EPA-450/3-81-005b

Control Techniques for Particulate Emissions from Stationary Sources — Volume 2

Emission Standards and Engineering Division

U.S. ENVIRONMENTAL PROTECTION AGENCY
Office of Air, Noise, and Radiation
Office of Air Quality Planning and Standards
Research Triangle Park, North Carolina 27711

September 1982

For sale by the Superintendent of Documents, U.S. Government Printing Office, Washington, D.C. 20402

This report has been reviewed by the Emission Standards and Engineering Division of the Office of Air Quality Planning and Standards, EPA, and approved for publication. Mention of trade names or commercial products is not intended to constitute endorsement or recommendation for use. Copies of this report are for sale by the Superintendent of Documents, U.S. Government Printing Office, Washington, D.C. 20402, and the National Technical Information Services, 5285 Port Royal Road, Springfield, Virginia 22161.

SUMMARY TABLE OF CONTENTS

VOLUME 1

Section		Page
1.	INTRODUCTION	1-1
2.	BACKGROUND	2-1
	2.1 Trends and Projections in Particulate Emissions	2-1
	2.2 Sources of Suspended Particulate Matter	2-3
	2.3 Various Approaches to Limiting Particulate Emissions	2-11
3.	ALTERNATIVE PARTICULATE CONTROL APPROACHES	3-1
	3.1 Energy Source and Fuel Selection	3-1
	3.2 Process Optimization	3-3
	3.3 Exhaust Gas Cleaning	3-5
4.	PARTICULATE CONTROL SYSTEMS	4-1
	4.1 Selection and Application of Particulate Control Systems	4.1-1
	4.2 Mechanical Collectors	4.2-1
	4.3 Electrostatic Precipitators	4.3-1
	4.4 Fabric Filter	4.4-1
	4.5 Wet Scrubbers	4.5-1
	4.6 Incinerators	4.6-1
5.	FUGITIVE EMISSION CONTROL	5-1
	5.1 Sources of Fugitive Emissions	5-1
	5.2 Control of Industrial Process Fugitive Emissions	5-2
	5.3 Control of Fugitive Dust	5-16
6.	ENERGY AND ENVIRONMENTAL CONSIDERATIONS	6-1
	6.1 Energy Requirements	6-1
	6.2 Secondary Pollutant Generation	6-14
	6.3 Liquid Waste Management	6-15
	6.4 Solid Waste Management	6-21
	6.5 Noise Management	6-25
	6.6 Radiation Control	6-25
7.	COSTS OF PARTICULATE CONTROL EQUIPMENT AND FUGITIVE EMISSION CONTROL TECHNIQUES	7-1
	7.1 Particulate Control Equipment Cost Analysis	7-2
	7.2 Methodology for Analyzing Cost of Particulate Control Systems	7-5
	7.3 Cost Curves for Various Particulate Control Systems	7-10
	7.4 Cost of Fugitive Emission Control	7-28

SUMMARY TABLE OF CONTENTS (Continued)

Section		Page
8.	EMERGING TECHNOLOGIES	8-1
8.1	Advanced Scrubbing Techniques	8-1
8.2	Advanced Electrostatic Precipitation Techniques	8-15
8.3	Advanced Filtration Techniques	8-28
8.4	High Gradient Magnetic Separation	8-34
8.5	Agglomeration Techniques	8-38

TABLE OF CONTENTS

VOLUME 2

Section		Page
	LIST OF FIGURES	vi
	LIST OF TABLES	xii
	CONVERSION FACTORS	xxii
	TABLE OF SYMBOLS	xxiii
	SUMMARY TABLE OF CONTENTS - VOLUME 1	xxvi
9.	SOURCES OF PARTICULATE EMISSIONS AND CONTROL TECHNIQUES	9.0-1
9.1	Stationary Source Selection	9.1-1
9.2	Stationary Combustion Sources	9.2-1
9.2.1	Pulverized Coal-Fired Boilers	9.2-1
9.2.2	Stoker Fed Coal-Fired Boilers	9.2-12
9.2.3	Coal-Fired Cyclone Furnaces	9.2-19
9.2.4	Nonfossil Fuel-Fired Boilers	9.2-21
9.2.5	Oil-Fired Utility Boilers	9.2-45
9.2.6	Oil-Fired Industrial/Commercial Boilers	9.2-49
9.3	Refuse Incinerators	9.3-1
9.3.1	Municipal Incinerators	9.3-1
9.3.2	Industrial and Commercial Incinerators	9.3-11
9.3.3	Sludge Incinerators	9.3-24
9.4	Open Burning	9.4-1
9.4.1	Agricultural Burning	9.4-1
9.4.2	Prescribed Burning	9.4-5
9.5	Chemical Process Industry	9.5-1
9.5.1	Charcoal Plants	9.5-1
9.5.2	Carbon Black (Furnace Process)	9.5-3
9.5.3	Detergent Manufacturing Plants	9.5-6
9.5.4	Explosives Industry	9.5-8
9.5.5	Thermal Process Phosphoric Acid Manufacturing	9.5-9
9.5.6	Sulfuric Acid	9.5-12
9.5.7	Phthalic Anhydride	9.5-18
9.5.8	Hydrogen Fluoride (Hydrofluoric Acid)	9.5-21
9.5.9	Boron Compounds	9.5-23
9.5.10	Pesticide Manufacturing	9.5-27
9.5.11	Sodium Carbonate (Natural Process)	9.5-27
9.5.12	Potash	9.5-33

TABLE OF CONTENTS (Continued)

Section			Page
9.6	Food and Agricultural Industry		9.6-1
	9.6.1	Ammonium Nitrate Fertilizer	9.6-1
	9.6.2	Ammonium Sulfate Fertilizer	9.6-7
	9.6.3	Urea Fertilizer	9.6-12
	9.6.4	Diammonium Phosphate Fertilizer	9.6-15
	9.6.5	Grain Handling and Storage	9.6-16
	9.6.6	Grain Processing	9.6-20
	9.6.7	Alfalfa Dehydrating	9.6-25
	9.6.8	Cotton Ginning	9.6-27
	9.6.9	Starch Manufacture	9.6-32
	9.6.10	Vegetable Oil	9.6-34
9.7	Mineral Products		9.7-1
	9.7.1	Nonmetallic Mineral Processing	9.7-1
	9.7.2	Metallic Minerals Mining and Processing	9.7-25
	9.7.3	Brick and Related Clay Products	9.7-42
	9.7.4	Beneficated Clay Products Manufacturing	9.7-47
	9.7.5	Gypsum	9.7-51
	9.7.6	Lime	9.7-62
	9.7.7	Cement Manufacturing	9.7-71
	9.7.8	Concrete Batching	9.7-83
	9.7.9	Asphalt Concrete Plants	9.7-86
	9.7.10	Asphalt Roofing Plants	9.7-96
	9.7.11	Glass Manufacturing	9.7-105
	9.7.12	Fiberglass Manufacturing	9.7-128
	9.7.13	Mineral Wool	9.7-133
9.8	Metallurgical Industry		9.8-1
	9.8.1	Iron and Steel Plants	9.8-2
		9.8.1.1 Coke Ovens	9.8-2
		9.8.1.2 Sintering	9.8-27
		9.8.1.3 Blast Furnace	9.8-46
		9.8.1.4 Open Hearth Furnace	9.8-50
		9.8.1.5 Basic Oxygen Furnace	9.8-56
		8.8.1.6 Electric Arc Furnace	9.8-62
		9.8.1.7 Rolling, Shaping, and Finishing	9.8-67
		9.8.1.8 Scarfing	9.8-69
	9.8.2	Ferroalloy Production	9.8-79
	9.8.3	Gray Iron Foundries	9.8-92
		9.8.3.1 Cupola	9.8-92
		9.8.3.2 Electric Furnaces	9.8-94
	9.8.4	Steel Foundries	9.8-98
	9.8.5	Primary Aluminum	9.8-103
	9.8.6	Primary Copper Smelters	9.8-119
	9.8.7	Primary Lead Smelting	9.8-138
	9.8.8	Primary Zinc Smelting	9.8-150
	9.8.9	Secondary Aluminum Operations	9.8-163
	9.8.10	Secondary Copper Smelting and Alloying	9.8-171

TABLE OF CONTENTS (Continued)

Section		Page
9.8.11	Secondary Lead Smelting	9.8-183
9.8.12	Secondary Zinc Processing	9.8-192
9.9	Petroleum Industry	9.9-1
9.9.1	Catalyst Regeneration Processes	9.9-1
9.9.2	Coking Processes, Emissions, and Control Techniques	9.9-7
9.9.3	Air Blowing Operations, Emissions and Control Techniques	9.9-9
9.9.4	Sludge Incineration, Emissions, and Control Technique	9.9-9
9.9.5	Process Heater, Boiler, and Flare Emissions and Control Techniques	9.9-10
9.10	Forest Products Industry	9.10-1
9.10.1	Kraft Pulping	9.10-1
9.10.2	Sulfite Pulping	9.10-16
9.10.3	Plywood Manufacture	9.10-21
9.11	Lead-Acid Battery Manufacturing	9.11-1
9.11.1	Storage Battery Manufacturing Processes and Particulate Emissions	9.11-1
9.11.2	Control Techniques	9.11-6
9.11.3	Secondary Environmental Impacts	9.11-12
9.12	Fugitive Dust Sources	9.12-1
9.12.1	Agricultural Sources	9.12-1
9.12.2	Transportation Sources	9.12-6
9.12.3	Aggregate Storage Piles and Waste Disposal Heaps	9.12-18
9.12.4	Construction	9.12-25
GLOSSARY		G.1-1

LIST OF FIGURES

Figure		Page
9.2.1	Pulverized Coal-Fired Boiler with Burners Mounted in Front Wall	9.2.2
9.2-2	Flyash Generation from Coal-Fired Boilers	9.2-11
9.2-3	Traveling Grate Spreader-Stoker with Front Ash Discharge	9.2-13
9.2-4	Single-Retort, Horizontal-Feed, Side Ash Discharge Underfeed Stoker	9.2-14
9.2-5	Chain Grate Overfeed Stoker	9.2-15
9.2-6	Cyclone Furnace Side View	9.2-20
9.2-7	Size Distribution of MSW Flyash	9.2-25
9.2-8	Size Distribution of MSW Flyash from a Controlled Air Boiler	9.2-27
9.2-9	Flyash Size Distribution for a Typical RDF/Coal Cofired Boiler	9.2-30
9.2-10	Size Distribution of Wood Flyash	9.2-32
9.2-11	Dutch Oven Furnace and Boiler	9.2-33
9.2-12	Small Spreader-Stoker Furnace	9.2-34
9.2-13	Typical Relationships Between Cyclone Collection Efficiency and Particle Diameter for Large and Small Tubes (Same Inlet Velocity)	9.2-38
9.2-14	Variations of Single Cyclone Collection Efficiency with Gas Flow Velocity	9.2-39
9.2-15	Electrical Resistivity of Flyash from Three Different U.S. Municipal Incinerators	9.2-42
9.2-16	Schematic of Integral Cyclone Gravel Bed Filter	9.2-43
9.2-17	Oil-Fired Cast Iron Boiler	9.2-50
9.4-1	Annual Forest Fire Particulate Production by Region and Season	9.4-6
9.5-1	Charcoal Briquetting Flow Diagram	9.5-2

LIST OF FIGURES (continued)

Figure		Page
9.5-2	Carbon Black Process	9.5-5
9.5-3	Detergent Spray-Drying with Tower Equipped for Either Cocurrent or Countercurrent Operation - Dampers in Countercurrent Mode of Operation	9.5-7
9.5-4	TNT Production by Batch Process	9.5-10
9.5-5	Flow Diagram for Typical Thermal-Process Phosphoric Acid Plant	9.5-11
9.5-6	Contact-Process Sulfuric Acid Plant Burning Elemental Sulfur	9.5-16
9.5-7	Badger-Sherwin-Williams Process for Manufacture of Phthalic Anhydride from Naphthalene	9.5-19
9.5-8	BASF Process for Manufacture of Phthalic Anhydride from O-xylene	9.5-20
9.5-9	Schematic Flow Diagram for the Manufacture of Hydrogen Fluoride	9.5-22
9.5-10	Procedures for Recovering Borax--Trona Processes	9.5-24
9.5-11	Boric Acid from Borax by Acidulation	9.5-25
9.5-12	Direct Carbonation Process	9.5-35
9.5-13	Sesquicarbonate Process	9.5-36
9.5-14	Monohydrate Process	9.5-37
9.5-15	Simplified Flow Sheet for Production of Muriate of Potash from Sylvite Ore	9.5-42
9.5-16	Simplified Flow Diagram for Production of Langbeinite, (K-Mg-S)	9.5-43
9.5-17	Simplified Flow Diagram for Production of Sulfate of Potash	9.5-44
9.6-1	Flow Diagram of Ammonium Nitrate Production	9.6-3
9.6-2	Flow Diagram for Ammonium Sulfate Processes	9.6-8
9.6-3	Uncontrolled Ammonium Sulfate Dryer Emissions-Particle Size Distribution	9.6-10

LIST OF FIGURES (continued)

Figure		Page
9.6-4	Diammonium Phosphate Production	9.6-17
9.6-5	Generalized Flow Diagram for Alfalfa Dehydration Plant	9.6-26
9.6-6	Typical Ginning Operation	9.6-29
9.6-7	Corn Wet Milling Flow Diagram	9.6-35
9.6-8	Schematic of a 1,000 Ton Per Day Soybean Processing Plant	9.6-43
9.7-1	Flowsheet of a Typical Crushing Plant	9.7-5
9.7-2	General Schematic for Nonmetallic Minerals Processing	9.7-6
9.7-3	Summary of Visible Emission Measurements from Best Controlled Fugitive Primary Crushing Source (Portable-Facility T) by Means of Wet Supression (According to EPA Method 9)	9.7-13
9.7-4	Summary of Visible Emission Measurements from Best Controlled Fugitive Secondary Crushing Source (Portable-Facility R) by Means of Wet Supression (According to EPA Method 9)	9.7-14
9.7-5	Summary of Visible Emission Measurements from Best Controlled Fugitive Secondary Crusher (Small, Stationary-Facility S) by Means of Wet Supression (According to EPA Method 9)	9.7-15
9.7-6	Summary of Visible Emission Measurements from Best Controlled Fugitive Primary Crushing Source (Stationary-Facility S) by Means of Wet Supression (According to EPA Method 9)	9.7-16
9.7-7	Summary of Visible Emission Measurements from Best Controlled Fugitive Secondary Crushing Source (Large, Secondary-Facility S) by Means of Wet Supression (According to EPA Method 9)	9.7-17
9.7-8	Particulate Emissions from Nonmetallic Minerals Processing Operations	9.7-21
9.7-9	Scope of Mining Activities	9.7-32
9.7-10	General Schematic for Initial Steps in Ore Processing	9.7-34
9.7-11	Beneficiation Processes	9.7-35

LIST OF FIGURES (continued)

Figure		Page
9.7-12	Common Brick Manufacturing Using the Continuous Stiff-Mud Process	9.7-43
9.7-13	Particle Size Distribution for Emissions from a Brick Kiln and Dryer	9.7-46
9.7-14	Ceramic Clay Manufacturing Processes	9.7-49
9.7-15	Flow Diagram, Kiln-Fired Refactories Manufacturing	9.7-50
9.7-16	Gypsum Products Process Flow Diagram	9.7-53
9.7-17	Generalized Lime Manufacturing Plant	9.7-63
9.7-18	Basic Flow Diagram of Portland Cement Manufacturing Process	9.7-73
9.7-19	Process Flow Diagram for Concrete Batching Showing Potential Industrial Process Fugitive Particulate Emission Points	9.7-85
9.7-20	Material Flow for Representative 159-Mg/hr Asphalt Concrete Plant	9.7-89
9.7-21	Particle Size Distribution in Uncontrolled Saturator Exhaust	9.7-97
9.7-22	Schematic Diagram of Vertical Asphalt Blowing Still	9.7-99
9.7-23	Schematic Diagram of Asphalt Roofing Line	9.7-101
9.7-24	Typical Flow Diagram for the Manufacture of Soda-Lime Glass	9.7-110
9.7-25	Regenerative Side Port Glass-Melting Furnace	9.7-111
9.7-26	Log-Probability Distribution of Particle Sizes Present in Glass Furnace Effluent	9.7-116
9.7-27	Typical Flow Diagram of Textile-Type Glass Fiber Production Process	9.7-131
9.7-28	Typical Flow Diagram of Wool-Type Glass Fiber Production Process	9.7-131
9.7-29	Flow Diagram of Mineral Wool Processing	9.7-135
9.8.1-1	A Composite Flow Diagram for a Steel Plant	9.8-3

LIST OF FIGURES (continued)

Figure		Page
9.8.1-2	Flow Sheet Showing the Major Steps Involved in the Carbonization of Coal Using the By-Product Process and the Subsequent Recovery of Coal Chemicals from the Gases Generated at the Ovens	9.8-7
9.8.1-3	Schematic Diagram of a Coke Battery	9.8-8
9.8.1-4	Schematic Diagram of Three Common Flue Designs	9.8-10
9.8.1-5	A Typical Aspiration System Operating in the Return Bend of the Gas-Collection Duct	9.8-15
9.8.1-6	Scrubber Efficiency Vs. Coal Feedrate Particulate Data	9.8-29
9.8.1-7	Particle Sizing from Inlets of Windbox Secondary Control Devices	9.8-32
9.8.1-8	Particle Sizing from Windbox Secondary Control Outlets of Sampled Facilities	9.8-36
9.8.1-9	Particle Sizing from Baghouse Outlet Controlling Sinter Processing Emissions at a Sintering Plant	9.8-45
9.8.1-10	Typical Blast Furnace	9.8-47
9.8.1-11	The Relationship Between Clean-Gas Dust Loading and Pressure Drop Across Venturi Scrubber	9.8-51
9.8.1-12	Cross-Section of a Basic Open Hearth Furnace	9.8-53
9.8.1-13	Relationship of Electrostatic Precipitator Collecting Surface to Collection Efficiency for Open Hearth Emissions	9.8-57
9.8.1-14	Relationship Between Clean-Gas Dust Loading and Pressure Drop for a Wet Scrubber on an Open Hearth Furnace	9.8-58
9.8.1-15	Basic Oxygen Furnace	9.8-60
9.8.1-16	Direct-Arc Electric Furnace	9.8-64
9.8.1-17	Ventilation Systems for Electric Arc Furnaces	9.8-68
9.8.2-1	Submerged Arc Furnace for Ferroalloy Production	9.8-80
9.8.2-2	Open Furnace Controlled by a Venturi Scrubber	9.8-81
9.8.2-3	Sealed Furnace Controlled by Venturi Scrubber	9.8-82

LIST OF FIGURES (continued)

Figure		Page
9.8.3-1	Conventional Lined Cupola	9.8-93
9.8.5-1	Schematic Diagram of Primary Aluminum Production Process	9.8-104
9.8.5-2	Aluminum Reduction Cell	9.8-105
9.8.5-3	Average Composite Particle Size Distribution by Weight for Reduction Cell Facility Roof Ventilator Emissions	9.8-111
9.8.5-4	Schematic Layout of Alcoa 398 Process Reactor	9.8-115
9.8.6-1	Typical Primary Copper Smelter Flowsheet	9.8-121
9.8.6-2	Reverberatory Flue System Particulate Size Distribution	9.8-126
9.8.6-3	Average Cumulative Inlet and Outlet Mass Loading vs. Particle Size, Copper Reverberatory Furnace	9.8-127
9.8.6-4	Converter Flue System Particulate Size Distribution	9.8-128
9.8.7-1	Primary Lead Smelting Process	9.8-139
9.8.7-2	Lead Blast Furnace	9.8-141
9.8.8-1	Primary Pyrometallurgical Zinc Smelting Process	9.8-155
9.8.8-2	Primary Electrolytic Zinc Smelting Process	9.8-156
9.8.10-1	Raw Material and Product Flow Diagram for the Secondary Copper Industry	9.8-173
9.8.10-2	Air Pollution Control System in the Brass and Bronze Industry	9.8-176
9.8.11-1	Secondary Lead Smelter Process	9.8-184
9.8.11-2	Control Schemes for Secondary Lead (a) Blast and (b) Reverberatory Furnaces	9.8-187
9.8.11-3	Controlled Lead Pot and Ventilation System, Baghouse	9.8-189
9.8.12-1	Diagram Showing One Bank of a Belgium Retort Furnace	9.8-195
9.8.12-2	Diagram of a Distillation-Type Retort Furnace	9.8-196
9.8.12-3	Diagram of a Muffle Furnace and Condenser	9.8-197

LIST OF FIGURES (continued)

Figure		Page
9.9-1	Plan of a Complex Refinery	9.9-2
9.9-2	Fluid Catalytic Cracking Process	9.9-5
9.9-3	Flow Diagram of Modern Fluid Coking unit	9.9-8
9.10-1	Typical Kraft Sulfate Pulping and Recovery Process	9.10-2
9.10-2	Indirect-Contact Recovery Furnace System	9.10-4
9.10-3	Particulate Concentrations in Control Systems Exhaust from Kraft Recovery Furnaces	9.10-13
9.10-4	Particulate Emissions in Control System Exhaust from Smelt Dissolving Tanks used in the Kraft Pulping Industry	9.10-14
9.10-5	Particulate Concentrations in Control System Exhaust from Lime Kilns Used in the Kraft Pulping Industry	9.10-15
9.10-6	Simplified Process Flow Diagram of Magnesium-Base Sulfate Pulp Process Employing Chemical and Heat Recovery	9.10-19
9.10-7	Plywood Plant Process Diagram	9.10-23
9.11-1	Process Flow Diagram Showing Uncontrolled Lead Emission Factors for Lead-Acid Battery Manufacture	9.11-3
9.12-1	Diagram of Street Surface/Atmospheric Exchange of Particulate Matter	9.12-10

LIST OF TABLES

Table		Page
9.2-1	Selected Stack Parameters for Pulverized Coal-Fired Utility and Industrial Boilers	9.2-3
9.2-2	Analyses of Flyash (FA) and Bottom Ash (BA) from Utility Plants	9.2.5
9.2-3	Design Parameters for Particulate Control Equipment Applied to Pulverized Coal-Fired Boilers	9.2-7
9.2-4	Size Specific Emissions from Pulverized Coal-Fired Boilers	9.2-9
9.2-5	Stack Parameters for Typical Stoker Coal-Fired Boilers	9.2-17
9.2-6	Ultimate Analysis of a Typical General Solid Waste	9.2-22
9.2-7	Uncontrolled Emissions from a Typical Large 525 GJ/Hr (500 X 10^6 Btu/Hr) Heat Input MSW-Fired Boiler	9.2-24
9.2-8	Uncontrolled Particulate Emissions from MSW-Fired Boiler	9.2-26
9.2-9	Typical Characteristics of Refuse-Derived Fuels	9.2-28
9.2-10	Ultimate Analysis of Moisture-Free Wood-Waste Fuel	9.2-31
9.2-11	Average Stack Parameters for Typical Wood/Bark-Fired Boilers	9.2-35
9.2-12	Key Considerations of Particulate Emission Control Devices for Wood-Fired Boilers	9.2-37
9.2-13	Efficiency of Granular Bed Filters in Series with Cyclones on Hogged Fuel Boilers	9.2-44
9.2-14	Selected Stack Parameters of Oil-Fired Utility and Industrial Boilers	9.2-47
9.2-15	Selected Stack Parameters for Typical Oil-Fired Industrial/Commercial Boilers	9.2-51
9.3-1	Summary of Particulate Emission Test Data from Incinerators	9.3-2
9.3-2	Municipal Incinerator Stack Parameter Data	9.3-5
9.3-3	Typical Electrostatic Precipitator Design Parameters for Incinerator Applications	9.3-8

LIST OF TABLES (Continued)

Table		Page
9.3-4	Operating and Design Parameters for Fabric Filter Baghouse on Municipal Incinerator	9.3-10
9.3-5	Industrial and Commercial Incinerator Types	9.3-12
9.3-6	Industrial and Commercial Incinerator Stack Parameter Data	9.3-19
9.3-7	Summary of Emission Test Data from Incinerators Burning Wire Insulation, SI Units (English Units)	9.3-20
9.3-8	Summary of Uncontrolled Emission Test Data from Electric Motor Incinerator, SI.Units (English Units)	9.3-21
9.3-9	Governmental, Commercial, and Industrial Sludge Incinerator Stack Parameter Data	9.3-26
9.4-1	Summary of 1973 State and Nationwide Agricultural Open Burning Data	9.4-2
9.5-1	Typical Thermal Process Phosphoric Acid Stack Parameters	9.5-13
9.5-2	Emission and Operating Data for Thermal Process Phosphoric Acid Plants	9.5-14
9.5-3	Particle Size Distributions in Selected Sulfuric Acid Plant Absorber Effluents	9.5-17
9.5-4	Typical Applications Air Pollution Control Equipment	9.5-26
9.5-5	Size Specific Emissions from a Borax Fusing Furnace	9.5-28
9.5-6	U.S. Production of Synthetic Organic Pesticides, by Usage Category, in 1974	9.5-29
9.5-7	Principal Inorganic Pesticide Formulations	9.5-30
9.5-8	Summary of Principal Air Emissions	9.5-31
9.5-9	Summary of Air Emission Control for Five Major Pesticides	9.5-32
9.5-10	Sodium Carbonate Natural Processes	9.5-34
9.5-11	Typical Particulate Emission Sources and Controls for a Monohydrate Process Plant	9.5-38
9.5-12	Emission Sources and Control Equipment for the Sesquicarbonate Process	9.5-39

LIST OF TABLES (Continued)

Table		Page
9.5-13	Emission Sources and Control Equipment for the Direct Carbonation Process	9.5-40
9.5-14	U.S. Potash Producers	9.5-41
9.5-15	Particle Size Distribution During Muriate Production	9.5-45
9.5-16	Size Specific Emissions from Potash and Salt Dryers	9.5-47
9.6-1	Summary of Neutralization Emission Data	9.6-4
9.6-2	Emission Test Results for Controlled Dryers in Ammonium Sulfate Manufacturing Plants	9.6-11
9.6-3	Diammonium Phosphate Production Stack Parameter Data	9.6-18
9.6-4	Grain Handling Operations Emission Factors	9.6-21
9.6-5	Feed and Grain Elevators Stack Parameter Data	9.6-22
9.6-6	Calculated Energy Requirements to Operate Alternate Grain Elevator Control Systems	9.6-23
9.6-7	Particulate Control Devices Applicable to Cotton Ginning Operations	9.6-31
9.6-8	Cotton Ginning Stack Parameter Data	9.6-33
9.6-9	Emission Factors for Starch Manufacturing	9.6-36
9.6-10	Starch Manufacturing Stack Parameter Data	9.6-37
9.7-1	Nonmetallic Minerals Production Statistics	9.7-2
9.7-2	1977 Nationwide Particulate Emissions from the Nonmetallic Minerals Mining and Processing Industry	9.7-3
9.7-3	Nonmetallic Mineral Unit Operations and Possible Sources of Emissions	9.7-7
9.7-4	Particulate Emission Sources for the Extraction and Processing of Nonmetallic Minerals	9.7-9
9.7-5	Summary of Visible Emission Measurements from Fugitive Noncrushing Sources Controlled by Wet Suppression (According to EPA Method 22)	9.7-12
9.7-6	Air-to-Cloth Ratios for Fabric Filters Used for Exhaust Emission Control	9.7-19

LIST OF TABLES (Continued)

Table		Page
9.7-7	Baghouse Units Tested by EPA	9.7-20
9.7-8	Summary of Visible Emission Measurements from Fugitive Sources at Non-Metallic Mineral Plants	9.7-23
9.7-9	Energy Requirements for Model Nonmetallic Minerals Plants Having Crushing and Grinding Operations	9.7-26
9.7-10	Energy Requirements for Model Nonmetallic Minerals Plants Having Crushing Operations Only	9.7-27
9.7-11	Types of Emissions Generated by Metal Ore Processing Operations	9.7-28
9.7-12	Methods of Particulate Emission Control Used at Metallic Mineral Processing Plants	9.7-29
9.7-13	Metallic Minerals Processing Industry Characteristics	9.7-31
9.7-14	Particulate Emission Sources and Control Options for the Processing of Metallic Minerals	9.7-39
9.7-15	Particulate Concentrations and Particle Size Data for Metallic Minerals Processes	9.7-41
9.7-16	Uncontrolled Particulate Emissions from a Brick Kiln Dryer	9.7-45
9.7-17	Ore Drying Emissions Reported in a Permit Application	9.7-55
9.7-18	Dry Mining Emissions	9.7-58
9.7-19	Scoring and Chamfering Emissions Data	9.7-59
9.7-20	End Sawing Emissions Measured in Source Testing	9.7-61
9.7-21	Composition of Particulate Matter from Natural Gas Fired Lime Kilns	9.7-66
9.7-22	Lime Production Emission Size Distributions	9.7-66
9.7-23	Control Technologies Applicable to Emission Sources in the Lime Industry	9.7-67
9.7-24	Rotary Lime Kiln Emissions	9.7-68
9.7-25	Lime Hydrator Emissions	9.7-70

LIST OF TABLES (Continued)

Table		Page
9.7-26	Energy Consumption and Solid Waste Production Factors for Control Devices Applied to Rotary Lime Kilns	9.7-72
9.7-27	Size Specific Emissions from A Wet Cement Kiln	9.7-75
9.7-28	Sources of Air Emissions in Cement Manufacturing Plants	9.7-76
9.7-29	Size Distribution of Dust Emitted from Kiln Operations Without Controls	9.7-77
9.7-30	Distribution of Kiln Dust Collection Systems in Wet and Dry Process Cement Plants	9.7-79
9.7-31	Analysis of Portland Cement Plant Compliance Test Data	9.7-80
9.7-32	Advantages/Disadvantages of Control Devices for Various Cement Manufacturing Operations	9.7-82
9.7-33	Emission Source Controls	9.7-87
9.7-34	Asphalt Concrete Plant Exhaust Gas and Stack Characteristics for the Rotary Dryer	9.7-90
9.7-35	Size Specific Emissions from A Rotary Dryer Asphalt Batching Plant	9.7-91
9.7-36	Primary and Secondary Control Devices Used in the Asphalt Hot Mix Industry	9.7-93
9.7-37	Hot Mix Asphalt Concrete Plants	9.7-94
9.7-38	Control Equipment Used on Asphalt Saturators	9.7-102
9.7-39	EPA Test Data at Asphalt Roofing Plants	9.7-103
9.7-40	Summary of Fugitive Emissions Data from Capture Systems	9.7-106
9.7-41	1976 Production Rates and Values of Shipments	9.7-109
9.7-42	Emissions from Uncontrolled Glass Melting Furnaces for Each Industry Category	9.7-114
9.7-43	Standards of Performance for Gas-Fired Glass Melting Furnaces	9.7-117
9.7-44	All Electric Glass Melting Furnace Particulate Emissions Tests	9.7-119

LIST OF TABLES (Continuted)

Table		Page
9.7-45	Particulate Emissions Test Results for Glass Melting Furnaces Equipped with Fabric Filters	9.7-121
9.7-46	Particulate Emission Test Results for Glass Melting Furnaces Equipped with Venturi Scrubbers	9.7-123
9.7-47	Particulate Emission Test Results for Glass Melting Furnaces Equipped with Electrostatic Precipitators	9.7-125
9.7-48	Representative Particulate Emissions from Glass Melting Furnaces	9.7-127
9.7-49	Glass Type, Composition, Properties and Usages	9.7-129
9.7-50	Mineral Wool Industry Emission Sources and Selected Controls	9.7-137
9.8.1-1	Coke and Coal Chemicals Produced by U.S. Coke Plants in 1978	9.8-4
9.8.1-2	Stack Parameters for Byproduct Metallurgical Coke Manufacturing Emission Sources	9.8-12
9.8.1-3	Size Specific Emissions from Coke Pushing	9.8-13
9.8.1-4	Comparison of Electrostatic Precipitator Installations	9.8-19
9.8.1-5	Performance Data for Electrostatic Precipitator Control of Coke Oven Battery Stack Particulate Emissions	9.8-20
9.8.1-6	Summary of Test Results on Fabric Filters at Kaiser Steel	9.8-22
9.8.1-7	Data on Uncontrolled Particulate Emissions from Pushing	9.8-25
9.8.1-8	Particulate Emissions and Size Distribution from Coke Pushing	9.8-28
9.8.1-9	Stack Parameters for Sintering Operations	9.8-31
9.8.1-10	Average Dry ESP Design Performance Parameters for Collecting Sinter Machine Windbox Exhaust Emissions	9.8-34
9.8.1-11	Baghouse Operating Parameters for Collecting Sinter Machine Windbox Exhaust Emissions	9.8-40
9.8.1-12	Average Scrubber Design Performance Parameters for Collecting Sinter Machine Windbox Exhaust Emissions	9.8-42

LIST OF TABLES (Continued)

Table		Page
9.8.1-13	Stack Parameters for Blast Furnace Iron Production Operations	9.8-48
9.8.1-14	Size Analysis of Flue Dust U.S. Blast Furnaces	9.8-49
9.8.1-15	Chemical Composition by Dry, Blast-Furnace Flue Dust	9.8-49
9.8.1-16	Stack Parameters for Open Hearth Steel Production Furnaces	9.8-54
9.8.1-17	Size Specific Emissions from Open Hearth Steel Production	9.8-55
9.8.1-18	Stack Parameters for Basic Oxygen Steel Production Furnaces	9.8-61
9.8.1-19	Stack Parameters for Electric Arc Steel Production Furnaces	9.8-65
9.8.1-20	Typical Chemical Analysis of Electric Arc Furnace Fume	9.8-66
9.8.1-21	Stack Parameters for Steel Production Finishing Operations	9.8-70
9.8.1-22	Stack Parameters for Scarfing	9.8-71
9.8.2-1	Stack Parameters for Ferroalloy Production	9.8-83
9.8.2-2	Emission Factors for Ferroalloy Production in Electric Smelting Furnaces	9.8-85
9.8.2-3	Particle Size Distribution of Particulates from Ferroalloy	9.8-86
9.8.2-4	Standards of Performance for New Sources Ferroalloy Production Facilities	9.8-87
9.8.2-5	Performance of Particulate Controls on Ferroalloy Furnaces	9.8-90
9.8.3-1	Size Specific Emissions from a Gray Iron Cupola	9.8-95
9.8.4-1	Particle-Size Distribution for Particulate Emissions from Three Electric Arc Furnace Installations Melting Gray Iron	9.8-99
9.8.5-1	Results of EPA Source Tests for Particulates from Primary Aluminum Reduction Cells and Anode Bake Plant	9.8-107

LIST OF TABLES (Continued)

Table		Page
9.8.5-2	Representative Particle Size Distributions of Uncontrolled Emissions from Prebaked and Horizontal Stud Soderberg Cells	9.8-108
9.8.5-3	Atmospheric Pollutants from Secondary Sources in Aluminum Plants	9.8-109
9.8.5-4	Industrial Process Fugitive Emission Sources and Contaminants	9.8-110
9.8.5-5	Aluminum Ore Electroreduction Stack Parameter Data	9.8-113
9.8.5-6	Air Pollution Controls for Primary Aluminum Reduction Potline Emissions	9.8-114
9.9.5-7	Summary of In-Plant Energy Consumption per Ton of Aluminum for Pollution Control by Plant Type (kilowatt-hours/ton)	9.8-117
9.8.6-1	Emission Factors for Primary Copper Smelters	9.8-125
9.8.6-2	Reverberatory Furnace ESP Performance Data	9.8-131
9.8.6-3	Performance Data for Spray Chamber/ESP	9.8-134
9.8.6-4	Performance Data for Spray Chamber/Baghouse	9.8-135
9.8.7-1	Emission Factors for Primary Lead Smelting Processes Without Controls	9.8-142
9.8.7-2	Sintering Machine Flue Dust Size Distribution	9.8-143
9.8.7-3	Concentrations of Lead, Cadmium, and Zinc in Fugitive Particulate Emissions of Various Primary Lead Smelting Operations' Emissions Sources	9.8-145
9.8.7-4	Primary Lead Smelters--Sintering Machine Baghouse Test Data	9.8-146
9.8.7-5	Lead Smelters--Blast Furnace Baghouse Test Data	9.8-147
9.8.8-1	Domestic Slab Zinc Capacity 1968-1972	9.8-151
9.8.8-2	Domestic Slab Zinc Consumption	9.8-152
9.8.8-3	Supply of Slab Zinc by Source	9.8-153
9.8.8-4	Emission Factors for Primary Zinc Smelting Without Controls	9.8-157

LIST OF TABLES (Continued)

Table		Page
9.8.8-5	Typical Zinc Roasting Operations	9.8-158
9.8.8-6	Components of the Dust from Multiple-Hearth, Suspension, and Fluidized-Bed Roasters	9.8-159
9.8.9-1	Primary Air Emission Sources and Pollutants for Secondary Aluminum Manufacturing Operations	9.8-164
9.8.9-2	Scrubber Collection Efficiency for Emissions from Aluminum Chlorine Fluxing	9.8-168
9.8.10-1	Composition of Particulate Matter Collected from a Secondary Brass and Bronze Smelter	9.8-174
9.8.10-2	Summary of Air Pollution Control Equipment in Use in the Secondary Copper Industry	9.8-177
9.8.10-3	Secondary Copper Industry Stack Parameter Data	9.8-178
9.8.10-4	Operating Specifications and Uncontrolled and Controlled Emission Rates for the Typical Secondary Copper Smelting and Refining Plant	9.8-179
9.8.10-5	Summary of Available Emission Data by Plant and Emission Source	9.8-181
9.8.11-1	Stack Parameters for Emission Sources Within the Lead Smelting Industry	9.8-190
9.8.12-1	Stack Parameters for Emission Sources Within the Secondary Zinc Processing Industry	9.8-198
9.8.12-2	Zinc Sweating Furnace Control Information	9.8-199
9.9-1	Petroleum Industry Emission Sources and Controls	9.9-3
9.9-2	Petroleum Industry Stack Parameters	9.9-4
9.10-1	Particulate Property Values from Conventional and Low-Odor Recovery Processes	9.10-6
9.10-2	Typical Particle Size Distribution for Indirect-Contact Recovery Boiler	9.10-7
9.10-3	Typical Indirect-Contact Kraft Recovery Boiler Electrostatic Precipitator System Design Parameters	9.10-8
9.10-4	Operating Characteristics of Particulate Liquid Scrubbers on Kraft Lime Kilns	9.10-10

LIST OF TABLES (Continued)

Table		Page
9.10-5	Estimated Impact of Kraft Pulp Mill Particulate Matter Emissions Under Non-Downwash Assumption	9.10-11
9.10-6	Energy Impacts of Control Techniques for Kraft Pulp Mills	9.10-17
9.10-7	Emission Factors for Sulfite Pulping	9.10-20
9.10-8	Stack Parameters for a Typical Sulfite Pulp Mill	9.10-22
9.11-1	1975 Nationwide Emissions of Lead from the Manufacture of Lead-Acid Storage Batteries	9.11-2
9.11-2	Particulate Control Devices Used in the Lead-Acid Battery Manufacturing Industry	9-11-7
9.11-3	Selected Control Alternatives for Lead-Acid Battery Manufacturing Industry	9.11-9
9.11-4	Summary of Alternative Control Systems Costs and Control Effectiveness for Lead-Acid Battery Plants	9.11-10
9.12-1	Particle Size Distribution of the Dust Emissions from Agricultural Tilling	9.12-3
9.12-2	Fugitive Dust Control Methods for Agricultural Sources	9.12-4
9.12-3	Cost and Control Efficiencies for Fugitive Dust Control Techniques for Open Fields	9.12-7
9.12-4	Particle Size Distribution of the Dust Emissions from Paved Streets	9.12-11
9.12-5	Fugitive Dust Control Methods for Transportation Sources	9.12-13
9.12-6	Initial Cost and Maintenance Cost of Alternative Road Surfaces Applied by Maricopa County Highway Department	9.12-15
9.12-7	Effectiveness and Cost of Alternative Measures to Control Dust Emissions from Unpaved Parking Lots or Truck Stops	9.12-16
9.12-8	Particle Sizes of Fugitive Dust Emissions from Aggregate Storage Piles	9.12-19
9.12-9	Particle Size Distribution for Dust Emissions from Tailing Piles	9.12-21
9.12-10	Fugitive Dust Control Methods for Stockpiles and Waste Disposal Heaps	9.12-22

LIST OF TABLES (Continued)

Table		Page
9.12-11	Possible Control Technology Applications for Open Storage Piles	9.12-24
9.12-12	Effectiveness and Cost of Control Measures for Emissions from Tailings Piles	9.12-26
9.12-13	Fugitive Dust Control Methods for Construction Sources	9.12-28
9.12-14	Cost of Alternative Dust Control Measures for Construction Emissions in Phoenix Area	9.12-30

CONVERSION FACTORS

1 meter (m) = 3.281 ft

1 meter (m) = 3.937×10^{1} in.

1 meter^2 (m^2) = 1.076×10^{1} ft^2

1 meter^3 (m^3) = 1.308 yd^3

1 meter^3 (m^3) = 3.532×10^{1} ft^2

1 meter/second (m/s) = 196.8 ft/min

1 meter/second (m/s) = 3.281 ft/s

1 meter^3/second (m^3/s) = 2.119×10^{3} ft^3/min

1 meter^3/second (m^3/s) = 1.585×10^{5} gal (U.S. liquid)/min

1 meter^3/second (m^3/s) = 2.282×10^{7} gal (U.S. liquid)/day

1 kilogram (kg) = 2.205 lb

1 kilogram (kg) = 1.102×10^{-3} short tons (2000 lb)

1 kilogram/meter^3 (kg/m^3) = 1.284×10^{-2} lb/ft^3

1 kilogram/meter^3 (kg/m^3) = 8.98×10^{1} grains/ft^3

1 joule (J) = 9.479×10^{-4} Btu (mean)

1 joule (J) = 2.778×10^{-7} kWh

1 watt (W) = 1.340×10^{-3} hp

1 pascal (Pa) = 1.45×10^{-4} lb_f/in.^{2} (psi)

1 pascal (Pa) = 4.019×10^{-3} in. H_2O

1 pascal second (Pa-s) = 0.672 lb/ft^2-s

1 kilopascal (kPa) = 0.4019 in. H_2O

TABLE OF SYMBOLS

Symbol	Definition
a	cross-sectional area
A	collection plate area of an electrostatic precipitator
A_w	wetted surface area
C	Cunningham correction factor
c	dust loading
d	diameter
d_d	drop diameter
d_f	fiber diameter
d_p	aerodynamic particle diameter
D	gas diffusivity
D_p	particle diffusivity
E_c	charging field strength
E_p	precipitation field strength
g	acceleration of gravity
h	height
Hd	liquid hold-up
K_p	inertia parameter
K_{pt}	inertia parameter at throat velocity
K_2	resistance coefficient of dust cake
l	bed depth
n	number of plates or stages

Symbol	Definition
N_{RE}	Reynolds number
p	total pressure
p_s	static pressure
p_c	corona power
P_t	penetration
q	particle charge
Q_l	liquid throughput
Q_g	gas throughput
r_d	drop radius
r_h	radius of hole
T	absolute temperature
t	time
t_R	residence time
v_g	gas velocity
v_p	pickup velocity
α	solid fraction in fiber bed
Δ_{ps}	static pressure change
η	efficiency
μ	gas viscosity
μ_L	liquid viscosity
ρ_g	gas density
ρ_L	liquid density
ρ_p	particle density
ρ_B	bulk resistivity

Symbol	Definition
ρ_I	In-situ resistivity
ε	porosity
w_e	migration velocity

GLOSSARY

ABSORPTION.[1] Transfer of molecules from the bulk of the gas to a liquid surface followed by diffusion to the bulk of the liquid.

ADIABATIC SATURATION.[1] A process by means of which an air or gas stream is saturated with water vapor without adding or subtracting heat from the system.

AERODYNAMIC DIAMETER. The diameter of a unit density sphere having the same aerodynamic properties as an actual particle.

AEROSOL. A dispersion of solid or liquid particles of microscopic size.

AGGLOMERATION. The combination of smaller particles due to collisions.

AIR, DRY. Air containing no water vapor.

AIR-TO-CLOTH RATIO (A/C). The volumetric rate or capacity of a fabric filter; the volume of air (gas) cubic meter per minute, per square meter of filter medium (fabric).

ATOMIZATION. The reduction of liquid to a fine spray.

BACK CORONA. Localized electrical breakdown of a dust layer, producing positive ions, which degrade or neutralize the intended charging process.

BAROMETRIC SEAL.[1] A column of liquid used to hydraulically seal a scrubber, or any component thereof, from atmosphere or other part of the system.

BLAST GATE.[2] A sliding plate installed in a supply or exhaust duct at right angles to the duct for the purpose of regulating air flow.

BLINDING (BLINDED).[2] The loading, or accumulation, of filter cake to the point where capacity rate is diminished.

BURNER.[1] A device for the introduction of fuel and air into a furnace at the desired velocities, turbulence, and concentration to establish and maintain proper ignition and combustion of the fuel.

CASCADE IMPACTOR. A particle-sizing device in which progressively increasing inertial forces are used to separate progressively smaller particle sizes.

CHEVRON MIST ELIMINATOR.[1] Series of diagonal baffles installed in a gas stream, designed to separate fine droplets of liquid from the gas by means of inertial impaction on the surfaces of the baffles.

COCURRENT. Flow of scrubbing liquid in the same direction as the gas stream.

COLLECTION EFFICIENCY.[1] The ratio of the weight of pollutant collected to the total weight of pollutant entering the collector.

CONDENSATION.[1] The physical process of converting a substance from the gaseous phase to the liquid or solid phase via the removal of heat, the application of pressure, or both.

CONTACT CHARGING. Charging of particles by contacting them and then releasing them from a charged surface.

CORONA CURRENT. Measure of the current flow from the transformer to its electrical section in an electrostatic precipitator (ESP).

COUNT.[2] The number of warp yarns (ends) and filling yarns (picks) per inch. Also called thread count.

CROSSFLOW. Flow of scrubbing liquid normal to the gas stream.

CROWFOOT SATIN.[2] A 3/1 broken twill arranged 2 threads right, then 2 threads left. Also called 4 shaft satin, or broken crow weave.

CUNNINGHAM FACTOR. A correction factor to account for slippage of fine particles moving through a discontinuous gaseous medium.

CURRENT DENSITY. Corona current level per unit area of collection surface of an electrostatic precipitator (current per plate).

CYCLONE. A device in which the velocity of an inlet gas stream is transformed into a confined vortex from which inertial forces tend to drive particles to the wall.

DAMPER.[2] An adjustable plate installed in a duct to regulate gas flow.

DEHUMIDIFY.[1] Reduction of water vapor content of a gas stream.

DEMISTER. A mechanical device used to remove entrained water droplets from a scrubbed gas stream.

DENIER.[2] The number, in grams, of a quantity of yarn, measuring 9000 meters in length. Example: A 200-denier yarn measuring 9000 meters weighs 200 grams. A 200/80-yarn indicates a 200-denier yarn composed of 80 filaments. Usually used to describe continuous multifilament yarns of silk, rayon, Orlon, Dacron, Dynel, Nylon, and similar materials.

DENSITY.[2] The ratio of the mass of a specimen of a substance to the volume of the specimen. The mass of a unit volume of a substance.

DIELECTRIC STRENGTH. The maximum potential gradient that may exist in a material without the occurrence of electrical breakdown.

DIFFUSION (AEROSOL). Random motion of particles caused by repeated collisions of gas molecules.

DIFFUSION (LIQUID).[1] The spontaneous intermingling of miscible fluids placed in mutual contact, and accomplished without the aid of mechanical mixing.

DIFFUSION CHARGING. Process of transferring electrical charge to particles by random movement of electrons and ions; the effective charging mechanism for submicrometer-sized aerosols.

DIFFUSIOPHORESIS. Force acting on a particle, effecting movement due to a vapor condensation gradient, resultant of differences in molecular impacts on opposite sides of a particle.

DIMENSIONAL STABILITY.[2] Capability of fabric to retain finished length and width, under stress, in hot or moist atmosphere.

DRAFT.[1] A gas flow resulting from the pressure difference between the incinerator, or any component part, and the atmosphere, which moves the products of combustion from the incinerator to the atmosphere. (1) Natural draft: the negative pressure created by the difference in density between the hot flue gases and the atmosphere. (2) Induced draft: the negative pressure created by the vacuum action of a fan or blower between the incinerator and the stack. (3) Forced draft: the positive pressure created by the fan or blower, which supplies the primary or secondary air.

DRAG FORCE. Resistance of a viscous medium due to relative motion of a fluid and object.

DUST.[2] Solid particles less than 100 micrometers created by the attrition of larger particles.

DUST LOADING.[2] The weight of solid particulate suspended in an airstream (gas), usually expressed in terms of grains per cubic foot, grams per cubic meter, or pounds per thousand pounds of gas.

DUST PERMEABILITY.[2] The mass of dust (grains) per square foot of media divided by the resistance (pressure drop) in inches water gauge per unit of filtering velocity, feet per minute. Not to be compared with cloth permeability.

ELECTROSTATIC FIELD. The position-dependent electrostatic force per unit charge, made up of two components--one related to applied voltage and electrode geometry, the other related to space change due to the presence of electrons, ions, and charged particles.

ENTRAINMENT SEPARATOR (DEMISTER). That part of a gas scrubber designed to remove entrained liquid droplets from a gas stream by centrifugal action, by impingement on internal surfaces of the scrubber, or by a bed of packing, mesh, or baffles at or near the scrubber gas outlet.

ENTRY LOSS.[2] Loss in total pressure caused by air (gas) flowing into a duct or hood.

EXCESS AIR.[1] Air supplied for combustion in excess of that theoretically required for complete combustion; usually expressed as percentage of theoretical air (130% excess air).

FABRIC.[2] A planar structure produced by interlacing yarns, fibers, or filaments. (1) Knitted fabrics produced by interlooping strands of yarns, etc. (2) Woven fabrics are produced by interlacing strands at more or less right angles. (3) Bonded fabrics or a web of fibers held together with a cementing medium which does not form a continuous sheet of adhesive material. (4) Felted fabrics or structures built up by the interlacing action of the fibers themselves without spinning, weaving, or knitting.

FEEDSTOCK.[1] Starting material used in a process. Can be raw material or an intermediate product that will undergo additional processing.

FIELD CHARGING. Process of transferring electrical charge to particles induced by high electric field strengths in the interelectrode space; the effective charging mechanism for particles greater than 1 micrometer.

FIELD STRENGTH. A force field created by a large potential difference between surfaces of different polarity; measured by the potential difference divided by distance between surfaces.

FILAMENT.[2] A continuous fiber.

FILL.[2] Crosswise threads woven by loom.

FILL COUNT.[2] Number of fill threads per inch of cloth.

FILTER MEDIUM. The substrate support for the filter cake; the fabric on which the filter cake is built.

FILTER VELOCITY. The velocity at which the air (gas) passes through the filter medium, or the velocity of approach to the medium. The filter capacity rate.

FLY ASH. Finely divided particles of ash entrained in flue gases arising from the combustion of fuel. The particles of ash may contain unburned fuel and minerals.

FUGITIVE DUSTS. A type of particulate emission made airborne by forces of wind, man's activity, or both--such as construction sites, tilled land, or windstorms.[3]

FUGITIVE EMISSIONS. Particles generated by industrial or other activities which escape to the atmosphere not through primary exhaust systems but through openings such as windows, vents and doors, ill-fitting oven doors, or poorly-maintained equipment.[3]

FUGITIVE EMISSIONS. Industrial process such as emissions from a point, area, or line source other than a stack, flue, or control system. Emissions escape to the atmosphere from a defined industrial process flow stream because of leakage, materials charging/ handling, inadequate operational control, lack of reasonably available control technology, transfer, or storage.

FUME.[1] Fine solid particles predominately smaller than 1 micrometer in diameter suspended in a gas. Usually formed from high-temperature volatilization of metals or by chemical reaction.

GALVANIC SERIES.[1] A list of metals arranged according to their relative tendencies to corrode. When dissimilar metals are joined together in an electrolytic solution, the one closest to the "active" end of the galvanic series corrodes preferentially to the one closest to the "passive" end.

GRAVITY, SPECIFIC.[2] The ratio of the mass of a unit volume of a substance to the mass of the same volume of a standard substance at a standard temperature. Water is usually the standard substance. For gases, dry air at the same temperature and pressure as the gas is often the standard substance.

GRID.[1] A stationary support or retainer for a bed of packing in a packed bed scrubber.

HEADER.[1] A pipe used to supply and distribute liquid to downstream outlets.

HUMIDITY, ABSOLUTE.[2] The weight of water vapor carried by a unit weight of dry air or gas.

HUMIDITY, RELATIVE.[2] The ratio of the absolute humidity in a gas to the absolute humidity of a saturated gas at the same temperature.

HYDROPHILIC MATERIAL. Particulate matter that adsorbs moisture.

INERTIA. Momentum; tendency to remain in a fixed direction, proportional to mass and velocity.

INTERCEPTION. A type of aerosol collection related to impaction, in which an aerosol impacts the side of an obstacle because of reduced mobility across streamlines.

INTERELECTRODE SPACE. The space between the discharge electrode and the collection plate; the active particle-charging region in an electrostatic precipitator.

INTERSTICES.[2] The openings between the interlacings of the warp and filling yarns; the voids.

ION, GASEOUS. A gas molecule that loses or gains one or more electrons.

IONIZATION. Generation of free electrons that become attached to gas molecules, forming ions.

ISOKINETIC SAMPLING. Matching the gas velocity at the sampling probe entrance to the gas velocity of the localized gas stream to collect a representative particle size distribution.

LIQUOR.[1] A solution of dissolved substance in a liquid (as opposed to a slurry, in which the materials are insoluble).

LOG-NORMAL DISTRIBUTION. A series of points that can be defined by a geometric mean value and a geometric standard deviation.

MEAN FREE PATH. The average distance between successive collisions of gas molecules; related to molecular size and number per unit volume.

MIGRATION VELOCITY. The average drift velocity of charged particles normal to the direction of gas movement; also known as precipitation rate parameter, a measure of the efficiency of collected particles to the volume of gas treated and the area of the collection plate.

MOBILITY. A measure of response per unit force; the ease of motion relative to the magnitude of the force-inducing motion.

MONOFILAMENT.[2] A continuous fiber of sufficient size to serve as yarn in normal textile operations.

MULLEN BURST. The pressure necessary to rupture a secured fabric specimen.

MULTIFILAMENT (MULTIFIL).[2] A yarn bundle composed of a number of filaments.

NAPPING PROCESS.[2] A process to raise fiber of filament ends (for better coverage and more surface area), accomplished by passing the cloth over a large revolving cage or drum of small power-driven rolls covered with card clothing (similar to a wire brush).

NEEDLED FELT.[2] A felt made by the placement of loose fiber in a systematic alignment, with barbed needles moving up and down, pushing and pulling the fibers to form an interlocking of adjacent fibers.

NONWOVEN FELT. A felt made by needling, matting of fibers, or compression with a bonding agent for permanency.

OPACITY. Measure of the fraction of light attenuated by suspended particulate.

PARTICLE. Small discrete mass of solid or liquid matter.

PARTICLE SIZE. An expression for the size of liquid or solid particle.

PARTICULATE MATTER. As related to control technology, any material except uncombined water that exists as a solid or liquid in the atmosphere or in a gas stream as measured by a standard (reference) method at specified conditions. The standard method of measurement and the specified conditions should be implied in or included with the particulate matter definition.

PARTICULATE MATTER, ARTIFACT. Particulate matter formed by one or more chemical reactions within the sampling train.

PENETRATION. Fraction of suspended particulate that passes through a collection device.

PERMEABILITY, FABRIC. The capability of air (gas) to pass through a fabric. Measured on Frazier porosity meter or Gurley permeometer. Not to be confused with dust permeability.

PENTHOUSE (ESP).[1] Weatherproof gas-tight enclosure over the electrostatic precipitator that contains the high-voltage insulators.

pH.[1] A measure of acidity-alkalinity of a solution; determined by calculating the negative logarithm of the hydrogen ion concentration.

PLAIN WEAVE.[2] Each warp yarn passing alternately over each filling yarn. The simplest weave, 1/1 construction; also called taffeta weave.

PLATE AREA. The effective area of both sides of the collecting surfaces in an electrostatic precipitator.

POLYDISPERSITY. A particle size distribution consisting of different size particles.

PRESSURE, STATIC. The pressure exerted in all directions by a fluid; measured in a direction normal to the direction of flow.

PRESSURE, TOTAL. The algebraic sum of the velocity pressure and the static pressure.

PRESSURE, VELOCITY. The kinetic pressure in the direction of gas flow.

PRIMARY PARTICULATE MATTER. Particulate matter emitted directly into the air from identifiable sources.

PRIMARY STANDARD. The national primary ambient air quality standard which defines levels of air quality that are necessary to protect public health.

PRIME COAT (PRIMER).[1] A first coat of paint applied to inhibit corrosion or to improve adherence of the next coat.

QUENCH.[1] Cooling of hot gases by rapid evaporation of water.

RAPPER (ESP). Device for imparting acceleration of the collecting surface to dislodge the deposited particles.

RAPPER INSULATOR. A device that electrically isolates a rapper from the high-voltage system of an electrostatic precipitator, yet permits the transmission of mechanical forces.

REFRACTORY.[1] Ceramic material used for the lining of vessels, ducts, and pipe for protection from heat, abrasion, or corrosion; also used for insulation.

RESISTIVITY. The impedance offered to charge transfer across a dust layer; defined by the ratio of electric field intensity to the current per unit area passing through the dust layer.

REYNOLDS NUMBER, FLUID. A dimensionless quantity in fluids to describe the ratio of inertial to viscous forces.

REYNOLDS NUMBER, PARTICLE. A dimensionless quantity in aerosol science to describe the ratio of inertial to viscous forces relative to the particle.

SATEEN.[2] Cotton cloth made with a 4/1 satin weave, either as warp sateen or filling sateen.

SATURATED GAS.[1] A mixture of gas and vapor to which no additional vapor can be added, at specified conditions. Partial pressure of vapor is equal to vapor pressure of the liquid at the gas-vapor mixture temperature.

SATIN WEAVE.[2] A fabric usually characterized by smoothness and luster. Generally made warp face with a great many more ends than picks. The surface consists almost entirely of warp (or filling) floats in construction 4/1 to 7/1. The intersection points do not fall in regular lines, but are shifted regularly or irregularly.

SECONDARY PARTICULATE MATTER. Particulate matter formed in the atmosphere by physical and/or chemical gas-to-aerosol conversion mechanisms.

SECONDARY POLLUTANT. A pollutant not emitted into the air from a pollution source, but formed in the air from the reactions of primary pollutants (often photochemically).

SEEPAGE. The migration of particles through a freshly cleaned fabric.

SIZE DISTRIBUTION. Distribution of particles of different sizes within a matrix of aerosols; numbers of particles of specified sizes or size ranges, usually in micrometers.

SLURRY.[1] A mixture of liquid and finely divided insoluble solid materials.

SMOKE. Small gasborne particles resulting from imcomplete combustion; particles consist predominantly of carbon and other combustible material; present in sufficient quantity to be observable independently of other solids.

SNEAKAGE. Portion of a gas stream that bypasses the intended collection area in an electrostatic precipitator.

SOOT. An agglomeration of carbon particles impregnated with "tar," formed in the incomplete combustion of carbonaceous material.

SPECIFIC GRAVITY.[1] The ratio between the density of a substance at a given temperature and the density of water at 4°C.

SPRAY NOZZLE.[1] A device used for the controlled introduction of scrubbing liquid at predetermined rates, distribution patterns, pressures, and droplet sizes.

SPUN FABRIC.[2] Fabric woven from staple (spun) fiber; same as staple.

STAPLE FIBER.[2] Manmade fibers cut to specific length (1½ in., 2 ft, 2¼ in., etc.); natural fibers of a length characteristic of fiber, animal fibers being the longest.

STOKES NUMBER. Descriptive of the particle collection potential of a specific system; the ratio of particle-stopping distance to the distance a particle must travel to be captured.

STREAMLINE. The visualized path of a fluid in motion.

SUSPENDED PARTICULATE MATTER. Particulate matter in the ambient atmosphere, as determined by a specific reference method; material generally referred to as total suspended particulate (TSP); consists of particles within the size range of 100 to 0.1 micrometer in diameter.

TENSILE STRENGTH.[2] The capability of yarn or fabric to resist breaking by direct tension. Ultimate breaking strength.

TEMPERATURE, ABSOLUTE.[2] Temperature expressed in degrees above absolute zero.

TERMINAL SETTLING VELOCITY. The steady-state speed of a falling particle after the equilibration of gravitation, drag, and buoyant forces has occurred.

TRANSFORMER-RECTIFIER SETS. Electrical device used in electrostatic precipitators to rectify a.c. to d.c. and to transform low voltage to high voltage.

THREAD COUNT. The number of ends and picks per inch of a woven cloth.

TURBULENT FLOW. A type of flow in which the fluid passes in a nearly random, fluctuating motion.

TWILL WEAVE.[2] Warp yarns floating over or under at least two consecutive picks from lower to upper right, with the point of intersection moving one yarn either outward and upward or downward on succeeding picks, causing diagonal lines in the cloth.

VAPOR. The gaseous form of substances that are normally in the solid or liquid state and whose states can be changed either by increasing the pressure or by decreasing the temperature.

WARP.[2] Lengthwise threads in loom or cloth.

WARP COUNT.[2] Number of warp threads per inch of width.

WET/DRY LINE.[1] The interface of hot, dry particulate-laden gas and cooling or scrubbing liquid, at which an accumulation of solids can occur.

WOVEN FELT.[2] Predominantly a woven woolen fabric heavily fulled or shrunk, with the weave completely hidden by the entanglement of the woolen fibers.

GLOSSARY REFERENCES

1. Industrial Gas Cleaning Institute. Wet Scrubber Terminology. Publication WS-1, July 1975.

2. Industrial Gas Cleaning Institute. Fundamentals of Fabric Collectors and Glossary of Terms. Publication F-2, August 1972.

3. PEDCo Environmental, Inc. Technical Guidance for Control of Industrial Process Fugitive Particulate Emission. EPA-450/3-77-010, March 1977.

Page Intentionally Blank

SECTION 9
SOURCES OF PARTICULATE EMISSIONS AND CONTROL TECHNIQUES

Section 9, which is Volume 2, describes specific stationary sources and applicable control technologies. To the degree available, information is provided regarding:

- Industry, process, or source description
- Emission characteristics and applicable control technology
- New Source Performance Standards (NSPS) promulgated under Section 111 of the Clean Air Act
- Secondary environmental impacts

Costs of particulate control systems, their energy requirements, and methods of handling and disposing of liquid and solid wastes are not presented in detail in Section 9. These subjects are discussed in detail in Sections 6 and 7 of Volume 1 and, more specifically, in a number of the references cited for the industry being described.

Criteria for selection of source categories are presented in Section 9.1. Detailed descriptions are presented in Sections 9.2 through 9.12.

Page Intentionally Blank

9.1 STATIONARY SOURCE SELECTION

Approximately eighty (80) industrial and/or process-specific sources of particulate matter have been selected for discussion. The selection was based on one of the following guidelines:

- The average plant/source emitted more than 91 megagrams (100 tons) of particulate matter per year.
- The EPA has promulgated or is planning to promulgate a New Source Performance Standard (NSPS) for the source.[1]

The selected sources are grouped into eleven categories, namely:

- Stationary combustion sources
- Refuse incineration
- Open burning
- Chemical process industry
- Food and agriculture processes
- Mineral products industry
- Metallurgical industry
- Petroleum industry
- Forest products industry
- Lead-acid battery manufacturing
- Fugitive dust sources

REFERENCES FOR SECTION 9.1

1. Monarch, M. R., et al. Priorities for New Source Performance Standards Under the Clean Air Act Amendments of 1977. Argonne National Laboratory. Publication No. EPA-450/3-78-019. April 1978.

9.2 STATIONARY COMBUSTION SOURCES

This section reviews particulate control technologies for stationary combustion sources which are categorized by primary fuel (coal, refuse, oil), firing mechanism, and application. Six categories of stationary combustion sources are reviewed. These include: pulverized coal-fired boilers, stoker fed coal-fired boilers, coal-fired cyclone furnaces, nonfossil-fuel-fired boilers, oil-fired utility boilers, oil-fired industrial/commercial boilers.

9.2.1 Pulverized Coal-Fired Boilers

Pulverized coal-fired boilers are used to produce steam for electric power generation and for large industrial operations. As of late 1977, the total capacity of fossil fuel-fired electric utility steam generators was 380 gigawatts.[1] During 1977, coal provided about 62 percent of the electric power derived from fossil fuel-fired steam generators.[1] Individual units range from 15 to 1300 megawatts of power output. In 1978, particulate emissions from electric utility coal-fired steam generators were about 2,400 gigagrams.[2] Nearly all new coal-fired electric utility steam generators are pulverized coal-fired units.[3] Figure 9.2-1 shows the components of a typical pulverized coal-fired boiler.[4]

9.2.1.1 Source Description. In general, particulate matter is produced along with thermal energy and other combustion products in the boiler combustion chamber. The walls of the combustion chamber are lined with water-filled tubes where thermal energy is absorbed and steam is generated. Combustion products flow from the combustion chamber to superheat and reheat sections where further thermal energy is transferred to the steam. Upon leaving these sections, the combustion products typically flow to an economizer and then an air preheater before passing through pollution control devices, an induced draft fan, and out the stack. Table 9.2-1 gives selected stack parameters for utility pulverized coal-fired boilers.[5,6]

9.2.1.2 Emission Characteristics and Applicable Control Technologies. Coal combustion produces solid wastes. These materials consist of inorganic mineral constituents in the charged fuel as well as any unburned organic matter. The inorganic material can be present in the fuel in concentrations of from 3 to 30 percent. During combustion, the solid inorganic material (ash) is divided into two fractions: bottom ash, collected from the bottom

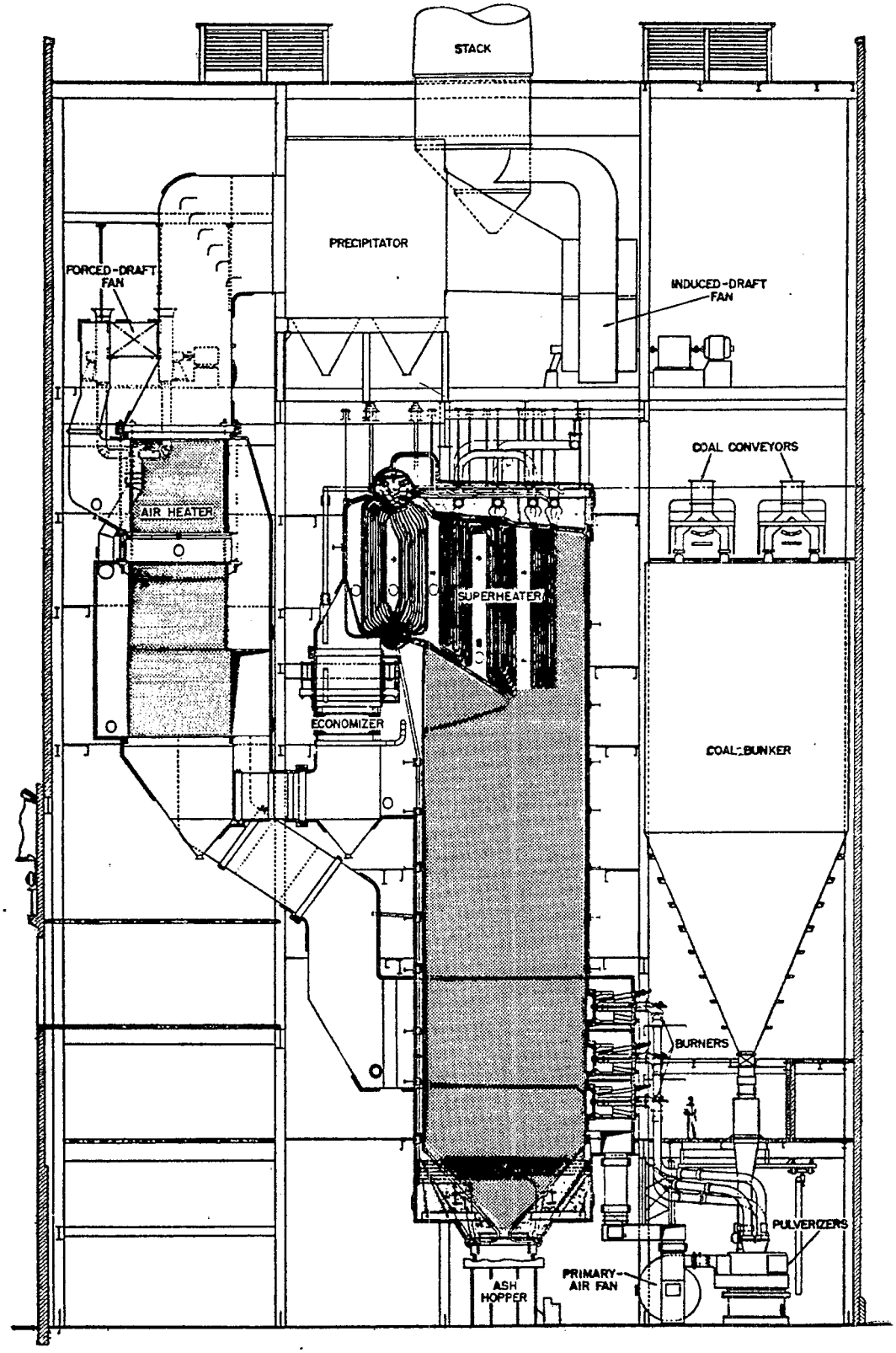

Figure 9.2-1 Pulverized coal-fired boiler with burners mounted in front wall.[4]

Table 9.2-1. SELECTED STACK PARAMETERS FOR PULVERIZED COAL-FIRED UTILITY AND INDUSTRIAL BOILERS[5,6]

Boiler type	Size, MW	Stack height, m	Stack diameter, m	Stack temperature, K	Flue gas volumetric flowrate, Am^3/min
Utility	300	175	5.82	400	32,000
Industrial	70	55	2.8	470	9,800

of the boiler in the ash hopper; and flyash, collected in the mechanical collectors, electrostatic precipitators, or high efficiency particulate matter control devices. Organic and inorganic gas phase pollutants are also contained in the combustion gas. Gas phase organics include low molecular weight unburned hydrocarbons. Inorganic constituents in the gas phase include nitrogen oxides, hydrochloric acid, and sulfur dioxide. Vaporized metals such as mercury can also be present. Discussion of the control of these pollutants is outside the scope of this document. References 7 and 8 provide additional information on the products of coal combustion.

The distribution of ash between the bottom ash and flyash fractions is a function of the type of boiler, the coal type, and the boiler configuration. A comparison of the typical chemical composition of each fraction is presented in Table 9.2-2. Pulverized coal-fired boilers produce 60 to 85 percent flyash and 15-40 percent bottom ash. This range is dependent upon the ash fusion temperature and whether the boiler is a wet or dry type. Wet bottom boilers are designed to process more slag (bottom ash before cooling) and therefore generate less flyash.[9]

Flyash is primarily made up of particles ranging in size from 0.5 to 100 micrometers. Approximately 20 percent by volume of the flyash consists of light particles called cenospheres. Cenospheres are hollow silicate glass spheres filled with nitrogen and carbon dioxide gas. They range in size from 20 to 200 micrometers and float when sluiced to a settling pond.

The major chemical constituents of flyash and cenospheres are silicon, aluminum, iron, and calcium. These elements make up approximately 95 to 99 percent of the total weight of the ash.

Of the control technologies described in Section 4 of Volume 1, the most commonly used high efficiency device on pulverized coal-fired utility boilers is the electrostatic precipitator. Fabric filters or scrubbers are also used. Mechanical collectors, such as settling chambers and cyclones, have only a limited effect on fine particulates; they will not reduce particulate emissions sufficiently to meet state and local regulations.[5] However, mechanical collectors are sometimes installed upstream of high efficiency control devices in order to reduce the burden on subsequent equipment.

The selection of a particulate control technology for a particular application is influenced by the physical and chemical constituents of the coal

Table 9.2-2. ANALYSES OF FLYASH (FA) AND BOTTOM ASH (BA) FROM UTILITY PLANTS[9]

Compound or element	Plant 1		Plant 2		Plant 3		Plant 4		Plant 5		Plant 6	
	FA	BA	FA	BA	FA	BA	FA	BA	FA	BA	FA	BA
SiO_2, %	59.0	58.0	57.0	59.0	43.0	50.0	54.0	59.0	NR	NR	42.0	49.0
Al_2O_3,%	27.0	25.0	20.0	18.5	21.0	17.0	28.0	24.0	NR	NR	17.0	19.0
Fe_1O_3,%	3.8	4.0	5.8	9.0	5.6	5.5	3.4	3.3	20.4	30.4	17.3	16.0
CaO, %	3.8	4.3	5.7	4.8	17.0	13.0	3.7	3.5	3.2	4.9	3.5	6.4
SO_3,%	0.4	0.3	0.8	0.3	1.7	0.5	0.4	0.1	NR	0.4	NR	NR
MgO	0.96	0.88	1.15	0.92	2.23	1.61	1.29	1.17	NR	NR	1.76	2.06
Na_2O	1.88	1.77	1.61	1.01	1.44	0.64	0.38	0.43	NR	NR	1.36	0.67
K_2O	0.9	0.8	1.1	1.0	0.4	0.5	1.5	1.5	NR	NR	2.4	1.9
P_2O_5,%	0.13	0.06	0.04	0.05	0.70	0.30	1.00	0.75	NR	NR	NR	NR
T_1O_2,%	0.43	0.62	1.17	0.67	1.17	0.50	0.83	0.50	NR	NR	1.00	0.68
As, ppm	12.0	1.0	8.0	1.0	15.0	3.0	6.0	2.0	8.4	5.8	110.0	18.0
Be, ppm	4.3	3.0	7.0	7.0	3.0	2.0	7.0	5.0	8.0	7.3	NR	NR
Cd, ppm	0.5	0.5	0.5	0.5	0.5	0.5	1.0	1.0	6.44	1.08	8.0	1.1
Cr, ppm	20.0	15.0	50.0	30.0	150.0	70.0	30.0	30.0	206.0	124.0	300.0	152.0
Cu, ppm	54.0	37.0	128.0	48.0	69.0	33.0	75.0	40.0	68.0	48.0	140.0	20.0
Hg, ppm	0.07	0.01	0.01	0.01	0.03	0.01	0.08	0.01	20.0	0.51	0.05	0.028
Mn, ppm	267.0	366.0	150.0	700.0	150.0	150.0	100.0	100.0	249.0	229.0	298.0	295.0
Ni, ppm	10.0	10.0	50.0	22.0	70.0	15.0	20.0	10.0	134.0	62.0	207.0	85.0
Pb, ppm	70.0	27.0	30.0	30.0	30.0	20.0	70.0	30.0	32.0	8.1	80.0	6.2
Se, ppm	6.9	0.2	7.9	0.7	18.0	1.0	12.0	1.0	26.5	5.6	25.0	0.08
V, ppm	90.0	70.0	150.0	85.0	150.0	70.0	100.0	70.0	341.0	353.0	440.0	260.0
Zn, ppm	63.0	24.0	50.0	30.0	71.0	27.0	103.0	45.0	352.0	150.0	740.0	100.0
B	266.0	143.0	200.0	125.0	300.0	70.0	700.0	300.0	NR 0	NR 0	NR	NR
Co, ppm	7.0	7.0	20.0	12.0	15.0	7.0	15.0	7.0	6.0	3.6	39.0	20.8
F, ppm	140.0	50.0	100.0	50.0	610.0	100.0	250.0	85.0	624.0	10.6	NR	NR

to be burned, governing regulations, and disposition of the collected material. The present energy policy of the United States (i.e., increased coal consumption), coupled with the required control of sulfur oxides in the flue gas, has resulted in the increased use of low sulfur coal. Combustion of low sulfur coal usually leads to the formation of an ash highly resistant to collection in conventional electrostatic precipitators located after the air preheater (see Volume 1, Section 4.3). Existing electrostatic precipitators often operate at significantly reduced efficiencies when users switch from high sulfur to low sulfur coal.[10]

To overcome this problem, the user has had to take one or more of the following steps: (1) install a larger precipitator, (2) install the precipitator upstream of the air preheater (because of reduced resistivity at gas temperatures at this point), (3) condition the ash, and (4) install different control hardware. The size of the precipitator must be increased to compensate for the decreased migration velocity. Ash conditioning reduces resistivity through the addition of chemicals such as sulfur trioxide, sulfuric acid, or ammonia to the gas stream; these chemicals are adsorbed on the surface of the ash, thereby increasing its conductivity.

Finally, the use of other control devices may be an alternative to precipitator collection. Scrubbers have been used to control particulate matter, although the typical use of wet scrubbers is in the control of sulfur dioxide. The greatest drawbacks to scrubbers are the large energy requirement necessary to attain the efficiency levels required (see Volume 1, Section 4.4). Fabric filters also have recently experienced increased use for particulate emissions control; they are unaffected by flyash resistivity and can meet present standards for performance.

Regardless of the control device selected, the effectiveness of the applicable control technology is dependent on the equipment's design. Table 9.2-3 gives characteristic operating information for high efficiency electrostatic precipitators, fabric filters and scrubbers.[5,11,12,13,14] The efficiency information given in Table 9.2-3 applies to total particulate emissions control.

Table 9.2-4 presents controlled and uncontrolled emission data from four coal-fired boilers.[15] These limited data show that the efficiency of the control devices used on these sources generally decreases with decreasing

Table 9.2-3. DESIGN PARAMETERS FOR PARTICULATE CONTROL EQUIPMENT APPLIED TO PULVERIZED COAL-FIRED BOILERS[5,11,12,13,14]

Control technique	Design parameter	Typical or range of values	Reference
Electrostatic precipitators	SCA (high sulfur coal, cold side application)	75 to 100 m^2 per Am^3/min	5
	SCA (low sulfur coal, cold side application)	115 to 130 m^2 per Am^3/min	5
	SCA (low sulfur coal, hot side application)	60 to 70 m^2 per Am^3/min	5
	Collection area per rapper	185 to 230 m^2	--
	Plate spacing	0.23 to 0.35 m	11
	Plate height	7.3 to 13.7 m	11
	Pressure drop	Less than 0.25 kPa	5,12
	Migration velocity	15 to 60 cm/sec	--
	Rapping method	Pneumatic, electro-magnetic, or mechanical	11
	Efficiency	Greater than 99 percent	--
Fabric filters	Filtering velocity (air-to-cloth ratio)	0.6 to 0.9 m/min	5
	Bag fabric	Glass fabrics	5
	Cleaning method	Mechanical shaking, reverse air flow	13

Table 9.2-3 Concluded. DESIGN PARAMETERS FOR PARTICULATE CONTROL EQUIPMENT APPLIED TO PULVERIZED COAL-FIRED BOILERS

Control technique	Design parameter	Typical or range of values	Reference
Fabric filters (continued)	Pressure drop	Less than 1.5 kPa	5
	Bag diameter	0.2 to 0.3 m	13
	Bag length	6.1 to 12.2 m	13
	Efficiency	Greater than 99 percent	--
Wet scrubber (venturi)	Liquid-to-gas ratio	1.3 to 2.0 L/Am^3	14
	Pressure drop	4.0 to 7.C kPa	5, 14
	Efficiency	95 to 99 percent	--
Wet scrubber (moving bed)	Liquid-to-gas ratio	7.0 L/Am^3	14
	Pressure drop	2.5 to 4.0 kPa	6
	Efficiency	95 to 99 percent	--
Wet scrubber (performed spray)	Liquid-to-gas ratio	1.3 to 6.7 L/Am^3	1
	Pressure drop	1.0 to 1.5 kPa	6
	Efficiency	95 to 99 percent	--

Table 9.2-4 SIZE SPECIFIC EMISSIONS FROM PULVERIZED COAL-FIRED BOILERS[15]

Control device operating parameter		Mass concentration, mg/DNCM (mass percent less than stated size)							
		Total	15.3 m	12.9 m	10.1 m	7.28 m	5 m	2.5 m	1.01 m
Scrubber 2.5 kPa pressure drop[a]	Uncontrolled	3925	993(25.3)	848(21.6)	675(17.2)	506(12.9)	372(94.8)	201(5.12)	57.5(1.47)
	Controlled	105	101(95.7)	100(95.4)	100(94.9)	99.7(94.2)	98.7(93.3)	96(90.8)	87.4(82.6)
	Efficiency	97.0	89.8	88.1	85.2	80.3	73.5	52.2	NA
Scrubber 4.2 kPa pressure drop[b]	Uncontrolled	4360	1330(30.5)	1180(27.1)	1070(24.5)	966(22.1)	836(19.1)	352(8.07)	87.5(2.0)
	Controlled	31.5	29.9(94.9)	29.3(92.9)	29.1(92.4)	29.1(92.4)	29.1(92.3)	29.0(92.0)	25.5(80.9)
	Efficiency	99.3	97.7	97.5	97.3	96.9	96.5	91.8	70.9
ESP 60 m^2/M^3/min specific collection area[c]	Uncontrolled	2933	1100(37.5)	1040(35.5)	990(33.6)	918(31.2)	826.3(28.0)	519(17.7)	400(13.6)
	Controlled	54.9	49.2(89.6)	45.3(82.4)	36.4(66.2)	31.9(58.1)	28.1(51.2)	21.5(39.2)	11.8(21.4)
	Efficiency	98.1	95.6	95.6	96.3	96.5	96.6	95.8	97.1
Fabric filter 0.85 M^3/M^2 min air to cloth ratio[d]	Uncontrolled	3164	1060(33.5)	883(27.8)	591(18.7)	358(11.3)	262(8.27)	145(4.6)	85.4(2.7)
	Controlled	8.01	6.42(80.1)	4.77(59.6)	4.19(52.4)	3.43(42.8)	2.56(32.0)	1.6(20.4)	0.983(12.0)
	Efficiency	99.7	99.4	99.4	99.3	99.0	99.0	98.8	98.8

[a]The Fine Particulate Emissions Information System (FPEIS) number is 51.
[b]The FPEIS number is 130.
[c]The FPEIS number is 122.
[d]The FPEIS number is 35.

particle size. More extensive data on particulate emissions and emission control are given in References 5 and 16.

New Source Performance Standards (NSPS) have been promulgated by EPA for fossil fuel-fired steam generators with heat inputs greater than 73 megawatts (250 million Btu/h). Standards promulgated in 1971 limit particulate emissions to 43 nanograms/joule (0.10 lb/million Btu) heat input. The NSPS was revised in 1979 as it applies to steam used to generate electric power. For these units, particulate emissions are limited to 13 ng/j (0.03 lb/million Btu) heat input.

The NSPS also established limits for emissions of SO_2 and NO_x from the same boilers. These restrictions have the effect of preventing the formation of secondary particulates in the atmosphere.

9.2.1.3 Secondary Environmental Impacts. Implementation of particulate emissions control has secondary environmental impacts on land and water quality. The amount of ash to be disposed of is a direct function of: the concentration of the ash in the fuel; the quantity of fuel consumed; the distribution of ash between the bottom ash and flyash fractions; and the effectiveness of control. Figure 9.2-2 shows flyash generation as a function of ash content and control system efficiency.[17] The primary environmental impact from disposal of ash is the land requirement associated with disposal. The prevalent method for disposal of flyash collected by dry collectors is wet-sluicing it from ESPs or fabric filters to on-site ponds. The water requirements for wet-sluicing can range from 5,000 to 165,000 L/Mg of ash. Scrubber sludge can also be disposed of in on-site ponds, or it may be combined with collected flyash and used as a landfill.[18]

Ash ponds may be lined or unlined. The usual lining material is clay; synthetic plastic or rubber liners are also commercially available. Potential leaching of trace elements in the ash to ground water is a major concern, and proper lining is essential to prevent this from happening.

Ash utilization is becoming more prevalent. In 1974, 8.4 percent of the flyash, 20.3 percent of the bottom ash, and 50.0 percent of the boiler slag generated in the United States was used primarily in: Portland cement and asphalt concrete mixtures, road surfacing, and other miscellaneous products.[18]

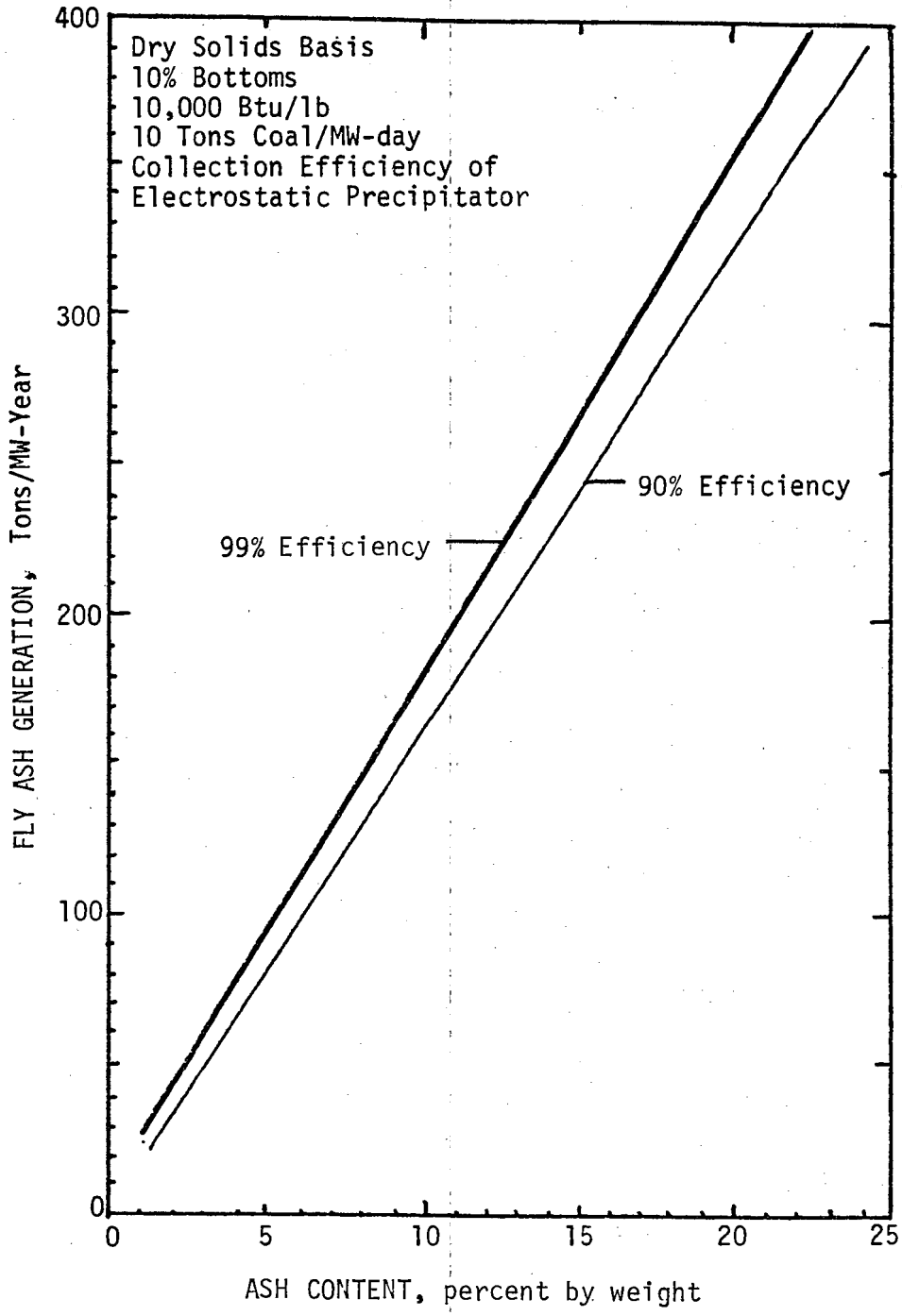

Figure 9.2-2 Flyash generation from coal-fired boilers.[17]

Sludge disposal from wet scrubbers usually involves transporting the slurry to settling ponds, then recycling the separated scrubber solution. Again, proper lining of settling ponds should reduce leaching of trace elements into the ground or ground water. Operation of these scrubber systems, as well as flyash sluicing systems, in total recycle (closed loop) will help reduce contamination of streams or ground water.

9.2.2 Stoker Fed Coal-Fired Boilers

Stoker boilers account for nearly all coal-fired boilers used by industry in the range of 2.9 to 73 MW heat input.[19] Small pulverized coal-fired boilers represent the balance. Stokers are classified as follows by the methods used to introduce fuel into the furnace:

- Spreader
- Underfeed
- Overfeed

9.2.2.1 Source Description. Spreader stokers are generally larger than all other stoker types. In spreader stokers, coal is injected midway into the furnace above a burning fuel bed. Spreader stokers can be distinguished by the type of grate design: stationary and dumping grate, traveling grate, or vibrating grate. Stationary and dumping grates are used mostly in small and medium-sized boilers. The traveling grate, illustrated in Figure 9.2-3, is generally used in large spreader stokers. The use of spreader stokers as industrial equipment to burn coal has increased constantly in recent years, and this use should continue to rise in future years as oil and gas supplies dwindle.[19,20]

Underfeed stokers introduce coal through a retort beneath the burning fuel bed. These stokers can be classified as either: single-retort horizontal-feed, or multiple-retort gravity-feed. Figure 9.2-4 is a schematic of a single-retort underfeed stoker. The coal is moved from the trough (retort) toward the rear of the boiler, then upward to spread over the air-admitting tuyeres. Spent fuel is forced to the side dumping grates.

Overfeed stokers feed the coal from above onto a continuously moving bed. The coal enters the furnace on the grate and continues to burn as it moves along the fuel bed, becoming progressively thinner until only ashes remain. There are two basic kinds of overfeed stokers: chain or traveling grate (Figure 9.2-5), and water-cooled vibrating grate.

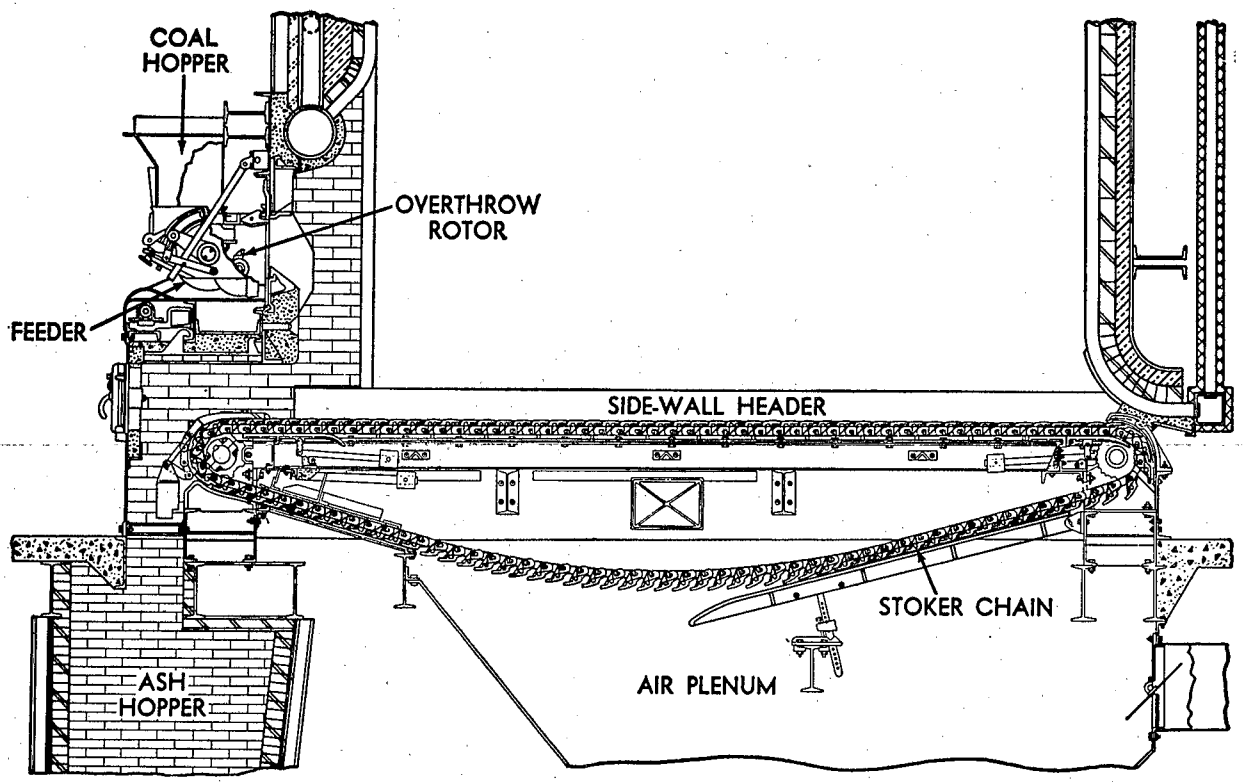

Figure 9.2-3 Traveling grate spreader-stoker with front ash discharge.[4]

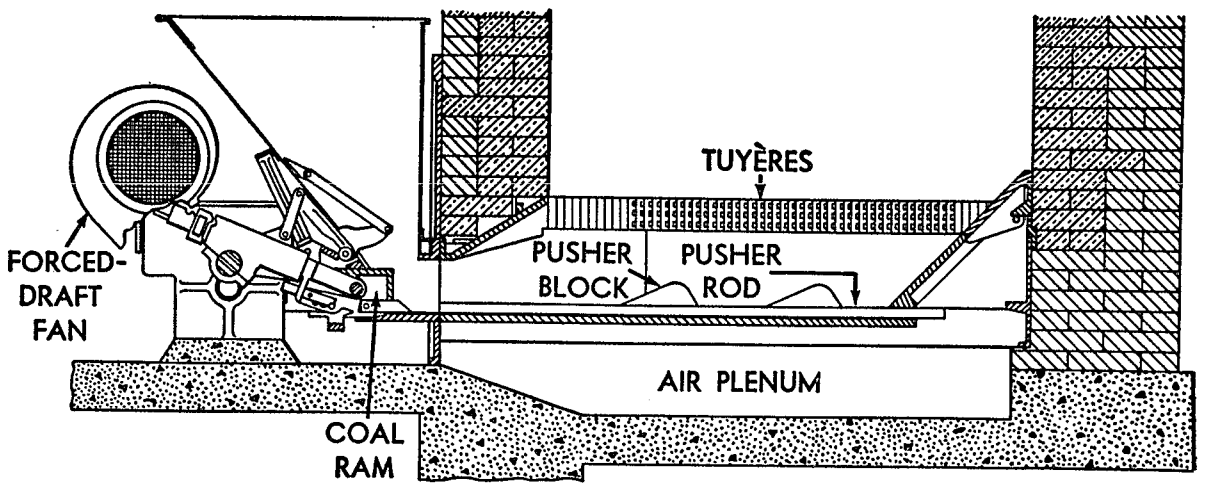

Figure 9.2-4 Single-retort, horizontal-feed, side ash discharge underfeed stoker.[4]

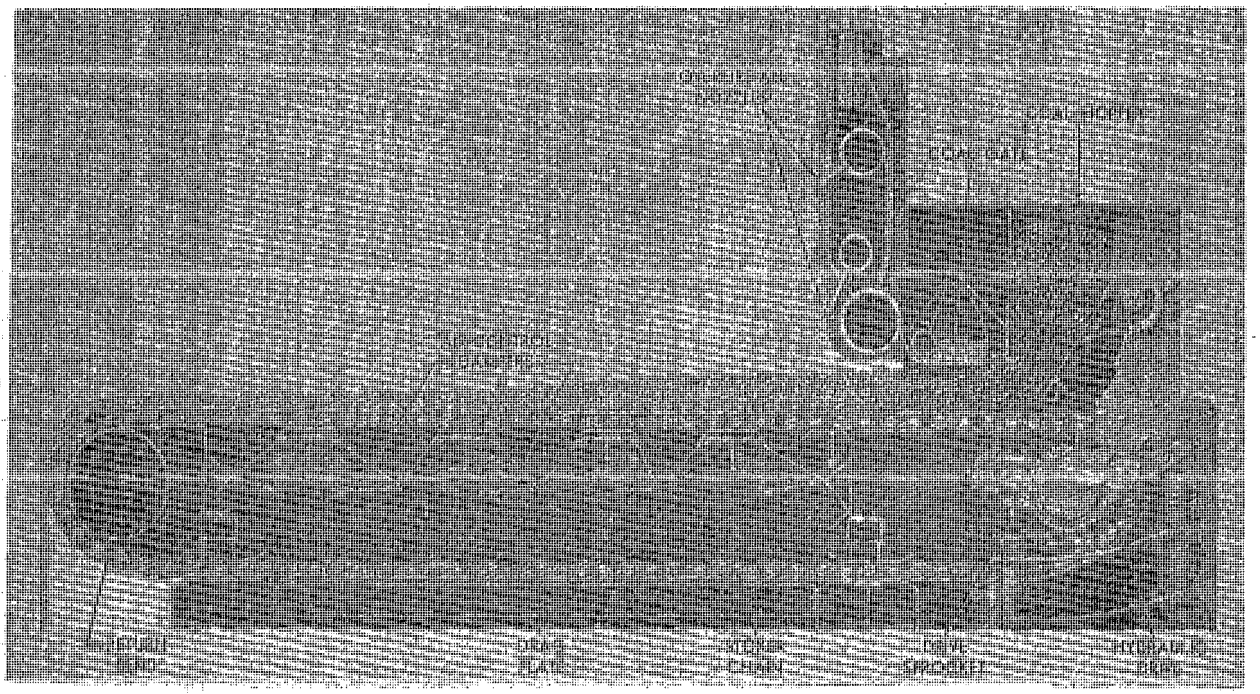
COAL FEED
COAL GATE
FEEDER
SECONDARY AIR
PRIMARY AIR
FEEDER
DRIVE SPROCKET
DRIVE SHAFT
DRIVE SHAFT
DRIVE SPROCKET
IDLER SHAFT
IDLER SPROCKET
IDLER SHAFT
IDLER SPROCKET
GRATE
GRATE
GRATE

With each type of stoker, combustion products pass through or around tubes which transfer thermal energy to the boiler water or steam. Use of superheat sections, reheat sections, economizers, or air preheaters varies with the size and application of the boiler. Thus, combustion product conditions vary both prior to a particulate emissions control device and at the stack exit. Table 9.2-5 presents typical stack parameters for stoker coal-fired boilers.

9.2.2.2 Emission Characteristics and Applicable Control Technologies. Particulate emissions from stoker fed coal-fired boilers may consist of unburned carbon, condensable tars, and flyash. Generally, coal-fired stokers produce less particulate matter than pulverized coal-fired units. Typically, about 65 percent of the total ash from such boilers is emitted as flyash with the balance discharged as bottom ash.[21]

There are four major equipment types available for controlling particulate emissions from stoker fed coal-fired boilers: electrostatic precipitators, mechanical collectors, fabric filters, and wet scrubbers. As in the case of the pulverized coal boilers, combinations of the above may be used, usually with a cyclonic collector upstream of one of the higher efficiency devices.

Selection of the appropriate particulate emissions control technique is more difficult than for the larger pulverized coal-fired boilers. In industries where stoker boilers are used, operating loads and requirements are variable. In addition, industry is less likely to purchase coal on long-term contracts. Thus, the type of coal being burned and the load on the boilers may vary drastically.

Fabric filters and electrostatic precipitators are used for high efficiency particulate control. In the past, when greater particulate emissions were allowed, lower efficiency mechanical collectors such as cyclones were used extensively. Often it is practical to leave such collectors in place and add a high efficiency fabric filter or an electrostatic precipitator downstream. Scrubbers are not widely used for energy and cost reasons.[22,23] Effectiveness of the four types of particulate control techniques is discussed in the following paragraphs. More extensive data are given in Reference 24.

Table 9.2-5. STACK PARAMETERS FOR TYPICAL STOKER COAL-FIRED BOILERS[6]

Boiler type	Size, MW	Stack height, m	Stack diameter, m	Stack temperature, K	Flue gas volumetric flowrate, Am^3/min
Spreader	>29.3	45	2.5	475	2575
	2.9-29.3	36	1.9	515	1065
	<2.9	21	0.9	415	405
Overfeed	>29.3	68	2.9	490	4010
	2.9-29.3	42	2.2	510	1550
	<2.9	35	1.7	470	1560
Underfeed	2.9-29.3	41	2.2	510	1295
	<2.9	21	1.0	455	290

Mechanical Collectors--Multitube cyclones, which represented the most common type of inertial collector used for flyash collection before stricter emission regulations were enacted, are relatively inefficient, especially for particles of less than 10 micrometers.[25] Efficiencies over 85 percent removal by weight are uncommon. Efficiencies of 65 to 70 percent and pressure drops of 1 kPa are typical.

Fabric Filtration--Fabric filtration systems are gaining in favor because they provide high efficiencies at moderate pressure drops.[10] Filter bags usually range from 14 to 18 cm in diameter and 3.5 to 6.0 m in length. Pressure drops of 0.8 kPa to 1.5 kPa and air-to-cloth ratios in the range of 3.5 to 1 and 5 to 1 are typical. Efficiencies of fabric filtration systems are generally around 99.8 percent removal by weight. Fiberglass is the most widely used bag material, and reverse air or pulse jet cleaning is usually used.[13]

Electrostatic Precipitators--ESP modules can be furnished in sizes down to 140 Am^3/min; high efficiencies (99.8 to 99.9 percent by weight) are obtainable. Improperly designed or operated rapper systems can lead to significant mass emissions through reentrainment of coarse particles during the plate rapping (see Volume 1, Section 4.3.3).[26]

Plate spacings range from 20 to 30 cm, with plate heights between 7.6 and 13.7 m; rappers are generally mechanical, although they may be pneumatic or electrical. Specific collection areas vary, depending upon the removal efficiency desired, but they are roughly 100 m^2 per Am^3/s.[11]

Wet Scrubbers--These devices are not widely used to control flyash emissions from stokers. Three types are applicable, namely, venturi, high-pressure spray, and moving bed absorbers. Generally, particulate matter removal efficiencies can exceed 95 percent by weight with a pressure drop of 2.5 to 5 kPa and liquid-to-gas ratios around 2 L/Am^3.[10,14]

9.2.2.3 Secondary Environmental Impacts. Secondary environmental impacts of particulate matter collection from stoker boilers are comparable to impacts from pulverized coal boilers (see Section 9.2.1.3). Water pollution and landfill problems at flyash disposal sites are the primary concerns. If the flyash is transported by a hopper sluicing system, a settling pond or other solid/liquid separation device is used. Pond liners and controlled procedures for discharging, evaporating, or recycling liquids are used to

lessen water pollution impacts. Dry flyash handling and disposal require similar precautions since water runoff can cause leaching of metals into the water table. Aside from outright disposal, flyash is also used in road embankments and in concrete mixes.[27]

9.2.3 Coal-Fired Cyclone Furnaces

Coal-fired cyclone furnaces are not widely used. Only 3.3 percent of all utility and large industrial boilers are cyclone units, and very few have been installed in recent years.[28] Their future use appears limited to firing certain kinds of lignite.[29] One reason for their declining use is the intensity of combustion and the resultant high NO_x content in the gas stream.

9.2.3.1 Source Description. The cyclone furnace is a water-cooled, horizontal cylinder into which partially dried crushed coal of approximately 0.63 cm diameter is fired in a tangential or vortex pattern into the firebox (Figure 9.2-6).[30] Bottom ash is continuously removed through a slag tap in the furnace floor.

9.2.3.2 Emission Characteristics and Applicable Control Technologies. Particulate emissions from cyclone furnaces are less than one-eighth of that from pulverized coal-fired units.[31] Eighty to 85 percent of the ash is collected as slag. The balance of the ash is discharged as flyash. Approximately 85 to 90 percent of the flyash produced is less than 10 micrometers in diameter.[7,30]

A cyclone-fired utility boiler of average size produces 21,850 Am^3/min of flue gas; it has a stack height of 114 m, a stack diameter of 4.4 m, and a stack gas temperature of 430 K.[14] Although no specific effectiveness data were identified, electrostatic precipitators are generally used to control cyclone furnace particulate emissions.[21]

9.2.3.3 Secondary Environmental Impacts. Flyash collected from cyclone boilers is difficult to dispose of due to its small particle size. Unsuited for landfill, the flyash is generally reinjected into the cyclone furnace and converted into the more easily disposed slag.[30] The slag is usually disposed of by landfilling.

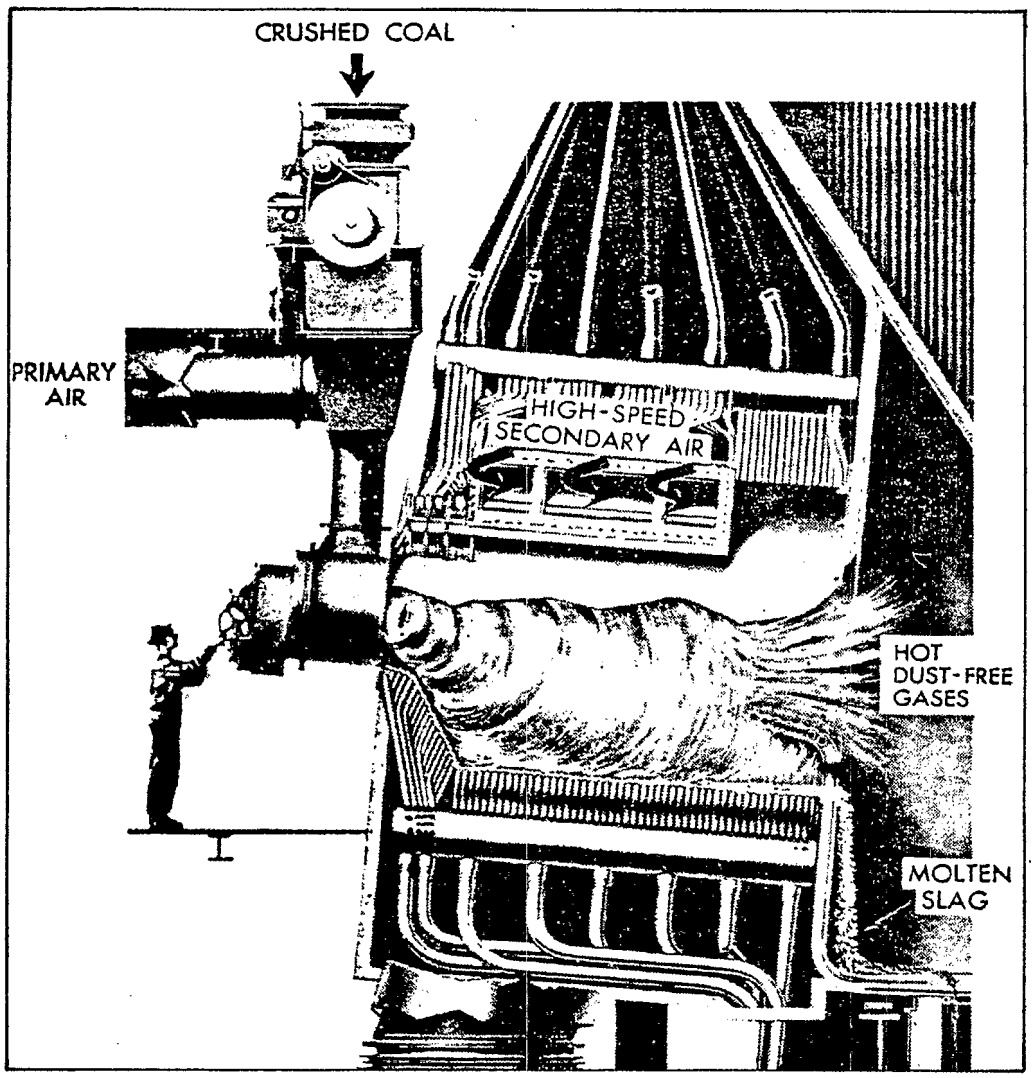

Figure 9.2-6 Cyclone furnace side view.[30]

9.2.4 Nonfossil Fuel-Fired Boilers

Nonfossil fuel-fired boilers burn municipal solid waste (MSW), wood, wood waste and bark (hogged fuel), and refuse-derived fuel (RDF). MSW consists of refuse and garbage from residences, commercial establishments, and industries. Boilers firing MSW are found in district and municipal heating plants and privately owned waste-to-energy facilities. RDF is municipal solid waste that has been processed to remove noncombustibles such as glass and metals. RDF can be burned alone but is often burned as a supplement to coal. In such cases, 10 to 50 percent of boiler heat input (Btu/hour) may come from RDF. Boilers currently burning RDF are operated by utilities or municipalities; however, industrial firms are studying the feasibility of burning RDF with coal in their boilers.

Wood, wood waste and bark are used to fire boilers in the forest products industry, furniture industry, and paper and allied products industry. The forest products industry (e.g., lumber mills) burns log waste and limbs after they are broken into chips in a hammer mill (hogged). The paper industry burns bark that is removed from logs prior to chipping the wood for pulping. Bark is often cofired with coal or oil in boilers to make process steam. Sawdust, sander dust, and wood scraps are burned in boilers in the furniture industry.

Wood is beginning to be harvested and chipped or pelletized for use as a fuel in any boiler.[32,33]

9.2.4.1 Source Description

9.2.4.1.1 Municipal solid waste-fired boilers. Large MSW-fired boilers have been operated in Europe since the late 1940s. Five or six are currently operating in the USA, and several more are planned for completion before 1985. These MSW-fired boilers are typically waterwall furnaces with overfeed stokers and traveling or vibrating grates for ash removal. The MSW is typically burned without being classified; only the largest noncombustibles (e.g., refrigerators) are removed. Following combustion, ferrous metals are removed from the ash, and the residue is landfilled.

A typical large MSW furnace burns 38,200 kg/hr (85,000 lb/hr) of solid waste.[34,35,36] This waste is received on site with a moisture content (wet basis) of 35 percent. Ultimate analysis (Table 9.2-6) of the waste shows a sulfur content of 0.06 percent and a nitrogen content of 0.6 percent

Table 9.2-6. ULTIMATE ANALYSIS OF A TYPICAL GENERAL SOLID WASTE[37]

Moisture	35.00%
Carbon	20.00%
Oxygen (O2)	18.00%
Hydrogen	2.50%
Nitrogen	0.60%
Sulfur	0.06%
Noncombustibles	23.84%
	100.00%

by weight.[37] The heating value of this waste is typically 9287 kJ/kg (4000 Btu/lb) of waste as received.[38] Ash content of the MSW is high (24 percent) because of the large fraction of noncombustibles in the waste.

Uncontrolled emissions from a typical large MSW boiler are presented in Table 9.2-7. A representative size distribution of uncontrolled PM emissions is shown in Figure 9.2-7.[39]

Combustion of MSW in small shop-assembled (modular) boilers was introduced in the late 1960s.[40] These units are constructed in a factory on a package basis and are typically hopper- or ram-fed. To provide easy expansion of burning capacity for small towns and industries, the modular boiler system is designed to allow installation of additional units in modules two to eight as refuse generation increases.[41]

A typical small modular boiler consists of an incinerator with primary and secondary combustion chambers. Units of this type are commonly referred to as "controlled-air" or "starved-air" boilers because these terms denote the control and regulation of the air flowing into the two combustion chambers.[40] Uncontrolled emissions based on actual boiler emissions measurements are shown in Table 9.2-8. Controlled-air boilers commonly burn refuse at 816°C (1500°F) in the primary chamber and at 1038°C (1900°F) in the secondary chamber.[42] A representative size distribution curve for uncontrolled PM (flyash) from a controlled air boiler is shown in Figure 9.2-8.[40]

9.2.4.1.2 Refuse-derived fuel-fired boilers. RDF has a relatively uniform quality. The major RDF fuel types are as follows:

- Fluff from a wet pulping process.
- Fluff from dry processing--size reduction, air classification.
- Screened fluff from dry processing--size reduction, air classification, and screening.
- d-RDF (densified RDF)--pelletization of fluff or screened fluff.
- Powdered RDF--proprietary commercial process, fuel characterized as a fine dustlike material.[44]

The combustion properties of RDF depend upon the degree of processing for the materials described above; some properties of interest are given in Table 9.2-9.[45] Choice of the most appropriate type of RDF depends on the type of boiler used. For example, powdered RDF would be burned in a boiler designed for suspension firing. Briquetted RDF could be burned in a stoker fed boiler.

Table 9.2-7. UNCONTROLLED EMISSIONS FROM A TYPICAL LARGE 525 GJ/hr (500×10^6 Btu/hr) HEAT INPUT MSW-FIRED BOILER[36]

Emission	Mass, kg/hr	(lb/hr)	Concentration,[a] g/Nm^3	(gr/scf)	Heat input, ng/J	(lb/10^6 Btu)
PM	576	(1270)	2.36	(1.03)	1092.91	(2.54)
NO_x	340	(750)	1.39	(0.61)	645.41	(1.50)
SO_2	57	(125)	0.23	(0.10)	107.57	(0.25)
CO_2	41,500	(91,500)	170.15	(74.30)	78,740.82	(183.00)

[a]Concentration values adjusted to 12 percent CO_2.

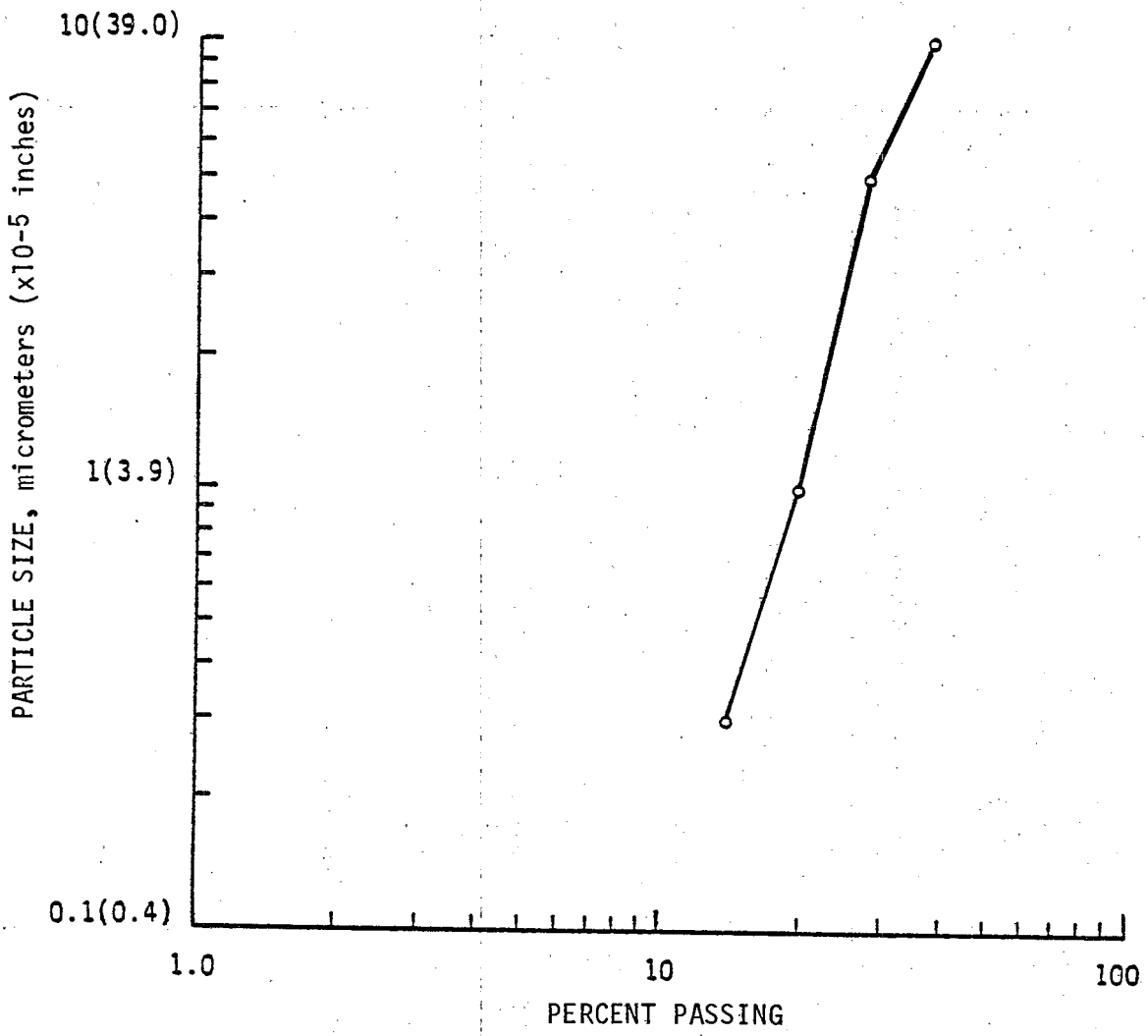

Figure 9.2-7 Size distribution of MSW flyash.[39]

Table 9.2-8 UNCONTROLLED PARTICULATE EMISSIONS FROM MSW-FIRED BOILERS

Plant	Boiler type	Design heat input, GJ/hr (10^6 Btu/hr)	Fuel	Emissions Type	On the basis of concentration at 12% CO_2, g/Nm^3 (gr/scf)	On the basis of heat input, ng/J (lb/10^6)
U[38]	Traveling grate stoker	127 (121)	MSW	PM	3.34 (1.46)	1879 (4.37)
AA[43]	Traveling grate stoker	1210 (1149)	MSW	PM	3.37 (1.47)	4300 (10.00)
BB[40]	Controlled-air combustion	11 (10)	MSW	PM	0.18 (0.08)	85 (0.20)
GG	Controlled-air	19 (18.1)	MSW	PM	0.35 (0.16)	142 (0.33)

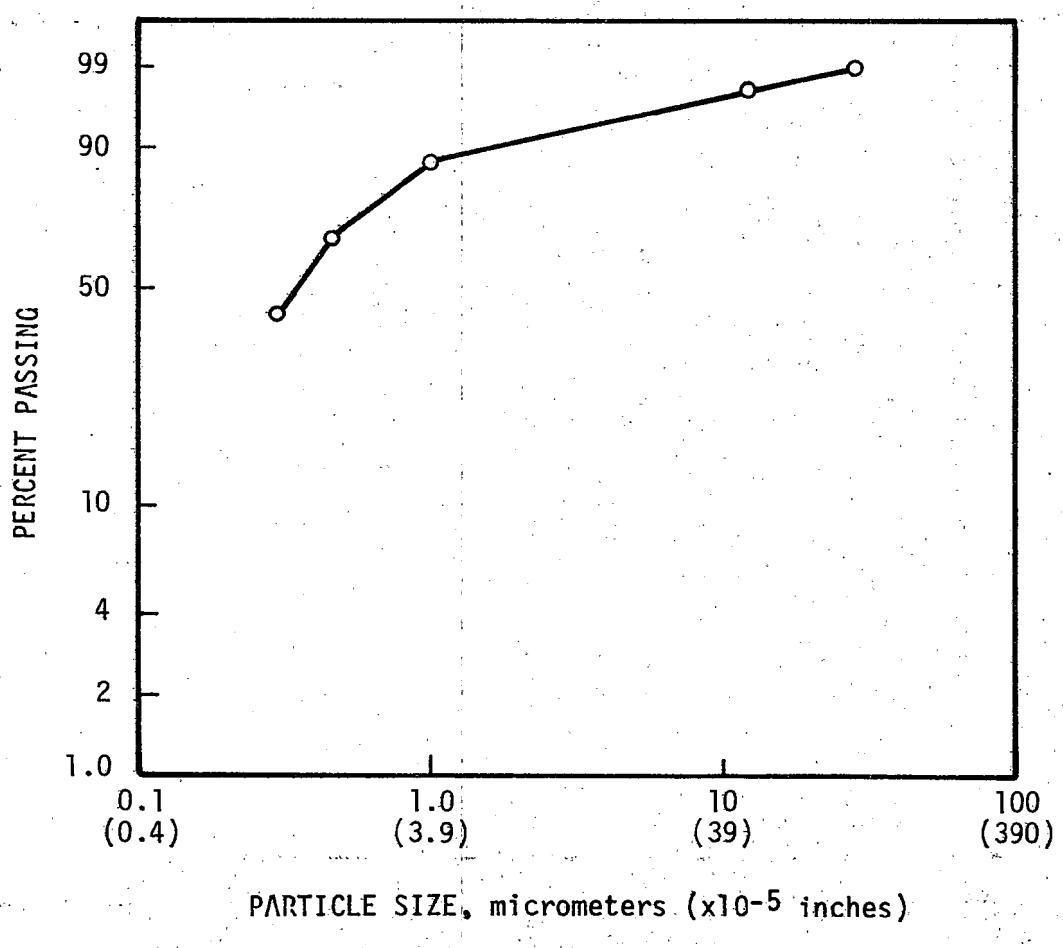

Figure 9.2-8 Size distribution of MSW flyash from a controlled air boiler.[40]

Table 9.2-9 TYPICAL CHARACTERISTICS OF REFUSE-DERIVED FUELS[45]

As-received refuse-derived fuel[a]	Density, kg/m3 (lb/ft^3)		Heating value, kJ/kg (Btu/lb)	H_2O %	Ash %	Approximate particle size
Fluff-wp	224	(14)[b]	8,140 (3500)	50	20	2.5 cm (1.0 in)
Fluff-dp	80-144	(5-9)	12,090 (5200)	25	19	2.5-5.7 cm (1.0-2.5 in)
Screened fluff	16-80	(1-5)	16,750 (7200)	16	10	2.5-5.2 cm (1.0-2.0 in)
d-RDF pellets (from fluff)	380-720	(24-45)	12,090 (5200)	15	18	1.3 cm dia. x 2.5 cm long (0.5 in dia. x 1.0 in long)
d-RDF briquettes (from fluff)	750-900	(47-56)[b]	12,090 (5200)	14	18	3.0 x 3.0 x 7.5 cm (1.25 x 1.25 x 3.0 in)
Powdered RDF	480	(30)	18,011 (7750)	2	10	0.15 mm (0.006 in)

[a]wp = wet processed; dp = dry processed; d-RDF = densified refuse-derived fuel.
[b]Estimated.

Figure 9.2-9 shows the size distribution of uncontrolled PM (flyash) from a boiler burning 50 percent coal and 50 percent RDF (heat input).[46]

9.2.4.1.3 Wood, wood waste, and bark-fired boilers. Wood and bark fuels usually have approximately 50 percent moisture, a heating value of 10,227 KJ/kg (4400 Btu/lb), and an ultimate analysis as shown in Table 9.2-10.[47] The low available energy input of the wood results from the high moisture content of the fuel. Heat energy is required to evaporate the water contained in the wood before combustion can take place. Once evaporated, the water vapor is discharged up the stack, resulting in a larger exhaust mass than would be expected from the combined air input rates.

A typical size distribution curve for uncontrolled wood fly ash emissions is shown in Figure 9.2-10.[48] Such emissions have a primary resistivity of 1.7×10^5 Ωcm (6.7×10^4 Ωin) at 204°C (400°F).[49]

Wood and bark have been burned in dutch ovens, spreader stokers, suspension-firing boilers and fluidized bed combustors.

9.2.4.1.4 Dutch ovens. Figure 9.2-11 is a cross-section of a dutch oven, which is primarily a large rectangular box lined on the sides and top with fire-brick.[50] The fuel rests on a grate through which underfire air is fed. Overfire air is introduced around the sides of the fuel pile. By design, combustion in a dutch oven or primary furnace is incomplete. Combustion products pass between the bridge wall and the drop-nose arch into a secondary furnace chamber, where combustion is completed before gases enter the heat exchange section. Construction of new dutch ovens was phased out in the 1950s because of their high construction costs, low efficiency, and inability to follow load load swings.[51]

9.2.4.1.5 Spreader stoker. Since the mid 1940s, nearly all of the wood-fired boilers constructed in the United States have been spreader stokers. The fuel is burned in the base of the water wall boiler unit rather than in a refractory chamber (Figure 9.2-12). Spreader stokers are preferred because of their ease of operation and relatively high thermal efficiency: 65-80 percent of the energy available in the fuel. Table 9.2-11 summarizes average stack parameters for typical wood/bark-fired boilers.

9.2.4.1.6 Direct firing applications. Over the past five years in the United States, nonfossil fuel-fired boilers have been installed in

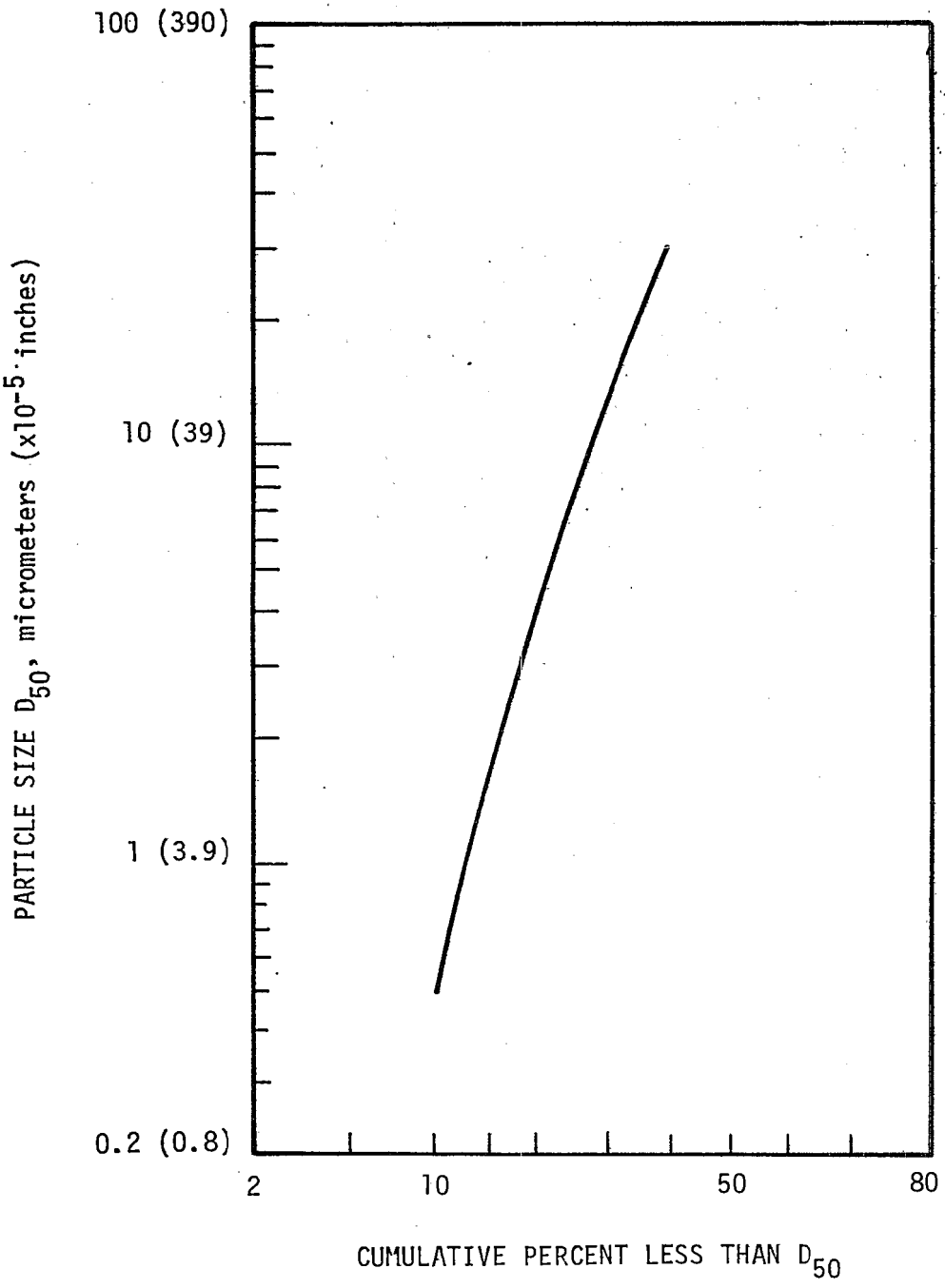

Figure 9.2-9 Flyash size distribution for a typical RDF/coal cofired boiler.[46]

Table 9.2-10. ULTIMATE ANALYSIS OF MOISTURE-FREE WOOD-WASTE FUEL[47]

Material	Percentage
Hydrogen	5.80
Carbon	52.20
Sulfur	0.05
Oxygen	40.20
Nitrogen	0.05
Ash	1.70
Total	100.00

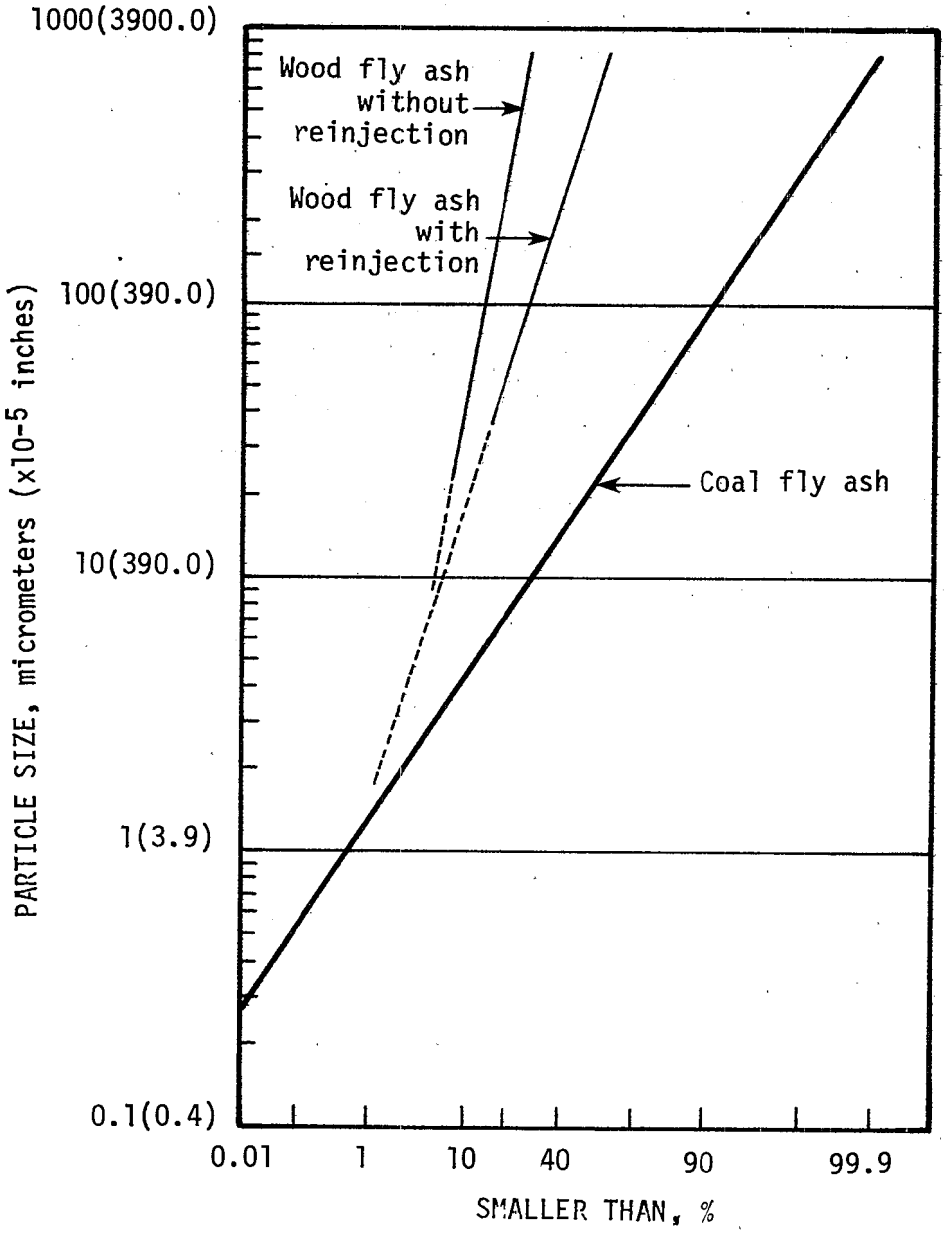

Figure 9.2-10 Size distribution of wood flyash.[48]

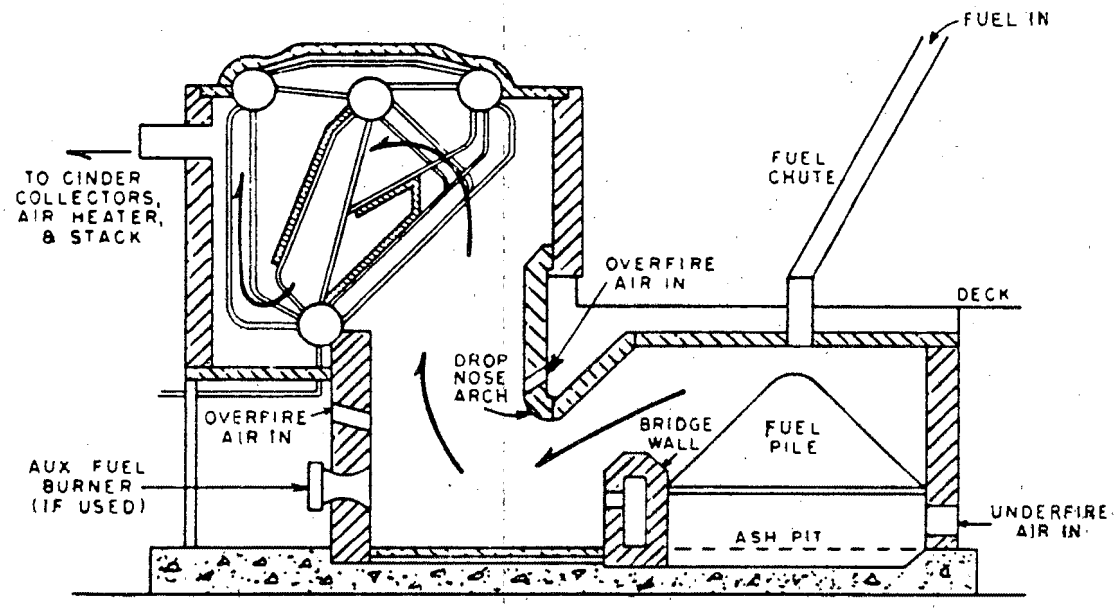

Figure 9.2-11. Dutch oven furnace and boiler.[50]

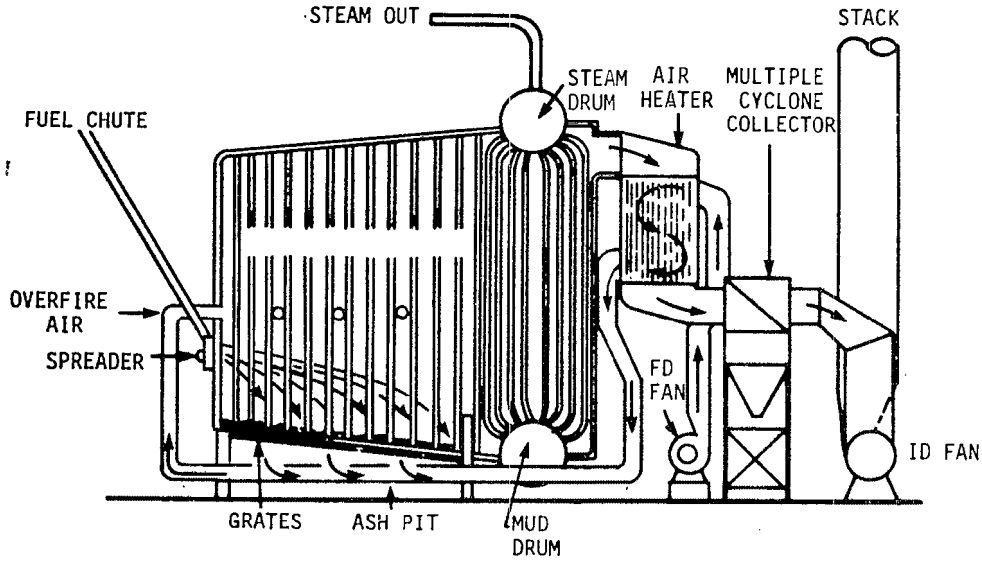

Figure 9.2-12. Small spreader-stoker furnace.[50]

Table 9.2-11. AVERAGE STACK PARAMETERS FOR TYPICAL WOOD/BARK-FIRED BOILERS[6]

Fuel fired	Size	Stack height, m	Stack diameter, m	Stack temperature, K	Flue gas volumetric flowrate, Am^3/min
Bark	All	42	2.4	470	940
Wood/bark	All	30	1.6	495	1590
Wood	All	24	1.1	445	615

which the hot gases from burning bark and wood are used directly for heat. Applications involving direct firing of wood and bark include veneer dryers, drying kilns for lumber, and dryers for wood and bark particles. (Section 9.10 discusses the forest products industry).

9.2.4.2 Applicable Control Technologies. Particulate emissions from nonfossil fuel-fired boilers have been controlled with mechanical collectors (cyclones and multiple cyclones), water scrubbers, electrostatic precipitators (ESPs), gravel bed filters (GBF), and fabric filters (baghouses). Table 9.2-12 summarizes key considerations in choosing particulate emission control devices for wood-fired boilers. The systems operating in series provide the best performance but their costs are roughly double that of single collector systems.

9.2.4.2.1 Mechanical collectors. Mechanical collectors have been used extensively for particulate control on wood- and bark-fired boilers and MSW-fired waterwall incinerators. They are often used as primary collectors ahead of other devices which collect fine particulates more efficiently. The typical relationship between particle size and cyclone collection efficiency is illustrated in Figure 9.2-13.[52] The collection efficiency of particles greater than 5 microns in diameter is good for multiple cyclones. Below this approximate diameter, the collection efficiency decreases rapidly.

Cyclones are designed to operate within a set range of inlet gas velocities. If the inlet velocity decreases below the intended range, the centrifugal force on the particles will not be great enough to separate them from the gas stream and the collection efficiency of the cyclone will decrease. This change in collection efficiency is illustrated in Figure 9.2-14 for a given cyclone and dust.[53] The velocity of the boiler exhaust gas can vary with changes in boiler load (firing rate) and excess combustion air.

9.2.4.2.2 Water scrubbers. Scrubbers have been used primarily on wood- and bark-fired boilers. They have been avoided on MSW-fired boilers because of odor and corrosion problems that result from wetting the ash from MSW.

9.2.4.2.3 Fabric filters. Baghouses have been used on two MSW incinerators and seven wood-fired boilers. The greatest detriment to applying baghouses to nonfossil-fueled boilers has been the potential for fires due to the high carbon content of the fly ash. A collection efficiency of 99.8 percent was achieved for one of the above-mentioned units operating under

Table 9.2-12. KEY CONSIDERATIONS OF PARTICULATE EMISSION CONTROL DEVICES FOR WOOD-FIRED BOILERS[50]

Collector type	Cost, $ per Am^3/min	Power required, W per Am^3/min	Pressure drop, kPa	Temp. limit, k	Expected performance		Disposal of collected particulate
					Effic., %	Outlet loading, g/Nm^3	
Single cyclone	19	17	0.25 to 0.50	819	80	0.9	Dry: landfill or charcoal
Multiple cyclone	57	25	0.38 to 0.75	810	90	0.5	Dry: landfill or charcoal
Granular bed filter	57	35	1.25	810	95	0.2	Dry: landfill or charcoal
Baghouse	77	42	0.75	530	99	0.001	Dry: landfill or charcoal
Multiple cyclone plus ESP	153	37	0.50	810	99.5	0.02	Dry: landfill or charcoal
Multiple cyclone plus dry scrubber	115	62	1.75	810	99	0.11	Dry: landfill or charcoal
Multiple cyclone plus baghouse	134	67	1.25	530	99.5	0.002	Dry: landfill or charcoal

[a]1978 dollars.

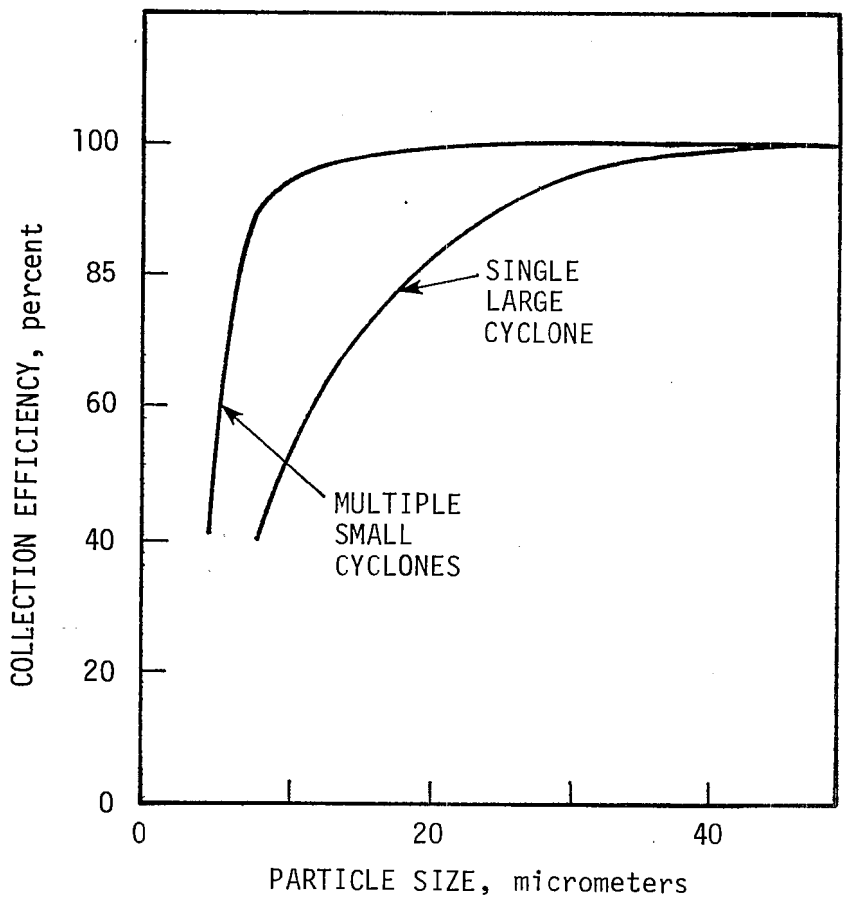

Figure 9.2-13 Typical relationships between cyclone collection efficiency and particle diameter for large and small tubes (same inlet velocity).[52]

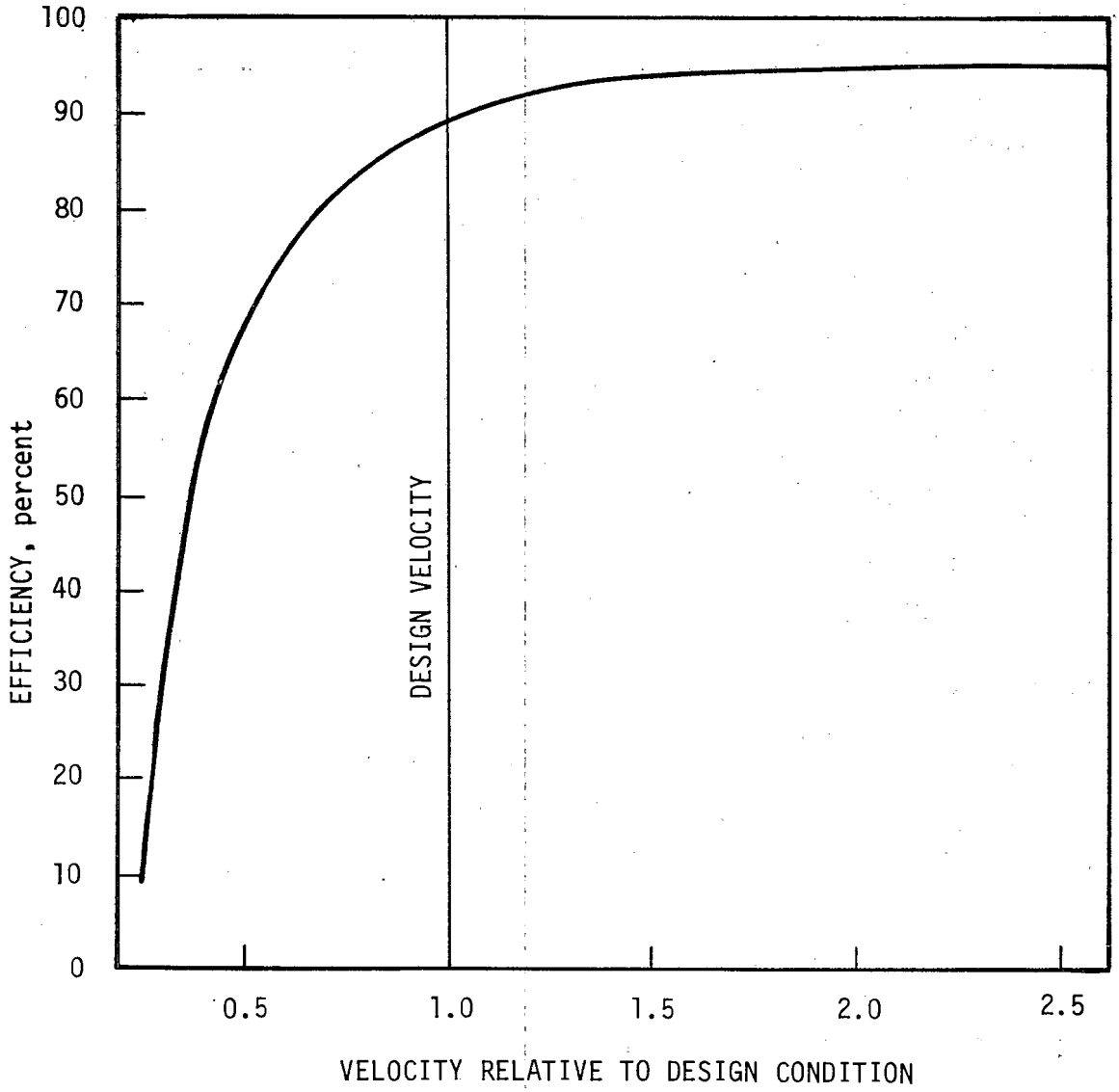

Figure 9.2-14 Variations of single cyclone collection efficiency with gas flow velocity.[53]

the following conditions:[54]

Gas flow: 85 m^3/s at 260°F

A/C ratio: 0.010 m/s

Fabric: Coated fiberglass

Average pressure drop: 0.50 to 0.75 kPa

Bags cleaned by mechanical shaking with reverse air.

Fabric filter applications to cofired or MSW-fired boilers seem particularly appropriate, since the solid waste input varies considerably. Fabric filter systems are much less sensitive to variations in fuel quality than ESPs and can perform efficiently with poorer grades of fuel.

9.2.4.2.4 Electrostatic precipitators. ESPs have been used on MSW- and RDF-fired boilers. The resistivity of RDF fly ash is very high, ranging up to 2×10^{12} Ωcm--well above the 2×10^{10} Ωcm upper limit of the range of optimum resistivities. In addition, RDF combustion requires greater excess air than does coal combustion, thus resulting in larger exhaust-gas volumes. Consequently, the collection efficiency of an ESP with RDF fly ash is lower than that of an ESP with coal fly ash. The most promising methods for improving the collection efficiency on RDF are pretreating the exhaust gas to reduce particle resistivity and designing the ESP to accept the larger exhaust volumes.[55]

Recently, ESPs have been installed on boilers that are cofired with wood or bark and coal and on boilers fired with wood and bark only. Flyash from wood-fired boilers has a resistivity that can be less than the 10^7 Ωcm lower limit for optimum particle charging and collection in an ESP. Also, wood flyash loses its charge rapidly because it is very carbonaceous and, therefore, is reentrained into the gas stream readily. An ESP designed for a wood-fired boiler would need a larger specific collection area than an ESP for a similar coal-fired boiler in order to overcome these design problems. Typical operating parameters are as follows:[54]

Gas flow: 194 m^3/s

Plate spacing: 22 cm

SCA: 27 m^2 per m^3/s

Plate area: 5,180 m^2

Migration velocity: 11 to 15 cm/s.

Figure 9.2-15 presents resistivity data for particulates from three U.S. municipal incinerators.[56] The wide variation in resistivities is due to differences in the constituents of the waste--both noncombustible matter that is emitted directly as particulates and substances which, when emitted as gaseous compounds, alter the surface conduction properties of the particles by adsorption onto them.

9.2.4.2.5 Gravel bed filters. GBFs are used on about ten wood-fired boilers. The system consists of a cylindrical vessel containing two concentric, louvered tubes. The annular space between the tubes is filled with gravel media. Particles in a dirty gas stream are removed by impaction on the gravel as the gas passes through the filter. The particulate-laden filtering media is continuously removed for cleaning from the bottom of the filter. The clean gravel is then returned to the top of the filter and recycled. In some applications, a low-energy cyclone is incorporated as an integral part of the outside wall of the filter in order to remove very large particles; this technique is particularly useful in the case of wood-fired boiler applications where coarse, carbonaceous particulate can be collected for reinjection into the boiler. A schematic of a gravel bed filter with an integral cyclone is presented in Figure 9.2-16.[57]

Variations in fuel properties or boiler load do not affect gravel bed filter performance. The simple design, the self-cleaning moving bed, and the inertness of the filter make it insensitive to fluctuations in temperature, gas flow rate, and chemical composition of the particulates. Changes in gas loading can be compensated for by regulating the recirculation rate of the filtering media. Corresponding changes in fan power will also be required.[58] Efficiencies and design parameters for a typical GBF operating in series with a mechanical collector on a hogged fuel boiler are shown in Table 9.2-13.

9.2.4.3 Secondary Environmental Impacts. All of the control technologies outlined above will result in the need to dispose of many tons of particulate matter per year. A comparison of the average properties of the flyash from coal and MSW showed the major difference to be increased concentration of the following trace elements from MSW: antimony, arsenic, barium, cadmium, chromium, copper, lead, mercury, zinc, bromine, and chlorine. The changes in the major components of the flyash are not so large that the disposal of flyash collected from the burning of MSW would pose any more of a problem than the disposal of the flyash collected from the burning of coal. (See

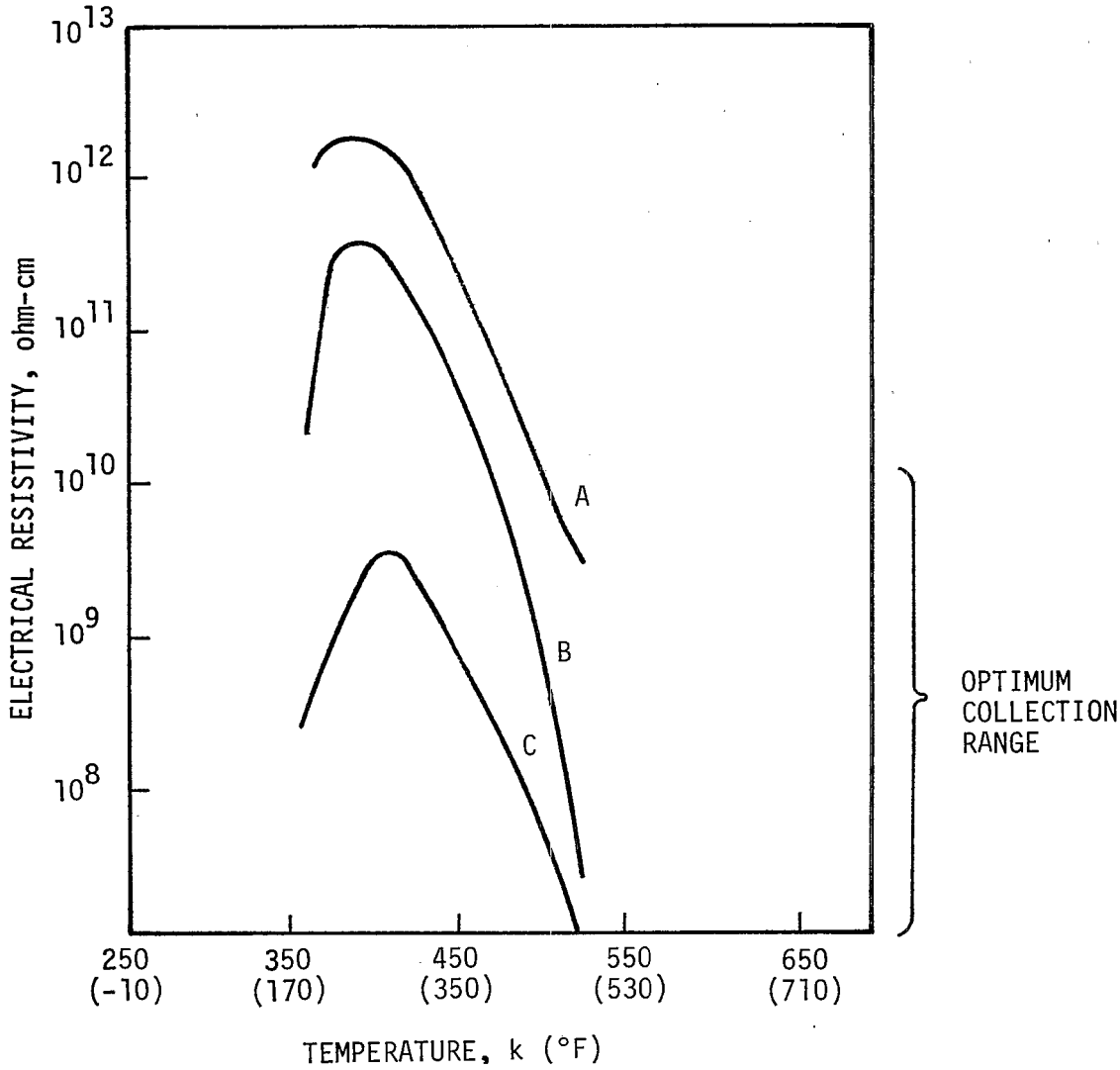

A -- SUBURBAN LOCATION, HIGH GRASS/TREE CLIPPINGS CONTENT

B -- TYPICAL URBAN DOMESTIC/COMMERICAL RESIDUE, BUT WITH HIGH PAPER CONTENT

C -- TYPICAL URBAN DOMESTIC/COMMERICAL RESIDUE

Figure 9.2-15 Electrical resistivity of flyash from three different U.S. municipal incinerators.[56]

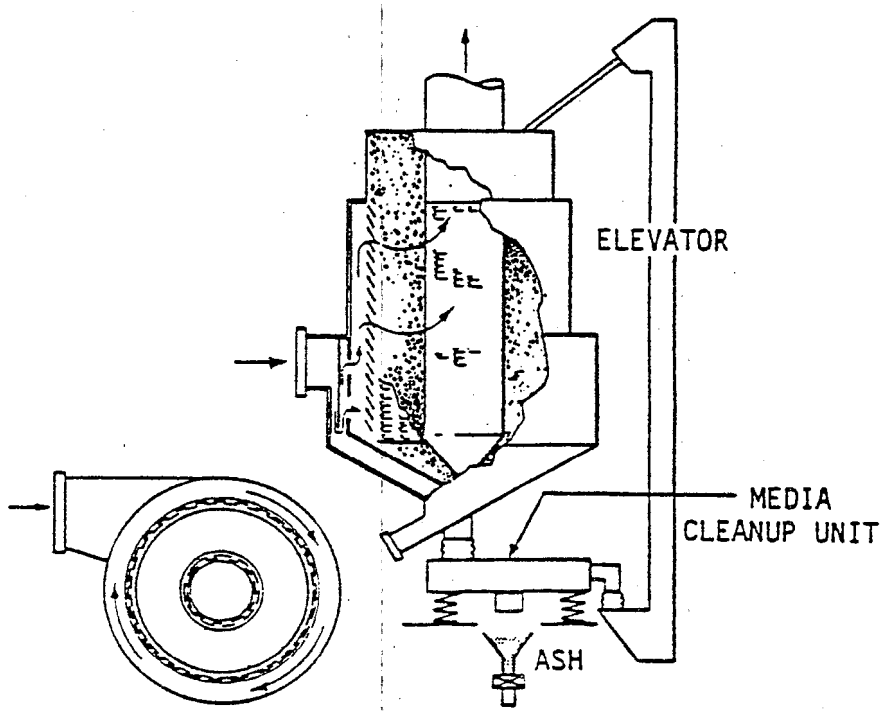

Figure 9.2-16 Schematic of integral cyclone gravel bed filter.[57]

Table 9.2-13. EFFICIENCY OF GRANULAR BED FILTERS IN SERIES WITH CYCLONES ON HOGGED FUEL BOILERS[50]

Media size, cm	Media gas velocity, cm/sec	Media pressure drop, kPa	Cyclone pressure drop, kPa	Total Loading, g/Nm^3 at 12% CO_2			Collection efficiency, %		
				Cyclone in	Media in	Media out	Cyclone	Media	Total
0.6 x 0.3	64.5	1.5	0.3	2.768	0.875	0.075	68.4	91.4	97.3
0.6 x 0.3	86.4	2.3	0.5	1.486	0.609	0.080	59	86.9	94.6
15 x 20	76.2	3.0	0.4	2.542	0.800	0.070	68.5	91.3	97.3
15 x 20	63.5	2.4	0.3	4.719	0.618	0.026	86.9	95.7	99.4

Section 9.2.1.3 for the secondary environmental impact of control techniques for pulverized coal firing.) The changes in trace element concentration might result in leaching problems if the collected flyash is placed in a landfill, but no assessment of the relative impacts has been made.[49]

Potential water impacts arise when sluicing water is used to carry the collected flyash to settling ponds. In comparing coal-only to coal-MSW firing data for the ash pond water, only total dissolved solids increased with the burning of MSW. Analysis for trace constitutents showed little change for coal-MSW sluice water compared to coal-only water.[59]

9.2.5 Oil-Fired Utility Boilers

During 1977 about 21 percent of total fossil-fuel electric power was generated with oil-fired steam generators.[1] Residual fuel oil is the predominant fuel used in oil-fired utility steam generators.[1] Some distillate oil is blended with the residual oil to meet specifications. Distillate oil also is used for startup of coal-fired steam generators.[1] Nationwide emissions from oil-fired electric utility boilers in 1978 were estimated at 140 gigagrams.[2]

9.2.5.1 Source Description. All oil-fired utility boilers are of watertube design, i.e. water flows through the heat transfer tubes. The typical furnace is of waterwall design, backed by refactory or insulation. The tubes, which form the furnace waterwall, are an integral part of this boiler. Oil-fired utility boilers are similar to pulverized coal units, except for burners and equipment to handle fly ash and bottom ash. Since the inorganic ash content is much lower with oil than coal, soot blowing needs are less severe and flyash collection and disposal systems handle considerably lower volumes.

The primary firing methods for oil-fired utility boilers are as follows:

- Single-wall firing, in which a bank of burners mounted on a plane wall ejects fuel in one direction only.
- Opposed firing, in which two banks of burners are directed toward one another.
- Tangential firing, in which the burners are located at the corners of a square and eject oil in such a direction as to give a rotational motion to the combustible mixture.

Common burner designs employ steam, air, or mechanical atomization. Air atomization apparently leads to more complete combustion than steam, and steam provides more complete combustion than mechanical atomization.[60]

9.2.5.2 Emission Characteristics and Applicable Control Technologies. Particulate emissions from utility boilers are generally a function of boiler size. Measurements indicate that the average particulate emission levels from a sample of uncontrolled boilers decreased from 36.6 ng/J to 19.4 ng/J as the boiler size went from 1 to 500 MW. Emissions from the newer, larger boilers are lower than those from older units because of improved combustion controls. Selected stack parameters for oil-fired utility boilers are presented in Table 9.2-14.

On a mass basis, particulate emissions from an uncontrolled residual oil-fired boiler are on the same order of magnitude as those from a highly controlled coal-fired boiler. Stack tests indicate that between 85 and 90 weight percent of the particles liberated by uncontrolled residual oil combustion are less than 1 micrometer in diameter; usually less than 10 percent of the particles liberated by coal combustion are smaller than 1 micrometer.[21,61]

Finally, the size and mass of particles emitted varies with boiler maintenance. If a boiler is well-maintained and properly adjusted, there will be little carbonaceous matter released; emissions will consist almost entirely of inorganic ash particles, a substantial portion of which will be less than 1 micrometer in diameter. However, it is common to find poorly maintained oil-fired boilers whose emissions are dominated by larger particles.

Four types of particulate matter collectors are available for controlling emissions: electrostatic precipitators, mechanical collectors, fabric filters, and wet scrubbers. Of these, only the ESP and the multiple cyclone (one type of mechanical collector) are used to any degree at oil-fired facilities.[62] Fabric filters and wet scrubbers are seldom used.

9.2.5.2.1 Electrostatic precipitators. ESPs are the most common collectors now in use on oil-fired boilers. Normally, they are designed to remove about 90 percent of particulates by weight.[63,64,65]

Precipitators that were originally designed to collect coal flyash experience a marked drop in efficiency when the boiler is fired with oil.[62,66]

Table 9.2-14. SELECTED STACK PARAMETERS OF OIL-FIRED UTILITY AND INDUSTRIAL BOILERS[25]

Fired fuel	Size, MW	Stack height, m	Stack diameter, m	Stack temperature, K	Flue gas volumetric flowrate, Am^3/min
Residual	Greater than 29.3	48	2.9	470	6070

Changes in mass loading particle resistivity, size distribution, and surface properties are the primary reasons for this reduction. Units which were installed on coal-fired boilers require modification if the boiler is converted to oil.

More extensive data on electrostatic precipitators applied to oil-fired steam generators are given in Reference 67.

9.2.5.2.2 Mechanical collectors. Typical efficiencies of mechanical collectors are only 75 to 85 percent for particles 10 micrometers in diameter or larger.[64] Their efficiency is much lower for submicrometer particles generated by oil furnaces. Mechanical collectors are ineffective on oil burning units even if all burners are properly maintained and adjusted. Small particles account for more than one-half of particulate emissions by weight from well maintained sources.[63,68,69,70] If acid smut (which is composed mostly of large particles) is a major pollution problem, mechanical collectors are sometimes used. With older units, mechanical collectors are sometimes employed, primarily to collect large particulates released during soot blowing.[62]

9.2.5.2.3 Fabric filters. Only one full-scale fabric filter system is known to have been installed on an oil-burning utility boiler.[62] Many problems were encountered when the baghouse was in service, the most prominent being the deterioration of the bags by the acidic oil and ash, and plugging of the bags due to the hygroscopic nature of the oil ash.[64] Explosion hazards are also possible.

9.2.5.2.4 Wet scrubbers. In the U.S., flue gas desulfurizer (FGD) wet scrubbers are used by utility operators mainly for sulfur oxide removal at coal-fired boilers. In Japan, FGD units have been used to control SO_2 and particulates from oil-fired boilers.

Some wet scrubbers under development have shown removal efficiencies of greater than 99 percent by weight during pilot and prototype programs.[70] Wet scrubbers are capable of providing highly efficient removal of particulate matter from flue gases, but there are the following potential problems:[62,70]

- High draft loss, up to 15 kPa for higher efficiencies resulting in higher power requirements.
- Moist and cooled exit gas, potentially leading to corrosion of downstream equipment, visible vapor plumes and reduced buoyancy at the stack.

- Generation of scrubber slurries (the bulk of which, however, are sulfur wastes, not ash from fuel oil).

Therefore, even though scrubbers can be used efficiently to remove particulate emissions from oil-fired boilers, they are not widely employed.

9.2.5.3 Secondary Environmental Impacts. The amount of flyash collected from oil-fired utility boilers will be less than that for coal-fired utility boilers. Section 9.2.1.3 discusses in greater detail the secondary environmental impacts of the control techniques for coal-fired boilers.

9.2.6 Oil-Fired Industrial/Commercial Boilers

Emissions from oil-fired industrial/commercial boilers vary over a wide range, depending on the size of the boiler and the type of fuel burned.[5] Except for combustion modifications and proper maintenance, controls for commercial sized oil-fired boilers are seldom used.

9.2.6.1 Source Description. Commercial boilers may be categorized as cast iron, firetube, or watertube types; industrial boilers are exclusively firetube or watertube types. Cast iron sectional units are designed to supply low pressure steam or hot water and are used primarily for hydronic heating.[62] These boilers consist of an assembly of cast iron sections. Generally, cool water enters at the bottom of the sections, and hot water or steam exits at the top. Figure 9.2-17 illustrates an oil-fired cast iron boiler. In a firetube boiler, the products of combustion are directed through tubes which are submerged in water. Firetube boilers are used when steam demand is relatively small.

9.2.6.2 Emission Characteristics and Applicable Control Technologies. Emissions vary with the size of the boiler and the oil atomization technique. As with any oil-fired boiler, particulate emissions are hygroscopic and relatively light (one-quarter the weight of pulverized coal ash); therefore, they tend to plug particulate emissions control devices and pack if stored in hoppers. Table 9.2-15 presents selected stack parameters for oil-fired industrial/commercial boilers.

An important parameter in controlling particulate emissions is the amount of swirling motion impacted to the gases in the combustion region.[71,72,73] There is an optimum value of swirl that yields low particulate emissions. Other aerodynamic factors influencing particulate emission include recirculation in the gas flow and relative air/fuel velocity.

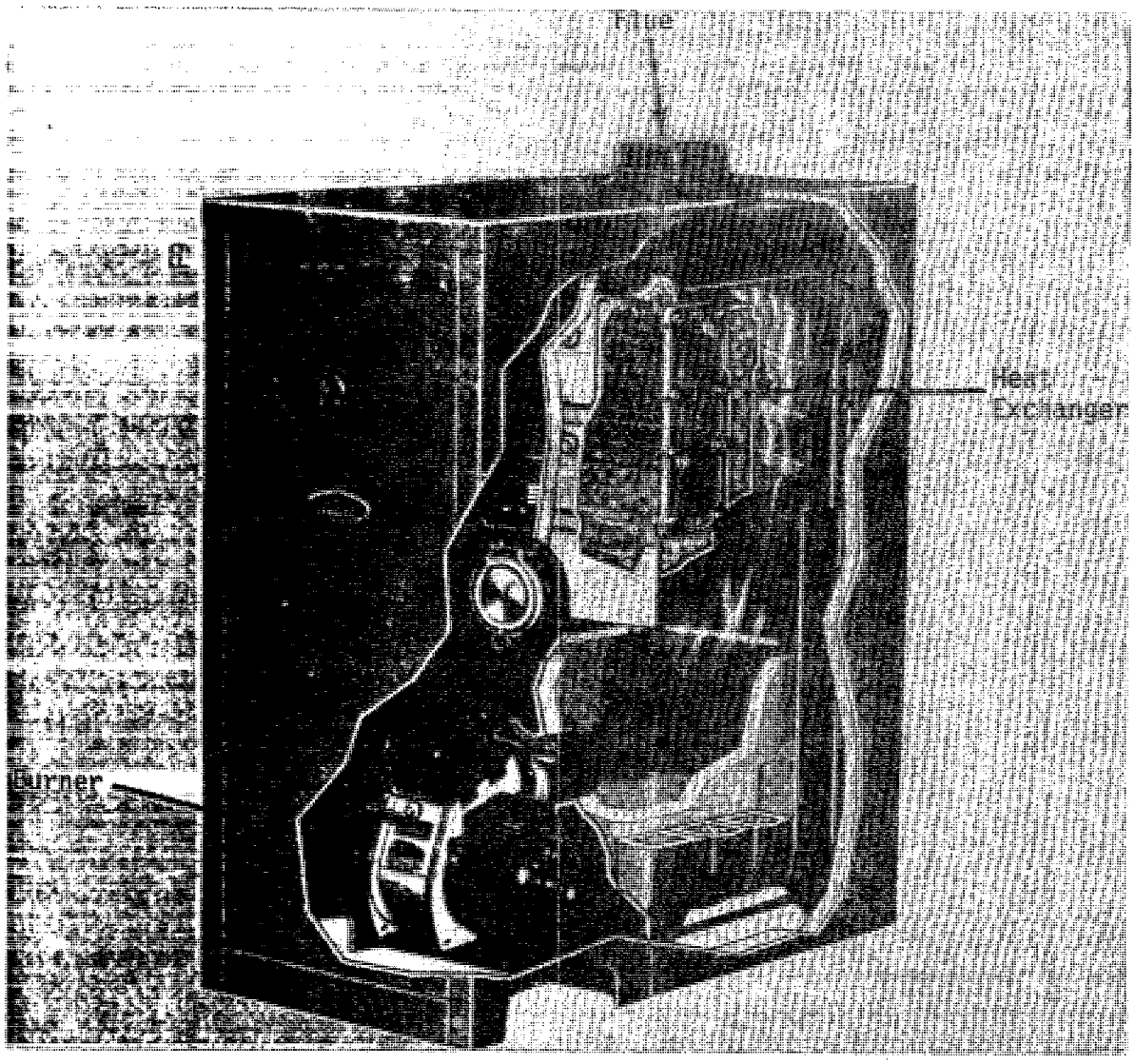

Figure 9.2-17 Oil-fired cast iron boiler. (Courtesy of the Utica Radiator Company.)

Table 9.2-15. SELECTED STACK PARAMETERS FOR OIL-FIRED INDUSTRIAL/COMMERCIAL BOILERS[6]

Fuel fired	Size, MW	Stack height, m	Stack diameter, m	Stack temperature, K	Flue gas volumetric flowrate, Am^3/min
Residual oil	2.9-29.3	27	1.5	500	730
	less than 2.9	21	0.9	470	380
Distillate oil	2.9-29.3	20	1.2	490	705
	less than 2.9	13	0.7	475	175

Although dust collectors can be used to control commercial units, they are not used generally. One study has shown that dust collectors can be effective in reducing emissions from some commercial boilers, but the investigation did not report the condition of the burners, or the attention paid by the operator to the control device.[74]

Additives containing certain alkaline-earth and transition metals in residual oils reportedly are effective in reducing carbon particulate by as much as 90 percent.[75] Similar reduction can be achieved with good burner design and adjustment, but for certain commercial and industrial boilers operating in the field that cannot receive the maintanence service needed to reduce emissions, additives may be an effective particulate control technology.

Particulate emission control technologies for industrial oil-fired boilers are virtually identical to those for oil-fired utility boilers. These technologies include electrostatic precipitators, fabric filters, scrubbers, and mechanical collectors. The efficiencies of these collectors would be roughly the same for industrial and utility boilers.

9.2.6.3 Secondary Environmental Impacts. The secondary environmental impacts of particulate emissions control technology applied to oil-fired industrial/commercial boilers are very similar to those of oil-fired utility boilers. Section 9.2.5.3 contains further discussion of these impacts.

Environmental health considerations make the use of fuel additives in commercial and industrial boilers questionable because the additives create more potentially harmful new emissions.

REFERENCES FOR SECTION 9.2

1. Steam Electric Plant Factors 1978. National Coal Association. Washington, DC. 1978.

2. U.S. Environmental Protection Agency, Office of Air Quality Planning and Standards, National Air Data Branch. Research Triangle Park, NC. 1980.

3. Stationary Watertube Boiler Sales, 1976. American Boiler Manufacturers Association. Arlington, VA. 1977.

4. Steam - Its Generation and Use, 38th Edition. Babcock and Wilcox Co. New York, NY. 1975.

5. Background Information for Proposed Particulate Matter Emission Standards, NSPS. U.S. Environmental Protection Agency. Publication No. EPA-450/2-78-006a. July 1978.

6. National Emission Data System (Source Classification Codes). U.S. Environmental Protection Agency. Research Triangle Park, NC.

7. Niessen, W. R. Combustion and Incineration Processes - Applications in Environmental Engineering. Marcel Dekker, Inc. New York, NY. 1978.

8. Review and Assessment of the Existing Data Base Regarding Flue Gas Cleaning Wastes. Electric Power Research Institute. Palo Alto, CA. EPRI FP-671, Project 786-2, Volumes 1 and 2. January 1979.

9. Coltharp, W. M., et al. Review and Assessment of the Existing Data Base Regarding Flue Gas Cleaning Waste. EPRI FP-671, Volume I. Radian Corporation. Austin, TX. January 1979.

10. Reigel, S. A., and R. P. Bundy. Why the Swing to Baghouses. Power. January 1977.

11. The ESP Manual, Volumes 1 and 2. The McIlvanie Co. Northbrook, IL.

12. Particulate and Sulfur Dioxide Emission Control Costs for Large, Coal-Fired Boilers. PEDCo Environmental, Inc. U.S. Environmental Protection Agency. Publication No. EPA-450/3-78-007. February 1978.

13. The Fabric Filter Manual. The McIlvanie Co. Northbrook, IL.

14. The Scrubber Manual. The McIlvanie Co. Northbrook, IL.

15. Fine Particulate Emissions Information System: Annual Report (1978). U.S. Environmental Protection Agency. Publication No. EPA-600/7-79-126. May 1979.

16. Guidelines for Determining Best Available Retrofit Technology for Coal-Fired Power Plants and Other Existing Stationary Facilities. National Technical Information Source. Springfield, VA.

17. Hart, F. C., and B. T. Delaney. The Impact of RCRA (PL 94-58) on Utility Solid Wastes. Fred C. Hart Associates, Inc. New York, NY. Publication No. 78-779. August 1978.

18. Dvorak, A. J., et al. Impacts of Coal-Fired Power Plants on Fish, Wildlife, and Their Habitats. U.S. Department of the Interior. Publication No. FWS/OBS-78/29. March 1978.

19. Devitt, T., et al. The Population and Characteristics of Industrial/ Commerical Boilers. PEDCo Environmental, Inc. May 1979.

20. Lim, K. J., et al. Environmental Assessment of Industrial Boiler Combustion Modification NO_x Controls. Acurex Corporation. Mt. View, CA. Publication No. TR-79-10/EE. July 1979.

21. State of the Art: Oil-Fired Precipitator Applications. Research Cottrell, Inc., Air Pollution Control Division. Bound Brook, NJ.

22. Roeck, D. R., and R. Dennis. Technology Assessment Report: Assessment of Particulate Collection Technology for an Industrial Boiler New Source Performance Standard. GCA Corporation, Technology Division. Bedford, MA. Draft Final Report. June 1979. p. 51.

23. Gard, Inc. Capital and Operating Costs of Selected Air Pollution Control Systems. U.S. Environmental Protection Agency. Publication No. EPA-450/3-76-014. May 1976.

24. Draft of Fossil Fuel Fired Industrial Boilers - Background Information for Proposed Standards, Chapters 3 and 5, and Appendix C. U.S. Environmental Protection Agency, Emission Standards and Engineering Division. Research Triangle Park, NC. July 1980.

25. Horzella, T. I. Selecting, Installing, and Maintaining Cyclone Dust Collectors. Chemical Engineering Journal. January 1978.

26. Electric Power Research Institute test data reported in the "Precip Newsletter." The McIlvanie Co. Northbrook, IL. Number 21. October 20, 1977.

27. Surprenant, N. F., et al. Preliminary Emissions Assessment of Conventional Stationary Combustion Systems, Volume II, Final Report. U.S. Environmental Protection Agency. Publication No. EPA-600/2-76-046b. March 1976.

28. Lim, K. J., et al. Environmental Assessment of Utility Boiler Combustion Modification NO_x Controls. Acurex Corporation. Mt. View, CA. Publication No. TR-78-105. April 1978.

29. Standards Support and Environmental Impact Statement, Volume I: Proposed Standards of Performance for Lignite-Fired Steam Generators. U.S. Environmental Protection Agency. Publication No. EPA-450/2-75-030a. October 1976.

30. Ctvrtnicek, T. E., and S. J. Rusek. Applicability of NO_x Combustion Modifications to Cyclone Boilers (Furnaces). U.S. Environmental Protection Agency. Publication No. EPA-600/7-77-006. January 1977.

31. Compilation of Air Pollution Factors, Second Edition. U.S. Environmental Protection Agency. Publication No. EPA-AP-42. August 1977.

32. Feasibility Study for a National Wood Energy Data Base, Final Report. Ultrasystems Incorporated. McLean, VA. (U.S. Department of Energy, Contract No. EI-78-2-01-1951.) September 1978. p. 5.

33. Wood Waste for Fuel. Engineering Times. National Society of Professional Engineers. Washington, DC. September 1979.

34. Resource Recovery Activities. In: NCRR Bulletin, National Center for Resource Recovery, Incorporated. Washington, DC. March 1979.

35. Plehn, S. W. RCRA Leads Attack on Solid Waste Problems. Consulting Engineer. March 1979. p. 86.

36. Memo from Blackwell, C. D., Acurex Corporation, to Acurex Nonfossil-Fueled Boiler file. October 31, 1979. Combustion calculations for general solid waste boilers.

37. DeMarco, J., D. J. Keller, J. Lechman, and J. L. Newton, Municipal-Scale Incinerator Design and Operation. U.S. Department of Health, Education, and Welfare. Washington, DC. Publication No. 2012. 1969. p. 6.

38. Bozeka, C. G. Nashville Incinerator Performance Tests. Babcock and Wilcox Company. North Canton, OH. 1976. p. 221-227.

39. Reference 38 above, p. 227.

40. Frounfelker, R. A Technical, Environmental, and Economic Evaluation of Small Modular Incinerator Systems with Heat Recovery. Systems Technology Corporation (SYSTECH). Xenia, OH. (U.S. Environmental Protection Agency, Contract No. 68-01-3889.) 1979. p. 13.

41. Evaluation of Small Modular Incinerators in Municipal Plants. Ross Hofman, Associates. Coral Gables, FL. (U.S. Environmental Protection Agency, Contract No. 68-01-3171). 1976. p. 7.

42. Compliance Test for Particulate Emissions, Garbage Incinerator System with Energy Recovery. Hayes, Seay, Mattern, and Mattern. Roanoke, VA. (City of Salem, VA.) March 1979. p. 13.

43. Hall, E.H., et al. Refuse Combustion in Fossil Fuel Steam Generators. Battell-Columbus Laboratories. Columbus, OH. (U.S. Environmental Protection Agency, Contract No. 68-02-0611.) September 1974.

44. Niemeyer, W., and T. C. Derbidge. Investigation of Waste-Fired Industrial Steam Generators. Acurex Corporation. Mt. View, CA. (U.S. Environmental Protection Agency, Contract No. 68-02-26711.) September 1978. pp. 2-16, 2-17, 2-18.

45. Reference 44, pp. 2-18, 2-21.

46. Hall, J. L., et al. Evaluation of the Ames Solid Waste Recovery System: Refuse Processing Plant and Stoker-Fired Steam Generators. U.S. Environmental Protection Agency. Cincinnati, OH. EPA Grant No. R803903-01-0. February 1978. p. 211.

47. Hall, E. H., et al. Comparison of Fossil and Wood Fuels. Battelle-Columbus Laboratories. Columbus, OH. U.S. Environmental Protection Agency, Contract No. 68-02-1323. Publication No. EPA-600/2-76-056. March 1976. p. 39.

48. Reference 47, p. 63.

49. The Electrostatic Precipitator Manual, Volume III. The McIlvanie Company. Northbrook, IL. October 1977. p. 92.

50. Boubel, R. W. Control of Particulate Emissions from Wood-Fired Boilers. U.S. Environmental Protection Agency. Publication No. EPA-340/1-77-026. 1977.

51. Junge, D. C. Boilers Fired with Wood and Bark Residues. Plywood Research Foundation. Tacoma, WA. Research Bulletin 17. November 1975. p. 2.

52. Boubel, R. W. Control of Particulate Emissions from Wood-Fired Boilers. PEDCo Environmental, Inc. EPA Publication No. EPA-340/1-77-026, NTIS PB-278 483. 1977. p. 6-6.

53. Stern, A. Air Pollution, 3rd Edition, Volume IV. Engineering Control of Air Pollution. Academic Press. New York, NY. p. 117.

54. Devitt, T. W., et al. Air Pollution Emissions and Control Technology for Waste-As-Fuel Processes. PEDCo Environmental, Inc. February 1979.

55. Reference 54, p. 92.

56. Walker, A., and F. Schmitz. Characteristics of Furnace Emissions from Large, Mechanically Stoked Municipal Incinerators. In: Proceedings of the 1966 National Incinerator Conference. New York, NY. May 1966.

57. Reese, R., and D. Marsh. An Update of Dry Scrubber Utilization and On-Line Test Results. In: Proceedings of the 1978 TAPPI Environmental Conference. Washington, DC. April 1978. p. 47.

58. Reference 22, p. 51.

59. Gorman, P., et al. St. Louis Demonstration Project Final Report: Power Plant Equipment, Facilities, and Environmental Evaluations. U.S. Environmental Protection Agency. Publication No. EPA-600/2-77-155b. December 1977.

60. McGarry, F. J., and C. J. Gregory. A Comparison of the Size Distribution of Particles Emitted from Air, Mechanical, and Steam Atomized Oil Fired Burners. Journal of the Air Pollution Control Association. 22:8. August 1972.

61. Vandegrift, A. E., et al. Particulate Pollutant Systems Study. Midwest Research Institute. Publication No. APTD 0743.

62. Offen, G. R., et al. Control of Particulate Matter from Oil Burners and Boilers. U.S. Environmental Protection Agency. Publication No. EPA-450/2-76-005. April 1976.

63. Hartshorn, W. T. Electrostatic Dust Collection from Oil-Fired Boilers. TAPPI. 56:6. June 1973.

64. Bagwell, F. H., and R. G. Velte. New Developments in Dust Collecting Equipment for Electric Utilities. Journal of the Air Pollution Control Association. 21:12. December 1971.

65. Pinheiro, G. Precipitators for Oil-Fired Boilers. Power Engineering. 75:4. April 1971.

66. Sahagian, J., R. Dennis, and N. Surprenant. Particulate Emission Control Systems for Oil-Fired Boilers. U.S. Environmental Protection Agency. Publication No. EPA-450/3-74-063.

67. Study of Electrostatic Precipitators Installed on Oil-Fired Boilers. Electric Power Research Institute. Palo Alto, CA. EPRI FP-792, Project 413-1, Task 1.4, Volume 2, Final Report. June 1978.

68. Higgins, R. S., et al. Experience in the Use of Brown Coals from the Latrobe Valley, Australia. (Presented at Technology of Use of Lignite Proceedings: Bureau of Mines. University of North Dakota, Symposium. Grand Forks, ND. May 9-10, 1973.) IC-8650.

69. Fernandes, J. H., et al. Boiler Emissions and Their Control. (Presented at Conference on Air Pollution Control. Mexico City. April 28, 1976.)

70. Burdock, J. L. Centrifugal Collectors Control Particulate Emissions from Oil-Fired Boilers. TAPPI. 56:6. June 1973.

71. Safford, D. E. Burner Changes vs. Fuel Changes. Hydrocarbon Processing. 49:2. February 1970.

72. Schreter, R. E., et al. Industrial Burners - Today and Tomorrow. Mechanical Engineering. June 1970.

73. Drake, P. F., and E. H. Hubbard. Combustion System Aerodynamics and Their Effects on the Burning of Heavy Fuel Oil. Journal of the Institute of Fuel. 39:302. March 1966.

74. Robison, E. B. Applications of Dust Collectors to Residual Oil-Fired Boilers in Maryland. Maryland Bureau of Air Quality Control. Publication No. BAQC-TM-74-15. December 1974.

75. Giammar, R. D., et al. The Effects of Additives in Reducing Particulate Emissions from Residual Oil Combustion. (Presented at Symposium on Stationary Source Combustion. U.S. Environmental Protection Agency. Atlanta, GA. September 24-26, 1976.)

Page Intentionally Blank

9.3 REFUSE INCINERATORS

Refuse incinerators are furnaces that burn wastes. In addition, they do not recover usable heat. This failure to recover heat in the form of steam and/or hot water generation distinguishes incinerators from nonfossil-fueled boilers (NFFB) and other heat recovery equipment using heat transfer principles to recover heat from combustion gases. Hot water generators and process heaters are examples of non-NFFB heat recovery equipment that can use wastes as fuel.

Refuse incinerators discussed in this section are categorized as municipal incinerators, industrial and commercial incinerators, and sludge incinerators. Table 9.3-1 presents uncontrolled and controlled emissions data and emission factors for all types of refuse incinerators.[1,2] This table is referenced throughout Section 9.3.

9.3.1 Municipal Incinerators

Municipal incinerators may be classified as large or small units. Large municipal incinerators (processing greater than or equal to 45 megagrams of refuse per day) are declining in use for the following reasons:

- The increased cost of construction or upgrading existing incinerators to meet pollution regulations makes other waste disposal options more attractive.
- Resource recovery systems and new technologies for thermal processing of municipal wastes are being developed. These developments include pyrolysis, gasification, and municipal waste utilization in nonfossil-fueled and utility boilers and other heat recovery equipment.

Approximately 60 large municipal incinerators were in service as of October 1979.[3] These units were concentrated in the Northeast and Midwest.

Small municipal incinerators (less than 45 megagrams per day), on the other hand, have grown steadily in importance from 1972 through 1978. Their population at the end of 1978 was 78 units, with a substantial number projected to be built through 1985. However, many of these projected units may be NFFB since they will incorporate boiler-type heat recovery methods.[4]

Table 9.3-1. SUMMARY OF PARTICULATE EMISSION TEST DATA FROM INCINERATORS[1]

Source	No. of sources tested	Uncontrolled emissions, kg/Mg feed [mean]	Emission factor,[2] kg/Mg	Controlled emissions, kg/Mg feed [mean]
Municipal incinerators	13	0.2 - 19.5 [5.8]	7.5 - 15.0	0.37 - 0.91 [0.48]
Pathological incinerator	37	0.52 - 16.3 [3.11]	4.0	0.05 - 17.1 [2.98]
Multiple-hearth sewage sludge	5	no data	50.0	0.14 - 2.0 kg/Mg dry sludge [0.84]
Fluidized-bed burning sewage sludge	4	no data	50.0	0.35 - 2.8 [1.3]
Other incinerator designs burning sewage or industrial sludge	3	1.3 - 7.3[c]	50.0	0.09 - 3.3 [0.86]
Trash incinerators	64	0.06 - 4.05 [0.67]	3.5 - 7.5	0.35 - 1.0 [0.62]
Cotton gin waste incinerator	1	4.38 - 9.84 [6.72]	3.5 - 7.5	9.25 - 12.7 [11.5]
Liquid waste	5	4.15 - 7.63 [5.8]	3.5 - 7.5	0.0 - 9.72 [2.91]
Paint racks	1	0.10 g/m^3	3.5 - 7.5	
Film	1	3.1	3.5 - 7.5	
Wood scrap	2 1	0.06 g/m^3	3.5 - 7.5	0.07 g/m^3[a]
Paper drums[b]	1	0.41 g/m^3	3.5 - 7.5	

[a]Wet spray collector, a low efficiency collection device.
[b]Paper drums burned with smokeless powder and activated charcoal.
[c]Mean not available.

The reasons for the popularity of small municipal incinerators are low cost, relative simplicity, and relatively easy pollution control requirements. Most small municipal incinerators are located in the South and Northeast.[4]

Total particulate emissions from all municipal incinerators have been estimated at 34 Gg for 1977.[5] This value may include emissions from boilers burning mixed municipal refuse.

9.3.1.1 Source Description. Several furnace designs can be used for municipal incinerators. These furnace designs utilize grates and combustion chambers in a variety of configurations. While no design can be considered best, certain configurations are more suitable for combusting wastes with specific characteristics.

Furnace varieties commonly used for combusting municipal wastes include: vertical circular, multicell rectangular, rectangular, and rotary kiln. These furnace types are normally designed for heat release rates of approximately 680 MJ per hour per cubic meter of furnace volume. Heat release rates can vary from 470 to 940 MJ per hour per cubic meter. Details on these types of municipal incinerator furnaces are given below.

9.3.1.1.1 Vertical circular furnaces. The vertical circular furnace is usually a refractory lined, circular chamber. Solid waste is charged through a gate or lid in the upper part (usually the ceiling) and drops onto a rotating, central cone grate which is surrounded by a stationary circular grate. The primary combustion air is underfire forced-air which also serves to cool the grates. Rabble arms extend from the cone grate and, as the cone rotates slowly, agitate the solid waste bed. Residue is displaced to the sides where it is discharged, manually or mechanically, through a dumping grate on the periphery of the stationary circular grate. Stoking doors provide for manual agitation and assistance in residue dumping, if necessary. Overfire air is usually introduced into the upper portion of the circular chamber.

9.3.1.1.2 Rectangular furnaces. The rectangular furnace is the most common modern furnace for municipal waste disposal. Several grate systems are adaptable to the rectangular furnace. Two or more grates are usually arranged in tiers to agitate the solid waste as it drops from one level to the next. Each furnace has only one charging chute. Secondary combustion of gases often occurs in the rear of the furnace behind a curtain wall. This

wall also radiates heat toward the charging grate (the first grate upon which the waste drops) to augment drying, promote ignition, and increase combustion gas velocity and the level of turbulence.

The multicell rectangular furnace may be water-cooled or refractory lined; it is also known as a mutual assistance furnace. Two or more furnace cells, each with rectangular grates, are arranged side-by-side. These cells are ordinarily connected to a common secondary combustion chamber and residue disposal hopper. Solid waste is charged through openings in the top of each cell.

9.3.1.1.3 Rotary kiln furnaces. The rotary kiln furnace is a slowly revolving inclined kiln into which the waste is fed after it has been dried and partially burned in a rectangular chamber. Tumbling action in the kiln exposes unburned material to additional burning. Upon exiting the kiln, combustion gases and entrained particulate matter are then burned in a mixing chamber. Ash falls from the end of the kiln into a quench trough and is mechanically removed.

9.3.1.2 Emission Characteristics and Applicable Control Technology. The quantity, size distribution, and composition of particulate emissions from municipal incinerators varies widely depending on furnace design, type of refuse fired, method of feeding, operating procedures, and completeness of combustion. The important properties of particulate matter, from the standpoint of control equipment design, are mass loading, particle size distribution, specific gravity, electrical resistivity, and chemical composition. These properties are detailed for a number of installations in References 6 and 7. Average stack parameter data for single and multiple chamber municipal incinerators are presented in Table 9.3-2.[8]

Optimum control of incinerator particulate emissions begins with proper furnace design and careful operation. A proper design includes: (1) a furnace/grate system appropriate to the waste, (2) an adequate combustion gas retention time and velocity in the secondary combustion chamber, (3) a suitable underfire and overfire air system, and (4) appropriate construction materials to maintain temperatures with minimal auxiliary fuel.[9] Operational procedures used to minimize particulate emissions include: (1) using furnace loading rates appropriate to the waste type, (2) maintaining proper temperature, (3) supplying combustion air in sufficient volume and velocity, and

Table 9.3-2. MUNICIPAL INCINERATOR STACK PARAMETER DATA[3]

Emission sources	Single chamber	Multiple chamber
Number of sources	277	209
Average stack height, m	12.8	33.2
Average stack diameter, m	0.731	1.95
Average temperature, °C	520.6	312.8
Average gas flowrate, Am^3/s	7.91	28.1
Average annual quantity burned, Gg/incinerator	5.58	28.8

Caution: The total number of municipal incinerators in this table (486 units) varies considerably from the total number of large and small municipal incinerators (approximately 140 units) identified in References 3 and 4, respectively.

The difference may be that the NEDS data (Reference 8) used for this table is older and does not reflect the decline in the municipal incinerator population over the past few years, and units capable of some form of boiler-type heat recovery were not included from References 3 and 4 as municipal incinerators.

Therefore, the above data should be used only as a general guide for whatever purpose. Specific data, if available, should be used for modeling considerations.

(4) establishing the optimum underfire/overfire air ratio. These operational procedures are quantified in Reference 10.

Although optimizing the combustion process through proper furnace design and careful operation yields some reduction of particulate emissions, add-on control devices are required for municipal incinerators to meet emission standards. Wet scrubbers and electrostatic precipitators have found wide use for this purpose. Fabric filters are still primarily experimental. Settling chambers, flooded or spray-wetted baffles, mechanical collectors, and afterburners have been used as final particulate control devices. However, because they have relatively low efficiency on small particles, these devices are now generally used only as gas precleaners. Exceptions are small municipal incinerators, where afterburners were the only control technology employed as of August 1979.[4]

Wet scrubbers applied to municipal incinerators have the following characteristics:

- Submerged entry of gases
- Spray-wetted-wall cyclones
- Venturi or orifice scrubbers

The first two configurations are moderate-to-low pressure drop scrubbers (generally less than 2.5 kPa) capable of only moderate collection efficiency. To meet current standards,[a] scrubbers with pressure drops exceeding 3.7 kPa and collection efficiencies above 95 percent are required.[11] The most successful, high efficiency scrubber design for municipal incinerator applications has been the venturi scrubber; however, flooded disk scrubbers can be used for the same applications. Pressure drops normally range from 3.7 to 12 kPa, and liquid use varies between 0.7 and 2 liters per actual cubic meter of exhaust gas.

---

[a]An example is the current New Source Performance Standard of 0.18 grams per dry standard cubic meter at 12 percent carbon dioxide (0.08 grains per dry standard cubic foot at 12 percent carbon dioxide) for large municipal incinerators. For typical solid wastes burned in the United States, this limit equates to 0.77 kg/Mg (1.5 lb/ton).

In addition to high energy requirements, the main disadvantages of high efficiency scrubbers, such as the venturi and flooded disk, are serious corrosion/erosion problems and the need for a liquid waste treatment system. Corrosion problems can be solved by using corrosion resistant materials and pH control. Liquid waste treatment requirements can be reduced by recirculation. However, solids-monitoring instrumentation, recycle tanks, and additional pumps are required.

9.3.1.2.1 Electrostatic precipitators. Electrostatic precipitators (ESPs) installed on municipal incinerators are usually the single-stage, duct type with horizontal gas flow. Normally, insulation is required on the shell to minimize corrosion due to acidic liquid condensation. Discharge electrodes are either of the weighted wire or supported frame variety. Collection electrodes are parallel stud plates spaced 20 to 30 cm apart. Rappers are the impact type--either mechanical, pneumatic, or electromagnetic. Water sprays may also be installed under the ESP's roof to rinse the collection electrodes.

Waste properties and the temperature of the gases entering the ESP are of utmost importance. These parameters affect particle resistivity and, hence, influence collection efficiency. Since moisture lowers the resistivity of the particles, it increases ESP efficiency. Moisture is often added to exhaust gases to promote this effect while at the same time lowering gas temperature. For typical installations, an optimum temperature range for precipitators is 200 to 315°C.[11]

Other factors that may affect the particulate matter collection efficiency of an ESP are gas velocity and the condition of the unit. Excessive velocities may re-entrain flyash and increase particulate emissions. Non-uniform flow may occur within the unit at lower flowrates, thereby creating increased particulate emissions due to channeling. Maintenance is extremely important to sustain optimum collection efficiency in such complex devices. Table 9.3-3 presents typical ESP design parameters for incinerator applications.[12]

Corrosion of electrostatic precipitators installed on municipal incinerators is a serious problem which must receive adequate consideration during design. Incinerator flue gas contains significant amounts of hydrochloric

Table 9.3-3. TYPICAL ELECTROSTATIC PRECIPITATOR DESIGN PARAMETERS FOR MUNICIPAL INCINERATOR APPLICATIONS[12]

Plate spacing, cm	20-30
Velocity through precipitator, m/s	0.9-1.8
Vertical height of plates, m	3.6-10
Horizontal length of plates[a]	0.5-1.5 x height
Applied voltage, volts	30,000-80,000
Gas temperature, °C	177-343
Gas residence time in precipitator, sec	3-6
Draft loss, kPa	0.03 to 0.2
Fields (electrical stages) in direction of gas flow	1-4
Total power for precipitator, KW per m^3/min (0.2-1 KW/1000 ACFM)	7-35 KW
Collection area, m^2 per 1000 m^3/min	400-1000
Efficiency, %	93-99
Gas flow per precipitator, m^3/min	850-8500
Migration velocity,[b] cm/s	6-12

[a]Aspect ratio = (total horizontal length [depth] of collection plates) (height of collection plates) = 0.5-1.5.
[b]Mean average effective migration velocity of a particle toward the collection electrode. Sometimes called precipitation rate or drift velocity.

acid and lesser amounts of SO_2; the SO_2 reacts with water to form sulfuric acid. These compounds, coupled with the high moisture content of the flue gas (5 to 20 percent), are responsible for creating the corrosive environment. There are three ways to minimize corrosion: (1) precipitator gas temperature is maintained above the acid dewpoint (generally above 175°C) by using adequate insulation, sealing off atmospheric air infiltration, and using auxiliary heaters; (2) precipitator shutdowns, in which cooling can occur, are minimized and the acid laden gas is purged immediately after shutdown; and (3) corrosion resistant materials are used.[13]

9.3.1.2.2 Fabric filters. The fabric filter, or baghouse, when properly designed and operated, is considered the most efficient particulate emission control device. The limited number of fabric filters installed on municipal incinerators all use silicone-treated fiberglass bags to withstand high temperatures; bags last from 1 to 3 years. Control efficiencies have been measured from 98 to greater than 99 percent. Pressure drops are between 0.75 and 1.75 kPa; air-to-cloth ratios (filter velocities) range between 0.6 and 1.2 meters per minute.[14]

Fabric filters are very sensitive to operating temperatures. The maximum satisfactory range for gas temperature is 120 to 290°C; the range can be much narrower for certain bag fabrics and exhaust gas compositions. Temperatures in excess of 260°C will: damage the silicone coating, accelerate bag deterioration, distort the metal frame, and potentially cause fires. Below 150°C, condensation and caking can lead to blinding of the filter and bag failure. The unit should also be sealed against infiltration of cool, ambient air.

All free moisture (entrained droplets or moist flyash) should be removed from the gas stream to prevent blinding of the filter. Since incinerator flue gases are usually cooled to an acceptable baghouse inlet temperature by water spray, adequate residence time must be provided following gas cooling to allow for complete evaporation of the water before the gases reach the baghouse.

Pertinent design and operating data for a successful commercial baghouse incinerator installation are presented in Table 9.3-4.[15]

Table 9.3-4. OPERATING AND DESIGN PARAMETERS FOR FABRIC FILTER BAGHOUSE ON MUNICIPAL INCINERATOR[15]

Unit capacity, Mg/day	N/A
Air flow, m^3/min	5090
Air temperature, °C	260
Fabric	Glass fiber
Air/cloth ratio, m^3/min per m^2	0.61
Bag size	
diameter, m	0.14
length, m	4.27
Number of bags, approximately	4350
Method of cleaning	Reverse air
Design pressure drop, kPa	0.5 to 0.75

9.3.2 Industrial and Commercial Incinerators

The various types of industrial and commercial incinerators are listed and quantified in Table 9.3-5.[16] Each type of incinerator is distributed fairly evenly throughout the United States, with the exception of apartment incinerators and conical (teepee) incinerators. The bulk of apartment incinerators are concentrated in EPA Region II, particularly in New York City, while teepee incinerators are primarily located in the Southern and Western U.S. Although presented in Table 9.3-5, incinerators used in apartments, stores, schools, and woodworking processes (teepee incinerators) are not specifically addressed in this section. They are declining in use and are projected to be essentially phased out by 1988.[16]

Particulate emissions from industrial and commercial incinerators are quite variable and depend principally on the type of waste processed. Total nationwide particulate emissions from industrial and commercial incinerators have been estimated at 158 Mg for 1977.[15]

9.3.2.1 Source Description and Emissions. The following paragraphs describe the types of incinerators generally considered as industrial and commercial incinerators and their emissions.

9.3.2.1.1 Single chamber incinerators. Single chamber incinerators are usually furnace boxes consisting of a combustion chamber and an ash pit. A grate separates the chamber from the pit. Waste is fed through a charging door which is located above the grate. An auxiliary fuel burner is normally located below the grate. An ash cleanout door provides access to the ash pit. Openings are incorporated in the charging door for overfire air and in the cleanout door for underfire air. Units are usually natural draft, although mechanical-draft excess-air units do exist. Natural-draft units are normally controlled by a barometric damper.

The advantages of the single chamber incinerator are simplicity and low cost. The disadvantages, due principally to design, include inadequate mixing of combustion gases, short retention time, extreme temperature fluctuations, and entrainment of particulate matter in the flue gas. Incomplete combustion, due to various combinations of the above disadvantages results in excessive emissions of particulate and gaseous hydrocarbons. The emissions often create

Table 9.3-5. INDUSTRIAL AND COMMERCIAL INCINERATOR TYPES[16]

Incinerator types	Number of operating incinerators in 1978	Current average size of incinerator, Mg/y	Projected number of operating incinerators in 1983	Projected average size of incinerator in 1983, Mg/y
Commercial and institutional				
o Hospital, nursing home	3,498	135	3,291	163
o Store, school, etc.	8,161	135	3,084	163
Apartment	6,388	140	4,114	140
Pathological	1,990	79	2,260	79
Industrial	4,136	450	4,098	495
Conical (teepee)	551	7,864	231	7,864

dark smoke, foul odors, and carbon monoxide. Particle size distributions for single chamber incinerators vary considerably according to the design and condition of the unit and the type of waste charged.

9.3.2.1.2. Multiple chamber incinerators. Multiple chamber incinerators are built with two or more interconnected refractory-lined chambers designed to provide optimum combustion of the charged solid waste. A representative multiple chamber incinerator has a primary or ignition chamber which is divided into a combustion section and an ashpit by a grate on which the solid waste is oxidized. An auxiliary fuel burner is normally located beneath the grate. The primary chamber has both overfire and underfire air controls.

A mixing or downpass chamber follows the primary chamber. The mixing and primary chambers are separated by a bridge wall which has an opening, the flame port, at its top. This port allows combustion gas to flow from the primary chamber into the mixing chamber. Secondary air ports in the mixing chamber supply air for completion of combustion. The secondary burner is located in this chamber.

The last chamber is the secondary combustion chamber. It is separated from the mixing chamber by a curtain wall. This wall has an opening at the bottom which allows mixing chamber combustion gases to enter the secondary combustion chamber for final combustion. Some particulate removal occurs in this last chamber due to wall impingement and simple settling.

Multiple chamber incinerators are usually natural draft. However, mechanical-draft excess-air and starved-air units also exist. Multiple chamber incinerators can be field-erected or of the modular variety depending on the size desired. Units can also be of the in-line or retort configurations. Each configuration offers certain advantages which are fully described in the literature. Particle size distributions for multiple chamber incinerators depend on the unit's design and condition, and the type of waste charged.

9.3.2.1.3 Controlled-air incinerators. Controlled-air incinerators consist of two distinct refractory lined chambers. A reducing atmosphere is maintained in the primary chamber, and an oxidizing atmosphere is maintained

in the secondary chamber. Starved-air incinerators could be considered a subset of controlled-air incinerators because no overfire air is supplied in the primary chamber.

Waste is charged into the primary chamber where, under a reducing atmosphere, only a portion of the waste is oxidized. Usually, it is the fixed carbon (the char) which burns and releases heat. The heat pyrolyzes the volatile portion of the waste, releasing a dense combustible smoke which then passes into the secondary chamber.

Therefore, the primary chamber can have the following four zones:

- Ash bed
- Char bed
- Pyrolysis
- Overfire

These zones are present for all waste materials regardless of chemical composition, physical state, and water and ash content. However, the size of the zones may vary depending on the waste. The ash bed at the bottom of the chamber is the inert region where the inorganic, incombustible part of the waste collects. The char bed is where the char portion of the waste is oxidized. The pyrolysis zone contains waste in various stages of gasification. The overfire zone is the region through which the gases pass to the secondary chamber.

Upon entering the secondary chamber the gases are mixed with additional air; the mixture is then ignited, and the smoke is oxidized. Auxiliary fuel is a requirement only if the mixture does not support combustion. Temperatures are maintained between 760 and 1370°C to ensure complete combustion, minimize nitrogen oxide production, and protect equipment. Proper air control by controlled air dampers and temperature control by auxiliary fuel control valves ensure that the desired secondary chamber temperature is maintained.

Controlled-air incinerators were developed because single and multiple chamber incinerators could not satisfy federal, state, or local particulate emission requirements without add-on pollution control equipment such as scrubbers. As with single and multiple chamber incinerators, particulate matter distribution varies according to unit design condition and the type of waste charged.

The next few pages describe special purpose industrial and commercial incinerators that are used to a significantly lesser degree than those incinerators previously discussed.

9.3.2.1.4 Rotary kiln incinerator. The rotary kiln incinerator is a horizontal, refractory-lined slightly inclined hollow cylinder that slowly rotates axially. Waste fed at the higher end traverses the length of the kiln due to the revolving motion and the incline. Liquid and gaseous wastes are charged through auxiliary burners at the kiln's lower end. The waste is incinerated by this countercurrent charging, and the noncombustibles drop out at the lower end. The rotating action continually exposes new surfaces for oxidation and removes ash. Often the discharge end is hooded to allow combustion gases to pass to a secondary combustion chamber.

All combustion requirements (retention time, air supply, temperature, and turbulence) can be controlled. Waste retention time is controlled by varying the kiln's rotational speed. Gas stream retention time is mandated by variable air supply controls. Narrow temperature ranges can be maintained by varying the waste feed rate and the auxiliary burner controls. Combustion gas is mixed by the turbulence caused by the kiln's rotating action as that gas stream passes from the kiln to the secondary combustion chamber. A mixing chamber is often located directly between the kiln and the secondary chamber to ensure complete combustion.

The kiln's inside diameter must be sufficiently large to keep the velocity of the gas stream low enough to prevent entrainment of particulate matter. Rotary kiln incinerators are well suited for all combustible waste including hazardous organic wastes and sewage sludges.

9.3.2.1.5 Rotary hearth incinerators. The rotary hearth incinerator is a circular, refactory-lined combustion chamber with a rotating hearth. Solid waste is charged on the outer perimeter of the slowly rotating hearth. The added material forces the partly burned waste to move in a special path toward an ash pit in the center of the hearth. Waste charge retention time is controlled by the rotational speed of the hearth. At a point in the rotation, the noncombustible ash is scraped off the hearth into the ash discharge pit by a plow mechanism. Liquid and semi-liquid waste are usually

Auxiliary burners supplement combustion chamber heating needs. Hearth rotation permits continuous waste feeding and maintains a uniform bed on the hearth. An optimal constant temperature can be maintained by adjusting the feed and rotational rates.

Unit design normally provides a cyclonic path for the combustion gases to pass through the combustion chamber to the outlet. Complete mixing of the combustion gases is accomplished by this cyclonic action.

9.3.2.1.6 Multiple hearth incinerators. The multiple hearth incinerator is very similar to the rotary hearth except that it usually consists of 4 to 13 hearths in a vertical stack. Waste is fed to the outer perimeter of the top hearth and is slowly raked by rabble arms toward the hearth's center where it falls onto a second hearth. The waste is then raked to the outer perimeter of the second hearth and falls to a third hearth and so on. Finally, the noncombustible ash falls out of the incinerator's bottom into an ash removal system.

Three phases of incineration occur at different levels. Evaporation of moisture and oxidation of volatiles occur on the upper hearths. The devolatilized waste is then burned on the middle hearths. Finally, the bottom hearths cool the ash prior to discharge. Rabble arm teeth continually agitate the waste to expose new surfaces to evaporate moisture and oxidize volatiles. Adequate combustion gas mixing is ensured by the stirring of the rabble arms and by the directional changes as the gas travels around the hearths which serve as baffles.

Multiple hearth incinerators are well suited for most organic wastes. Solids are usually fed on the top hearth, semi-liquids through side ports, and liquids and gases through auxiliary burners.

9.3.2.1.7 Liquid injection incinerators. Liquid injection incinerators are vertical or horizontal refractory-lined combustion chambers in which atomized liquid wastes are burned. Liquid injection is limited to pumpable liquids and slurries.

Combustion is enhanced by atomizing the liquid to droplets of less than 40 micrometers in diameter. It may be necessary to heat or mix viscous liquids or slurries in order to pump them through atomizing nozzles.

A forced draft to the combustion chamber mixes the combustion gases and creates turbulence. Frequently, this result is also produced by firing the atomized waste tangentially to create a cyclonic effect in the chamber.

The required combustion oxygen is supplied by the compressed air used for waste atomization. Heated, pressurized air can also be injected near the discharge of the combustion chamber to create an afterburner effect. Additional required heat is provided by auxiliary burners.

Usually, particulate emissions from liquid injection incinerators are of little consequence since there is little inorganic material in the waste that would create such emissions.

9.3.2.1.8 Fluidized bed incinerators. The fluidized bed incinerator is a refractory-lined, hollow metal cylinder with a grid in its lower section which supports a bed of inert, granular particles such as sand. Blower-driven air enters the bottom of the unit and agitates and expands (fluidizes) the bed, causing it to behave like a boiling liquid. Wastes are then fed pneumatically, mechanically, or by gravity into the bed where rapid, relatively uniform mixing occurs.

During combustion, heat is transferred from the bed media to the injected waste materials. Bed temperatures are typically between 760°C and 870°C. Because fluidized-bed incinerators have up to three times the heat capacity of conventional incinerators in the same temperature ranges, they are often self-sustaining and need no auxiliary fuel after start-up. Waste combustion heat is transferred back to the bed. Solid materials stay in the bed until they have become light enough to be carried off by the flue gas as particulates. Auxiliary burners heat the bed to the required temperature during start-up and then supply heat when necessary.

Fluidizing air flow must be properly balanced to fluidize the bed and provide the required oxygen for combustion. Too much air would blow bed media and incomplete combustion products out of the bed with the flue gas. Too much air also depletes the stored heat energy of the bed.

Advantages of the fluidized bed incinerator are that it: (1) has a minimum of mechanical components; (2) is relatively simple to operate; and (3) will incinerate all organic wastes, particularly liquids. It is also very attractive for intermittent operations since the bed serves as a large heat reservoir, minimizing the amount of fuel necessary for start-up following shutdown.

Stack parameter data for single, multiple, and controlled-air chamber industrial and commercial incinerators are presented in Table 9.3-6.

9.3.2.2 Emission Control Techniques. Particulate emissions are the only air pollutants emitted from incinerators for which control devices are generally considered appropriate. The nature and quantity of particulate emissions from industrial and commercial incinerators vary depending on: (1) the waste type (e.g., solids or liquids), quantities, and characteristics; and (2) the design and operation of the incinerator. Tables 9.3-1 and 9.3-7 provide ranges of uncontrolled and controlled emissions from a number of industrial incinerators. Table 9.3-8 provides ranges of uncontrolled emissions from electric motor incinerators.

The three mechanisms principally responsible for these particulate emissions are:

- Combustion gas entrainment of particles from the burning waste.
- Incomplete combustion, above the burning waste, of the carbon formed by the cracking of volatiles produced during pyrolysis.
- Condensation of inorganic salts or oxides as the flue gas cools.

Commonly used particulate emission control devices for incinerators include settling chambers, afterburners, mechanical separators (e.g., cyclones), scrubbers (e.g., wetted baffles, spray chambers, venturi scrubbers), and, to a lesser degree, electrostatic precipitators and fabric filters.[1]

Collection or removal of small diameter particles (less than 5.0 micrometers) is difficult and requires sophisticated and efficient pollution control equipment. For that reason, several of the above devices by themselves would be unable to satisfy State regulations on allowable particulate emissions. Fundamental understanding of particle dynamics and the physical concepts of the various types of devices is necessary to evaluate these devices for collection or removal of particulate emissions from specific incinerators. Device selection, once it has been determined that applicable regulations can be satisfied, is a compromise of: (1) particulate matter collection efficiency, (2) annual operating cost, and (3) initial capital investment.

Pollution control devices and their applicability to reducing incinerator particulate emissions are briefly discussed below.

Table 9.3-6. INDUSTRIAL AND COMMERCIAL INCINERATOR STACK PARAMETER DATA[8]

Emission sources	Multiple chamber		Single chamber		Controlled-air chamber	
	Industrial	Commercial	Industrial	Commercial	Industrial	Commercial
Number of sources	470	1,280	447	541	136	44
Average stack height, m	13.1	12.8	22.3	16.1	19.2	10.4
Average stack diameter, m	0.79	0.61	1.2	0.67	1.1	0.64
Average temperature, °C	474.0	450.0	471.0	345.0	519.0	588.0
Average gas flowrate, Am^3/s	5.39	2.21	27.8	12.2	8.26	1.61
Average annual quantity burned, Gg/Incinerator	1.53	1.75	5.42	0.237	2.23	0.707

Table 9.3-7. SUMMARY OF EMISSION TEST DATA FROM INCINERATORS BURNING WIRE INSULATION, SI UNITS (ENGLISH UNITS)[1]

Pollutant	No. of sources tested	Uncontrolled emissions, kg/Mg (lb/ton) feed [mean]	Uncontrolled emissions, kg/Mg (lb/ton) combustible [mean]	Emission factor[2] kg/Mg (lb/ton)	Controlled emissions, kg/Mg (lb/ton) feed [mean]	Controlled emissions, kg/Mg (lb/ton) combustible [mean]
Wire insulation	11	7.7 - 12.4 [10.5]	36.1 - 122.5 [58.8]	3.5 - 7.5	0.63 - 7.45 [3.43]	12.9 - 28.5 [21.7]
		(15.5 - 24.9) [21.0]	(72.2 - 245.0) [117.6]	(7.0 -15.0)	(1.26 - 14.9) [6.86]	(25.8 - 57.1) [43.4]

Table 9.3-8. SUMMARY OF UNCONTROLLED EMISSION TEST DATA FROM ELECTRIC MOTOR INCINERATORS, SI UNITS (ENGLISH UNITS)[1]

Pollutant	No of sources tested	Emissions,[a] kg/Mg (lb/ton) [mean]	Emission factor,[2] kg/Mg (lb/ton)
Particulates	11	1.5 - 5.22 [2.62] (3.0 - 10.44) [5.24]	3.5 - 7.5 (7.0 - 15.0)

[a]Based on combustible feed.

9.3.2.2.1 Settling chambers. Settling chambers are the simplest, least expensive and least effective particulate emission control devices for incinerators. The principle employed is to provide enough volume in the chamber to decrease the combustion gas velocity to 3 meters per second or less. This velocity reduction allows particles greater than 100 micrometers to settle out by gravity. Baffles are used in some settling chambers to promote inertial settling, while other chambers wet down the particulate material which has settled to prevent reentrainment in the gas stream. Depending on the design, operation, and maintenance, such chambers can achieve, at most, 30 to 35 percent by weight particulate matter removal. This settling chamber method of particulate emission control is no longer used by itself, but is used in conjunction with other more efficient particulate emission control devices.

9.3.2.2.2 Afterburners. An afterburner can be either an add-on particulate emission control device or an integral component included in the original incinerator design. The latter is often referred to as the secondary burner in the secondary combustion chamber. The purpose of the afterburner is to oxidize organic particulate emissions, gases, and odors. There are two types of afterburners: direct flame and catalytic. Afterburners have been used extensively on incinerators and provide excellent organic particulate emission control. For inorganic particulate matter removal, however, other control devices must be used.

9.3.2.2.3 Mechanical separators. Mechanical separators include the most commonly used particulate emission control device, the cyclone separator. In this device, centrifugal force is used to separate particles from the exhaust gas. Large diameter cyclones have low collection efficiencies (down to 30 percent), especially for particles of less than 30 micrometers. They are, however, low in capital cost and operate at a low pressure drop of 0.25 to 0.75 kPa. Multiple-tube cyclones can achieve efficiencies of over 90 percent on particles greater than 10 micrometers. Pressure drops of between 0.75 and 1.25 kPa are common with multiclones. Multiclones also have problems with plugging and erosion. All cyclones, regardless of tube diameter, must contend with acid corrosion and gas leakage.

9.3.2.2.4 Wet scrubbers. Wet scrubbers commonly used for particulate matter removal in incinerator flue gases include the following types:

- Wetted baffles
- Spray chambers
- Venturi scrubbers

In each type, particulate matter collection is a combination of inertial interception, impingement, diffusion, thermal gradients, and electrostatic attraction. Collection is also affected by particle wetting properties, moisture condensation, and drop evaporation. Interception and impingement are the two most important mechanisms.

Wetted Baffles--Wetted baffles are the simplest kind of wet scrubber and consist of metal or brick screens or plates wetted by flushing sprays or overflow weirs. Although wetted baffles are often installed in the effluent gas duct, they can also be housed in a separate chamber. Water usage varies between 1.7 and 6.9 liters per minute per megagram of waste burned per day. A pressure drop between 0.075 and 0.15 kPa is common. Efficiencies are quite low since only particles greater than 50 micrometers are removed.[16]

Spray Chambers--A spray chamber is a round or rectangular chamber into which nozzles spray water. Three different water spray configurations are possible: cocurrent, countercurrent, and crosscurrent. Water usage varies between 670 and 2,000 liters per actual cubic meter of flue gas per minute. Pressure drops are normally between 1.25 and 1.75 kPa. Efficiencies of 90 percent or greater are possible, with efficiencies declining rapidly for particles of 5 micrometers or less.

Venturi Scrubbers--Venturi scrubbers promote particulate matter removal by impacting a high velocity gas stream with a finely atomized water spray. A number of physical phenomena are involved during this impaction. High pressure drops of greater than 3.7 kPa make this an energy expensive particulate emission control option. However, efficiencies of up to 99 percent or more are possible for particles as small as 2 micrometers.

9.3.2.2.5 Electrostatic precipitators. Particulate matter collection in an electrostatic precipitator (ESP) is based on particle charging and collection on oppositely charged electrodes. The pressure drop through a typical ESP is less than 0.125 kPa. Energy requirements are between 7,000

and 14,000 J/sec/m^3 of exhaust gas per minute. In the United States and Europe, efficiencies of between 90 and 99.6 percent have been achieved on incinerator exhaust gases.

9.3.2.2.6 Fabric filters. Fabric filters collect particulates by impinging them on a filter surface. Present fabric filter systems cannot continually withstand gas temperatures above 260°C; however, metal, carbon, and ceramic fibers offer promise for operation at higher temperatures. Also, fabric filters are fire prone if the combustible content of the collected material is sufficient to support combustion.

Typical pressure drops through fabric filters range from 1 to 1.5 kPa. Filtering velocity (air-to-cloth ratio) ranges from 3 to 6.1 $m^3/min/m^2$ of cloth for units that are cleaned by reverse jet and 0.46 to 0.9 $m^3/min/m^2$ of cloth for units cleaned by shaking.[16]

Minimal research, outside of the scope of the previously discussed particulate emission control devices, is being conducted in new particulate emission control technologies. Some technology is being borrowed from other emission control areas that use combustion to recover heat (e.g., nonfossil fuel-fired boilers); examples of these other areas include dry scrubbers and gravel-bed filters. However, this emission control technology is in the experimental stage and is poorly documented.

9.3.3 Sludge Incinerators

Sludge incinerators have been developed because solid waste and liquid waste incinerators cannot adequately handle sludges or slurries. Solid waste incinerators can only destroy very small proportions of sludges because of the sludges' low heat content and high water content. Liquid waste incinerators cannot handle sludges because of solids handling problems. The incinerator design options available are limited; these options are discussed below.

The four broad classes of sludges processed in sludge incinerators are as follows:

- Flocculent sludges from primary sedimentation of effluents.
- Biological sludges from secondary sedimentation of biological treatment processes.
- Chemical sludges from neutralization and precipitation processes.
- Oil and hydrocarbon sludges from the mineral and petrochemical industries.

Most of the ash produced during sludge incineration is discharged with the stack gas.[17]

9.3.3.1 Source Description and Emissions. Multiple hearth and fluidized bed incinerators are the most common incinerators used for sludge incineration.

The multiple hearth incinerator is used to dispose of most forms of combustible wastes. It can incinerate combustible sludges, tars, granulated solids, liquids and gases; and it is especially well suited to the disposal of spent biological treatment facility sludges. For this reason, a disposal facility, especially one which contains biological treatment capability, could contain a multiple hearth unit. About 120 such multiple hearth units have been incorporated as part of biological treatment disposal facilities. The units are designed with diameters varying from 1.83 to 6.70 meters; they are capable of handling from 5 to 1,130 Mg of waste per 24 hours, with the number of hearths usually ranging between 4 and 12.

The fluidized bed incinerator disposes of combustible solid, liquid, and gaseous wastes. For this reason, fluidized bed incinerators are especially suitable for the disposal of sludges. Standard combustion units rely on heat transfer from hot gases that contain only 600 J/m^3. However, the expanded bed of the fluidized bed incinerator has 60,000 J/m^3, and therefore, more heat to drive off the liquid phase.

Other less frequently used incineration or thermal techniques include flash drying with incineration, wet air oxidation, atomized suspension, and cyclonic and infrared incineration.

Stack parameters for sludge incinerators are presented in Table 9.3-9.

9.3.3.2 Emission Control Techniques. New Source Performance Standards (NSPS) regulating discharges from municipal sludge incinerators have been promulgated by the Environmental Protection Agency (EPA). These standards limit discharge of particulate matter to 0.65 grams per kilogram of dry sludge input from both new and modified sewage sludge incinerators. Particulate matter collection efficiencies of 98.5 to 99.5 percent are required to meet the NSPS.[18] Particulate emissions from older, non-modified incinerators not subject to NSPS are regulated by State and local agencies through incinerator codes or process weight restrictions. Table 9.3-1 provides ranges of uncontrolled and controlled emissions from sewage sludge incinerators.

Table 9.3-9. GOVERNMENTAL, COMMERCIAL, AND INDUSTRIAL SLUDGE INCINERATOR STACK PARAMETER DATA[8]

Emission sources	Governmental	Commercial	Industrial
Number of sources	75	18	69
Average stack height, m	23.8	28.4	12.5
Average stack diameter, m	1.5	2.2	0.67
Average temperature, °C	146.0	419.0	685.0
Average gas flowrate, Am^3/s	15.9	31.0	6.58
Average annual quantity burned, Gg/Incinerator	13.1	283.0	2.52

The wet scrubber is the most common particulate emission control device used in sludge incineration. Venturi scrubbers and impingement scrubbers used in conjunction with an oxygen meter that automatically regulates fuel burning rate are capable of meeting the NSPS.[19] Electrostatic precipitators could also provide more than adequate control and are doing so in Japan, where their performance has formed the basis for setting emission standards.[16]

REFERENCES FOR SECTION 9.3

1. Source Category Survey: Industrial Incinerators. U.S. Environmental Protection Agency. Publication No. EPA 450/3-80-013. May 1980.

2. Compilation of Air Pollution Factors, Second Edition. U.S. Environmental Protection Agency. Publication No. EPA-AP-42, August 1977.

3. Personal Communication from Van Noordwyk, H., Acurex Corporation, Mt. View, CA, to Alvarez, R. J., Hofstra University, Hempstead, NY. October 1979.

4. Blackwell, C. D. Survey of Small Municipal Incinerators. Acurex Corporation. Research Triangle Park, NC. August 1979.

5. OAQPS Data File of Nationwide Emissions. U.S. Environmental Protection Agency, Office of Air Quality Planning and Standards. Research Triangle Park, NC. February 1979.

6. Niessen, W. R. et al. Systems Study of Air Pollution From Municipal Incineration, Volume I. Arthur D. Little, Incorporated. Cambridge, MA. U.S. Department of Health, Education, and Welfare, National Air Pollution Control Administration. Contract No. CPA-22-69-23. March 1970.

7. Walker, A. B., and F. W. Schmitz. Characteristics of Furnace Emissions from Large, Mechanically-Stoked Municipal Incinerators. (Presented at the 1966 National Incinerator Conference. American Society of Mechanical Engineers. New York, NY. May 1-4, 1966.)

8. Atmospheric Modeling Data from National Emission Data System (NEDS). U.S. Environmental Protection Agency, Office of Air Quality Planning and Standards. Research Triangle Park, NC. May 1979.

9. DeMarco, J., et al. Municipal-Scale Incinerator Design and Operation. U.S. Department of Health, Education, and Welfare, Bureau of Solid Waste Management, Public Health Service. Publication No. 2012. 1969.

10. Field Operations and Enforcement Manual for Air Pollution Control, Volume II. U.S. Environmental Protection Agency, Office of Air Programs. Publication No. APTD-1101. August 1972.

11. Municipal Incinerator Enforcement Manual. U.S. Environmental Protection Agency, Office of General Enforcement. Washington, DC. Publication No. EPA 340/1-76-013. January 1977.

12. Weinstein, N. J. and R. F. Toro. Thermal Processing of Municipal Solid Waste for Resource and Energy Recovery. Ann Arbor Science Publishers Inc. Ann Arbor, MI. 1976.

13. Franconeri, P. Electrostatic Precipitator, Corrosion on Incinerator Applications. (Presented at the 68th Annual Meeting of the Air Pollution Control Association. June 1975.)

14. *Inspection Manual* for Enforcement of New Source Performance Standards, Municipal Incinerators. U.S. Environmental Protection Agency, Office of General Enforcement. Washington, DC. Publication No. EPA 340/1-75-003. February 1975.

15. Bergmann, L. New Fabrics and Their Potential Application. Journal of Air Pollution Control Association. 24:12, 1187-1192. December 1974.

16. McInnes, R. G., et al. Screening Study to Determine the Need for Standards of Performance for Industrial and Commercial Incinerators. GCA Corporation. Bedford, MA. January 1979.

17. The McIlvaine Scrubber Manual. McIlvaine Company. Northbrook, IL. 1974.

18. Helfand, R. M. A Review of Standards of Performance for New Stationary Sources - Sewage Sludge Incinerators. The MITRE Corporation. McLean, VA. U.S. Environmental Protection Agency. Contract No. 68-02-2526. April 1979.

19. Background Information for New Source Performance Standards, Volume III. U.S. Environmental Protection Agency. Publication No. 450/2-74-003. APTD-1352C. February 1974.

Page Intentionally Blank

9.4 OPEN BURNING

In the U.S., solid waste treatment by open burning includes: (1) agricultural crop residue burning, (2) prescribed burning of naturally occurring forest materials and forest slash, and (3) municipal solid waste burning. The burning of the first two categories of waste contributes about 503 Gg of particulate matter to the atmosphere annually, while emissions from municipal solid waste burning in open dumps is much less significant.[1,2] Although emissions from municipal solid waste burning can be a significant factor in localized air quality problems, the quantity of emissions are minimal on a national basis when compared to those from agricultural and prescribed burning. In addition, municipal solid waste disposal via open burning is being conducted less each year. For these reasons, only emissions and control technologies characteristic of agricultural and prescribed burning are discussed here.

9.4.1 Agricultural Burning

Agricultural open burning is used for the disposal of residues from field crops, row crops, and fruit trees. These residues include: rice straw and stubble, barley straw and stubble, wheat residues, orchard prunings and natural attrition losses, grass straw and stubble, potato and peanut vines, tobacco stalks, soybean residues, hay residues, sugarcane leaves, and farmland grass and weeds. Several important advantages are realized from agricultural open burning:

- Low cost residue removal and disposal
- Preparation of farmlands for cultivation
- Clearing of vines or leaves to facilitate harvesting
- Disease control
- Direct weed control by incineration of weed seeds and plants
- Indirect weed control by providing clean soil surface for soil-active herbicides
- Destruction of certain mites, insects, and rodents

It has been estimated that 13.2 Tg of vegetation were burned in the U.S. in 1973, resulting in the emission of 113 Gg of particulate matter.[3] A summary of the quantities of agricultural residues burned and particulate emissions produced in each state is presented in Table 9.4-1. Most burning occurs

Table 9.4-1. SUMMARY OF 1973 STATE AND NATIONWIDE AGRICULTURAL OPEN BURNING DATA[3]

State	Area burned, 10^7 m^2/yr	Amount burned, Gg/yr	Particulate emissions, Mg/yr
Alabama	36	161	1,400
Arizona	4.5	20	170
Arkansas	26	115	980
California	309	2,075	26,000
Colorado	32	143	1,200
Delaware	0.1	2	17
Florida	109	1,716	15,000
Georgia	39.5	883	7,500
Hawaii	44.7	1,175	10,000
Idaho	4.8	22	190
Kansas	243	544	4,600
Kentucky	13	58	490
Louisiana	142	1,904	16,000
Maine	15	33	280
Maryland	0.6	7	60
Massachusetts	0.6	3	26
Michigan	21	93	790
Minnesota	61.2	274	2,300
Mississippi	138	617	5,200
Missouri	40.5	181	1,500
Montana	34	152	1,300
Nebraska	67.6	303	2,600
Nevada	0.8	5	43
New Mexico	0.5	2	17
North Carolina	138	619	5,300
North Dakota	97	438	3,700
Ohio	32	142	1,200
Oklahoma	36	161	1,400
Oregon	107	479	4,100
Pennsylvania	15	69	590
South Carolina	8	38	320
South Dakota	59	265	2,300
Tennessee	14	61	520
Virginia	9.5	43	370
Washington	57	256	2,200
Wisconsin	32	145	1,200
Wyoming	7.3	34	290
National Total	2,350	13,242	113,000

in the Western and Southern States, and Hawaii. The quantity of agricultural wastes disposed of by open burning has been declining over the past 10 years, primarily due to: (1) increasing awareness of its contribution to air pollution; (2) the development of waste utilization; (3) chemical weed, pest, and disease controls; and (4) modern tillage and fertilization practices. In some cases, however, no economical alternatives to open burning exist at this time.

Particulate emissions from burning are formed as a consequence of poor mixing between the fuel and air and the quenching of the combustion gases by the surrounding cool air. Particles consist of carbon, flyash, and condensed organic materials emitted during the pyrolysis stage of the burning process. The majority of these particles are in the submicrometer size range and thus can have adverse health and environmental effects.[4] Emission factors for agricultural open burning are presented in References 3, 5, and 6.

9.4.1.1 Methods of Burning. The major burning method utilized in agricultural residue disposal is burning by headfire or backfire. A headfire progresses in the same direction as the wind and the fire front is typically fast-moving. Headfire burning can be used under varying fuel loading conditions. With backfire burning, the fire front progresses in the opposite direction from the wind and is typically slow-moving. Consequently, backfire burning provides a greater residence time, thereby allowing for more thorough combustion. Backfire burning produces significantly less particulate emissions than headfire burning; however, backfire burning cannot be used when the fuel loading is low because the fire front cannot be sustained.

9.4.1.2 Control Techniques. Control techniques can be used either to reduce the quantity of particulate matter emitted or minimize the adverse impact of open burning. These techniques include proper fire and fuel management, appropriate burning operations under optimum meteorological conditions, and alternative residue disposal procedures.

9.4.1.2.1 Fire and fuel management. Backfire burning results in fewer particulate emissions than headfire burning. For the burning of rice residues, this reduction has been shown to be approximately 50 percent. However, backfire burning is more costly to implement than headfire burning.

The reduction of particulate emissions is also dependent on combustion residence time, air temperature, humidity, wind speed, fuel loading, and fuel

residual moisture content. Of these variables, fuel residual moisture content has the greatest influence on particulate emissions. Residue with a 10 percent moisture content has been shown to emit approximately one-third as much particulate matter upon burning as residue with a 25 percent moisture content.[7] The residue moisture content is strongly related to solar radiation, relative humidity, air temperature, wind speed, and residue loading. In order to minimize moisture content, the day and time of burning should be chosen carefully. Residue drying time can be reduced by spreading the residues evenly over the field, which also improves disease control.

9.4.1.2.2 Meteorological considerations. Although not a particulate reduction technique, meteorological dispersion can be used to reduce the effect of pollutants generated from agricultural open burning. Burning should be permitted only when meteorological conditions are conducive to good dispersion. Maximum dispersion occurs when the inversion base, maximum mixing height, wind velocity, and wind direction are at specified levels. The values of these various parameters are site-specific and depend on the season, time of day, and topography of the area.

9.4.1.2.3 Alternatives to agricultural burning. Alternatives to agricultural open burning fall into the general categories of: mechanical or chemical residue and crop treatment, and controlled incineration.

The most common method of mechanical treatment involves incorporation of the waste material directly into the soil. This is accomplished by clipping or shredding the waste material for subsequent cultivation. Several factors must be considered before implementing mechanical soil incorporation techniques in areas where residues are now burned. These factors include whether or not there is: (1) a poor soil conditions situation for cultivation where the water table is high or where residue occurs late in the year when temperatures are low and biodegradation is slowed, (2) the occurrence of bulky waste material not capable of incorporation, such as large prunings, (3) a requirement for rapid removal of the residue to permit planting of the following crop, and (4) possible soil nitrogen depletion due to residue decomposition. Another method of mechanical residue treatment is the physical removal of the residue to an offsite location. This method is generally expensive unless the residue can be sold at a price sufficient to cover the cost of collection and transport.

Chemical methods may be used to control weeds, disease, and pests in the event that open field burning is not used. The subsequent effect of the addition of fungicides, herbicides, and pesticides to the air and water must be evaluated.

Another alternative method of agricultural open burning is the controlled incineration of agricultural residue with a mobile field sanitizer. Development of such a device was started at Oregon State University in 1970. Particulate emissions from this incinerator were reduced by 80 to 90 percent compared to emissions from open burning. However, the reliability of the sanitizer and its effectiveness in the control of weeds, pests, and disease, and in the thermal stimulation of soil for various crop species is still not fully known.

9.4.2 Prescribed Burning

Prescribed burning is conducted in the United States to: (1) reduce the hazard of wildfires posed by excessive fuel accumulations, (2) aid in silvicultural activities, and (3) improve grazing forage and wildlife habitat. Prescribed burning is the controlled burning of naturally occuring forest materials and forest slash under prescribed conditions to keep fire intensity and rate of spread within prescribed limits. This resource management practice is carried out in the forested regions of the Southeast, Pacific Northwest, and Rocky Mountain States. Particulate emissions from prescribed burning and wildfires (fires set by natural or unplanned human activities) are quantified by region in Figure 9.4-1.[8] National estimates of the annual production of particulate emissions from wildfires are 32 Tg; emissions from prescribed fires are 390 Gg.[2]

9.4.2.1 Methods of Burning. Prescribed burning techniques may be divided into broadcast burning, pile burning, and understory burning. Broadcast burning is an "in place" method of slash disposal and brushland conversion (burning off the brush and later planting grass or trees). The size of the area burned, ignition devices, and burning pattern used depend on the specific environmental conditions and treatment objectives for each site. The basic ignition patterns utilized to initiate broadcast burning are strip, ring, center, and area.

Strip ignition is used to initiate headfires, backfires, strip headfires, and flank fires. Headfires and backfires are described in Section 9.4.1.

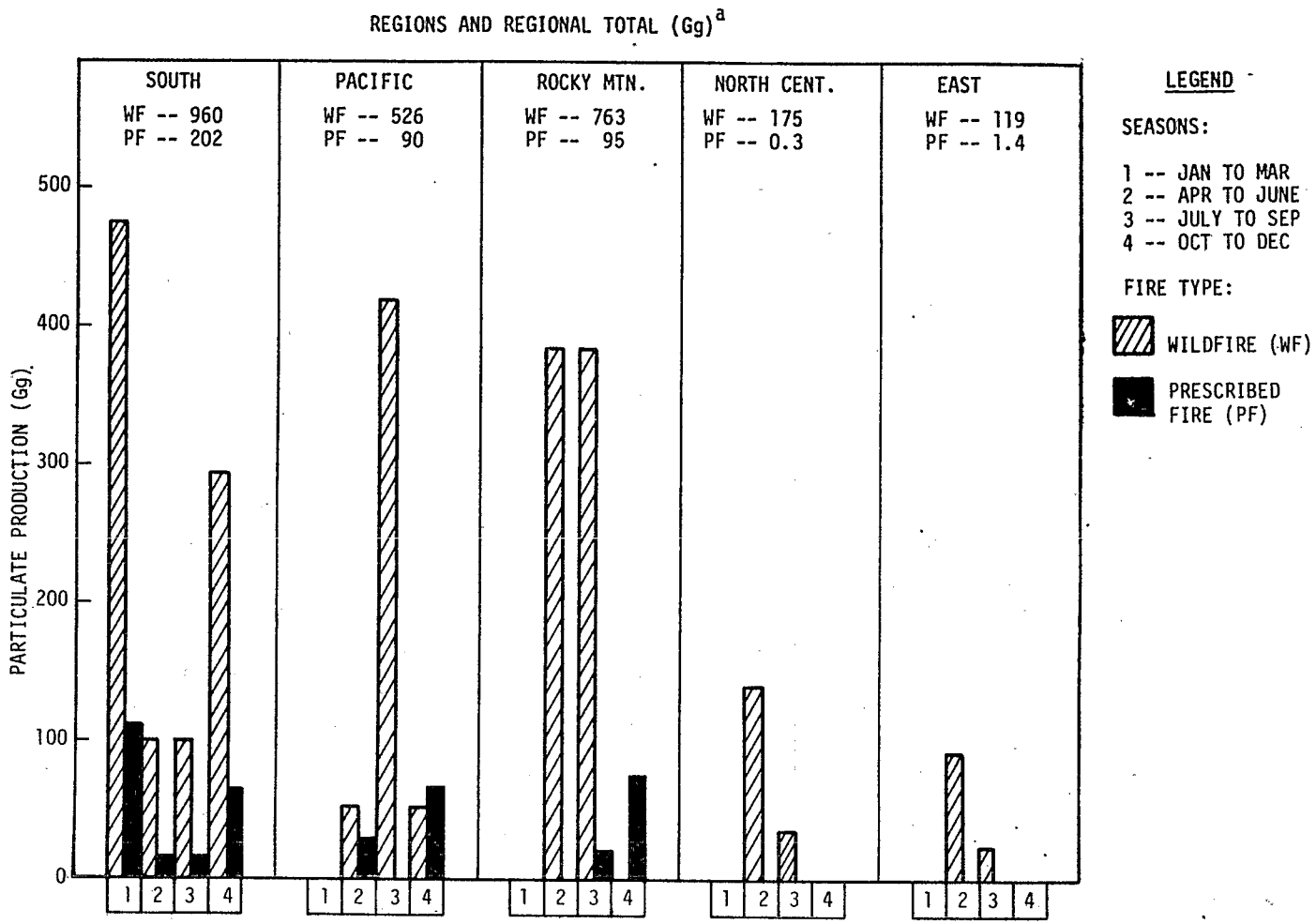

[a]PARTICULATE EMISSIONS FROM WILD AND PRESCRIBED FIRES IN ALASKA ARE 587 AND 0 Gg, RESPECTIVELY.

Figure 9.4-1 Annual forest fire particulate production by region & season.[8]

Strip headfires are parallel headfires across the intended burn area from the downwind side toward the windward side. Flank fires are set in strips parallel to the wind and allowed to spread at an angle to the wind. Ring ignition is accomplished by firing the perimeter of the intended broadcast burn area and allowing the fire to burn towards the center. This type of ignition is generally used in moderately flat terrain and accomplished with light fuels. Center ignition is accomplished by igniting the center of the burn area and allowing the fire to burn towards the perimeter. Area ignition is accomplished by checkerboard firing or spot ignition of the burn block (area to be burned).

Pile burning is utilized when insufficient fuel is available to support a broadcast burn or during wet or snowy periods. Unmerchantable material is moved by hand or mechanical means (yarded) to partially cut, thinned or clear-cut areas and concentrated into piles or windrows. PUM (piling unmerchantable material) is accomplished by hand or tractor and is limited to slopes of 30 to 35 percent where soils are not adversely affected by tractor compaction. YUM (yarding unmerchantable material) is accomplished by cable logging techniques on slopes inaccessible to tractors. Slash material is pulled to the log landing or road, concentrated in piles, and later burned.

Understory burning can be used to reduce undesirable light fuel loads without damaging desirable residual vegetation. Strip ignition techniques are commonly used, but flame heights are kept to 1 to 2 meters so that scorching of the tree crowns does not occur.

9.4.2.2 Control Techniques. The majority of control techniques applicable to minimizing particulate emissions from agricultural open burning are also applicable to forest slash burning. These techniques consist of alternative burning methods, smoke management programs, and alternative residue treatment techniques that do not require field burning of forest fuels.

Alternative burning techniques involve extended burn periods, optimal burning procedures, and new burning technology. Present broadcast burning activities are concentrated in the Fall when fuel conditions are optimal for ignition and the risk of spot fires in the surrounding forest is minimal. Extending the burn period throughout the year provides more flexibility for optimal smoke dispersion conditions and reduces emission concentrations

expected during any one period. Implementation of optimal burning procedures can minimize the potential impact of forestry burning on air quality. These procedures optimize fuel arrangement and fire ignition for rapid, complete combustion. Fuel preparation by PUM or YUM techniques prior to burning can be used to remove larger fuel components which produce intense heat and a prolonged residual fire. Fuels which are not piled must be sufficiently concentrated to burn efficiently. Rapid ignition and mop-up techniques can also reduce particulate emissions. Complete fire mop-up activities started immediately after the flaming front of the burn has subsided will reduce residual smoldering.

Smoke management programs are designed to minimize the impact of emissions from forest slash burning on populated areas. These programs restrict burning activities to periods when specified meteorological conditions occur. These meteorological parameters, in conjunction with local topographical characteristics, are critical to the effective dispersion of pollutants.

9.4.2.2.1 Alternatives to prescribed burning. Alternatives to prescribed burning include: (1) on-site and off-site incineration, (2) the use of mechanical or chemical slash treatments, (3) slash utilization, and (4) improved logging techniques.

On-site incineration by an air curtain combustor has been used in the disposal of forest slash.[9] This device is specifically designed for wood waste combustion with little or no emissions if used properly. Slash is loaded into a long pit and ignited. Complete combustion is promoted by a blower system which directs a curtain of air diagonally downward across the burning slash. This configuration supplies sufficient combustion air and allows for the secondary combustion of gaseous and particulate emissions. Combustion temperatures are typically 750°C to 1500°C. This burning technique is not widely utilized at present because of extremely high operating costs.

Offsite incineration is also available to dispose of logging residues. This technique produces minimal emissions compared to open burning, but it may not be cost-effective because of high mechanical handling and transportation costs.

Mechanical techniques for treating slash are technically feasible and versatile. These techniques do not eliminate slash material; instead, they change the size and shape of the slash components to satisfy silvicultural

and environmental considerations. Mechanical methods include mastication, chipping, piling, scarification, and burying. Mastication is used to reduce materials less than 6 inches in diameter to a mat of wood chips and chunks by crushing or shredding. Chipping involves the transformation of both large and small materials into chips. Smaller slash residues are chipped by mobile chippers, while larger materials require PUM or YUM support operations in conjunction with large timber processer-type chippers. Piling of forest slash is used to break up the continuity of slash concentration to reduce fire hazard. Ground scarification techniques expose mineral soil for regeneration planting and break up the continuity of slash fuels to reduce fire hazards. Burying slash materials in on-site pits is feasible for smaller components. Necessary tractor support limits this technique to use in relatively flat terrain. Burying slash may have short- and long-range environmental effects that would reduce its feasibility.

Chemical herbicides can be used for temporary control of undesirable vegetation that would otherwise have to be mechanically treated or burned. Broad spectrum applications are used in brushland conversion for preparation of seedling sites. However, chemical herbicides provide only temporary vegetation control, usually less than 2 or 3 years, and they do not reduce the slash concentration. In addition, the effects of broad applications of herbicides on air and water must be considered in relation to the environmental impact of burning the forest slash.

Increased slash utilization can also reduce the need for additional treatment by mechanical, chemical, or open burning techniques. Forest residues may be used as a raw material for the production of wood pulp and timber products (particle board, flakeboard, chemicals) or as a source of supplemental fuel. All of these uses, however, require transportation of the slash to commercial areas, which may be very costly.

Present logging techniques generate considerable forest residues, which can be substantially reduced by implementing alternative logging systems. Logging techniques which reduce unusable forest slash include the following:

- Directional felling
- Multistage logging
- Minimum bucking
- Whole tree yarding
- Optimal material handling techniques

Directional felling helps minimize logging slash by reducing log breakage and thus increasing use potential. Multistage logging operations can be used to recover low-grade material that would normally remain as slash. This technique, which is used preceding or following normal logging operations, involves the use of light material handling systems designed to recover small diameter material. Minimizing the bucking of logs into uniform length classes will also optimize the utility of low-grade materials. Shattered log ends and extraneous log lengths that are bucked prior to yarding are not easily handled by standard yarding machines and, therefore, they remain on-site as slash. Whole tree yarding may be used to eliminate the need for any bucking. Optimal material handling techniques improve opportunities for slash utilization. New systems are being developed which allow yarding preprocessing and transporting of slash materials.

REFERENCES FOR SECTION 9.4

1. Geomet, Inc. Impact of Forestry Burning Upon Air Quality, A State-of-the-Knowledge Characterization in Washington and Oregon, Final Report. U.S. Environmental Protection Agency, Region X. Seattle, WA. Publication No. EPA 910/9-78-052. October 1978.

2. Fox, D. G., J. M. Pierovich, E. W. Ross, and D. V. Sandberg. Effects of Fire on the Air Resource. USDA Forest Service. Publication No. FS-8520. April 1978.

3. Monsanto Research Corp. Source Assessment of Agricultural Open Burning, State-of-the-Art. U.S. Environmental Protection Agency, Industrial Environmental Research Laboratory. Research Triangle Park, NC. Publication No. EPA 600/2-77-107A. July 1977.

4. Carroll, J. J., E. F. Darby, J. R. Goss, G. E. Miller, and J. F. Thompson. Minimizing Visible Emissions from Agricultural Burning. California Air Environment. 4:1, p 4-6. 1973.

5. McQueary, M. L., and L. C. Wayne. Calculation of Emission Factors for Agricultural Burning Activities. Pacific Environmental Services, Inc. Santa Monica, CA. November 1975.

6. Darley, E. F., S. L. German. Air Pollutant Emissions from Burning Sugar Cane and Pineapple Residues from Hawaii. Statewide Air Pollution Research Center. Riverside, CA. July 1975.

7. Goss, J. R., and G. E. Miller. Study of Abatement Methods and Meteorological Conditions for Optimum Dispersion of Particulates from Field Burning of Rice Straw -- Spring Open Field Burning Trials. NTIS Publication No. PB 235 796. June 1973.

8. Johnson, R. W., C. K. McMahon, and D. T. Ward. An Update on Particulate Emissions from Forest Fires. (Presented at 69th Annual Meeting of the Air Pollution Control Association. Portland, OR. June 1976.) p. 14

9. Geyer, O. W., and E. A. Rudulph. Minimizing Air Pollution from Open Burning with an Air Curtain Destructor. (Presented at 63rd Annual Meeting of Air Pollution Control Association. St. Louis, MO. June 1970.)

Page Intentionally Blank

9.5 CHEMICAL PROCESS INDUSTRY

The chemical process industry includes a wide variety of processes and products. The processes that have been selected for discussion here are those involving typical particulate emission rates exceeding 45 to 90 Mg per year; these processes include production of charcoal, carbon black, detergents, explosives, sulfuric acid, and chemicals.[1]

9.5.1 Charcoal Plants

Charcoal is produced by the destructive distillation or pyrolysis of wood or wood waste products in a continuous or batch process, after which the charcoal can be processed into briquets.[2,3] There are about 150 charcoal producing plants in the United States; over 50 percent of the plants are located in Missouri, and the rest are scattered throughout the country. In 1975, about 55 percent of the 590 Gg of charcoal produced was made by the continuous process and 45 percent was made by the batch process. The total nationwide particulate emissions, consisting of wood chips, char, soot, tar, oils, and pyroacids, were estimated in 1977 at 79 Gg.[3,4]

9.5.1.1 Process Description. In the batch process, wood is first placed in a kiln, which takes one to two days for 165 m^3 of wood. Next, a fire is started and the wood is pyrolyzed for five to eight days. Air flow is then stopped, and the kiln is sealed and allowed to cool for 10 to 14 days. A typical yield is 25 percent of the original charge.[3] The major emission points are the off-gas stacks from the kiln. Possible minor emissions result from raw material and product handling.

A typical continuous process consists of a multiple hearth furnace in which input material, such as hogged wood, is fed into the top as air is fed into the bottom. The typical unit produces 2.5 Mg/h with a yield of 25 percent of the original charge. Emissions range from 28 to 406 kg/Mg.[3] The major emission points are the off-gases from the furnace.

Figure 9.5-1 shows a charcoal briquetting operation in which the charcoal is crushed, mixed with a binder, and briquetted. Solids handling is the major source of particulate emissions.[3]

9.5.1.2 Emission Characteristics and Applicable Control Technologies. Because of the cyclic nature of the batch process, controls are difficult to implement. As indicated in Reference 4, about one third of the batch type kilns are controlled by oil- or gas-fired afterburner systems. Although

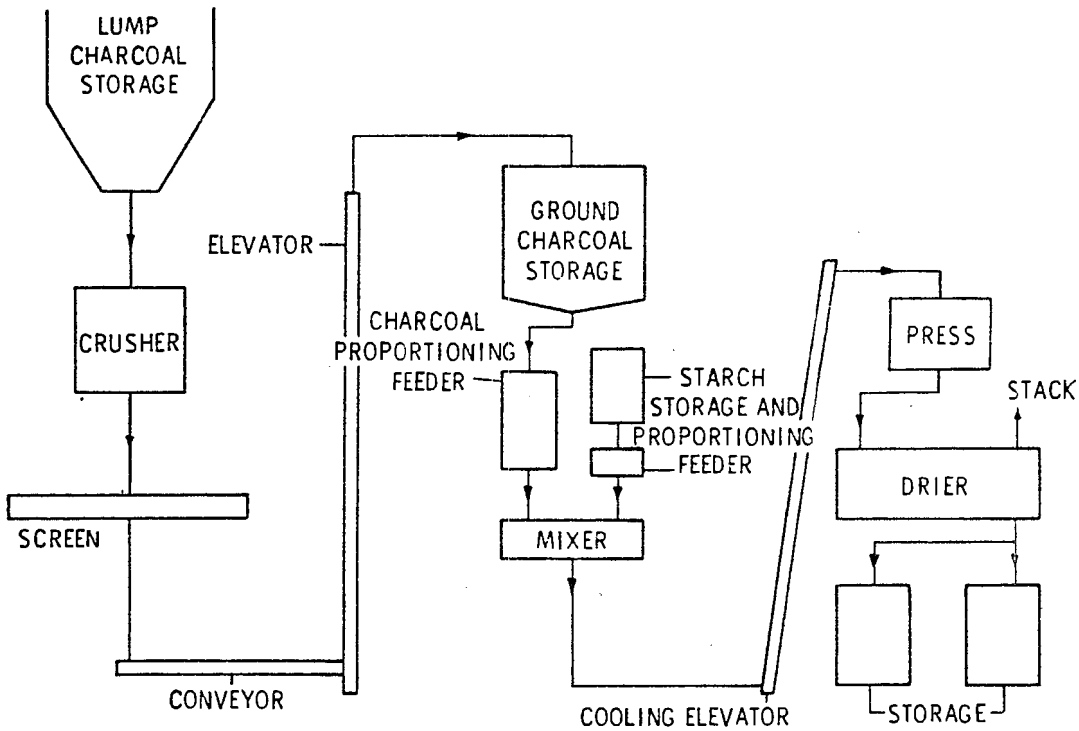

Figure 9.5-1 Charcoal briquetting flow diagram.[3]

some scrubbers are used to control particulates from batch type kilns, scrubber applications are unusual. The temperature and combustible characteristics of off-gases from continuous processes are sufficient to support combustion. Consequently, the mass of combustible particulates from continuous type processes is reduced when the off-gases are oxidized upon mixing with air. The exact particulate emission reduction effected by afterburners installed on batch type kilns or by the flaring of off-gases from continuous type processes has not been quantified. Because of the high moisture content of the gas emitted during the early stages of drying the wood charge, supplementary fuel is required to sustain the afterburner effectiveness. As the wood charge becomes sufficiently dry, the water content of the off-gas decreases and the supplementary fuel is no longer needed. The afterburner, as used in Wisconsin and Minnesota facilities, can reduce emissions 80 to 90 percent. Although these controls are designed primarily for CO and HC control, particulate matter is also reduced through combustion.[3] In 1977, the total annualized cost for the control device was $4 to $43/Mg of charcoal, which is 7 to 71 percent of the selling price of charcoal.[1]

Emissions from continuous processes are easier to control than those from batch processes, since the flow rates and compositions are nearly constant. Again, afterburners can be used, but an additional fan may be required because of the added pressure drop. Sometimes the gases from the afterburners are scrubbed for added control. A reduction of 95 percent for total emissions is reported for this technique, but the reduction of particulate matter was not singled out.[3] The gases emitted from the hearth, with an average heat content of 29 GJ/10^3 kg of charcoal produced, have been used in steam generators and to fire wood and briquet dryers.

Centrifugal collection devices (cyclones) with collection efficiencies of 65 percent or fabric filters with collection efficiencies of 99 percent have been suggested for control of emissions from briquetting processes.

9.5.2 Carbon Black (Furnace Process)

Carbon black is currently produced by two main processes: (1) the oil furnace process, used for over 90 percent of carbon black production; and (2) the thermal process. Plants range in size from 23 to 174 Gg/year and

typically operate at 80 percent of capacity; total U.S. capacity is 1.9 Tg/year. There are 19 plants in Texas and Louisiana, and other plants in California, Ohio, West Virginia, Kansas, Oklahoma, and Arkansas.[5]

9.5.2.1 Process Description. Figure 9.5-2 shows a simplified flow diagram for the furnace process.[6] Carbon black is produced by burning a mixture of hydrocarbon and/or heavy aromatic oil with a limited amount of air. After the gases are cooled by a water quench, the carbon black is filtered out for further processing. The emissions sources are the main process vent, dryer exhaust, pneumatic conveyor exhaust, bagging operations, and fugitive emissions (Figure 9.5-2).

9.5.2.2 Emission Characteristics And Applicable Control Technologies. National emissions data published in 1977 for carbon black production list particulate emissions at 7.5 Mg/year.[7] Particulate size distribution data were not given. However, the particulate type emitted is the product carbon black; the mean particulate diameter for the product varies from 0.01 to 0.4 micrometers.[8]

Almost all plants now use a bag filter in the product recovery system to achieve up to 99.95 percent recovery of carbon black, resulting in emissions of 0.07 to 0.30 g/Nm^3 (1 to less than 5 g/kg product). The bags are usually constructed of a graphite-silicone, film-coated fiberglass material, which must be kept below 230°C; the bags have an average life of 12 to 18 months and are usually cleaned by reversing the gas flow.[6]

The gases from the main process vent may be fed from the baghouse to an incinerator and/or a CO boiler to remove CO. This procedure also removes additional particulate matter and at one plant results in average emissions of particulate matter of 0.04 g/Nm^3.[9]

The dryer exhaust may also be equipped with a baghouse but does not have the economic incentive of product recovery.[6] Fiberglass bags are normally used because the operating temperature generally exceeds 200°C. One manufacturer uses a water scrubbing system to control dryer emissions.[6] The scrubber reduces the particulate emissions to 0.7 g/kg product. The scrubber is a combined venturi and tangential entry vertical cylinder scrubber. Some of the scrubber slurry is recycled to the scrubber, and the rest is used as quenching water for the reactor off-gases. The scrubber uses about 300 L water/1000 Nm^3 gas and has a pressure drop of 3.7 kPa.

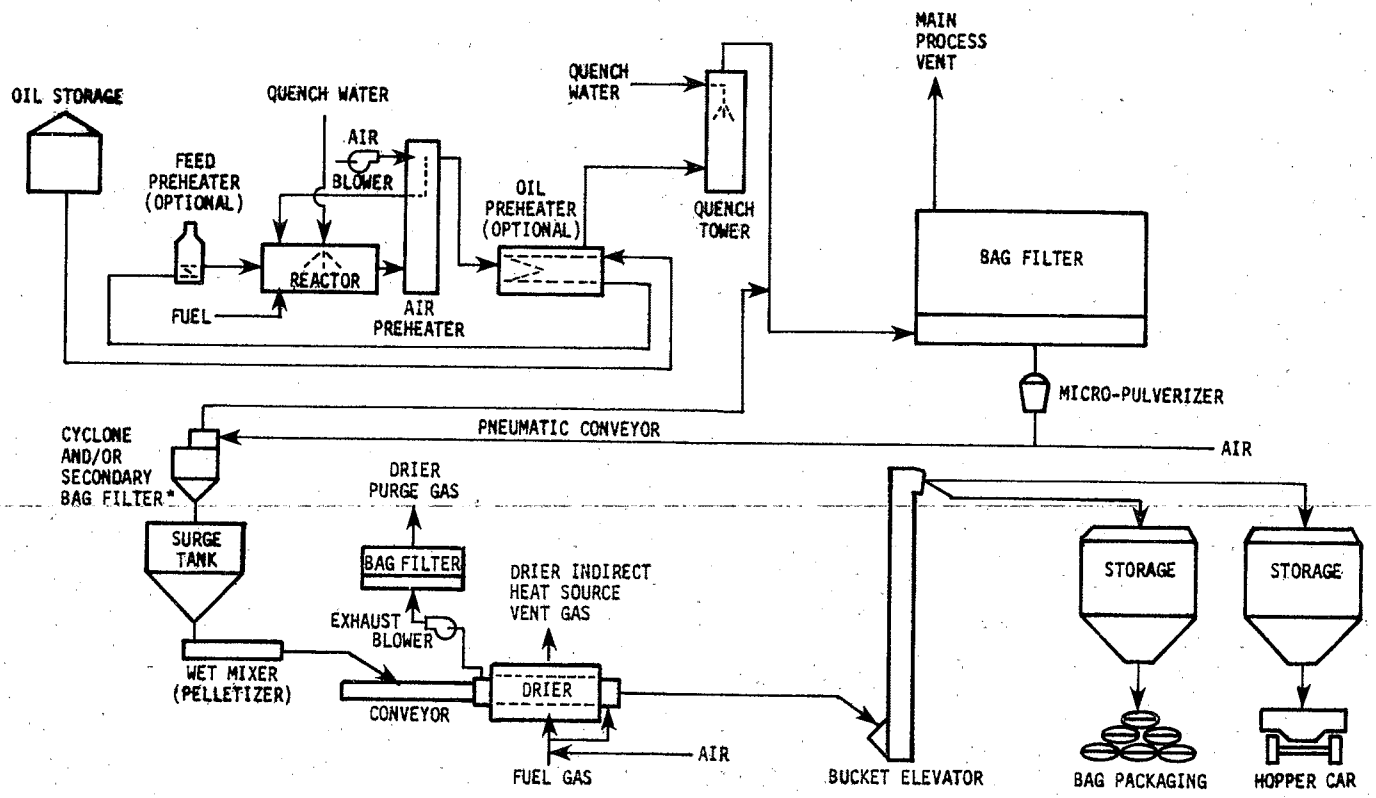

*If bag filter is employed, filtered gas is vented to atmosphere.

Figure 9.5-2 Carbon black process.[6]

The pneumatic conveyor exhaust may also be equipped with a baghouse. However, because of the lower operating temperatures (essentially ambient), wool, cotton, or orlon bags can be used.[5] The filtered air is recycled to the compressor, resulting in a closed-loop air system.[5] Cyclones may be used in place of a fabric filter depending on particulate loading and size distribution.

Other particulate sources are bagging operations and fugitive emissions (from torn bags and leaks). Emissions from these sources can be controlled with improved operating methods, preventive maintenance, and a vacuum cleaning system. The vacuum cleaning system, used to clean up spills, can also be used to vacuum-package the bags. A cyclone and filter can be used in the exhaust of the vacuumed system.

9.5.3 Detergent Manufacturing Plants

The main source of particulate emissions from a detergent plant is the spray drying operation in which the detergent slurry is converted to a powder. Some particulate matter is also emitted in the process used to make the slurry and in the post-dryer operation where the powder is cooled, blended, and packaged.[10]

9.5.3.1 Source Description and Applicable Control Technologies. Figure 9.5-3 shows a flow diagram for a spray-dryer. The detergent surfactant is produced by sulfonation of a detergent alkylate, from which there are possible acid mist (SO_2, SO_3, H_2SO_4) emissions.[10]

Methods suggested for controlling emissions from the spray-dryer include a wet scrubber and demister, two wet scrubbers in series, a cyclone and wet scrubber, a cyclone and scrubber-ESP unit, or a cyclone and fabric filter.[10,11,12,13] In all cases the collected slurries and powders from the primary collectors may be recycled back to the process. Typical particle loadings from the spray dryer are around 0.2 g/Nm^3, with the temperature of the stream around 100°C.

Predicted collection efficiencies for a wet scrubber used alone are 98.0 percent at a pressure drop of 2.5 kPa across the scrubber and 99.8 percent at a pressure drop of 10.0 kPa. The scrubber operates with a recirculation slurry of 40 to 45 wt percent solids, with the slurry in the recycle tank being maintained at a temperature of approximately 40°C.[11]

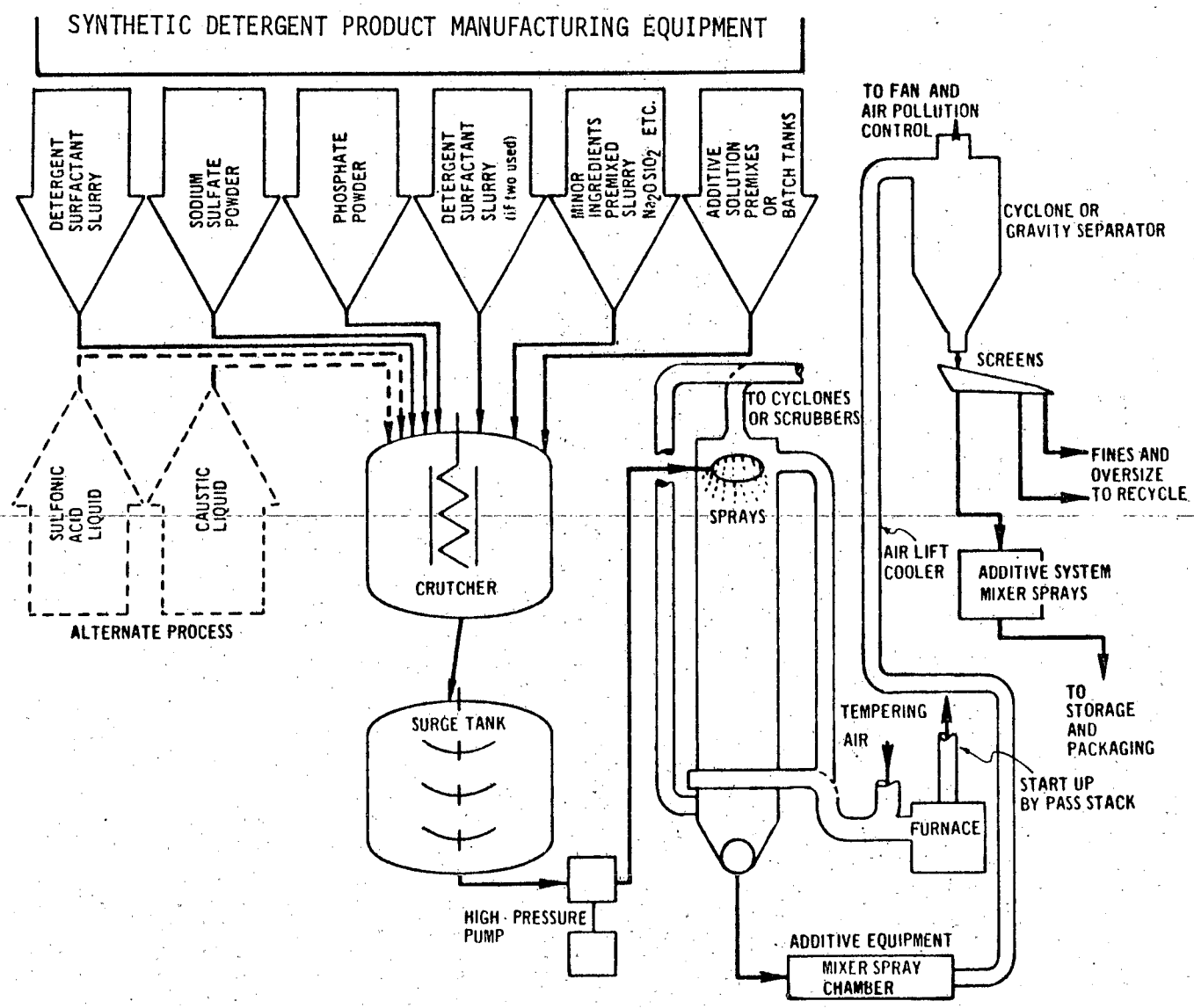

Figure 9.5-3 Detergent spray-drying with tower equipped for either cocurrent or countercurrent operation - dampers in countercurrent mode of operation.[10]

A second scrubber or demister may be used to capture emissions from the first scrubber. The percent solids in this scrubber is considerably less than in the first scrubber.

For a dryer exhaust cleaning system consisting of a cyclone followed by a fabric filter, predicted operating conditions and equipment type are available. The fabric filter is the pulse jet type with a maximum air-to-cloth ratio of 6 to 1 and a pressure drop of 1.5 kPa. The cyclone is designed to have a collection efficiency of 85.2 percent and the fabric filter 95.9 percent for a total collection efficiency of 99.4 percent.[11]

A cyclone followed by a combined scrubber-ESP device is used by one large detergent manufacturer. Emission test data indicated a cyclone control efficiency of 98.2% and a scrubber-ESP control efficiency of 53.7% for a total collection efficiency of 99.2%.[14]

In some plants, the dried detergent beads are transferred from the spray dryer to the dry product storage via a pneumatic conveying system. The pneumatic air also acts to cool the detergent beads. Most systems use a cyclone to separate the detergent beads from the pneumatic air. A typical particulate loading downstream of the cyclone is listed as 0.085 g/Nm^3 with the gas at 40°C. If further treatment of the exhaust gas is desired, a fabric filter may be used.[11] This pulse jet fabric filter is specified at a maximum air-to-cloth ratio of 6 to 1 and a pressure drop of 1.5 kPa; collection efficiency is predicted to be 99.8 percent. The collected fines can be returned to the product storage tank. This control technique has little environmental impact on water and solid waste because the collected particulate matter can be recycled back to the process.

9.5.4 Explosives Industry

There are two main types of explosives: (1) detonating (high explosives) and (2) deflagrating (low explosives). High explosives explode with great violence. Low explosives do not explode but burn rapidly. Examples of these two explosives are as follows:[2]

1. Detonating:
   a. Primary or initiating (detonators): lead azide, mercury fulminate, lead styphnate (lead trinitroresorcinate), diazonitrophenol, nitromannite.

b. Secondary: TNT-AN (trinitrotoluene-ammonium nitrate), TetylP (2,4,6-trinitrophenyl-methylnitramine), PETN (pentaerythritol tetranitrate), RDX (sym-trimethylene trinitramine), TNT (trinitrotoluene), ammonium picrate, picric acid, DNT (dinitrotoluene), and EDNA (ethylenedinitramine).

2. Deflagrating: Smokeless powder, black powder, NG (nitroglycerin), DNT, nitrocotton, ammonium nitrate fuel oil blasting compounds.

There is little available literature that identifies particulate matter emissions during the manufacture of explosives, except for the production of TNT. Some of the processes emit sulfuric acid mists which can be controlled by the methods discussed under sulfuric acid (Section 9.5-6). Most of the processes involve some type of nitration, and sulfuric acid is usually used as part of the process and/or to help recover nitric acid, HNO_3.[15] Ammonium nitrate production, which can be a source of particulate emissions, is discussed in Section 9.6.

TNT Production--Figure 9.5-4 shows a flow diagram for the production of TNT by the batch process.[16] TNT is produced from toluene and nitric acid. In addition to the batch process, TNT can be produced by a continuous process.[17] A waste stream called red water is generated during production via either the batch or continuous process. The waste is disposed of by incineration, which results in emissions of particulate matter. Wet scrubbers have been used to reduce these emissions.[15] Reference 18 discusses red water incineration but not particulate control.

9.5.5 Thermal Process Phosphoric Acid Manufacturing

Essentially all the phosphoric acid (H_3PO_4) produced in the U.S. is manufactured by either the wet process or the thermal process. Wet process acid is manufactured by treating phosphate rock with sulfuric acid; the technique is used primarily in fertilizer manufacturing. Thermal process phosphoric acid is produced from elemental phosphorus; the acid is used where a high-quality product is required such as for food-grade acid and industrial phosphates.

9.5.5.1 Process Description. In the thermal process, phosphoric acid is manufactured using elemental phosphorus, air, and water. Figure 9.5-5 presents a flow diagram for the thermal process and subsequent acid purification.[19]

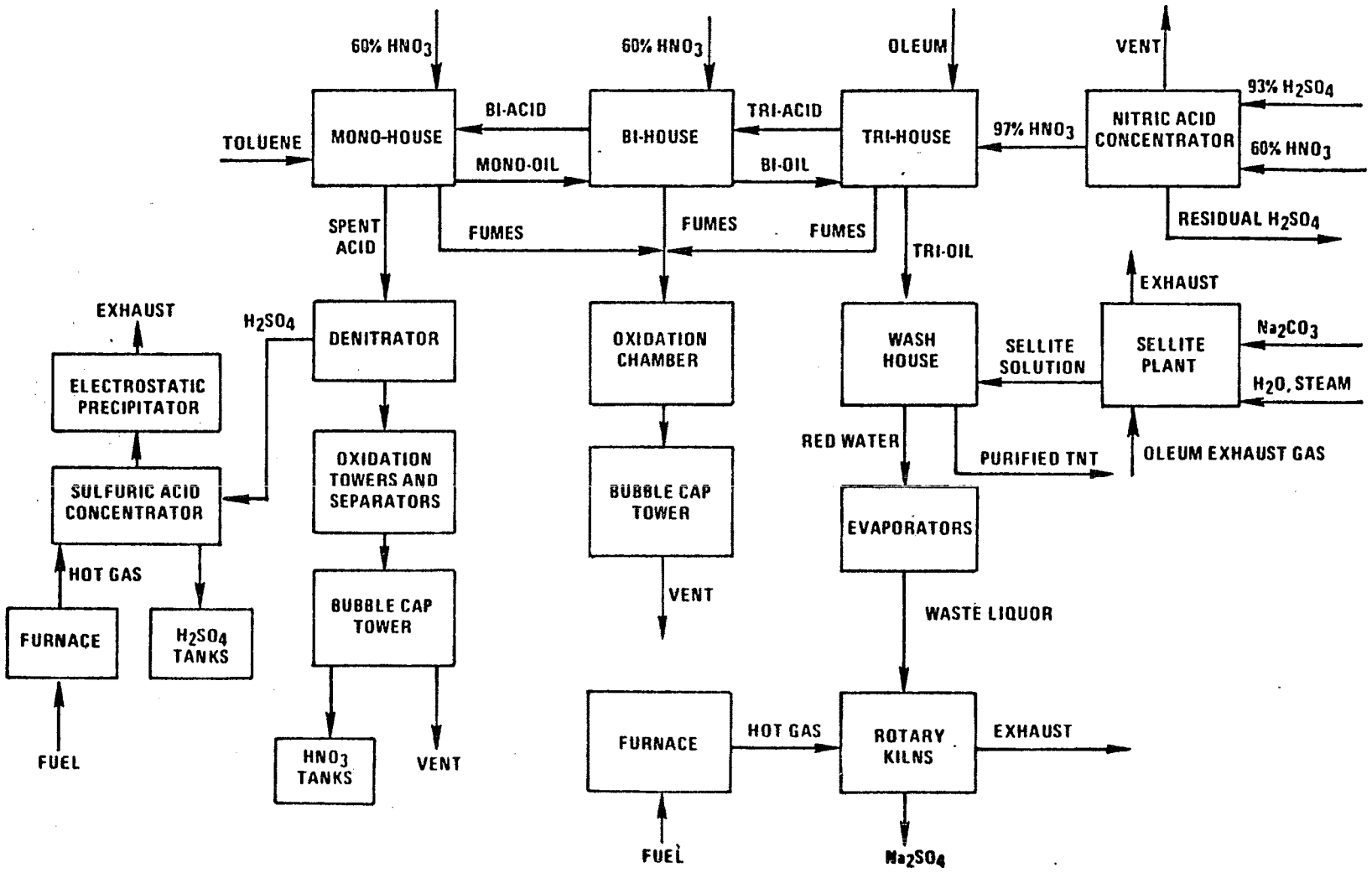

Figure 9.5-4 TNT production by batch process.[16]

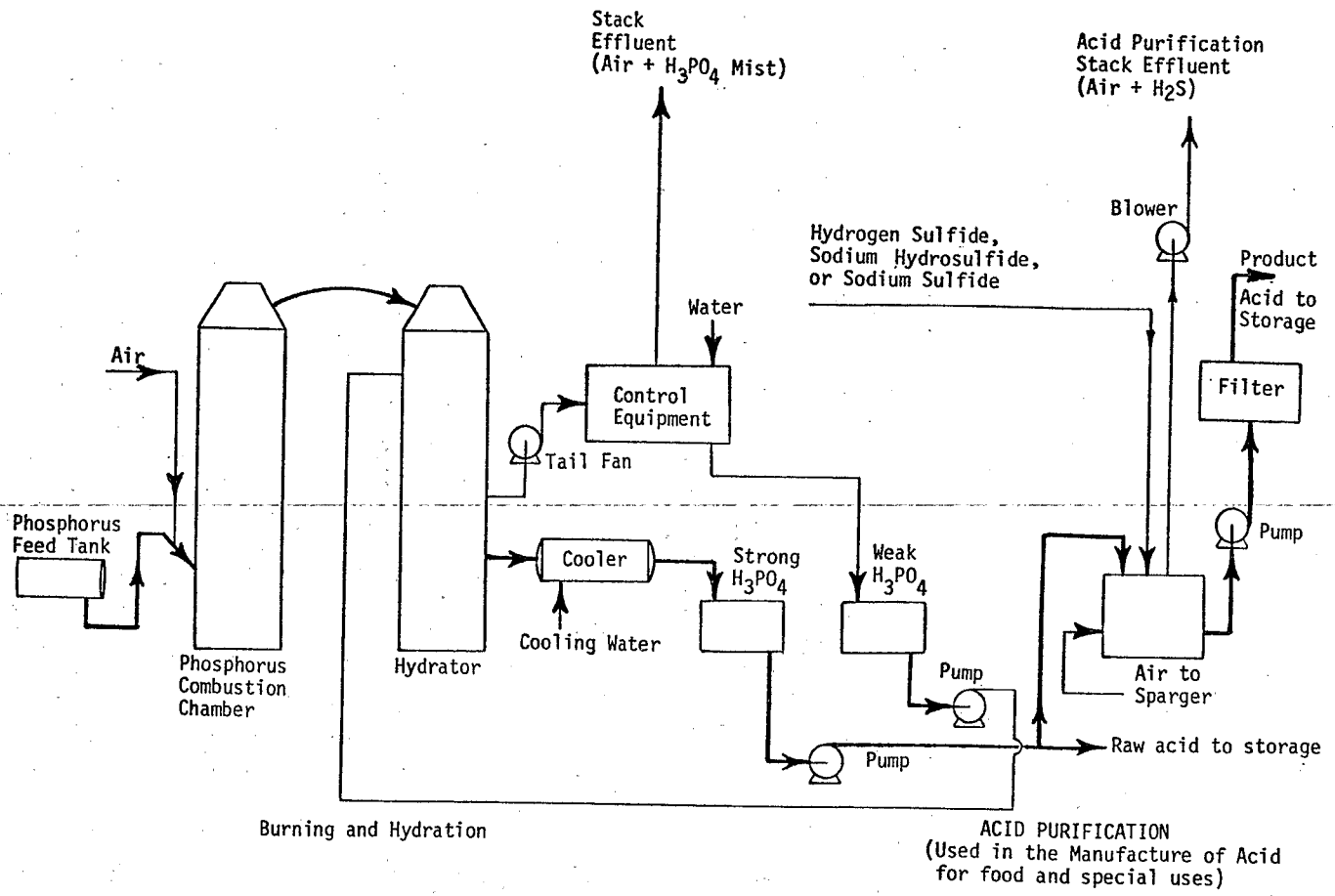

Figure 9.5-5 Flow diagram for typical thermal-process phosphoric acid plant.[19]

In the combustion chamber, phosphorus combines with oxygen to form phosphorus pentoxide by the following reaction:

$$P_4 + 5O_2 \longrightarrow P_4O_{10}$$

The phosphorus pentoxide passes to the hydrator where it reacts with water and/or an aqueous solution of weak phosphoric acid. The hydration reaction is as follows:

$$P_4O_{10} + 6H_2O \longrightarrow 4H_3PO_4$$

The product acid is drained from the bottom of the hydrator and pumped to storage.

The 1978 production of thermal process phosphoric acid was about 627,000 Mg as 100% P_2O_5.[20] Average plant production is about 27,250 Mg/yr.[20] Typical thermal process plant parameters are shown in Table 9.5-1.

9.5.5.2 Emission Characteristics and Applicable Control Technologies. The primary pollutant emitted from the thermal process is particulate matter in the form of phosphoric acid mist. Particle size of the acid mist is reported to range from 0.4 to 2.6 micrometers with a mass median diameter of 1.6 micrometers.[19] Several control devices can be applied to agglomerate the mist particles and capture the liquid particulates. These devices include packed towers, electrostatic precipitators, scrubbers, fiber mist eliminators, and wire mesh contactors. Operating parameters and performance of selected control devices installed on thermal process phosphoric acid plants are presented in Table 9.5-2.[19]

9.5.6 Sulfuric Acid

About 150 sulfuric acid plants operate in the U.S. with a current annual production capacity of 42 Tg.[7] Of the 41 Tg manufactured in 1978, 99.9 percent was produced by the contact process.[21] Sixty-eight percent of this sulfuric acid was produced from elemental sulfur; 4.5 percent from iron pyrites; 9 percent from smelter tail-gas; and 18.5 percent from hydrogen sulfide, spent alkylation acid, and acid sludge from refineries.[22]

TABLE 9.5-1. TYPICAL THERMAL PROCESS PHOSPHORIC ACID STACK PARAMETERS[20]

Stack height		23 m (75 ft)
Stack diameter		1.2 m (4 ft)
Stack gas temperature		60°C (140°F)
Stack flow rate		
range:	900 to 4100 m^3/Mg product (35,000 to 160,000 scf/ton product)	
	1.6 to 14.3 m^3/s (3400 to 30,200 scfm)	
average:	7.1 m^3/s (15,000 acfm)	

Table 9.5-2. EMISSION AND OPERATING DATA FOR THERMAL PROCESS PHOSPHORIC ACID PLANTS[19]

Control device	Packed tower	Venturi scrubber		Glass fiber mist eliminator		Wire-mesh contactor
Phosphorus feed rate - K_g/hr	2600	2721	2404	1829	5035	3629
Gas flow rate m^3/sec	3.27	3.27	3.11	2.9	9.17	5.78
Stack gas temp = °C	79	61	94	82	83	78
Collector pressure drop kPa	0.37	12.9	8.2	5.5	5.3	9.7
Superficial gas velocity in collector m/sec	0.61	61.3[a] 1.8[b]	100[a]	3.96	0.12	8.23
Acid mist to collector g/Nm^3	23	211.6	22.1	8.9	54.5	94.3
Acid mist from collector g/Nm^3	0.16	0.24	0.53	0.32	0.009	0.02
Plume opacity	medium	light	100%	medium	0%	100%
Collector efficiency %	99.4	99.95	97.5	96	99.9	99.9

[a] Venturi.
[b] Separator.

9.5.6.1 Source Description. Figure 9.5-6 is a flow sheet of a process for producing sulfuric acid from burning elemental sulfur.[23] The elemental sulfur is burned to SO_2, the SO_2 is catalytically oxidized to SO_3, and then the SO_3 is absorbed in 98 percent H_2SO_4 to produce sulfuric acid. Water is mixed with the strong acid to maintain the desired acid concentration. Some plants also produce oleum, which is a solution of SO_3 and sulfuric acid.

9.5.6.2 Emission Characteristics And Applicable Control Technologies. The uncontrolled acid mist emissions from the absorption tower for typical plants are 70 to 700 mg/Nm^3 or 0.2 to 2 g/kg acid from a plant producing no oleum and 175 to 1750 mg/Nm^3 or 0.5 to 5 g/kg acid from a plant producing oleum.[23] Emission factors given in Reference 24 for five different types of sulfur-bearing process feeds are within these ranges.

Table 9.5-3 shows a particle size distribution for uncontrolled acid mist emissions. It can be seen that oleum production results in mists with smaller particle sizes, and that stronger oleums emit smaller particle sizes than weaker oleums.

Standards of performance have been set for SO_2 and acid mist from new and modified control process sulfuric acid and oleum facilities that burn elemental sulfur, alkylation acid, hydrogen sulfide, organic sulfides, or acid sludge.

The standard does not apply to acid plants used as SO_2 control systems, to chamber process plants, to acid concentrators, or to oleum storage and transfer facilities.

Standards of performance for acid mist limit the discharge into the atmosphere from any affected facility of any gases which:

(1) Contain acid mist, expressed as H_2SO_4, in excess of 0.075 kg per metric ton of acid produced (0.15 lb per ton), the production being expressed as 100 percent H_2SO_4.

(2) Exhibit 10 percent opacity or greater.

The U.S. EPA guidelines for States for the control of sulfuric acid mist emissions from existing sulfuric acid plants limit these emissions to 0.25g acid mist per kg (0.50 lb/ton) of 100 percent H_2SO_4 produced.[23]

The best available control technique for sulfuric acid mist is the fiber mist eliminator. Three types of fiber mist eliminators are currently in use: (1) vertical tubes, (2) vertical panels, and (3) horizontal dual

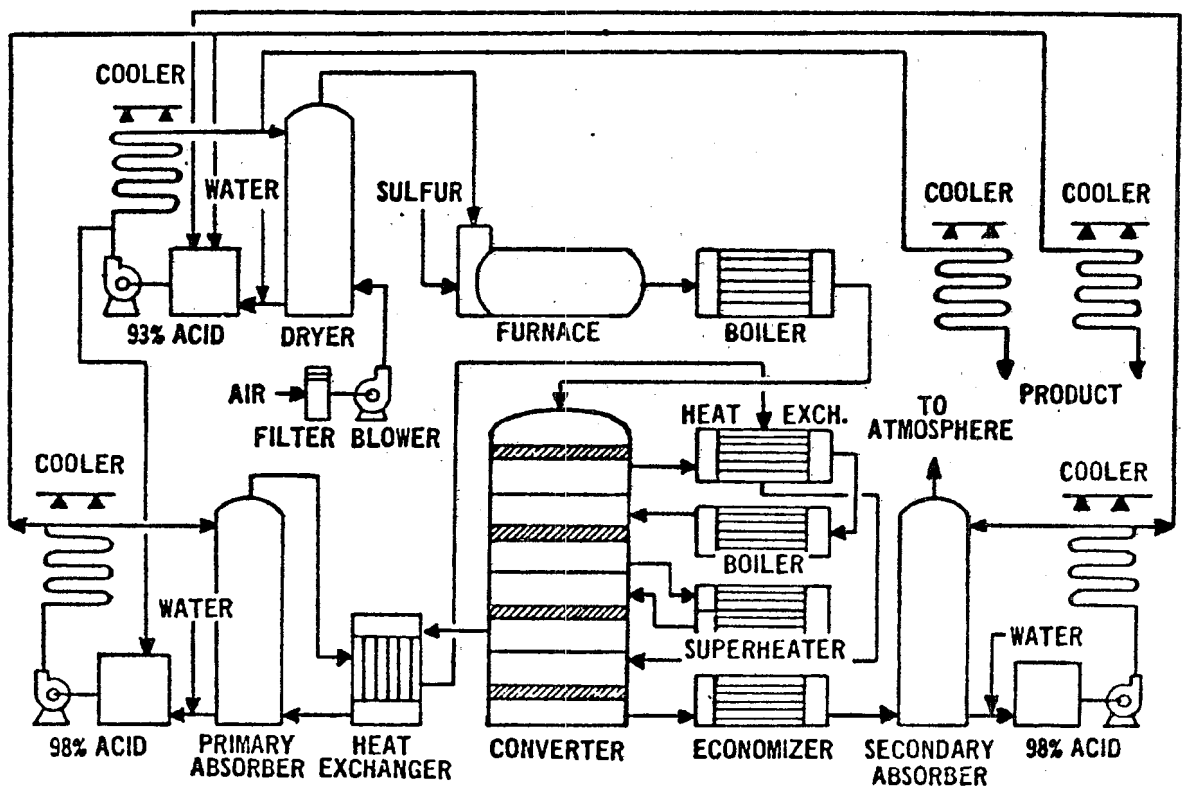

Figure 9.5-6 Contact-process sulfuric acid plant burning elemental sulfur.[23]

Table 9.5-3. PARTICLE SIZE DISTRIBUTIONS IN SELECTED SULFURIC ACID PLANT ABSORBER EFFLUENTS.[23]

Particle diameter, micrometers	Cumulative weight percent smaller than stated size		
	Acid production only	20% oleum production	32% oleum production
0.2	--	0.4	3.6
0.4	--	2.0	16.0
0.6	1	4.8	30.0
0.8	7	8.0	42.0
1.0	12	11.6	53.0
1.5	21	48.0	86.5
2.0	40	84.5	97.0

pads. Vertical tube eliminators require superficial gas velocities of 0.1 to 0.2m/s, operate at pressure drops of 1.3 to 3.7 kPa, and have a large turn-down ratio. Collection efficiencies of 99.3 percent are reported for these collectors. For vertical tube eliminators installed on single absorption plants, emissions as low as 7.1 mg/Nm3 have been reported.[23] Vertical panels are designed for superficial gas velocities of 2.0 to 2.5 m/s and operate at pressure drops of 2.0 kPa. A collection efficiency of 90 percent is reported for vertical panels. For vertical panels installed on single absorption plants, emissions as low as 19 mg/Nm^3 have been reported. Horizontal dual pads have a superficial gas velocity of about 160 m/min and pressure drops of 2.2 kPa. Collection efficiencies of 90 percent are reported for horizontal dual pads. Emissions as low as 7.1 mg/Nm^3 have been reported for the use of these pads on a single absorption plant.[23]

In all cases, since the collected acid mist can be recycled to the absorption column, there are no additional environmental effects.

9.5.7 Phthalic Anhydride

Phthalic anhydride is manufactured by the catalytic vapor phase oxidation of o-xylene or naphthalene at 10 plants in the continental U.S. and one plant (type not identified) in Puerto Rico. Seven plants in the United States use o-xylene and three use naphthalene. Plants located in New Jersey, Pennsylvania, Illinois, California, Texas, and Louisiana have a total capacity of 500 Gr/yr. The total emissions of particulate matter from o-xylene processes are 909 Mg; from naphthalene, 244 Mg per year. Included in particulate matter emissions are organic vapors which, upon cooling, may form particulate matter downstream from the plant.[25]

9.5.7.1 Source Description. Flow sheets for the manufacture of phthalic anhydride from o-xylene or naphthalene are shown in Figures 9.5-7 and 9.5-8. The o-xylene process uses a fixed bed reactor while the naphthalene process uses a fluid bed. The major particulate emissions points for both processes are the main process incinerator and the secondary incinerator. Reference 25 lists average controlled emission factors for particulate matter as 1.3 g/kg product. Flaker and bagging operations give uncontrolled emissions of 0.20 g/kg product which are usually controlled to 0.002 g/kg product. Reference 25 does not list any particulate size distribution.

9.5.7.2 Application Control Technologies. One control technique for the

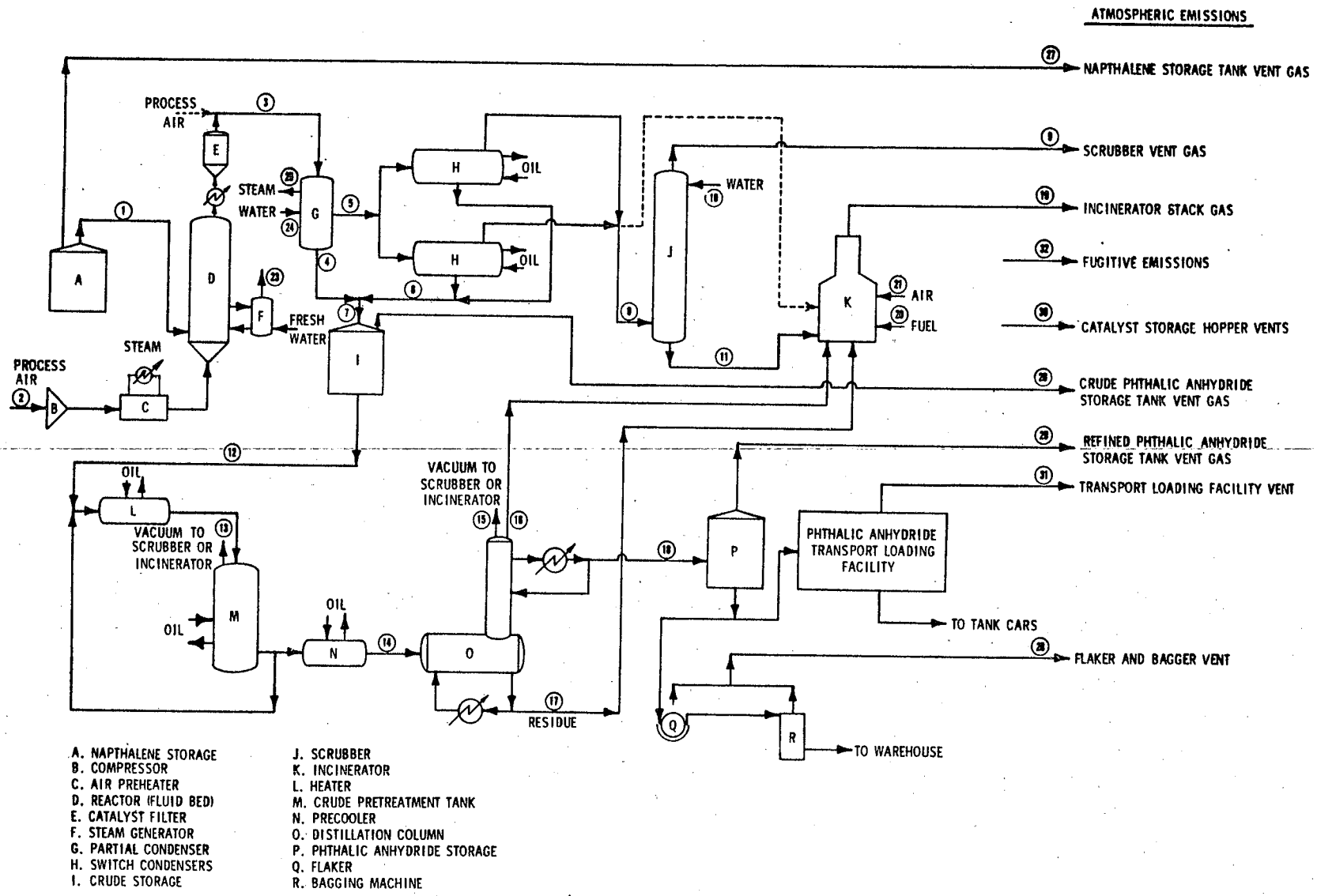

Figure 9.5-7 Badger-Sherman-Williams Process for manufacture of phthalic anhydride from naphthalene.[25]

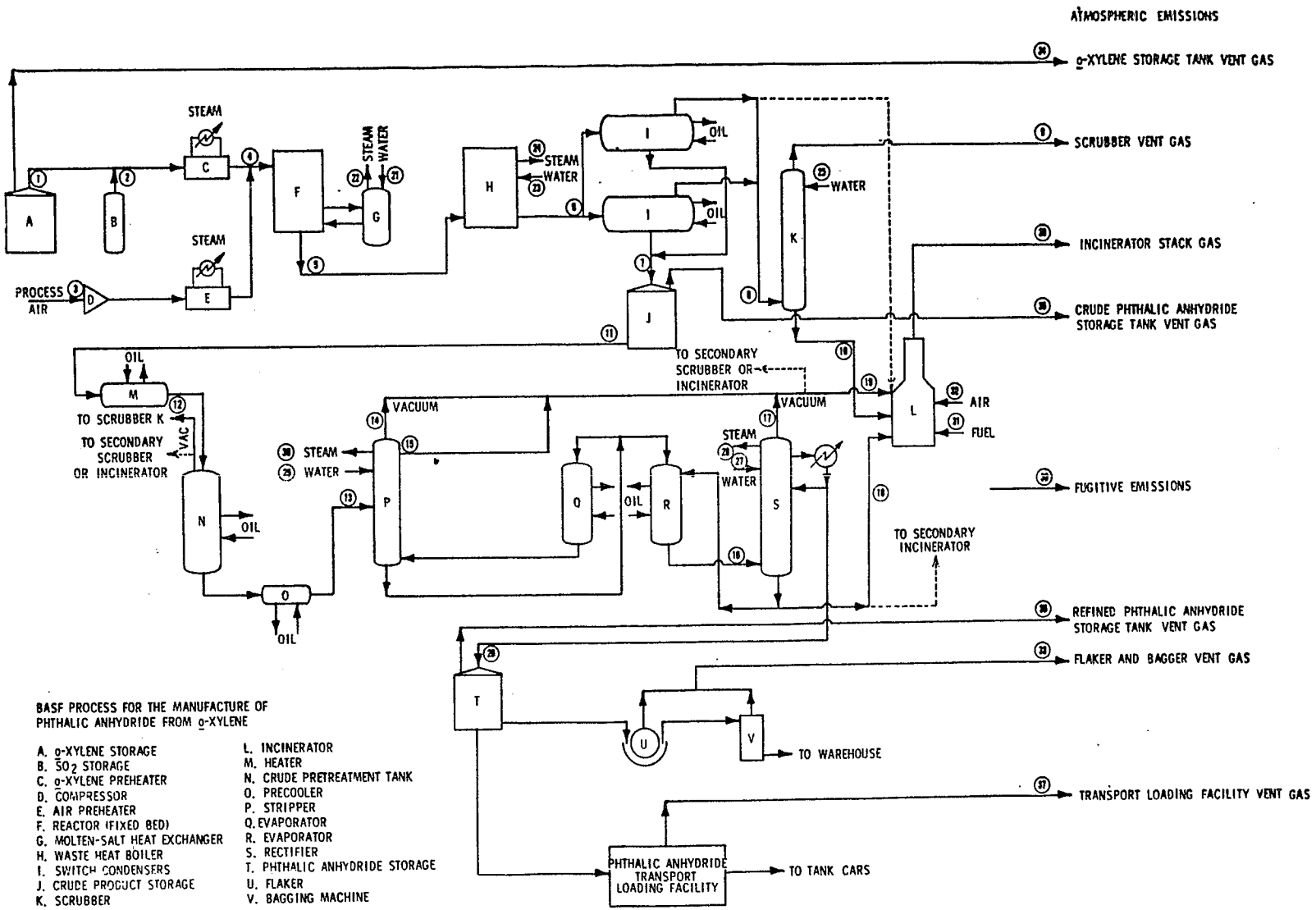

Figure 9.5-8 BASF Process for manufacture of phthalic anhydride from o-xylene.[25]

main process vent is a scrubber plus a thermal incinerator. In this control method, the off-gases pass through a wet scrubber with the scrubber solution being fed to an incinerator. This technique is used primarily for hydrocarbon emissions which could condense as the gas cools, causing particulate emissions downstream. Some particulate matter is emitted from the scrubber vent and the incinerator due to impurities in the make-up water. Incinerators can also be used on the off-gas stream. The advantage of using a wet scrubber for the off-gas is that the size of the incinerator required is reduced. However, CO emissions, which are emitted from the scrubber overhead, are not controlled.[26] Heat recovery systems can be added to the incinerator to save energy costs.

Based on actual measurements, emissions from a 59 Gg/year plant equipped with a wet scrubber and scrubber solution incinerator for control of hydrocarbon emissions are expected to be as follows:

- From the scrubber vent, 0.076 kg/min of particulate matter from the make-up water impurities and 0.30 kg/min of condensed hydrocarbons. The gas flow rate from the scrubber overhead is 3460 Nm^3/min at 38°C.
- From the incinerator stack, 0.05 kg/min of particulate matter from the make-up water inpurities and 0.06 kg/min of condensed hydrocarbons. The gas flow rate from the incinerator is 275 Nm^3/min at 927°C.[26]

For controlling emissions from the product storage vents, a condenser can be placed on the vent to collect the phthalic anhydride and return it to the system. Again, this is a hydrocarbon control technique that could prevent particulate emissions from forming downstream.[26]

9.5.8 Hydrogen Fluoride (Hydrofluoric Acid)

At present, there are 11 hydrofluoric acid plants in the U.S.--three in Louisiana, three in Texas, and one each in California, New Jersey, Ohio, West Virginia, and Kentucky. In 1977, these plants produced 240 Gg of acid.[27]

9.5.8.1 Source Description. A flow diagram for the manufacture of hydrofluoric acid is shown in Figure 9.5-9. Hydrofluoric acid is produced by reacting fluorspar with sulfuric acid.[27] The sources of particulate emissions are spar (fluorspar) drying and the fugitive emissions from handling and storing the spar. There are also fluoride emissions from the process

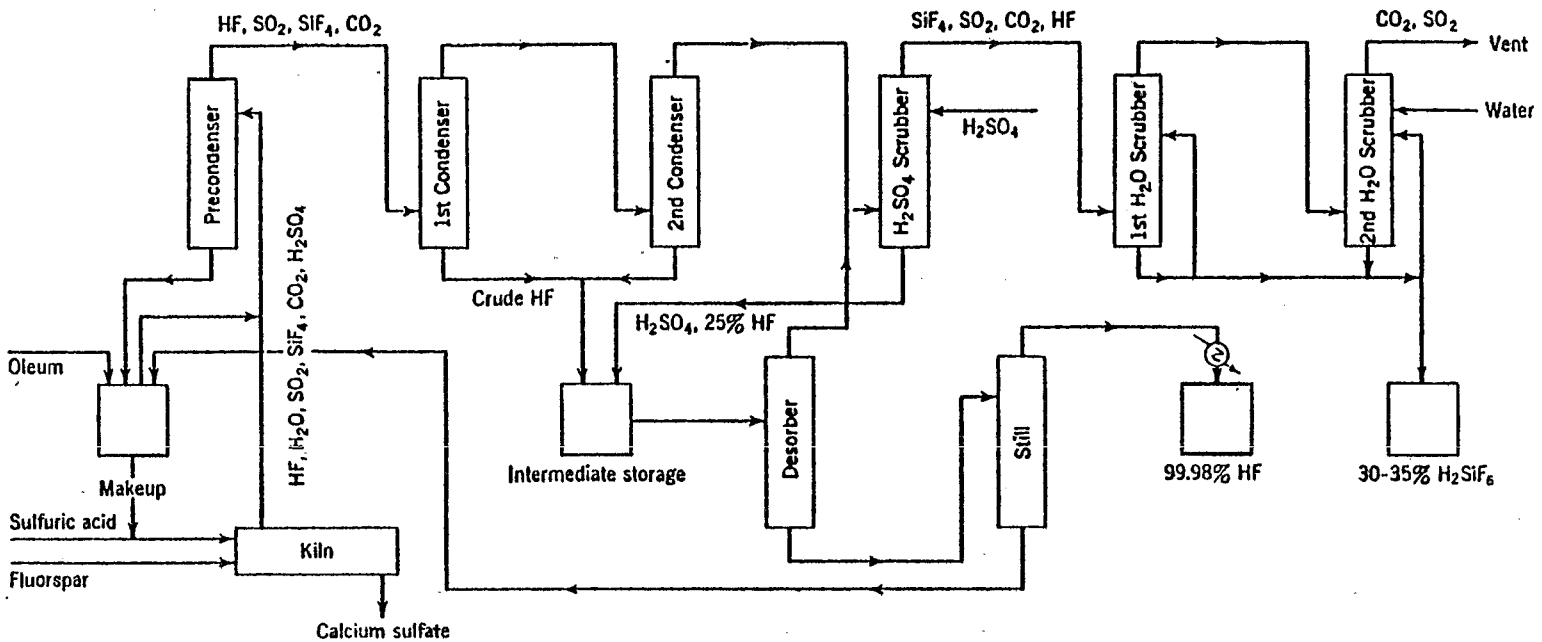

Figure 9.5-9 Schematic flow diagram for the manufacture of hydrogen floride.[27]

and possible combustion related emissions from the kiln.

9.5.8.2 Applicable Control Technologies. Most plants use a cyclone or baghouse to control particulate emissions from the dryer.[27] The baghouse, usually cleaned by pulsed air, gives 99 percent collection efficiency. Based on plant measurements, particulate emissions are 1.8 to 2.4 kg/h for gas flow rates of 140 to 370 m^3/min.

For emissions which occur during storage, the recommended control is a silo with a baghouse on the vent.[27] At one plant, the particulate emission rate from the silo baghouse was 9 kg/h for a gas flow rate of 45 m^3/min. For both sources, dryer and silo, the collected dust can probably be recycled.

9.5.9 Boron Compounds

Borax ($Na_2B_4O_7.10H_2O$) is produced from mines located near Boron, California, and from the brines of Searles Lake, also in California.[28] The borax could be used as is, converted to boric acid, or used as a source of boron for other compounds. On a B_2O_3 basis, 650 Gg of boron compounds were produced in 1975.[29]

9.5.9.1 Source Description. In producing borax from mining operations, several solutions and thickening steps are involved.[30] If anhydrous borax is needed, the borax is fed to a borax fusing furnace. Figure 9.5-10 shows a flow diagram for producing borax from lake brines.[2] Figure 9.5-11 shows a flow diagram for producing boric acid from borax and sulfuric acid.[28] Boric acid and boric oxide (an anhydrous form of boric acid) are used to produce boron carbide, metal borides, boron alloys, and other boron compounds.[30]

The various processing steps that emit particulate matter and the equipment used to control emissions are summarized in Table 9.5-4. The particulate size varies from 1 to 45 micrometers.

9.5.9.2 Emission Characteristics and Applicable Control Technologies. References 31 and 32 describe scrubber systems for controlling emissions from borax fusing furnaces. As the borax dries, the water vapor pressure inside the crystal ruptures the crystal, producing small particles. References 29 and 32 describe an impact type scrubber and a venturi scrubber that have been used, respectively, to control emissions from borax fusing furnaces.

An impact type scrubber which can be added to an existing plant has been developed for particulate control. In the first section of the scrubber, the

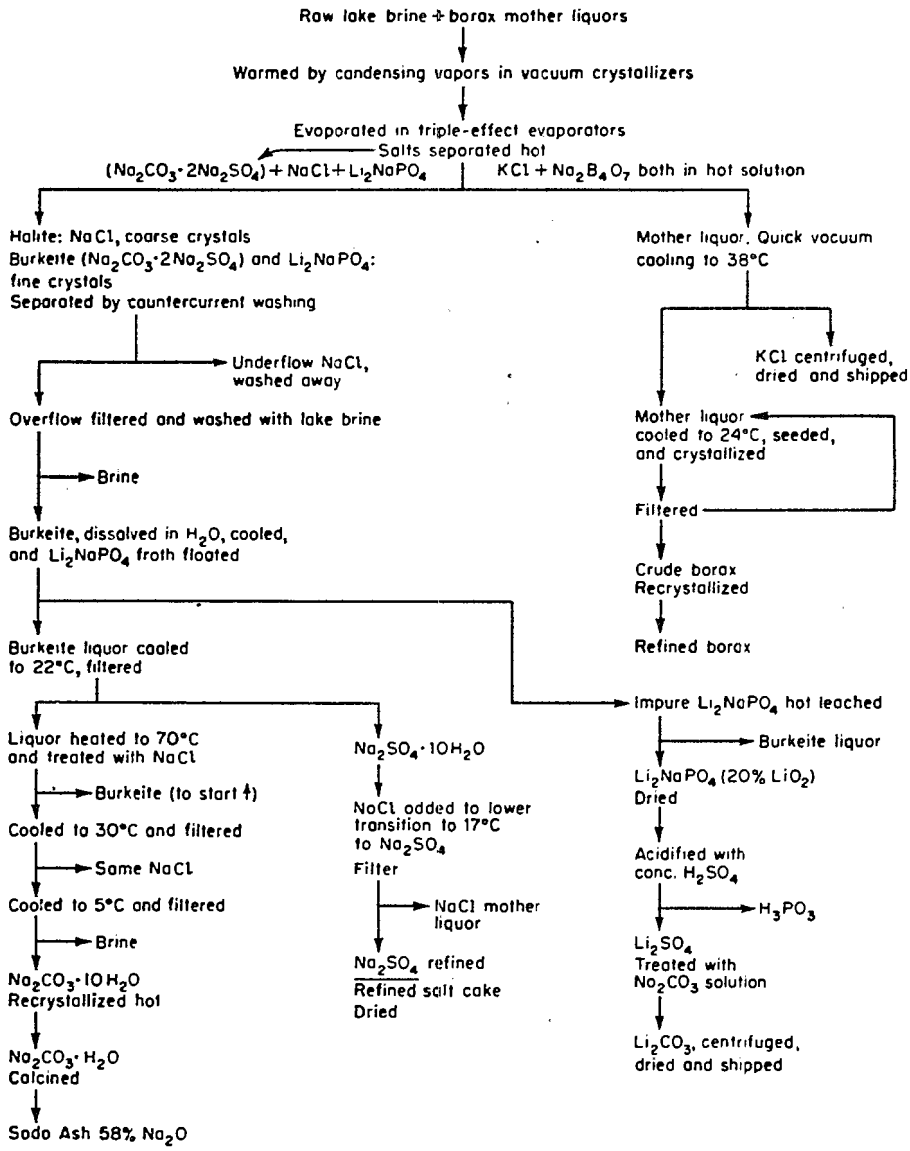

Figure 9.5-10 Procedures for recovering borax - Trona Processes.[2]

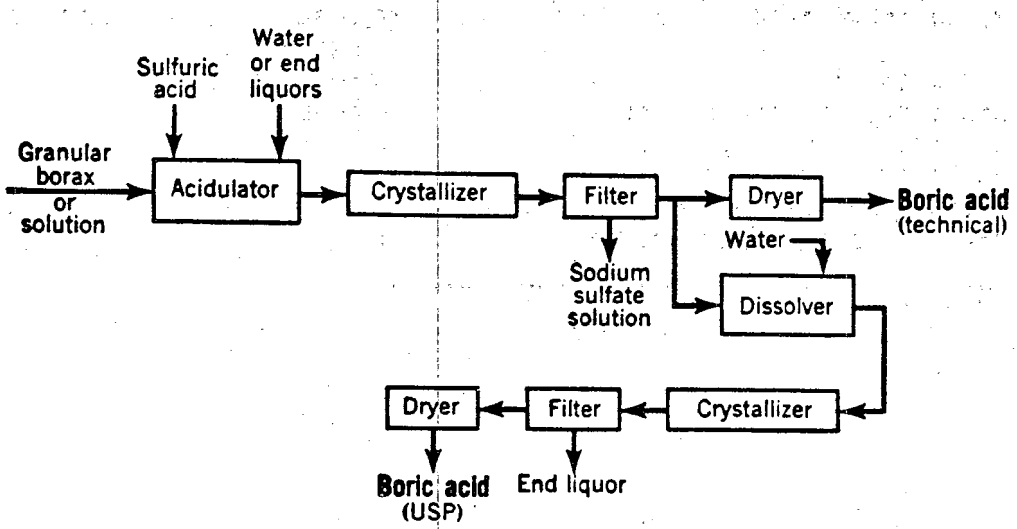

Figure 9.5-11 Borac acid from borax by acidulation.[28]

Table 9.5-4. TYPICAL APPLICATIONS AIR POLLUTION CONTROL EQUIPMENT[30]

Procedure	Control equipment
Borax refining	Cyclone, scrubber, and baghouse
Anhydrous borax	Cyclone, scrubber, and baghouse
Borax calcining and melting	Cyclone, baghouse, and electrostatic precipitator electrostatic precipitator
Boric acid drying	Cyclone and scrubber
Borax drying	Baghouse
Borax dehydration	Cyclone and electrostatic precipitator
Borax packing	Cyclone and baghouse
Dehydrated borax packing	Baghouse
Dehydrated borax grinding	Baghouse
Boric oxide production	Scrubber and baghouse
Boron trichloride production	Scrubber
Boron tribromide production	Scrubber

gas is quenched with water, helping to form large particles. Next, the gases go through a low velocity impingement section where the larger particles are removed. Then they enter a high velocity impingement section and leave through a mist eliminator. A 97 percent collection efficiency can be achieved at a pressure drop of about 5.5 kPa. This control effectiveness results in an emission level of 0.2 g/Nm^3 from the furnace.[31]

A venturi scrubber has been developed with a 97.5 percent collection efficiency. For a gas flow rate of 20 m^3/s at 80°C, 33 L/s of scrubbing liquor is used and the pressure drop is 10.8 kPa. This control method reduces emissions to 0.02 to 0.04 g/Nm^3 with a mass median aerodynamic particle diameter of 0.2 to 1.1 micrometer.

Table 9.5-5 represents combined emission tests of a borax-fusing furnace controlled with a venturi scrubber. The design pressure drop of the scrubber was 11 kPa at 32 NM^3/sec. The furnace was operating between 5.6 and 8.4 Tons/hr, which is 50 to 75% of capacity. These computer modeled data are from the Fine Particulate Emissions Information System (FPEIS) repository.

9.5.10 Pesticide Manufacturing

In 1974, 643 Gg of synthetic organic pesticides were produced. Inorganic pesticides account for an additional 130 Gg. Producers are scattered throughout the U.S. Formulator plants, where the active pesticides are mixed with inert materials for use by the consumer, are located in almost every State. Tables 9.5-6 and 9.5-7 identify some of the pesticides produced and their uses.[33,34,35]

9.5.10.1 Source Description. The emissions from the various processes are not well quantified. Table 9.5-8 lists some emissions for the production of certain pesticides.[34] No data are given for formulator plants, but since a large amount of pesticides are used as dusts, there may be emissions from these plants also.

Table 9.5-9 lists some control techniques that have been applied to particulate and gas phase pollutants.[34] As can be seen, baghouses, water scrubbers, venturi scrubbers, mist eliminators, and packed columns have been used with a claimed reduction in particulate emissions greater than 90 percent. Actual design data are not available.

9.5.11 Sodium Carbonate (Natural Process)

Sodium carbonate, or soda ash, is produced from natural deposits that

Table 9.5-5. SIZE SPECIFIC EMISSIONS FROM A BORAX FUSING FURNACE

	Mass concentration, mg/DNCM (mass percent less than stated size)							
	Total	15.3 μm	12.9 μm	10.1 μm	7.28 μm	5 μm	2.5 μm	1.01 μm
Uncontrolled	784	600(76.5)	598(76.3)	596(76.1)	593(75.7)	585(74.5)	531(67.7)	248(31.6)
Controlled	24.3	21.5(88.3)	21.1(86.8)	20.6(84.7)	20.1(82.7)	19.8(81.2)	19(78.3)	17.2(70.7)
Efficiency	96.8	96.4	96.5	96.5	96.6	96.6	96.4	93.1

Table 9.5-6. U.S. PRODUCTION OF SYNTHETIC ORGANIC PESTICIDES, BY (USAGE) CATEGORY, IN 1974[34]

Pesticides usage categories	1974 production,[a] 10 Mg
Fungicides	
Pentachlorophenol and sodium salts	23.8
Naphtenic acid, copper salt	0.9
Other cyclic fungicides	31.8
Dithiocarbamic acid salts	16.1
Other acyclic fungicides	1.3
Total fungicides	73.8
Herbicides and plant hormones	
Maleic hydrazide	2.6
2,4-D acid,[b] dimethylamine salt	6.6
Other cyclic compounds	212.0
All acyclic compounds	52.8
Total herbicides and plant hormones	274.0
Insecticides, rodenticides, soil conditioners and fumigants	
Aldrin-toxaphene group	64.3
Methyl parathion	23.3
Other cyclic organophosphorus insecticides	25.6
Methoxychlor	1.5
Other cyclic insecticides and rodenticides	72.8
Methyl bromide	13.8
Acyclic organophosphorus insecticides	35.7
Chloropicrin	2.2
Other acyclic insecticides, rodenticides, soil conditioners, and fumigants	55.8
Total	294.9
Total synthetic organic pesticide production, 1974	642.7

[a]Data may not add to totals due to independent rounding.
[b]2,4-Dichlorophenoxyacetic acid.

Table 9.5-7. PRINCIPAL INORGANIC PESTICIDE FORMULATIONS[35]

Insecticides	Calcium arsenate Calcium cyanide Lead arsenate Sodium cyanide Sodium fluoride
Herbicides	Ammonium sulfamate Arsenic acid Borates Magnesium chlorate Potassium chlorate Sodium arsenite Sodium chlorate
Fungicides	Cadmium chloride Copper carbonate Copper chloride Copper oxide Copper oxychloride sulfate Copper sulfate Mercuric chloride Mercurous chloride Sodium polysulfide Sulfur Zinc oxide Zinc sulfate

Table 9.5-8. SUMMARY OF PRINCIPAL AIR EMISSIONS[25]

Pesticide manufactured	Type of pollutant
Methyl parathion	Sulfur dioxide (gas)
MSMA	Arsenic trioxide (particulate)
Trifluralin	Nitrate (particulate) Sulfate (particulate) Chloride (particulate) Sulfur dioxide (gas) Sulfur trioxide (gas) Hydrogen fluoride (gas) Hydrogen chloride (vapor) Nitrogen oxide (gas)
Pentachlorophenol	Pentachlorophenol (particulate) Sodium pentachlorophenol (particulate) Phenol (vapor)
Captan	Captan (particulate)
DDT	DDT (particulate)
Toxaphene	Hydrogen chloride (vapor)

Table 9.5-9. SUMMARY OF AIR EMISSION CONTROL FOR FIVE MAJOR PESTICIDES[34]

Pesticide	Control device	Emissions controlled	Reported efficiency, %
Methyl parathion[a]	Incinerator	Hydrogen sulfide, sulfur, mercaptan	--[b]
	Water scrubber	Phosphorus pentoxide, hydrogen chloride	95
	Brink[R] mist eliminator	Phosphorus pentoxide (for visibility)	99.9
Toxaphene[c]	Baghouse	Toxaphene	
MSMS[d,e]	Baghouse	Arsenic trioxide	
	Water scrubber	Arsenic trioxide	
	Acidifier vent scrubbers		
Trifluralin[f]	1- and 2-stage venturi scrubber and Tri-mer wet scrubber		90
Pentachlorophenol[g]	Packed and venturi scrubber	Chlorine, phenol, acids	90 to 100
	Baghouse	Pentachlorophenol	95 to 99

[a]Information reported by Monsanto.
[b]Blanks indicate data not available.
[c]Information reported by Hercules.
[d]Information reported by Diamond Shamrock.
[e]Information reported by Ansul.
[f]Information reported by Eli Lilly.
[g]Information reported by Reichhold.

are located in California and Wyoming and via the synthetic Solvay process. Synthetic production has declined sharply since the mid-1960s and only one synthetic plant is currently (August 1979) in operation.[36] Table 9.5-10 shows the location and size of plants that produce sodium carbonate by the natural process.

9.5.11.1 Source Description. Figures 9.5-12, 9.5-13, and 9.5-14 are flowsheets for the three processes used to produce sodium carbonate from brine or ore.[37] The sources of particle emission include ore handling equipment, calciners and dryers, purification steps, and product handling. In the calciners and dryers, small particles are entrained in the hot gases traveling past the ore or product. In the purification steps, particles are entrained in rising vapors through the crude soda ore. There are also emissions from trucks traveling on dusty roads. Calcining and drying are the largest sources of particulate emission. Tables 9.5-11, 9.5-12, and 9.5-13 list emission sources and control techniques for the three processes used.[36]

9.5.11.2 Applicable Control Technologies. Cyclones, wet scrubbers, precipitators, and baghouses can all be used for particulate control. The choice of one device over another would be site dependent. To control emissions from storage piles and conveyer belts, hoods and baghouses must be constructed (see Volume 1, Section 5). When using baghouses, care must be taken to prevent blinding because of the hydroscopic nature of soda ash.[38]

9.5.12 Potash

The potash industry produces three products: (1) muriate of potash (KCl), (2) langbeinite ($K_2SO_4 \cdot 2MgSO_4$), and (3) sulfate of potash (K_2SO_4). Plants where these compounds are produced are described in Table 9.5-14.

9.5.12.1 Source Description. Figures 9.5-15, 9.5-16, and 9.5-17 describe the various processes used to produce potash.[39] Processing steps that emit particulate matter include crushing, screening, conveying, drying, compacting, evaporating, and product storing and loading. These steps are common to all the processes. Table 9.5-15 lists particle sizes for emission from the screening, drying, and compacting steps of muriate production.

9.5.12.2 Emission Characteristics and Applicable Control Technologies. Dryers are the major sources of particulate emissions in the potash industries. Control equipment for dryers includes dry cyclones, wet scrubbers, and cyclones with baghouses. Emission levels of 3 to 5 g/Nm^3 can be achieved

Table 9.5-10. SODIUM CARBONATE NATURAL PROCESSES[36]

Owner	Plant name	Location	Capacity		Process
			10^6 metric tons per year	10^6 short tons per year	
Kerr-McGee	Trona	Trona, CA	1.2	1.3	Direct carbonation
Kerr-McGee	West End	San Bernardino, CA	0.14	0.15	Direct carbonation
Allied Chem.	Trona	Green River, WY	2.0	2.2	Monohydrate
FMC Corp.	Westvaco	Green River, WY	1.14	1.25	Monohydrate
			1.14	1.25	Sesquicarbonate
Stauffer Chem.	Big Island	Green River, WY	1.5	1.65	Monohydrate
Texasgulf, Inc.		Granger, WY	0.9	1.0	Monohydrate

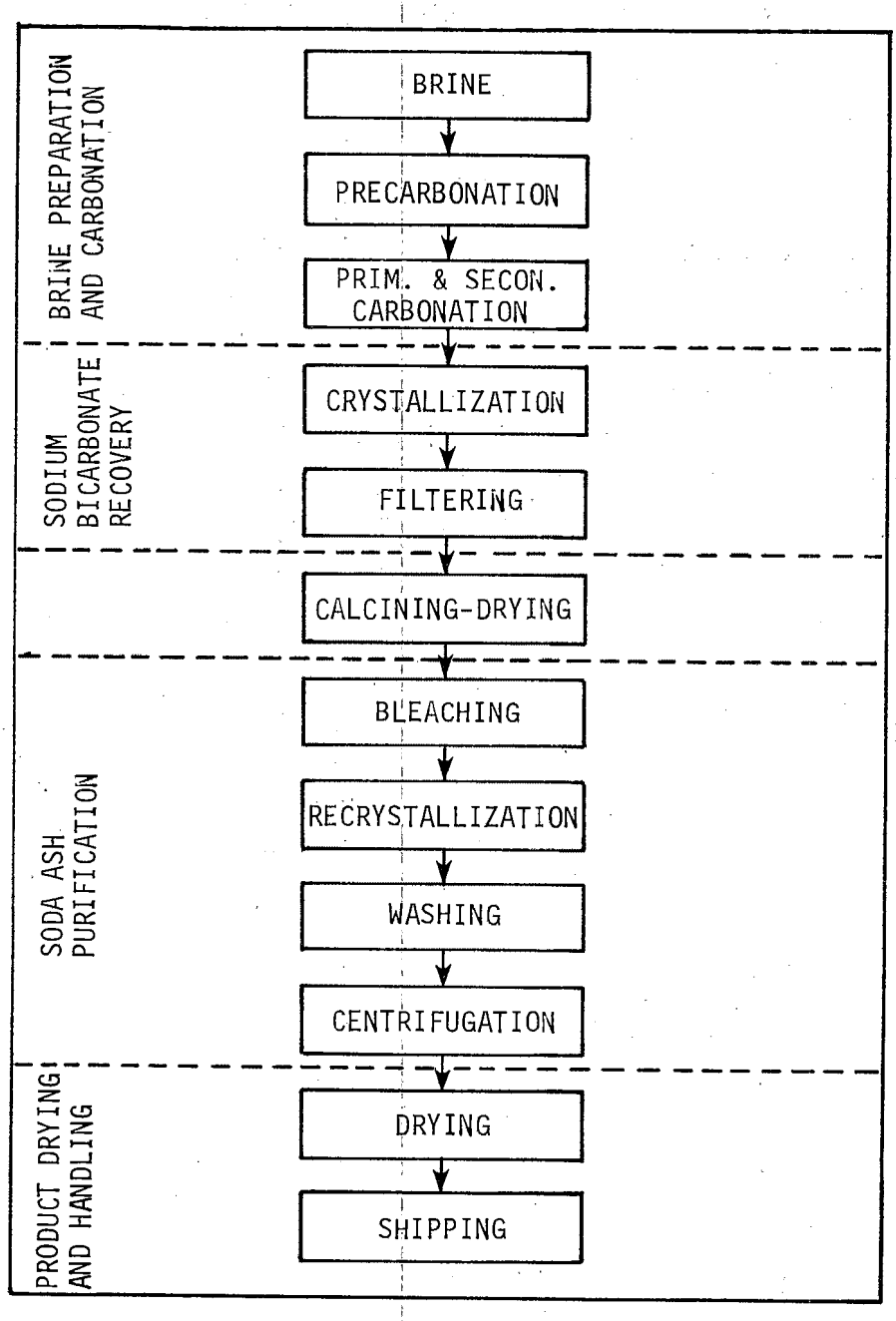

Figure 9.5-12 Direct carbonation process.[37]

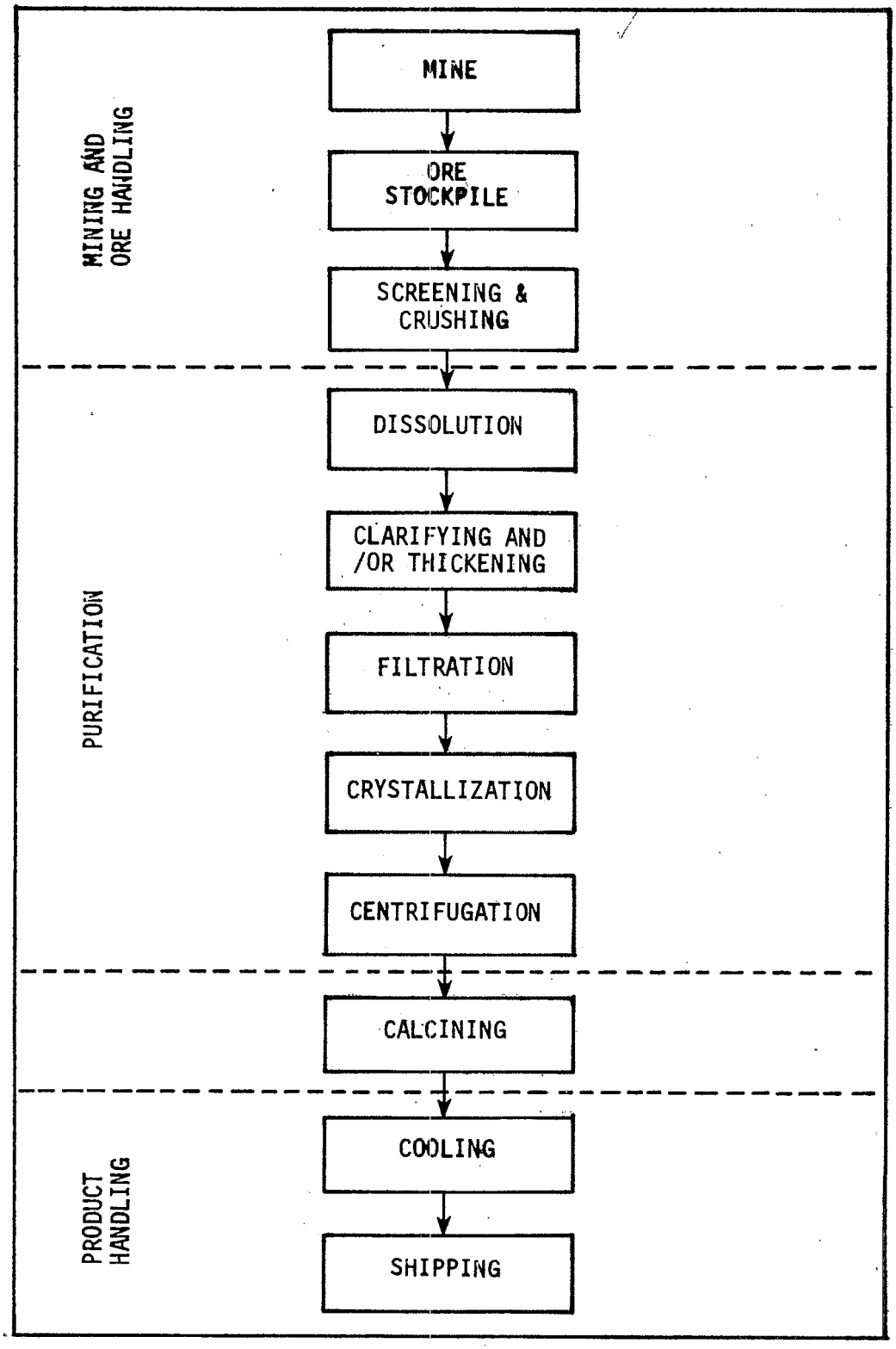

Figure 9.5-13 Sesquicarbonate proccess.[37]

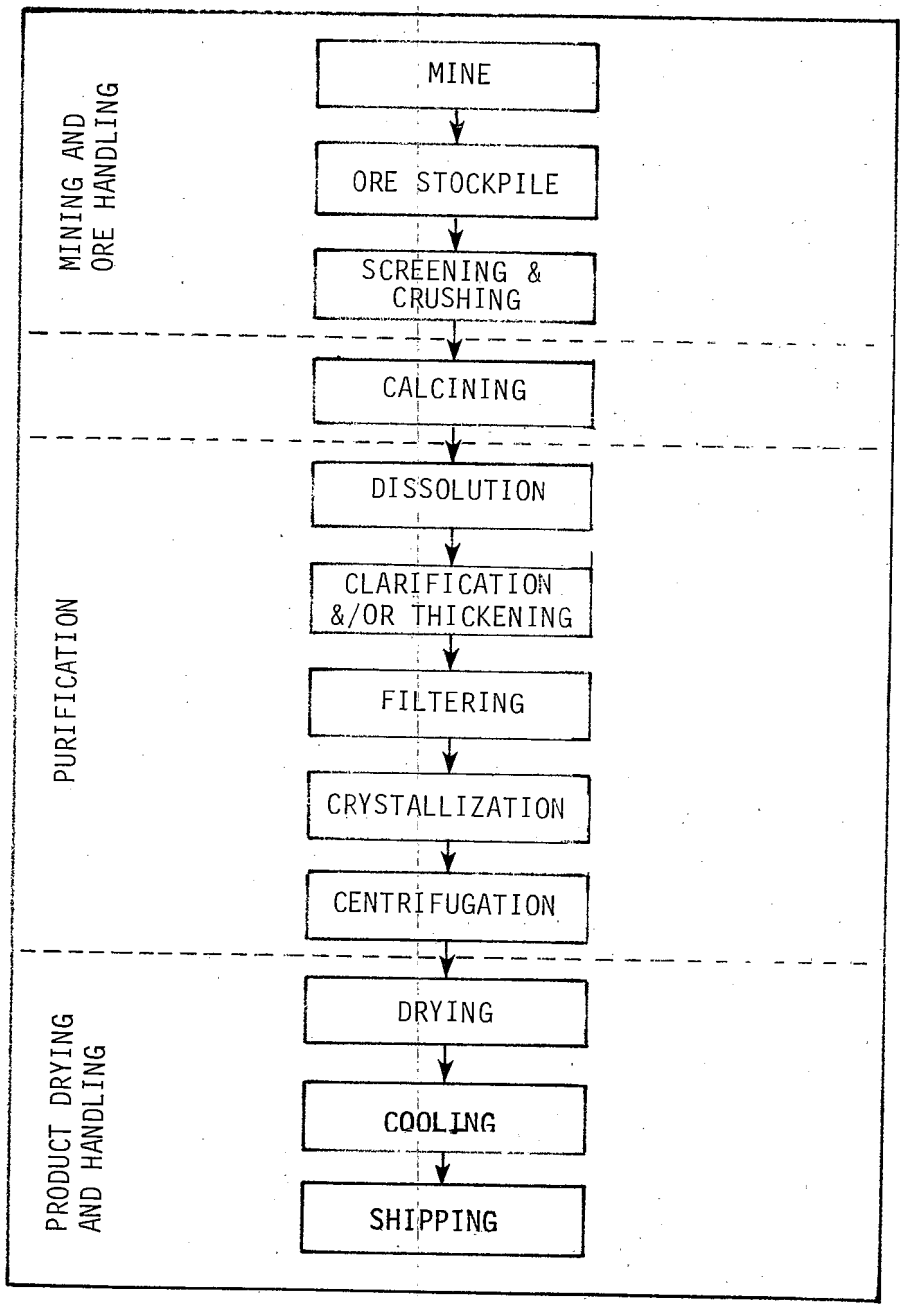

Figure 9.5-14 Monohydrate process.[37]

Table 9.5-11. TYPICAL PARTICULATE EMISSION SOURCES AND CONTROLS FOR A MONOHYDRATE PROCESS PLANT[36]

Process equipment	Control	Average outlet grain loading, g/Nm^3 (dry basis)	kg/Mg
Coal-fired calciner	Cyclone-ESP	0.06	0.11
Dissolver	Venturi scrubber	0.09	-
Rotary steam tube dryer	Venturi scrubber	0.09	0.45

Table 9.5-12. EMISSION SOURCES AND CONTROL EQUIPMENT FOR THE SESQUICARBONATE PROCESS[36]

Process equipment	Control equipment	Outlet grain loading, g/Nm^3 (dry basis)	kg/Mg
Screening and crushing	Bag collector	0.05	-
Rotary steam tube calciner	Wet scrubber	0.06	0.11
Gas-fired calciner	Cyclone-ESP	0.06	0.11
Fluid bed steam tube calcine	Wet scrubber	0.06	0.11
Product storage		0.05	-
Product shipping	Bag collector	0.05	-

TABLE 9.5-13. EMISSION SOURCES AND CONTROL EQUIPMENT FOR THE DIRECT CARBONATION PROCESS[35]

Process equipment	Control equipment	Outlet grain loading, g/Nm^3 (dry basis)	kg/Mg
Gas-oil-fired dryer-calciner	Cyclone and wet scrubber	0.06	0.11
Gas-oil-fired dryer	Wet scrubber	0.09	0.45
Carbonation bleacher	Cyclone-venturi scrubber	0.02	0.03
Product storage	Bag collector	0.05	-
Product shipping	Bag collector	0.05	-

Table 9.5-14. U.S. POTASH PRODUCERS[38]

Company	Location	Parent company	Products	Capacity: Tg K_2O/year	Capacity: 10^3 short tons, K_2O/year
New Mexico					
AMAX Chemical Corporation	Carlsbad	American Metal Climax, Inc.	KCl	410	450
Duval Corporation	Carlsbad	Pennzoil Co., Inc.	$KCl, K_2SO_4, 2MgSO_4, K_2SO_4$	225[a]	250[a]
International Minerals and Chemical Corp.	Carlsbad		$KCl, K_2SO_4, 2MgSO_4, K_2SO_4$	320	350
Kerr-McGee Chemical Corp.	Bobbs		KCl	320	350
Mississippi Chemical Corp	Carlsbad		KCl	165	180
National Potash Co.	Carlsbad	Freeport Minerals Co.	KCl	210	230
Potash Co. of America	Carlsbad	Ideal Basic Industries, Inc	KCL	480	530
Utah					
Great Salt Lake Minerals and Chemical Corp.	Ogden	Gulf Resources and Chemicals Corp.	K_2SO_4	110	120
Kaiser Alum. & Chemical Corp.	Wendover	Kaiser Industries Corp.	KCl	55	60
Texas Gulf, Inc.	Moab		KCl	165	180
California					
Kerr-McGee Chemical Corp.	Searles Lake		KCL, K_2SO_4	180	200

[a]K_2SO_4 production was terminated in late 1977, KCl production to be terminated in 1978 $K_2SO_4MgSO_4$ product to be expanded to 100 Tg per year (110,000 short tons per year).

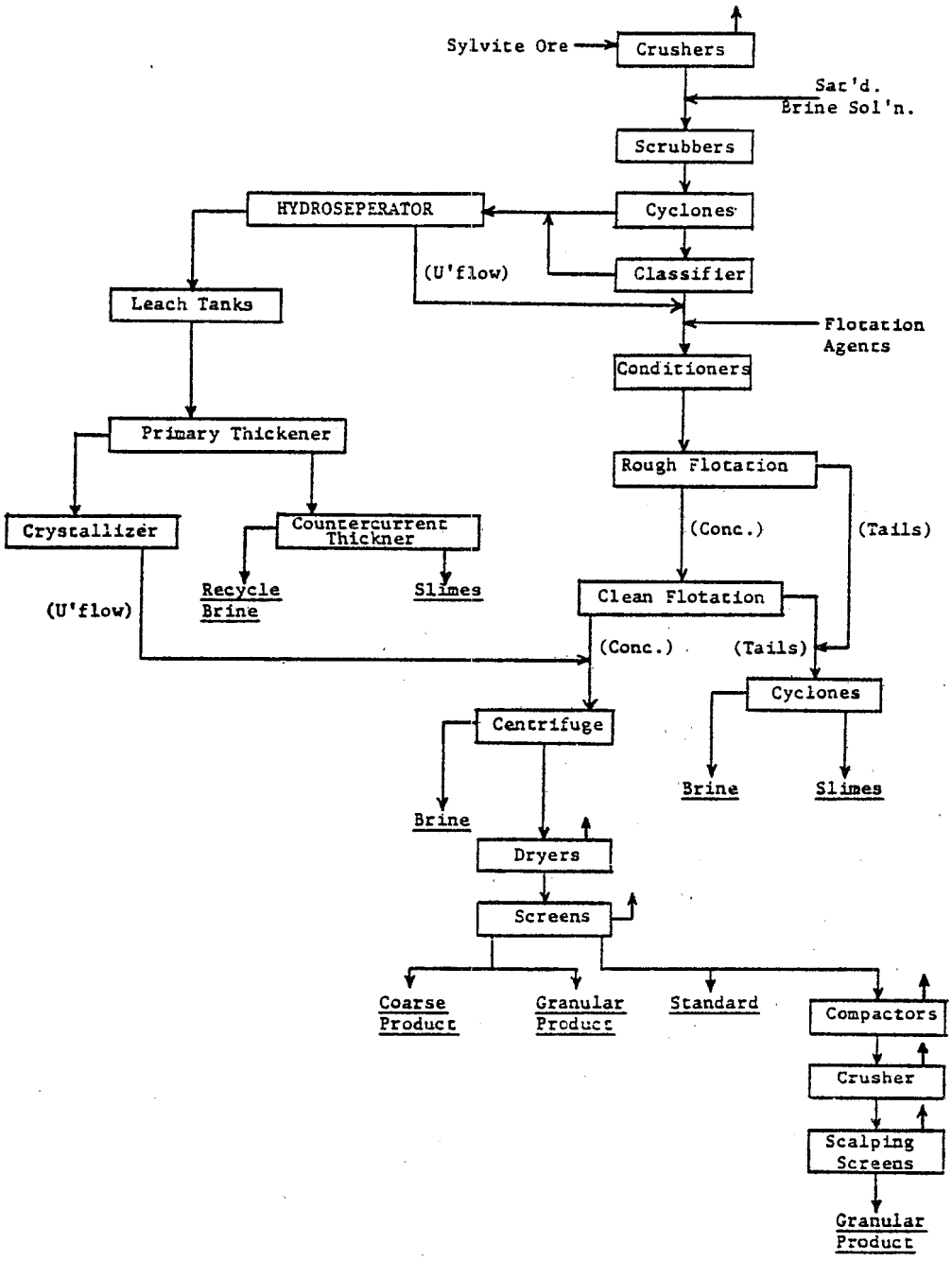

Figure 9.5-15 Simplified flow sheet for production of muriate of potash from sylvite ore.[39] (Estimated emission points - specific points not identified in ref. 39.)

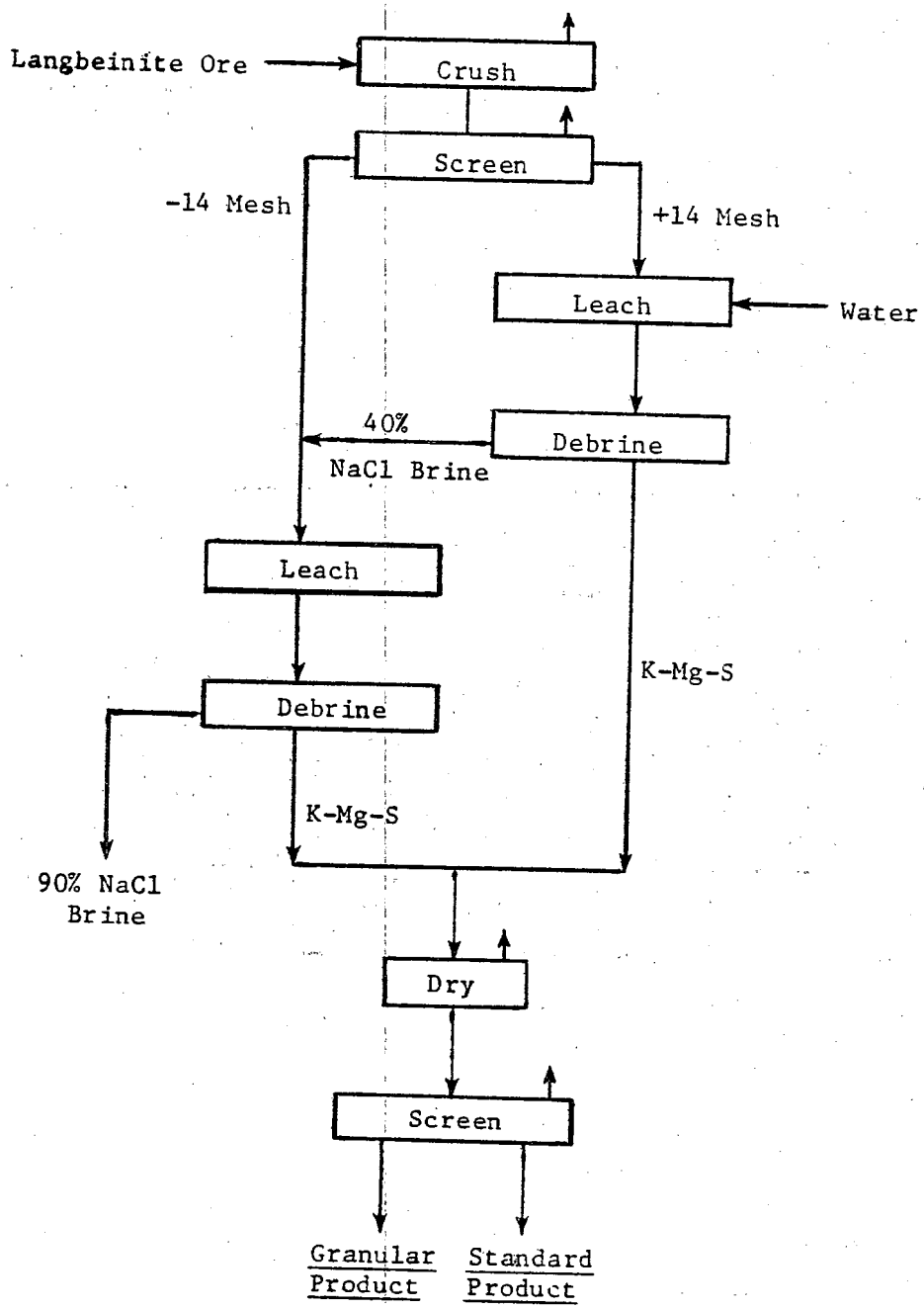

Figure 9.5-16 Simplified flow diagram for production of langbeinite, (K-Mg-S).[38] (Estimated emission points - specific points not identified in ref. 38.)

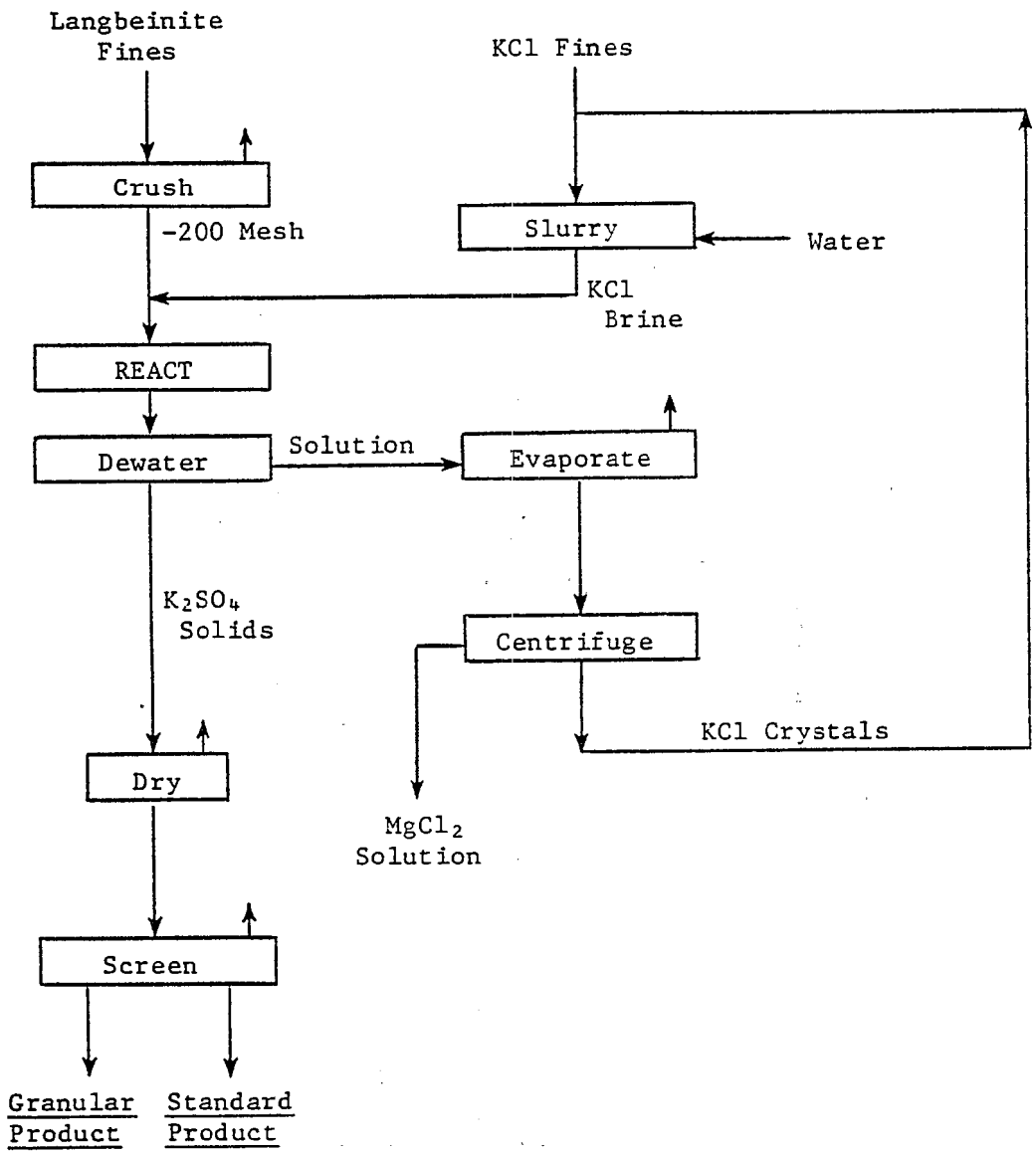

Figure 9.5-17 Simplified flow diagram for production of sulfate of potash.[38] (Estimated emission points - specific points not identified in ref.38.)

Table 9.5-15. PARTICLE SIZE DISTRIBUTION DURING MURIATE PRODUCTION[38]

Emission source	Particle size, micrometers	Percent particles coarser than (by weight)
Screening section	20.0	2
	10.0	9
	5.0	26
	2.0	60
	1.0	83
Dryer	20.0	7 to 2
	10.0	23 to 7
	5.0	50 to 15
	2.0	83 to 35
	1.0	95 to 54
Compactor	20.0	7 to 1
	10.0	20 to 5.5
	5.0	42 to 12
	2.0	73 to 41
	1.0	89 to 64

using dry cyclones, which are the most commonly used control technique. Wet scrubbers can reduce the emission level to 0.4 g/Nm^3 with a pressure drop of 2 to 5 kPa; however, there is a potential water disposal problem, especially if the plant is under zero discharge constraints. In some cases the water can be recycled to the crystallizer.[39]

Table 9.5-16 is a summary, by particle size, of data from an emissions test of a potash dryer and a salt dryer. The control device for the potash dryer was a multivane scrubber operating at 0.78 kPa pressure differential. The control device for the salt dryer was a wetted fiber scrubber.

Since KCl is quite hydroscopic and could cause caking, baghouses on dryers are in limited use. They have been used, however, on a sulfate of potash dryer because sulfate is much less hydroscopic than chloride.[39]

Using steam-tube dryers instead of direct-fired dryers could reduce the total gas flow and particulate emissions.[39]

The flue gas from submerged combustion evaporators contains 50 to 60 percent moisture and high loadings of particulate matter which make this stream difficult to clean. Also, in one test, it was found that 85 percent of the particles are less than one micron in diameter. At present, no controls are being used in the U.S.[39]

Wet scrubbers with pressure drops of 1.5 to 2.5 kPa, venturi scrubbers, or tray towers are used to control emissions from compactors. When baghouses are used, caking can become a problem. Removal efficiencies with these controls can be greater than 99 percent. A dry cyclone with a control efficiency of 90 to 98 percent is another possible control device for compactors. These control efficiencies are based on actual measurements but Reference 39 does not list the particulate loading.[39]

For bagging and loading operations, a cyclone with control efficiencies of 90 to 97 percent can be used. Some type of shed or hood arrangement with a fan is required. A wet scrubber could be used for higher control efficiencies.[39] (See Volume 1, Section 5 for more details.)

Table 9.5-16. SIZE SPECIFIC EMISSIONS FROM POTASH AND SALT DRYERS[12]

		Mass concentration, mg/DMCM (mass percent less than stated size)							
		Total	15.3 μm	12.9 μm	10.1 μm	7.28 μm	5 μm	2.5 μm	1.01 μm
Potash dryer[a]	Uncontrolled	802	499(62.2)	493(61.4)	466(58.0)	412(51.3)	298(37.2)	153(19.1)	75.1(9.4)
	Controlled	233	201(86.3)	198(84.9)	190(81.7)	175(74.9)	155(66.5)	107(46.0)	48.8(20.9)
	Efficiency	70.9	59.7	59.8	59.2	57.5	48.0	30.1	34.7
Salt dryer[b]	Uncontrolled	3.0	1.93(64.3)	1.90(63.2)	1.81(60.1)	1.60(53.4)	1.29(43.0)	0.64(21.2)	0.16(5.5)
	Controlled	0.24	0.22(90.2)	0.22(90.1)	0.22(90.0)	0.22(89.6)	0.22(89.0)	0.20(82.2)	0.15(60.6)
	Efficiency	92	88.6	88.4	87.8	86.3	82.9	68.8	6.3

[a]FPEIS test series number is 49.
[b]FPEIS test series number is 52.

REFERENCES FOR SECTION 9.5

1. OAQPS Data File of Nationwide Emissions. U.S. Environmental Protection Agency, Office of Air Quality Planning and Standards, Research Triangle Park, NC. February 1979.

2. Shreve, R. N. Chemical Process Industries, 3rd edition. McGraw-Hill Book Company. New York, NY. 1967

3. Moscowitz, C. M. Source Assessment: Charcoal Manufacturing - State of the Art. U.S. Environmental Protection Agency. Publication No. EPA-600/2-78-042. December 1978.

4. Hulman, P. B. Screening Study on Feasibility of Standards of Performance for Wood Charcoal Manufacturing. Radian Corporation. Austin, TX. Publication No. 78-200-187-32-06. August 1978.

5. Source Assessment - Carbon Black Manufacture. U.S. Environmental Protection Agency. Publication No. EPA-600/2-77-107k. October 1977.

6. Schwartz, W. A., et al. Engineering and Cost Study of Air Pollution Control for the Petrochemical Industry - Volume I: Carbon Black Manufacture by the Furnace Process. U.S. Environmental Protection Agency. Publication No. EPA-450/3-73-006a. June 1974.

7. Drabkin, M., and K. J. Brooks. Review of Standards of Performance for New Stationary Sorces - Sulfuric Acid Plants. U.S. Environmental Protection Agency. Publication No. EPA-450/3-79-003. January 1979.

8. Gerstle, R. W., et al. Industrial Process Profiles for Environmental Use, Chapter 4, Carbon Black Industry. U.S. Environmental Protection Agency. Publication No. EPA-600/2-77-023d. February 1977.

9. Draft SSEIS Report on Carbon Black. U.S. Environmental Protection Agency, Emissions Standards and Engineering Division. Research Triangle Park, NC. April 1976.

10. Danielson, J. A. Air Pollution Engineering Manual. U.S. Environmental Protection Agency. Publication No. AP-40. May 1973.

11. Sittig, M. S. Particulates and Fine Dust Removal. Noyes Data Corporation. Park Ridge, NJ. 1977.

12. Source Category Survey: Detergent Industry. U.S. Environmental Protection Agency. Publication No. EPA-450/3-80-030. June 1980.

13. Ibid.

14. Trip report on Procter and Gamble detergent plant. U.S. Environmental Protection Agency, Office of Air Quality Planning and Standards, Standards Documentation Section. Research Triangle Park, NC. File AID 8-1-24. April 1980.

15. Hudak, C. E., and T. B. Parsons. Industrial Process Profiles for Environmental Use, Chapter 12, The Explosives Industry. U.S. Environmental Protection Agency. Publication No. EPA-600/2-77-023c. February 1977.

16. Compilation of Air Pollution Emission Factors, 2nd edition. U.S. Environmental Protection Agency. Publication No. AP-42. April 1973.

17. Nelson, T. P., and R. E. Pyle. Screening Study to Determine the Need for New Source Performance Standards in the Explosives Manufacturing Industry. Radian Corporation. Austin, TX. July 1976.

18. Happel, J., and M. A. Hantow. Feasibility Study of a Process to Treat Flue Gas from Red Water Incinerators. Pictinny Arsenal. Contract No. DAAA-2I-74-C-0537. February 1976.

19. Atmospheric Emissions from Thermal-Process Phosphoric Acid Manufacture. U.S. Public Health Service. National Air Pollution Control Administration. Publication No. AP-48. October 1968.

20. Source Category Survey: Thermal Process Phosphoric Acid Manufacturing Industry. U.S. Environmental Protection Agency. Publication No. EPA-450-3-80-018. May 1980.

21. Bury, J. I., et al. Potential Abatement, Production and Marketing of Byproduct Sulfuric Acid In The U.S. U.S. Environmental Protection Agency. Publication No. EPA-600/7-78-070. April 1978. pp 17-18.

22. Gerstle, R. W., et al. Industrial Process Profiles for Environmental Use, Chapter 23: Sulfur, Sulfur Oxides, and Sulfuric Acid. U.S. Environmental Protection Agency. Publication No. EPA-600/2-77-023w. February 1977.

23. Final Guideline Document: Control of Sulfuric Acid Mist Emissions from Existing Sulfuric Acid Production Units. U.S. Environmental Protection Agency. Publication No. EPA-450/2-77-019. September 1977.

24. Compilation of Air Pollutant Emission Factors. U.S. Environmental Protection Agency, Office of Air Quality Planning and Standards. Research Triangle Park, NC. Publication No. AP-42, Supplement A. July 1979.

25. Serth, R. W., and T. W. Hughes. Source Assessment: Phthalic Anhydride (Air Emissions). U.S. Environmental Protection Agency. Publication No. EPA-600/2-76-032d. December 1976.

26. Schwartz, W. A., et al. Engineering and Cost Study of Air Pollution Control for the Petrochemical Industry - Volume 7: Phthalic Anhydride Manufacture from Ortho-Xylene. U.S. Environmental Protection Agency. Publication No. EPA-450/3-73-006g. July 1975.

27. Boscak, V. Screening Study on Feasibility of Standards of Performance for Hydrofluoric Acid Manufacture. U.S. Environmental Protection Agency. Publication No. EPA-450/3-78-109. October 1978.

28. Lowenheim, F. A., and M. K. Moran. Faith, Keyes, and Clark's Industrial Chemicals, 4th edition. Wiley-Interscience Publication. New York, NY. 1975. U.S. Environmental Protection Agency. Publication No. EPA-450/3-78-109.

29. Muehlberg, P.E., et al. Industrial Process Profiles for Environmental Use, Chapter 15: Brine and Evaporite Chemicals Industry. U.S. Environmental Protection Agency. Publication No. EPA-600/2-77-023o. February 1977.

30. Davis, W. E. National Inventory of Sources and Emissions: Boron-1969. U.S. Environmental Protection Agency. Publication No. APTD-1159. June 1972.

31. Lemon, E. D. Wet Scrubbing Experience with Fine Borax Dust. Journal of the Air Pollution Control Association. Pittsburg, PA. 27:(1080), 1977.

32. Calvert, S. American Air Filter Kinpactor 10 X 56 Venturi: Scrubber Evaluation. U.S. Environmental Protection Agency. Publication No. EPA-600/2-77-209b. November 1977.

33. Kelso, G. L., et al. Development of Information on Pesticides Manufacturing for Source Assessment. U.S. Environmental Protection Agency. Publication No. EPA-600/2-78-100. May 1978.

34. Archer, S. R. Source Assessment: Pesticide Manufacturing Air Emissions - Overview and Prioritization. U.S. Environmental Protection Agency. Publication No. EPA-600/2-78-004d. March 1978.

35. Patterson, J. W. State-of-the Art for the Inorganic Chemicals Industry: Inorganic Pesticides. U.S. Environmental Protection Agency. Publication No. EPA-600/2-74-009a. March 1975.

36. Blythe, G. M. Screening Study to Determine Need for Standards of Performance for the Sodium Carbonate Industry. Radian Corporation. Austin, TX. Publication No. DCN 78-200-187-34-08. October 13, 1978.

37. Sodium Carbonate Industry - Background Information for Proposed Standards. U.S. Environmental Protection Agency. Publication No. EPA-450/3-80-029a. August 1980.

38. Blythe, G. M., and K. N. Trade. Final Report - Screening Study to Determine Need for Standards of Performance for the Potash Industry. Radian Corporation. Austin, TX. Publication No. DCN 78-200-187-35-08. October 13, 1978.

39. Wilson, D. B. An Engineering Analysis of Particulate Recovery from Selected Potash Refining Operations. New Mexico State University, Department of Chemical Engineering. Las Cruces, NM. November 1977.

9.6 FOOD AND AGRICULTURAL INDUSTRY

The production of agricultural fertilizers and the processing of food and feed from agricultural crops are activities which, for purposes of this discussion, are categorized as the Food and Agricultural Industry. Food and feed products undergo a number of processing steps, such as refinement, preservation, and product improvement, as well as storage, transfer, packaging, and shipping before being used by the consumer. Particulate emissions from these processes usually consist of agricultural waste materials, grain dust, seeds, hulls, and dirt. Production processes, emissions characteristics, and particulate matter abatement technologies are presented for those fertilizer, food, and feed industries that have the potential to contribute significant quantities of particulate emissions to the atmosphere. These industries include ammonium nitrate, ammonium sulfate, urea, and diammonium phosphate fertilizer production, as well as grain handling, grain processing, alfalfa dehydration, cotton ginning, and starch and vegetable oil manufacturing.

9.6.1 Ammonium Nitrate Fertilizer

Ammonium nitrate, an important source of nitrogen in fertilizers, is also used for a variety of nonagricultural purposes, including the production of nitrous oxide and as a component in certain explosives. In the United States there are 63 ammonium nitrate plants, located primarily in the Central and Southeastern States. In 1979, these plants produced 7.0 Tg of ammonium nitrate.[1] Pollutants emitted during ammonium nitrate production include ammonia and nitric acid mist and solid ammonium nitrate. The solid particles are typically either greater than 1 millimeter or less than 3 micrometers in size.[2] Ammonium nitrate is water soluble; therefore, particulate emissions can become a water pollution problem on rainy days.

9.6.1.1 Process Description. Ammonium nitrate is formed from the reaction of ammonia with nitric acid in a vessel called a neutralizer. This ammonium nitrate solution is then concentrated to a 95+ percent solution (ammonium nitrate in water) in an evaporator to form a melt. The ammonium nitrate thus formed is either marketed as a solution or solidified from the melt by graining, granulation, or prilling (pelletizing). Among these processes, prilling is the most commonly used and the largest source of particulate emissions, principally because all granulators in use are

controlled to reduce process losses. Prills are formed when the hot melt is sprayed through orifices at the top of the prilling tower and falls counter current to a flow of cooling air. Solid ammonium nitrate may be cooled, dried, and coated (to improve shelf life) before being bagged and stored.

Main emission points in the solution part of this process are the neutralizer and the atmospheric vents on the evaporator which emit ammonium nitrate particles. Fugitive particulate emissions are produced during solid product screening, coating, bagging, and bulk loading. A flow diagram indicating major emissions points is given in Figure 9.6-1.

9.6.1.2 Emissions and Controls. In 1977, nationwide particulate emissions from the manufacture of ammonium nitrate amounted to 7.4 Gg.[3] Process steps responsible for these emissions are as follows: (1) neutralization; (2) evaporation and concentration; (3) solids formation; (4) product finishing; and (5) product screening, coating, bagging and bulk loading.[4]

9.6.1.2.1 Neutralization. The neutralization reaction is exothermic and produces steam that may contain particulates, ammonia, and/or nitric acid. During normal plant operations, emissions can be eliminated by total condensation. However, even with total condensation it is necessary to vent steam during startup, shutdown, or upset conditions. Uncontrolled particulate emissions for conventional neutralizers usually fall in the range of 0.25 to 3.7 kg/Mg of 100% ammonium nitrate.[2,4,5] Average emission rates after control, as shown in Table 9.6-1, range from 0.14 to 0.5kg/Mg. Mississippi Chemical Corporation neutralizer emissions typically range from 0.07 to 0.5 kg/Mg.[2,4]

9.6.1.2.2 Evaporator/concentrator. Approximately 75 percent of the industry utilizes film-type evaporators to concentrate the ammonium nitrate to the levels required for subsequent prilling or granulation. Ammonium nitrate particulate emissions in the vapor streams off the evaporators generally fall in the range of 0.3 to 1.0 kg/Mg of ammonium nitrate.[4,5] About 70 percent of particulate emissions from the neutralizer, evaporator/concentrator, and prill tower are less than 3 m in size.[2] Emissions from the evaporator/concentrator are commonly controlled by a scrubber. In a few plants, the neutralizer and the evaporator/concentrator are ducted to a mist eliminator.

9.6.1.2.3 Solid formation. Approximately 60 percent of the ammonium nitrate produced in the United States is sold as a solid product. Eighty

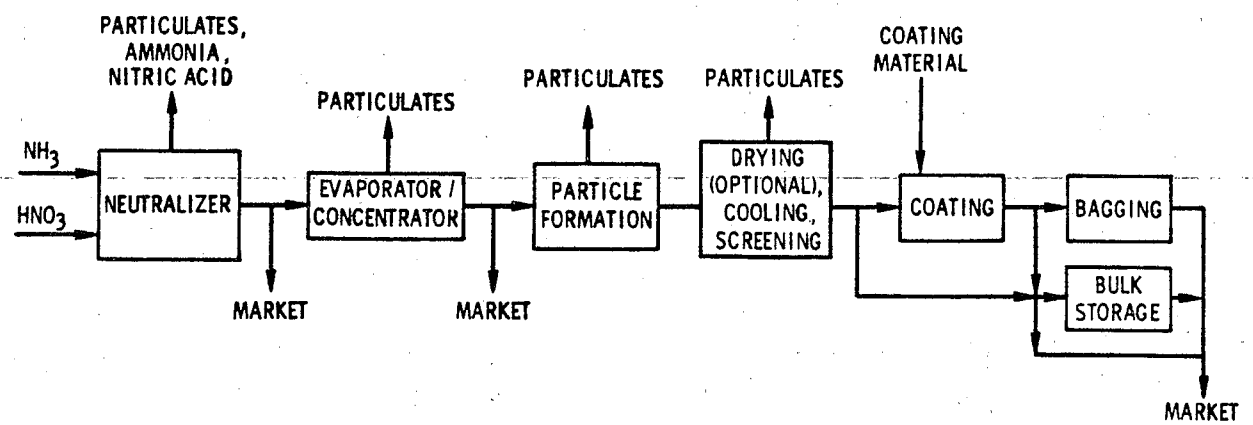

Figure 9.6-1 Flow diagram of ammonium nitrate production.[1]

Table 9.6-1. SUMMARY OF NEUTRALIZATION EMISSION DATA[4,5]

Emission control method	Particulate emissions	
	g/m^3	kg/Mg[a] of product
Mist eliminator	0.50	0.42
Partial condensation	1.23	0.50
Mississippi Chemical Corporation neutralizer	0.36	0.17
Venturi scrubber	2.40	0.14

[a]Grams per wet standard cubic meter.

percent of the solid ammonium nitrate is produced by prilling and 10 percent by granulation; the remaining 10 percent is manufactured by other methods.

Prill Towers--The prilling process, which involves prills falling through a counter-current airstream, is highly conducive to particulate entrainment. The particulates in the submicrometer range, referred to as "fumes," result from the evaporation and subsequent condensation and solidification of the material being prilled; they are particularly difficult to control. The amount of fumes produced is temperature dependent; to minimize fume formation, melt temperature should be kept as low as possible and melt composition carefully controlled.

Approximately 70 percent of the low density ammonium nitrate prill towers operate without emissions control equipment; 14 percent use a collection cone in combination with a mist eliminator; 7 percent use wet scrubbers; and the remainder use mesh pads or similar devices. Most high density prill towers are controlled, with about 60% utilizing a mist eliminator/collection cone system, and 18% using wet scrubbers. Tests for uncontrolled ammonium nitrate prill towers indicate an emission rate of 0.81 to 2.7 kg/Mg for high density prills and 0.21 to 0.69 kg/Mg for low density prills.[1] The combined cone/mist eliminator collection system appears to reduce emissions to below 20 percent opacity.

Industry-supplied test data for six different high density prill towers with cone/mist eliminators indicate a controlled emission rate range of 0.03 to 0.51 kg/Mg.[1] (In this case, the controlled emission rate refers to the sum of the emissions from the mist eliminators and the by-pass stream from the prill tower. Uncontrolled particulate emissions from three different granulators range from 138 to 152 kg/Mg.[1]) Test data for two low density prill towers with cone/mist eliminators indicate a controlled emission rate of 0.06 and 0.24 kg/Mg.[1]

The performance of wet scrubbers is especially sensitive to the particulate size distribution, which, for a typical prill tower, is as follows:

- 30 percent by weight: $> 3\ \mu m$
- 20 percent by weight: 1 to 3 μm
- 35 percent by weight: 0.5 to 1 μm
- 15 percent by weight: $< 0.5\ \mu m$

The large fraction below 1.0 μm creates a difficult control problem and a high opacity even at low concentrations. A low-energy scrubber reduces emissions to 0.625 kg/Mg at a concentration of 0.098 g/m^3.[4]

Granulator--Because of the limited use of drum granulators in the ammonium nitrate industry, less data are available regarding emissions from this source. Tests on two plants indicate an emission range of 0.22 to 0.61 kg/Mg of ammonium nitrate produced for a granulator equipped with a scrubber.[1] Due to the relatively high uncontrolled emission rates from granulators, a scrubber is considered to be an integral part of the process.

Product Finishing--Drying removes water from solids that have been formed with a high moisture content melt. Typically, this step is performed by two rotary drum dryers in series. Cooling is usually accomplished in another rotary drum, although fluidized bed coolers are beginning to gain some acceptance. It is common practice to use a coating and/or an additive to enhance prill shelf life and to suppress dust emissions from solid ammonium nitrate particles. Additives include magnesium oxide, calcium oxide, and magnesium nitrate.

Uncontrolled emissions from dryers and coolers are reported to range from 1 to 38 kg/Mg of product, but are readily reduced by scrubbers.[1] Emissions from coating operations are fugitive emissions. Based on the estimate of 10 percent loss of coating material during coating operations, there is an emission of 3 kg/Mg of ammonium nitrate (for a coating level of 3 percent). Most of the material actually settles to the floor and only a small percentage escapes to the atmosphere.

Predryers, dryers, and coolers are usually very similar, except that warm air is used for predryers/dryers and cold air is used for coolers. Wet scrubbers are practically the only type of equipment used to control emissions from these sources. Emission rates for low energy scrubbers controlling predryers, dryers, and coolers range from 0.02 to 0.65 g/kg of product.[1,4]

Product size is controlled primarily by screening. Oversize and undersize material is removed from the product solids and recycled. Only a small quantity of particulates escape as fugitive emissions from the building in

which screening is performed.

One source of emissions of airborn fines is the series of transfer points (often by conveyor belt) in the process. The severity of this emission source will depend on the characteristics of the material.

Approximately 90 percent of all ammonium nitrate solids are handled in bulk. Because of the small quantities of fines present in the ammonium nitrate solid, particulate entrainment is low in these operations. One estimate is that less than 0.1 kg of particulates per megagram of ammonium nitrate product is entrained in bulk handling.[4]

9.6.1.3 Environmental Impact. The extensive use of wet scrubbers to reduce particulate emissions in the ammonium nitrate industry may create wastewater problems. The wastewater can be treated with lime; however, such treatment results in a solid waste disposal problem.[2,6] Caustic scrubbers produce sodium nitrate, which also creates disposal problems.[7]

9.6.2 Ammonium Sulfate Fertilizer

Ammonium sulfate, although used primarily as a fertilizer, is also used in water treatment, pharmaceuticals, fermentation, food processing, fireproofing, and tanning. It can be manufactured from the neutralization reaction between sulfuric acid and ammonia, similar to the way in which ammonium nitrate is produced. However, most ammonium sulfate is obtained as a by-product from other processes. Total production of ammonium sulfate in 1977 was 2.2 Tg, 51 percent of which was manufactured as a by-product of caprolactam production, 21 percent by the synthetic process, and 20 percent as a by-product of coke manufacture.[8] The balance of ammonium sulfate (AS) is produced as by-products from miscellaneous production processes.

9.6.2.1 Process Description. A generalized flow diagram for the three major AS manufacturing processes is shown in Figure 9.6-2. Although the processes differ in the manner of AS crystal production, the subsequent operations of crystal dewatering and drying followed by screening are quite similar for these processes.

9.6.2.2 Emissions and Controls. In 1977, nationwide particulate emissions from the manufacture of ammonium sulfate amounted to 17.2 Gg.[3] The primary process emission point is the ammonium sulfate dryer.[9] Only rotary dryers are reported to be used in the synthetic manufacturing plants while

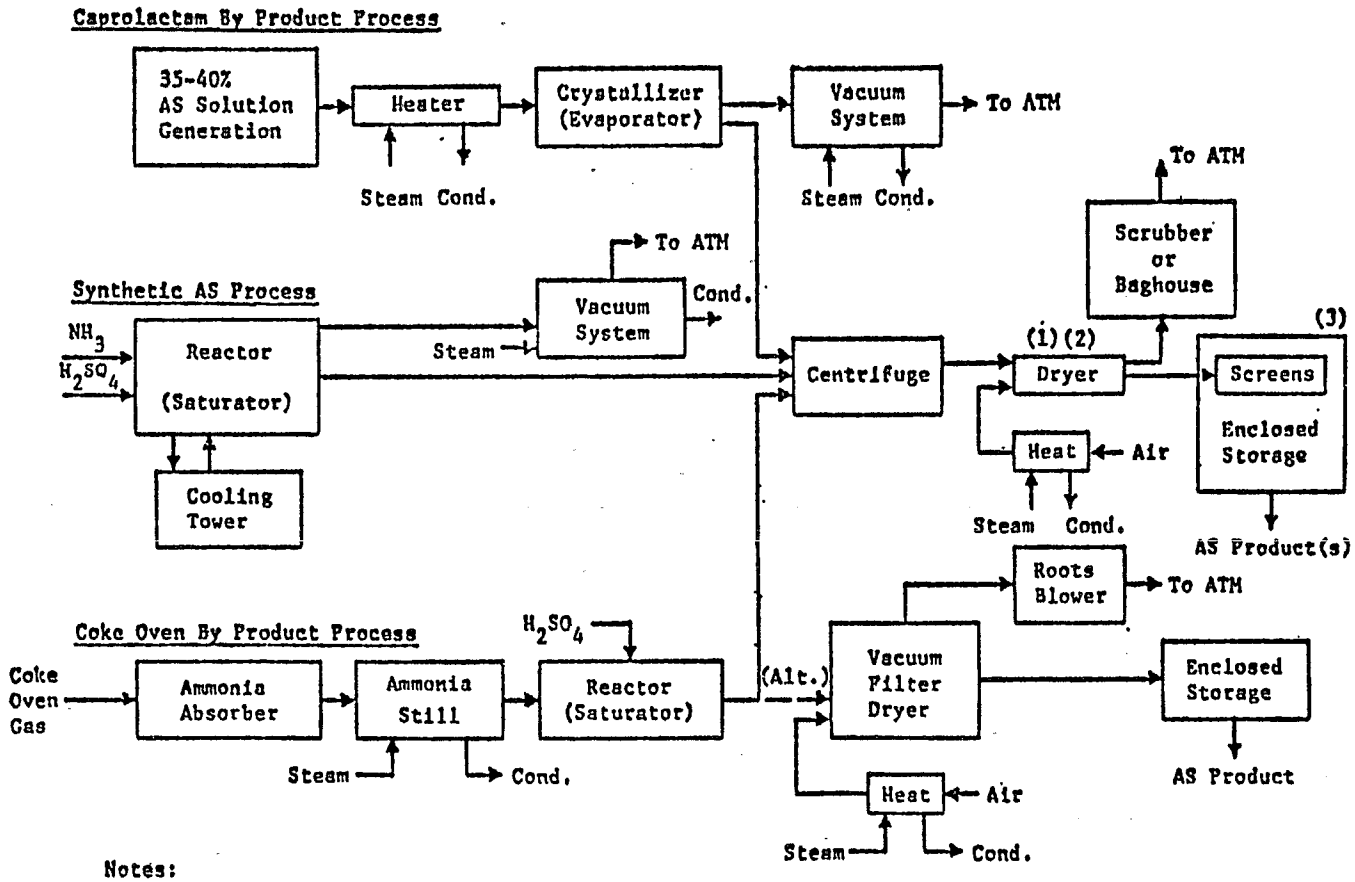

Notes:

1. Dryer may be rotary or fluidized bed type
2. Coke oven plants may integrate centrifuging and drying or centrifuge only
3. Coke oven plant product not screened

Figure 9.6-2 Flow diagram for ammonium sulfate processes.[9]

caprolactam by-product plants utilize fluidized bed or rotary dryers.[9] In coke oven gas by-product plants, dewatering drying is accomplished by using rotary vacuum filters, combination centrifuge-dryers, or by centrifuges followed by a rotary dryer.[9]

Industrial process fugitive emissions from materials handling or product screening were not found to be major emission sources in a recent study and, for that reason, control technology for these sources is not discussed herein.[9]

Particle size distribution test data of uncontrolled particulate emissions for several dryers are presented in Figure 9.6-3. The particle size distribution for the one fluidized bed dryer which was sampled indicates a larger percentage (greater than 99.9+ percent) of particles greater than 1 micrometer in diameter than the rotary dryer test results, which ranged from 93 to 99.9 percent.[9]

The uncontrolled emission rate for one fluidized bed dryer was measured at 111 kg/Mg, compared to an average of 23 kg/Mg (ranging from 0.4 to 77 kg/Mg) for 3 rotary dryers. This finding may be a consideration in controlling emissions since fluidized bed dryers would generally appear to require more efficient control in order to comply with applicable air pollution regulations.[9]

The AS salt exhibits a moderately high solubility in water and, consequently, wet scrubbing has frequently been used to control dryer emissions.[9] Organic impurities may contaminate the AS: caprolactam at caprolactam by-product plants and tars at coke oven by-product plants account for these impurities. Wet scrubbing has an advantage compared to baghouse control at a caprolactam plant because test data have indicated up to 85 percent collection of caprolactam vapor emissions from the AS dryer.[9]

Venturi, centrifugal, spray-type, and packed tower designs of scrubbers have been used in the industry. The only fabric filter baghouse in use is located at a synthetic AS plant. Coke oven facilities employ cyclones, scrubbers, or no emission control systems.

Five particulate control systems have been tested in a study of the AS industry. The results of these tests are summarized in Table 9.6-2. The baghouse and wet scrubbers with pressure drops in the 2.5 to 3.2 kPa range

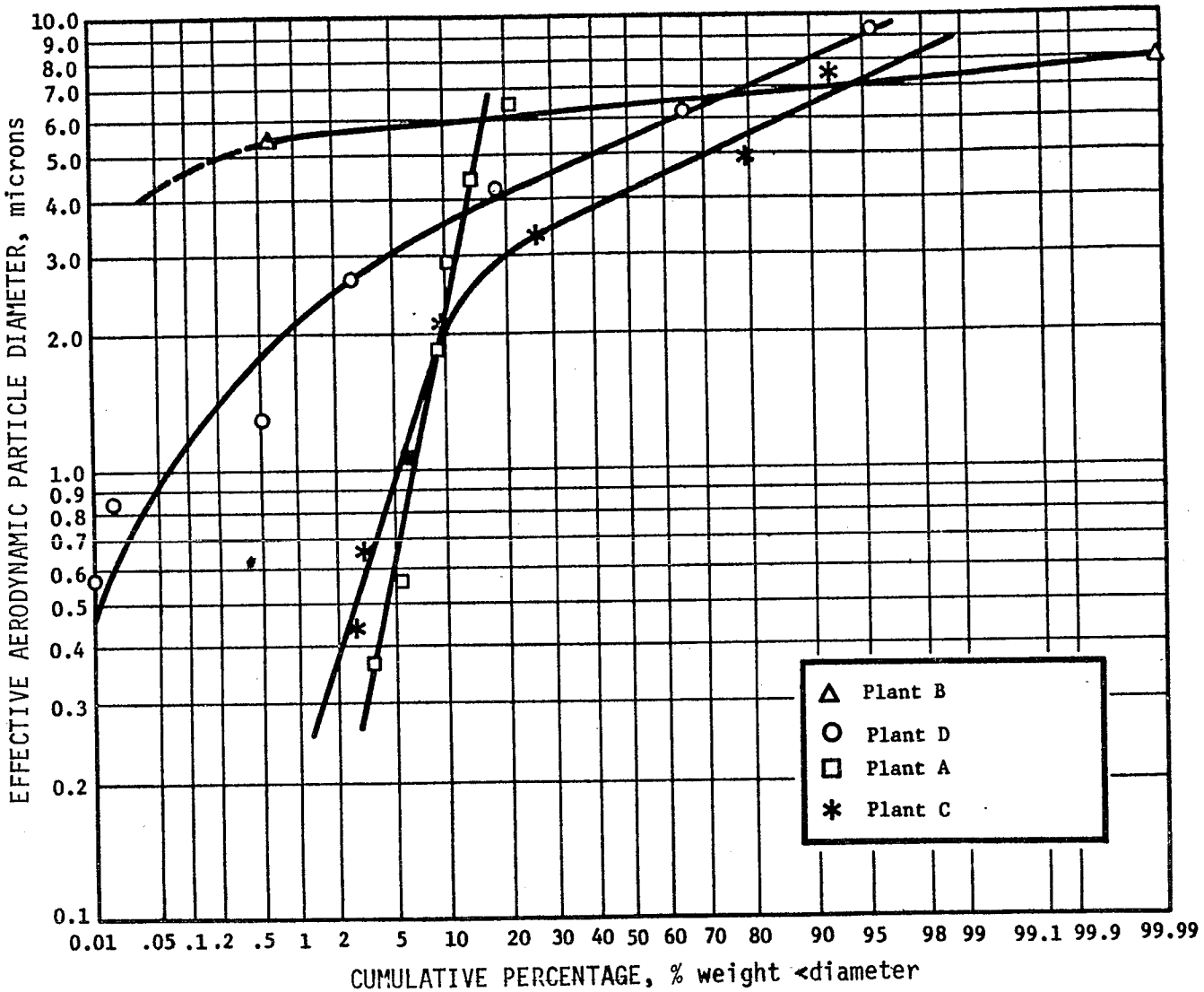

Figure 9.6-3 Uncontrolled ammonium sulfate dryer emissions - particle size distribution.[9]

Table 9.6-2. EMISSION TEST RESULTS FOR CONTROLLED DRYERS IN AMMONIUM SULFATE MANUFACTURING PLANTS.[9]

Plant	Production rate, Mg/h	Dryer type	Control technology	Stack gas temperature, °C	Particulate concentrations,[a] (g/Nm^3)		Controlled emission factor, kg/Mg	Average collection efficiency, %	Control equipment pressure drop, kPa	L/G ratio, liters, per m^3/min
					Inlet	Outlet				
A	13.9	Rotary	Baghouse[c]	46	N/A	0.0490	0.009	98.7[d]	N/A[b]	--
B	N/A	Fluidized bed	Venturi scrubber	85	39.0	0.0430	0.14	99.9	2.5	3.21
C	15.2	Rotary	Centrifugal scrubber	83	8.87	0.206	0.8	98.3	1.5 (design)	0.67 (design)
D	8.45	Rotary	Venturi scrubber	45	98.29	0.190	0.16	99.9	3.2 (design)	3.61 (design)
E	8.9	Fluidized bed	Cyclones and centrifugal scrubber	46	N/A	0.0577	0.14	--	3.3 (design)	0.27 (design)

[a]Each result is an average of three emission tests.
[b]N/A -- Data were not collected or are not available.
[c]Two sets of tests (three tests/set) were collected. The first set is not reported due to discovery of punctures resulting in abnormally high particulate mass loadings.
[d]Efficiency calculated from average inlet concentration from first set of test results.

were highly efficient, removing 98.7 percent of the particulate matter for the baghouse and 99.9 percent for the two scrubbers. For these three collectors plus Plant E where inlet concentration was not measured, the controlled emission factor was less than 0.15 kg/Mg; Plant D was only slightly higher, 0.16 kg/Mg.[a]

9.6.3 Urea Fertilizer

Urea is used as a nitrogen fertilizer in tropical and temperate climates, as a protein supplement in animal feeds, and in plastics manufacturing. The 43 urea plants in the United States are located next to ammonia plants, which supply both the ammonia and carbon dioxide feed streams necessary in urea manufacturing. Urea production in 1979 was 7.16 Tg.[10] More than 99 percent of the particulate matter emitted during urea manufacture consists of urea dust. The other particulates are coating materials and ammonia mist. Particle sizes are either fine (diameters ranging from 2 to 200 micrometers) or coarse (1 to 2 millimeter diameters).[11]

9.6.3.1 Process Description.[4] Urea is produced by reacting ammonia (NH_3) and carbon dioxide (CO_2) to form ammonium carbamate ($NH_4CO_2NH_2$). The carbamate is then dehydrated to yield urea. The final product is distributed either as a 70 to 75 percent urea solution or as a solid.

9.6.3.2 Emissions and Controls. The overall urea manufacturing process can be broken down into the following steps:

1. Solution formation
2. Solution concentration
3. Solids formation
4. Solids cooling
5. Coating and/or additives
6. Screening
7. Bagging, storage, bulk shipping

---

[a]During the testing of plant D, the crystallizer was operating during a fines cycle. The inlet loading to the scrubber was relatively high and particle sizes were fairly small.

9.6.3.2.1 Solution formation and concentration. There are three methods for producing urea: (1) once-through processes, (2) partial recycle processes, and (3) total recycle processes. The most important of these three classes is the total recycle process.

Process vents from the solution formation process are often scrubbed to recover ammonia and other chemicals. There are no data available regarding the control or even the occurrence of particulate emissions from the solution formation process.

Plants using the total recycle process typically integrate the solution formation and concentration steps to conserve energy and to minimize emissions. Particulate emissions from solution formation and concentration are generally small but depend on the specific type of process. Uncontrolled particulate emissions from three different plants range from 0.002 to 0.005 kg/Mg.[12] However, test data from another plant indicates an uncontrolled emission factor of 8.55 kg/Mg.[10]

There are two methods of concentrating urea solution prior to solid formation: crystallization and evaporation. The method chosen depends on the acceptable level of biuret [$(NH_2CO)_2NH$], an impurity formed by a side reaction. To obtain technical grade urea (<0.4 percent biuret), the more expensive alternative, crystallation, is necessary.

Typically, the crystallizers and the evaporators are operated under a steam ejector vacuum. The airswept atmospheric evaporator is the only type of evaporator that is a significant source of particulates. About 40 percent of the urea evaporators are controlled by condensation, 10 percent by wet scrubbing, and 5 percent by demisting. The remaining 35 percent are currently operating without control equipment.

Some evaporators are controlled by venturi scrubbers. Available data show a particulate emissions rate, after such control, of 0.24 g/kg. The exhaust from an evaporator controlled by a wet-scrubber may be recycled in some instances, thus eliminating both particulate and ammonia emissions.

9.6.3.2.2 Solids formation. There are essentially three methods of producing solid urea: prill towers, drum granulators, and pan granulators. About 18 drum granulators are in operation in the United States. Drum granulation accounts for roughly 50 percent of the solid urea produced.

The remaining 50 percent is produced mainly by prilling, with only a small percentage produced by pan granulation. Pan granulation is a recent development and its overall cost is somewhat less than that of drum granulation.

Prilling of urea has emissions analogous to the prilling of ammonium nitrate; the fumes are particularly difficult to eliminate. Uncontrolled emissions are typically 1.0 to 3.0 kg/Mg of urea product.[2,12]

Approximately 45 to 50 percent of urea plants use wet scrubbers for particulate emission control on prill towers. The other plants modify production rates to meet State regulations. Many facilities can meet existing mass emission rate regulations but have difficulty with opacity standards because of the relatively large fraction of fine particles.

In the granulation technique, particles are built up to granules by accretion. The granules produced are larger, with greater abrasion resistance and two to three times the crushing strength of standard prills. These properties result in less crushing, dust formation, and caking upon handling.

Cooling air passing through the drum granulator entrains 15 to 20 percent of the product, but this airstream is smaller (approximately one-third the airflow used in prill towers) and easier to treat than corresponding prill tower airflows. With scrubbers, most of the process drum granulator emissions are relatively low, generally in the range of 0.05 to 0.50 kg/Mg of product.[4,12]

The pan granulator consists of a tilted rotating circular pan. Feed material desposited at the top falls through a fine spray of liquid urea, and the larger granules thus formed spill over the lower edge of the pan onto a conveyor belt. TVA has developed a low temperature (100 to 107°C) process; Norsk-Kydro uses a high temperature (113 to 121°C) process. Cooling is typically accomplished in a rotary drum cooler.

Emissions from pan granulators in the urea industry are expected to be very low compared to those from drum granulators, based on a comparison with similar units in the ammonium nitrate industry. Uncontrolled emissions from one pan granulator in the ammonium nitrate industry were measured to be 1.36 kg/Mg compared to 138-152 kg/Mg for three drum granulators.[1] Controlled emissions can be much lower than those from drum granulators because of the lower airflows.

9.6.3.2.3 Product finishing. Urea product finishing covers cooling, screening, incorporation of additives, and coating. As the cooling drum rotates, particulates are entrained. Particulate emissions from this unit are generally lower than those from a drum granulator. Uncontrolled emissions from one rotary drum cooler were measured to be 3.90 kg/Mg.[12] Wet scrubbers are commonly used to control cooler emissions. Industry test measurements on four low to medium energy scrubbers controlling coolers indicate an emission range of 0.01 to 0.1 kg/Mg.[12] The principal means of product size control is screening. Oversize and undersize material is removed from the product-size solids and recycled. Emissions from screening are difficult to assess but are believed to be low.[12]

The primary purpose of coatings and additives is to reduce caking and dust formation. The most common additives are formaldehyde and phosphate-based compounds. In most plants, material commonly is transported by conveyors from one process step to another. Urea shipment is either by bag or bulk. Data provided by industry indicate the uncontrolled emissions from bagging operations are about 0.1 kg/Mg.[12] The trend has been toward bulk handling. Solution bulk shipment of urea is in tank cars.

It is somewhat difficult to predict or determine emissions from urea product handling activities, since most are fugitive sources. For bagging operations, a "worst case" value of 0.15 kg particulates/Mg of urea handled has been estimated on the basis of the fraction of fines.[13]

9.6.3.3 Secondary Environmental Impacts. Wet scrubbing produces wastewater that needs treatment. The treatment includes sending the effluent stream to a hydrolyzer where the urea is decomposed.[6]

9.6.4 Diammonium Phosphate Fertilizer

Particulate emissions from the manufacture of diammonium phosphate fertilizer include ammonia mist and solid diammonium phosphate; such emissions amounted to 2.5 Gg in 1977.[3] Both of these typically contain fluorides, which are released from the phosphate rock and dilute phosphoric acid scrubbing solution used to recover ammonia.[14]

9.6.4.1 Process Description. Diammonium phosphate is formed by reacting ammonia gas with phosphate rock to form a slurry. This slurry is further

reacted in the granulator with ammonia and recycled diammonium phosphate to form solid diammonium phosphate. The product is dried, cooled, and screened prior to storage. Dilute phosphoric acid scrubbing is used to recover ammonia from the reactor and granulator exhaust gases.

The granulator, dryer, and screens are the main emission sources of solid particulates. Ammonia mist is emitted by the scrubbers on the reactor.[14] A flow diagram of diammonium phosphate production is given in Figure 9.6-4[15] and stack parameter data are listed in Table 9.6-3.[13]

9.6.4.2 Emission Control Techniques. Ammonia emissions are very effectively controlled by scrubbers using a dilute (30 to 40 percent) phosphoric acid scrubbing solution. These scrubbers are either venturi or two-stage cyclonic scrubbers. Venturi scrubbers are more commonly used because of their higher efficiency in small particle removal.[15] Most plants already recover ammonia from the effluent gas streams because of the high cost of ammonia. Therefore, ammonia emissions tend to be quite low. Emissions from all sources at the plant can be treated by the phosphoric acid scrubbers, but are usually passed through cyclones for product recovery first. Particulate efficiency data for these controls are not readily available.

9.6.5 Grain Handling and Storage

Grain handling operations include the shipping, receiving, weighing, transfer and conveying, cleaning, drying, and storage of grains. These operations are carried out at country and terminal elevators, as well as at grain milling plants. The main pollutant emitted during grain handling operations is grain dust; such emissions amounted to 670 Gg in 1977.[3] Other emissions include sand, dirt, and trash. Although particulate sizes vary widely, 99.5 percent of the suspended particulate matter is less than 2 micrometers in diameter, and 50 percent is less than 0.03 micrometers.[16] The characteristics of the particles vary with the type of grain handled. Corn handling produces "bees wings" emissions--large, low density particles which are easily airborne. Dirt particulate matter, collected while harvesting short-stemmed soybean plants, is emitted during soybean handling.

Country elevators are usually located within 15 to 30 km of the grain fields and operate only during the harvesting season (June to November).[16]

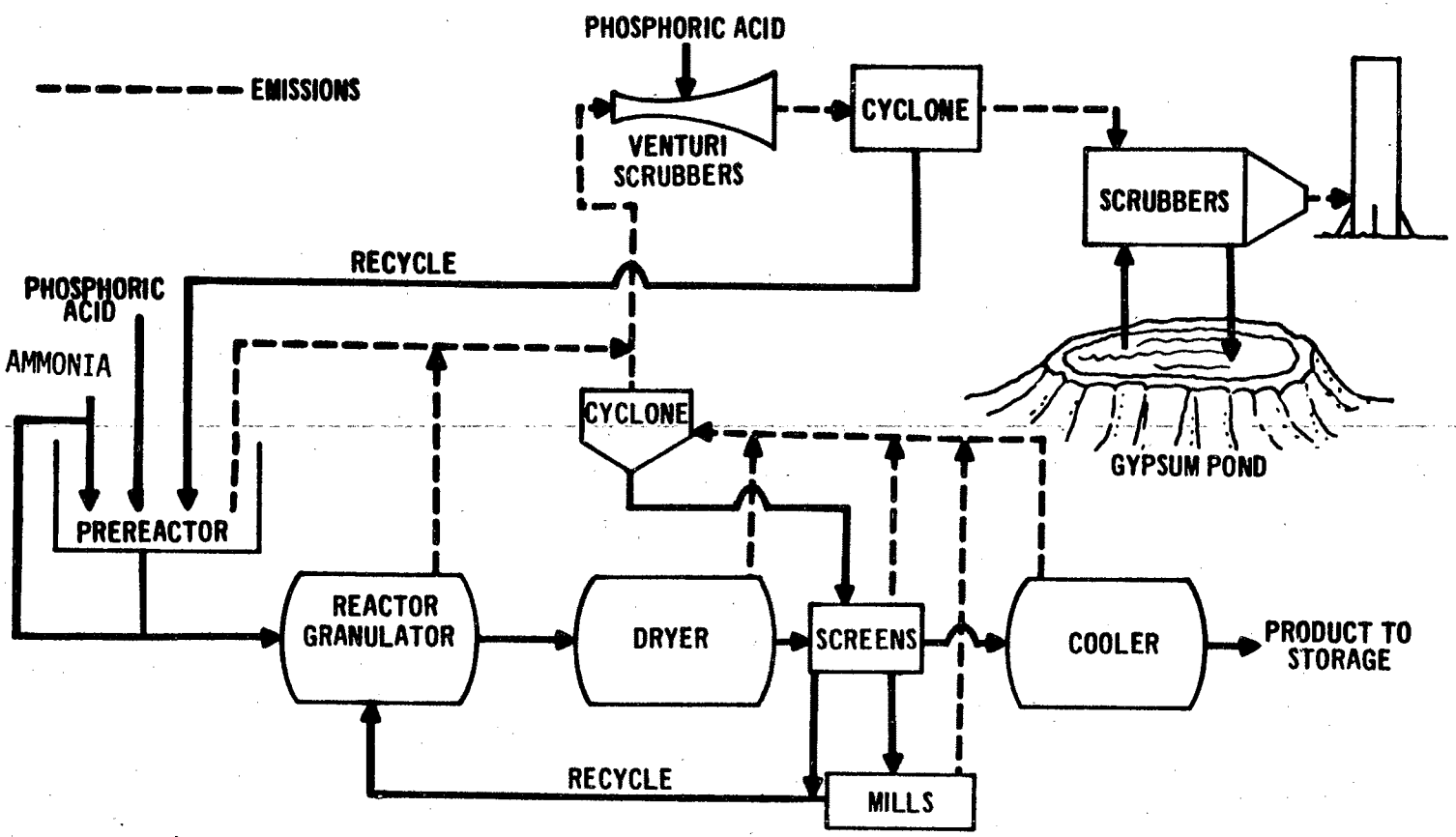

Figure 9.6-4 Diammonium phosphate production.[15]

Table 9.6-3. DIAMMONIUM PHOSPHATE PRODUCTION STACK PARAMETER DATA[13]

Emission sources	Number of sources	Average stack height, m	Average stack diameter, m	Average temperature, °C	Average gas flowrate, Am^3/s
Dryer and cooler	59	26	1.3	64	20
Ammoniator and granulator	71	26	1.1	53	14

Approximately 85 percent of the grain harvested is sent to country elevators; the remaining portion is shipped to terminal elevators or grain mills. Terminal elevators are located throughout the country, frequently in metropolitan areas. These elevators operate year-round and have storage capacities averaging 1.4×10^5 cubic meters of grain.[16]

9.6.5.1 Process Description. Grain is unloaded from trucks, trains, or barges into large receiving hoppers and is then conveyed to storage silos. To prevent rotting during storage, some grains are dried in gas-fired rack or column dryers. Corn and soybeans typically need to be dried. Before being transported to the next purchaser, grain may be screened to remove sticks, stones and other large trash. It is then weighed and loaded into trucks, trains, barges or ships.

9.6.5.2 Emission Characteristics And Applicable Control Technology. Industrial process fugitive particulate emissions are produced during all phases of grain handling. The most common control strategy is to enclose and hood the processing equipment or area with ventilation to cyclones and filters (see Volume 1, Section 5). Cyclones used in this application operate with pressure drops of 0.75 to 1.2 kPa and have control efficiencies of 85 to 95 percent.[16] Fabric filters are more frequently used at terminal elevators, which are usually located in metropolitan areas where control regulations are more stringent. These filters typically use felted synthetic fabric and operate at filtering velocities of between 3 and 4.6 m/min.[15]

Unloading operations produce large quantities of airborne grain dust, especially if power shovels or front end loaders are used to assist in the process. Emissions can be reduced by unloading the grain slowly, reducing the free-fall distance, and enclosing the unloading area with ventilation to either cyclones or fabric filters.[16]

Industrial process fugitive emissions from conveyer belts occur primarily at transfer points, when the grain is transferred from one belt to the next. Placing a hood over the transfer point and venting to cyclones or fabric filters reduce emissions from this source. The capture speed of hoods over conveyer transfer points should be approximately 100 times the speed of the conveyer belt to overcome the laminar layer of air conveying particulates away from the hood.[16] The same technique can be used to

reduce emissions from screw conveyers, which tend to produce more emissions than belt conveyers.

Emissions from both rack and column dryers can be controlled by vacuum cleaned screens built around the dryer. Column dryers, in which the grain flows down between two perforated metal sheets, emit less particulate matter than rack dryers. Rack dryers have baffles or racks around which the grain and hot air must flow, creating a cascading motion of the grain which results in increased particulate emissions. The emissions from an uncontrolled column dryer are approximately equal to the emissions from a rack dryer controlled with a vacuum cleaned 50-mesh screen.

Typical controlled and uncontrolled emission factors for grain handling operations are shown in Table 9.6-4, while average emission source characteristics are summarized in Table 9.6-5.

9.6.5.3 Secondary Environmental Impacts. In general, all acceptable control alternatives involve the use of dry type particulate matter collection devices; therefore, no liquid wastes are generated. With regard to solid waste impacts, it is estimated that currently 68 percent of the particulate matter collected by emission control devices at elevators is returned to the grain, 30 percent is sold for use in feed manufacturing, and 2 percent is disposed of as solid waste. The additional particulate matter collected by more efficient control devices can be sold as feed or landfilled.[16]

Energy requirements for systems to control particulate emissions are proportional to the volume of air that must be moved, the pressure drop of the systems, and the amount of time each system operates. Table 9.6-6 presents an estimate of the energy required to operate model control systems installed on elevators of various typical sizes.

9.6.6 Grain Processing

Grain processing involves the operations of cleaning, drying, and grinding. The milled grains, used mainly for flour production, include wheat, dry corn, durum, rye, and oats. Information on wet corn or soybean milling is in Sections 9.6.9 and 9.6.10. Since dry corn and wheat milling are the largest segments of the grain milling industry, emissions from the milling of these two grains will be stressed in this discussion.

9.6.6.1 Process Description. Grains may be contaminated with such impurities as sticks, stones, metal, and dirt, which are removed by a variety

Table 9.6-4. GRAIN HANDLING OPERATIONS EMISSION FACTORS (COMPILED FROM REFERENCE 16)

Process	Emission factors, (kg/Mg of grain) Uncontrolled	Controlled	Control method
Grain unloading			
o Truck	0.3	0.03 0.003	Cyclone Fabric filter
o Railcar	0.65	0.05 0.0001	Cyclone Fabric filter
o Barge	0.85	0.1 0.0003	Cyclone Fabric filter
Screens	1.6	0.15 0.0015	Cyclone Fabric filter
Cleaning operations	3.0	0.3 0.007	Cyclone Fabric filter
Handling operations	3.0	0.05 0.0001	Cyclone Fabric filter
Dryers			
o Rack	2.0	0.015 0.025	Vacuum cleaned 50-mesh screen Vacuum cleaned 100-mesh screen
o Column	0.13	0.009 0.025	58-mesh screen Use 12.7-mm diameter perforations in column sheeting
Grain loading			
o Truck	0.14	0.015 0.0005	Cyclone Fabric filter
o Railcar	0.14	0.015 0.0005	Cyclone Fabric filter
o Barge	0.6	0.03 0.0005	Cyclone Fabric filter

Table 9.6-5. FEED AND GRAIN ELEVATORS STACK PARAMETER DATA[13]

Emission sources	Number of sources	Average stack height, (m)	Average stack diameter, (m)	Average temperature, (°C)	Average gas flowrate, (Am^3/s)
Terminal elevator					
Shipping and receiving	959	17	0.77	23	8.1
Transfer and conveying	840	29	0.65	29	5.6
Screening and cleaning	328	20	0.71	21	5.9
Drying	339	20	1.4	52	16
Country elevator					
Shipping and receiving	5113	16	2.6	22	65
Transfer and conveying	2666	22	2.2	22	62
Screening and cleaning	1154	15	3.2	22	44
Drying	2430	14	1.6	30	98

Table 9.6-6. CALCULATED ENERGY REQUIREMENTS TO OPERATE ALTERNATE GRAIN ELEVATOR CONTROL SYSTEMS[16]

Facility	Energy required for control system[a], kWh/yr			Percent increase in energy required due to control system, %		
	System 1	System 2	System 3	System 1	System 2	System 3
County elevator (1 million bu/yr)	32,000	40,000	42,000	12.5	15.6	16.4
High throughput terminal (3.5 million bu/yr)	112,000	140,000	147,000	12.5	15.6	16.4
Inland terminal (15 million bu/yr)	619,200	634,000	636,500	22.5	23	23.1
Part terminal (40 million bu/yr)	716,400	763,000	766,000	18.2	19.4	19.5
Process storage	840,000	1,050,000	1,052,000	21.5	26.9	27

[a]System 1 is designed to meet typical State standards and consists of:
- o High-efficiency cyclones on all affected facilities (excluding dryers), except railcar unloading at port terminals, barge and ship loading at inland terminals, and barge and ship unloading where fabric filter controls are required.
- o No screens (filters) on column dryers and 20 to 30 mesh screens on rack dryers.

System 2 is designed to meet NSPS and consists of:
- o Fabric filter control on all affected facilities excluding dryers.
- o No screens (filters) on column dryers and 50 or finer mesh vacuum-cleaned screens on rack dryers.
- o Three-sided shed on truck unloading and truck loading.
- o Shed with two open ends for boxcar and hopper car loading.
- o Totally enclosed shed for railcar unloading.
- o Totally enclosed leg for barge and ship unloading.

System 3 represents the best control technology possible not considering costs. System 3 is identical to System 2 except for the following items:
- o 100 mesh vacuum-cleaned screens (filters) on column and rack dryers.
- o Totally enclosed sheds on truck unloading, truck loading, boxcar loading and hopper car loading operations.

of cleaning devices. Vibrating screens remove the larger trash while smaller items are removed with magnetic separators, scourers, and disk separators. Corn is frequently washed in a washing-destoning device and then dewatered. Dust, chaff, dirt, and seeds may all be emitted during the grain cleaning operation.

Drying removes excess moisture to prevent rotting and conditions the grain for grinding. Particulate emission rates from grain driers are dependent on several factors, including the type of dryer used and the grain being dried.[17] Oats are frequently dried in either a rotary steam tube dryer or in 3 to 3.7 m diameter pan dryers which are stacked on top of each other in a steam jacketed vessel. These dryers are generally not significant sources of particulate emissions. Other grains are dried in column or rack dryers. Column dryers, using recirculated air, tend to emit less particulate matter than rack dryers.[17] Corn dryers emit primarily large flaked particles known as "bee's wings."

After drying, breakrolls and hammermills are used to remove the endosperm from the bran and germ and then grind it into flour. The endosperm is separated from the rest of the grain by sifters. In this process, the breakrolls emit bran and grain dust while flour is emitted from other milling equipment.

9.6.6.2 Emission Control Techniques. In 1977, particulate emissions from the grain processing and milling industry amounted to 7.8 Gg.[3] The most serious particulate emission problems are created by the grain cleaning equipment and the dryers.[18] Grinding and milling operations also emit particulate matter but to a lesser degree. Controls used in the drying and cleaning processes are similar to those used at grain elevators during grain handling operations. Venting the emissions to fabric filters provides the best control for cleaning-house and milling emissions; however, cyclones are used more frequently. Milling emissions are also controlled by fabric filters and cyclones. Dryer emissions can be reduced by using self-cleaning screens or by redesigning the dryer with small perforations in the dryer walls rather than with louvered openings for air flow.[15,17,18] (Refer to Section 9.6.5 for more details on these controls.) Fabric filters may be used to control dryer emissions that do not contain excessive moisture; however, this is not often the case.

9.6.6.3 Secondary Environmental Impacts. Devices used to control emissions produced in grain milling have minimal secondary environmental effects, except that additional power is required to operate them. The solid waste collected by control equipment can be sold as animal feed or used for landfill.

9.6.7 Alfalfa Dehydrating

Dehydrated alfalfa, used as animal feed, is produced at over 30 plants in the United States.[17] These plants are located primarily in Nebraska and the northern plains States. Alfalfa dust, emitted in the drying and grinding operations, is the major particulate pollutant. Dust emissions range in size from 0.2 to 20 micrometers in diameter.[19]

9.6.7.1 Process Description. Alfalfa is fed to a rotary dryer, and then pneumatically conveyed to a hammermill where it is ground into a fine meal. This meal is bagged, stored, or pressed into pellets. Product recovery cyclones collect entrained alfalfa dust from the dryer and hammermill (grinder) exhaust air streams. An alfalfa plant process flow diagram is given in Figure 9.6-5.

Fine alfalfa dust is emitted by the primary cyclone, which follows the dryer in the process. Other emission sources include the grinder and bagger cyclones, the pellet cooler, and the handling operations.

9.6.7.2 Emission Controls Techniques. More than 75 percent of the particulate emissions from alfalfa processing are emitted from the dryer.[18] The quantity and size distribution of dryer emissions are highly dependent on the quality of the alfalfa hay (i.e., the protein content, age, insect damage, and moisture content).[19] Emissions from the dryer and from all other sources are significantly increased when the alfalfa is overdried, a common occurrence during periods of high productivity. The first step in controlling dryer emissions is to maintain all equipment properly. Harvesting equipment should have sharp blades and the dryer should be monitored to ensure that the flame does not impinge on the green chops and that the chops are not overdried. In addition, cyclones should be designed and maintained to achieve the highest collection efficiency. Another way to reduce dryer emissions is to recycle a portion of the primary cyclone exhaust back to the dryer furnace, a step which also decreases the net amount of gases to be treated if additional control is necessary. Finally, a medium energy wet

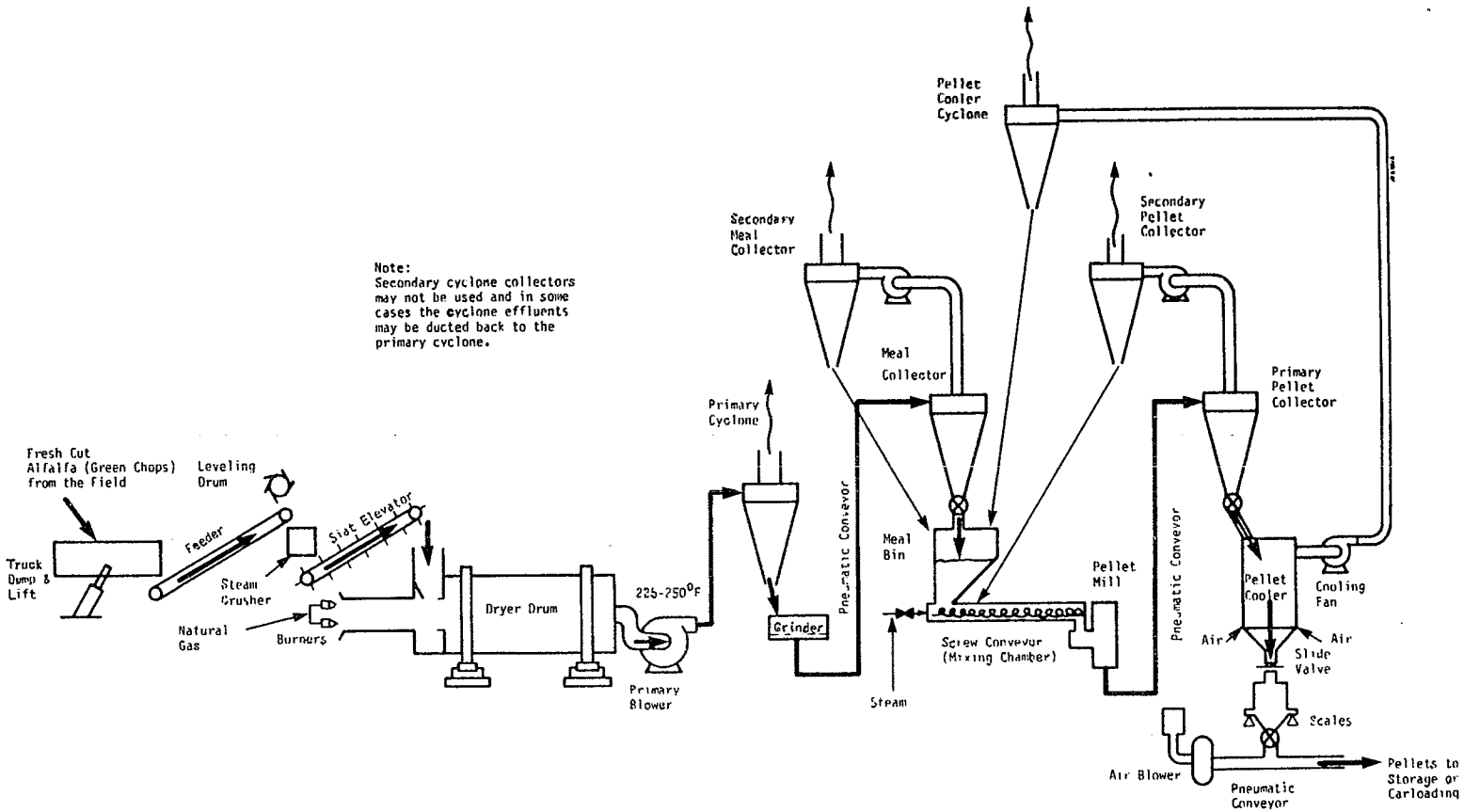

Figure 9.6-5 Generalized flow diagram for alfalfa dehydration plant.[17]

scrubber operating at a pressure drop of 1 to 1.25 kPa can be used to reduce dust emissions from the dryer by at least 50 percent.[20] Smoke emissions from the dryer, typically between 0.2 to 0.5 micrometers in diameter, are not effectively controlled by a medium energy scrubber.[20] Several scrubber designs have been tested at alfalfa plants; and Reference 20 describes these systems in detail.

Hammermill cyclone emissions can be controlled by using either a wet scrubber or baghouse. If a scrubber is used, emissions from both the hammermill and the dryer cyclones can be ducted to a common scrubber. With baghouses, a "burn out" loop of approximately 18 meters between the cyclone and the baghouse should be used to reduce fire potential.[19] Emissions can also be controlled by recycling a portion of the exhaust back to the hammermill.

Good engineering design and maintenance should be sufficient in controlling pellet cooler emissions. Industrial process fugitive emissions from handling operations may be controlled by enclosure and ventilation of the area to a baghouse or scrubber.

Another technique to decrease the production of particles while increasing their collectibility is liquid fat injection. Injecting 2 or 4 percent fat prior to the hammermill has been shown to reduce fine particle formation in addition to reducing total particulate emissions from the cyclones by 96.4 or 99.4 percent, respectively.[19] The cyclones used to control emissions from the grinders operate at pressure drops between 0.25 to 0.5 kPa. Liquid fat injection requires additional equipment to store heat and inject the fat.[21]

9.6.7.3 Secondary Environmental Impacts. The scrubbers used in treating dryer exhausts can produce approximately 3800 liters/min of sludge water, creating a formidable disposal problem.[21] Settling and evaporation ponds can be used to concentrate the sludge. The surface water can then be drained off and used in field irrigation, while the built up sludge layer can be used as fertilizer. Alternatively, the scrubber effluent can be clarified with a chemical treatment of lime and synthetic polymers, sodium hydroxide, or soda ash.[21]

9.6.8 Cotton Ginning

Cotton gins separate cotton fiber (lint) from cottonseed and trash. There were 2771 gins in the United States in 1976, located in the South and

Southwest.[22] Gins located in Texas, California, and Missisippi handled over half of the 2.3 Tg of cotton ginned in 1976.[22] Although the ginning season lasts from August through February, the average cotton gin operates 10 hr/day, 6 days/week for 10 weeks in the late autumn. The industry trend is to extend this operating period by using fewer, larger gins which operate continually.[22]

Emissions from cotton ginning consist of dust, fine-leaf trash, lint, cotton dust, and other trash. The amount and nature of trash to be found in the cotton depends heavily on the harvesting technique. Spindle picker machines remove the cotton from the burrs with a rotating spindle, picking up a minimum of dirt and leaves and leaving unopened bolls (pods) behind. Stripper machines strip the cotton off the plants along with the burrs, unopened bolls, leaves, stems, and soil. In arid areas of the Southwest, where plants are smaller, shorter-stemmed, and have a lower yield, stripper harvesting is used to minimize harvesting expenses. Most harvesting (65 percent) is accomplished with picker harvesters.[22]

Cotton dust may contain trace amounts of pesticides, such as DDT or toxaphene, desiccants, or defoliants. Defoliants are sprayed on cotton plants to reduce the amount of green leaves and stems on the cotton stalk to picker-harvested. Sodium chlorate and tributylphosphorotrithioates (DEF and Folex) were the predominant (greater than 90 percent) defoliants used in 1971. A desiccant, generally arsenic acid or paraquat, is sprayed on cotton fields to be stripper-harvested before a frost. This spray reduces the moisture content of the stems and leaves. Uncontrolled emissions from this industry were 15.6 Gg in 1977.[3]

9.6.8.1 Process Decription. Cotton ginning involves five basic steps: (1) unloading, (2) seed cotton drying and cleaning, (3) overflow storage and distribution, (4) lint cotton cleaning and handling, and (5) baling. Also involved is the separation of lint from seed in gin stands. The cotton is usually conveyed pneumatically from one step to the next. A simplified diagram of ginning operations, showing emission sources, is presented in Figure 9.6-6.

Each of these steps produces particulate emissions. Fine leaf trash and dust are typically emitted from the unloading fan, inclined cleaner, trash

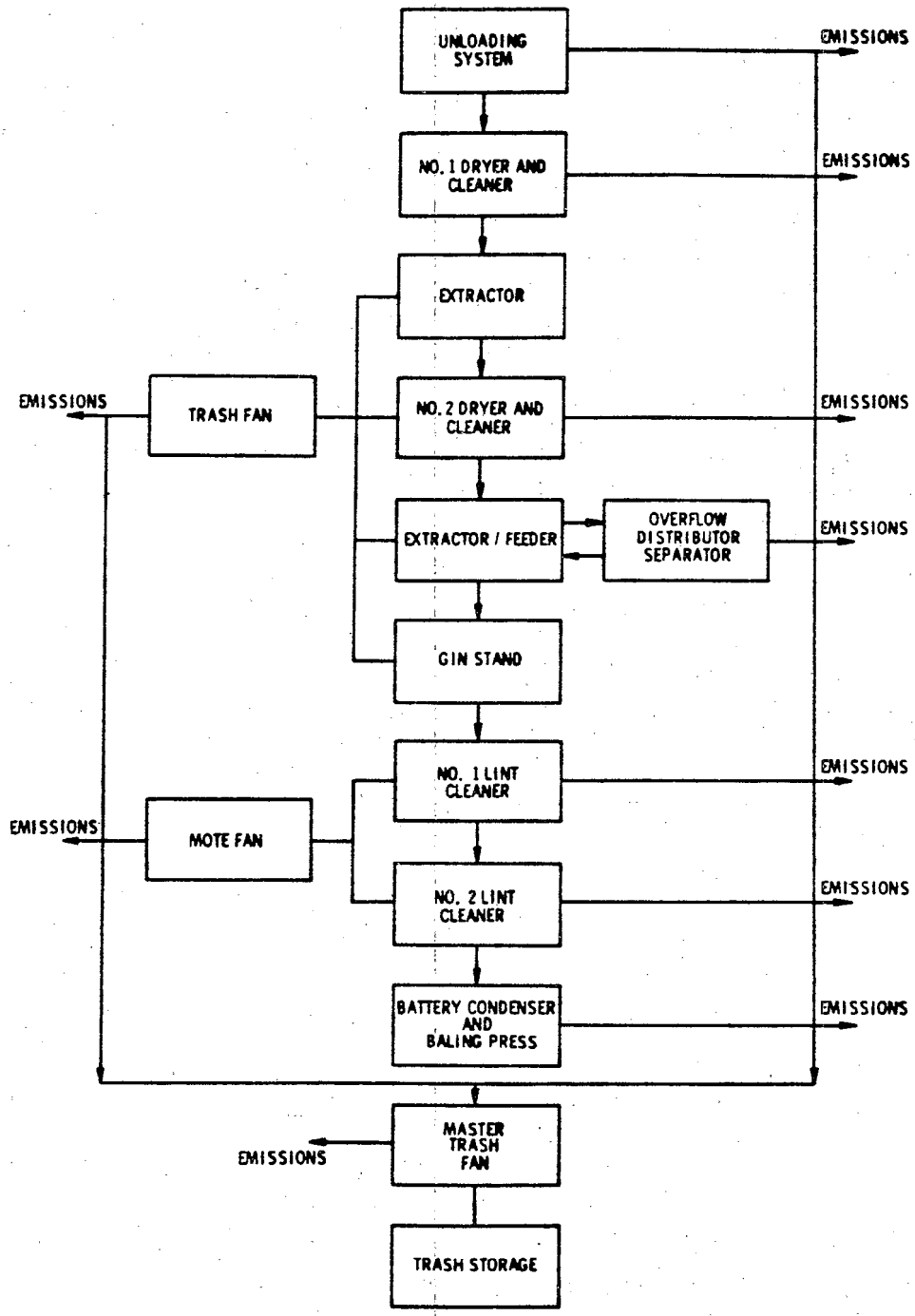

Figure 9.6-6 Typical ginning operation.[22]

fan, and overflow system. Lint fly and cotton dust are emitted from the gin stands, lint cleaner condensers, battery condensers, and mote fan (a mote is an immature seed with short immature fibers attached).

9.6.8.2 Emission Control Techniques. The particulate emissions, produced during each phase of cotton ginning, are commonly reduced by cyclones and filters. Wet scrubbers and, in some instances, process modifications have also been used. The trash collected in these devices can be incinerated or plowed back into the fields. Table 9.6-7 lists controls used for cotton gin emission sources.[23,24]

Cyclones are the most frequently used particulate control device and are used to reduce larger particulate emissions from the unloading fan, inclined cleaners, extractor feeders, and gin stands. Even where other controls are used, exhaust streams are typically first passed through a cyclone. More than 90 percent of the cyclones used are small in diameter (less than 0.96 m), high in efficiency, and capable of collecting more than 99 percent of particles which are larger than 125 micrometers.[22] A typical 0.86 m diameter cyclone operates at a back pressure of between 1.0 kPa to 1.2 kPa.

Filters are used less frequently than cyclones. Filters are used primarily for controlling lint cleaner and battery condenser emissions, but recent studies have shown that they can be quite effective in reducing emissions from all discharge points when such emissions are ducted to a common filter. These filters consist of a fixed or rotating screen mounted in an enclosed housing. The mesh can be cleaned by either a wiping arm or a line of vacuum nozzles which continually remove trash. The air stream discharged from the vacuum is conveyed to high efficiency cyclones. Collection efficiencies for in-line filters are typically about 99 percent for lint fly and 80 percent overall on stripper-harvested cotton.[22] The vacuum filter used to control emission from all discharge points has a reported efficiency of 95 percent.[25]

Scrubbers and skimmer and spray columns are used less frequently in controlling cotton gin emissions. As of January 1978, less than five cotton gins used wet scrubbers.[22] The reported collection efficiency of wet scrubbers for lint cleaner emissions ranges from 74.1 percent to 96.2 percent.[25] Higher collection efficiencies can be achieved with skimmer and spray columns which have reported efficiencies of 98.3 to 99.8 percent.

Table 9.6-7. PARTICULATE CONTROL DEVICES APPLICABLE TO COTTON GINNING OPERATIONS (ADAPTED FROM REFERENCES 23,24)

Emission source	Control devices	Efficiency, (%)
Unloading separator	Cyclone, process modification	99
Inclined cleaner	Cyclone, wet scrubber	72 to 96
Extractor feeder and gin stands	Cyclone	99
Lint cleaner	Wet scrubber, in-line filter	72 to 96
Battery condenser	Wet scrubber, in-line filter	72 to 96
Process heater	(No controls used at present)	--

Ginning emissions can be reduced by process modifications which involve the proper adjustment of harvest equipment so that less trash is entrained in the cotton during harvesting. Stack parameter data for typical emission sources are presented in Table 9.6-8.

9.6.8.3 Secondary Environmental Impacts. Solid waste collected by the use of filters and cyclones can be incinerated or used as landfill. Incineration, however, generates additional air pollutants such as particulate matter, nitrogen oxides, and sulfur oxides. Wastewater from wet scrubbing devices needs to be treated to avoid the odor produced by excessive bacterial growth.

9.6.9 Starch Manufacture

The starch industry includes primarily corn wet milling, potato starch milling, and wheat starch milling processes. The corn wet milling process, the largest of the three operations, produces corn starch, speciality starches, corn syrup, high fructose corn syrup, animal feed by-products, and corn oil. Wheat milling processes yield animal feed, starch, flour, and wheat gluten for making breads. The potato starch industry manufactures both potato starch and animal feed. Starch products, although primarily used in the food industry, are also used in paper, textiles, absorbents, insecticides, plastics and in rubber.

There are 24 corn wet milling plants in the United States.[17] These plants produced approximately 9.8×10^6 megagrams of corn products in 1977.[17] The particulate emissions produced during starch production are primarily grain dust, sand, dirt, and fine starch particulate matter.

9.6.9.1 Process Description. Starch is separated from corn in a process consisting of three basic steps: (1) corn steeping, (2) milling, and (3) dewatering. Steeping the corn in hot water conditions the grain for further processing, softens the kernel, and helps to break down the protein (gluten) which contains the starch particles. After the water is evaporated, the corn is ground, washed, screened, and centrifuged to separate the starch from the fibrous corn material. The spent corn is then dried and sold as animal feed (gluten feed and meal). The starch slurry from the centrifuges is dewatered in vacuum filters or basket centrifuges and then dried. Between 40 and 70 percent of this starch is used in corn syrup and sugar production;

Table 9.6-8. COTTON GINNING STACK PARAMETER DATA[13]

Emission sources	Number of sources	Average stack height, m	Average stack diameter, m	Average temperature, °C	Average gas flowrate, Am^3/s
Unloading fan	870	5.8	0.83	21	8.1
Cleaner	837	6.5	0.89	22	8.9
Stick and burr machinery	847	5.8	0.71	21	6.0

the rest is bagged for shipment.[18] Figure 9.6-7 shows a flow diagram of corn wet milling processes.[26]

9.6.9.2 Emissions and Controls. Particulate emissions produced in the corn receiving and handling operations are controlled by the strategy described for grain handling operations in Section 9.6.5. See Table 9.6-9 for uncontrolled and controlled emissions.[27] Emissions produced from gluten feed, gluten meal, germ, and starch dryers consist of both solid particles and possibly aerosols formed from condensible gases. Product recovery cyclones, typically used to collect valuable particulate matter from the dryer exhaust streams, are actually the source of emissions. High energy cyclones operating with efficiencies ranging from 95 percent to 98 percent are usually used to reduce dryer emissions.[18] Emissions from starch and animal feed dryers can be reduced further by using a wet scrubber after the cyclone. Scrubbers used in this application achieve efficiencies of 98 to 99 percent.[18] Baghouses may also be used for starch dryers if adequate precautions are taken to prevent explosions. Other particulate emission sources--the feed pellet mills, feed house, and dry starch grinders--can be controlled with fabric filters (99+ percent efficent).[18] Stack parameter data for typical emission sources are given in Table 9.6-10.

9.6.10 Vegetable Oil

Vegetable oil is extracted from soybeans, cottonseeds, peanuts, and corn. Soybean oil constitutes more than 80 percent of the vegetable oil market; therefore, Section 9.6.10 is limited to this segment of the vegetable oil industry. Processing techniques and emission control techniques for the other types of vegetable oils are similar.

There are approximately 100 soybean processing plants in the United States, 88 of which crush soybeans nearly 100 percent of their processing time. Eighty-three of the 100 plants are full-time solvent extraction operations and are owned and operated by approximately 30 companies.

Processing plants are located in 21 States. Iowa and Illinois are the two largest soybean processing States with 14 and 13 processing plants, respectively. Geographically, processing plants are found in the Midwest, South, and Middle Atlantic regions of the United States.

Domestic soybean production increased from 15 million metric tons in 1960 to 41.4 million metric tons in 1975 and up to 50.1 million metric tons

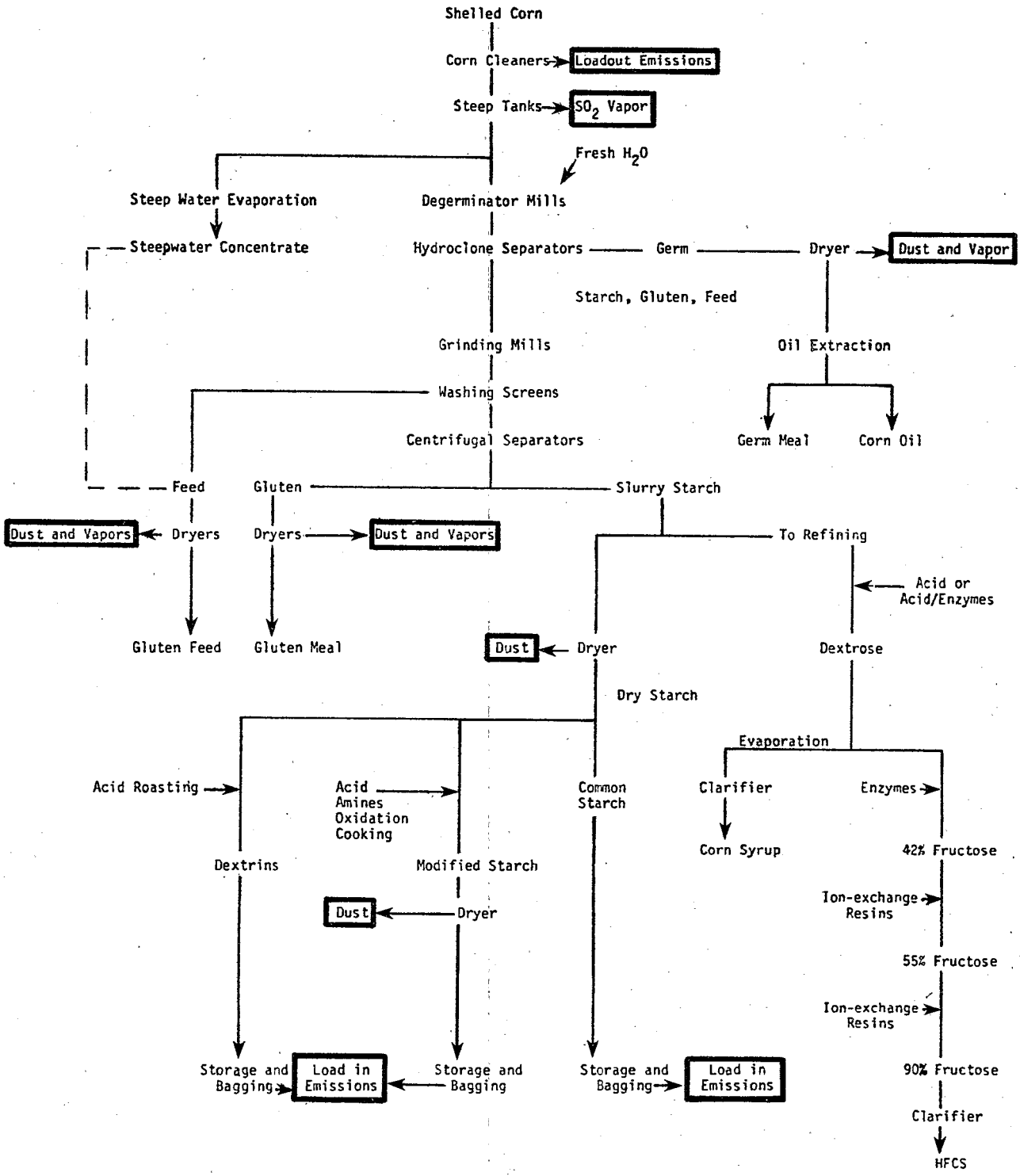

Figure 9.6-7. Corn wet milling flow diagram.

Table 9.6-9. EMISSION FACTORS FOR STARCH MANUFACTURING[27]
EMISSION FACTOR RATING: D

Type of operation	Particulates, kg/MT	Particulates, lb/ton
Uncontrolled	4	8
Controlled[a]	0.01	0.02

[a]Based on centrifugal gas scrubber.

Table 9.6-10. STARCH MANUFACTURING STACK PARAMETER DATA[13]

Dryer stack parameters	Average value
Number of sources	109[a]
Stack height, m	16
Stack diameter, m	0.61
Stack temperature, °C	43
Gas flowrate, Am^3/s	6.12

[a]Represents number of sources surveyed.

in 1978/79. Soybean production is expected to expand to 58 million metric tons by 1985. U.S. soybean oil production is projected to be slightly less than 5.6 million metric tons by 1985.

With the soybean processing industry currently operating at an 80 to 85 percent capacity, a large portion of the projected growth in crushing will likely take place in existing soybean mills by their expanding to 90 to 95 percent operating capacity. The remainder of the growth will be in new soybean plants, and an increase of about one new plant each year is projected.

9.6.10.1 Process Description. Processing techniques used in manufacturing vegetable oils from soybeans by the solvent extraction method include: cleaning, drying and storage processes which are described in Section 9.6.5; cracking and dehulling; conditioning and flaking; solvent extraction and desolventizing-toasting; meal drying and cooling; and meal grinding, screening and loadout.

Soybeans are usually cracked into six or eight parts by a cracking mill before dehulling. Cracking mills consist of two pairs of rolls approximately 30 cm (11.8 in) in diameter and 130 cm (51.18 in) long. Rolls this size are capable of cracking 449.6 metric tons per day of soybeans. Proper cracking aids the dehulling, extraction, and flaking processes, permitting the release of more oil.[28] A particulate recovery device such as a baghouse is usually adapted to the cracker.

The purpose of dehulling and removing the hulls from the solvent extraction process stream is to prevent hulls from absorbing and retaining soybean oil through the remainder of the process. The dehulling process consists of air suction and screening to separate hull from meat by density. (The suction air is passed through a particulate collector.) Once separated, the hulls may be ground and used for feed. The hulls are screened and passed over a gravity table cyclically to screen out larger particles. The gravity table typically has a particulate collection device such as a baghouse adapted to it. The hulls are heated, ground, and then ground again with meal derived from extraction.[29] Additional particulate collection devices may be added to the two systems as needed.

Conditioning is a process in which the dehulled soybeans are raised to a temperature of approximately 72°C (160°F), and the moisture content is

adjusted to 10 to 11 percent in a horizontal, steam-jacketed tube.[29] By optimizing temperature and moisture content, the soybeans obtain a plasticity that permits good flaking.

Flaking mills compress the soybeans into flakes with thickness of from 0.020 cm (0.008 in) to 0.030 cm (0.012 in). Flaking causes rupturing of oil cells and increases porosity, thus decreasing extraction time and desolventization time. The large surface area and ruptured cells increase the chances of oxidation and hydrolysis. Thus, as flake thickness increases, the rate of extraction decreases significantly.

Upon completion of flaking, the flakes should have a 10 percent moisture content and a temperature of approximately 60°C (140°F). The conditioner and flaker usually have their own particulate control system, e.g., cyclones.

The soybean flakes are conveyed to a continuous solvent extraction system. Solvent, most commonly solvent grade hexane, flows countercurrent to soybean flakes, extracting soybean oil. The solvent-oil mixture, miscella, is transferred to other stages of processing where oil is recovered from the miscella and eventually refined.

The solvent-wet flakes are transported to a desolventizer-toaster. In this device, solvent is steam-evaporated out of the flakes for recovery, and the flakes are toasted.

Following desolventization, the flakes proceed to a dryer with natural or forced draft that typically operates at a temperature of 110°C (230°F). The dryer decreases meal moisture from 20 percent to less than 12 percent. A common dryer type is the rotary steam tube dryer. This dryer type is favored for large capacity processing; it requires less floor space and is more economical than dryers such as the vertical stack dryer. A particulate control device such as a cyclone may be an optional addition.

The dried meal exits the dryer at a temperature of 110°C (230°F) and is transported to a cooler that reduces its temperature to less than 40°C (104°F). A pneumatic cooling system, a rotary cooler, and the French louver meal cooler are three coolers commonly used. A cyclone is usually added to the cooler.

The meal proceeds through a cyclic system of grinding and screening to assure proper particle size for meal flakes. The ground meal is then prepared

for shipment (which may include bagging) and conveyed to a loadout area. Meal may be transported by truck, rail, or ship. Cyclones or baghouses are usually applied in these areas to recover dust which could escape during the processes.

Particulate emission point sources in soybean processing plants may be either controlled or uncontrolled. Some process equipment at plants vent particulate emissions directly to the atmosphere without any form of control; but, more often, process equipment emissions are vented through low to medium energy cyclones, which are used primarily for product recovery. For example, a medium energy cyclone may be added to a meal cooler because of the economic incentive to recover effluent product. These low-to-medium energy cyclones are not the best choice for emission control and would result in an incidental, perhaps marginal gain in particulate emissions control.

Fugitive particulate emissions--which are those particulate emissions that are not collected by either controlled or uncontrolled venting--are also found in the soybean and soybean meal preparation areas of processing plants. Sources of fugitive emissions include maintenance openings in the solids handling areas and leaks in the solids transport lines.

Fugitive particulates from soybean and hull storage, handling, and grinding processes often have particulate matter larger in size than particulate matter emitted from cyclones and baghouses. These emissions can be decreased by eliminating window and roof openings and by ventilating the work-area air through baghouses and cyclones. However, no data are available on actual quantities of fugitive dust emissions in the soybean processing industry.

9.6.10.2 Emission Control Techniques. The current practice in soybean processing plants is to rely almost exclusively on cyclones and fabric filters to control particulate emissions. (Screens are often incorporated into the bean drying apparatus to control emissions at that point.) However, wet scrubbers have been used in the past and may continue to be used at some processing plants in the future. Soybean processing plants feature enclosed conveyors and extensive hooding with pneumatic conveying systems leading to dust collectors. The performance of these systems is partially determined by maintenance and operational practices, and there appears to be considerable variance in the effectiveness of systems among different plants.

Although visible emissions are rare, there is accumulated particulate matter around some plants, suggesting either that emissions do occur on occasion or that particulate matter accumulates during repairs and is not subsequently cleaned up. Particulate matter may also accumulate because source control measures such as covers, enclosures, and regulated air flows are circumvented by improper use or maintenance. By contrast, other plants appear to have very little accumulation of dust.

The bulk loadout of meal is a particulate source that appears difficult to control, and the success of the control apparatus is largely dependent on operational practices. A typical truck loadout, for example, would be located in an enclosed building with large pick-up ducts distributed overhead, especially in the vicinity of the meal loadout duct. The loadout duct itself may be fitted with a plastic- or canvas-type hood that lowers with the duct to the loadout point; the hood would have dust collection ducts. The collecting ducts would be routed to a fabric filter. The successful operation of this control system would depend upon operational practice, e.g., whether or not the doors were closed and the canvas hood lowered. Similar operational considerations apply to railcar and barge loadout points. Illustrative sketches of typical systems can be found in Reference 30. In each case, the control apparatus is a fabric filter.

Beginning with the receipt of cleaned and dryed whole soybeans from storage, particulate sources within a soybean processing plant include cracking and dehulling, hull grinding, soybean conditioning, flaking, meal drying, meal cooling, and bulk loading. (Other potential sources that could be listed separately are cleaning or scalping prior to cracking and meal grinding.) Dust from these sources is collected in a variety of combinations and routed to control devices. A 1972 study of particulate emissions from soybean processing plants[30] estimated that, in a typical plant, about 75 percent of the particulate sources were controlled with cyclones and 25 percent with fabric filters. Further, this study estimated the adequacy of those controls at 6 on a scale in which 0 represents complete inadequacy and 10 represents complete adequacy. Recent plant visits suggest that the use of fabric filters has increased significantly in recent years with an attendant increase in adequacy.

Figure 9.6-8 shows a schematic diagram of a 1,000 ton per day soybean plant that highlights the particulate issue. It includes typical flows through what is asserted to be a "best" control system.[30] With the exception of the wet scrubber on the meal dryer effluent, it is very similar to systems observed in plants recently visited.

Particulate emissions from soybean production are primarily hull and seed dust. The size range and distribution are not known. A range of 2 to 50 micrometers in diameter has been estimated for hull and seed dust emissions of other oil seeds.[31]

Cyclones are used extensively both for product recovery and for controlling emissions in soybean processing. Cyclones are classified as either high efficiency or high throughput (less efficient) units. The less efficient units are less expensive and are used primarily for product recovery. Less efficient units should be followed by high efficiency cyclones or fabric filters for adequate particulate emissions control. A typical efficiency for collecting grain dust is 95 percent for the high throughput units. Modified high efficiency units (e.g., the Aerodyne Type S) has an estimatd collection efficiency for grain dust of 99 percent.[30]

Fabric filters are currently used to control several soybean processing particulate emission sources. The only sources where they are not used are those in which the effluent has a high moisture content--i.e., the bean conditioner, the flaker, and the dryer. Blinding of the fabric occurs when the collected dust is moist, thus reducing the flow of air through the unit. Also, the cleaning mechanisms (shaker, reverse air, pulse jet) generally will not remove wetted particulates from the fabric surface.

Cotton sateen, wool felt, and dacron felt have all been used as filter fabrics for grain industry emission sources. However, dacron felt is the fabric now recommended by essentially all of the filter manufacturers for these sources. Fabric weights of 16 to 22 ounces per square yard are typical.[30]

The air-to-cloth ratio, sometimes referred to as the filter rate, is a key design parameter for fabric filters. Typical values for soybean plants are about 3 meters per minute.

Bag life is on the order of 18 to 36 months and varies with the type of cleaning cycle. A complete cleaning of the bags (i.e., dry cleaning) is

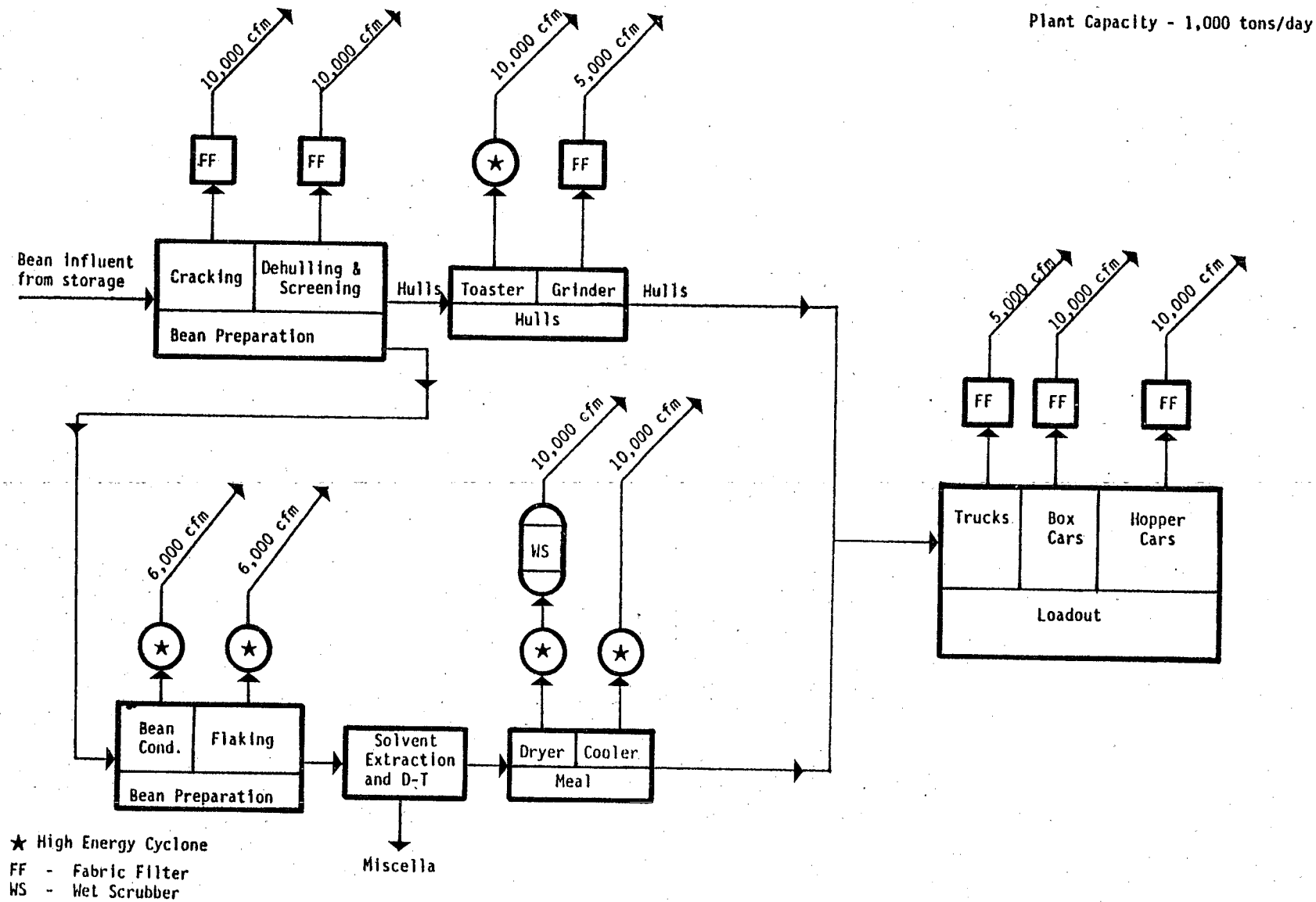

Figure 9.6-8. Schematic of a 1,000 ton per day soybean processing plant.[30]

sometimes required to restore original bag efficiency and operating characteristics. Complete cleaning of the bags would occur about once or twice a year in a plant with a good preventive maintenance program.

Fabric filters, when properly designed and operated, can operate relatively trouble free with efficiencies in excess of 99.9 percent and with no visible emissions.

Although wet scrubbers are applicable to soybean processing sources, they offer limited use and therefore are rarely used. The limited use of wet scrubbers is due to the following reasons:

- The material collected by a wet scrubber is rarely suited for reuse in the process.
- Use of a wet scrubber requires treatment of the scrubbing liquor effluent to prevent water pollution and sanitation problems.
- Particulates are the only emissions of concern from most sources. If a level of control higher than that attainable by a cyclone is required, a fabric filter can usually be used.

For these reasons new installations are using cyclones and fabric filters rather than wet scrubbers, and some processing plants are converting from scrubbers to cyclones and fabric filters.

REFERENCES FOR SECTION 9.6

1. Memo from Noble, E., to files, U.S. Environmental Protection Agency, Office of Air Quality Planning and Standards. November 14, 1980. Draft chapters 3 and 4, prepared for a background information document on the ammonium nitrate industry.

2. Search, W. J., and R. B. Reznik. Source Assessment: Ammonium Nitrate Production. U.S. Environmental Protection Agency. Publication No. EPA-600/2-77-107. September 1977.

3. OAQPS Data File of Nationwide Emissions. U.S. Environmental Protection Agency, Office of Air Quality Planning and Standards. February 1979.

4. Hineman, P. S., and P. Spaun. An Evaluation of Control Needs For The Nitrogen Fertilizer Industry. U.S. Environmental Protection Agency. Publication No. EPA-600/2-79-186. August 1979. EPA-600/2-77-107. September 1977.

5. Ammonium Nitrate Emission Test Report. C. F. Industries. Harrison, TN. U.S. Environmental Protection Agency. EMB Report 79-NHF-10. November 1979.

6. The Fertilizer Institute Environmental Symposium. January 13-16, 1976.

7. Environmental Considerations of Selected Energy Conserving Manufacturing Process Options, Volume XV: Fertilizer Industry Report. U.S. Environmental Protection Agency. Publication No. EPA-600/7-76-034. December 1976.

8. Chemical Economics Handbook, Stanford Research Institute. Menlo Park, CA. December 1976.

9. Ammonium Sulfate Manufacturing Background Information Document for Proposed Emission Standards. U.S. Environmental Protection Agency, Office of Air Quality Planning and Standards. Research Triangle Park, NC. Publication No. EPA-450/3-79-034. December 1979.

10. Chemical Marketing Reporter. Schnell Publishing Co. New York, NY. October 13, 1980.

11. Search, W. J., and R. B. Reznik. Source Assessment Urea Manufacture. U.S. Environmental Protection Agency. Publication No. EPA-600/2-77-107L. November 1977.

12. Memo from Noble, E., to files, U.S. Environmental Protection Agency, Office of Air Quality Planning and Standards. Draft chapters 3 and 4 prepared for a background information document on the urea industry.

13. Atmospheric Modeling Data from National Emission Data System (NEDS). U.S. Environmental Protection Agency, Office of Air Quality Planning and Standards. May 1979.

14. Parker, A. Industrial Air Pollution Handbook. McGraw Hill.

15. Background Information for Standards of Performance: Phosphate Fertilizer Industry, Volume 1: Proposed Standards. U.S. Environmental Protection Agency. Publication No. EPA-450/2-74-019a. October 1974.

16. Standards Support and Environmental Impact Statement, Volume 1: Proposed Standards of Performance for Grain Elevator Industry. U.S. Environmental Protection Agency.

17. Shannon, L. J., et al. Emissions Control in the Grain and Feed Industry: Volume 1--Engineering and Cost Study. U.S. Environmental Protection Agency. Publication No. EPA-450/3-73-003a.

18. Schrag, M. P., et al. Source Test Evaluation for Feed and Grain Industry. U.S. Environmental Protection Agency. Publication No. EPA-450/3-76-043.

19. Annis, J. C., et al. Evaluation of the Liquid Fat Injection Method of Controlling Alfalfa Dehydrator Effluent. Journal of the Air Pollution Control Association. January 1970.

20. Smith, K. D. Particulate Emissions from Alfalfa Dehydrating Plants--Control Costs and Effectiveness. U.S. Environmental Protection Agency. Publication No. EPA-650/2-74-007. January 1974.

21. First, M. W., et al. Control of Odors and Aerosols from Spent Grain Dryers. Journal of the Air Pollution Control Association. 24:7, July 1974.

22. Rawlings, G. D., and R. B. Reznik. Source Assessment: Cotton Gins. U.S. Environmental Protection Agency. Publication No. EPA-600/2-78-004a. January 1978.

23. Feairheller, W. R., and D. L. Harris. Particulate Emission Measurements from Cotton Gins--Plant Tested: J. G. Boswell Company El Rico #9. Corcoran, CA. Monsanto Research Corporation. Report No. 72-MM-19. Submitted November 1974. Undated.

24. Rawlings, G. D., and H.B.M. Cooper. Air Pollution Control at Cottonseed Oil Mills. (Presented at Specialty Conference on Control Technology for Agricultural Air Pollutants. Air Pollution Control Association. March 1974.)

25. Roddy, W. J. Controlling Cotton Gin Emissions. Journal of the Air Pollution Control Association. June 1978.

26. Draft Report, Source Category Survey for the Starch Manufacturing Industry. Energy and Environmental Analysis, Inc. Durham, NC. U.S. Environmental Protection Agency. Contract No. 68-02-3061. April 1980.

27. Storch, H. L. Product Losses Cut With A Centrifugal Gas Scrubber. Chem. Eng. Progr. 62: 51-54. April 1966.

28. Control of Volatile Organic Emissions from Manufacture of Vegetable Oils. U.S. Environmental Protection Agency Guidelines Series. U.S. Environmental Protection Agency, Office of Air Quality Planning and Standards. Research Triangle Park, NC. Publication No. EPA-450/2-78-035. June 1978. p. 2-2.

29. Becker, K. W. Processing of Oilseeds to Meal and Protein Flakes. Journal of the American Oil Chemists' Society. 48:300. June 1971.

30. Shannon, L. J., et al. Emission Control in the Grain and Feed Industry. Volume 1. Engineering and Cost Study. U.S. Environmental Protection Agency. Research Triangle Park, NC. Publication No. EPA-450/3-73-003a. December 1973.

31. Feairheller, W. R., and D. L. Harris. Particulate Emission Measurements from Cotton Gins--Plants Tested. U.S. Environmental Protection Agency. Research Triangle Park, NC. EPA Project Report No. 72-MM-19.

Page Intentionally Blank

9.7 MINERAL PRODUCTS

The conversion of naturally occurring minerals into salable products involves both physical and chemical processes. These processes, if inadequately controlled, can result in the generation and emission of significant quantities of particulate matter. Several unit processes (e.g., mining, crushing, screening, drying, materials handling, and mixing) are common to many mineral production procedures. Mineral ores are usually extracted and processed to some degree (beneficated) before being shipped to another location where further processing occurs or a salable product is manufactured. The mining and benefication of both nonmetallic and metallic minerals and the corresponding emission sources and applicable control technologies are discussed in Sections 9.7.1 and 9.7.2. Processes and applicable control technologies for certain mineral products are discussed in Sections 9.7.3 through 9.7.13; the products discussed are those which are subjected to additional production processes which have a potential for generating and emitting particulate matter.

9.7.1 Nonmetallic Mineral Processing

Crushed stone, sand and gravel, and coal are by far the largest segments of the nonmetallic mineral and processing industry, accounting for an annual U.S. production rate of over 2000 teragrams. Other minerals produced in large quantities are clay, phosphate, slag, rock salt, gypsum, sodium compounds, potash, pumice, borate, and barite. Production rates and other pertinent data are listed in Table 9.7-1.[1,2,3]

Nonmetallic mineral processing involves extracting from the ground, loading, unloading and dumping, conveying, crushing, screening, milling, and classifying. Some mineral processing also includes washing, drying, calcining, or flotation operations. The operations performed depend on the rock type and the desired product. Essentially all mining and mineral processing operations are potential sources of particulate emissions. The 1977 particulate emissions from the mining and processing of a number of nonmetallic minerals are given in Table 9.7-2.[4] The reported quantities include emissions from numerous operations ranging from the mining of the raw materials to the manufacture of a salable product from the listed commodity.

Table 9.7-1. NONMETALLIC MINERALS PRODUCTION STATISTICS[1,2,3]

Mineral	Reported 1975 production level, Gg	Major producing States in order of production	Number of active operations	Annual growth rate, %	Estimated 1985 production level, Gg
Crushed and broken stone	819,020	PA, IL, TX, FL, OH	4800 (quarries)	4.0	1,212,620
Sand and gravel	716,100	AK, CA, MI, IL, TX, OH	5500 (plants)	1.0	790,925
Coal	588,000	KY, WV, PA, IL, OH, VA, IN, WY	5247 (mines)	NA	773,000
Clay	44,490	GA, TX, OH, NC	120	3.5	62,750
Phosphate	44,300	FL, NC, TN, ID, WY, UT, MT	36	4.0	NA
Slag	27,120	PA, OH		2.0	33,060
Rock salt	14,928	TX, NY, LA	21	2.0	16,510
Gypsum	8,845	CA, MI, IA, TX	69 (mines)	2.0	10,780
Sodium compounds[a]	4,530	CA, TX	1	2.5	5,800
Potash[b]	2,270	NM	11	3.0	3,050
Pumice	3,530	OR, CA, AZ, NM	235	3.5	4,980
Asphalt and related bitumens	90	UT	1	2.0[e]	110
Talc	875	VT, TX, CA	52	4.0	1,300
Borate	1,060	CA	6	5.0	1,080
Barite	1,165	NV, MO	31	2.2	1,450
Fluorspar	125	IL	15	3.0	170
Feldspar	610	NC	15	4.0	900
Pyrites[c]	367	TN	3	Neg.	--
Diatomite	520	CA, KS, NV	16	5.5	890
Perlite	640	NM	13	4.0	950
Vermiculite	233	MT, SC	2	4.0	445
Mica	122	NC, NM	17	4.0	180
Kyanite	85[d]	VA, GA	3	6.0	155

[a]Natural soda ash.
[b]Potassium equivalent.
[c]Based on sulfur production by assuming a 40 percent content.
[d]Estimate for 1974.
[e]Assumed.
NA--not available.

Table 9.7-2. 1977 NATIONWIDE PARTICULATE EMISSIONS FROM THE NONMETALLIC MINERALS MINING AND PROCESSING INDUSTRY[4]

Mineral	Emissions, Gg
Sand and gravel	41
Stone and rock crushing	1372
Phosphate rock	
Drying	18
Grinding	24
Material handling	8
Clays	114
Lime	115
Perlite	2
Coal cleaning	
Pneumatic dry	1
Thermal dry	12
Gypsum	70

9.7.1.1 Process Description. Nonmetallic mineral mining includes surface mining, dredging, and underground mining. Surface mining involves removing overburden, recovering the desired mineral, transporting the mineral to the processing operation where the ores or minerals may be beneficated, and reclaiming the mined area. Deposits recovered by this method may be in any rock type and are usually less than 150 meters deep. Some minerals require blasting while others can be removed by bulldozer. Dredging is a type of placer mining (mining of glacial or alluvial deposits containing minerals) that involves the underwater extraction of minerals from placer deposits. Underground mining involves the extraction and removal of a mineral from a natural deposit beneath the earth's surface.

The nonmetallic minerals are normally delivered to the processing plant by truck and dumped into a hoppered feeder (usually a vibrating grizzly type) or onto screens, as illustrated in Figure 9.7-1. The screens are used to separate materials that do not require further crushing from those materials that require processing. Crushing and screening operations are conducted in stages until the materials are of the proper size. At this point, some mineral end products of the desired grade are conveyed directly to finished product bins, or stockpiled in open areas by conveyors or trucks.

Most nonmetallic minerals require additional processing, depending on the rock type and product requirements. Some minerals, especially certain lightweight aggregates, are washed, dried, and sintered or treated prior to primary crushing. Others are dried following secondary crushing or milling. Sand and gravel, crushed and broken stone, and most lightweight aggregates normally are not milled but are screened and shipped to the consumer after secondary or tertiary crushing. Minerals such as talc or barite may require air classification to obtain the required mesh size, and treatment by flotation to obtain the necessary purity and color. Figure 9.7-2 shows a simplified diagram of the typical process steps required for nonmetallic mineral processing. Table 9.7-3 lists the various unit process operations and emissions sources for each industry.[5]

Most mining and mineral processing operations are potential sources of particulate emissions. Two categories of emission sources have been defined: process fugitive emission sources and fugitive dust sources. Process

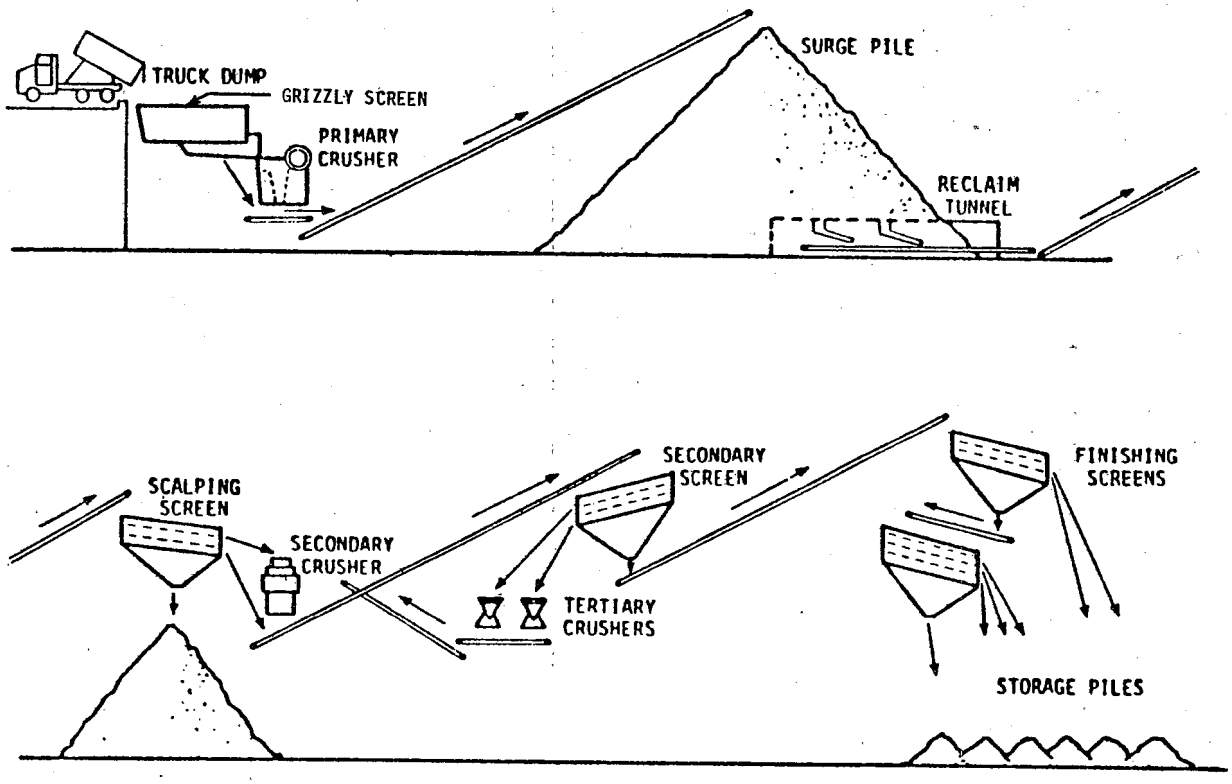

Figure 9.7-1 Flowsheet of a typical crushing plant.[1]

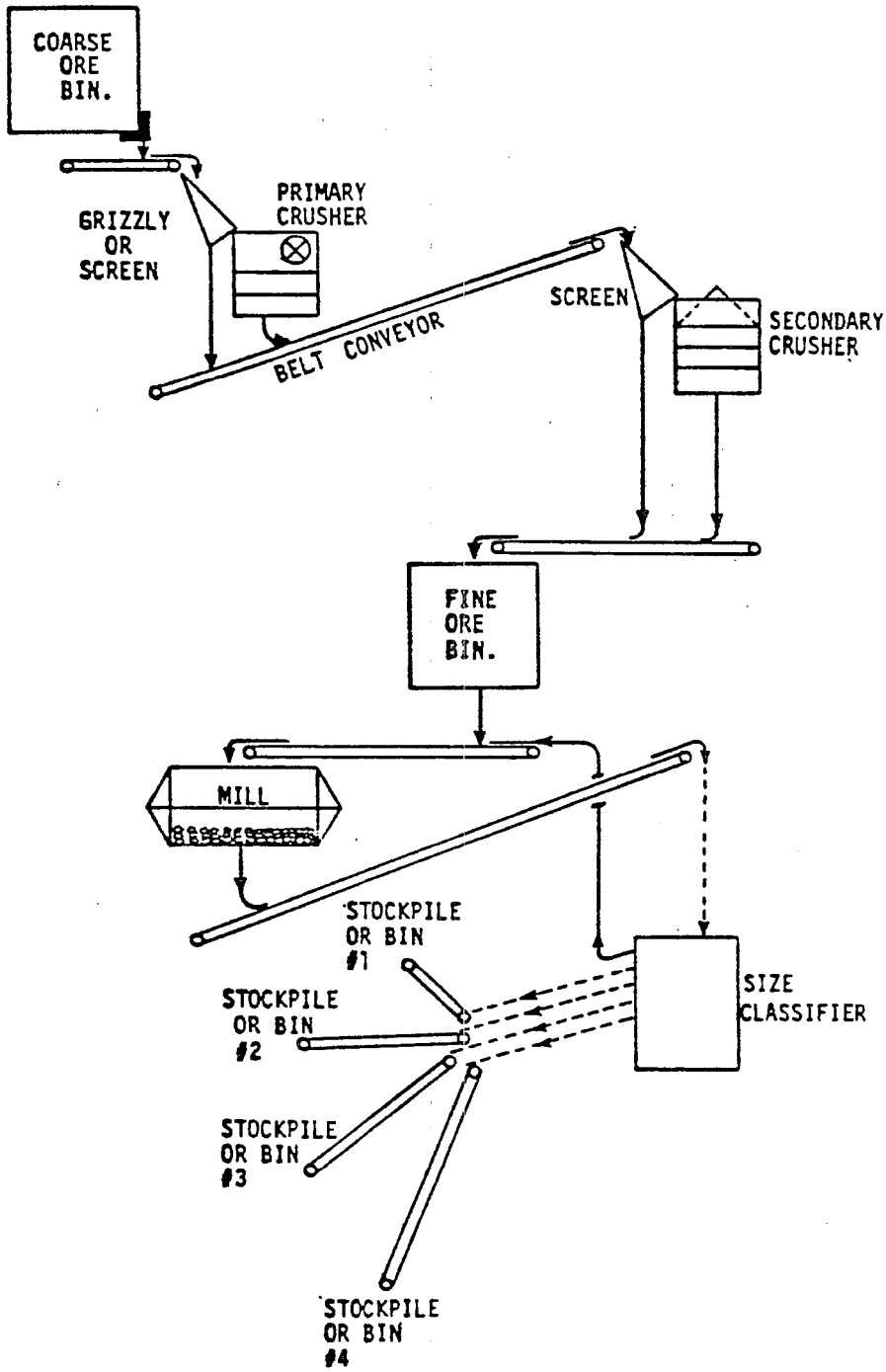

Figure 9.7-2 General schematic for nonmetallic minerals processing.[1]

Table 9.7-3. NONMETALLIC MINERAL UNIT OPERATIONS AND POSSIBLE SOURCES OF EMISSIONS[1,3,5]

Type of plant	Crushers	Screens	Transfer points	Grinders	Loading operation	Bagging operation	Dryers or calciners	Drilling operation
Crushed & broken stone	X	X	X		X			X
Sand & gravel	X	X	X		X			
Coal	X	X	X		X		X	X
Clay	X	X	X	X			X	
Phosphate	X	X	X	X	X	X	X	X
Gypsum	X	X	X	X		X	X	
Pumice	X	X	X	X		X	X	
Feldspar	X	X	X	X			X	
Boron	X	X	X	X	X	X	X	X
Talc	X	X	X	X		X	X	X
Barite	X	X	X	X		X		
Diatomite	X	X	X	X		X	X	
Lightweight aggregate	X	X	X	X	X	X	X	
Rock salt	X	X	X					
Fluorspar	X	X	X	X			X	
Gilsonite	X	X					X	
Sodium compounds	X	X		X				
Mica	X	X		X				
Kyanite	X			X			X	X

fugitive emission sources include any source where emissions can be collected and controlled. Examples include drilling, crushing, screening, grinding, conveyor transfer points, and loading operations. Fugitive dust sources are not amenable to control by conventional systems. Source operations include blasting, hauling, and conveying; source sites include the mine, haul roads, stockpiles, and the plant yard.

The common factors that affect emissions from all mineral processing operations include the type (hardness) of ore processed, the moisture content of the ore, the type of equipment employed, the amount of ore processed, and various geographical and seasonal factors. In conjunction with these common factors, operation-specific factors also affect emissions from each mineral processing or mining operation. In drilling operations, these factors include the type of drill used, the diameter of the hole, and the penetration rate. Emissions from blasting depend on the size of the shot, blasting practices, mineral type, and meteorological conditions (especially wind). During screening operations, the level of uncontrolled dust emissions depends largely on the particle size of the material screened and the amount of mechanically induced energy.[6]

9.7.1.2 Emission Control Techniques. The diverse particulate emission sources in mineral mining and processing operations require the implementation of a variety of control methods and techniques. Dust suppression techniques, designed to prevent particulate matter from becoming airborne, are applicable to both process fugitive emissions and fugitive dust sources. When process fugitive emissions can be contained and captured, collection systems may be used. Emissions sources and applicable control options available in the nonmetallic mineral mining and processing industry are listed in Table 9.7-4.

Methods used to reduce emissions include wet dust suppression, dry collection and a combination of the two. Wet dust suppression systems control dust by applying moisture in the form of water or water plus a wetting agent sprayed at critical dust producing points in the process flow. This method is designed to prevent particulate matter from becoming airborne. The method is used extensively to control emissions from fugitive dust sources, but it is also used for fugitive process emissions.

Table 9.7-4. PARTICULATE EMISSION SOURCES FOR THE EXTRACTION AND PROCESSING OF NONMETALLIC MINERALS[1]

Operation or source[a]	Control options
Drilling	Liquid injection (water or water plus a wetting agent) Capturing and venting emissions to a control device
Blasting	Adopt good blasting practices
Loading (at mine)	Water wetting
Hauling	Water wetting of haulage roads Treatment of haulage roads with surface agents Soil stabilization Paving Traffic control
Crushing	Wet dust suppression systems Capturing and venting emissions to a control device
Screening	Same as crushing
Conveying (transfer points)	Same as crushing
Stockpiling	Stone ladders Stacker conveyors Water sprays at conveyor discharge Pugmill
Grinding	Same as crushing
Storage bins	Capturing and venting to a control device
Conveying (other than transfer points)	Covering Wet dust suppression
Windblown dust from stockpiles	Water wetting Surface active agents Covering (i.e., silos, bins) Windbreaks
Windblown dust from roads and plant yard	Water wetting Oiling Surface active agents Soil stabilization Paving Sweeping
Loading (product into RR cars, trucks, ships)	Wetting Capturing and venting to control device
Bagging	Capturing and venting to control device
Magnetic separation	Capturing and Venting to control device

[a]Does not include processes involving combustion.

9.7.1.2.1 Wet dust suppression. The wet dust suppression method has been used on a wide variety of stone including limestone, traprock, granite, shale, dolomite, and sand and gravel. Water sprays are not practical in all cases because moisture may interfere with further processing such as screening or grinding, where agglomeration cannot be tolerated. The capacity of dryers used in some processing steps may limit the amount of water that can be sprayed onto the raw materials.

A typical wet suppression system utilizes several points within the process flow scheme when the suppressant material is applied. These points may be at the primary crusher truck dump, at the discharge of the primary crusher, at secondary and tertiary crushers, at feeders located under surge or reclaim piles, at screens, at conveyor transfer points, and at conveyor screen discharges to bins and storage piles. If properly conditioned at the initial processing steps, continued application of the wetting agent can be minimized. The wetted material should exhibit some carry-over dust control effect that will last through a number of material handling stages.

In order to enhance the effectiveness of the wet suppression technique, wetting agents are added to the water to lower its surface tension and consequently improve its wetting efficiency. These chemical wetting agents have the following advantages:

- Lower cost because of less frequent application.
- Better wetting of fine particles and longer retention of the moisture film.
- Flexibility of application, since the agents can be applied directly to the surface being controlled or worked into the material being treated.
- Greater reduction of particulate emissions from fugitive sources --up to 90 percent efficiency versus 50 percent efficiency with untreated water.[6]

Due to the unconfined nature of emissions from facilities controlled by the wet suppression technique, the quantitative measurement of mass particulate emissions is not possible. Thus, no mass emission data are available which permit a quantitative comparison of the control capabilities of wet dust suppression versus dry collection techniques. Visible emission observations were conducted by EPA at six crushed stone, and sand and gravel

facilities (which EPA designated F, P, Q, R, S, T); EPA used wet dust suppression techniques to control particulate emissions generated at these plant process facilities. Emissions generated by 13 crushers, 14 screens, 7 transfer points, 1 impact mill and 1 storage bin were visually measured by EPA Methods 9 and 22. Facilities R and T are portable crushing facilities. Facilities P, Q, R, and T process crushed limestone, while facility F processes crushed traprock, and facility S produces crushed granite.

The results of the tests for non-crushing sources (e.g., screens, transfer points, and storage bins) are summarized in Table 9.7-5. These results indicate that visible emissions occur less than 10 percent of the time. The results of the tests for crushing sources from the best controlled stationary (facility S) and portable (facility R) plants are summarized in Figures 9.7-3 to 9.7-7. The data are reported in 6-minute averaging of Method 9 data. For each testing set (approximately 1 hour), the results of the two observers simultaneously measuring visible emissions are indicated by a solid and a dashed line. Even though facility R is designated the best controlled portable crushing plant, the secondary crusher exceeded 15 percent opacity several times, according to one observer. This is attributed to the fact that during the test, there was no spray bar located near the crusher outlet. Had the spray bar for the crusher been relocated closer to the crusher than its present position some 5 feet from the crusher, emissions might have dropped below 15 percent opacity for all observer readings.

In general, the positioning and number of spray bars at all plants except facilities F and S were judged to be inadequate. Even though all the facilities tested were reasonably controlled, they might have achieved the low level of emissions seen at facilities F and S with more careful placement of the bars, and in some cases, additional spray bars.

9.7.1.2.2 Dry collection. Particulate emissions from process operations (such as dust from crushing, screening equipment, and transfer points) may be controlled by capturing and ducting the emissions to a collection device. Collection systems consist of an exhaust system utilizing hoods to capture emissions, fan and ducting to convey the emissions to a collection device, and the collection device to remove the particulate emissions prior to exhausting the air stream. Collection devices include fabric filters, cyclones, and low-energy scrubbers.

TABLE 9.7-5. SUMMARY OF VISIBLE EMISSION MEASUREMENTS FROM FUGITIVE NONCRUSHING SOURCES CONTROLLED BY WET SUPPRESSION (ACCORDING TO EPA METHOD 22)[1]

Plant	Rock type processed	Date of test	Process facility	Accumulated observation time, minutes	Accumulated emission time, minutes[a]	Percent of time with visible emissions
P	Crushed limestone (S)[b]	10/02/79	Secondary screen	60	0	0
			Transfer point	60	< 1	1
Q	Crushed limestone (S)	10/10/79	Three process screens	270	2	< 1
R	Crushed limestone (P)[c]	10/15/79	Three process screens	210	11	5
			Two transfer points	120	1	< 1
S	Crushed granite (S)	10/23/79	Two process screens	240	10	4
			Two transfer points	240	< 1	0
T	Crushed limestone (P)	10/29/79	Process screen	120	0	0
			Transfer point	120	3	2
			Storage bin	120	0	0

[a]Data from observer with highest readings.
[b](S) = Stationary plant.
[c](P) = Portable plant.

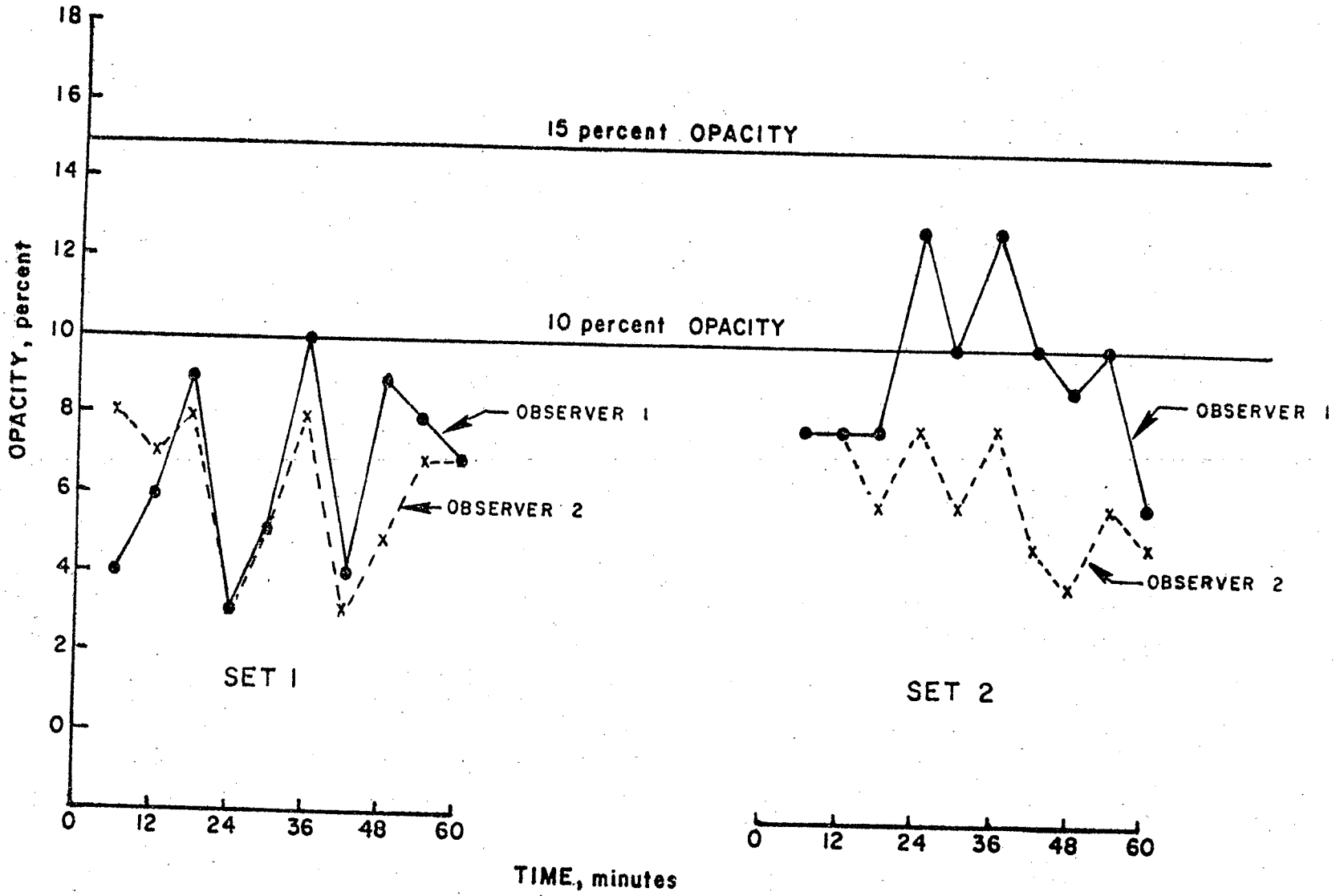

Figure 9.7-3. Summary of visible emission measurements from best controlled fugitive primary crushing source (portable-facility T) by means of wet suppression (according to EPA Method 9).[1]

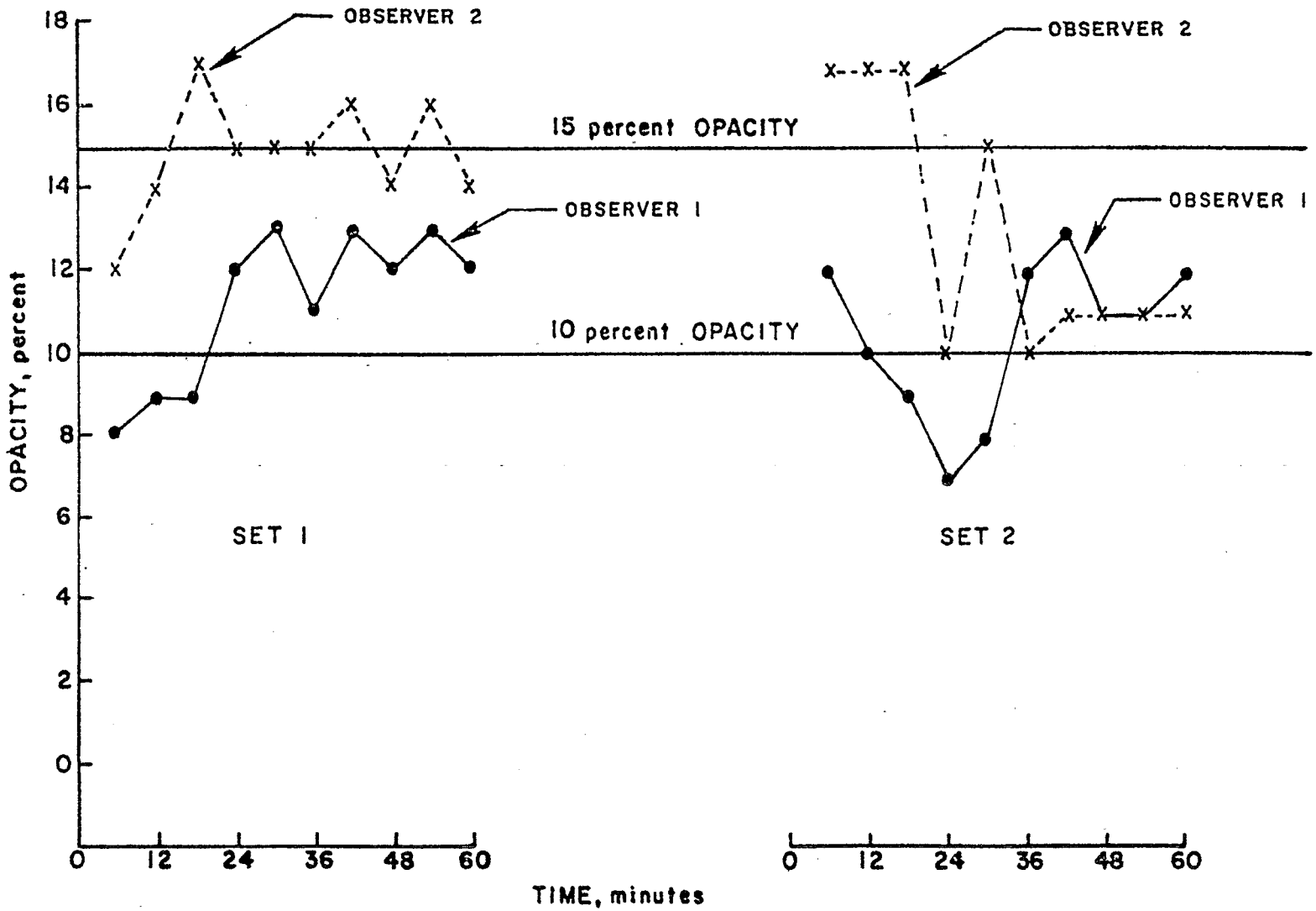

Figure 9.7-4 Summary of visible emission measurements from best controlled fugitive secondary crushing source (portable-facility R) by means of wet supression (according to EPA Method 9).[1]

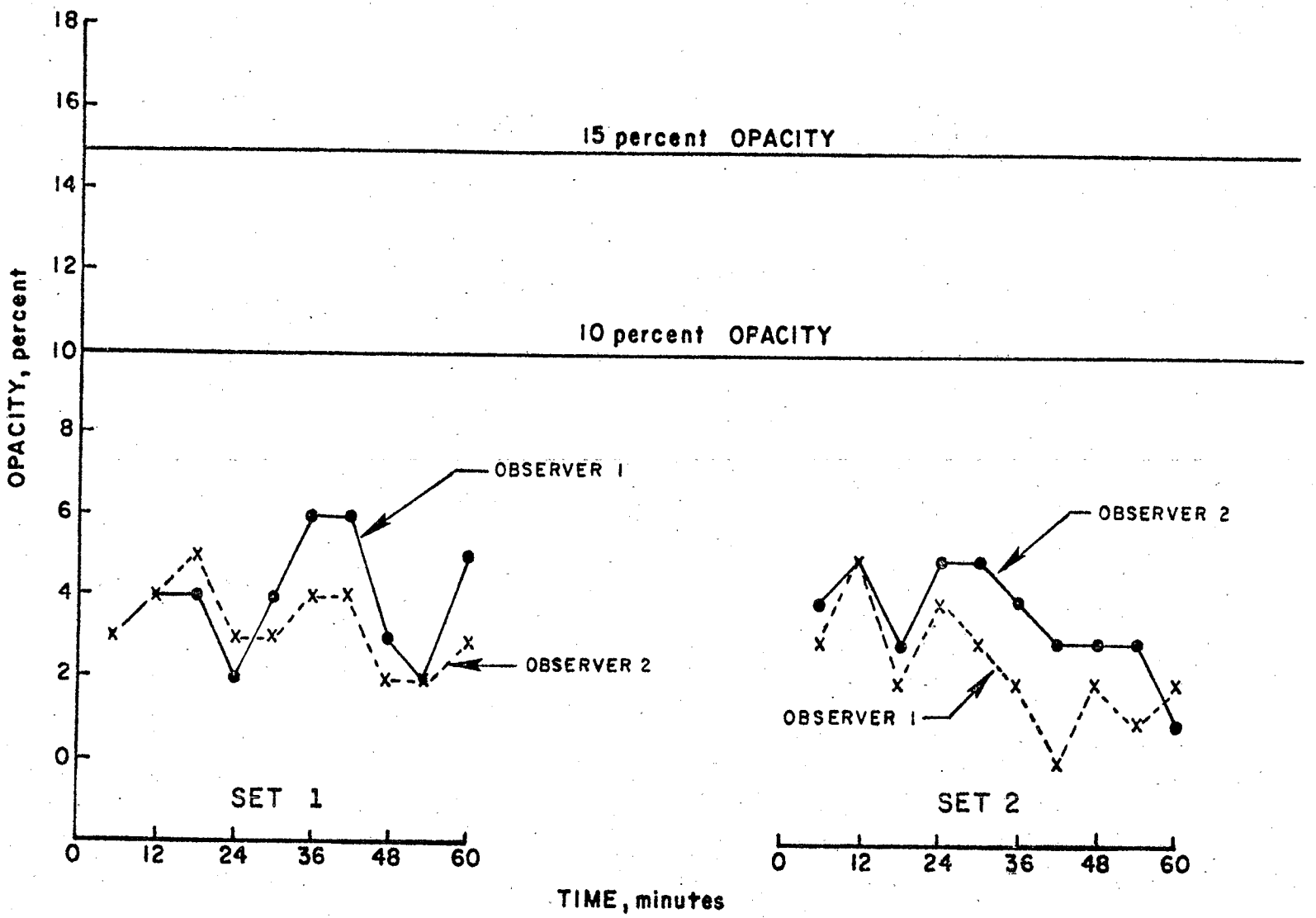

Figure 9.7-5 Summary of visible emission measurements from best controlled fugitive secondary crusher (small, stationary-facility S) by means of wet supression (according to EPA Method 9).[1]

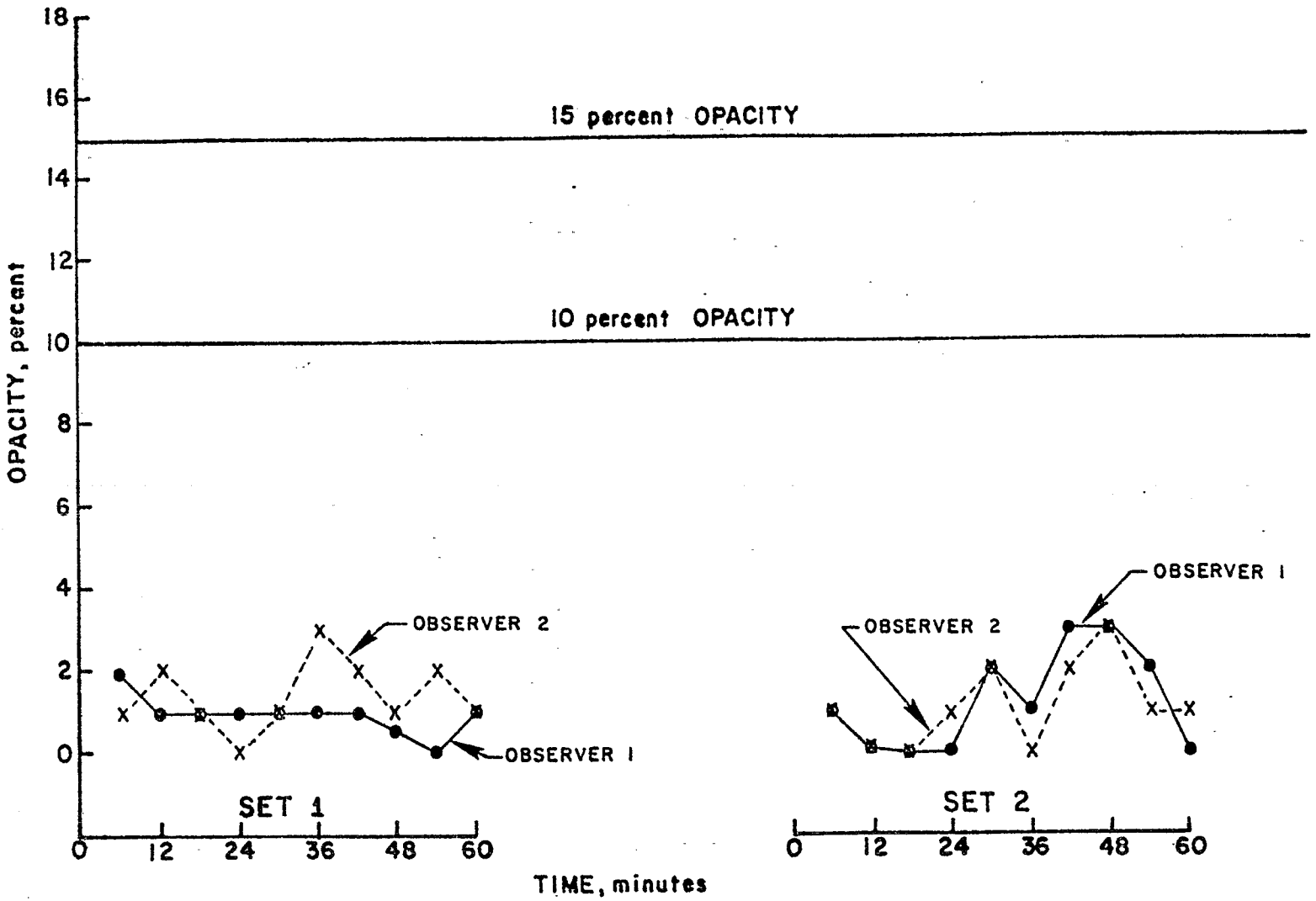

Figure 9.7-6 Summary of visible emission measurements from best controlled fugitive primary crushing source (stationary-facility S) by means of wet supression (according to EPA Method 9).[1]

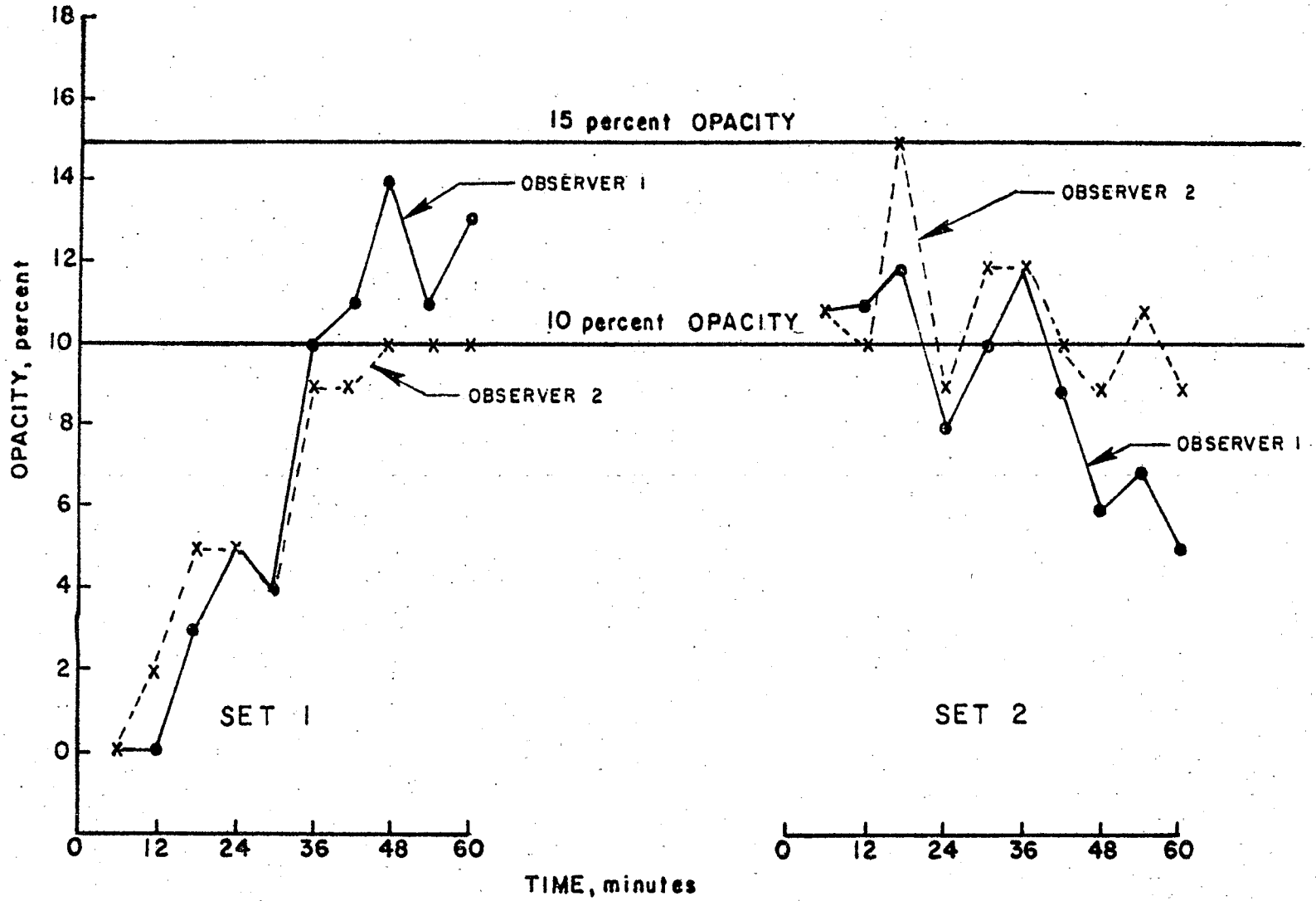

Figure 9.7-7 Summary of visible emission measurements from best controlled fugitive secondary crushing source (large, secondary-facility S) by means of wet supression (according to EPA Method 9).[1]

To maximize collection system efficiency, exhaust systems must be properly designed and balanced. Process equipment should be enclosed as completely as possible, allowing access for operation and maintenance. Indraft velocities should be maintained at a minimum of 61 meters per minute.[1] Proper hood design will minimize the effects of cross drafts and reduce power consumption by minimizing exhaust volumes. Ducting must be designed for adequate conveying velocities to prevent settling of dust particles. Based on data for the crushed stone industry, conveying velocities recommended for mineral particles range from 1100 to 1400 meters/min.[7] For proper dust control from process sources, hoods should be installed at conveyor transfer points, screens, crushers, grinders, and bagging operations. Hood configurations and exhaust rates are discussed in Reference 1.

Fabric filters are generally the most effective dust collection devices used in the mineral mining and processing industry. In most crushing plant applications, mechanical shaker type collectors which require periodic shutdown for cleaning (usually after 4 to 5 hours of operation) are used. Collector bags are made of cotton sateen and operated at a filtering velocity of 0.6 to 0.9 m/min. When it is impractical to turn off the collector for cleaning, fabric filters with continuous cleaning are used. Fabric filters, using wool or synthetic felts as filtering media, provide continuous cleaning and may be operated at a filtering velocity of 1.8 to 3.0 m/min. Table 9.7-6 gives standard air-to-cloth ratios suggested for the collection of different material dusts. Efficiencies for well maintained baghouses, regardless of type (jet pulse or mechanical shaker), are greater than 99 percent, even on submicrometer particle sizes.[7]

Particulate emission measurements were conducted by EPA on 16 baghouse collectors used to control emissions generated at crushing, screening, and conveying (transfer points) operations at five crushed stone installations, one kaolin plant, one fuller's earth installation, and on one baghouse collector used to control emissions generated at grinding, classifying, and fine product loading operations at a feldspar installation. Table 9.7-7 briefly summarizes the process operations controlled by each baghouse tested, along with specifications for each baghouse. The results of these measurements are summarized in Figure 9.7-8.

Table 9.7-6. AIR-TO-CLOTH RATIOS FOR FABRIC FILTERS USED FOR EXHAUST EMISSION CONTROL[1]

Industrial segment	Filtering velocity,[a] meters/min
Sand and gravel	2.1
Clay	1.8
Gypsum	1.8
Lightweight aggregate (Perlite and Vermiculite)	2.3
Pumice	1.4
Feldspar	1.2
Borate	1.5
Talc and soapstone	1.5
Barite	1.4
Diatomite	1.2
Rock salt	1.5
Fluorspar	1.5
Mica	1.8
Kyanite	1.8
Sodium compounds	1.4
Gilsonite	N.R.[b]
Crushed and broken stone	7.0

[a]Ratio is based on operating surface required to obtain a particulate concentration of 0.05 g/m^3 in the outlet stream from the filter. In all cases, the filter is a pulse-jet type operating at 1.5 kPa w.c. differential pressure. The filtering medium is felted polypropylene or polyester.

[b]No recommendation for this segment.

TABLE 9.7-7. BAGHOUSE UNITS TESTED BY EPA[1]

Facility	Rock type processed	Baghouse specifications				Process operations controlled
		Type	Filtering ratio	Capacity		
				scms	scfm	
A1	Limestone	Jet pulse	5.3 to 1	12.5	(26,472)	Primary impact crusher
A2	Limestone	Jet pulse	7.0 to 1	7.5	(15,811)	Primary screen
A3	Limestone	Jet pulse	7.0 to 1	1.1	(2,346)	Conveyor transfer point
A4	Limestone	Jet pulse	5.2 to 1	5.0	(10,532)	Secondary cone crusher, screen
B1	Limestone	Shaker	3.1 to 1	2.7	(5,784)	Primary impact crusher
B2	Limestone	Shaker	2.1 to 1	8.6	(18,197)	Scalping screen, secondary cone crusher, two finishing screens, hammer mill, five storage bins, six conveyor transfer points
C1	Limestone	Shaker	2.3 to 1	3.5	(7,473)	Primary jaw crusher, scalping screen, hammer mill
C2	Limestone	Shaker	2.0 to 1	3.1	(6,543)	Two finishing screens, two conveyor transfer points
D1	Traprock	Shaker	2.8 to 1	15.0	(31,863)	One scalping and two sizing screens, secondary cone crusher, two tertiary cone crushers, several conveyor transfer points
D2	Traprock	Shaker	2.8 to 1	12.3	(25,960)	Finishing screen, several conveyor transfer points
E1	Traprock	Jet pulse	5.2 to 1	7.0	(14,748)	Two sizing screens, four tertiary cone crushers, several conveyor transfer points
E2	Traprock	Jet Pulse	7.5 to 1	10.0	(21,122)	Five finisheing screens, eight storage bins
M1	Fuller's earth	Reverse air	6.0 to 1	0.9	(1,800)	Raymond mill system
M2	Fuller's earth	Reverse air	5.2 to 1	1.6	(3,300)	Fluid energy system
G1	Feldspar	Reverse air	3.0 to 1	1.9	(3,960)	Pebble mill, bucket elevator, two conveyor transfer points, fine product loading
L1	Kaolin	Unknown	Unknown	6.6	(14,040)	Raymond impact mill
L2	Kaolin	Unknown	Unknown	3.3	(6,960)	Roller mill

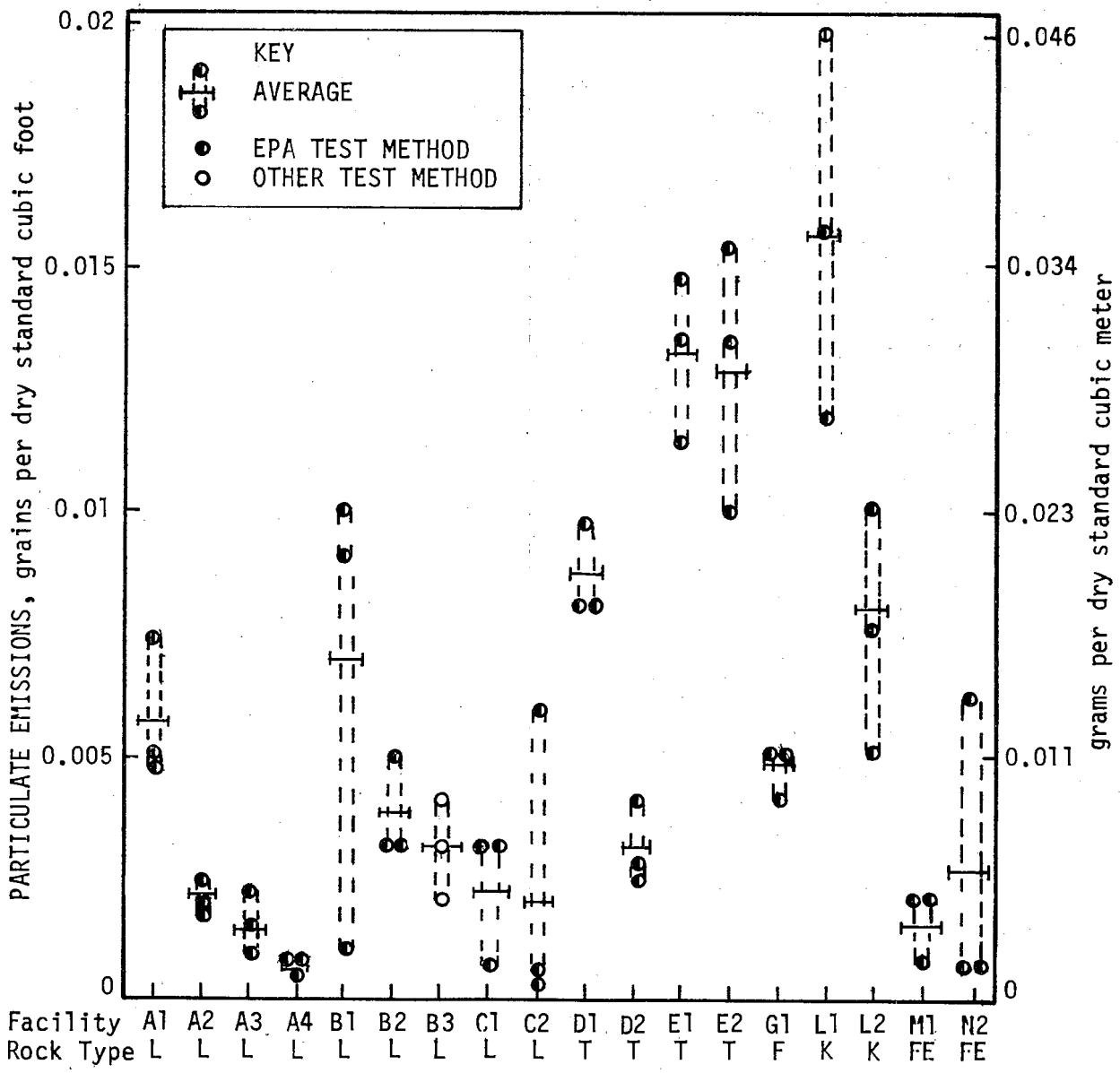

Figure 9.7-8 Particulate emissions from non-metallic minerals processing operations.[1]

Observations for visible emissions were also made at hoods and enclosures to record the presence and opacity of emissions escaping capture. The results of these measurements are summarized in Table 9.7-8. In most instances, essentially no visible emission were observed at adequately hooded or enclosed process facilities.

The other collection devices used in the industry, cyclones and low-energy scrubbers, have efficiencies of 95 to 99 percent for coarse particles (greater than 40 micrometers). These efficiencies, however, drop to less than 85 percent for particles under 20 micrometers in size.[1]

Wet dust suppression and dry collection techniques are often used in combination to control particulate emissions. A typical control method combines wet dust suppression at primary crushers, screens, transfer points, and crusher inlets, with dry collection at the discharge of secondary and tertiary crushers, where new dry surfaces and fine particles are formed. A specific combined method controls fugitive dust from abandoned tailing dumps by using combinations of water, chemical stabilizers, and vegetative cover. Efficiency is reported at 90 to 95 percent.[6] For drilling operations, water injection or aspiration connected to a control device such as a cyclone or fabric filter, preceded by a settling chamber, is common.[8]

For crushing, screening, and transfer operations, controls include the use of wetting agents and fine water sprays at critical transfer and unloading points.

9.7.1.3 Secondary Environmental Impact. The utilization of dry collection techniques (particulate capture combined with a dry emission control device) for control generates no water effluent discharge. In cases where wet dust suppression techniques could be used, the water is absorbed by the material processed. Thus, wet suppression systems do not result in a water discharge.[9]

The impact of solid waste upon the environment depends on the type of control used. With the use of fabric filters, approximately 1.4 Mg of solid waste is collected per 250 Mg of mineral processed. Often this material can be recycled back into the process, sold, or used for a variety of purposes.[1] If no market exists for the collected wastes, they are often discharged to the tailings pond or disposed of in the mine or an isolated location in the

TABLE 9.7-8. SUMMARY OF VISIBLE EMISSION MEASUREMENTS FROM FUGITIVE SOURCES AT NON-METALLIC MINERAL PLANTS[1]

Plant	Rock type processed	Date of test	Process facility	Accumulated observation time, minutes	Accumulated emission time, minutes	Percent of time with visible emissions
A	Crushed limestone	7/9/75	Baghouse discharge to conveyor	240	0	0
			Primary impact crusher discharge	240	4	1
			Conveyor transfer point	166	3	2
B	Crushed limestone	7/1/75	Scalping screen	287	45	15
			Surge bin	287	3	1
			Secondary cone crusher No. 1	231	23	10
			Secondary cone crusher No. 2	231	0	0
			Secondary cone crusher No. 3	231	0	0
			Hammer mill	287	0	0
			3-deck finishing screen (L)	107	4	4
			3-deck finishing screen (R)	107	0	0
		6/30/75	Two 3-deck finishing screens	120	86	72
D	Crushed stone	7/8/75	No. 1 tertiary gyrasphere cone crusher	170	0	0
			No. 2 tertiary gyrasphere cone crusher	170	0	0
			Secondary standard cone crusher	170	0	0
			Scalping screen	210	0	0
			Secondary (2-deck) sizing screen	210	0	0
			Secondary (3-deck) sizing screen	210	0	0
F	Traprock	8/26/76	Two tertiary crushers	65	0	0
			Four processing screens	180	0	0
			Conveyor transfer points	179	0	0

(continued)

TABLE 9.7-8. (concluded)

Plant	Rock type processed	Date of test	Process facility	Accumulated observation time, minutes	Accumulated emission time, minutes	Percent of time with visible emissions
G	Feldspar	9/27/76	Conveyor transfer point No. 1	80	0	0
			Conveyor transfer point No. 2	87	0	0
			Primary crusher	60	1	2
			Secondary crusher	60	0	0
			Conveyor transfer point No. 4	84	0	0
			Ball mill (feed end)	60	0	0
			Ball mill (discharge end)	60	0	0
			Indoor transfer point No. 1	60	0	0
			Indoor transfer point No. 2	60	0	0
			Indoor bucket elevator	60	0	0
			Truck loading	13	0	0
			Rail car loading	32	5	15
H	Gypsum	10/27/76	Hammer mill	298	2	1
I	Mica	9/30/76	Bagging operation	60	0	0
J	Talc	10/21/76	Vertical mill	90	0	0
			Primary crusher	90	20	22
			Secondary crusher	150	4	3
			Bagger	150	13	9
			Pebble mill	90	6	7
N	Kaolin	12/7/78	Rail car loading			
			Test 1	144	17	12
			Test 2	99	2	2
			Test 3	154	9	6

quarry. The amount of solid waste produced from a typical crushing plant (544 Mg/h) is about 28 Mg over an 8-hour period. This waste represents less than 0.7 percent of the plant throughput and does not create a significant solid waste disposal problem.[1]

The implementation of emission control measures in the nonmetallic mineral mining and processing industry results in an increase in energy usage. The energy requirements both with and without air pollution controls for six typical plant sizes are shown in Tables 9.7-9 and 9.7-10. (See Reference 1 for additional details and assumptions.)

9.7.2 Metallic Minerals Mining and Processing

The metallic mineral mining and processing industry involves the mining and processing of ores containing metals such as iron, aluminum, copper, lead, zinc, silver and gold. This industry is highly diversified, employing a variety of extraction, benefication, and emission control techniques. The principal extraction methods include underground mining, surface mining, and dredging. Major emission sources at the mine site include haul roads and the drilling and blasting operations. Benefication processes involve the crushing, classification, concentration, and drying of the metallic ores to enhance their usefulness. Air pollution emissions in the mineral mining industry consist primarily of particulate matter emitted from the above processes.

Emissions may be characterized as process, process fugitive, or fugitive dust. (See Table 9.7-11 for the type of emissions generated by ore processing operations.) Process emissions are point source emissions generated by a process operation; they are normally captured and ducted to the atmosphere as part of the process. Process fugitive emissions are also point source emissions generated by a process operation; however, they are normally not captured and ducted to the atmosphere as part of the process. Fugitive dust emissions are non-process emissions usually generated by wind action or the passing of vehicles; they are emitted from non-point sources. Control techniques for these emissions are shown in Table 9.7-12.

Factors that affect emissions from most mineral operations include the hardness of the ore processed, the type of equipment and operating practices

Table 9.7-9. ENERGY REQUIREMENTS FOR MODEL NONMETALLIC MINERALS PLANTS HAVING CRUSHING AND GRINDING OPERATIONS[1]
(kilowatts)

Plant size, Mg/hr	Uncontrolled	Fabric filter controlled	Percent energy increase, %
9	187	216	16.0
23	410	445	8.4
68	895	953	6.5
136	1567	1649	5.2
272	3134	3289	4.9
544	6342	6626	4.5

Table 9.7-10. ENERGY REQUIREMENTS FOR MODEL NONMETALLIC MINERALS PLANTS HAVING CRUSHING OPERATIONS ONLY[1]
(kilowatts)

Plant size, Mg/hr	Uncontrolled	Fabric filter controlled	Percent energy increase, %
9	48	69	43.8
23	150	174	16.0
68	300	345	15.0
136	375	435	16.0
272	750	856	14.4
544	1570	1761	12.4

Table 9.7-11. TYPES OF EMISSIONS GENERATED BY METAL ORE PROCESSING OPERATIONS

Process operation	Emission type
Drying	
Pelletizing	Process
Calcining	
Crushing	
Screening	
Conveying (transfer points)	Process fugitive
Storage in bins	
Dry grinding	
Product loading	
Wind action on the following:	
Haul roads	
Stockpiles	Fugitive dust
Wastepiles	
Tailings pond beach and dam areas	

Table 9.7-12. METHODS OF PARTICULATE EMISSION CONTROL USED AT METALLIC MINERAL PROCESSING PLANTS

Emission category	Source	Method of control								
		Dust collection								
		Dry cyclone	Wet scrubber	Baghouse	ESP[a]	Enclosure	Water wetting	Water wetting plus surfactant	Soil stabilizer	Paving
Process fugitive	Crushers	X	X	X		X				
	Screens	X	X	X		X				
	Conveyor belt transfer points	X	X	X		X				
	Storage bins	X	X	X		X				
	Dry grinders	X	X	X		X				
	Product packaging	X	X	X		X				
	Product loading		X	X		X	X			
Process	Dryers	X	X	X	X					
	Calciners	X			X					
	Pelletizers	X	X	X	X					
Fugitive dust	Stockpiles					X	X	X	X	
	Wastepiles						X	X	X	
	Haul roads						X	X	X	X
	Tailings pond beach and dam areas						X	X	X	

[a]Electrostatic Precipitator.

employed, the moisture content of the ore, the amount of ore processed, and a variety of geographical and seasonal factors. Dust suppression techniques for preventing particulate matter from becoming airborne are used to control both fugitive dust and process fugitive point sources. Collection systems are used to control point sources where particulate emissions can be contained, captured, and removed from exhaust streams.

Table 9.7-13 presents industry characteristics for each of the metals considered. Ore production in a given year depends primarily on current market value for the particular metal. Production at a specific mine, however, depends on the cost/benefit ratio which depends on such factors as location and extent of the ore body (i.e., surface or underground), metallurgical complexities of extraction process, distance to the market, and costs of environmental compliance. Copper ore is by far the largest quantity produced; iron ore and titanium/zirconium sandtype are second and third, respectively. These ores alone represent 85 percent of the total.[10]

9.7.2.1 Process Description. Figure 9.7-9 displays the three phases of metallic mineral mining and processing. Phase II, the extraction process, and Phase III, ore processing or benefication, are described below. Particulate emissions from these processes are also cited.

9.7.2.1.1 Extraction processes. Drilling, blasting, ore loading, and ore transporting are common to all mining procedures (i.e., underground and surface mining, dredging). Drilling consists of boring blast holes into the mineral deposits. The holes are subsequently charged with explosives and detonated. Blasting is used to displace minerals from their deposits and to fragment them into sizes that require a minimum of secondary breakage and allow ease of handling and loading. The excavation and loading of broken minerals is normally performed by shovels and front end loaders.

At underground mines, crude ore is transported to the surface in buckets, trucks, conveyers, or cars called "skips." Ore is transported to the skip by conveyors or hauling vehicles. At many surface mines, large haulage vehicles with a capacity of 18 to 68 megagrams are used to transport minerals from the mine to the primary crusher.[10,11]

In general, a surface mine operation includes removing the overburden material that covers the deposit, removing the mineral being recovered,

TABLE 9.7-13. METALLIC MINERALS PROCESSING INDUSTRY CHARACTERISTICS[10,11]

Metal	Major processing States	Number of active operations	Production, MT
Aluminum	AL, AR, TX, LA	9	2,013[a]
Antimony	ID, MT	2	1,096[a]
Beryllium	UT	1	--[b]
Copper	AZ, MT, NM, UT	34	1,364[a]
Gold	AZ, NV, SD, UT	17	34.2[a]
Iron	MI, MN	31	56.7[a]
Lead/Zinc	CO, ID, MO UT	35	537[a]
Molybdenum	CO, NM	3	55.5[a]
Nickel	OR	1	13,016[a]
Silver	CO, ID	9	1,228
Titanium/Zirconium	FL, NJ	5	--[b]
Tungsten	CA, NV	4	2.73[a]
Uranium	CO, NM, WY	30	8,344[c]
Vanadium	AK, CO, ID	3	4.72[a]
Zinc	ID, MO, NJ	35	408[a]

[a]Mine production 1977.
[b]Confidential.
[c]Mine production 1976.

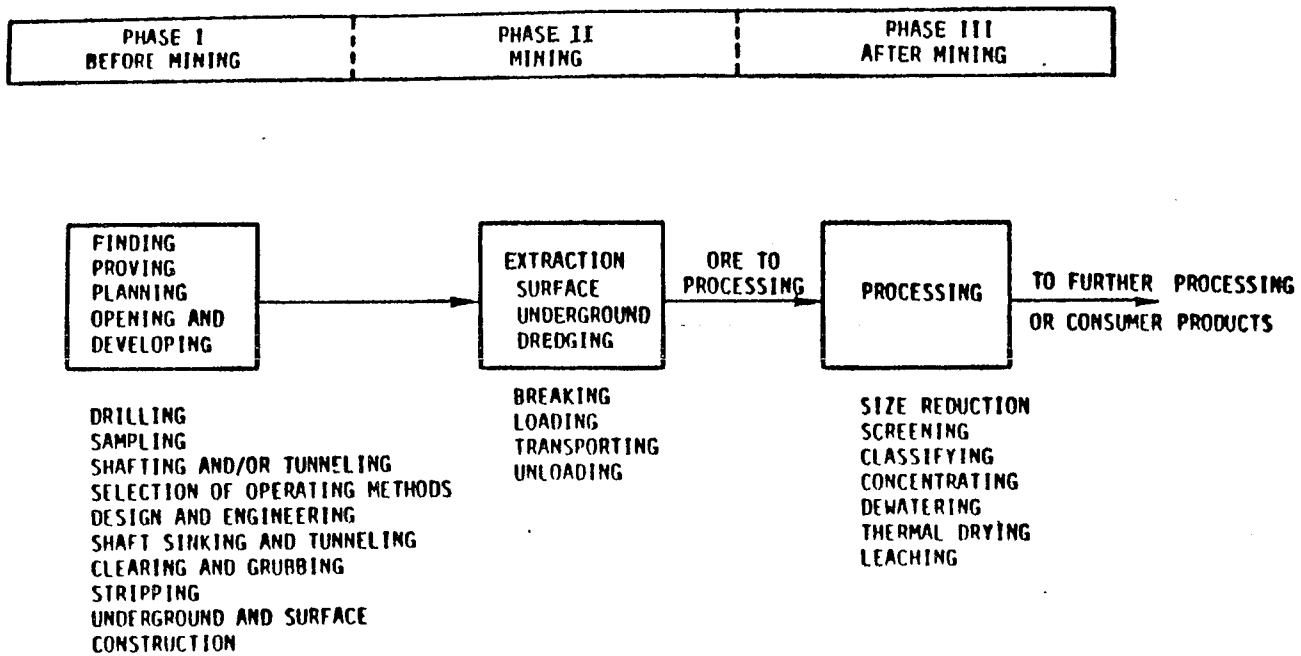

Figure 9.7-9 Scope of mining activities.[2]

transporting the mineral to the benefication processing operations and reclaiming the disturbed area. Dredging is a type of placer mining (a subcategory of surface mining) that involves the underwater extraction of minerals from placer deposits (alluvial or glacial deposits of sand and gravel containing particles of valuable minerals). The deposits dredged are usually low-grade and lie near the surface.[10,11] The major particulate pollutant in these operations is fugitive dust emissions. Drilling, blasting, loading, hauling, dumping, storage piles, waste piles, overburden removal, wind erosion of unprotected surfaces, and land reclamation activities all contribute to fugitive dust and process fugitive emissions.

Particulate emissions from drilling operations are caused primarily by air flushing the bottom of the hole to remove cuttings and dust. Factors affecting emissions from blasting include the size of the shot, blasting procedures, rock type, and meteorological conditions. Considerable fugitive dust emissions may result from loading, hauling, and dumping operations. The most significant factor affecting emissions during loading is the wetness of the ore. Factors affecting emissions from hauling operations are type of road surface, wetness of the surface, volume and speed of vehicle traffic, and vehicle characteristics. Storage piles are another major source of fugitive dust. The emissions from waste and tailing piles are similar in mineral identity to those from primary storage piles, but because the particles are finer, they travel further.

9.7.2.1.2 Metallic mineral preparation processes (beneficiation). A mineral deposit commonly contains many distinct mineral phases which are closely interlocked to form the ore. Thus, mineral processing begins by freeing the desired mineral from the undesired gangue by pulverizing and concentrating it. A schematic diagram of mineral processing is shown in Figure 9.7-10. Figure 9.7-11 displays a process flow diagram for the beneficiation process.

An open or closed circuit may be used in ore treatment. Open circuits use screens to divert finer ores to subsequent stages rather than passing all of the ore through one crusher. This practice lessens the mechanical burden on a piece of equipment, improves operating efficiency, and lowers maintenance requirements. Closed circuit design, which is still used in

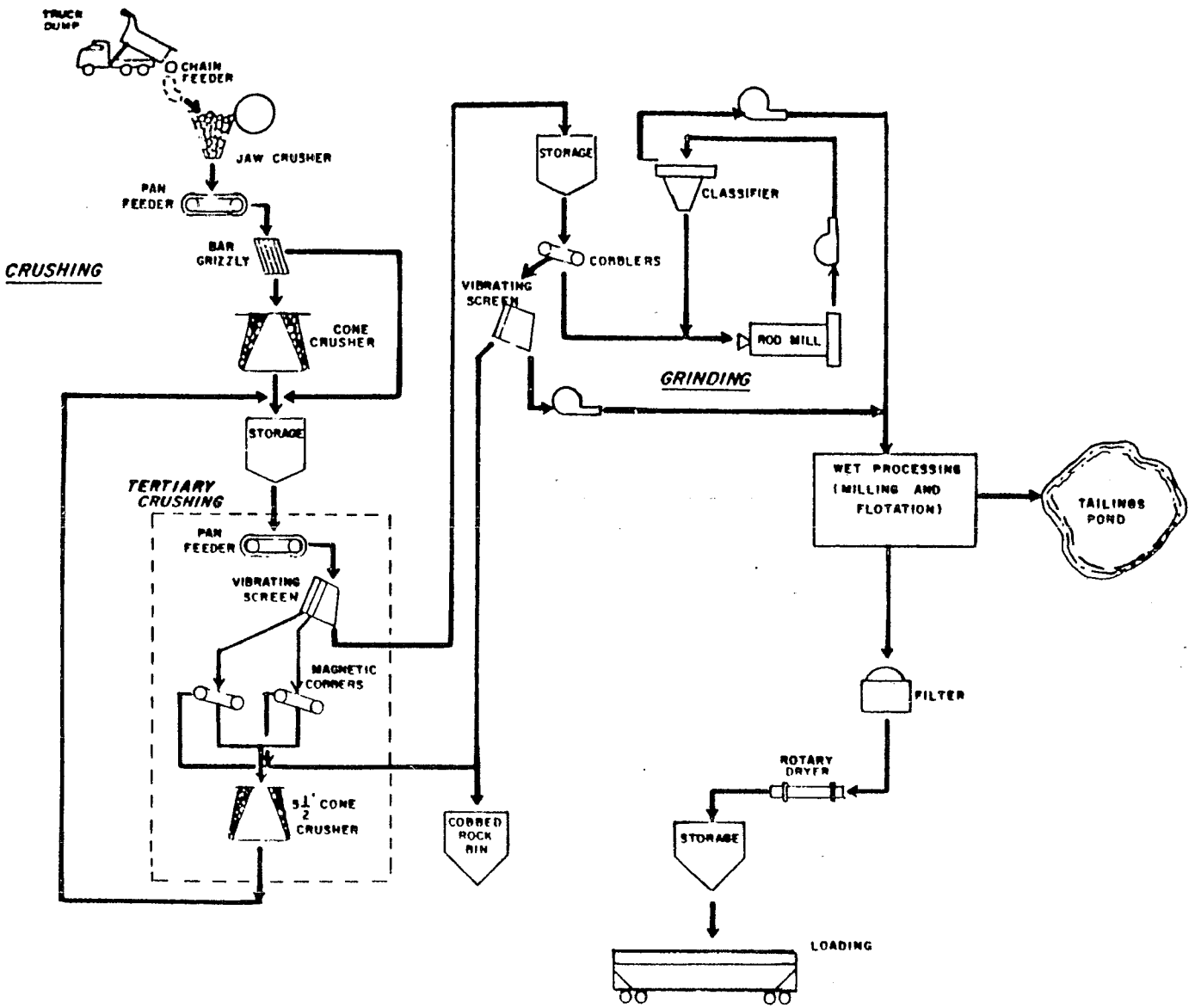

Figure 9.7-10 General schematic for initial steps in ore processing.[12]

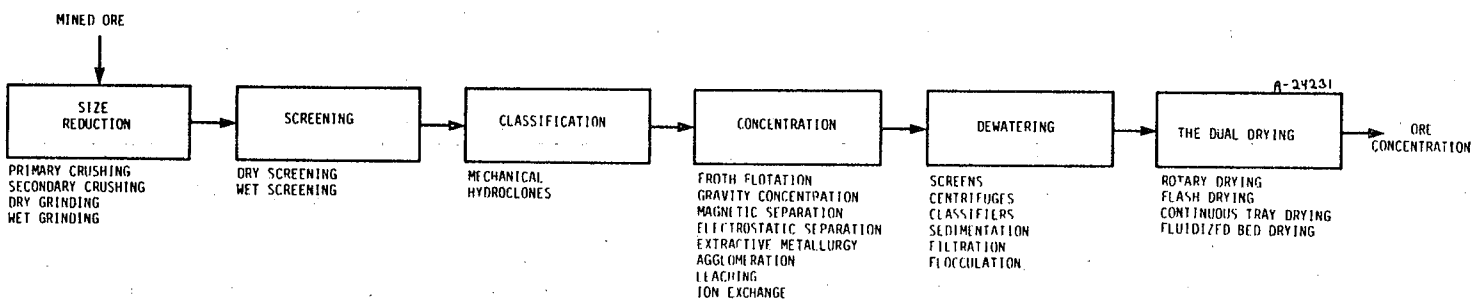

Figure 9.7-11 Beneficiation processes.[2]

many plants, requires that every piece of ore be passed through each unit of equipment in the process.

Metallic mineral processing typically consists of several stages of crushing, screening, conveying, separating, bagging and bulk loading, and waste disposal. These processes are described below along with their emission characteristics.

Crushing--Crushing is the operation of reducing the crude ore to the fineness necessary for mechanical separation or metallurgical treatment. Primary crushing reduces the ore to a maximum size of 10 to 15 cm; it is often accomplished at the base of the ore shaft in underground mines. Secondary crushing is usually a surface operation to reduce the ore further to about 2.5 cm.[12] In some ore dressing sequences, tertiary crushing may be included, although it is common practice to slurry the ore after the secondary stage and introduce it to a wet grinding stage. There are a number of mechanisms employed in the size reduction of mineral ores, and these mechanisms are exploited to various degrees depending on the crushing equipment used. Crushing equipment types include jaw, gyratory, impact, and roll crushers.

Particulate emissions are unavoidable in crushing operations; therefore, deliberate control methods are usually employed. The level of particulate emissions before control depends on the moisture content of the incoming ore, the type of crusher used, the type of ore processed, and the ore size range at the crusher exit. Particle size depends on the crushing mechanism employed and the amount of energy imparted to the fines. Impact-type crushers produce more fines and impart more energy to the particles than do compression crushers. These crushers consequently generate larger quantities of particulate emissions per unit weight of ore processed than any other type of crusher.[12] Rotating crushers produce an initial draft which further increases particulate emissions through dust entrainment.

Screening--Screening is used only for relatively coarse material at the primary and secondary size reduction stages because the rate of screening becomes considerably slower at fine mesh sizes. Industrial dry screening is rarely carried out below 20 mesh. Screening surfaces may be constructed of metal bars, perforated or slotted plates, or woven wire cloth. The capacity

of screens is dependent on the open area of the screening surface and the physical characteristics of the feed. Screening equipment commonly used in the metallic minerals industry includes grizzlies, shaking screens, vibrating screens, and revolving screens.

Screens generate dust emissions from agitation of the dry material. The amount of dust emitted depends on the size of the particles being agitated, the moisture content of the ore, and the agitation frequency and amplitude.

Conveying--The movement of ore between the various processing units is accomplished by feeders (apron, belt, reciprocating belt, vibrating, and Wobbler(TM)), belt conveyors, elevators (bucket and scraper), screw conveyors, and pneumatic conveyors (pressure and vacuum).

Ore conveying systems can be a source of process fugitive emissions if controls are not installed. Particulate emissions can be generated at any point where ore is transferred from one system to another by free fall, such as at transfer points between belt conveyors or from a tripper to storage. Conveying ore over long distances in the open air can be a source of emissions due to wind action. The extent of particulate emissions depends largely on the fineness of the ore being transported, moisture content, belt speed, and free fall distance.

Separating and Classifying--Mechanical air separators of the centrifugal type find wide acceptance in the industry for classification of dry materials in a relatively fine state of subdivision. In commercial practice, the separators usually follow vibrating screens extending from about 40 to 60 mesh and smaller. Forced air is used to classify fine particles. The air is either vented or recirculated; if vented, this air is a source of particulate emissions.

Bagging and Bulk Loading--In the metallic minerals industry, a valve type paper bag is sometimes used for shipping fine materials. Dust is emitted during the final stages of filling when dust-laden air is forced out of the bag. Fine product materials that are not bagged for shipment are either bulk-loaded in tank trucks or enclosed railroad cars or shipped. The usual method of loading is by gravity feeding through plastic or fabric sleeves. Bulk loading of fine material is a source of particulate emissions because dust-laden air is forced out of the truck or railroad car during the loading operation.

Waste Disposal--The metallic minerals mining and processing industry generates two types of waste material: the waste rock and overburden which are produced at the mine to expose the ore, and the tailings which are the waste from the ore concentration process. Pebble and boulder-sized waste material is usually piled, whereas fines are slurried and discharged to a pond. Both types of wastes can be a source of fugitive dust if left exposed to the action of wind, rain, or evaporation.

9.7.2.2 Emission Control Techniques. There are two broad categories for dealing with particulate emissions in the metallic mineral mining industry: suppression and collection. Dust suppression is the control of dust emissions by preventing the particles from becoming airborne. This technique is used primarily for fugitive dust emissions control and is accomplished by wetting systems or by installing some form of coverage. Dust collection usually involves exhausting the dust generating source(s) to a device that removes dust from the airstream passing through it. Table 9.7-14 lists several particulate emission sources common to the metallic mineral industry with the applicable control options for these sources.

Wet suppression systems are usually employed at the truck dump or crushing pit, and at the inlet and exit of the primary crusher. There are several wetting agents available to the industry. Their chemical compositions vary but they are usually composed of a hydrophobic group (long-chain hydrocarbon) and a hydrophillic group (usually a sulfate, sulfonate, hydroxide, or ethylene oxide) which, when added to water, reduce its surface tension and allow deeper penetration. One wet suppression system manufacturer claims 90 percent emission reduction from primary crushers to stockpile and reclaim.[13] It should be noted that the common industry practice is to use a wetting system as a supplement to dry collection systems; however, some plants use dry collection systems only.[12]

Dry collection consists of enclosing a particular source of emission with a hood. Dust-laden air emissions are transported to a central collection area or to several control devices. Hoods are generally classified into three broad groups: enclosures, receiving hoods, and exterior hoods.[14] Enclosures are commonly used at conveyor transfer points, crushers, and screens; they are usually the only type of hooding used in the industry.

Table 9.7-14. PARTICULATE EMISSION SOURCES AND CONTROL OPTIONS FOR THE PROCESSING OF METALLIC MINERALS[12]

Source	Method of control							
	Wet suppression system	Dust collection system[a]	Coverage of equipment	Oiling, paving	Windbreaks	Dust agglomerates, wetting	Vegetative cover	Other
Crushing	X	X	X					
Dry grinding	X	X	X					
Screening	X	X	X					
Conveying	X	X	X					X[b]
Conveyor transfer points	X	X	X					
Drying concentrate		X						
Concentrate loading and transfer		X	X					
Stockpiling					X	X		X[c]
Storage bins	X	X	X					
Haul roads and plant yard fugitive dust				X		X		
Wind erosion of stockpiles	X[d]		X		X			
Wind erosion of tailing dams and beach areas of tailing ponds					X	X	X	X[e]

[a]A system designed to capture and vent emissions to a control device.
[b]Spaced capture points exhausted to control device.
[c]Stacker or radial stacker conveyors.
[d]Effective use of system prior to stockpiling.
[e]Soil stabilization program.

Receiving hoods are used for high velocity dust collection; exterior hoods are rarely used in the mining industry. For detailed hooding exhaust rates and design considerations, see Section 5 of Volume 1.

Once the dust has been captured, it must be removed from the airstream by a collection device before final discharge to the atmosphere. These collection devices include wet scrubbers, dry cyclones, mechanical collectors, fabric filters, and electrostatic precipitators. Table 9.7-15 is a summary of emission tests of several of these collection devices.[15,16,17,18,19] Factors which affect the type of dust control device selected include particle and carrier gas characteristics, process parameters such as particulate concentration and flow rate, and operational characteristics such as pressure, temperature, moisture, corrosion service requirements and other physical limitations.

Wet scrubbers are the most common dust collectors in the metallic mineral processing industry. The chief scrubber designs used are wet cyclone, mechanical-centrifugal with water spray, and venturi. Wet cyclones have been operated using 0.5 to 0.8 liters of water per cubic meter of gas and have achieved collection efficiencies of 98 percent.[20] Venturi scrubbers have achieved efficiencies averaging 99.9 percent with throat velocities of 4570 to 6090 meters per minute and water consumption of 0.4 liters per cubic meter of gas. These high efficiencies are also evidenced by the low particle size ranges collected (less than 1 micrometer).[21]

Fabric filters are used for particulate emission control from point sources in the metallic mineral industry because of their high collection efficiencies and competitive annual costs. Electrostatic precipitators are rarely used in the metallic mineral processing industry. Their use is in iron ore pelletizing and for such aluminum industry applications as kiln drying and calcination operations involving refined bauxite and alumina. Efficiencies of 70 to 98 percent have been reported.[20]

Dry inertial separators are also commonly used in alumina plants to recover alumina product and emissions from kilns just prior to the passage of the airstreams into the electrostatic precipitators. The range of collection efficiency is from over 90 percent for greater than 30 micrometer sized particles to 60 percent for the 12 to 15 micrometer size range; efficiency is lower for smaller particles.[22]

Table 9.7-15. PARTICULATE CONCENTRATIONS AND PARTICLE SIZE DATA FOR METALLIC MINERALS PROCESSES[15,16,17,18,19]

Unit	Plant	Control device	Operating parameter	Inlet concentration, g/DSCM (gr/DSCF)	Size less than stated diameter	Outlet concentration, g/DSCM (gr/DSCF)	Outlet particle size
Primary crusher	A	Baghouse	0.88 m/min	3.07 (1.34)	16.6% (4.5 μm)	0.014 (0.006)	58.8%<5 μm
	B	Scrubber	2 kPa	unknown	unknown	0.009 (0.004)	80%<5 μm
	C	Scrubber	1.5 kPa	unknown	unknown	0.025 (0.011)	39%<5 μm
	D	Scrubber	1.5 kPa	0.302 (0.132)	20%<5 μm	0.007 (0.003)	48%<5 μm
Secondary crusher	C	Scrubber	1.5 kPa	2.75 (1.2)	5%<5 μm	0.041 (0.018)	13%<5 μm
	E	Baghouse	2.77 m/min			0.016 (0.008)	5%<5 μm
Screening	B	Scrubber	2 kPa		78%<5 μm	0.009 (0.004)	92%<5 μm
Screening and milling	D	Scrubbers	2 kPa	0.137 (0.06)	88%<5 μm	0.016 (0.007)	70%<3 μm
Ore storage	B	Scrubber	1.5 kPa	0.009 (0.004)	57%<2 μm	0.005 (0.002)	67%<1 μm
	E	Scrubber	1.5 kPa			0.016 (0.007)	5%<5 μm
Product handling truck loadout	C	Baghouse		0.073 (0.032)		0.030 (0.013)	
Conveyor transfer	C	Scrubber	1.5 kPa	0.169 (0.074)	20%<5 μm	0.025 (0.011)	39%<5 μm
	C			1.60 (0.70)		0.030 (0.013)	

9.7.3 Brick and Related Clay Products

The manufacture of brick and related clay products such as clay pipe, tile, pottery, and some types of refractory brick involves the mining, crushing, drying, dry grinding, and concentrating of the raw materials, and the blending, forming, cutting or shaping, drying or curing and firing of the final product. Since clay suitable for commercial use is found in all 50 States, this industry is fragmented with mining and manufacturing operations in most of the States. The structural clay products industry alone was composed of 850 firms in 1967; and in 1974, over 500 manufacturing plants were identified as producers of common brick and face brick.[23,24]

Particulate matter is the primary emission in the manufacture of brick and related clay products. The main source of dust is the materials handling procedure, which includes drying, grinding, screening, and storing the raw material. In addition, combustion products are emitted from the fuel consumed in the curing, drying, and firing portion of the process. Particulate emissions from the manufacture of brick and related structural clay products amounted to 515 Gg in 1977.[4]

9.7.3.1 Process Description. Structural clay products are manufactured from a variety of common clay or shale raw materials. The primary types are kaolinite and montmorillonite; they contain varying amounts of impurities, depending upon the location of the clay supply. After the clay is mined, it is crushed to remove stones and stirred before it passes onto screens in preparation for processing into brick or structural clay products (see Figure 9.7-12).[25] Particulate emissions arising from mining, crushing, and screening operations and the applicable control techniques are discussed in Section 9.7.1.

Crushed and processed clay is manufactured into brick and tile by forming the clay by extrusion or in molds, drying, and then firing the ware in a kiln. The blended clay raw materials are mixed with water and formed in an extruder or in molds to the desired shape. The formed product is then dried. Common brick can be air dried, but more frequently the brick and tile products are dried in a batch or tunnel dryer. Waste heat from the cooling section of the firing kiln is usually used for drying, but makeup heat can be provided by fuel combustion. If the dry press formation method has been

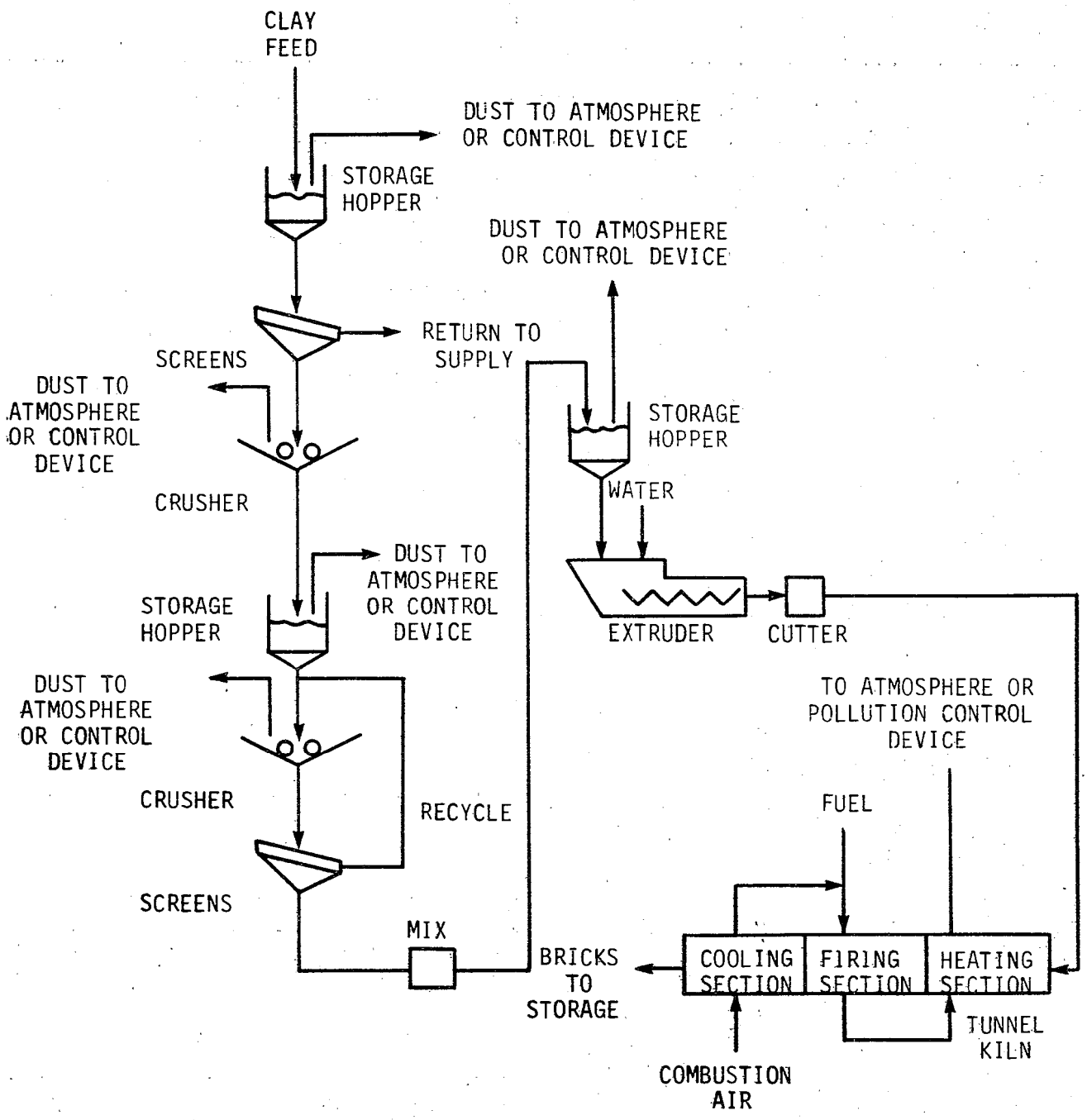

Figure 9.7-12 Common brick manufacturing using the continuous stiff-mud process.[25]

used, the formed product is fired without first being dried.

Brick and tile products are then fired in either a continuous tunnel kiln (usually) or a periodic kiln. In the tunnel kiln, cars are loaded with the formed pieces and pass continuously through the kiln in a counterflow to the air and combustion products. In the first chamber, the pieces contact the spent combustion air and are heated while the air is cooled prior to being exhausted from the kiln. The combustion of the fuel and more intense heating or firing of the pieces occurs in the second chamber where they are fused to final hardness. The fired pieces are cooled in the third chamber by preheating the incoming combustion air. The total time required for the pieces to pass through the kiln varies from about 40 hours to 270 hours. Temperatures in the hottest zone are in the 800 to 1100°C range. Approximately 4.3 to 5.7 Am^3/min of exhaust gas is generated for each megagram of daily kiln production. Flue gas temperatures are in the 150 to 315°C range. Kiln production is typically in the 45 to 225 Mg per day range.[24]

Uncontrolled particulate emissions from a brick kiln and dryer are summarized in Table 9.7-16.[26] A particle size analysis for the kiln emissions is summarized in Figure 9.7-13.[26]

9.7.3.2 Particulate Control Techniques. Raw material crushing, grinding, drying, calcining, blending, conveying, and stockpiling in the processing of clay products all cause particulate emissions. For applicable control techniques, see Section 9.7.2 and Section 5 of Volume 1.

Particulate emissions are also produced by the combustion of oil or solid fuels in tunnel kilns at brickmaking plants. In addition, other emissions such as sulfur oxides, fluorides, and hydrocarbons may be generated from building brick or refractory tunnel kilns. The amount and characteristics of these emissions are dependent on the chemical composition of the clay. Sometimes, other materials are added to the clay to improve the quality of the brick or tile; for example, sawdust, coal, ashes, and ground-fired bricks are added.

The type of control equipment used depends to a large extent on the type of fuel being burned. Coal, sawdust, natural gas, and oil are used in the building brick industry. Only natural gas and oil are presently used at refractory plants. Emissions from gas-fired kilns are about 5% of those

TABLE 9.7-16. UNCONTROLLED PARTICULATE EMISSIONS FROM A BRICK KILN AND DRYER[26]

Facility	Particulate emission rates				Comments
	lb/ton brick	kg/MT brick	gr/dscf	mg/dscm	
Firing kiln	1.61	0.805	0.0636	145	Approximately 75% coal-fired and 25% gas-fired; 4.3% ash in coal.
Dryer	0.0671	0.0336	0.0012	2.81	
Firing kiln	2.31	1.16	0.0893	204	Approximately 75% coal-fired and 25% gas-fired; 6.9% ash in coal
Dryer	0.0592	0.0296	0.0011	2.52	

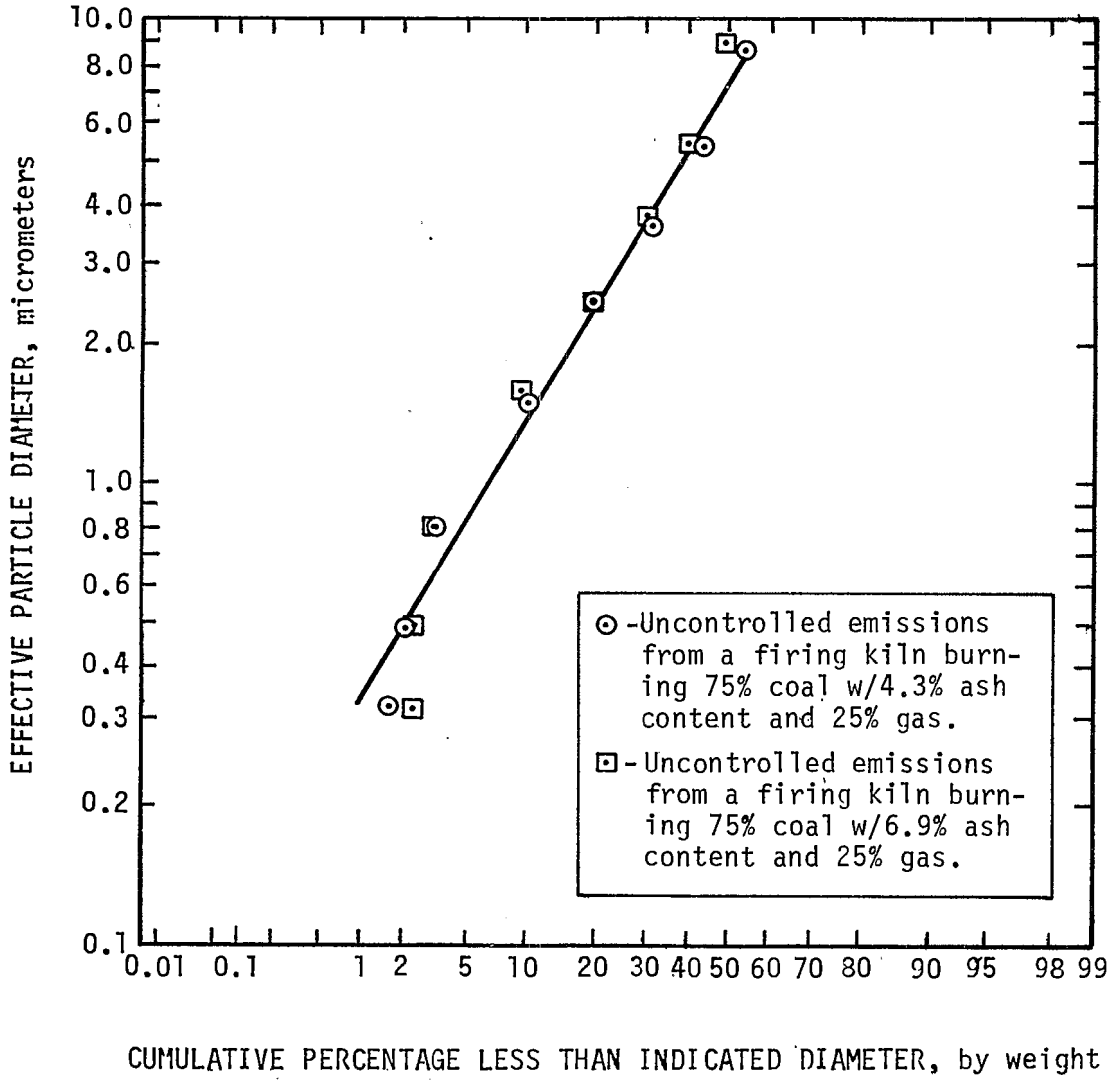

Figure 9.7-13 Particle size distribution for emissions from a brick kiln and dryer.[26]

from coal-fired kilns.[24] At building brick plants that have minimal gaseous pollutants, fabric filters may be used to control particulate emissions from coal-fired tunnel kilns.[27] However, these devices may be subject to bag blinding if the temperature is not maintained above the dew point. Gas-fired tunnel kilns emit such low levels of particulate emissions that the majority are uncontrolled. Wet scrubbing may be used at those sites that have usually high levels of hydrocarbons, sulfur, and flouride in the clay. At one refractory plant, a wet ionic scrubber is used to control gaseous fluorides, chlorides, and ammonium bisulfuric acid formed from the reaction of ammonia and sulfur oxides.[28] Low energy scrubbers also have low efficiency for the removal of volatized organic matter due to its small particle size.

In addition to "add on" control devices, particulate emissions from coal-fired brick and tile kilns are greatly reduced with the use of oil or gas--to 5 percent of the coal level.[24]

9.7.4 Beneficated Clay Products Manufacturing

The production of products from beneficated clays utilizes processes similar to those applicable to the manufacturing of structural clay products (see Section 9.7.3). These processes involve the grinding, screening, calcining, and blending of the raw clay materials and the forming, drying or curing, and firing of the ware. While structural clay products are generally manufactured from common crushed clay, beneficated clays are used to manufacture numerous products including ceramics and refractories, adhesives, drilling mud, filter material, foundry sand, cosmetics and pharmaceuticals, paper coating and fillers, pesticides and gypsum products.[23]

Particulate emissions occur during the handling of raw materials, grinding, screening, drying and firing operations. In 1977, these emissions amounted to 114 Gg.[4]

9.7.4.1 Process Description. The production of beneficated clay products involves the conditioning of the basic ores by several methods. These include the separation and concentration of the minerals by screening, floating, wet and dry grinding and blending of the desired ore varieties. The multiplicity of beneficated clay products results in a number of highly variable process flowsheets. A description of the processes applicable to the manufacture of each product is beyond the scope of this discussion.

However, since many beneficated clays are used for ceramic and refractory products, their production procedures are described briefly.

The basic raw materials in ceramic clay manufacture are kaolinite and montmorillonite clays. These clays are refined by separation and bleaching and then blended, kiln dried, formed into the final product, and kiln fired. The benefication and bleaching processes for ceramic clay are illustrated in Figure 9.7-14.[29]

Refractories are those materials that are used to withstand the thermal, chemical, and physical effects that occur in furnaces. Refractories are sold in the form of firebrick, silica brick, magnesite brick, chromite brick, magnesite-chromite brick, zirconia, and others. The usual operations in manufacturing kiln-fired refractories include grinding and screening, calcining, mixing, pressing or molding and repressing, drying, and burning. Depending upon the desired product, raw materials may be calcined or dried prior to mixing and blending. Figure 9.7-15 illustrates an overall flowsheet for a typical plant producing a kiln-fired refractory. The decision to calcine or dry the raw material depends upon its end use. The type of clay or refractory brick and its ultimate density are among the factors that influence the decision.

Fused-cast refractories are manufactured by: carefully blending such components as alumina, zirconia, silica, chrome, and magnesia; melting the mixture in an electric-arc furnace at temperatures of 1760 to 2480°C; pouring it into molds; and slowly cooling it to the solid state. Fused refractories are less porous and more dense than kiln-fired refractories. Castables also refer to unformed dry mixes which are later mixed with water and applied in position, after which they solidify.

9.7.4.2 Emission Control Techniques. Particulate matter from the processing and manufacturing of beneficated clay products is emitted from the raw materials handling procedures, grinding, drying, calcining and firing operations. Factors affecting these emissions include: the type and quantity of clay processed, the type of grinding (wet or dry), the temperature within the dryers, gas velocities and flow direction within the kilns, type of dryer and firing-kiln used, final clay moisture content, and impurities within the raw material ores.

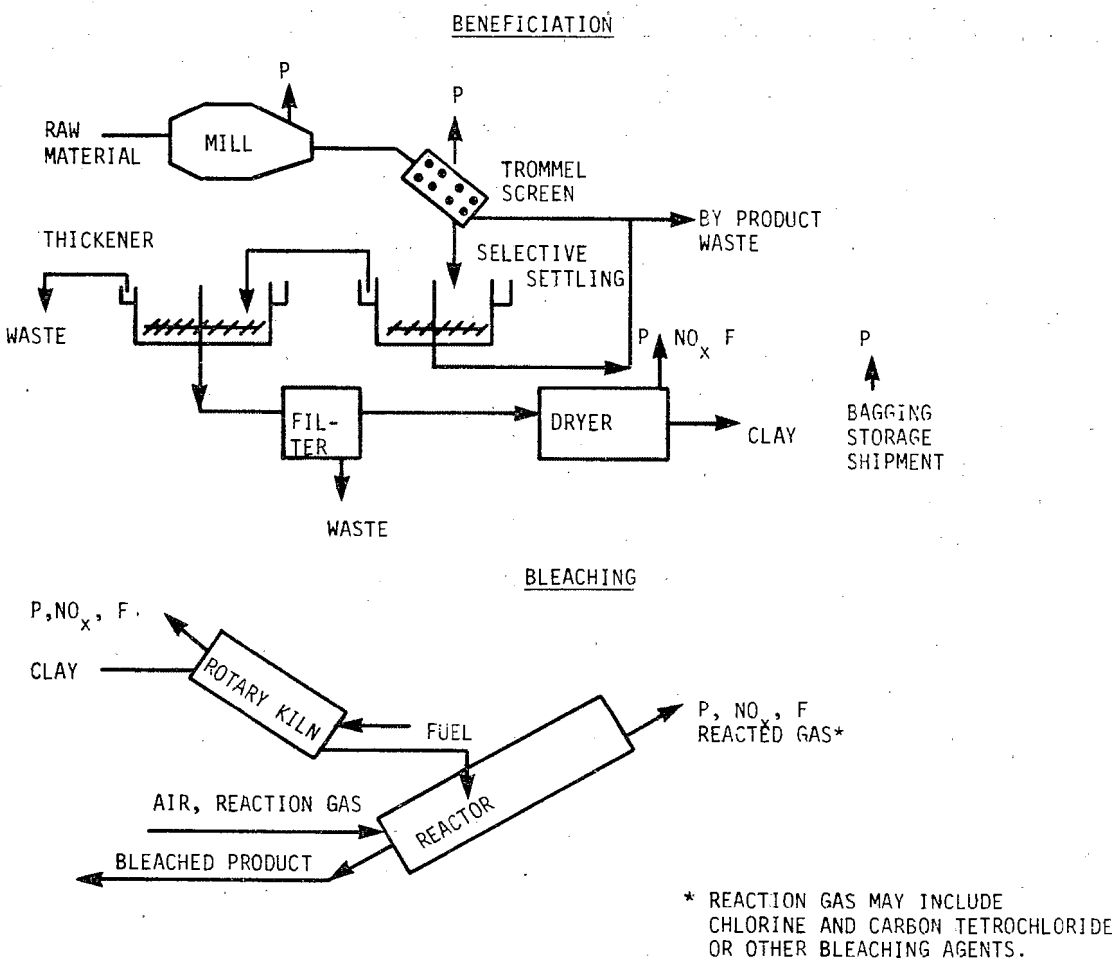

Figure 9.7-14 Ceramic clay manufacturing processes.[29]

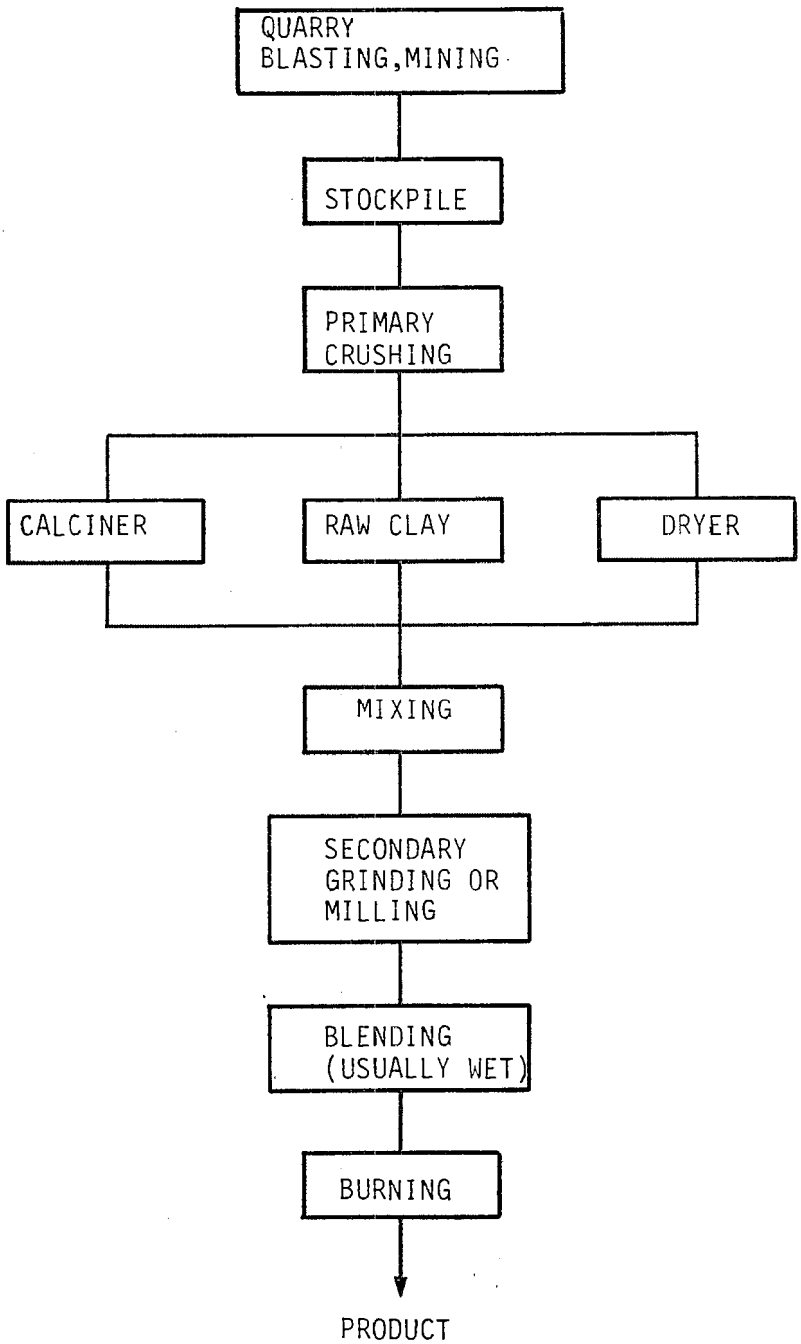

Figure 9.7-15. Flow diagram, kiln-fired refractories manufacturing.[29]

Particulate emissions from the manufacture of castable refractories are created by the drying, crushing, handling and blending phases of this process, as well as by the actual melting process and the molding phase. These emissions are affected by the amount of material handling and pretreatment required before melting and by the components in the melt. Generally, increasing concentrations of silicon will increase particulate emissions. Emissions from the electric arc furnace are condensed fumes consisting of very fine particles, the majority of which are 2 micrometers or smaller.[8]

Common control techniques for the beneficated clay manufacturing processes include mechanical collectors, wet scrubbers, electrostatic precipitators, and fabric filters. Cyclones for the coarser material, followed by wet scrubbers, fabric filters, or electrostatic precipitators for dry dust, are the most effective control systems. A variety of control devices may be used to reduce both particulate and gaseous emissions. Almost any type of particulate control system will reduce emissions from the materials handling process. However, good design and hooding are required to capture the emissions (see Section 5 of Volume 1 for additional details). Emissions from the electric arc furnace used in castable refractory production are largely condensed fumes and consist of very fine particles. Fabric filters may be used to control these emissions. Multicyclones, baghouses, and electrostatic precipitators have been used on rotary and vertical kilns in kiln-fired refractory plants.

9.7.5 Gypsum

Gypsum, or hydrated calcium sulfate, is mined in open pits and underground mines and then processed into the following product categories (each category's approximate percent of the total produced is given):

- Crushed or pulverized gypsum (cement retarder, agricultural gypsum)--27 percent.
- Pulverized calcined gypsum (various types of wall plasters and specialty plasters)--6 percent.
- A variety of prefabricated gypsum-core board products (wallboard, rocklath, sheathing, and wallboard)--67 percent.

In 1978, the industry included aproximately 100 facilities which either mined and mechanically processed crude gypsum rock, or calcined and produced

prefabricated products. Thirty-six of these facilities were integrated mining plus fabricating installations and 41 were mines. Twenty-nine companies sell sized, ground, or crushed gypsum rock. The industry produced about 19 Tg of gypsum products from 12 Tg of domestic gypsum plus 7 Tg imported gypsum.[30] A typical calcining plant produces 20.4 Mg per hour.[31]

Emissions of particulate gypsum or calcium sulfate are generated by grinding equipment, calciners, and dryers; and in 1977, these emissions were estimated to amount to 70 Gg.[4]

9.7.5.1 Process and Emission Control Techniques. All gypsum processing operations are similar, except for differences in product mix. Depending on the final product, the sequence of processing steps is as follows:

- Mining
- Crushing/grinding[a]
- Ore drying
- Calcining (either in kettles or other types of calciners)
- Blending
- Fabricating
- Packaging

The mining and processing of a number of nonmetallic minerals, including gypsum, are described in Section 9.7.1. Figure 9.7-16 illustrates the process flow sheet for various gypsum products, as well as the particulate emission sources.

Particulate control technologies applicable to process and fugitive emissions from the mining and crushing/grinding operations (if used) are similar to those for nonmetallic minerals. Generally, cyclones, bag filters, and electrostatic precipitators, each individually or in combination, if properly designed and operated, are capable of meeting the most restrictive emission limitations.[32]

9.7.5.1.1 Ore drying. Crushing is followed by ore drying; emissions from ore drying consist of particulates from both drying and fuel combustion, and gases from fuel combustion. Particulates are the most significant

---

[a]Grinding usually follows ore drying when drying is employed.

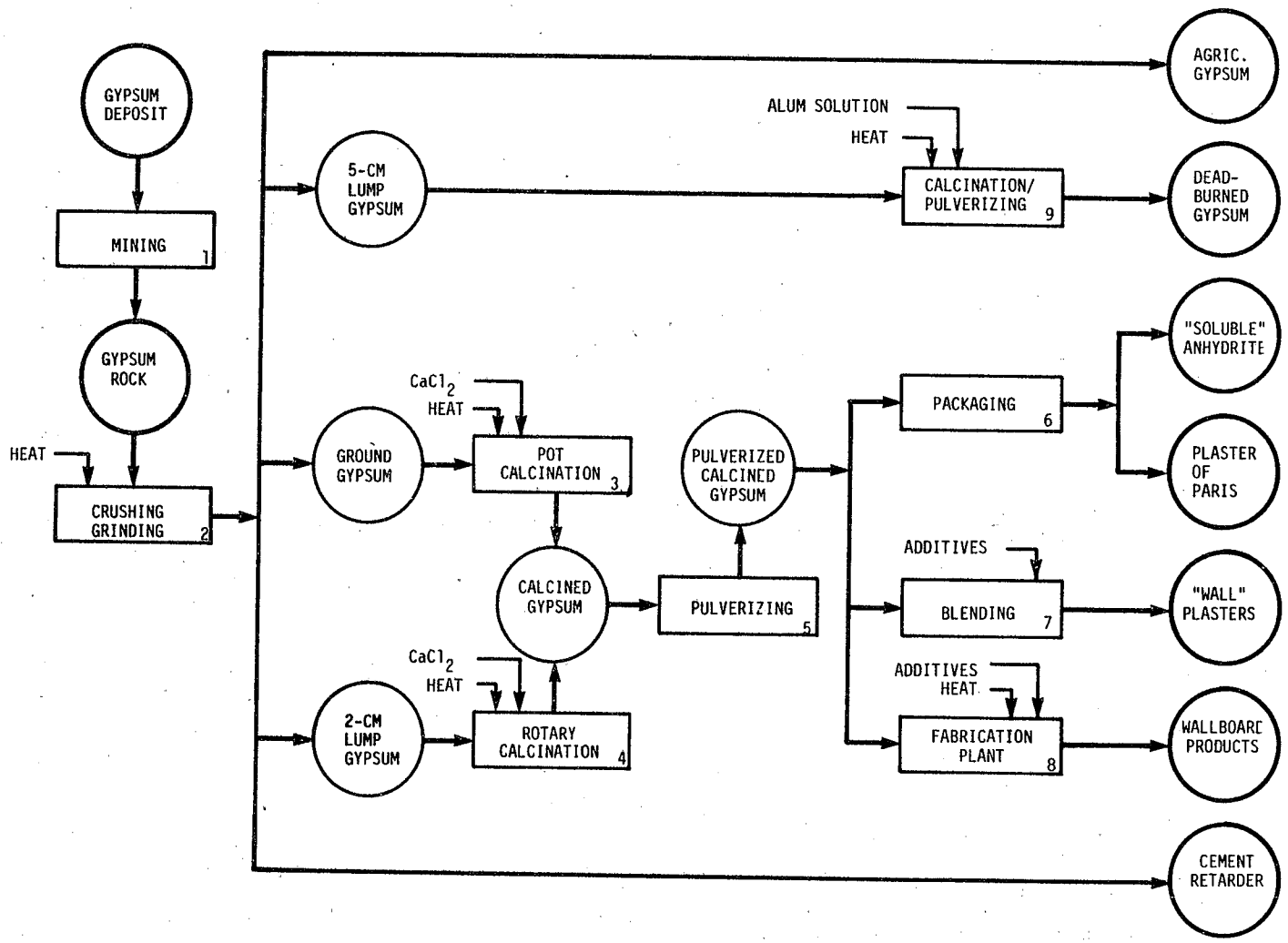

Figure 9.7-16 Gypsum products process flow diagram.

emissions from ore dryers. Such particulates are generated mainly by the entrainment of ore fines in the drying gas stream; however, some particulates are emitted from fuel combustion. Emissions from the entrainment of ore fines depend mainly on the gas flow through the dryer. Thus, indirect-heated dryers that limit the air flow to the amount needed to carry away moisture will have less entrainment than direct-heated dryers.

Dryers used in the gypsum industry are normally direct-fired, with the combustion gases directly contacting the gypsum ore. Indirect heating with combustion gases would still result in the same emissions to the atmosphere.

Uncontrolled particulate emissions are estimated from the reported controlled emissions and from the reported particulate control efficiencies. Table 9.7-17 gives uncontrolled and controlled emissions for an ore dryer, as reported in a permit application.[33]

From data reported in the U.S. EPA's National Emissions Data System (NEDS) the uncontrolled particulate emission factors for ore dryers range from 1.3 g/kg dried (3 lb/ton dried) to 95 g/kg dried (190 lb/ton dried). The average uncontrolled emission factor, based on a production-weighted average of available data, is about 25 g/kg dried (49 lb/ton dried). This average value is comparable to the average value of 20 g/kg dried (40 lb/ton dried) reported in the Compilation of Air Pollutant Emission Factors (U.S. EPA Publication No. AP-42).

The only emission control systems used on gypsum dryers are particulate control devices. Sulfur oxide and nitrogen oxide controls are not needed when clean-burning fuels are used. Emission controls used in current facilities include cyclones, electrostatic precipitators, fabric filters, and wet scrubbers. The reported controlled particulate emission factors range from 0.011 g/kg dried (0.021 lb/ton dried) to 4.0 g/kg (8.0 lb/ton dried), with a production-weighted average of 0.25 g/kg (0.50 lb/ton). Test data for emissions controlled by fabric filters show emission factors as low as 0.012 g/kg dried (0.023 lb/ton dried) and grain loadings as low as 0.016 g/m^3 (0.0071 gr/acf). These lower controlled levels demonstrate control efficiencies exceeding 99.9%.

9.7.5.1.2 Calcining. Emissions from calcining operations consist of particulates from both fuel combustion and calcining of the gypsum ore as well as of gases from fuel combustion.

Table 9.7-17. ORE DRYING EMISSIONS REPORTED IN A PERMIT APPLICATION[a,33]

Controlled particulate emissions[b]	Mg/yr (ton/yr)	11 (12)
	g/kg (lb/ton)	0.06 (0.12)
	g/m3 (gr/acf)	0.05 (0.02)
Uncontrolled particulate emissions	Mg/yr (ton/yr)	18,000 (20,000)
	g/kg (lb/ton)	95 (190)
	g/m3 (gr/acf)	92 (40)

[a]Dryer fires No. 6 fuel oil with 1.5% sulfur; particulate emissions estimates include particulates from drying and from fuel combustion.

[b]Fabric filter control; air flow = 14,000 acfm (6.6 m^3/s).

Emissions from the entrainment of raw and calcined gypsum depend on the gas flow through the calciner and on the agitation within the calciner. Indirect-heated calciners that limit the air flow to the amount needed to carry away moisture could have less entrainment than direct-fired calciners but data supporting this comparison are unavailable.

Both direct- and indirect-heated calciners are used in the gypsum industry. In direct-heated calciners, as in flash calciners, hot combustion gases directly contact the gypsum. Only clean fuels can be burned to avoid contaminating the calcined product. Indirect-heated calciners such as kettles predominate in the gypsum industry. In these calciners, heat for calcining is provided by hot combustion gases flowing outside the kettle shell and in flues through the kettle. The combustion gases are normally vented separately from the kettle off-gas.

Estimates of controlled and uncontrolled emissions from gypsum calciners are available from NEDS data. Uncontrolled particulate emissions are estimated from the reported controlled emissions and from the reported particulate control efficiencies.

Uncontrolled particulate emission factors for calciners range from 7.5 g/kg calcined (15 lb/ton calcined) to 65 g/kg calcined (130 lb/ton calcined). The average uncontrolled emission, based on a production-weighted average of available data, is about 28 g/kg calcined (56 lb/ton calcined). This average compares to the average value of 45 g/kg calcined (90 lb/ton calcined) reported in the Compilation of Air Pollution Emission Factors. Estimated uncontrolled emissions from typical calciner facilities range from 360 Mg/yr (400 tons/yr) to 5.7 Gg/yr (6300 tons/yr).

The only emission control systems used on gypsum calciners are particulate control devices. Particulate emission controls used in current facilities include cyclones, electrostatic precipitators, fabric filters, and wet scrubbers. Combustion gases from the indirect-heated calciners circumvent the control device and are combined with the cleaned off-gas downstream of the emission control device. The reported controlled particulate emission factors range from 0.003 g/kg calcined (0.006 lb/ton calcined) to 3.7 g/kg calcined (7.3 lb/ton calcined), with a production-weighted average of 1.2 g/kg calcined (2.4 lb/ton calcined). The relatively high average

controlled emission factor results from the large emissions from several uncontrolled calciners. Tests data for emissions controlled by fabric filters show emission factors as low as 0.003 g/kg (0.006 lb/ton calcined) and grain loadings as low as 0.0092 g/m^3 (0.0040 gr/acf). These controlled levels demonstrate control efficiencies exceeding 99.9%.

9.7.5.1.3 Dry mixing. Emissions from dry mixers occur during feeding and blending of gypsum and various additives. These emissions consist of gypsum and additive dusts. Continuous dry mixing in screw conveyors is used for gypsum board manufacture, and dry mixing in batch equipment is used for plaster manufacture.

Available data on the uncontrolled and controlled particulate emissions from dry mixing, presumably batch dry mixing, are summarized in Table 9.7-18.[34,35,36] These data include data from the NEDS (Plant LL), a permit application (Plant Q), and a source test report (Plant AA). Data from NEDS include estimated uncontrolled emissions based on the reported controlled emissions and the reported particulate control efficiency. The permit application contains a gypsum producer's estimates of the uncontrolled and controlled emissions.

The only two estimates of the uncontrolled particulate emission factors for dry mixing are 10 g/kg mixed (19 lb/ton mixed) and 33 g/kg mixed (65 lb/ton mixed). The average uncontrolled emission factor based on a production-weighted average of available data is 10 g/kg mixed (20 lb/ton mixed). Estimated uncontrolled emissions from two facilities are 2.9 Gg (3200 tons/yr) and 91 Gg (100 tons/yr).

The reported particulate emission factors for two dry mixers controlled by fabric filters are 0.011 g/kg mixed (0.022 lb/ton mixed) and 0.65 g/kg mixed (1.3 lb/ton mixed), with a production-weighted average of 0.017 g/kg mixed (0.033 lb/ton mixed). Test data for emissions controlled by fabric filters show an emission factor of 0.026 g/kg mixed (0.052 lb/ton mixed) and a grain loading of 0.015 g/Nm^3 (0.0065 gr/scf).

9.7.5.1.4 Scoring and chamfering. Emissions from scoring and chamfering consist of paper fibers. Available data on the emission of fibers from scoring and chamfering are shown in Table 9.7-19.[33,35,37] These data are derived from the NEDS (Plant N) and two permit applications (Plants KK

Table 9.7-18. DRY MIXING EMISSIONS[34,35,36]

Plant ID	Operation	Control device	Gas flow rate, m^3/s	(acfm)	Controlled particulate emissions, Mg/yr	(ton/yr)[a]	g/kg	(lb/ton)	g/m^3	(gr/acf)
Plant Q	Dry mixing	FF[b]	2.8	6000	3.4	3.7	0.011	0.022	0.039	0.017
Plant LL	Blending	FF			1.8	2	0.65	1.3		
Plant AA[c]	Blending/ handling	FF	1.6[d]	3374	0.6	0.6	0.018	0.035	0.011[e]	0.0049
			2.0[d]	4200	0.8	0.9	0.028	0.055	0.014[e]	0.0061
			1.7[d]	3608	1.0	1.1	0.033	0.065	0.019[e]	0.0084
			1.8[d]	3727	0.8	0.9	0.026	0.052	0.015[e]	0.0065

[a]Assumes 8322 hours/year.
[b]FF = fabric filter, Cyc = cyclone.
[c]EPA-5 used.
[d]Nm^3/s (scfm).
[e]g/Nm^3 (gr/scf).

Table 9.7-19. SCORING AND CHAMFERING EMISSIONS DATA[33,35,37]

Plant ID	Plant KK	Plant N	Plant OO
Control device	FF[a]	Cyc[a]	Cyc/FF[a]
Gas flow rate			
acfm	2700	5298	3000
m^3/s	1.3	2.5	1.4
Controlled particulate emissions			
ton/yr	0.058[b]	60	0.42[b]
Mg/yr	0.053[b]	55	0.38[b]
lb/ton[b]	0.00054		0.0029
g/kg[b]	0.00027		0.0015
gr/acf	0.0006	0.37	0.0039
g/m^3	0.0013	0.85	0.0089
Uncontrolled particulate emissions			
ton/yr	58[b]	300	57[b]
Mg/yr	53[b]	270	51[b]
lb/ton[c]	0.54		0.40
g/kg[c]	0.27		0.20
gr/acf	0.60	2	0.53
g/m^3	1.4	5	1.2
Control efficiency	99.9	80.0	99.3

[a]FF = fabric filter, Cyc = cyclone.
[b]Assumes 8322 hrs/yr.
[c]Expressed as units particulate per unit wallboard formed.

and OO). Data from the NEDS include estimated uncontrolled emissions based on the reported controlled emissions and reported control efficiency.

The only two estimates of the uncontrolled particulate emission factors for scoring and chamfering are 0.27 g/kg wallboard formed (0.54 lb/ton) and 0.20 g/kg (0.40 lb/ton), with a production-weighted average of 0.23 g/kg (0.46 lb/ton). Estimated uncontrolled emissions from three facilities range from 51 Mg (56 ton) per year to 270 Mg (300 ton) per year.

Emissions from scoring and chamfering are usually controlled by cyclones and/or fabric filters. The reported controlled emission factors for two facilities controlled by fabric filters are 0.00027 g/kg (0.0054 lb/ton) and 0.0015 g/kg (0.0029 lb/ton), with control efficiencies of 99.9 and 99.3 percent.

9.7.5.1.5 Board end sawing. Emissions from board end sawing consist of gypsum and fibers generated when dried board or block is sawed to give smooth, straight ends.

Data from the NEDS and two permit applications include estimated uncontrolled emissions based on the reported controlled emissions and the reported particulate control efficiency. The permit applications contain gypsum producer estimates of the uncontrolled and controlled emissions. Table 9.7-20 summarizes source test data from one board end-sawing operation controlled by fabric filters.[38]

The uncontrolled particulate emission factors range from 0.5 g/kg wallboard processed (1 lb/ton) to 50 g/kg wallboard processed (100 lb/ton), with a production-weighted average of 23 g/kg (47 lb/ton). Estimated uncontrolled emissions from typical facilities range from 36 Mg (40 tons) per year to 15 Gg (17,000 tons) per year.

Emission controls applied to board end-sawing operations include cyclones and fabric filters. The reported controlled particulate emission factors range from 0.011 g/kg wallboard processed (0.021 lb/ton) to 0.7 g/kg wallboard processed (1.4 lb/ton), with a production-weighted average of 0.35 g/kg (0.70 lb/ton). None of these emission factors has been verified by source testing. Test data are available only to estimate the grain loading in exhausts from fabric filter-controlled operations. As shown in Table 9.7-20, one series of tests showed controlled grain loadings of about

Table 9.7-20. END SAWING EMISSIONS MEASURED IN SOURCE TESTING[a,38]

Gas flow rate		Gas temperature		Particulate emission			
m^3/s	acfm	°C	°F	g/s	lb/h	g/m^3	gr/acf
0.90	1912	32	90	0.0058	0.046	0.0064	0.0028
0.93	1977	32	90	0.0019	0.015	0.0021	0.0009
0.90	1908	33	91	0.0066	0.052	0.0074	0.0032
0.91	1932	32	90	0.0048	0.038	0.0053	0.0023

[a]EPA-5 testing of fabric filters.

0.0053 g/m^3 (0.0023 gr/acf). A single test at another board end-sawing operation showed a grain loading of 0.011 g/m^3 (0.0048 gr/scf).[39] These levels probably correspond to control efficiencies exceeding 99.5%.

9.7.6 Lime

Lime is the high-temperature product of the calcination of limestone. Chief products of the lime industry are quicklime, slaked or hydrated lime, dolomite, and hydrated dolomite. In 1974, total lime production by 172 plants was 19.6 Tg. Of this total, 17.3 Tg were quicklime (calcium oxide) and 2.3 Tg were hydrated lime (calcium hydroxide).[40]

Industrial processes emit limestone and lime dust, flyash from fuel combustion, and soot and tars resulting from the incomplete combustion of fuels. Total particulate emissions from lime production in the U.S. in 1977 amounted to 155 Gg.[4]

9.7.6.1 Process Description. The basic processes in the production of lime are: (1) quarrying the limestone raw material, (2) preparing the limestone for kilns by crushing and sizing, (3) calcining the limestone, and (4) processing the quicklime further by hydration.[41] Figure 9.7-17 shows a generalized lime manufacturing process and the potential particulate emission points.

Lime is made from limestone which is subjected to temperatures of about 1100°C (2000°F) to break it down chemically, producing quicklime and releasing CO_2. Calcining at this temperature produces a soft, porous, highly reactive lime.

In the United States, calcination is carried out in a variety of kilns, including the long rotary kiln, the short rotary kiln with external stone preheater, the vertical or shaft kiln, the rotary hearth or Calcimatic kiln, and the fluidized bed kiln. Each type has its own advantages, but the U.S. lime industry apparently favors rotary kilns; almost 90 percent of U.S. lime production is processed in rotary kiln systems.[42] Virtually all kilns built in 1974-1975 were rotary kilns, and this trend is expected to continue in the future.[43] One factor that makes the rotary kiln attractive for processing lime in the future is that it is the only kiln that can presently use coal and still maintain product quality.[44]

The operation of long and short rotary kilns is basically identical. These kilns are slowly rotating, slightly inclined cylindrical furnaces

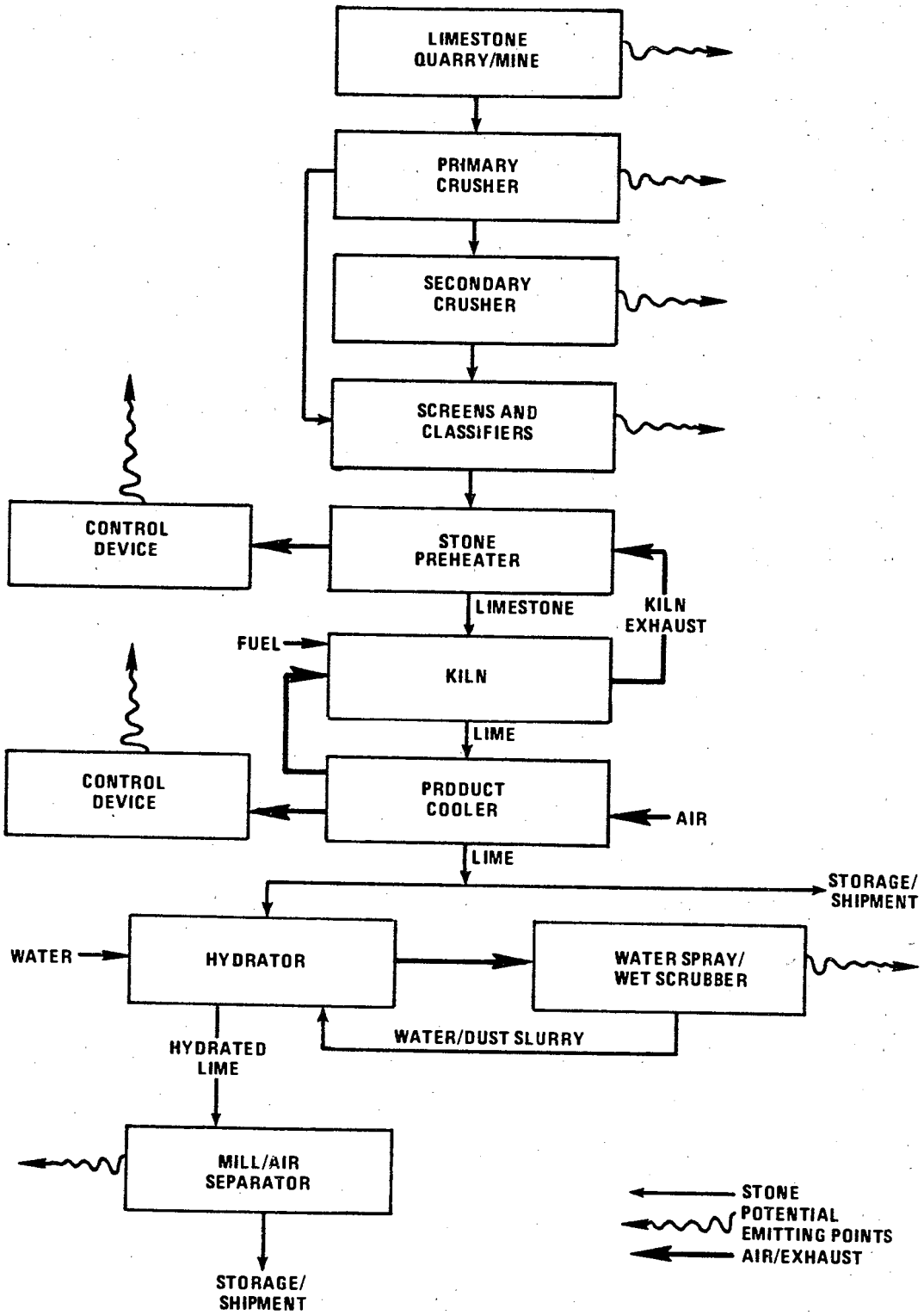

Figure 9.7-17 Generalized lime manufacturing plant.[40]

made of heavy steel plate lined with refractory brick. They are fired by one or combinations of three available fuels: natural gas, pulverized coal, or oil. The largest kiln now in operation in the U.S. has a production capacity of almost 1000 tons of lime per day. Kilns vary in size, ranging from about 2 to almost 5 meters in diameter and from 18 to 137 meters in length.

Limestone is fed into the elevated end of the kiln and is discharged as quicklime at the lower end into the cooling system. No more than 10 percent of the kiln is filled with limestone or lime as it moves slowly through the long cylindrical furnace in a gentle tumbling motion. Usually, cooling air is induced into the discharge end of the product cooler and into the kiln as secondary combustion air. The combustion gases flow countercurrent to the flow of the stone toward the charging end, where they are used to preheat the kiln feed. In the long rotary kiln, the exhaust gas temperature ranges between 593 and 760°C. In the external limestone preheater of the short rotary kiln, the exhaust gas temperatures range between 926 and 1148°C.

Although most lime produced is sold as lime, a small amount (10 percent in 1974) is converted into slaked lime or hydrated lime.

In most hydration plants, water is added to the lime in a pug mill premixer where there is thorough blending of the lime and water. The lime-water mix then goes to the agitated hydrator where most of the chemical reaction takes place. The reaction is exothermic and the heat of reaction converts part of the water in the mix to steam. A fan maintains a slight negative pressure in the hydrator, and the steam is discharged to the atmosphere along with any air that enters the hydrator through the charging port. Hydrator emissions are normally controlled by the use of either water sprays in the hydrator stack or by wet scrubbers. The resulting slurry or milk of lime is usually returned to the premixer as part of the slaking water. Virtually all hydrators have this equipment integrally installed.[45]

9.7.6.2 Emission Characteristics and Applicable Control Technologies. Nearly every lime production process emits dust. Fugitive and process emissions of particulate limestone are generated by mining, handling, crushing, and screening operations. Applicable control techniques for these operations are discussed in Section 9.7.1 and Section 5 of Volume 1. Lime dust is

emitted in the hot kiln gases and from the hydrator. Flyash, soot, and tars may be generated by fuel combustion used as a heat source for calcining in the kiln. Fugitive emission sources of lime dust include screening and pulverizing operations, storage silo vents, packaging and loading equipment, materials handling, transfer and conveying operations, and plant roads.

Chemical analysis of solid particulate matter emitted from the stacks of natural gas-fired rotary kilns is listed in Table 9.7-21. These particles average 5 to 6 micrometers in size.[41] The size distributions of emissions from three other lime manufacturing emission sources are given in Table 9.7-22. A summary of emissions sources and control methods is given in Table 9.7-23.

Rotary kiln emissions can be controlled by fabric filters, wet scrubbers, ESPs or gravel bed filters. Table 9.7-24 is a summary of emission tests from rotary lime kilns. Baghouses or high-energy scrubbers are most frequently used for controlling dust emissions from rotary kilns. Baghouses generally offer the highest particulate matter collection efficiency of any gas treatment method. Glass fiber bags with graphite and silicone finishes are commonly used. Some form of gas cooling is required ahead of fabric filters since conventional fabrics cannot withstand temperatures in excess of approximately 300°C. Kiln exhaust temperatures generally exceed 538°C. Cooling is achieved by: (1) evaporative water sprays, (2) indirect radiation convection heat exchange, (3) ambient air dilution, (4) external stone preheating, or (5) a combination of the aforementioned devices. Pressure drops of 1.25 kPa and a filtering velocity of 0.67 m/min are typical.[41] The most common high pressure drop scrubber used for controlling emissions from rotary lime kilns is the venturi scrubber. For high removal efficiency, a pressure drop of 5.5 kPa is required.[41]

Precipitators for lime kiln applications are of the dry, horizontal flow construction. Since they are constructed of carbon steel, the kiln gas must be cooled by methods similar to those described for the baghouse. Precipitators generally can achieve 90 to 99 percent particulate removal efficiencies. Higher efficiencies can be attained by increasing the precipitator size.[41]

Gravel bed filters have only recently been applied to rotary kilns in the U.S. They clean exhaust gases in three steps. First, the gas enters

Table 9.7-21. COMPOSITION OF PARTICULATE MATTER FROM NATURAL GAS FIRED LIME KILNS[40]

Emission component	Chemical analysis	
	High-calcium lime, wt. %	Dolomitic lime, wt. %
Acid insoluble	0.66	0.45
Heavy metal oxides (R_2O_3)	0.97	0.35
$CaCO_3$	23.06	64.30
CaO	66.32	7.23
MgO	1.40	28.20
$CaSO_4$	1.22	0.27
$Ca(OH)_2$	6.37	----

Table 9.7-22. LIME PRODUCTION EMISSION SIZE DISTRIBUTIONS[6]

Production operation emission source	Particle size, micrometers	Weight %, less than stated size
Hammer mill (crusher)	3	30
	5	47
	10	60
	20	74
	40	86
Screening	3	46
	5	72
	10	85
	20	95.8
	40	98.8
Bagging house	5	71
	10	87.3
	20	96
	40	98.8

Table 9.7-23. CONTROL TECHNOLOGIES APPLICABLE TO EMISSION SOURCES IN THE LIME INDUSTRY[40,41]

Emission Source	Control
Kiln	o Fabric filter o ESP o Venturi scrubber o Gravel bed filter o Cyclone o Impingment scrubber
Hydrator	o Wet cyclone o Wet scrubber -- Central wet fan scrubber -- Water sprays in the hydrator stack -- Direct spray scrubbers and condensers o Baghouse
Quicklime screening	o Wet suppression (might impair product quality) o Enclose screens, and vent exhaust to fabric filter o Hoods or covers, and vent to fabric filter
Quicklime or hydrated lime pulverizing with leaks from mill and feed discharge exhaust systems	o Better control of operating parameters and procedures o Improved maintenance
Grinding mills	o Hood and exhaust to fabric filter
Lime product silo vents	o Fabric filter o Fabric "sock"
Packaging quicklime and hydrate lime	o Enclosure; partial or complete o Choked feedsystem o Fixed hoods or covers exhausted to control device o Movable hoods with flexible ducts to control device o Filling spout with outer concentric aspiration duct to fabric filter o Fabric filter (with capture system) o Fabric sock (with capture system)
Materials handling, conveying, transfer	o Refer to Section 5 of Volume 1
Truck; rail, ship, or barge loading of quicklime or hydrated lime	o Enclosure; partial or complete o Choked feed systems o Fixed hoods and covers o Movable hoods with flexible ducts o Filling spout with outer concentric aspiration duct to fabric filter
Plant roads	o Refer to Section 5 of Volume 1

Table 9.7-24 ROTARY LIME KILN EMISSIONS[41]

	Plant					
	B	C	D (1)	D (2)	E	F
Control equipment	Baghouse	ESP	ESP	ESP	Baghouse	Scrubber
ΔP, kPa	1.09	0.5	0.07	0.7	0.6	3.7
Air Cloth ratio m^3/m^2sec	0.5	--	--	--	1.0	--
Specific collection area $m^2/min/m^3$	--	1.06	1.45	1.45	--	--
g/m^3	0.03	0.008	0.03	0.03	0.009	0.04
g/dry standard m^3	0.05	0.016	0.08	0.07	0.013	0.06
kg/hr	6.0	2.5	3.9	3.4	0.7	10.1
kg/Mg of feed	0.111	0.068	0.133	0.141	0.041	0.216

the filter and its velocity is decreased, which results in the dropout of large particles. The medium-sized particles are then removed by cyclonic separation. Finally, the smallest particles are removed by agglomeration as they pass through a filter medium of crushed stone. The clean gas is vented to the atmosphere. Pressure drops on the order of 2.49 kPa are typical for this system.[41]

Lime hydrators are usually controlled by simple scrubbers, most commonly the wet fan type with centrifugal separation. If a fabric filter is to be used, the nearly saturated gas stream must be superheated to avoid condensation. Table 9.7-25 summarizes emission tests of lime hydrators.

Fugitive emissions are controlled by enclosure of the source, or hoods or covers with exhaust ducts connecting to a control device, usually a fabric filter. Wet suppression has limited application because of potential impairment to product quality. Emissions during packaging and loading of lime can be minimized by using a choked-feed system or a gravity-feed fill spout mechanism with outer concentric aspiration ducts to fabric filters.

Emissions from new rotary lime kilns are limited to no more than 0.15 kg/Mg of limestone feed. Emissions from new lime hydrators are limited to no more than 0.075 kg/Mg of lime feed.

9.7.6.3 Secondary Environmental Impact. The reduction of particulate emissions from lime production processes could result in the following secondary environmental impacts:

- Increased solid waste disposal requirements that result from the collection of particulate matter.
- Increased waste water treatment requirements if wet scrubbers are used.
- Increased electrical energy consumption.

Dust collected by electrostatic precipitators, scrubbers, fabric filters, and gravel bed filters represents a solids disposal problem which must be resolved. Some producers recycle the collected dust to the lime kiln while others use the lime dust as a raw material in cement kilns. Other uses for the collected dust are as an agricultural soil conditioner, a fertilizer additive, a metallurgical production aid, and a neutralizing chemical.[41] Wet sludges from scrubbers are dredged from the treatment

Table 9.7-25. LIME HYDRATOR EMISSIONS[41]

Plant	H-A	H-B
Lime feed rate Mg/hr	12.7	12.7
Water feed rate L/mm	106	170
Hydrated lime production Mg/hr	15.4-16.3	15.4
Particulate emissions		
g/dry standard m^3	0.065	0.055
g/m^3	0.029	0.025
kg/hr	0.53	0.43
kg/Mg feed	0.042	0.034

plant settling ponds and disposed of in landfills or in mined out quarries. The wastewater impact of emission control alternatives for lime production plants is minimal or nonexistent if available technologies are fully employed (see Table 9.7-23). Normally, lime plants that use water scrubbers operate closed water systems with total recycle; therefore, zero waste water effluent is achieved.[41]

The energy impact of various control devices is discussed in Section 6 of Volume 1. Energy consumption and solid waste generation factors are presented in Table 9.7-26 for control options applicable to the rotary kiln.

9.7.7 Cement Manufacturing

Cement manufacturing consists of producing complex calcium-silicate-aluminate-ferrite materials which, when mixed with water, form a binding material for aggregates (crushed stone, gravel, and sand) in "concrete." Products include a variety of portland cements, masonry cement, and calcium aluminate cement. The portland cements are dominant in this industry and account for approximately 95 percent of the total volume produced. Masonry cement and calcium aluminate cement account for the remaining 5 percent.[46]

In 1978, 164 cement plants produced 72 Tg of portland cement, and minor quantities of masonry and calcium aluminate cement.[47]

The size of portland cement plants, as gauged by production capacity in 1979, ranged from 50 Gg per year to 2.16 Tg per year.[47] Mean plant production capacity was 480 Gg per year.

Particulate matter is the primary emission in the manufacture of portland cement; it amounted to 208 Gg in 1977 on a nationwide basis.[4]

9.7.7.1 Process Description. Portland cements of several types are manufactured using two processes known as the "dry process" and the "wet process" (see Figure 9.7-18). As of 1973, 36 percent of the plants used the dry process and 62 percent used the wet process, with the remaining 2 percent using both.[48] Recent trends in the industry have been toward increased use of the dry process because it is less energy intensive.

The major steps in the portland cement manufacturing process include:

- Grinding and blending
- Kiln operations
- Finish grinding and packaging

Table 9.7-26. ENERGY CONSUMPTION AND SOLID WASTE PRODUCTION FACTORS FOR CONTROL DEVICES APPLIED TO ROTARY LIME KILNS[23]

Control device	Energy consumption, kilowatt hours per Mg of lime	Solids disposal, kilograms per Mg of lime
Baghouse	5.34	170
High efficiency precipitator	7.03	170
Medium efficiency precipitator	4.87	170
5.5 kPa water scrubber	33.5	211
3.7 kPa water scrubber	23.8	211
2.2 kPa water scrubber	14.2	211
Gravel bed filter	8.9	170

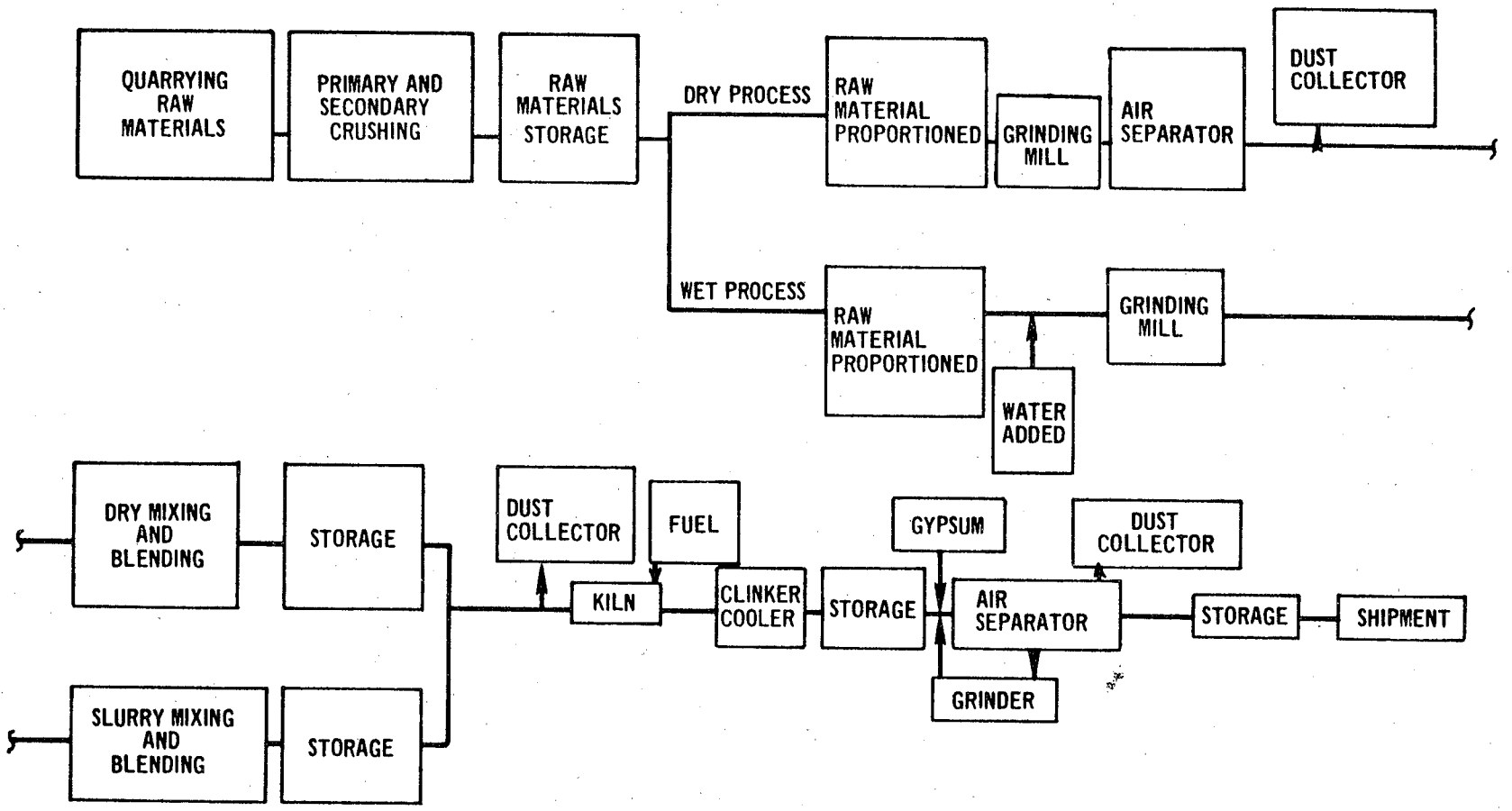

Figure 9.7-18 Basic flow diagram of portland cement manufacturing process.[31]

Cement is made from a combination of calcareous materials (limestone or other calcium carbonate substances), argillaceous materials (clay or similar substances), siliceous materials (sand), and ferrous materials (iron ore). In the dry process, these materials are dried, ground, and mixed in powder form; in the wet process, water is added, and the raw materials are mixed and ground to form a slurry. The dry or wet materials are charged into the upper end of a rotary kiln to be calcined or burned, by heating to approximately 1500°C to form a material called "clinker." After the clinker is discharged from the kiln, it is cooled, mixed with approximately 5 percent gypsum, ground to a fine (size distribution unknown) powder, and packaged for shipment.

Masonry cement is made by mixing crushed limestone and gypsum with clinker and grinding to a fine powder. Calcium aluminate cement is made by fusing a mixture of limestone and bauxite in a kiln and then grinding the kiln product.

9.7.7.2 Emission Characteristics and Applicable Control Techniques. Table 9.7-27 is a computer combined and modeled, size specific, emission data set from the Fine Particulate Emission Information System (FPEIS).[49] Original emission data were from a source test of a gas-fired wet cement kiln operating at 97 to 110% of full capacity. The control device was a wet, hot side, low voltage electrostatic precipitator. Although other data are available within the FPEIS, the data used were determined to be most suitable for this publication.

Sources of dust at cement plants include quarrying and crushing, raw material preparations, grinding and blending (dry process only), clinker production, finishing grinding, and packaging. These sources are listed in Table 9.7-28. Control techniques applicable to process and fugitive emissions from the quarrying and crushing operations, and the preparation of the raw materials are discussed in detail in Section 9.7.1 and Section 5 of Volume 1.

Exhaust gases from the clinker production kiln contain substantial quantities of particulate matter and are generally the largest source of air emissions in the plant. The size distribution of uncontrolled emissions is detailed in Table 9.7-29.[50,51]

Table 9.7-27. SIZE SPECIFIC EMISSIONS FROM A WET CEMENT KILN

	Mass concentration, mg/DNCM (mass percent less than stated size)							
	Total	15.3 μm	12.9 μm	10.1 μm	7.28 μm	5 μm	2.5 μm	1.01 μm
Uncontrolled	2.02 E7[a]	1.76 E4 (80.9)	1.65 E4 (76.1)	1.48 E4 (68.3)	1.25 E4 (57.5)	1.0 E4 (45.8)	6.0 E3 (27.8)	1.12 E3 (5.18)
Controlled	67.4	68(100)	67.7(100)	67.1(99.5)	66.7(98.9)	67.7(98.9)	63.1(93.7)	14.1(20.9)
Efficiency, percent	99.6	99.6	99.6	99.5	99.5	99.3	98.9	98.7

[a]E7 means 10^7, etc.

Table 9.7-28. SOURCES OF AIR EMISSIONS IN CEMENT MANUFACTURING PLANTS[46]

1. Preparation of raw materials	a. Drilling b. Blasting c. Loading broken rock d. Transporting or conveying to cement plants
2. Crushing operations	a. Unloading rock from quarry b. Crushing rock c. Screening rock d. Conveying to and from storage e. Storage
3. Preparation of raw materials	a. Drying operations b. Conveying and feeding to grinding circuit c. Grinding of raw materials and conveying of ground material (dry process)
4. Kiln operation	a. Feeding raw material to kiln(s) -- dry process b. Gases exhausted from kiln(s)
5. Clinker cooling	a. Excess air exhausted from clinker cooler(s) b. Conveying clinker from cooler(s) to finish-grinding mill(s)
6. Finish grinding	a. Conveying clinker from storage to finish-grinding mill(s) b. Finish grinding of clinker, gypsum, and additives c. Air classification of finished product and conveying to storage d. Storage e. Bulk loading operations

Table 9.7-29. SIZE DISTRIBUTION OF DUST EMITTED FROM KILN OPERATIONS WITHOUT CONTROLS[50,51]

Particle size micrometers	Kiln dust finer than corresponding particle size, %
60	93
50	90
40	84
30	74
20	58
10	38
5	23
1	3

The cement industry uses mechanical collectors, electrostatic precipitators, gravel bed and fabric filter collectors, or combinations thereof, depending upon the operation and exhaust gas temperatures. Although high-energy wet collectors (venturi scrubbers) are used in several plants, they are not generally used in the portland cement industry.[52]

The distribution of kiln dust collection equipment in 101 cement plants surveyed in 1975 is shown in Table 9.7-30. The effectiveness of the listed control devices is dependent on the characteristics of the gas stream and the particulate matter--specifically the size of the particles, the moisture content of the gas, the resistivity of the dust, and the concentration and composition of the dust. Mechanical collectors are not effective on submicrometer particles and, therefore, are used only as a precleaner to a fabric filter or ESP. The dust collected by these precleaners is recycled to the kiln when its chemical composition does not alter that of the final product. Table 9.7-31 contains a summary of compliance test data for various processes and control technologies.[53]

When baghouses are used to control dry process kilns, gas temperatures are of primary concern. Kiln exhaust gases must be cooled to at least 315°C before entering fabric filters. Glass and Nomex(R) fabrics, which withstand 290°C and 230°C, respectively, are the most commonly used materials for bags. Higher temperatures accelerate the aging of bag fabrics.[52]

When either electrostatic precipitators or fabric filters are used on wet-process kilns, extensive thermal insulation must be provided to prevent condensation of water vapor within the device. Although some precipitators are specified to withstand a maximum temperature of 370°C, the usual operating range is 150 to 260°C. Wet-process kiln gases exhibit the proper moisture and temperature characteristics for effective electrostatic precipitation.[54] Water conditioning improves particle resistivity in dry kilns, and reduces the temperature. Several preheater installations utilize the kiln exhaust gases to dry the raw material. This increases the moisture content of the gas and reduces its temperature. Fabric filters applied to kilns are designed with filtering velocities of:

0.37 to 0.46 m/min	reverse air cleaning
2.1 to 3.0 m/min	for pulse jet cleaning
0.61 to 0.91 m/min	for mechanical shaker cleaning

Table 9.7-30. DISTRIBUTION OF KILN DUST COLLECTION SYSTEMS IN WET AND DRY PROCESS CEMENT PLANTS[31]

	Type of process and number of plants	
Kiln-dust collection system	Wet	Dry
Single dust collector		
Cyclones	2	2
Precipitators	31	3
Baghouses	3	3
Wet scrubbers	1	0
Settling chamber	1	0
Combinations of dust collectors		
Precipitators and wet scrubbers	1	0
Cyclones and wet scrubbers	1	0
Cyclones and precipitators	14	12
Cyclones and baghouses	4	16
Cyclones, baghouses, and precipitators	2	2
Baghouses and precipitators	1	1
Baghouses and wet scrubbers	0	1

Table 9.7-31. ANALYSIS OF PORTLAND CEMENT PLANT COMPLIANCE TEST DATA[53]

Variable	Number of tests	Particulate emissions, kg/Mg feed: Minimum	Particulate emissions, kg/Mg feed: Maximum	Statistic: Mean, kg/Mg feed	Statistic: Standard error	Statistic: Standard deviation	NSPS
Dry process							
ESP	8	0.021	0.125	0.061	0.012	0.033	0.15
Baghouse	10	0.013	0.123	0.070	0.013	0.041	
Wet process							
ESP	6	0.020	0.142	0.084	0.021	0.051	
Baghouse	4	0.049	0.132	0.091	0.021	0.043	
All processes							
ESP	14	0.020	0.142	0.070	0.011	0.041	
Baghouse	14	0.013	0.132	0.076	0.011	0.041	
All controls							
Dry process	18	0.013	0.125	0.066	0.009	0.037	
Wet process	10	0.020	0.142	0.087	0.014	0.046	
All kiln data	28	0.013	0.142	0.073	0.008	0.040	
Clinker cooler							
Baghouse	16	0.005	0.061[a]	0.022	0.004	0.016	0.05
Gravel bed	3	0.023	0.045	0.034	0.006	0.011	
Wet scrubber	1	0.022	0.022	-	-	-	
All controls	20	0.005	0.061	0.024	0.003	0.015	

[a]A single compliance test shows 0.061 kg/Mg. The EPA states that the source is in compliance.

Electrostatic precipitators are designed for a drift velocity of 0.061 to 0.091 m/s.[55]

The clinker cooler is the second largest air pollution source in cement plants. Because of the relatively small particle size of this dust, fabric filters, electrostatic precipitators, and granular bed filters are used.[56] Granular bed filters are popular because of their cost, relatively low maintenance requirements, and ability to withstand higher temperatures than conventional fabric filter collectors and electrostatic precipitators.[57]

There are numerous other particulate emission sources within a cement manufacturing facility, although they are less significant than the kiln or clinker cooler. Baghouse collectors appear to be most frequently used to control emissions from these various sources. Advantages and disadvantages of the use of various control devices on these sources as well as on the kiln and clinker coolers are given in Table 9.7-32.

For dust control from emission points other than the kiln, most techniques involve the capture of dust by drawing ambient air through a hood or enclosure. To assure capture of the particles, an air intake velocity of 1.0 to 1.25 m/s is required. The dust-laden air is ducted to dust collectors. To prevent dust from falling out within the capture and transport system, an air velocity of above 18 m/s, and preferably about 20 to 23 m/s, should be maintained.[46]

Fugitive emissions from materials handling, storage, and loading and unloading operations can be reduced by using a variety of controls. These include enclosures and hoods ducted to dust collectors, sprinkling systems for dust suppression (using water, foam, or chemicals), improved handling techniques, better housekeeping, and combinations of these and other controls. Plant roads can be paved, watered or oiled, treated with chemicals, or swept regularly to minimize dust reentrainment. For additional details on fugitive emission control techniques, see Section 5 of Volume 1.

9.7.7.3 Secondary Environmental Impacts. Disposal of collected dust creates a major solid waste problem. Dust with a high alkali content cannot be recycled into the cement manufacturing process and therefore must be disposed of. Proper disposal methods are needed to avoid potential ground water contamination by the leaching of alkaline salts. The collected kiln

TABLE 9.7-32. ADVANTAGES/DISADVANTAGES OF CONTROL DEVICES FOR VARIOUS CEMENT MANUFACTURING OPERATIONS[52]

Operation	Mechanical collectors	Fabric filters	Electrostatic precipitators
Quarrying	Not applicable	Not applicable	Not applicable
Crushing and grinding	Not applicable	Very good	Not economically feasible; low flow volumes
Raw material storage	Not applicable	Very good	Not economically feasible
Integral preheater and kiln	Integral part of preheater countercurrent gas and material flow; high energy controls necessary to meet opacity requirements	Very good; must contend with temperature reduction, dewpoint	Very good, if gas stream is properly conditioned
Kiln	Used as precleaners for high energy devices	Very good; must contend with temperature reduction, dewpoint	Very good; must contend with dewpoint particle resistivity, and explosion potential problems
Clinker cooler	Used as precleaners for high energy devices	Very good; must contend with abrasive particulate gravel-bed filters recently introduced	Precipitator design must contend with combination of clinker dust and moisture, possibly coating ESP interior with cement
Finish grinding	Cannot meet opacity requirements	Very good	Very good on large mills
Finished material storage	Cannot meet opacity requirements	Very good	Not economically feasible; low air flow volumes
Packaging and shipping	Cannot meet opacity requirements	Very good	Not economically feasible; low air flow volumes

dust may be used as a substitute for agricultural limestone, fertilizer, or mineral filler. Alternatively, the dust is often hauled to landfill sites or abandoned quarries or storage piles. The piles of dust should be protected from erosion by using covers or enclosures, or spraying with water to form a surface crust.

9.7.8 Concrete Batching

Concrete batching involves the proportioning of sand, gravel, and cement by means of weigh hoppers and then conveyed into a mixing receiver such as a transit mix truck. The required amount of water is also discharged into the receiver along with the dry materials. In some cases, the concrete is prepared for on-site building construction work or for the manufacture of concrete products such as pipes and prefabricated construction materials.

Particulate emissions consist primarily of cement dust, but some sand and aggregate gravel dust emissions do occur during batching operations. There is also a potential for dust emissions during the unloading and conveying of concrete and aggregates at these plants and during the loading of dry-batched concrete mix. Another source of dust emissions is the traffic of heavy equipment over unpaved or dusty surfaces in and around the concrete batching plant. In 1977, nationwide particulate emissions amounted to 15 Gg.[4]

9.7.8.1 Process Description and Emission Control Techniques. Concrete batching plants store, convey, and measure the materials to make concrete; they then blend them and transfer the mixture to trucks for shipment. There are three types of plants--wet batching, dry batching, and central mix plants. They all receive, store, transfer, and blend the solid raw materials in similar ways, but they add water to the mix at different points in the process. The average plant will produce 59 Gg of concrete per year.[31]

Crushed and sized raw materials are delivered to the plant by truck or rail, and then transferred to elevated storage silos and bins. Cement is usually transferred pneumatically or, less frequently, by bucket elevator, while sand and aggregate are conveyed by belt conveyor or bucket elevator. The raw materials are weighed by a weigh hopper to proportion the proper amounts for mixing. In the wet batching plant, the sand, aggregate, and cement are mixed with water, and then poured into transit mix trucks which mix the concrete on the way to the site where it will be used. In dry batch

plants, the dry mixture of aggregate and cement is transferred in flat bed trucks to paving machines at the site, where water is then mixed in. Most plants that do dry batching also do wet batching. A central mix plant makes wet concrete in a central mixer, and transfers it by open bed dump trucks to the job site. A process flow diagram showing emission points is presented in Figure 9.7-19.

Particulate matter is emitted in significant quantities from the receiving and conveying of cement, sand, and aggregates and from the load-out of concrete.[32] Fugitive dust can be emitted from the following points:

- o Sand and aggregate storage piles on the ground
  - -- loading onto the pile
  - -- vehicular traffic
  - -- loading out from the pile
  - -- wind erosion of the pile
- o Transfer of sand and aggregate to elevated bins
- o Cement unloading to elevated storage bins
- o Weigh hopper loading of cement, sand, and aggregate
- o Mixer loading of cement, sand, and aggregate (at a central mix plant)
- o Loading of transit mix trucks (at a wet-batching plant)
- o Loading of batch truck (at a dry-batching plant)
- o Plant roads

In a wet batching plant, almost all the dust generated is cement dust, since most of the sand and aggregate is damp. However, dry light aggregates create considerable dust when handled. Typically, between 10 and 20 percent by weight of the dust is less than 5 micrometers in size, depending on the grade of the cement.[58] The dust that dry batching plants generate has similar characteristics.

The extent of emissions and control methods vary with the type of plant and the characteristics of the aggregate used. Dust can be controlled by preventive procedures and operating changes, or by capture methods using hoods and covers, and then venting to dust removal equipment.

The amount of dust emitted during the transfer of sand and aggregate depends on their moisture content. Wet suppression with water sprays

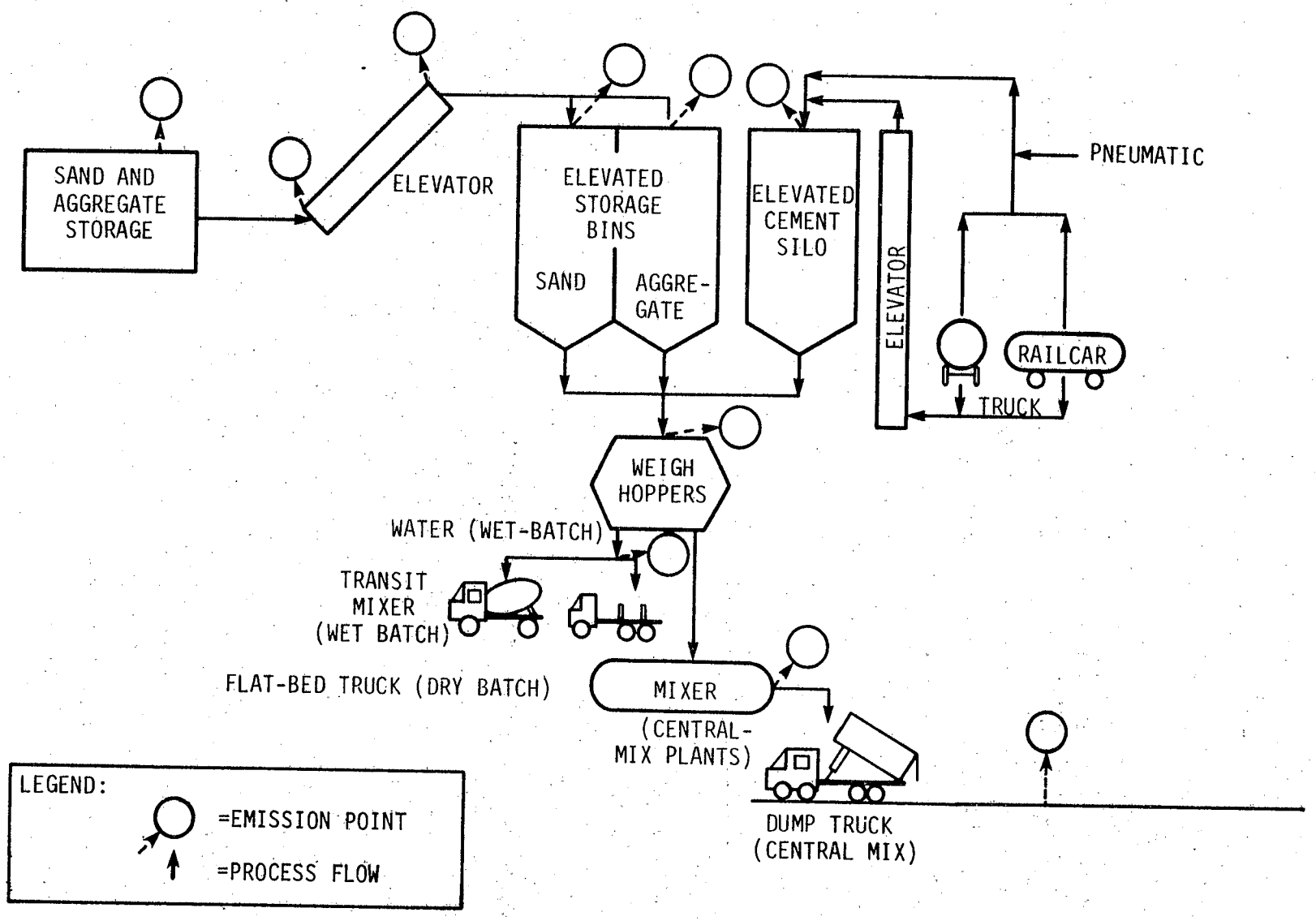

Figure 9.7-19 Process flow diagram for concrete batching showing potential industrial process fugitive particulate emission points.[7]

temporarily prevents dusting. Conveyors and transfer points used during the loading of the mixer can be enclosed to prevent dust loss. Using a pneumatic transfer system, rather than bucket conveyors, eliminates emissions during the transfer of cement to storage silos. Fabric filters or fabric "socks" are used to control dust discharged through cement silo vents. The filter on these vents is made of cotton sateen with a filtering velocity of approximately 0.91 meters/minute. This same filtering rate can be used in fabric filters applied to the weigh hopper and dry batching or central mix plant mixers.[59]

Fugitive emissions can be controlled by using movable or fixed hoods over the discharge end of the mixer or over the receiving hopper of a truck or weigh hopper. The collected dust can then be vented to a fabric filter or scrubber. See Section 5 of Volume 1 for additional details regarding fugitive dust control techniques. A summary of the controls applied to the emissions sources within a concrete batching plant is given in Table 9.7-33.

9.7.9 Asphalt Concrete Plants

Asphalt and crushed stone (aggregate) are combined at asphalt hot-mix plants to form asphaltic concrete, which is used in the paving of highways, streets, and parking surfaces. As of April 1977, there were 4539 asphalt concrete plants distributed throughout the United States; approximately 60 percent of these plants were stationary and the remaining portion were portable plants.[60] National production is approximately 270 Tg per year, with a continued increase in use projected for the future. Types of plants include batch-mix (90.8 percent), continuous mix (6.6 percent), and dryer-drum mix (2.6 percent).[2] Typical plants produce between 45 and 320 Mg/hr of hot mix, and operate 1200 hr/yr.[58,60]

Condensed hydrocarbons (asphalt fumes) and mineral aggregate dust are both emitted during asphalt concrete batching. Nationwide emissions in 1977 have been estimated at 136 Mg/year.[4] The size of the mineral particles ranges from submicrometer to approximately 100 micrometers, the precise range depending on the type of aggregate being used. Crushed limestone, sandstone, ore tailings, basalt, granite, sands, and gravels can all be used. In most cases, the emitted particles are less than 74 micrometers, of which 10 to 50 percent are less than 5 micrometers.

Table 9.7-33. EMISSION SOURCE CONTROLS[58,59]

Emission source	Control
1. Sand and aggregate storage	(Refer to Chapter 5 of Volume 1 for discussion of controls for storage piles.)
2. Transfer of sand and aggregate to elevated bins	o Wet suppression with water of the feed, transfer, and discharge points o Enclose partially or completely the conveyor system o Exhaust dust laden air from transfer points to fabric filter o Maintain conveyor equipment to prevent leaks
3. Cement transfer to elevated storage silos, and silo vents	o Enclose bucket elevators o Maintain conveyor equipment o Use pneumatic transfer o Fabric filters on cement silo vents o Fabric sock on cement silo vents
4. Weigh hopper loading of cement, sand, and aggregate	o Fixed hoods, curtains, partitions, or covers (canvas shroud) o Fabric filter o Scrubber o Vent the displaced air to the storage bins and silo, or vent it to a central collecting system (filter)
5. Mixer loading of cement, sand, and aggregate (central mix plant)	o Movable hoods with flexible ducts o Fabric filter o Scrubber
6. Loading of transit mix truck (wet batching)	o Enclose the rear of the mixer with a shroud o Fixed hoods, curtains, partitions or covers o Movable hoods with flexible ducts which enclose the receiving hopper o Fabric filter o Scrubber
7. Loading of flatbed truck (dry batching)	Same types of controls as wet batch loading
8. Plant roads	(Refer to Chapter 5 of Volume 1 for discussion of controls for plant roads.)

9.7.9.1 Process and Emission Control Techniques. Asphalt hot-mix production consists of mixing a combination of aggregates with liquid asphalt. The asphalt plant is used to heat, mix, and combine the aggregate and asphalt in measured quantities to produce the required paving mix. Figure 9.7-20 gives a detailed process and materials flow diagram for a representative 159-Mg/hr asphalt concrete plant.

Aggregate of appropriate mix is fed into a rotary dryer (Stream 1) at a controlled rate. The aggregate, generally composed of locally available material, will contain both coarse-sized crushed rock and fines. The rotary dryer is an inclined rotating cylinder (usually employing oil or gas as fuel) into which the aggregate is fed at the raised end and discharged at the lower end.

As the aggregate leaves the dryer, it drops into a bucket elevator and is transferred to a set of vibrating screens where it is classified by size. The classified hot materials then enter the mixing operation. After all the material is weighed, the sized aggregates are dropped into a mixer and dry mixed for about 30 seconds. The asphalt, which is solid at ambient temperatures, is pumped from heated storage tanks, weighed, and then injected into the mixer. The hot mixed batch is then dropped into a truck and hauled to the job site.

The rotary dryer is the principal process point source of particulate emissions in a hot-mix asphalt plant (Stream 2). The vibrating screens, bins, weigh hopper, and mixer are also emission sources that need to be controlled. These areas are normally enclosed and the dust emitted is carried by ventline to the control system (Stream 7A or 7B). Typical exhaust gas and stack characteristics are listed in Table 9.7-34.[61] Fugitive dust emissions arise from fine aggregate stockpiles, loading operations, cold storage bins, the cold aggregate conveyor, and truck traffic. These emissions are caused by natural elements, poor housekeeping, exposed aggregate stockpiles and storage bins, and uncontrolled traffic conditions. For a discussion of fugitive particulate control methodologies, see Section 5 of Volume 1.

Table 9.7-35 lists uncontrolled size specific emissions from a rotary dryer at an asphalt batching plant operating at 136 to 159 Mg/hr (150 to 175 Tons/hr). This computer modeled data from the FPEIS was derived from source test results of one plant.[62]

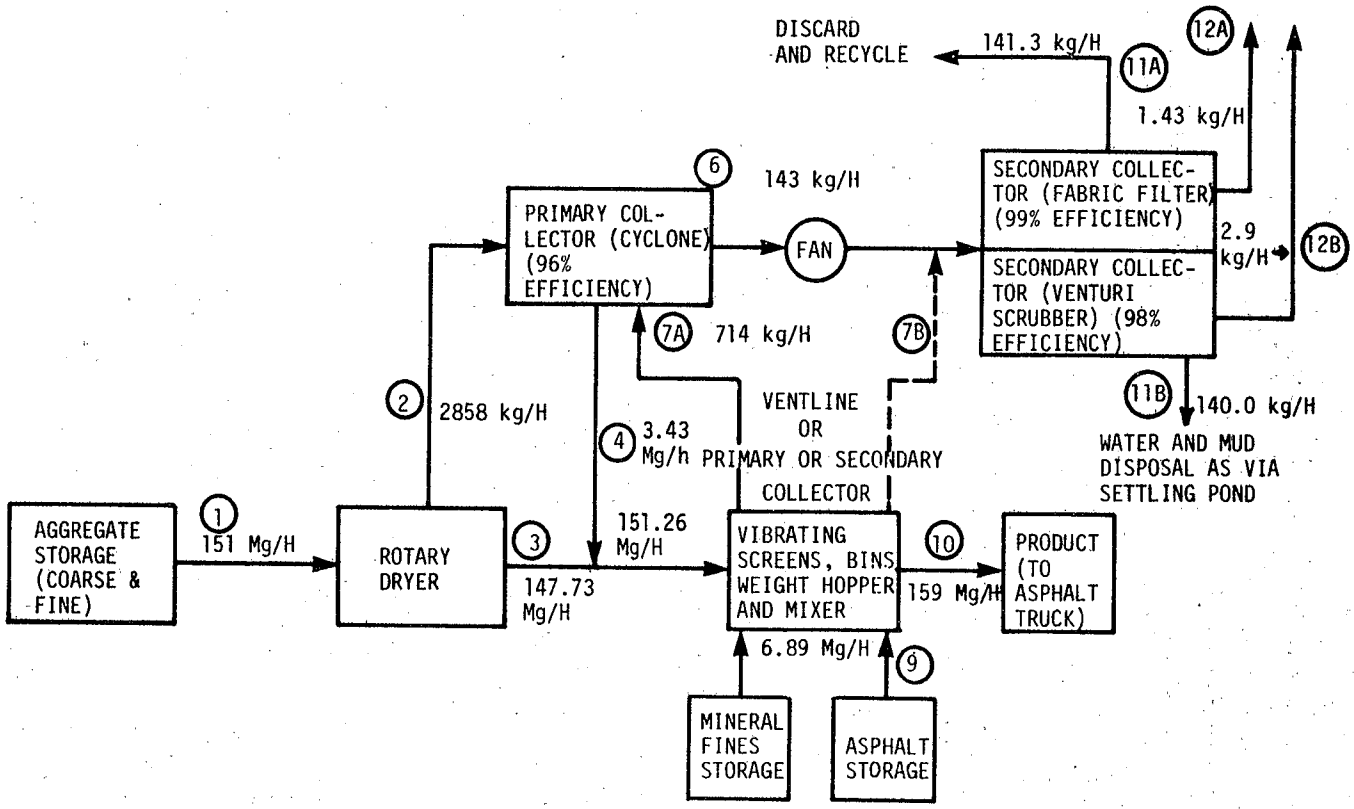

Figure 9.7-20 Material flow for representative 159-Mg/hr asphalt concrete plant.[57]

Table 9.7-34. ASPHALT CONCRETE PLANT EXHAUST GAS AND STACK CHARACTERISTICS FOR THE ROTARY DRYER[61]

Stack parameters	
Number of sources	2825
Average stack height, m	10.2
Average stack diameter, m	1.5
Average stack gas temperature, °C	93
Average gas flowrate, A m^3/s	16.7

Table 9.7-35. SIZE SPECIFIC EMISSIONS FROM A ROTARY DRYER ASPHALT BATCHING PLANT[62]

	Mass concentration, mg/DNCM (mass percent less than stated size)							
	Total	15.3 μm	12.9 μm	10.1 μm	7.28 μm	5 μm	2.5 μm	1.01 μm
Uncontrolled	55500	6220(11.2)	4560(8.2)	3390(6.1)	2170(3.9)	1300(2.4)	401(0.7)	112(0.2)

A single control system is typically used to control emissions from the rotary dryer, vibrating screens, storage bins, weigh hopper, and mixer. This system usually consists of a product recovery collector (primary) followed by a secondary collector. An individual survey of the asphalt hot-mix industry indicates that the primary collectors preferred are usually dry collectors. Table 9.7-36 lists the types of primary and secondary collectors and the extent of industry usage.[63] Table 9.7-37 is a summary of tests showing the capabilities of these collectors.[64]

The primary collectors usually employed to control emissions from the rotary dryer and sometimes from the mixing operations, have relatively low efficiencies for particles less than 20 to 30 micrometers. Therefore, a primary collection alone will not suffice to meet current New Source Performance Standards (NSPS),[a] but may be used to facilitate the recycling of larger particles and to improve the performance of the secondary control system.[60] A secondary control device of the type specified in Figure 9.7-20 is usually necessary for meeting current NSPS.

Wet scrubbers used in the asphalt concrete industry consist of:

- Gravity spray towers
- Cyclonic scrubbers
- Centrifugal fan wet scrubbers
- Venturi scrubbers
- Orifice scrubbers

As with most wet scrubbers, those with low pressure drops also are characterized by low efficiencies. Higher efficiencies can be achieved by increasing the power input and to some extent the liquid to gas ratio.[65]

Fabric filters are considered by many to be the most effective particulate control device for this application. The fabric filters commonly used are of the pulse-jet type, utilizing compressed air to sharply reverse the air flow for bag cleaning. These fabric filters use typical filtering velocities of about 2 M^3/min of air per square meter of cloth.

---

[a]The NSPS requires emissions of no greater than 0.04 grains/dscf, and opacity at the stack of no greater than 20%.

Table 9.7-36. PRIMARY AND SECONDARY CONTROL DEVICES USED IN THE ASPHALT HOT MIX INDUSTRY[63]

Type of control equipment	Percent of industry
Primary collectors	
Settling or expansion chambers	4
Centrifugal dry collectors	58
Multicyclones	35
Other	3
Secondary collectors	
Gravity spray tower	8
Cyclone scrubber	24
Venturi scrubber	16
Orifice scrubber	8
Baghouse	40
Other	3

Table 9.7-37. HOT MIX ASPHALT CONCRETE PLANTS[64]

Plant	A_1[a]	A_2[a]	B[a]	C[a]	D[a]	E[a]	H_1[a]	H_2[a]	I[a]	J[a]	K[a]	L[b]	M[b]
Design capacity	120	120	300	200	240	180	240	--	120	--	--	--	--
Production rate	99.7	115	212.3	125.5	222.5	--	180	200	--	--	120	200	153
Fuel	oil	gas	oil	oil	gas	gas	oil	oil	gas	--	oil	--	--
Particulate emissions													
Probe & filter catch													
g/DHCM (gr/dscf)	0.153 (0.0067)	0.048 (0.021)	0.019 (0.0081)	0.039 (0.017)	0.041 (0.0178)	0.043 (0.0189)	0.072 (0.0315)	0.025 (0.011)	0.057 (0.025)	0.023 (0.01012)	0.247 (0.108)	0.016 (0.0072)	0.098 (0.043)
g/ACM (gr/acf)	0.0101 (0.0044)	-- --	0.010 (0.0044)	0.032 (0.014)	0.024 (0.0104)	0.0247 (0.0108)	0.0588 (0.0257)	-- --	-- --	-- --	-- --	-- --	-- --
Kg/hr (lb/hr)	0.43 (0.94)	1.27 (2.8)	0.66 (1.46)	2.44 (5.37)	1.65 (3.64)	1.59 (3.51)	3.33 (7.35)	-- --	2.93 (6.45)	1.07 (2.362)	8.35 (18.4)	0.794 (1.75)	3.05 (6.735)
Total catch													
g/DNCM (gr/dscf)	0.0497 (0.0217)		0.132 (0.0575)	0.041 (0.018)	0.206 (0.0899)	0.0617 (0.027)	0.163 (0.0713)	0.050 (0.022)	0.059 (0.026)	-- --	-- --	-- --	-- --
g/ACM (gr/acf)	0.0323 (0.0141)		0.0684 0.0299	0.037 (0.016)	0.120 (0.0524)	0.0345 (0.0151)	0.133 (0.0582)	-- --	-- --	-- --	-- --	-- --	-- --
Kg/hr (lb/hr)	1.37 (3.02)		4.57 (10.07)	2.58 (5.68)	8.37 (18.45)	2.31 (5.10)	7.66 (16.88)	2.29 (5.05)	3.06 (6.75)	-- --	-- --	-- --	-- --
Control device	FF[c]	FF	FF	Venturi (5 kPa)	FF	FF	Venturi (4.6 kPa)	Venturi (4.9 kPa)	Venturi (6.5 kPa)	FF	FF	FF	FF

[a]Tests used to support a new source performance standard.
[b]Inspection of dust collectors showed evidence of poor maintenance or operation.
[c]Fabric filter.

Fabrics currently used within the asphalt hot mix industry include glass yarns treated with lubricants such as silicone to prevent fibers from breaking due to self-abrasion during flexing (good for continuous operation up to 260°C), polyesters (maximum temperature of 132°C), Nomex(R)-type nylon (good for temperatures up to 234°C), and glass/Nomex(R) web on a Nomex(R) scrim. Exhaust gases from the dryer contain large quantities of water vapor within the 121° to 177°C temperature range. As a consequence, the fabric filter unit should be insulated so that the exhaust gas remains above the dew point.

Several process modification techniques can also be used to reduce emissions from the aggregate dryer. Since particle entrainment in the exhaust air stream is due in part to the air stream velocity, reducing this velocity decreases uncontrolled particulate emissions. Another method that is becoming increasingly popular is dryer-drum mixing. In this technique, atomized asphalt is sprayed onto the undried, cold aggregate. The mixture is then dried and mixed in a rotary dryer. Emissions are reduced since the asphalt coats the aggregate particles, preventing them from becoming airborne. Fabric filters used to control emissions from this process must be designed to withstand high temperatures to avoid asphalt clogging.

9.7.9.2 Secondary Environmental Impacts. In addition to the reduction of particulate emissions due to the application of control equipment, there are the following principal environmental effects:

- Solid waste disposal
- Water pollution concerns if wet scrubbers are used
- Increased electrical energy consumption

Approximately 50 percent of the solids collected by dry collection devices can be recycled directly to the asphalt concrete mixing process; disposal must be made of the rest.[60] All of the particulate matter collected by wet scrubbers is in such a form that disposal must be made of it. The most common disposal method for wet scrubber effluent is to divert the effluent to settling ponds.

9.7.10 Asphalt Roofing Plants

The asphalt roofing industry manufactures asphalt-saturated felt rolls, shingles, rolls with surface mineral granules, and smooth rolls that may contain a small amount of surface mineral dust or mica. While most of these products are used in the construction of roofs, a relatively small number are used in walls and in other building applications. In 1977, 8.6 Tg of asphalt and tar roofing products were produced. In 1978, there were 118 asphalt roofing plants scattered throughout the United States.[66]

Asphalt shingles are prepared by: (1) impregnating roofing felt with an asphalt saturant; (2) coating both sides of this product with a harder, rougher asphalt; (3) embedding mineral granules into one side of the surface; and (4) cutting the surface into strips or shingles. Regardless of the weight of the asphalt saturant, the product is approximately 40 percent percent dry felt and 60 percent saturant when it leaves the saturator.[67]

Particulate emissions from the asphalt roofing industry emanate from two primary sources: aspahalt blowing stills and saturators. Blowing stills are used to dehydrogenate the liquid asphalt. The progressive loss of hydrogen results in polymerization of the asphalt to a desired consistency. Saturators consist of dip tanks and sprayers where the saturant is applied to the felt.

Particulate emissions from the asphalt roofing industry in 1977 were estimated to be 21 Gg.[4] Figure 9.7-21 shows the size distribution of particulate matter from the uncontrolled saturator exhaust. Minimal data are available to characterize emissions from the blowing stills; however, such emissions emanate at higher temperatures (94° to 153°C) and at higher mass loadings than saturator emissions. Opinions have also been expressed that the asphalt emissions from air blowing are of a more tar-like nature than those from saturator operations.[68]

9.7.10.1 Process Description. Asphalt flux is the "bottom" material from the petroleum refining process. It can consist of the residues from a single crude or from a blend of many crudes. A number of products are produced for the asphalt roofing industry; the principal products, however, are the "saturant" asphalt and "coating" asphalt used in the production of asphalt roofing and siding. The main difference in these two asphalts is

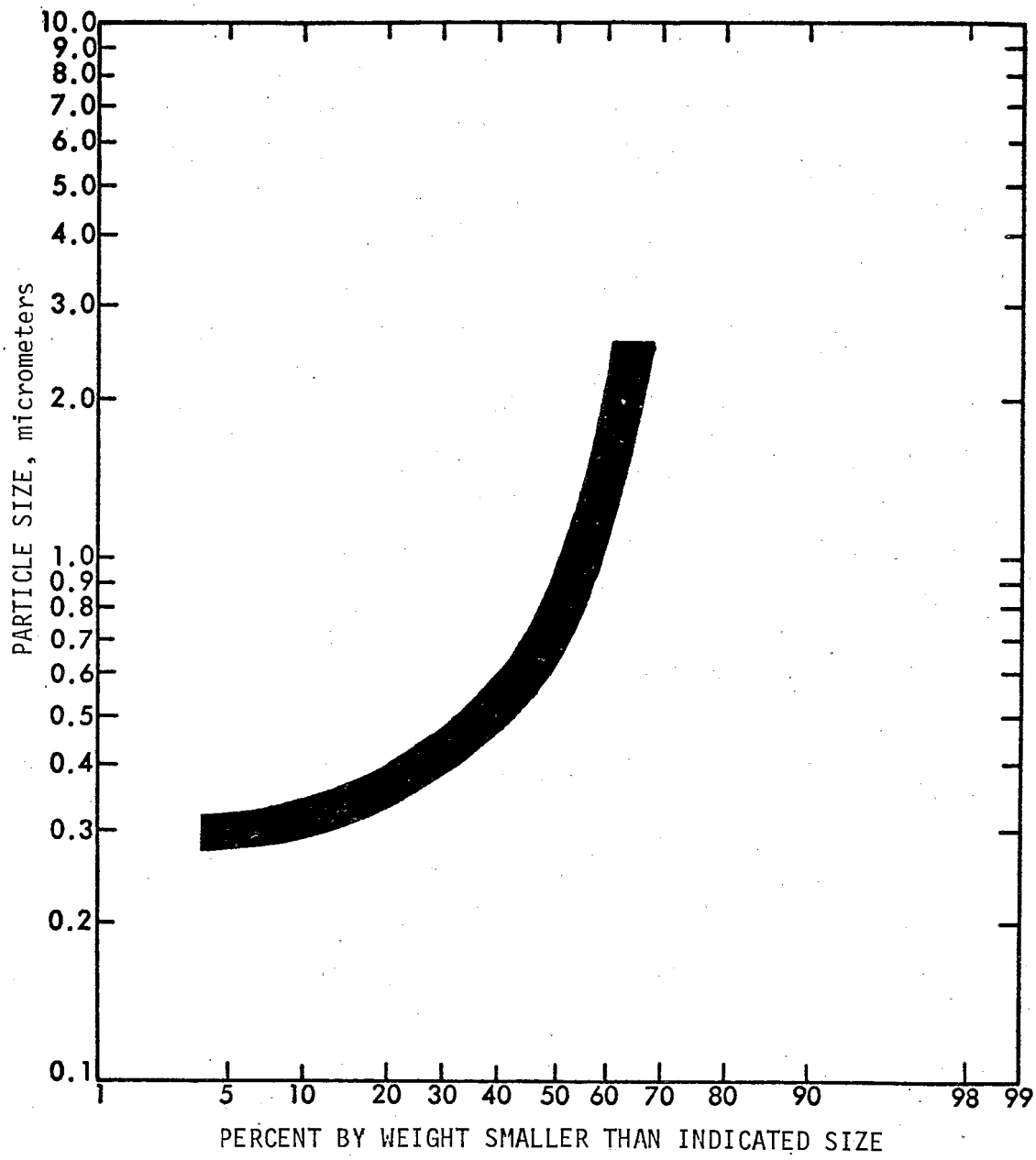

Figure 9.7-21 Particle size distribution in uncontrolled saturator exhaust.[63]

their softening point. Saturants usually have a softening point between 40° and 74°C (104° and 165°F), while coating asphalts soften at about 110°C (230°F).

Asphalt is blown with air in an asphalt blowing still (Figure 9.7-22), which is a tank fitted near its base with a sparger (air lines in a spider arrangement). Air blown through the sparger rises through the asphalt, participating in an exothermic oxidation reaction. Oxidizing the asphalt has the effect of raising its softening temperature, reducing penetration, and modifying other characteristics. Sometimes catalysts are added to assist in this transformation. The time required for airblowing asphalt depends on a number of factors, including the characteristics of the asphalt flux, the characteristics desired for the finished product, the reaction temperature, the type of still used, the air injection rate, and the efficiency with which the air entering the still is dispersed throughout the asphalt. Blowing times may vary in duration from 30 minutes to 12 hours.

Asphalt blowing is a highly temperature-dependent process because the rate of oxidation increases rapidly with increases in temperature. Asphalt is preheated to a range of 204° to 243°C (400° to 470°F) before blowing is initiated to assure that the oxidation process will start at an acceptable rate. Asphalt temperature is normally kept at about 260°C (500°F) during blowing by spraying water onto the surface of the asphalt; however, external cooling may also be used to remove the heat of reaction. The allowable upper limit of the reaction temperature is dictated by safety considerations, with the maximum temperature of the asphalt usually kept at least 28°C (50°F) below the flash point of the asphalt being blown. Vertical stills, because of their greater head (asphalt height), require less air flow for the same amount of asphalt-air contact. Both vertical and horizontal stills are still in use, but where new design is involved, a vertical type is preferred by the industry because of the increased asphalt-air contact and consequent reduction in blowing times. Asphalt losses from vertical stills are also reported to be less than those from horizontal stills. All recent blowing still installations have been of the vertical type. Asphalt blowing can be either a batch process or a continuous operation. All stills at roofing plants are believed to use the batch process, as do most of the asphalt processing plants, but the ratio among refineries is unknown.

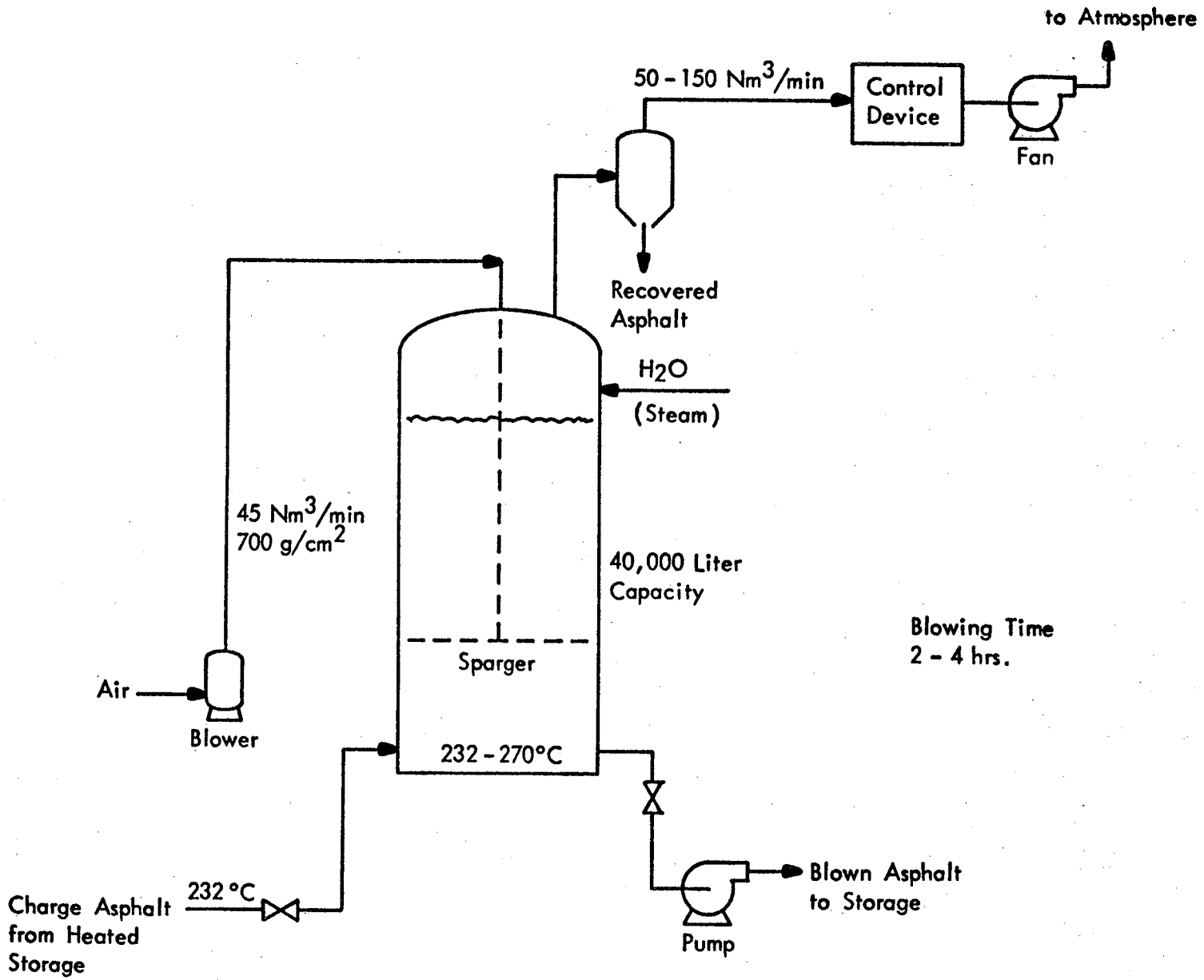

Figure 9.7-22 Schematic diagram of vertical asphalt blowing still.[63]

The emissions from the blowing still are primarily organic particulates with a fairly high concentration of gaseous hydrocarbons (6,000 to 7,000 ppm) and polycyclic organic matter [112,308 g/Nm^3 (0.00007 lb/ft^3)]. The blowing still has the highest total emissions of any of the emissions sources in an asphalt roofing plant.

Figure 9.7-23 illustrates a roofing line. Roofing lines contain saturator dip tanks or sprays, or both, where the saturant is applied to felt. The saturated felt then passes through a drying-in section (wet looper), followed by a coating operation where coating asphalt is applied to both sides of the saturated felt. Although mechanical problems or breakage of the felt may cause intermittent shutdowns of the roofing line, it is essentially a continuous operation.

These saturating, drying-in, and coating operations may be partially or totally enclosed, with air and fumes being exhausted from the enclosure to a control device (or directly to the atmosphere). The volume of gas exhausted is on the order of 560 Nm^3/min and consists primarily of air, water vapor, asphalt liquid droplets (fumes), and gaseous hydrocarbons.

Several parameters that affect the emission rate from the saturation process include in-draft air and hooding arrangements, characteristics of the asphalt and felt, variations in the spraying/dipping process, line speeds, and temperatures.

9.7.10.2 Control Techniques. Within the asphalt roofing industry, approximately 40 percent of the plants do their own asphalt blowing; the remainder buy their asphalt from refineries or asphalt processing plants.[68] All such plants which have blowing stills and were contacted by EPA were found to use some form of emissions control. Fumes are either ducted to a direct-fired process heater or to an afterburner.[68]

Major control systems presently used in the asphalt roofing industry include afterburners (or fume incinerators), high velocity air filters (HVAFs), electrostatic precipitators, and wet scrubbers. A breakdown of control device usage from a survey of 76 asphalt roofing plants is summarized in Table 9.7-38. Results of particulate emission test data from plants tested by EPA are summarized in Table 9.7-39.

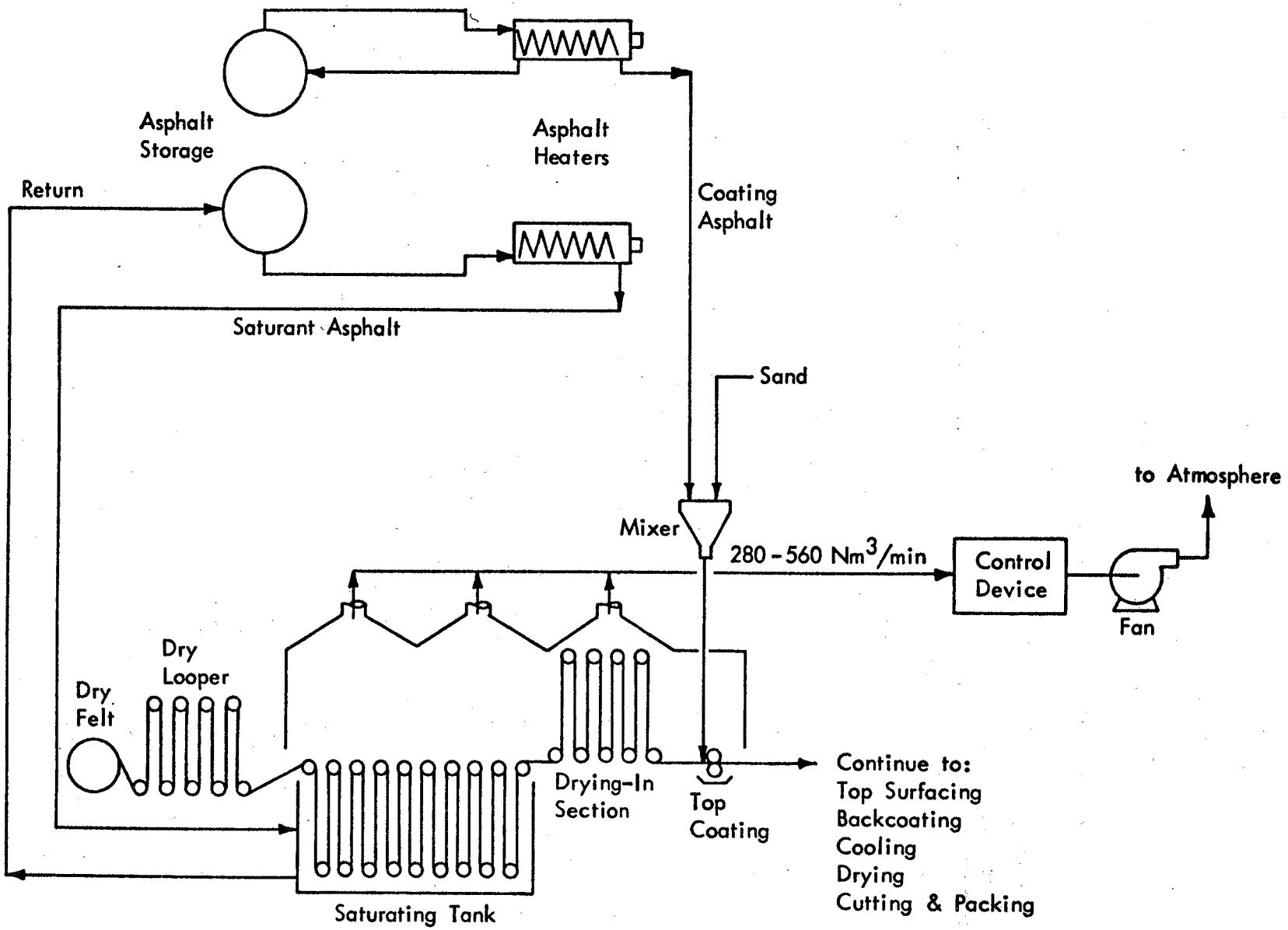

Figure 9.7-23 Schematic diagram of asphalt roofing line.[65]

Table 9.7-38. CONTROL EQUIPMENT USED ON ASPHALT SATURATORS[68]

Number of saturators	% of Total	Control devices
28	37	Afterburners
18	24	High velocity air filters
10	13	Electrostatic precipitators
9	12	Wet scrubbers
11	14	Uncontrolled
76	100	

Table 9.7-39. EPA TEST DATA AT ASPHALT ROOFING PLANTS[66]

Emission source (2) control device measurement parameter	Plant A Saturator & coater electrostatic precipitator Inlet	Outlet 1	Outlet 2	Total outlet	Plant C Saturator & coater storage tanks high velocity air filter Inlet	Outlet	Plant D Saturator high velocity air filter Inlet	Outlet	Plant B Saturator & coater afterburner Inlet 1	Outlet 1	Inlet 2	Outlet 2	Total in	Total out	Storage tanks	Plant E Blowing stills afterburner Saturant asphalt Inlet	Outlet	Coating asphalt Inlet	Outlet
Particulate																			
g/Nm^3	0.1494	0.0117	0.0089	0.0103	0.9565	0.0160	0.1442	0.0297											
					0.8146	0.0137	---	---	0.4119	0.0549	0.6018[a]	0.0229	0.5080	0.0389	0.0776	27.87	0.364	33.41	0.210
g/m^3	0.1300	0.0101	0.0076	0.0089	29.94	0.50	6.93	1.53	0.3318	0.0275	0.4554	0.0114	0.3936	0.0183	--				
kg/h	6.7585	0.2585	0.1814	0.4399	1.5700	0.0270	0.1600	0.0350	5.4880	1.2250	7.0760	0.4990	12.565	1.724	1.00	10.47	0.185	13.52	0.117
kg/Mg shingle	0.2380	0.0190	0.0130	0.0160	---	---	1.2500	0.2800					0.3270	0.0450	--	80.01	6.58	98.61	3.27
kg/Mg felt	2.0270	0.1580	0.1110	0.1350	---	---	---	---					2.7700	0.3800	--	3.30	0.230	12.21	0.405
Control efficiency %		92.2	94.5	93.35		98.3		77.9		77.6		92.9		86.3			93.40		96.70
Volume flow rates																			
Nm^3/sec	12.33	6.12	5.72	11.84	8.71	9.29	13.27	13.89	3.72	6.38	3.19	6.13	6.91	12.52	0.38	0.9	4.21	0.91	4.29
m^3/sec	14.14	7.14	6.64	13.78	10.21	10.66	---	---	4.66	12.49	4.25	13.88	8.92	26.37	0.43	2.31	8.15	2.28	8.10
Control device temp °C		52				43		69		538		649			--		816		816
Shingle production rate Mg/hr		27.85				19.05		43.27		37.0					--				
Felt usage rate Mg/hr		3.27						5.53		4.3					--				

Low-voltage electrostatic precipitators have been installed on saturators, wet loopers, and coaters. Particulate collection efficiencies of approximately 93 percent have been demonstrated.[66] Maintenance costs are generally high on ESPs in this application since the exhaust air stream contains cohesive tar-like particles. Additionally, water sprays used in the ducts to lower the temperature form oil emulsions that are difficult to disperse; however, detergents have been used with some success. Low-voltage ESPs have received renewed interest by the industry as a result of fuel shortages, afterburner costs, and the water pollution aspects of wet scrubbers.

Low-energy scrubbers have demonstrated collection efficiencies in the 70 percent range when applied to saturators. This is not sufficient to eliminate plume opacity and odors. High energy venturi scrubbers have generally been avoided since operating costs are excessive and water clean-up systems are required.

High velocity air filters (HVAFs) have been used for particulate control on saturators, wet loopers, coaters, coater mixers, and storage tanks. Particulate collection efficiencies up to 98 percent have been demonstrated, with a pressure drop of 7 kPa.[66] HVAFs are capable of up to 99 percent removal efficiency if preceded by a precooling section of water sprays. This may require liquid effluent clean-up. HVAFs consist of a fiber pad in roll form which is advanced to expose a clean segment to the exhaust gases when needed. Because of the resulting oil content of these rolls, disposal may pose a solid waste problem.

The most popular control scheme currently for particulate matter control on blowing stills, saturators, wet loopers, and coaters is the use of afterburners (fume incinerators). Additionally, afterburners have been used to control emissions from storage tanks. Particulate control efficiencies of over 93% have been demonstrated using combustion temperatures of 816°C. Increased control efficiencies can be achieved by increasing combustion temperature, residence time, and turbulence.[66]

Afterburners are installed both with and without heat recovery, according to the needs of the individual plant. In general, heat recovery is more economical for new facilities. However, it is not always possible to achieve

maximum recovery since the afterburner exhaust often contains more heat than the process requires. Maximum heat recovery is realized only when the roofing manufacturing facility also produces the paper (dry felt), since the felt-drying process requires copious quantities of heat in the drying drums. The 95° to 760°C afterburner exhausts can be used for generating the steam for this process or can be diluted with ambient air and blown directly over the drying drum. Data have shown maximum heat utilization from this process in the range of 40 to 50 percent.[67] Recovered heat can also be used for preheating the fumes entering the afterburners, preheating the asphalt flux for blowing, and preheating asphalt in the saturators and/or in the blowing operation.

Afterburners now in use combust either natural gas or No. 2 fuel oil. The availability and cost of fuel is one disadvantage of this system. Afterburners are less expensive to install than other particulate collectors.

Neither HVAF nor ESP units have been used for the control of airblowing emissions. It is recognized that the higher particulate mass loadings in the air-blowing exhaust will increase the filter mat usage rate in a HVAF and will seriously compound the buildup and fouling problems in an ESP.[69]

The handling of the mineral stabilizer and the sand, talc, and mica parting agents causes emissions of dust particles during receiving operations, transfer, and application. These emissions are well controlled with fabric filters. The use of a fabric filter with pneumatic materials receiving and handling systems is usually an integral part of the plant process. Particulate control efficiencies in excess of 99 percent are common for fabric filter devices applied to these emissions.[67]

Fugitive emissions from saturators, wet loopers, coaters, and transfer points are usually captured with enclosures. Table 9.7-40 summarizes fugitive emissions test data from four plants.

9.7.11 Glass Manufacturing

9.7.11.1 Types of Glass. The glass manufacturing industry is classified by industry definitions in the Standard Industrial Classification (SIC) system. Under this system of classification, an industry is generally

Table 9.7-40. SUMMARY OF FUGITIVE EMISSIONS DATA FROM CAPTURE SYSTEMS[66]

Plant	Source	Number of observers	Total observation time (hours)	Emission location	Emissions: Type and color	Emissions: Frequency	Opacity range percent[a]	Visible[b]	5% Opacity	10% Opacity[b]	Comments
A	Asphalt saturator	2	12	Saturator and wet looper	None	N/A	0 0	0 0	0 0	0 0	Enclosure houses saturator and wet looper. Wet looper door open during tests. Coater hooded. Data recorded only during normal operation.
	Wet looper and coater	2	12	Coater	White fumes	Constant	10 5	100 100	100 100	100 0	
B	Asphalt saturator, wet looper and coater	2	12	Top 1 ft of door openings	Gray fumes	Intermittent[c]	0-22 0-22	34 31	17 5	5 3	Enclosure houses saturator, wet looper, and coater. Coater door open during tests. Data recording halted only when line stopped.
C-1	Asphalt saturator	2	6	Saturator	White puffs	Intermittent	0-2 0-2.3	7 38	0 0	0 0	Enclosure houses saturator and wet looper. Coater hooded. Testing interrupted when more than one door in enclosure was open.
	Wet looper and coater	2	6	Coater	White fumes	Variable but constant	0.2-5.8 1.5-6.3	100 100	10 20	0 0	
C-2	HVAF, inlet duct	2	12	HVAF/duct interface	White puffs	Intermittent	0 0-14[e]	0 20	0 0	0 0	Ducting not tightly sealed at HVAF inlet.
D-1	Asphalt saturator	2	10.8	Coater end of hood	Gray fumes	Almost constant	0-15 0-10	98 93	52 39	2 2	Saturator, wet looper, and coater are hooded (no enclosure). Data recorded only during normal operation
	Wet looper and coater	2	1.0	Top of hood (2 holes)	Gray fumes	Constant	20	100	100	100	
D-2	Asphalt unloading tanker transfer to storage tanks	2	6	Pipe connection	None	N/A	0	0	0	0	Tanker solid-coupled to piping through a flexible hose. Tanker hatch cover normally open 1-2 inches for venting.
				Hatch cover	Gray fumes	Intermittent[d]	0-10[f]	10	10	10	

[a]Range of opacities after data collated into 6-minute averages.
[b]Percent of total observation time opacities were visible, were 5 percent opacity or higher, or were 10 percent or higher.
[c]Emissions were visible only when doors were open. Unlike other tests, these were not halted when doors were open to correct process problems unless line was shut down.
[d]Emissions were visible only when hatch cover was open more than 1-2 in.
[e]Puffs lasted less than 15 seconds. Maximum opacity was 10 percent.
[f]Maximum opacity (30 percent) was experienced when hatch was opened fully for 2 min.

defined as a group of establishments producing a single product or a more or less closely related group of products. Accordingly, for the glass industry there are four SIC codes:

SIC 3211--Flat glass

SIC 3221--Container glass

SIC 3229--Pressed and blown glass, not elsewhere classified (N.E.C.)

SIC 3296--Wool fiberglass

The flat glass industry produces window glass, sheet glass, plate glass, and laminated glass. The glass container industry produces bottles, jars, and other glass packaging items. Wool fiberglass manufacturers make insulation and glass wool.

The pressed and blown glass segment of the glass industry makes a variety of products from a very large number of formulations. Among the large number of products made are art and table glassware; oven glassware; chemical glassware; glass blanks for electric light bulbs and TV tubes; insulators; construction glass; colored signal glass; pressed lenses for lighting, beacons, and lanterns; and tubing. Textile glass fibers are also made.

The major raw materials used in all types of glass manufacturing are glass, sand, soda ash, limestone, and cullet. (Cullet consists of recycled, crushed glass.) The raw materials melted to make glass can be categorized as formers, fluxes, and stabilizers. Formers account for the random three-dimensional atomic structure characteristic of glass. Fluxes are added to lower the melting points and the working temperatures which must be maintained in the furnace. Stabilizers improve the chemical durability of the glass product by lowering the coefficient of expansion and preventing glass crystallization. Borates increase the thermal durability of the glass product by lowering the coefficient of expansion; lead increases the refractive index and density; aluminum increases glass strength; feldspar, reportedly, lowers the mixture melting point and prevents devitrification; sodium accelerates the melting process; and arsenic compounds aid in fining (removing bubbles from the melt). In addition to these compounds, trace amounts of various metal oxides are added to the batch to change the color of the glass

by either imparting a color or neutralizing the tints caused by batch contaminants.

9.7.11.2 Industry Statistics. Glass manufacturing facilities are located throughout the United States and are usually situated in areas that ensure the availability of raw materials. These plants are found in 34 States, with almost three-quarters of them in the following 10 States: California, Illinois, Indiana, New Jersey, New York, Ohio, Oklahoma, Pennsylvania, Texas, and West Virginia. In early 1978, there were 129 primary glass-producing companies which together operated 338 individual plants. There were 32 flat glass plants; 117 container glass plants; 165 pressed and blown, N.E.C., plants, including 13 textile fiberglass plants; and 24 wool fiberglass plants.[70,71,72,73,74]

Recent production rates and dollar values of shipments for each segment of the industry are summarized in Table 9.7-41.[75,76,77,78,79,80,81] A significant result of these statistics is that over 90 percent of the total glass produced in 1976 is soda-lime glass, assuming 77 percent of the pressed and blown glass produced is soda-lime glass, as it was in 1973.[82]

9.7.11.3 Process Description. Glass is manufactured by a high temperature conversion of raw materials into a homogeneous melt capable of fabrication into useful articles. This process can be broken down into three subprocesses: raw materials handling and mixing, melting, forming and finishing. Figure 9.7-24 gives a typical flow diagram for the manufacture of soda-lime glass;[83] however, the flow diagram has general application to other commercial glass formulations.

The raw materials are mixed according to the desired glass recipe. For instance, borax will be added to make a low-expansion borosilicate glass if oven glassware is to be molded.

Pot type melting furnaces are used if only a few tons of a specialty glass are to be produced; the continuous tank type furnace is used for larger production quantities. By far the larger amount of glass is melted in furnaces, and only these furnaces are considered here in connection with particulate control. The glass melting process is the largest source of fine particulates in a glass manufacturing plant.

Continuous tank furnaces have a holding capacity of up to 1400 tons and a daily output of as much as 300 tons. Figure 9.7-25 is a cut-away view of

Table 9.7-41. 1976 PRODUCTION RATES AND VALUES OF SHIPMENTS[75-81]

Segment	Production rate in 1976	Dollar value of shipments in 1976, in millions of dollars
Flat glass	2.56 Tg (2.91 MM Tons)[75]	645[76]
Container glass	11.8 Tg (13.0 MM Tons)[77]	3,251[78]
Pressed and blown (N.E.C.)	1.73 Tg (1.95 MM Tons)[75]	1,598[79]
Wool fiberglass	0.896 Tg (0.986 MM Tons)[80]	817[81]

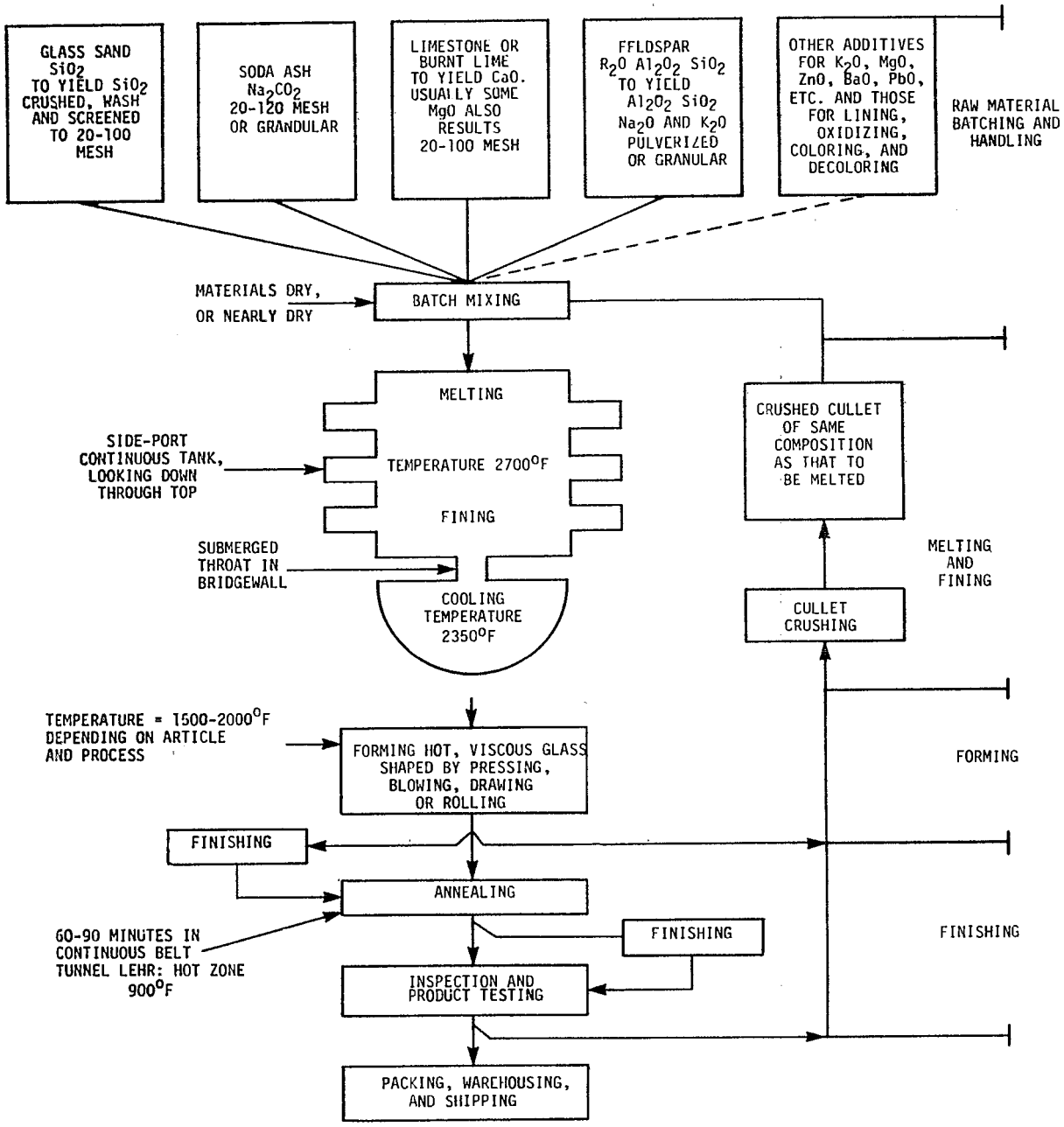

Figure 9.7-24 Typical flow diagram for the manufacture of soda-lime glass.[83]

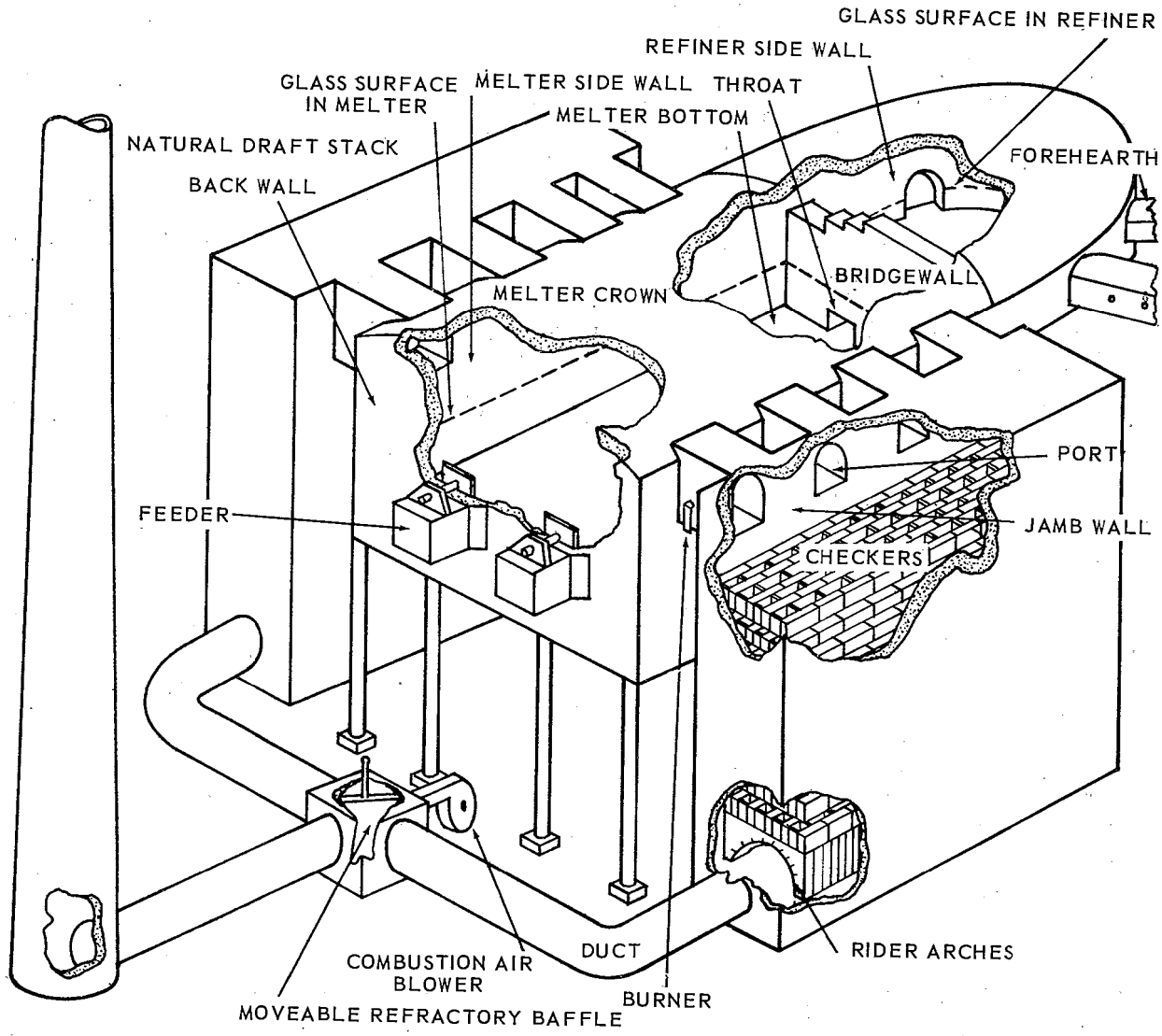

Figure 9.7-25 Regenerative side port glass-melting furnace.[84]

a typical side-port, regenerative container glass furnace.[84] It is also representative of some specialty glass furnaces. The "batch" feed is introduced at the left, or "melting end," which is maintained at as high a temperature as the production requires. The glass is heated by direct radiation from the flames and the refractory melter crown. As the mass fuses, it passes into the "fining zone" and finally through the submerged throat of the bridgewall into the "working zone."

The combustion gases, on leaving the melting zone, retain a considerable amount of heat. This is reclaimed in a regenerator or brick checker chamber. When the firing cycle is reversed, combustion air is preheated by being passed through the brickwork. Preheating saves fuel but increases the flame temperature.

A variation on side-port firing is the end-port fired furnace, in which a single burner replaces multiple burners at one end of the tank. The combustion gases follow a U-shaped path and enter a checker chamber for heat reclamation. Reversal of the cycle is then similar to that in sideport firing. Numerous variations on construction and firing include direct firing, and regenerative firing.

Coal is not used in glass melting. Since molten glass is conductive, electric heating is used as a booster to supplement fuel firing whenever technically and economically practical. Gas and, to a lesser extent, fuel oil are the preferred fuels.

9.7.11.4 Emission Characteristics. The evolution of particulates and other pollutants from a glass melting furnace depends, among other things, on combustion gas volume and melt temperature. Much of the fine particulate is condensed sodium sulfate formed by vaporization of compounds of sulfur and compounds of sodium.[85] Testing shows that over 75 percent of the particulate catch has a size less than one micrometer.[86]

The chemical composition of the particulate emitted from the manufacturing of glass depends on the raw materials processed through the furnace. The particulate emitted in borosilicate glass manufacture consists of boric acid and alkali borates. In the production of opal glass, B_2O_3, NaF, and Na_2SiF_6 appear in the particulate catch. For lead glass production in a natural gas-fired furnace, the chemical composition of the particulate is lead oxide and lead sulfate.[87]

Other operating parameters affect the levels of pollutants emitted from the glass furnace, such as: the amount of cullet in the raw batch, the use of electric boosting, the surface area of the molten glass bed, the production (or pull) rate of glass exiting the furnace, and the type of fuel being burned.

The surface area of molten glass exposed to combustion gases has been shown to affect particulate emissions. With all other parameters constant, a larger exposed area generates more particulate than a smaller area.[88]

For a furnace producing a single type of glass, increasing the pull rate requires more energy, which, if supplied by the combustion of fossil fuels, causes an increase in furnace temperature with a concomitant increase in emissions. This dependence of emission rates on furnace throughput is incorporated within the compliance regulations of several States. These compliance regulations indicate that particulate emissions per kilogram of glass produced decrease as production rate increases. In the limiting case of zero pull rate, data show that particulates are still emitted from the molten glass bed.[89] For this case, the emission levels at zero pull rate were roughly 20 percent of those at the normal pull rate with both measurements being taken at the same temperature.

Gaseous and particulate emissions from uncontrolled glass melting furnaces are depicted in Table 9.7-42 for each industry category. Values of gaseous emissions are taken from source assessment documents.[90,91,92,93,94] Particulate emissions are based on the results of: emission tests performed for the EPA, on the results of emission tests provided by the glass industry in response to questionnaires, and on the emissions reported in source assessments of the screening of study documents.

The largest mass emissions from glass melting furnaces are nitrogen oxides. Changing from natural gas firing to fuel oil will increase sulfur oxide emissions in proportion to the sulfur content of the fuel oil. There is roughly a 10 percent increase in particulate emissions from fuel oil fired furnaces compared with natural gas firing.[95,96] Particle size distribution was not dependent on type of fuel fired.

The total amount of particulate matter emitted by the entire nationwide glass manufacturing industry was 23.4 Gg in 1977.[97] A significant fraction

Table 9.7-42. EMISSIONS FROM UNCONTROLLED GLASS MELTING FURNACES FOR EACH INDUSTRY CATEGORY[90,91,92,93,94]

Industry category	Particulate, g/kg	(lb/ton)	Fluorides, g/kg	(lb/ton)
Flat glass	1.5	(2.0)		
Container glass	1.25	(1.5)		
Pressed and blown: soda-lime	1.25	(2.5)		
Pressed and blown: other than soda-lime	5.0	(10.0)	10	(20)
Wool fiber-glass	5.0	(10.0)	0.06	(0.12)

is in the respirable range. The median particle diameter from glass melting and processing operations is generally submicrometer, with 79 to 83 percent of the particles less than 3.0 micrometers in size.[98] The size distribution of particulate matter emitted is shown for two specific glasses in Figure 9.7-26. These values change with the chemical composition of the glass (flint glass versus amber glass).

9.7.11.5 Applicable Control Techniques.

9.7.11.5.1 Current regulations. Table 9.7-43 contains Federal standards of performance, as they apply to particulates from gas-fired glass melting furnaces for each of the glass manufacturing categories. These standards are based on analyses of costs and other factors that show the ability of each category of glass manufacturing furnace to achieve such a level of control through the use of systems of continuous emission reduction.

An increment 30-percent greater than the promulgated emisssion limits for natural gas-fired furnaces is allowed for fuel-oil fired glass melting furnaces, and a proportionate increment is allowed for glass melting furnaces simultaneously firing natural gas and fuel oil. Both allowances apply to glass furnaces melting other than flat glass. The flat glass standard is based solely on emission tests conducted on a liquid-fired furnace while the other standards are based on emission tests conducted on both liquid and gas-fired furnaces.

State particulate regulations for the glass industry are largely based on process weight.[99] California limits are those for allowable particulate emissions in the South Coast Air Quality Management District. New Jersey allows for an increase in the use of cullet and has a special concentration limit for lead glass.

9.7.11.5.2 Control of particulates from glass melting. Examination of the three major operations of glass manufacturing--namely, raw material handling, glass melting, and forming and finishing--shows that essentially 100 percent of the oxides of nitrogen, 98 percent of the particulates, and essentially all of the oxides of sulfur are generated in the melting of glass.[99] Because emissions are centered in the glass melting operations, the emission control techniques described in this section deal with the reduction of airborne emissions in the furnace exhaust.

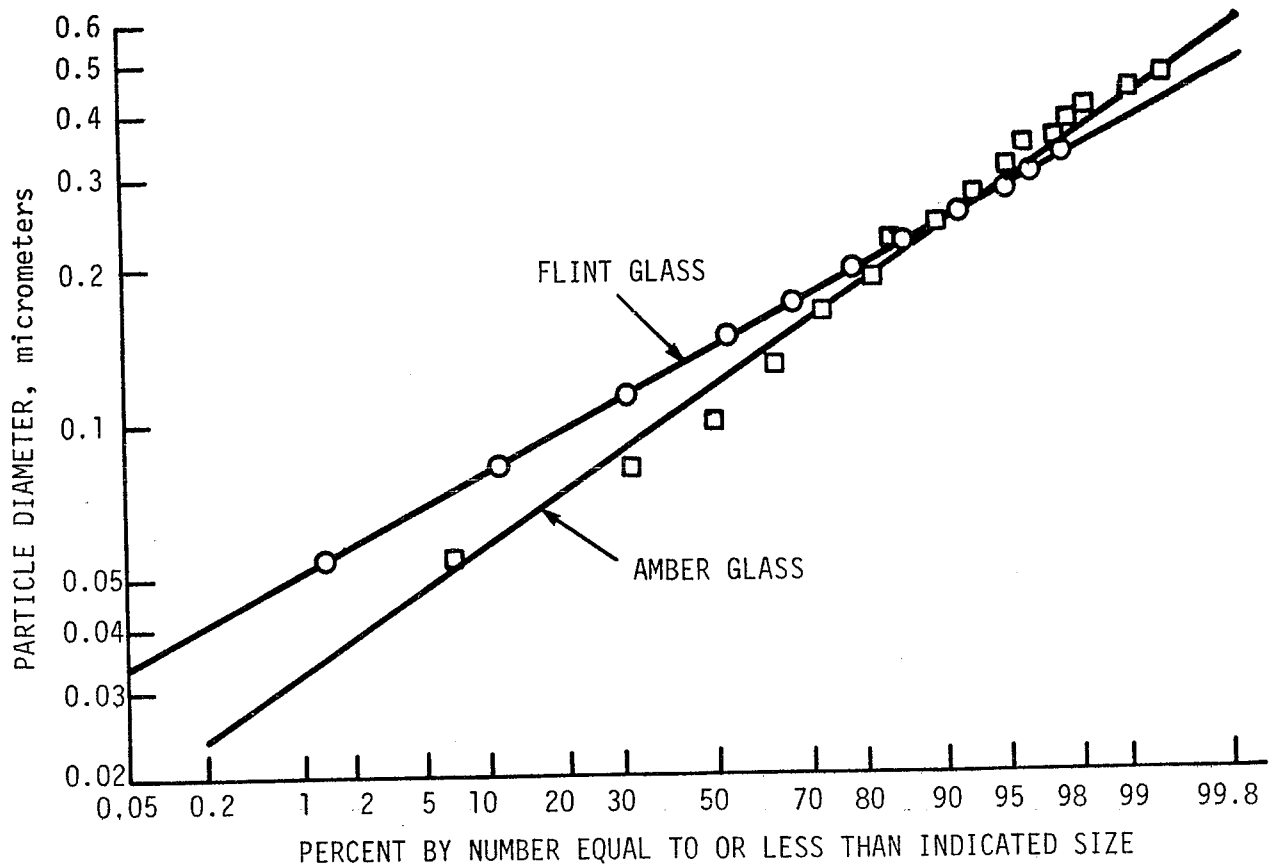

Figure 9.7-26 Log-probability distribution of particle sizes present in glass furnace effluent.[69]

Table 9.7-43. STANDARDS OF PERFORMANCE FOR GAS-FIRED GLASS MELTING FURNACES

Glass category	Standard (g of particulate/kg of glass produced)
Container glass	0.1
Pressed and blown glass:	
Borosilicate	0.5
Soda-lime or lead	0.1
Other than borosilicate, soda-lime, or lead	0.25
Wool fiberglass	0.25
Flat glass	0.225

Process Modifications--Process modifications employed in the manufacturing of glass in order to lower emissions include reducing the amounts of materials in the feed that vaporize at furnace temperatures, increasing the fraction of recycled glass in the furnace feed, installing sensing and controlling equipment on the furnace, modifying the burner design and firing pattern, and utilizing electric boosting.

Because emission tests are not available to document the lowering of particulate emissions by using process modifications, the evidence substantiating the efficacy of these methods is not quantitative as is that for the other control techniques discussed below. Nevertheless, these control methods and the approach to particulate emission control warrant consideration, whenever it is feasible to employ them.

All Electric Melting--In contrast to conventional fuel-fired furnaces, the surface of the melter in a cold top electric furnace is maintained at ambient temperature, and fresh raw batch materials are fed continuously over the entire surface. As molten glass is withdrawn from the melter, raw batch drops in the melter, gradually heating and finally reacting in the liquid phase. This processing minimizes losses from vaporization. The gases discharged through the batch crust consist of carbon dioxide and water vapor. Since there is no combustion taking place, fuel-derived pollutants are eliminated. The only air emissions are from the decomposition of carbonates, sulfates, and nitrates, with the majority of the exhausts being CO_2. Finer control of the glass melting process has meant lower emissions, since electric melters retain more borates, phosphates, and fluorides than fossil fuel-burning furnaces.[100] In addition, there is no solid disposal problem as with fabric filters or with electrostatic precipitators, and no water disposal problem as with scrubber systems.

Actual emission test results are presented in Table 9.7-44. All tests were performed by EPA Method 5 except the soda-lime melts. These results demonstrate that particulate emission levels equivalent to or less than approximately 0.1 g/kg (0.2 lb/ton) can be maintained in the production of soda-lime and borosilicate glasses.

Table 9.7-44. ALL ELECTRIC GLASS MELTING FURNACE PARTICULATE EMISSIONS TESTS[99]

Emission test reference number	Glass industry category	Glass type	Mass emissions g/kg	(lb/ton)
92	Wool fiberglass	Soda-lime borosilicate	0.05	(0.10)
92	Wool fiberglass	Soda-lime borosilicate	0.07	(0.14)
92	Wool fiberglass	Soda-lime borosilicate	0.09	(0.18)
93	Glass container	Soda-lime	0.12	(0.24)

Fabric Filters--Several glass manufacturing facilities utilize fabric filter systems to collect particulates in the glass melting furnace exhaust. In these systems, the furnace exhaust is first cooled and then passed through a fabric filter which retains particulate and allows the gases to vent to the atmosphere. The physical characteristics of the filtering fabrics and the agglomerating tendency of submicrometer particles have made the fabric filter systems viable control techniques for the collection of glass melting furnace particulates.

Fabric filter systems are claimed to have the advantages of high collection efficiency (99 percent),[101] low pressure drop across the system, and low energy requirements.[102] Collection efficiencies are not affected by the electrical resistivity of the particles. In addition, bag life is about two years depending on the bag construction material.[103] There are certain disadvantages to the application of fabric filters to glass melting furnace gases; for example, the temperature of gases entering the fabric filter must be below a maximum value to inhibit attack on the filtering media as well as above a minimum value to prevent condensation of sulfur trioxides and too high a moisture content of the gases can form an irremovable plug within a filter bag.

Table 9.7-45 lists emission test results for glass melting furnaces using baghouse controls. EPA Method 5 was used except in the first test listed, which used the Los Angeles particulate sampling method.

Particulate emissions for the tests listed in Table 9.7-45 range from 0.12 g/kg (0.24 lb/ton) to 0.55 g/kg (1.1 lb/ton). The high collection efficiency claimed for fabric filters is substantiated in the soda-lead borosilicate glass test. The particulate collection efficiency of the fabric filter treating the soda-lime furnace exhaust may be lower than the efficiency which is technically feasible because particulate collection was never maximized in this system. The unit was designed only to meet local opacity regulations. Since the unit met the regulations after startup, no improvement of particulate collection was attempted.

In conclusion, fabric filters have demonstrated reductions of particulate emissions to levels equivalent to less than 0.2 g/kg (0.4 lb/ton) for glass formulations in two glass industry categories--"wool fiberglass" and

Table 9.7-45. PARTICULATE EMISSION TEST RESULTS FOR GLASS MELTING FURNACES EQUIPPED WITH FABRIC FILTERS[99]

Glass industry category	Glass type	Air/ cloth ratio	Particulate removal efficiency, percent	Fabric filter outlet particulate emissions, g/kg	(lb/ton)
Pressed and blown: soda-lime	Soda-lime	0.65 : 1	72	0.12	(0.24)
Pressed and blown: other than soda-lime	Soda-lead borosilicate	0.6 : 1	94.8	0.17	(0.34)
Wool fiberglass	Borosilicate	0.85 : 1		0.20	(0.40)
Wool fiberglass	Soda-lime borosilicate	0.5 : 1		0.55	(0.10)
Wool fiberglass	Soda-lime borosilicate			0.26	(0.52)

"pressed and blown, other than soda-lime." Additionally, based on the assessment of test 36, appropriately sized and optimized fabric filter systems can be expectd to reduce particulate emissions from soda-lime melting furnaces to levels of 0.1 g/kg (0.2 lb/ton).[99]

Venturi Scurbber Systems--Although scrubber systems have been built to control particulate emissions in the glass industry, only a few devices are in use presently to control container glass emissions. The most common system in operation is the venturi scrubber. In a venturi scrubber, particle-laden gases are accelerated by a high power I.D. fan through a restriction in the ducting where water is injected into the gas stream. The velocity of the gas stream provides the dual function of atomizing the scrubbing fluid while at the same time providing a differential velocity between particles and the resulting liquid droplets. Since the particulates are mostly water soluble, the scrubber provides a means of removing these emissions. Additionally, some gases are absorbed as condensables. The pressure drop to obtain high velocities in the throat of a scrubber is directly proportional to the gas velocity squared and the liquid-to-gas ratio; therefore, high velocities are possible only at substantial pressure drops which result in high fan energy expenditures. Typical pressure drops are approximately 7.5 kPa (30 inches of water).[104]

Table 9.7-46 lists emission test results for furnaces using venturi scrubbing systems. The EPA Method 5 test was used except for test 43, which used the Los Angeles particulate test method.[99] Pressure drops were 30 to 34-in. water, and sulfur dioxide removal varied from 76-90 percent. Tests 43 and 45 are from the same furnace. These tests demonstrate that venturi scrubbers can lower the particulate emissions from uncontrolled container glass melting furnaces to a level equivalent to or less than 0.20 g/kg (0.4 lb/ton).

Electrostatic Precipitators--As of 1979, electrostatic precipitators were installed on more than 19 glass furnace exhaust systems throughout the country, making ESPs the most popular control technique.[99]

The fundamental steps of electrostatic precipitation are particle charging, collection, and removal and disposal of the collected material. Particulate charging is accomplished by generating charge carriers which are

Table 9.7-46. PARTICULATE EMISSION TEST RESULTS FOR GLASS MELTING FURNACES EQUIPPED WITH VENTURI-SCRUBBERS[99]

Emission test reference number	Glass industry category	Glass type	Particulate removal efficiency, percent	Venturi-scrubber outlet Mass emissions, g/kg	(lb/ton)
98[a]	Container	Soda-lime	82.5	0.37	(0.74)
99	Container	Soda-lime		0.12	(0.24)
100[a]	Container	Soda-lime	79.6	0.14	(0.28)
101	Container	Soda-lime		0.20	(0.40)

[a]Oil fired.

driven to the particulates by an electric field. Collection occurs as the charged particulates migrate and adhere to electrodes. Applying a mechanical force to the collection electrodes dislodges the collected material, which then falls into hoppers. Effective transfer of dust to the hopper depends on the formation of chunks or agglomerations of dust, which fall with a minimum of reentrainment.

Electrostatic precipitators can be designed and guaranteed to collect 99 percent of the particulate in the glass melting furnace exhaust.[105]

Table 9.7-47 lists emission test results for electrostatic precipitator-controlled glass melting furnace exhaust. In some plant configurations, one or more electrostatic precipitators collect particulates from several furnaces. In these cases, the table entries list the total pull rates from all furnaces whose exhausts are controlled during testing and the sum of the particulate emissions of all electrostatic precipitators in the plant.

EPA Method 5 testing was used for all tests with the following exceptions: the Los Angeles test method was used for tests 47 and 48; tests 62 through 64 were by plants using unspecified test methods. Test 53 was on a furnace firing number 5 fuel oil.

The particulate emissions for soda-lime formulations in the "container" glass category and for the lead, fluoride-opal, and potash-soda-lead formulations in the "pressed and blown, other than soda-lime" category (see Table 9.7-47) range from 0.3 g/kg to 0.27 g/kg (0.6 lb/ton to 0.54 lb/ton). For borosilicate glass formulations manufactured in the "pressed and blown, other than soda-lime" category and in the "wool fiberglass" category, the particulate emission test results range from 0.09 g/kg to 0.57 g/kg (0.17 to 1.14 lb/ton). Two factors that could explain the higher values for borosilicate emissions despite the larger special collection area are: (1) the higher electrical resistivity of borosilicate dusts, and (2) the tendency for the collected dusts to bridge in the precipitator.[106] Since the resistivity of the lead dusts is nearly equal to the resistivity of borosilicate dusts and since the lead particulate is collectable, the second factor may control the collection of borosilicate glass melting furnace emissions.

In conclusion, electrostatic precipitators have demonstrated particulate emission control levels of 0.06 g/kg (0.12 lb/ton) for soda-lime,

Table 9.7-47. PARTICULATE EMISSION TEST RESULTS FOR GLASS MELTING FURNACES EQUIPPED WITH ELECTROSTATIC PRECIPITATORS[99]

Emission test reference number	Glass industry category	Glass type	Specific collection area		Percent of design SCFM during test	Particulate removal efficiency, %	Precipitator outlet mass emissions,	
			$m^2/Nm^3/s$	$(Ft^2/SCFM)$			g/kg	(lb/ton)
47	Container	Soda-lime	a	a		91	0.06	(0.12)
48	Container	Soda-lime	138	(0.65)	83		0.07	(0.14)
49	Container	Soda-lime	237	(1.12)	116		0.06	(0.12)
50	Pressed and blown: other than soda-lime	Borosilicate	225	(1.06)	100		0.45	
51	Pressed and blown: other than soda-lime	Borosilicate	138	(0.65)	89		0.57	(1.14)
52	Pressed and blown: other than soda-lime	Borosilicate	290	(1.37)	43		0.48	(0.96)
53	Pressed and blown: other than soda-lime	Borosilicate	179	(0.85)			0.48	(0.96)
54	Pressed and blown: other than soda-lime	Fluoride/opal	379	(1.19)	64		0.17	(0.34)
55	Pressed and blown: other than soda-lime	Lead	233	(1.09)	75	93	0.06	(0.12)
56	Pressed and blown: other than soda-lime	Lead	337	(1.59)	117		0.08	(0.16)
57	Pressed and blown: other than soda-lime	Lead					0.08	(0.16)
58	Pressed and blown: other than soda-lime	Lead	183	(0.56)	91		0.07	(0.14)
59	Pressed and blown: other than soda-lime	Lead	195	(0.92)	80		0.18	(0.36)
60	Pressed and blown: other than soda-lime	Lead				97	0.27	(0.54)
61	Pressed and blown: other than soda-lime	Potash-soda-lead	237	(1.12)	122		0.03	(0.06)
62	Wool fiberglass	Borosilicate	220	(1.04)			0.36	(0.72)
63	Wool fiberglass	Borosilicate	222	(1.05)			0.09	(0.19)
64	Wool fiberglass	Borosilicate	216	(1.02)			0.09	(0.17)

[a]Claimed proprietary.

lead, and potash-soda-lead glass formulations, and control levels of about 0.2 g/kg (0.4 lb/ton) for borosilicate glass formulations.

Summary of Particulate Control Techniques--Table 9.7-48 presents the levels of particulate emissions from the control systems discussed in this section for each industrial glass category except flat glass manufacturing. The emission levels listed in Table 9.7-48 represent particulate control technically achievable as substantiated by test reports, and, therefore, these levels reflect the lowest values from the previous tables.

All-electric melting of glass has been shown to greatly reduce the particulate emissions from glass melting furnaces without the addition of add-on control equipment. This technique is not applicable to the entire glass industry because, at present, only formulations of appropriate resistivity and furnaces of relatively moderate production rates can utilize all-electric melting.

Fabric filters have been installed on existing furnaces classified in both the "pressed and blown" and "wool fiberglass" categories.

Venturi scrubbers have been installed on existing container glass furnaces. Scrubbers have not been used to control borosilicate emissions because the chemicals discharged in the liquid effluent present more of a disposal problem than those from soda-lime glasses.[107]

Electrostatic precipitators have been installed widely in the glass manufacturing industry. Significant amounts of emission tests substantiate the values listed in Table 9.7-48.

Switching fuels from natural gas to fuel oil adds particulate formed in combustion to the particulate formed in producing glass. The add-on control devices discussed above would be expected to be equally efficient in controlling particulate emissions with either fuel. As demonstrated in Tables 9.7-43 and 9.7-44, venturi scrubbers and electrostatic precipitators have previously been used on oil-fired glass melting furnaces.

Although, as of June 1978, no add-on control system continuously controls particulate emissions from a flat glass manufacturing furnace, there is no technical evidence to preclude their use. The flat glass furnaces produce more soda-lime glass than container furnaces, but the physical and

Table 9.7-48. REPRESENTATIVE PARTICULATE EMISSIONS FROM GLASS MELTING FURNACES[99]

Glass industry category	Glass type	All-electric Melting		Fabric filter		Venturi scrubber		Electrostatic precipitator	
		g/kg	(lb/ton)	g/kg	(lb/ton)	g/kg	(lb/ton)	g/kg	(lb/ton)
Container	Soda-lime	0.12	(0.24)			0.20	(0.40)	0.06	(0.12)
Pressed and blown: soda-lime	Soda-lime			0.12	(0.24)				
Pressed and blown: other than soda-lime	Lead							0.08	(0.16)
Pressed and blown: other than soda-lime	Fluoride/ opal							0.17	(0.34)
Pressed and blown: other than soda-lime	Borosilicate			0.17	(0.34)			0.50	(1.0)
Wool fiberglass	Borosilicate	0.07	(0.14)	0.25	(0.50)			0.10	(0.20)

chemical nature of the resulting particulates is identical. Because of the greater glass production in flat glass furnaces and concomitant larger exhaust volume than in container glass furnaces, an electrostatic precipitator would probably best control the particulate emissions. One flat glass manufacturer is presently installing an electrostatic precipitator.

9.7.12 Fiberglass Manufacturing

Fiberglass is manufactured by melting various raw materials to form molten glass, drawing the molten glass into fibers, and coating these fibers with various organic materials. There are many different glass compositions used to make commercial fiberglass. These compositions are selected to produce finished products with material properties that are suitable for given applications. Types of glass, along with their composition, properties, and uses, are shown in Table 9.7-49.[108]

Textile fibers and wool fibers are the two basic types of fiberglass products; they are made by different forming processes. Textile fibers, often referred to as yarns, are formed in continuous fibers on spools. Wool fibers are collected as mats and formed in various lengths.

In 1972, there were a total of 33 fiberglass manufacturing plants in the U.S., operated by 10 manufacturers. These plants are located primarily in the north-central, mid-Atlantic, and southeast regions of the U.S., with three plants in each of Texas and California.

In 1970, 210 Mg of textile fibers and 550 Mg of wool fibers were produced in the United States. The annual growth rate during the 10 years before 1970 was 12.2 percent for textile fibers and 4.2 percent for wool fibers.[109]

The major emission from the fiberglass manufacturing process is particulate matter from the glass-melting furnace, the forming line, the curing oven, and the product cooling line.[110] For textile fiber manufacturing, the melting furnace produces 89 percent of total uncontrolled particulate emissions from this process (an average of 85 percent for regenerative furnaces and 91 percent for recuperative furnaces). The major source of emissions from wool/fiber production is the forming process, which accounts for 66 percent of the total emissions; glass melting accounts for 29 percent of

TABLE 9.7-49. GLASS TYPE, COMPOSITION, PROPERTIES AND USAGES[108]

Glass name	Glass type	Properties	Uses
E-Glass	Low alkali, Lime-alumina borosilicate	o Good durability o Moderate cost	o Textiles o Electical insulation o Plastic reinforcement o Mats
T-Glass	Soda-lime glass	o Low cost o Thermal and acoustic properties	o Coarse fiber mats for air filters o Thermal insulation o Acoustic insulation
C-Glass	Soda-lime borosilicate	o Resistive to acids	o Mats for storage battery retainers o Acid chemical filters o Filter cloths o Anode bags
SF-Glass	o 59.5% SiO_2 o 14.5% Na_2O o 8% TiO_2 o 7% B_2O_3 o 11% other	o Excellent weathering properties	o Low density thermal and acoustic insulators o Paper additives o High efficiency all glass filter papers
S-Glass	o 65% SiO_2 o 25% Al_2O_3 o 19% MgO	o High strength o High Young's modulus	o Aerospace applications

the total. Electric induction furnaces can be used in both textile and wool production; such furnaces reduce particulate emissions to negligible quantities.[110]

9.7.12.1 Process Description. Fiberglass production plants can be divided into five process stages, with each stage having different emission characteristics. These stages are outlined in Figures 9.7-27 and 9.7-28 for textile and wool fibers, respectively. The general process consists of:

- Batch mixing and conveying
- Glass melting
- Forming operations
- Curing
- Cooling and fabrication

Batch mixing and conveying systems are usually commercial equipment of standard design. This equipment is customarily contained in an enclosed structure called the "batch plant," which is separate from the melting furnace.

The average particle size of the raw materials used in the production of glass fiber is about 300 micrometers. A small percentage of these materials are less than 50 micrometers in size and can cause emission problems during conveying, mixing, and storage operations.[108]

The glass-melting reaction takes place in a large rectangular gas- or oil-fired reverberatory furnace. These melting furnaces are equipped with either regenerative or recuperative heat-recovery systems. Electric induction has also been used for wool fiber production because it is competitive with regenerative furnaces in areas with low electric power costs. Particulate emissions from melting furnaces result from the complete physical and chemical reactions inside the furnace. Factors affecting particle size and emission rates include the furnace design (fuel oil, natural gas, or electric), raw material size and composition, and type and volume of the furnace heat-recovery system.[110] The generation of particulate matter is also affected by the bubbling of carbon dioxide which propels particles from the melting batch.[8] Reverberatory furnaces generally produce more particulate emissions than melting furnaces; emissions from electric induction furnaces are negligible.[108]

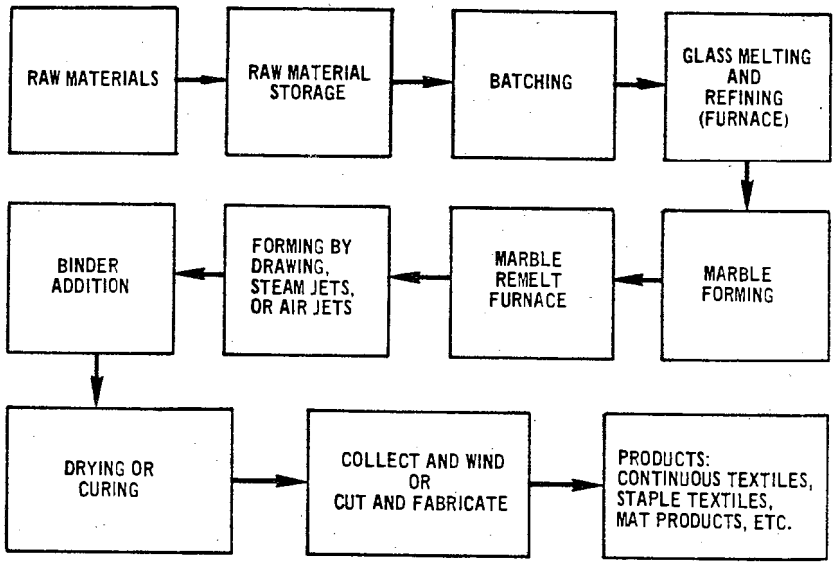

Figure 9.7-27 Typical flow diagram of textile-type glass fiber production process.[40]

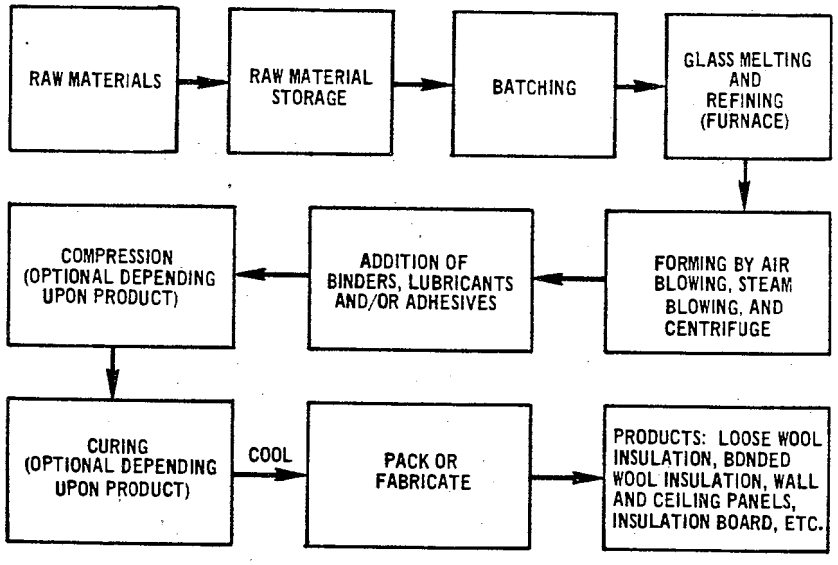

Figure 9.7-28 Typical flow diagram of wool-type glass fiber production process.[40]

Forming operations differ for textile and wool fiber production. Wool fiber mats are produced in large volumes by feeding molten glass directly from a glass tank through platinum bushings, attenuating the glass streams into fibers, collecting the fibers as mats, and spraying these mats with lubricants and binders. Flame blowing is used to produce fibers less than 250 micrometers in diameter.

For textile fibers, molten glass from the forehearth passes through platinum bushings and is attenuated by an air blower. Staple fibers are collected in a revolving perforated drum and wound as a "sliver" onto a spool rotating at higher speeds than the collecting drum. For very fine fibers (less than 6.5 micrometers in diameter), glass makers form the molten-refined products into marbles, which are inspected for quality and then remelted in an electric furnace.

Emissions from the forming line are caused by evaporation and subsequent condensation of the resin binder that is sprayed on the hot glass fibers as they emerge from the forming nozzles. This fine condensed particulate material which escapes from the operation is largely submicrometer in size. The particulate emissions from the forming line are primarily affected by the composition and quantity of the binder and by the spraying techniques used to coat the fibers; a fine spray and volatile binders increase emissions.[109]

Curing and cooling operations also differ for wool and textile fiber production. Wool fiber blankets enter a curing oven where the thermosetting binder is cured at temperatures ranging from 200°C to 260°C. Certain products must be restricted to an established thickness and density, and this is accomplished in the curing oven by pressure rolls and plates. For textile fibers, tubes from the winding operation are sent to either a curing oven where the thermosetting binder is cured, or to a yarn conditioning room where the binder sets from 1 to 16 hours under conditions of high humidity. The curing vaporizes additional amounts of resin binder, which condenses upon cooling and causes a visible emission. The amount of emissions depends largely on oven temperature and binder composition.

After curing and cooling, wool fiberglass is slit and cut to specified dimensions or rolled into packages. Textile fiber slivers are twisted into

coarse or fine yarns and then chopped and packaged for shipment. Particulate emissions from this process are negligible.

9.7.12.2 Control Techniques. Particulate control devices for batch mixing and conveying of raw materials and for glass melting in the fiberglass manufacturing industry are essentially the same as those used in the glass manufacturing industry. The reduction of particulate emissions during these two production stages can be accomplished by several methods, including control and treatment of raw material, efficient combustion of fuel, proper design of glass furnaces, and installation of control equipment. Control techniques and options for these two particulate emission sources are outlined in Section 9.7.11.

The control of the fine condensed fumes from the forming lines can be accomplished by process modifications or control devices. Process modifications include a change in resin composition, a change in the method of application, and a reduction of forming zone temperatures.

Many exhausts from forming operations produce submicrometer organic, sticky particles that present serious problems with fabric filtration. High energy scrubbers may require secondary water treatment systems. Electrostatic precipitators experience fouling from the sticky particulate matter. Incineration becomes costly for large volume gas flows.

The gaseous and particulate emissions from the curing process can be controlled with gas-fired afterburners.

9.7.13 Mineral Wool

Mineral wool, a fibrous material made from natural rock and metallurgical slag, is used for thermal and acoustical insulation and as a gas filtration medium. A typical mineral wool plant produces 2 Mg/hr or 17.5 Gg/yr of product.[111] The wool manufacturing process has three primary sources of particulate emissions: the cupola furnace stack, the blow chamber, and the curing ovens. Some particulate matter is also emitted during the cooling stage; however, these emissions are not well characterized. Particulates emitted during mineral wool production include mineral wool particles, fumes, oil vapors, and binding agents.

9.7.13.1 Process Description. Mineral wool is usually made in a cupola furnace that is charged with slag from steel blast furnaces and basalt, limestone, or silica rock. Slag from copper or lead furnaces may also be used.

The mixture of rock and slag is heated to a molten state (1650°C) using coke as fuel. A mechanical spinner is used in most current operations.[108] The molten minerals are fiberized on a spinning rotor using a high velocity stream of air to assist in fiber attenuation. An oil or binding agent is applied to the fiber before it is collected on a wire mesh conveyor in an area known as the blow chamber. Phenolic resins may be applied to some wool products as binding agents. These binding agents are cured in ovens after application, and the mineral wool is then cooled prior to shipment or storage (see Figure 9.7-29).

9.7.13.2 Particulate Control Techniques. Emissions from the cupola or furnace stack consist of submicrometer sized fume particles. These emissions can be controlled with dacron or orlon fabric filters having a maximum filtering velocity of 0.8 m/min.[6] Most of these particles can be inhaled--about 97 percent (by number) are less than 15 micrometers in diameter and 92 percent are of submicrometer size.[59] Glass fiber fabrics are not recommended because of the fluorides present in the cupola exhaust gases.

Fumes, oil vapors, binding agent, and wool fibers are emitted from the blow chamber. When the blow chamber temperature is maintained below about 80°C, wool fiber emissions are the major component of any emissions. At these lower temperatures, oily mists are not formed. The most common control devices on blow chambers are low energy scrubbers, primarily baffled spray chambers.[111] One reference reports the use of a wet scrubber/ESP combination on blow chamber exhausts.[32] Wire mesh lint cages are sometimes used to collect larger wool fibers. Fabric filters are not advisable because the binding agents may clog the filters.

Blowing operations may generate large amounts of fibrous particles or "flywool." At the point of fiber formation, an oil is applied to suppress dust and cause the fibers to agglomerate. The contact of oil with hot surfaces during spinning may generate decomposition products and/or aerosols of oil.

Emissions from curing ovens, usually binding agent and oil particles, may create an opacity problem. The particles are not emitted in large quantities and since they are combustible, the most common form of control is direct flame incineration.[111] The use of electrostatic precipitators and catalytic incinerators has also been reported.

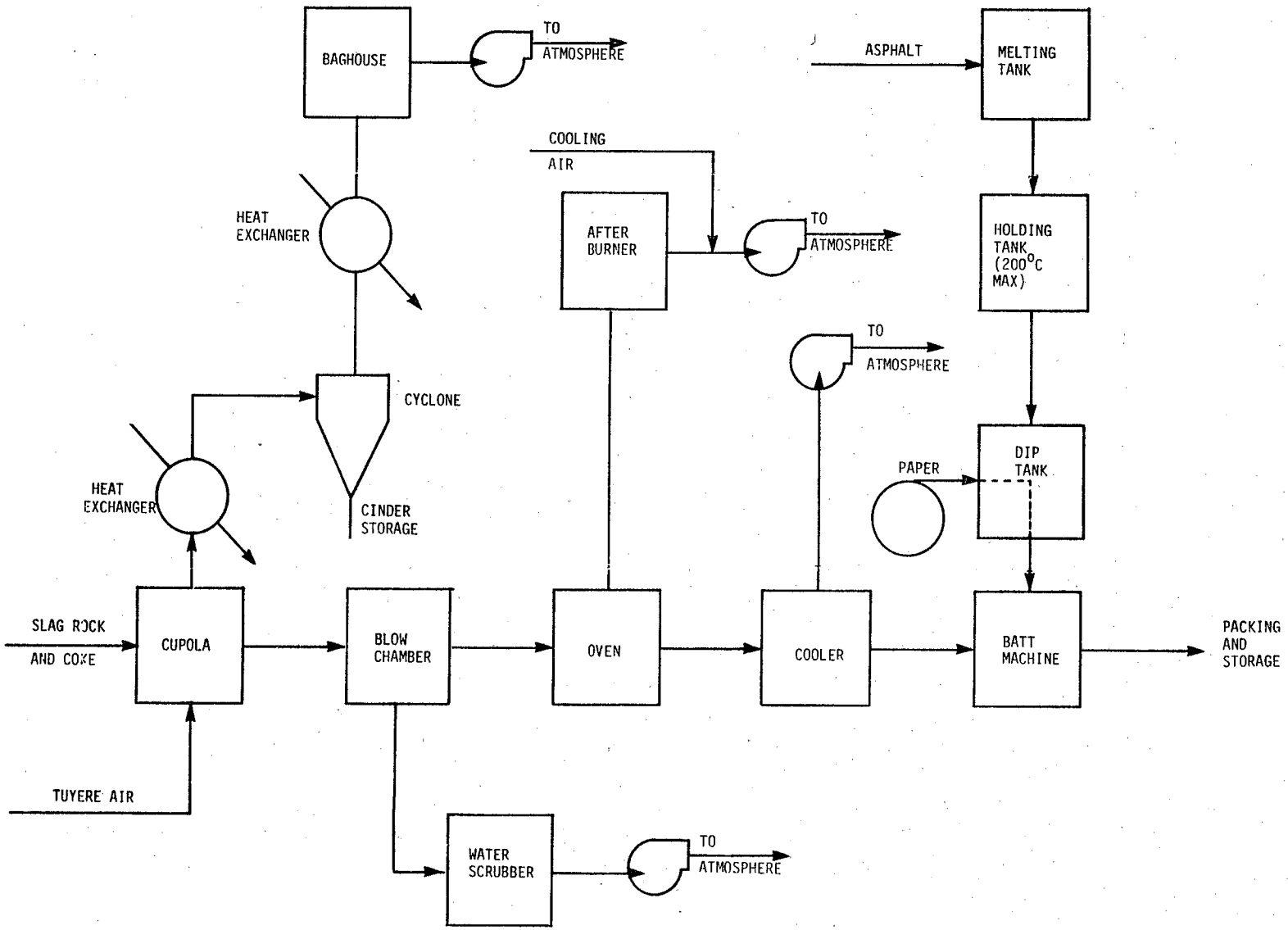

Figure 9.7-29 Flow diagram of mineral wool processing.[32] NOTE: This is a batt line; for loose wool products, the oven and batt machine are eliminated.

Asphalt fumes generated during binder application can become a problem if the temperature of this operation exceeds approximately 200°C. Careful control of the asphalt temperature is usually sufficient; however, the use of a two-stage electrostatic precipitator has been reported to reduce these emissions. A precleaning device must precede the ESP to prevent plate fouling.[59]

Table 9.7-50 summarizes the emission sources and controls used in the mineral wool industry. It should be noted that the controlled emission data shown in the table are results from a limited number of emission tests on different plants using undefined test methods. Therefore, the data may not reflect the relative performance of the various control devices.

Modeling parameters for a typical mineral wool cupola are listed below:[111]

Stack height: 15.25 m
Stack diameter: 0.91 m
Stack gas temperature: 150°C
Stack flow rate: 4.55 m^3s

Modeling parameters for other mineral wool processes are not available.

Table 9.7-50. MINERAL WOOL INDUSTRY EMISSION SCOURCES AND SELECTED CONTROLS[111]

Source	Type of particulate	AP-42 Uncontrolled particulate emission factor, kg/Mg	Control device	Controlled emissions, mg/Nm^3	kg/Mg
Cupola	Combustion products and mineral fines	11	Cyclone	330	1.15
			Wet scrubber	451	1.1
			Failure fitter	46.7	0.21
Blow chamber	Wool fiber, oil & binding agent aerosols	8.5	Wet scrubber	49.4	0.75
			Wet scrubber and ESP	25.2	0.42
Curing oven	Oil and binding agent aerosols	2	Direct-flame afterburner	73.3	0.71
			Catalytic	163	0.95

REFERENCES FOR SECTION 9.7

1. Draft - Non-metallic Mineral Processing Plants, Background Information for Proposed Emission Standards. U.S. Environmental Protection Agency, Office of Air Quality Planning and Standards. Research Triangle Park, NC. March 1980.

2. Jutze, G., et al. Draft - Evaluation of Fugitive Dust Emissions from Mining. U.S. Environmental Protection Agency. EPA Contract No. 68-02-1321. 1979.

3. Augenstein, D. M. Air Pollution Control Techniques for Phosphate Rock Processing Industry. U.S. Environmental Protection Agency. Publication No. EPA-450/3-78-030. June 1978.

4. OAQPS Data File of Nationwide Emissions. U.S. Environmental Protection Agency, Office of Air Quality Planning and Standards. Research Triangle Park, NC. February 1979.

5. Rusek, S. J., et al. Source Assessment: Open Mining of Coal - State of the Art. U.S. Environmental Protection Agency. Publication No. EPA-450/3-78-030. June 1978.

6. Assessment of Environmental Impact of the Mineral Mining Industry. U.S. Environmental Protection Agency. EPA Contract No. 68-03-2479. July 1979.

7. Hankin, M. Is Dust the Stone Industry's Next Major Problem? Rock Products. Chicago, IL. April 1967.

8. Sittig, M. Particulates and Fine Dust Removal. Noyes Data Corporation. Park Ridge, NJ. 1977.

9. Draft Development Document for Effluent Limitations Guidelines and Standards of Performance - Mineral Mining and Processing Industry - Volume I. U.S. Environmental Protection Agency. EPA Contract No. 68-01-2633. January 1975.

10. Metallic Minerals Processing Plants: New Source Performance Standards, Chapter 3. U.S. Environmental Protection Agency. May 18, 1979.

11. Mineral Commodity Summaries. U.S. Bureau of Mines. Washington, DC. 1980

12. Draft - Screening Study for New Source Performance Standards for Metallic Processing Plants. U.S. Environmental Protection Agency. EPA Contract No. 68-02-2607. October 1978.

13. Costel, D. M. Environmental Regulation of the Metal Industry. Journal of Metals. Warrendale, PA. 30:1. January 1978.

14. Duncan, L. J. Analysis of Final State Implementation Plans - Rules and Regulations. Mitre Corporation. McLean, VA. EPA Contract No. 68-02-0248. July 1972.

15. Emission Test Report. Homestake Mining Company. Lead, SD. U.S. Environmental Protection Agency. Research Triangle Park, NC. EMB Report Number 80-MET-7. May 1980.

16. Emission Test Report. Anaconda Copper Company. Butte, MT. U.S. Environmental Protection Agency. Research Triangle Park, NC. EMB Report Number 79-MET-3. January 1980

17. Emission Test Report. Exxon Mineral Company. Converse County, WY. U.S. Environmental Protection Agency. Research Triangle Park, NC. EMB Report Number 79-MET-1. December 1977.

18. Emission Test Report. Cyprus Bagdad Copper Mine. Bagdad, AZ. U.S. Environmental Protection Agency. Research Triangle Park, NC. EMB Report Number 79-MET-4. January 1980.

19. Emission Test Report. Climax Molybdenum Company. Silverthorne, CO. U.S. Environmental Protection Agency. Research Triangle Park, NC. EMB Report Number 79-MET-2. December 1979.

20. Environmental Assessment of Primary Nonferrous Metals Industry Except Copper, Lead and Zinc, and Related By-products Metals. Battelle Columbus Laboratory. Columbus, OH. EPA Contract No. P68-02-1323. February 1977.

21. MacDonald, B. I. Outlook for Copper Industry - Not Bright. Chemical Engineering Progress. New York, NY. 74:9. September 1978.

22. Kosakowski, M. W. Development Document for Interim Final Effluent Limitations Guidelines and Standards of Performance - Mineral Mining and Processing Industry. U.S. Environmental Protection Agency. Publication No. EPA 440/1-76-059a. June 1976.

23. Reding, J. T. Industrial Process Profiles for Environment Use, Chapter 19: The Clay Industry. U.S. Environmental Protection Agency. Publication No. EPA-600/2-77-023s. February 1977.

24. A Screening Study to Develop Background Information to Determine the Significance of Brick and Tile Manufacturing. Research Triangle Institute. Research Triangle Park, NC. EPA Contract No. 68-02-0607. December 1972.

25. Hardison, L. C., and C. A. Greathouse. Air Pollution Control Technology and Costs in Nine Selected Areas. U.S. Environmental Protection Agency. Publication No. APTD-1555. September 1972.

26. Emission Test Report. Building Brick and Structural Clay Industry - Lee Brick and Tile Co. Stanford, NC. U.S. Environmental Protection Agency. Research Triangle Park, NC. EMB Report Number 80-BRK-1. April 1980.

27. Trip Report on General Shale Products Corp. - Brick Plants. U.S. Environmental Protection Agency, Office of Air Quality Planning and Standards, Standards Development Section. File AIP 8-1-14-2. July 19, 1979.

28. Ceilcote Ionizing Wet Scrubber Evaluation. U.S. Environmental Protection Agency. Publication No. EPA-600/7-79-246. November 1979.

29. Vandegrift, A. E., et al. Particulate Pollutant Systems Study, Volume III: Handbook of Emission Properties. Midwest Research Institute. May 1971.

30. Muehlberg, P. E., et al. Industrial Process Profiles for Environmental Use, Chapter 17: The Gypsum and Wallboard Industry. U.S. Environmental Protection Agency, Industrial Environmental Research Laboratory. Research Triangle Park, NC. Publication No. EPA-600/2-77-023q. February 1977.

31. Hopper, T. G., and W. A. Marrone. Impact of New Source Performance Standards on 1985 National Emissions from Stationary Sources. U.S. Environmental Protection Agency. Publication No. EPA-450/3-76-017. April 1977.

32. Formica, P. N. Controlled and Uncontrolled Emission Rates and Applicable Limitations for Eighty Processes. U.S. Environmental Protection Agency. Publication No. EPA-450/3-77-016. September 1976.

33. Gold Bond Building Products, Division of National Gypsum Co. Charlotte, NC. Application for Permit to North Carolina Division of Environmental Management, Air Quality Section. February 22, 1978

34. United States Gypsum Company. Chicago, IL. Construction Permit Application to Texas Air Control Board. June 19, 1979.

35. National Emissions Data System. U.S. Environmental Protection Agency.

36. Nevada Testing Laboratories, Ltd. Las Vegas, NV. Report of Determinations: Stack Emission Investigation Tests No. 3, No. 4, and No. 5, Blue Diamond Plant. NTF Lab No. E-2. September 13, 1973.

37. Flintkote Company. Stamford, CT. Permit Application for Construction at the Sweetwater Texas plant. Submitted to the Texas Air Control Board. November 5, 1979.

38. New Jersey Department of Environmental Protection. Report of Emission Tests. National Gypsum Co. Burlington, NJ. September 6, 1973.

39. Isokinetic Sampling: Empire Gypsum Mill. United States Gypsum Company. Chicago, IL. Report No. 23074, File No. 1-0015. January 28, 1976.

40. Doumas, A. C., et al. Industrial Process Profiles for Environmental Use, Chapter 18: The Lime Industry. U.S. Environmental Protection Agency. Publication No. EPA-600/2-77-023r. February 1977.

41. Standards Support and Environmental Impact Statement, Volume I: Proposed Standards of Performance for Lime Manufacturing Plants. U.S. Environmental Protection Agency. Publication No. EPA-450/2-77-007a. April 1977.

42. Schwartzkopf, F. Lime Burning Technology - A Manual for Lime Plant Operators. Kennedy Van Saun. Danville, PA. 1974.

43. Bunyard, F. L. EPA Trip Report of visit with F. Schwartzkopf of Kennedy Van Saun. U.S. Environmental Protection Agency. Research Triangle Park, NC. September 29, 1975.

44. Schwartzkopf, F. A Comparison of Modern Lime Calcining Systems. Rock Products. Chicago, IL. July 1970.

45. Minnick, L. J. Control of Particulate Emissions from Lime Plants - A Survey. Air Pollution Control Association Journal. Pittsburgh, PA. April 1971.

46. Reding, J. T., et al. Industrial Process Profiles for Environmental Use, Chapter 21: The Cement Industry. U.S. Environmental Protection Agency. Publication No. EPA 600/2-77-023u. February 1977.

47. Mineral Commodity Summaries - 1979. U.S. Bureau of Mines. Washington, DC. 1979.

48. Gagan, E. W. Air Pollution Emissions and Control Technology. Cement Industry Report. Environmental Protection Service, Department of the Environment. Ontario, Canada. Publication No. 3-AP-74-3. 1974.

49. Fine Particle Emissions Information System: Annual Report (1978). U.S. Environmental Protection Agency. Publication No. EPA-600/7-79-126. May 1979.

50. Kreichelt, T. E., D. A. Kemnitz, and S. T. Cuffe. Atmospheric Emissions from the Manufacture of Portland Cement. U.S. Public Health Service. Washington, DC. Publication No. 999-AP-17. 1967.

51. Davis, T. A. and D. B. Hooks. Disposal and Utilization of Waste Kiln Dust from Cement Industry. U.S. Environmental Protection Agency. Publication No. EPA-670/2-75-043. 1975.

52. Kulujian, N. J. Inspection Manual for Enforcement of NSPS, Portland Cement Plant. U.S. Environmental Protection Agency. Publication No. EPA 340/1-75-001. September 1975.

53. Barrett, K. W. A Review of Standards of Performance for New Stationary Sources, Portland Cement Industry. U.S. Environmental Protection Agency. Research Triangle Park, NC. Publication No. EPA 450/3-79-012. March 1979.

54. Manufacturing Process Options, Volume X: Cement Industry Report. U.S. Environmental Protection Agency. EPA 600/7-76-034j. December 1976.

55. Capital and Operating Costs of Selected Air Pollution Control Systems. U.S. Environmental Protection Agency. Publication No. EPA 450/3-76-014. May 1976.

56. Multimedia Assessment and Environmental Research Needs of the Cement Industry. A. T. Kearney, Inc. U.S. Environmental Protection Agency, Industrial Environmental Research Laboratory. Cincinnati, OH. EPA Contract 68-03-2586. January 1979.

57. Ford, R. Practicable Methods of Controlling Particulate Emissions in the Cement Industry. Proceedings of the Air Pollution Control Association Symposiums, Quebec Section. Air Polution Control Association. Pittsburgh, PA. 1975.

58. Technical Guidance for Control of Industrial Process Fugitive Particulate Emissions. U.S. Environmental Protection Agency, Office of Air Quality Planning and Standards. Research Triangle Park, NC. Publication No. EPA 450/3-77-010. March 1977.

59. Air Pollution Engineering Manual, Second Edition. U.S. Environmental Protection Agency. Publication No. AP 40. May 1973.

60. Brooks, K. J., et al. A Review of Standards of Performance for New Stationary Sources - Asphalt Concrete Plants. Mitre Corporation. McLean, VA. Publication No. MTR 7826. January 1979.

61. Atmospheric Modeling Data from National Emission Data Systems (NEDS). U.S. Environmental Protection Agency, Office of Air Quality Planning and Standards. Research Triangle Park, NC. May 1979.

62. Fine Particulate Emissions Information System: Annual Report (1978). U.S. Environmental Protection Agency. Publication No. EPA-600/7-79-126. May 1979.

63. Khan, Z. S., and T. W. Hughes. Source Assessment: Asphalt Hot Mix. U.S. Environmental Protection Agency. Publication No. EPA-600/2-77-107n. December 1977.

64. Background Information for Proposed New Source Performance Standards: Asphalt Concrete Plants, Volume 2. U.S. Environmental Protection Agency. Publication No. APTD 1532b. June 1973.

65. The Operation of Exhaust Systems in the Hot Mix Plant - Efficiency and Emission Control. National Asphalt Pavement Association. Riverdale, MD. Information Series 52. 1975.

66. Background Information for Proposed Standards, Asphalt Roofing Manufacturing Industry. U.S. Environmental Protection Agency. Publication No. EPA-450/3-80-021a. June 1980.

67. Laster, L. L. Atmospheric Emissions from the Asphalt Industry. U.S. Environmental Protection Agency. Publication No. EPA-650/2-73-046. December 1973.

68. Gorman, P. G. Control Technology for Asphalt Roofing Industry. U.S. Environmental Protection Agency. Publication No. EPA-600/2-76-120. April 1976.

69. Spinosa, E. D., and R. A. Newton. Chemical Analysis of Particle Size Fractions of the Particle Catch from Glass Melting Furnaces. U.S. Environmental Protection Agency, Industrial and Environmental Research Laboratory. Cincinnati, OH. EPA Contract No. 68-03-2552. March 1979.

70. Schorr, J. R., D. T. Hooie, M. C. Brockway, P. R. Sticksel, and D. E. Niesz. Source Assessment: Pressed and Blown Glass Manufacturing Plants. U.S. Environmental Protection Agency, Industrial and Environmental Research Laboratory. Research Triangle Park, NC. Contract No. 68-02-1323. NTIS 600/2-77-005, Task 37. January 1977. Appendix A.

71. Reznik, R. B. Source Assessment: Flat Glass Manufacturing Plants. U.S. Environmental Protection Agency, Industrial and Environmental Research Laboratory. Research Triangle Park, NC. Contract No. 68-02-1874. NTIS 600/2-76-032b. March 1976. Appendix B.

72. Schorr, J. R., D. T. Hooie, P. R. Sticksel, and C. Brockway. Source Assessment: Glass Container Manufacturing Plants. U.S. Environmental Protection Agency, Industrial and Environmental Research Laboratory. Research Triangle Park, NC. Contract No. 68-02-1323. NTIS 600/2-76-269, Task 37. October 1976.

73. The Glass Industry Directory Issue 1976-1977. The Glass Industry. New York, NY. 57(10). 1976-1977.

74. Final Report of Screening Study to Determine Need for Standards of Performance for New Sources in the Fiberglass Manufacturing Industry. U.S. Environmental Protection Agency. Industrial Studies Branch. Research Triangle Park, NC. Contract No. 68-02-1332, Task 23. December 1976. Tables 4 and 5.

75. U.S. Department of Energy. Voluntary Industrial Energy Conservation, Progress Report No. 5. July 1977. Page 81.

76. U.S. Bureau of Census. Current Industrial Reports, Flat Glass Fourth Quarter 1976. MQ-32A(76)-4. February 1977.

77. Glass Packaging Institute 1977 Annual Report. Glass Packaging Institute. Washington, DC.

78. U.S. Bureau of Census. Current Industrial Reports, Glass Containers Summary for 1976. M 32G(76)-13. May 1977.

79. U.S. Bureau of Census. Current Industrial Reports, Consumer, Scientific, Technical, and Industrial Glassware. MA-32E(76)-1. 1976.

80. Reference 73, Table 1.

81. U.S. Bureau of Census. Current Industrial Reports, Fibrous Glass 1976. MA-32J(76)-1. June 1977.

82. Reference 69, page 4.

83. Hutchings, J. R., and R. V. Harrington. Glass. In: Encyclopedia of Chemical Technology, Second Edition. Kirk and Othmer. John Wiley and Sons. New York, NY. 1966. Page 549.

84. Danielson, J. A. (ed.). Air Pollution Engineering Manual. National Center for Air Pollution Control. Cincinnati, OH. Public Health Service Publication No. 999-AP-40. 1967.

85. Santy, M. J. Particulate Control Through Process Modification Chemical System Screening. Prepared for Glass Container Manufacturers Institute. New York, NY. December 1971. Phase II, page 2.

86. Stockham, J. D. The Composition of Glass Furnace Emissions. Journal of the Air Pollution Control Association. 21:713-175. November 1971.

87. Reference 69, page 45.

88. Reference 84, page 730.

89. Ryder, R. J., and J. J. McMackin. Some Factors Affecting Stack Emissions From a Glass Container Furnace. The Glass Industry. 50: 307-311. June 1969.

90. Reference 69, Table 7.

91. Reference 70, Table 8.

92. Reference 71, Table 8.

93. Reference 73, Table 9.

94. Reference 73, Table 11.

95. O'Sullivan, W., Krauss, C., and Londres, E. Fuel Oil Particulate Emissions From Direct Fired Combustion Sources. New Jersey Bureau of Air Pollution Control. Trenton, NJ. January 26, 1976.

96. Preliminary Data from Emission Tests on Uncontrolled Glass Furnaces. U.S. Environmental Protection Agency, Industrial and Environmental Research Laboratory. Cincinnati, OH. April 1978.

97. OAQPS Data File of Nationwide Emissions. U.S. Environmental Protection Agency, Office of Air Quality Planning and Standards. Research Triangle Park, NC. February 1979.

98. Spinosa, E. D. and R. A. Newton. Chemical Analysis of Particle Size Fractions of the Particle Catch from Glass Melting Furnaces. U.S. Environmental Protection Agency, Industrial and Environmental Research Laboratory. Cincinnati, OH. EPA Contract No. 68-02-2552. March 1979.

99. Draft Background Information Document. Proposed Standards of Performance: Glass Manufacturing Plants. U.S. Environmental Protection Agency, Office of Air Quality Planning and Standards. Research Triangle Park, NC. June 1979.

100. Losel, R. E. Practical Data for Electric Melting. *The Glass Industry*. February 1976. Page 26.

101. Schorr, J. R., et al. Source Assessment: Pressed and Blown Glass Manufacturing Plants. EPA Contract 68-03-1326. NTIS 60/2-77-005. Task 37, Page 103.

102. Teller, A. J. Control of Furnace Emissions. The Glass Industry. New York, NY. February 1976. Page 22.

103. Corning Glass Response to 114 Questionnaire by EPA. Corning, NY. October 12, 1977.

104. Glass Container Corporation Response to 114 Questionnaire by EPA. Fullerton, CA. October 14, 1977.

105. Reference 71, page 79.

106. Custer, W. Electrostatic Cleaning of Emissions from Lead, Borosilicate, and Soda-Lime Furnaces. In: Collected Papers of the 35th Annual Conference on Glass Problems. University of Ohio. Columbus, OH. 1974.

107. Communication at meeting of Owens/Corning Fiberglass representatives and Dave Powell of PES. Pacific Environmental Services. Santa Monica, CA. September 29, 1977.

108. Liu, C. T. Screening Study for Background Information and Significant Emissions from Fiberglass Manufacturing. Vulcan-Cincinnati, Inc. Cincinnati, OH. December 1972.

109. Environmental Considerations of Selected Energy Conserving Manufacturing Process Options, Volume XI: Glass Industry Report. U.S. Environmental Protection Agency. Publication No. EPA-600/7-76-034. December 1976.

110. Compilation of Air Pollution Factors, Second Edition. U.S. Environmental Protection Agency. Publication No. AP-42. April 1973.

111. Source Category Survey: Mineral Wool Manufacturing Industry. U.S. Environmental Protection Agency. Publication No. EPA-450/3-80-016. March 1980.

Page Intentionally Blank

9.8 METALLURGICAL INDUSTRY

Fugitive and process particulate emissions from the following segments of the metallurgical industry are discussed in this section:

9.8.1 Iron and steel
9.8.2 Ferroalloy production
9.8.3 Gray iron foundries
9.8.4 Steel foundries
9.8.5 Primary aluminum
9.8.6 Primary copper smelter
9.8.7 Primary lead smelter
9.8.8 Primary zinc smelter
9.8.9 Secondary aluminum operations
9.8.10 Secondary copper smelting and alloying
9.8.11 Secondary lead smelting
9.8.12 Secondary zinc processing

The metallurgical industry is a major source of particulate emissions. Furnace operations in the industry are the primary source of process particulate emissions. In most cases, the furnaces employed in the metal production operations discharge high temperature exhaust effluents which must be cooled and often further conditioned before ducting to a control device. The control device must usually be capable of high efficiency collection of submicrometer particles, especially in processes where oxygen lancing is used. Iron and steel plant furnaces, such as basic oxygen furnaces, emit as much as 80 percent of particulates below 1 micrometer in diameter.

Fugitive emissions from metallurgical processes are also a significant source of particulate emissions. In general, fugitive emissions occur during loading and unloading of the raw materials on the plant premises, transfer and conveying, storage, charge to the furnace, travel on unpaved plant haul roads, and truck traffic to and from the processes. Section 5 of Volume 1 discusses the control of industrial process fugitive emissions common to many industrial operations (e.g., storage and plant haul roadways). A discussion is presented in each subsection below of the control of fugitive emissions sources that are more specific to the industry segment being evaluated.

Particle size distribution data are included in each subsection. In many cases, when available, chemical characteristics of the emissions are also provided for different processes as well as secondary environmental impact information.

9.8.1 Iron and Steel Plants

This section discusses sources of particulate emissions and their control techniques. The processes include the following:

9.8.1.1 Coke ovens
9.8.1.2 Sintering
9.8.1.3 Blast furnace
9.8.1.4 Open hearth furnace
9.8.1.5 Basic oxygen furnace
9.8.1.6 Electric arc furnace
9.8.1.7 Rolling, shaping, and finishing
9.8.1.8 Scarfing

Figure 9.8.1-1 shows a flow diagram for the above processes in a typical integrated iron and steel plant.[1]

9.8.1.1 Coke Ovens. Coke is a carbon material produced by the destructive distillation of coal. Coke is manufactured by heating coal in the absence of oxygen to drive off the volatile compounds. It is used in iron and steel foundries and, more often, in integrated steel mill blast furnaces. Coke plants are either an integral part of steel mills or are located in the vicinity of iron and steel manufacturing facilities. About 99 percent of the United States coke production is made in "by-product" (or slot-oven) coke ovens, with the remaining coke being made in beehive ovens from which by-products are not recovered.[2] Sixty-five plants with 13,324 ovens grouped in 213 batteries produce coke. These plants tend to be concentrated north of the Ohio River and east of the Mississippi River.

Coke oven batteries range in size from relatively small batteries to newer, larger batteries. Table 9.8.1-1 lists typical products from a by-product coking plant. About 40 percent of the coke oven gas is returned to the oven and used as process fuel to heat the oven. Because of the relatively high heating value of this gas, it is an important source of fuel gas for other operations in an integrated iron and steel mill.

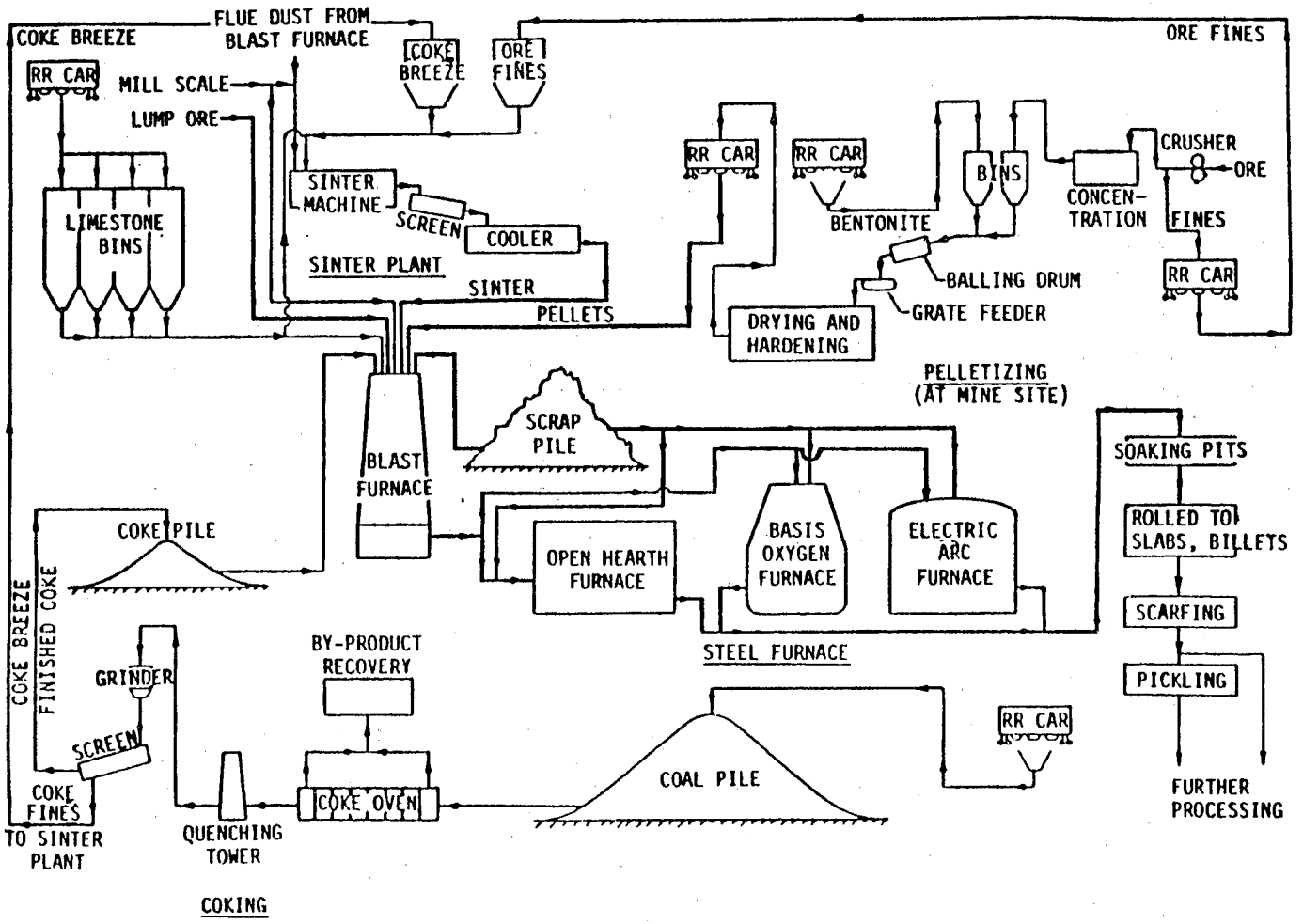

Figure 9.8.1-1 A composite flow diagram for a steel plant.[1]

Table 9.8.1-1. COKE AND COAL CHEMICALS PRODUCED BY U.S. COKE PLANTS IN 1978[2]

Product	Yield Per megagram coal charged
Coke	0.6878 megagram
Breeze	0.0531 megagram
Crude tar	34.75 liters
Crude light oil	10.22 liters
Ammonia (sulphate equivalent)	6.77 kilograms
Coke oven gas	331 cubic meters[a]

[a]Estimated.

Approximately 82 Tg of coal is consumed per year in the production of coke. The compound annual growth rate for this industry is estimated to be one percent.[3] Nationwide particulate emissions in 1977 were estimated to be 108 Gg per year from the by-product coking process and 54 Gg per year from the beehive process.[4]

9.8.1.1.1 Process description and emissions. The by-product plant coke production process can be divided into the following three subprocesses:

- o Coal preparation
- o Coke production (thermal distillation)
- o By-product production

Coal preparation involves the blending and pulverization of coal. Blending is done in order to develop the desired coke properties, to obtain the optimum types and quantities of by-products. The coal is pulverized in order to produce the desired physical properties in the coke. The coal is then either charged into the ovens by the use of a larry car which fills the ovens through charge holes in the roofs of the ovens, or the coal is heated and dried before charging. Traditionally, coke ovens have been charged with "wet" coal, which contained 6 to 11 percent water by weight. In the dry-coal charging process, moisture is driven off in the drying process, and the hot coal is then charged into the coke oven by means of a pipeline, a mechanical conveyor, or a hot larry car. Dry coal charging has only recently been applied commercially. However, of the nine coke oven batteries recently built, five of these employ dry coal charging.[5]

The coal is typically heated 15 to 18 hours to produce blast-furnace coke and 25 to 30 hours for foundry coke. The heating occurs in long narrow ovens in the absence of oxygen until a temperature of about 900 to 1100°C is reached.[6] The ovens have typical dimensions of 3.6 to 6.7 meters in height, 12.2 to 16.8 meters in length, and 0.36 to 0.51 meters in width. The ovens share common walls and are heated by a regenerative combustion system located underneath.[2]

The volatile components in the coal are driven off, leaving the high carbon content, non-volatile coke in the oven. At the end of the heating cycle, the doors are opened on both sides of the coke oven, and the incandescent coke is pushed from the oven into a special hopper rail car

(called a quench or hot coke car) by a mechanical ram. The hot coke in the quench car is then moved to a "quench tower" where the hot coke is cooled by the addition of large quantities of water. The coke is then discharged from the quench car, allowed to drain and cool, and then crushed and screened. The coke can then be used as a fuel and a reducing agent for the production of iron. Any small size coke (breeze) produced as a result of the crushing and screening is usually used in other steel-plant processes or sold.

The volatile components or gases driven off by the coke oven heating process are transferred from the oven by exhaust offtake pipes (called standpipes or ascension pipes) into the collector main and directed to the by-product plant, where the gases are cooled to 80 to 100°C by spraying with water. About 20 to 35 percent of the initial coal charge is volatilized. Tars and other viscous materials are condensed in the water, and separated from the water or flushing liquor in a decanter. Ammonia can be recovered either as an aqueous solution or as a salt (e.g., ammonium sulfate). The remaining gas is rich in hydrogen and methane and has a heating value of about 20.5 MJ/Nm^3. This gas is then combusted in the oven underfiring combustion system and used to heat the ovens; the gas is also used in other steel production processes.

Figure 9.8.1-2 presents a flow sheet showing the major steps in the coking of wet coal using the by-product process, including the by-product recovery steps. Figure 9.8.1-3 presents a schematic of a coke battery, with emission points shown. The primary sources of dust and smoke in the coal by-product coking process described are as follows:

- Unloading, handling, and stockpiling coal
- Handling, crushing, screening, and blending coal
- Drying and heating of coal (dry coal charged batteries only)
- Charging of coal into the coke ovens
- Smoke leakage from charging lids and standpipes
- Underfiring of coke ovens (battery stacks)
- Smoke leakage around coke oven doors
- Pushing of coke from the ovens
- Quenching of hot coke
- Handling, crushing, and screening of coke

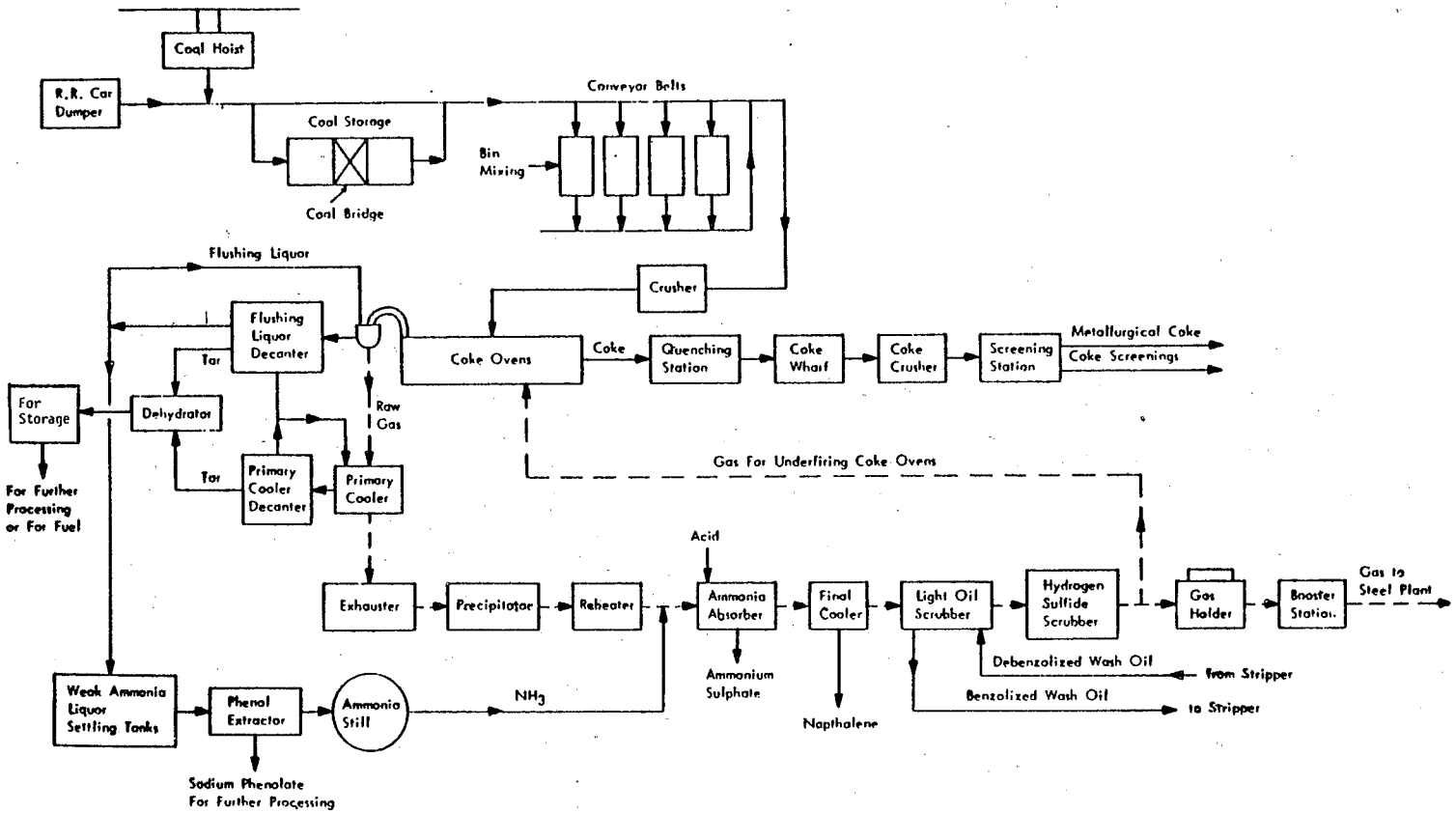

Figure 9.8.1-2 Flow sheet showing the major steps involved in the carbonization of coal using the by-product process and the subsequent recovery of coal chemicals from the gases generated at the ovens.[2]

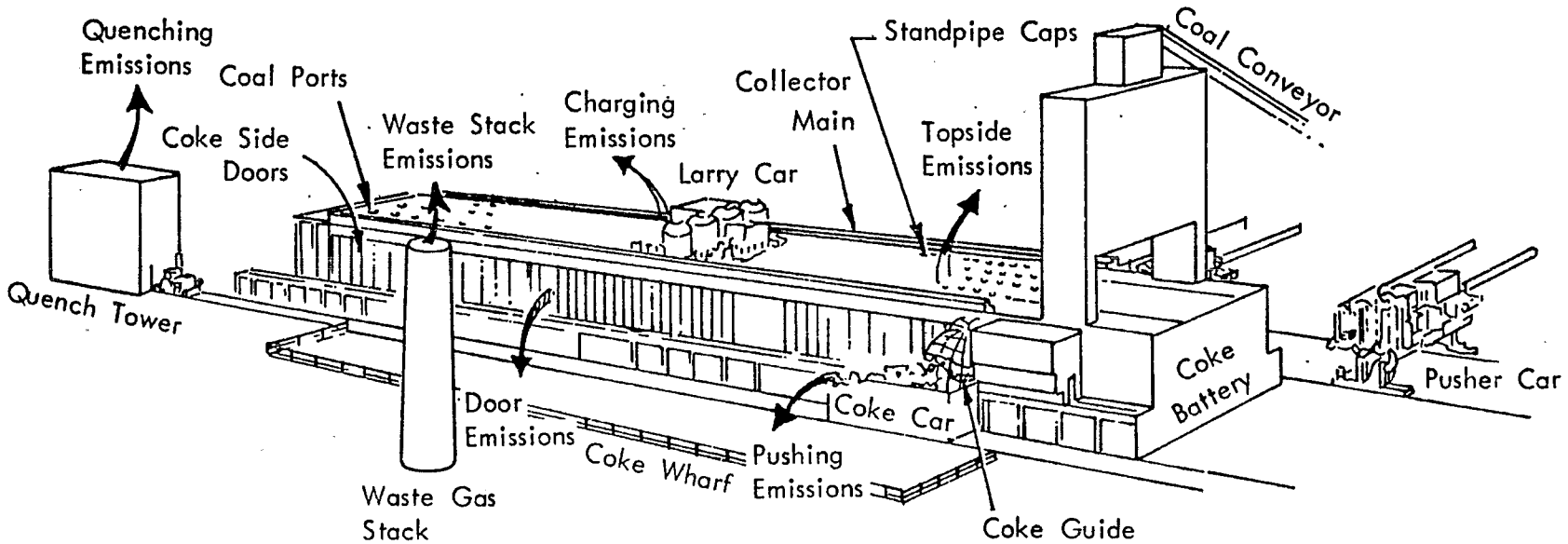

Figure 9.8.1-3 Schematic diagram of a coke battery.[7]

The processes of unloading, handling, stockpiling, crushing, screening and blending of coal and the handling, crushing, and screening of coke are all potential sources of fugitive emissions of coal and coke dust particles to the atmosphere. Control techniques applicable to these emissions are discussed in Section 5 of Volume 1.

The charging of coal into a hot incandescent coke oven results in the formation of a large volume of steam, gases, and smoke, which is forced from the oven by the resulting increase in pressure. The steam and the gases result from the evaporation of any moisture present and from other volatile components. The smoke results from particles and fumes entrained with the gases. Emissions will occur at any oven opening to the atmosphere, such as out an open charge port. Particles emitted during the charging cycle have been identified as coal coke balls, pyrolitic carbon, high-temperature coke, char, coal, mineral matter, and flyash.

After charging, the charging lids and standpipes must be sealed. Improperly fitted lids, cracks, and broken seals in the standpipes will result in particulate emissions. These emissions are expected to have properties similar to those resulting from charging, without the larger particles of coal and coke.[2]

In the by-product plant, the various tars, light oils, phenol and ammonia are removed from the raw coke oven gas, and the remaining combustible gas is then used to heat the ovens. In some plants, combustible by-product gas from blast furnaces is used to heat coke ovens, and the coke oven gas of higher heating value is used in other plant processes.[7] Almost all coke batteries are modified using natural drafts provided by a tall stack. Figure 9.8.1-4 presents a schematic of several types of oven heating flue designs. The particulate matter emitted by coke oven modified combustion stacks is very small in size. Data from impactor sampling showed that 40 to 95 percent of the particulate matter is smaller than 1 micrometer in diameter with an average of 90 percent smaller than 3 micrometers.[3] These emissions are primarily the result of cracks in oven walls which cause dust and coke pyrolysis products to leak into the exhaust flues.

The end of each coke oven has refractory-lined doors that are opened during the coke discharge or pushing operation and closed again during the

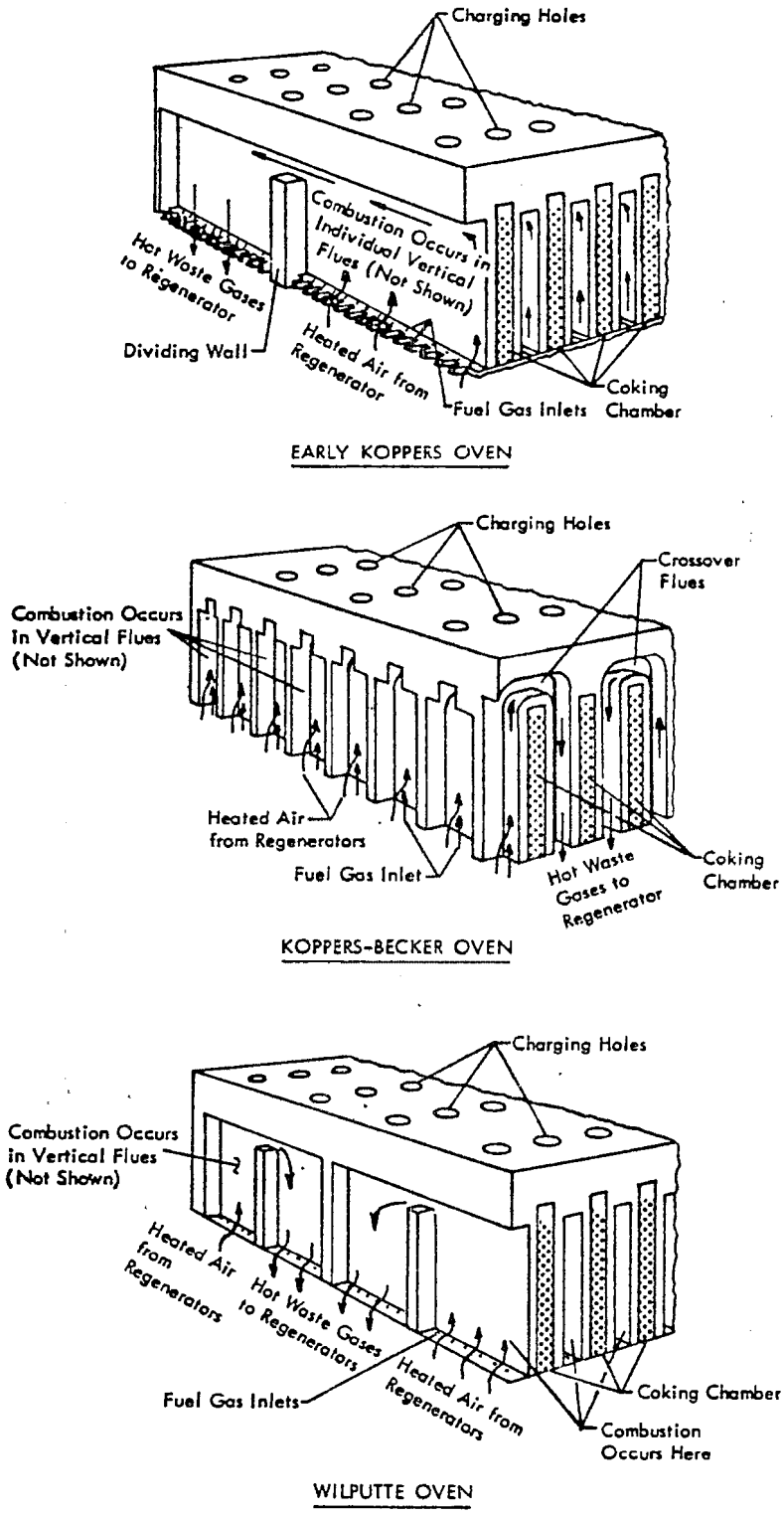

Figure 9.8.1-4 Schematic diagram of three common flue designs.[7]

charging and coking operations. If these doors are not sealed properly, particulate emissions will leak from any gaps between the door and the oven doorjam. The pushing of the hot incandescent coke from the ovens into the charge car may result in a significant quantity of particulate emissions (mostly coke dust). Emissions are particularly severe if the coal has not been adequately coked and the remaining volatile products burn as the charge is exposed to oxygen during the pushing operation.[8] The particulate matter from inadequately coked coal will contain coal dust and coke dust mixed with condensed tars.[6]

The rail car containing the hot coke charge is moved to a quench tower, where it is cooled by the application of water to the hot coke. This results in the formation of a steam plume which tends to mask the particulate in the plume and makes particulate sampling difficult. The limited work that has been performed to size quench tower particulate emissions shows that the majority of particles from a controlled quench tower (i.e., a tower with a baffle system) are less than 10 micrometers in diameter; particulate emissions are greater than 10 micrometers in diameter for an uncontrolled quench tower.[9]

The stack parameter data for emission sources in metallurgical coking operations are summarized in Table 9.8.1-2.[10] Table 9.8.1-3 gives an indication of the size distribution of emissions from coke pushing during the maximum emission periods. At this time, these are the only data available in the EPA Fine Particulate Emissions Information System (FPEIS) data base.

9.8.1.1.2 Particulate control techniques.

Charging--The control of charging emissions can be accomplished by the following three methods:

- Stage charging
- Sequential charging
- Scrubber control systems

Scrubber control systems which represented initial efforts to curtail charging emissions utilize a scrubber mounted on the larry car to control emissions captured by hooding devices at the charging ports. EPA concluded that such systems are costly, complex, and susceptible to severe maintenance problems, and that they have the additional problem of scrubber water disposal.[2] Few if any such systems are still in operation.

Table 9.8.1-2. STACK PARAMETERS FOR BYPRODUCT METALLURGICAL COKE MANUFACTURING EMISSION SOURCES[10]

Facility or operation	Nationwide number of facilities or operations	Average emission source, m	Average emission source diameter, m	Average temp., °C	Average flow, Am^3/s	Average operating rate, Gg of load charged per facility, per year
Oven charging	92	62	2.8	291	40.8	435
Oven pushing	65	67	2.9	380	45.6	383
Quenching	84	34	5.3	107	131.0	511
Unloading	7	38	6.1	64	81.8	345
Underfiring	60	70	3.0	228	44.3	387
Coal crushing/handling	9	42	1.0	21	7.53	609

Table 9.8.1-3. SIZE SPECIFIC EMISSIONS FROM COKE PUSHING[a]

	Mass concentration, mg/DNCM(mass percent less stated size)							
	Total	15.3 μm	12.9 μm	10.1 μm	7.28 μm	5 μm	2.5 μm	1.01 μm
Uncontrolled	283	274(97.0)	273(96.6)	271(95.8)	266(94.0)	257(90.9)	211(74.6)	176(62.2)

[a]Coke oven pushing during 2-6 minute maximum emission period. No control device.

Stage charging is a procedure for charging coal into coke ovens in such a manner that the passageway to the offtake gas collection system remains open. The gases and particulate emissions generated in the oven are drawn into the collector main by steam aspiration (or aspiration using a liquor) at the standpipe and exhausted by the regular gas handling equipment into the by-product recovery plant. This technology is identified as the best control technology for wet-coal charging.[2] Sequential charging differs from stage charging only in that the oven is charged more rapidly than in stage charging, thus producing gases and particulate matter are generated at a faster rate.

Providing either an adequate degree of aspiration or a slightly negative oven pressure is the key to a successful stage charging operation. Aspiration efficiency is very sensitive to flow and pressure maintained at the aspirator nozzle. Also, for the system to work properly, the door and charge openings must be minimized, and the standpipe leading to the aspirator must be kept clean. Figure 9.8.1-5 shows a sketch of a typical oven aspiration system.

Batteries which have ovens fitted with gas offtake standpipes on only one side must be modified for stage charging to provide adequate aspiration of emissions into the collector main. This can be achieved in two ways: (1) by retrofitting the entire battery so that every oven has another offtake standpipe at the other side, connected to a second collector main installed along the length of the battery; or (2) by retrofitting or replacing the charge car so that a jumper pipe is installed which permits emissions generated during charging to be drafted into an adjacent oven and thus be directed into the single collector main through the standpipe of the adjacent oven.

Topside Leaks--The best control technology for the control of emissions from charging lids and standpipes (topside leaks) essentially involves proper maintenance and replacement of oven closure devices, sealing (luting) of lids and standpipes, inspection, and resealing. The following list details these considerations:[2]

- Replacement of warped lids.
- Cleaning carbon deposits or other obstructions from the mating surfaces of lids or their seats.

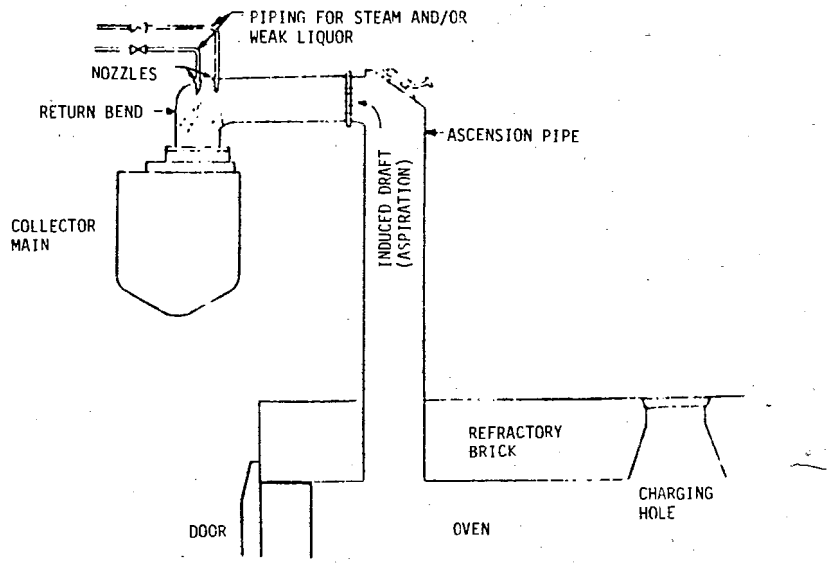

Figure 9.8.1-5 A typical aspiration system operating in the return bend of the gas-collection duct.[2]

- Patching or replacing cracked standpipes.
- Sealing lids after a charge or whenever necessary with a slurry mixture of clay, coal, and other materials (commonly called lute).
- Sealing cracks at the base of a standpipe with a slurry mixture.

Battery Stacks--Control techniques for battery stacks are broadly grouped into two categories: (a) operating and maintenance practices, and (b) add-on control devices.[11]

Operating and maintenance practices encompass inspection, diagnosis, and adjustment or maintenance, on some scheduled or routine basis. These procedures vary from plant to plant; most plants utilize some of the practices to some degree. Also, the needs of one plant may differ from another, depending on battery age and condition and other factors. These procedures are aimed at preventing emissions by maintaining proper firing conditions and by minimizing leaks between the oven space and the flue system.

Other means of controling stack emissions involve the use of add-on control devices. Even with the use of such devices, however, some of the operating and maintenance techniques discussed would probably still need to be employed to maintain battery emissions at levels that would not overload the control device and maintain coke quality.

Only two types of add-on control devices are presently used on coke oven battery stacks: dry electrostatic precipitators and fabric filters. Other add-on devices that have been pilot tested on battery stacks include: a wet electrostatic precipitator, a charged droplet scrubber (pilot and full scale), and an afterburner.

While operating and maintenance practices are used at almost all plants, the diligence or frequency of their use varies, and some practices are unique to one or a few plants. The following paragraphs describe the most common operating and maintenance practices.

Probably the most common operating practice, for minimizing battery stack emissions, is adjustment of the fuel/air mixture. Such adjustments may be made by changes in the stack draft damper or changes in the "fingerbars" that limit the air drawn into the flues of each oven. These adjustments may be made on the basis of visual observations of the stack, or on the basis of the continuous oxygen monitor that some plants use. Sometimes the excess air

level is increased in an attempt to reduce stack emissions, but this may be only a temporary measure, until the cause of the problem can be diagnosed.

Another operating practice that affects stack emissions is "decarbonization." This is a common practice, intended to remove buildup of carbon at the top of the ovens; it is important for the control of emissions during oven charging. Some carbon buildup, however, helps minimize wall and roof leaks. Therefore, the decarbonization may be decreased at times to increase the carbon buildup and thus help seal leaks.

A common, routine maintenance practice is the cleaning of fuel nozzles that flue cap inspections indicate may be partially plugged. The frequency with which this is done depends, of course, on the inspection frequency. Nozzle problems may also lead to excess fuel in the flues, especially in gun-flue batteries.

Probably the most common coke oven maintenance practice for maintaining coke quality and minimizing wall leakage is end-flue patching. End-flue repairs usually involve a scheduled maintenance program in which end-flue cracks are patched routinely using a hand-held slurry patching gun. Patching is usually done routinely, and whenever wall inspections indicate additional patching is needed. Thus, the frequency of patching varies from plant to plant. For example, ovens at U.S. Steel-Fairfield are patched at least once every 3 months, while those at Kaiser Steel are patched every 1 to 1-1/2 months. At CF&I, the coke side is patched twice; the pusher side, once every 5 weeks. In addition, at CF&I, each oven is inspected once every 3 days and additional patching done if necessary.

Some of the above common operating and maintenance practices are also used in conjunction with other special maintenance techniques, such as silica dusting and mobile gunning. Silica dusting is a supplementary maintenance technique used for sealing small cracks in oven walls by blowing finely ground silica powder into a sealed oven. The silica dust fills the cracks in all wall areas of the oven. Mobile gunning is an alternate patching technique used in conjunction with inspection, diagnosis, and other common maintenance practices. Mobile gunning supplements hand-held spray patching of wall cracks. Cracks in the interior portion of oven walls and roof not reachable

by hand-held patching can be patched by mobile gunning. In recent years, mobile gunning has been placed in service at a number of plants.

Diligent and rigorous use of most of these common practices would help minimize stack emissions. The most diligent use of such practices, defined as "systematic operation and maintenance," involves more frequent end-flue patching plus additional manpower for other inspections, diagnoses, and maintenance.

Battery stack emission test data were available for only one battery that used systematic operation and maintenance--a 31-oven, gun-flue battery rebuilt in 1960. Battery stack tests (three runs each) were conducted in June 1978[12] and August 1979.[13] Average particulate concentrations by EPA Method 5 were 0.055 g/Nm^3 and 0.089 g/Nm^3, respectively. Mass emissions of the 1978 test were 1.67 kg/hr or 81 g/Mg of coal based on a coking time of 25.5 hours. Mass emissions of the 1979 test were 3.15 kg/hr or 109 g/Mg of coal based on an 18-hour coking time. These tests showed the highest 6-minute average opacity to be only 11 percent.

Dry electrostatic precipitators (ESPs), one of two types of control devices used on coke oven battery stacks, are basically similar to fly ash precipitators used in coal-fired power plants. Full-scale dry ESPs have been installed on five coke oven battery stacks in the United States. These batteries are listed in Table 9.8.1-4 along with some of the operating and design parameters for each installation. The parameters reflect the fact that control of battery stack effluents by dry ESPs requires a relatively high specific collection area, multiple stages, and low gas velocity, in order to offset: (a) low inlet dust concentration, (b) small particle size, and (c) low resistivity. The paticulate emission test results presented in Table 9.8.1-5 of full-scale battery stack ESPs shows a wide variation in collection efficiencies.[14,15,16] The negative efficiency for the National Steel battery may be partly due to an error in measurement of gas flow rate, which averaged 21 percent higher at the ESP outlet than at the inlet.

Particulate removal by fabric filters is usually highly efficient, even for fine particles; therefore, this add-on device has been used in many applications. In addition, fabric filters have the advantages of dry dust recovery and minimal equipment corrosion problems. There are, however, some

TABLE 9.8.1-4 COMPARISON OF ELECTROSTATIC PRECIPITATOR INSTALLATIONS

Operating and design parameters	Lone Star Steel	Armco Houston Works		USS Clairton	National Steel Granite City, Illinois
BATTERY NUMBER	A & B	1	2	21	C
Number of ovens	78	47	15	87	61
Age of battery	35 yr	36 yr	25 yr	Rebuilt in 1972	18 yr
Year installed	1973	1976	1976	March 1979	March 1979
Gas flow rate, am^3/min	3,767	1,869	425	4,616 (design)	2,605
Inlet loading, g/Nm^3	0.135	0.018[a]	0.169[a]	0.061 (tested 1975)	0.648
Outlet loading, g/Nm^3	0.087	0.014[a]	0.023[a]	Not yet tested	0.487
Efficiency, %	35	25	86	90 (vendor guarantee)	Neg.[b]
Gas velocity, m/sec	1.3	0.6	0.7	0.7	0.9
SCA, $m^2/1{,}000\ m^3\ min^{-1}$	1,122	1,909	1,909	1,912	1,955-2,936
Number of stages	3	3	3	Unknown	4

[a]Tests were conducted when battery was underfired with natural gas.
[b]Test showed negative efficiency.

TABLE 9.8.1-5. PERFORMANCE DATA FOR ELECTROSTATIC PRECIPITATOR CONTROL OF COKE OVEN BATTERY STACK PARTICULATE EMISSIONS[a,b,c]

Test	Particulate loading (g/Nm^3)[a]		Particulate emissions (kg/hr)[a]		Collection efficiency (weight %)	Outlet particulate emissions	
	Inlet	Outlet	Inlet	Outlet		g/Mg	g/hr/Mg
Lone Star Steel[14] E. B. Germany Works Batteries A and B[b] (February 1973)							
Test No. 1	0.1156	0.0995	7.39	6.44	12.9	143	6.30
Test No. 2	0.1050	0.0714	6.67	4.49	32.7	99	3.68
Test No. 3	0.1849	0.0883	11.48	5.76	49.8	128	4.72
Armco Steel[15] Houston Works Battery 1 (November 1976)							
Test No. 1	0.0211	0.0211	1.38	1.35	2.2	35.9	1.71
Test No. 2	0.0178	0.0110	1.18	0.78	33.9	20.7	0.99
Test No. 3	0.0156	0.0087	1.03	0.56	45.6	14.9	0.71
Armco Steel[15] Houston Works Battery 2 (November 1976)							
Test No. 1	0.1721	0.0291	2.42	0.48	80.2	41.9	1.90
Test No. 2	0.0746	0.0126	1.07	0.22	79.4	19.2	0.87
Test No. 3	0.2590	0.0254	3.97	0.42	89.4	36.7	1.67
National Steel[16] Granite City Battery C (July 1979)							
Test No. 1	0.923	0.847	63.8	70.4	Neg.	2,505	129
Test No. 2	0.371	0.375	25.1	25.1	Neg.	1,160	58
Test No. 3	--[c]	0.240	--[c]	19.1	--		35

[a]Probe, cyclone, and filter catch (EPA Method 5).
[b]Combined stack.
[c]Invalid sample.

disadvantages. Since filter units are usually rather large, installation space may be a problem. Fabric filters also involve much higher pressure drops: on the order of 1.0 to 2.3 kPa, compared to 0.5 kPa or less for dry ESPs. Also, when handling combustible dust such as that emitted from a battery stack, there is a potential fire hazard. For example, at the Kaiser Steel Company's Fontana plant, some fire damage occurred in part of the compartments on one of the fabric filters. Kaiser believes the fire was caused by misoperation of the battery, which increased the oxygen level in the flue gas. Kaiser has taken precautions to protect the filters from such occurrences.

Four fabric filter units have been placed in service at Kaiser Steel-Fontana, and the company plans to install fabric filters on all seven batteries at that plant, the only plant that has installed fabric filters for control of battery stack emission.

Operating parameters in Kaiser's graphite-silicone treated, glass-fiber, reverse air-cleaned filters are: a net air-to-cloth ratio of between 0.5 and 0.6 M^3/min per M^2, pressure drops between 1.5 and 2.2 kPa and temperature between 177 and 243°C.

Particulate emission test results of these fabric filter controlled batteries are shown in Table 9.8.1-6.[17,18,19,20,21] The compliance tests on battery B show a higher average emissions due partly to a lower coal-feed rate and capacity during the tests because 12 ovens were out of service. The higher emissions reported at this battery during the EPA test may have been due to poor cleaning of the bags as evidenced by the small change in pressure drop of less than 0.3 kPa after completion of each cleaning cycle. Opacity data on all filters showed a maximum 6-minute average opacity of 5 percent.

Door Leaks--The oven doors on both ends of each oven can account for a large percentage of visible coke oven emissions.[22] The volatilization of the coal results in a positive oven pressure that will push emissions through improperly sealed doors and door jambs into the atmosphere. One study concluded that door jamb warpage was the most serious problem.[23] This study recommended that door jambs should be as close to square or rectangular as possible, with a low moment of inertia and not excessively stiff, so that internal stresses will not cause warpage of the jamb when heated. It was

TABLE 9.8.1-6. SUMMARY OF TEST RESULTS ON FABRIC FILTERS AT KAISER STEEL[17,18,19,20,21]

	EPA test		Compliance tests[a]			
	B[17]		B[18]	C[19]	D[20]	E[21]
	Inlet	Outlet	Outlet	Outlet	Outlet	Outlet
Test period	Sept. 79		July 79	Mar. 79	Nov. 78	Feb. 79
Battery Capacity (Mg)		420	420	572	572	572
Particulate concentration, g/dNm^3	0.2481	0.0625	0.0215	0.0135	0.0208	0.0025
	0.1626	0.0788	0.0272	0.0128	0.0229	0.0014
	0.1233	0.0323	--	0.0108	0.0176	0.0030
Average	0.1780	0.0579	0.0244	0.0124	0.0204	0.0023
Flue gas flow, dNm^3/min	1,000	1,033	978	1,044	994	1,439
	999	1,043	1,123	1,052	982	1,389
	1,023	1,123	--	1,056	1,031	1,314
Average	1,007	1,033	1,051	1,051	1,002	1,381
Average flue gas flow per unit of capacity (Nm^3/hr per Mg)		148	150	110	105	145
Particulate emissions (kg/hr)	14.89	3.87	1.27	0.844	1.24	0.22
	9.75	4.94	1.83	0.807	1.35	0.12
	7.57	1.98	--	0.676	1.09	0.23
Average	10.74	3.60	1.55	0.776	1.23	0.19
Particle emission rate, g/Mg of coal		157	79.9	27.4	37.2	7.2
		80	115.1	27	40.5	3.9
		200	--	22.7	35.6	7.1
Average		146	97.5	25.7	37.8	6.1
Particulate emission rate, g/Mg of coal		9.21	3.02	1.48	2.17	0.22
		11.76	4.36	1.41	2.36	0.12
		4.71	--	1.18	1.91	0.23
Average		8.56	3.69	1.36	2.15	0.33
Filter total pressure drop (cm H_2O)		21.6	16.4	14.4	NA	21.3
		19.6	17.7	14.4	NA	20.7
		21.1	--	15.8	NA	19.7
Average		20.8	17.1	14.9		20.6

[a]All batteries were fired with COG during the tests, except for battery E which was fired with BFG.

determined that gray cast iron is not a satisfactory jamb material; ferritic ductile iron was recommended as a suitable material. The study concluded that upgraded metal seals have the best potential for meeting all of the emission control and retrofit criteria. A spring type seal, with no point loading, made from material that can withstand temperatures as high as 427°C is best for the construction of effective seals. CF&I Steel Corporation replaced 316 stainless steel door sealing edges with an edge fabricated from "NiCuti" material which proved superior for resisting damage and for ease of repair.[24] A buildup of carbon between the door and oven can interfere with door seals, and a systematic program to remove this material is recommended. Data gathered by the U.S. EPA at coke oven batteries with aggressive operation and maintenance programs to control door emissions indicate that emissions from as few as 12 percent of the doors is achievable on a continuous basis.[2] Short batteries with superlative control have achieved emissions from an average of as few as 4 percent of the doors, whereas tall batteries have achieved emissions from an average of as few as 7 percent of the doors.[2]

Pushing--The quantity of emissions from coke pushing is highly variable. Particulate emissions include coke entrained in the strong thermal current of air that rises above the hot coke and the products of incomplete combustion of the volatile residues in the coke. Coke that has not been completely carbonized (with a high percentage of residual volatile constituents) is called "green" coke. All coke may have some residual volatile constituents, although poor operation and maintenance can result in much larger quantities. As stated previously, in Section 9.8.1.1.1, pushing emissions from "green" coke are greater than from coke that has less volatile constituents remaining.

Three primary operating variables affect the greenness of the coke and, hence, the quantity of emissions. The variables are: heating rate (or temperature of the oven), coking time (from when the coal is charged to when the coke is pushed) and heat distribution within the oven. The first two are interrelated. Within some range, the time required for the distillation of volatiles to near completion is inversely related to the fourth power of the inner wall temperature.[2]

The necessary time and heating rate are affected by the oven design and type of coal charged. In general, these are operating parameters that can be adjusted to achieve good coking. If not sufficient, coking time can be extended or the heating rate of the battery can be raised to reduce emissions. There is, however,

an upper temperature limit above which the refractory in the ovens may be damaged.

The third variable, heat distribution in the oven, affects the greenness of the coke as follows: if sufficient heat does not reach all portions of the coal charged to the oven, there will be pockets or areas of green coke when it is pushed, hence more emissions.

Causes of insufficient heat to portions of an oven include non-homogeneity of the coal blend charged to the oven, its moisture content and bulk density. Specifically, a pocket of coal with a high moisture content can cause the temperature in that area to rise more slowly than in the rest of the oven. As a result, when the remainder of the coal has completed coking and the coke is pushed, that pocket of coke is still green.

A more significant cause of poor distribution is inadequate adjustment or maintenance of the heating system. For example, a faulty gas nozzle or a blocked passage in the system of heating flues can reduce the heat reaching a section of an oven. Flues may break or become clogged with debris from spalling or cracking of the refractory. Blocked flues are particularly a problem near the ends of an oven where the periodic removal and replacement of oven doors creates greater temperature changes which cause deterioration of the oven refractory.

Table 9.8.1-7 presents available data on the quantity of uncontrolled emissions from the pushing operation.[25-38] The data are presented in three categories: fine, coarse and fugitive. This breakdown corresponds to the manner in which the data were collected. Since uncontrolled pushing emissions are not confined to a stack (which presents extreme sampling problems), measurements have been performed at plants where the emissions are captured and exhausted through a duct. Some estimates have been made of the emissions that escape capture; hence, the distinction on Table 9.8.1-7 between the "fugitive" and other categories. A distinction between "fine" and "coarse" is made when the emissions measured were captured by a shed. A shed segregates the small and large particles by entraining only the small particles in the exhaust gas stream and allowing the large particles to settle under the shed.

Considerable variation in the data can be seen in Table 9.8.1-7. The variation in the "fine" column probably reflects, among other factors, the

TABLE 9.8.1-7. DATA ON UNCONTROLLED PARTICULATE EMISSIONS FROM PUSHING[25-38]

Test	Reference	Plant	Test by	Uncontrolled particulate emissions, grams/kilogram of coke produced (pounds/ton of coke produced)[a,b,c] Fine	Coarse	Fugitive	Total	Number of samples[d]	Number of pushes sampled[d]	Comments
1a	25	L	EPA Contractor	0.14 (0.28)	0.8 (1.6)	0.03 (0.05)	1.0 (1.9)	3	36	
1b	25	L	EPA Contractor	0.42 (0.83)				1	5	The sample was collected when the pushes were much greener than during collection of the 3 samples above.
2	26	L	Plant Contractor	0.13 (0.25)				5	5	
3a	27	L	Plant	0.22 (0.44) 0.26 (0.52) 0.43 (0.85)				3 7 5	about 18 about 42 about 30	The average greeness of the pushes sampled increased in the order the values are listed.
3b	27	L	Plant	0.34 (0.68)				30	about 180	Includes the 15 samples listed for Test 3a
4	28	L	Plant		0.7 (1.4)					
5	29	T	EPA Contractor	0.39 (0.78)	0.32 (0.64)	0.10 (0.19)	0.8 (1.6)	3	60	
6	30,31	T	Plant	0.24 (0.48)				2	16 - 24	
7	30,31	T	Plant	0.40 (0.80)				7	56 - 84	
8	30,31	T	Plant	0.31 (0.62)				2	16 - 24	
9	30,31	T	Plant		0.34 (0.68)					
10	32	T	Plant	0.38 (0.76)				23	184 - 230	
11	33,34,35	P	Plant Contractor	0.23 (0.46)	2 (4)			2	not known	The plant was operating on extended coking times.
12	36	K	Plant Contractor	0.76 (1.5)		0.44 - 1.2 (0.88 - 2.4)	1.2 - 2.0 (2.4 - 3.9)	9	168	The two values in the "fugitive" column were obtained by two different estimation techniques.
13	37,38	V	Plant	0.25 (0.50)				3	48	

[a]Multiply the values in this column by 0.7 to convert to a denominator of weight of coal charged.
[b]For tests 1 through 11, the values in the "fine" column are for measurements in the exhaust duct from a shed. Those in the "coarse" column are estimates based on measurements of dustfall under the sheds. Those in the "fugitive" column are estimates based on rough measurements of the particulate concentration, size, velocity, etc., of unconfined plumes. For tests 12 and 13, the values in the "fine-coarse" column are for measurements in the exhaust duct from a hood. The entry in the "fugitive" column was estimated as for the other tests.
[c]The values for tests 2, 3, 5, 6, 7, 8 and 10 include emissions from oven door leaks during the 1 to 3 minutes-per-push sampling time. Door emissions are mixed with pushing emissions in the exhaust duct from the sheds tested. The door emissions should be less than 5 percent of the values shown (based on measurements of these emissions during tests 1 and 5).
[d]The number of samples and pushes sampled refer only to the data in the "fine" column.

greenness of the coke pushed. Due to this variation, the data are best viewed in terms of ranges of the data.

The California Air Resources Board has identified three feasible methods presently being used in this country for controlling coke pushing emissions.[22] These methods involve the use of a "one-spot (or enclosed) quench car," the installation of a "full-length shed" over the coke exit side of the oven, and "traveling hoods." The one-spot quench car provides exhaust gas hooding during the pushing of the coke from the oven into the car. The collected gases and particulate matter are drawn from the enclosure into an exhaust gas cleaning car which employs a scrubber for particulate removal. The full-length shed collects and contains the emissions generated from the pushing operation while the air is drawn from the shed into a particulate control device. The traveling hood involves the use of a mobile hood (attached to the quench car or coke guide) which is connected to an overhead exhaust main that feeds the collected gases and particulate matter into control equipment. The emissions generated from pushing green coke are capable of overloading most control systems. Thus, it is critical that the coal be properly coked to preclude the handling of green coke.

Captured particulate emissions and their size distribution from a coke pushing operation controlled with a traveling hood system are shown in Table 9.8.1-8.[35] The average hood capture efficiency was estimated to be 41 percent based on measured dust concentrations above the hood. An engineer observer's estimate of the hood capture efficiency for these pushes was 66 percent. The coke being pushed was estimated to be moderately green by a panel of independent, non-biased evaluators.

One source reports that it is feasible to use fabric filters to reduce emissions captured with full-length shed and traveling hood control systems.[6] The condensed tars that reach the filter material can cause blinding or plugging of the bags unless the ratio of solid particulate to tar is 20 to 1 or greater. At these ratios the particulate matter will become sufficiently mixed with the tar in the duct leading to the filter, thus preventing the tar from coming in direct contact with the filter material. Where particulate to tar ratios are less than 20 to 1 (which is the case with most domestic coking

Table 9.8.1-8. PARTICULATE EMISSIONS AND SIZE DISTRIBUTION FROM COKE PUSHING[35]

Emission classification	Mass emissions, kg/Mg (mass percent less than stated size)					
	Total	10.1 μm	7.25 μm	5 μm	2.5 μm	1 μm
Fugitive	0.85[a]/0.315[b]	---	---	---	---	---
Ducted (prior to control)	0.56	0.084 (15)	0.0644 (11.5)	0.0504 (9)	0.028 (5)	0.011 (2)
Ducted (after control device[c])	0.0036	0.0034 (87)	0.0032 (82)	0.003 (76)	0.0023 (60)	0.0014 (36)

[a]Determined using hood capture efficiencies estimated from dust concentration above hood.
[b]Determined using hood capture efficiencies estimated by an engineer observer.
[c]Control device was a 15 kPa venturi scrubber.

operations), the bag material must be protected by either a continuous injection or a batch precoat of solid material. Materials considered for such use are coal, limestone, coke breeze, and flyash. Table 9.8.1-8 provides information relating to these materials and their uses. Fabric filters employing a precoating system have been in use at a coke plant in Japan since 1976, with no significant operating problems reported.[6]

Quenching--The control of quench-tower particulate emissions is accomplished by the use of baffles. Baffles are used primarily as mist eliminators and are designed to intercept particulate matter and water droplets carried in the quench tower vapor updraft. It has been reported that particulate removal for baffles ranges from 50 to 95 percent, depending on the baffle type used.[9] It is also reported that the use of dirty quench water can result in emissions 1.5 to 3 times greater than if clean water is used. Using a mathematical model, one source developed a strategy for reducing particulate matter emissions that employed the following techniques:[39]

- Increase baffle angle
- Increase liquid particle growth by addition of cooling water
- Increase gas velocity

Dry Coal Charging--If the dry coal charging process is used, the gas used to preheat the coal should be cleaned before exhausting it to the atmosphere. Low-energy scrubbers and dry electrostatic precipitators have been used to control the preheater stack emissions.[5] The results from only one comprehensive preheater stack test are available; Figure 9.8.1-6 presents scrubber collection efficiency as a function of coal feedrate and operation temperature.

9.8.1.2 Sintering

9.8.1.2.1 Process description. Fine iron-ore particulate matter, whether in natural or in concentrated ores, must be agglomerated to a size and strength suitable for blast-furnace charging. Sintering is used to convert iron ore fines and other iron-containing dusts into a product more suitable for this purpose. The sintering process converts materials such as fine ore concentrations, blast-furnace flue dust, mill scale, turnings, coke fines, limestones fines, and miscellaneous fines into an agglomerated product that is suitable for blast-furnace feed material. This is done by depositing

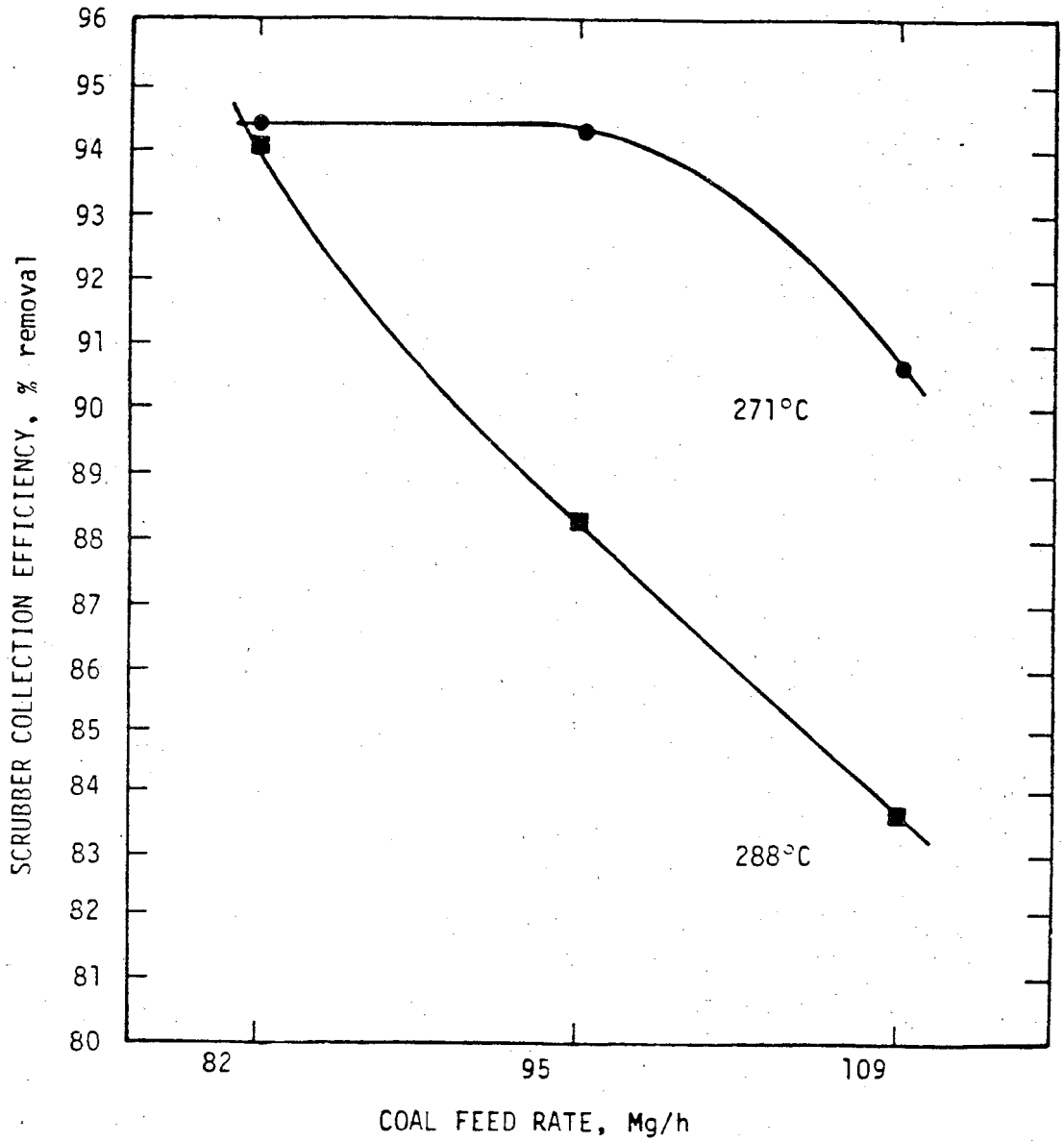

Figure 9.8.1-6 Scrubber efficiency vs. coal feedrate particulate data.[5]

the mixture on a sinter machine traveling grate through which combustion air is drawn into a windbox. The mixture is ignited by natural gas or fuel oil and burns to form a fused mass which is fed to a cooler, crushed, and then screened in preparation for charging into a blast furnace.[40] Average stack emission parameters for sintering are presented in Table 9.8.1-9.[41] Nationwide particulate emissions from sintering were estimated to be 95 Gg per year in 1977.[42]

9.8.1.2.2 Emission characteristics and applicable control technology. The sintering process can be a significant source of particulate emissions. Uncontrolled particulate emissions from the sinter machine windbox are about 10 g/Kg of sinter produced.[43] Particle size analysis conducted at the inlet of a cyclone at one sinter plant indicated that about 13 percent of the particulate was smaller than 10 μm. A summary of the particle size analysis is shown in Figure 9.8.1-7.[44,45,46] The particle concentration for this uncontrolled emission stream was 2 g/Nm^3 (1 gr/scf) or 3 g/kg (7 lb/ton) strand feed.[46] Because the size of particulate from the sinter plant windbox is of predominantly larger diameter, mechanical collectors are typically used for product recovery and to reduce dust loads for the more efficient secondary collectors. Secondary collectors which have been used to control sinter plant emissions include wet and dry electrostatic precipitators, fabric filters, scrubbers and gravel bed filters.

Dry Electrostatic Precipitators--The addition of dry ESPs downstream of existing mechanical collectors reportedly increased overall dust removal efficiencies to over 97 percent.[47] This is based on efficiencies reported to the National Emission Data Systems by several sinter plants for control systems using a mechanical collector as a primary control device and a dry ESP as a secondary control device.

However, modern tendencies toward superfluxing have changed the basicity of the sinter which changes the electrical properties of the particulates, causing them to have a higher resistivity. Basicity, or base-to-acid ratio, is normally defined in the sintering industry as the ratio of the "base" components in the feed (CaO and MgO) to the "acid" components in the feed (SiO_2 and Al_2O_3). The acid components are naturally present in iron ores while most of the base components are added in the form of limestone

Table 9.8.1-9. STACK PARAMETERS FOR SINTERING OPERATIONS[41]

Facility or operation	Nationwide number of facilities or operations	Average stack ht., m	Average stack diam., m	Average temp., °C	Average flow, (Am^3/min)	Average operating rate per facility or operation (Gg of sinter produced per yr)
Sinter machine operation	71	41	3	117	6900	790

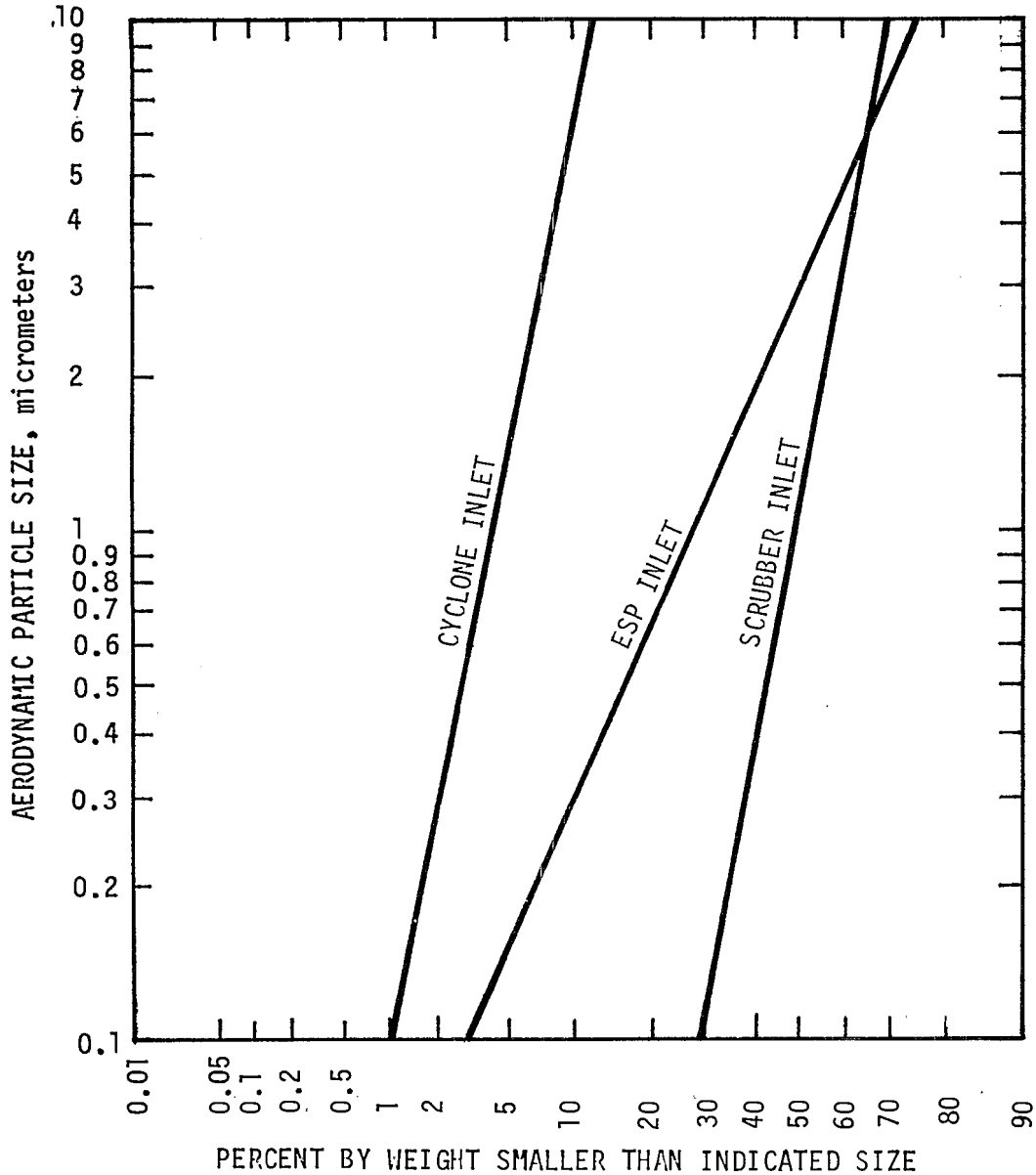

Figure 9.8.1-7. Particle sizing from inlets of windbox secondary control devices.[44 45 46]

and/or dolomite. In general, the efficiency of an ESP decreases as the basicity of the sinter increases. It is difficult to predict the resistivity of an individual sinter plant's particulate emissions. Some limited data have been reported as follows:[48]

Parameter	Sinter Sample No. 1	Sinter Sample No. 2
Percent fluxing material by weight	9	35
Resistivity of dust 225°F and 6% moisture, ohm-cm	1.5×10^9	5×10^{13}
Approximate basicity	1.0	3.5

Excessive sparking can occur when the dust reaches a resistivity of about 2×10^{10} ohm-cm. When resistivity exceeds about 10^{11} ohm-cm, it becomes very difficult to attain reasonable efficiencies.

Therefore, as a sinter plant moves toward making a superfluxed sinter (basicity greater than 1.5), the resistivity of the windbox dust becomes too high to maintain good ESP performance.

Resistivity is also affected by gas moisture content, various constituents in the ores, and temperature. In general, however, the effects of superfluxing far overshadow these other factors. The uncertainty regarding this resistivity of the dust to be collected has resulted in the reluctance of ESP manufacturers to state the efficiency of equipment proposed for sinter plants. Changing from a normal sinter to a superfluxed sinter has reportedly resulted in overall loss of ESP efficiencies in the range of 30 percent.

Average design performance parameters are shown in Table 9.8.1-10. The

TABLE 9.8.1-10. AVERAGE DRY ESP DESIGN PERFORMANCE PARAMETERS FOR COLLECTING SINTER MACHINE WINDBOX EXHAUST EMISSIONS[49]

Gas velocity	1.3 m/s (4.3 fps)
Inlet gas temperature	118°C (245°F)
Electric field	3.2 kV/cm (8.1 kV/in)
Inlet dust loading	2.3 g/m^3 (1.0 gr/acf)
Precipitator power	28 watts/m^3/m (71 watts/1000 cfm)

size of the ESP is based on the collection efficiency desired, gas volume, and the precipitation rate parameter. The latter is dependent on the resistivity of the dust.

EPA-contracted emissions tests have been conducted at one dry ESP controlled sinter plant. This plant has four traveling-grate strands with a total production capacity of 5440 Mg/day (6000 ton/day). Windbox exhausts are controlled by multiclones at each strand followed by two ESPs. Each ESP controls two strands. Tests were conducted on only one ESP. Outlet concentrations for three samples taken by EPA Method 5 were 0.097, 0.046 and 0.064 g/Nm^3 (0.042, 0.020 and 0.028 gr/scf), for a combined average of 0.069 g/Nm^3 (0.030 gr/scf) or 0.1 g/kg (0.19 lb/ton) strand feed.[44] The average total particulate load entering the precipitator was 0.069 g/Nm^3 (0.30 gr/scf) or 0.83 g/kg (1.66 lb/ton) strand feed. The efficiency of the control device was calculated using the average of samples of the inlet and outlet which were sampled concurrently. The average efficiency was 91.2 percent for the ESP at this plant.

Opacity readings of the windbox exhaust stack were taken during two of the three particulate tests on the ESP outlet. The 6-minute averages ranged from 0 to 20 percent.

The process was operating normally during all tests. Sinter basicity during the tests ranged from 1.2 to 1.6. This is within the range normally produced at the facility. The control system was also fully operational during the tests.

Results of inlet particle size analysis after cyclone control for this plant are summarized in Figure 9.8.1-7. The results of particle size analysis after the ESP are summarized in Figure 9.8.1-8.[44,45,50]

Wet Electrostatic Precipitators--Wet electrostatic precipitators (ESPs) have been demonstrated as capable of controlling windbox exhaust emissions. A continuous water washing of the plates prevents an insulating layer of pollutants from forming and nullifies the effect of the increased resistivity of the particles caused by superfluxing the sinter.[51] The gas stream is kept saturated by continuous sprays and, as the particles and liquid droplets collect on the plates, a film is formed which continuously drips off and carries with it the collected dust, thereby preventing any buildup.[52] The

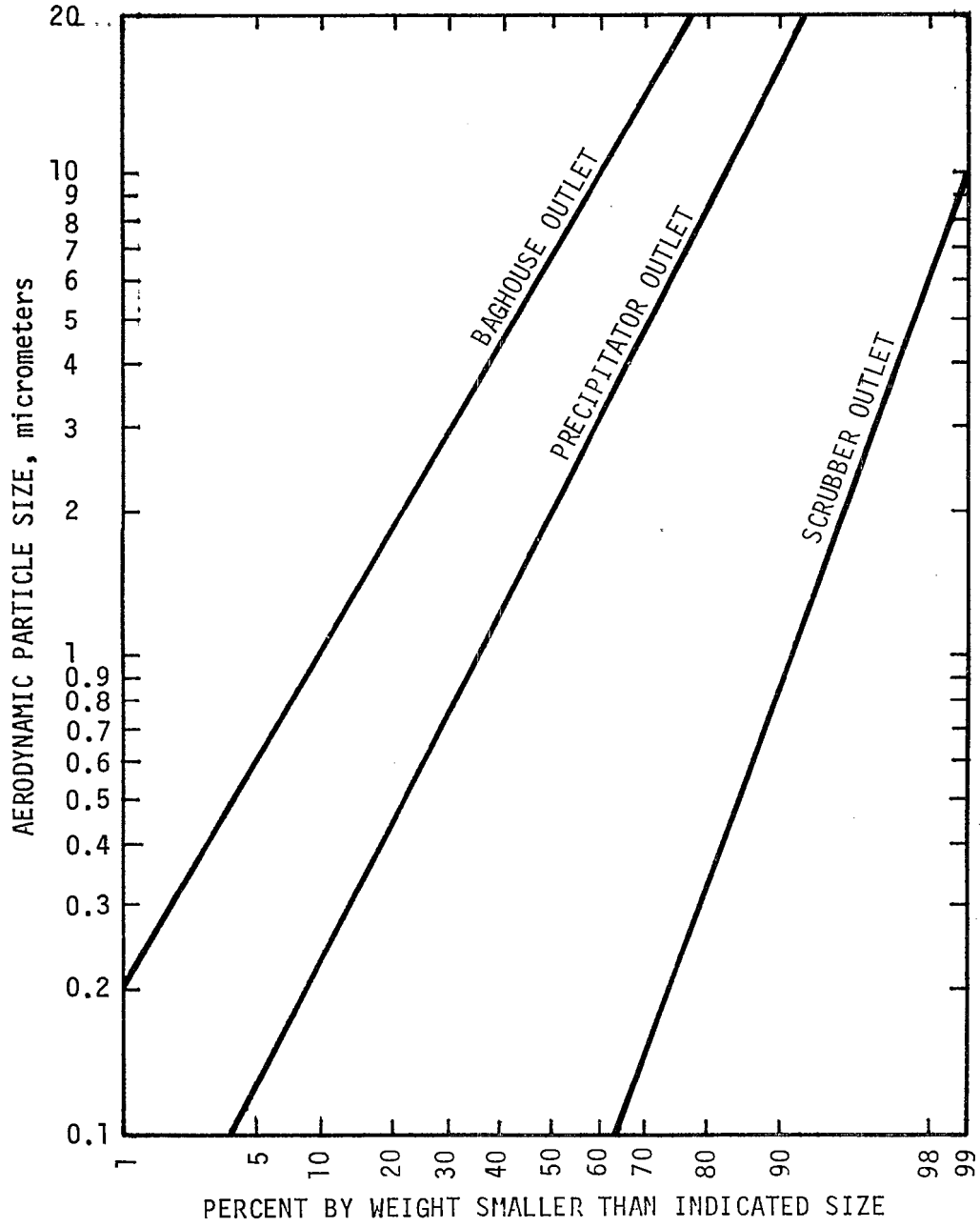

9.8.1-8. Particle sizing from windbox secondary control outlets of sampled facilities.[44 45 50]

approximate water requirement for this system for present application is 0.67 - 1.2 L/m^3 (5 to 9 gal/1000 scf).[53] This requirement is comparable to water usage for the high energy scrubbers applied to sinter plants.

The water sprays reduce the temperature of the inlet gases to 38 - 49°C (100 - 120°F); therefore, the condensable hydrocarbon portion of the total particulate emission is available for collection. Some hydrocarbons condense into a fine mist and are collected on the plates. Because of their small size and low dielectric constant, these hydrocarbon particles are not removed as efficiently as dust particles with dielectric constants greater than 10.

A typical pressure drop across a wet ESP is approximately 0.13 kPa (0.5 inches w.g.).[51]

As with other control devices, a wet ESP must be properly designed. A wet ESP installed on a Canadian sinter plant was unsuccessful because the inlet grain loadings were too high and the acidity of the recycled liquor caused corrosion problems.[53] The maximum inlet loading for proper operation should be 0.57 g/Nm^3 (0.25 gr/scf) which could be achieved by installing a primary mechanical collector upstream.[52] Also, the pH of the recycled water should be monitored and a caustic solution injected to neutralize any acidity.

Wet electrostatic precipitators have reported solid particulate removal efficiencies in excess of 99.5 percent.[51] One pilot test of a wet ESP in series with a saturator (for cooling the gas stream) shows an overall efficiency of 95.7 percent for the removal of solid particulate.[54]

A full size module has been operated since July 1976 at one plant.[55] The module handles 1370 Nm^3/min (50,000 scfm) or about one-half the windbox exhaust from a single sinter machine. After six months of continuous operation, the company concluded that the technical feasibility of operating the wet ESP had been demonstrated. Performance tests were conducted during four different conditions of process operation. The baseline conditions during 38 emission tests were full gas flow [1360 Nm^3/min (49,600 dscfm)] through the wet ESP and production of low basicity (0.85) sinter. Filterable particulate emissions ranged from 0.007 to 0.05 g/Nm^3 (0.003 to 0.22 gr/dscf) with average emission of 0.023 g/Nm^3 (0.010 gr/dscf). The sinter machine produced 50,000 kg (55 tons) of sinter per hour with a total burden rate of

94,000 kg (104 tons) per hour. Average filterable particulate emissions were 0.045 g/kg (0.09 lb/ton) of strand feed. The wet ESP was operated with a gas flow rate of only 600 Nm^3/min (22,000 dscfm) for three tests. Average filterable particulate emissions dropped to only 0.009 g/Nm^3 (0.004 gr/scf) or 0.035 g/kg (0.07 lb/ton) of strand feed. A high basicity sinter (1.5) was produced during ten tests with the wet ESP operating at 1200 Nm^3/min (43,000 dscfm). Filterable particulate emissions ranged from 0.018 to 0.04 g/Nm^3 (0.008 to 0.018 gr/dscf); the average was 0.03 g/Nm^3 (0.014 gr/dscf). Sinter production averaged 48,000 kg/hr (53 tons/hr) during these tests; therefore, emissions averaged 0.06 g/kg (0.12 lb/ton) of strand feed. The reason for increased emissions with higher basicity sinter is not clear.

Baghouses--At least two sinter plants have successfully used baghouses to control windbox emissions. The baghouses were selected rather than ESPs because of the high resistivity of the sinter dust.

At other sintering facilities where baghouses have been considered as a possible windbox control, there has been a reluctance to adopt fabric filters. The reluctance is based on the concern that fabric filters would experience abnormally high bag replacement rates and other problems due to the condensation of moisture and condensible hydrocarbons on the bags. In order to minimize bag condensation problems it is necessary to: (1) insulate the baghouse and ductwork to limit the exhaust temperature drop to less than 10°C (50°F) under all ambient conditions, and (2) keep the oil content of the exhaust gases low.[56] This can be accomplished by careful selection of burden materials, pretreatment of some materials or recirculation of the exhaust gas.

Also, the oil content of the particulates captured must be kept low to minimize heat buildup in the hoppers. Oil captured with the dust in the baghouse hoppers can cause chemical reactions which create excessive temperatures.[57] These high temperatures can cause partial sintering of the collected materials and bridging can occur across the hopper outlet to prevent the catch from being removed.[57]

Bag failures due to the abrasive nature of the dust or the possibility of sparks igniting bags can be minimized by proper selection of bag material. Adjacent bags can be damaged as the broken bags whip around. This problem

can be minimized if damaged bags are repaired as quickly as possible or if the baghouse is designed with greater distance between the bags.

The operating parameters for the two sinter plants at which baghouses have been used successfully to control windbox emissions are shown in Table 9.8.1-11.[58,59] Major considerations for baghouse design are the physical properties and quantity of the particulates, and the temperature and volume of the windbox exhaust.

Baghouses have the advantages of low energy requirements and low pressure drop (i.e., 3.75 kPa (15 inches w.g.)]. Their efficiency is not affected by the resistivity of the particulate, and no water pollution problems are created.

A particulate removal efficiency of 99.9 percent was reported[56] by one plant for its baghouse which controls windbox emissions. The baghouse manufacturer guaranteed a minimum of 99 percent by weight particulate efficiency during normal operation. Source tests conducted by the local county air pollution control office showed the filterable particulate concentration to be 23 mg/Nm^3 (0.01 gr/scf). An EPA-contracted source test at this plant using EPA Method 5 on the baghouse outlet shows an average concentration of 97 mg/Nm^3 (0.042 gr/dscf) which is much higher than would be expected unless some bags were leaking.[60] Particle size results show over 20 percent of the particulate was greater than 10 microns in diameter (see Figure 9.8.1-8). However, this plant had low stack opacities during source testing. The 6-minute opacity averages during the third test for particulates ranged from 0 to 1.8 percent. There were no opacity readings for the windbox stack during the other two particulate tests because of overcast conditions.

This plant has two independent sinter strands with separate control systems. Total plant production is normally 2720 Mg/day (3000 ton/day). Only one sinter machine was tested. Windbox emissions are controlled by four cyclones in parallel followed by a baghouse. The hood over the discharge end of the strand and breaker extends back over the last windboxes so emissions are drawn down into the windbox. Baghouse outlet concentrations were 69, 108, and 115 for an average of 97 mg/Nm^3 (0.042 gr/dscf) or 160 mg/Kg (0.32 lb/ton) strand feed. Control efficiencies could not be determined since samples were not taken of the inlet to the baghouse. The process and

TABLE 9.8.1-11. BAGHOUSE OPERATING PARAMETERS FOR COLLECTING SINTER MACHINE WINDBOX EXHAUST EMISSIONS[58,59]

Parameter	Plant A	Plant B
Net air-to-cloth ratio	0.45 m/min (1.47 fpm)	0.41 m/min (1.36 fpm)
Gas volume	10194-11327 m^3/mm (360,000-400,000 cfm)	12459 m^3/min (440,000 cfm)
Moisture	6-10% by volume	6%
Particulate	0.7-1.1 g/Nm^3 (0.3-0.5 gr/scf)	--
Gaseous sulfur	500 ppm	--
Pressure drop	3.25-3.5 kPa (13-14 inches w.g.)	--

control equipment were operating normally during the test series. Sinter basicities during the test week ranged from 1.9 to 2.1.

A baghouse was installed at another plant in September 1975 to control windbox emissions.[61] The single strand normally produces 3265 Mg/day (3600 tons/day). The windbox exhaust passes through multiclones and an ESP with combined collection efficiencies of 85 percent prior to entering the baghouse. Compliance tests run in February 1976 showed the average filterable particulate concentration was 23 mg/Nm^3 (0.01 gr/dscf). Mill scale is not sintered at either of these plants and blast furnace flue dust is limited to ten percent or less of the burden to avoid problems with condensable hydrocarbons.

Scrubbers--Scrubbers have not been used frequently in the past due to high energy requirements and problems associated with corrosion. Modern sinter plants, however, are installing wet scrubbing systems for the windbox exhausts, since the potential advantages of high collection efficiencies for total particulates (solids and condensable hydrocarbons) appear to outweigh operating problems.

Of all the devices used to control the windbox exhaust emissions, high energy scrubbers require the greatest energy input. To effectively remove total particulates, a pressure drop of 10 kPa (40 inches w.g.) or greater is required.[62] This necessitates the addition of more powerful fan motors to overcome the added resistance of the system. Average scrubber design performance parameters are shown in Table 9.8.1-12.[63]

The corrosive nature of the scrubber liquid and the high abrasiveness of the particulate matter requires the use of special materials. Water treatment with lime or soda ash is also necessary if the effluent is to be recycled. Untreated scrubber liquor may typically contain up to 1600 ppm chlorides and up to 520 ppm total sulfur and have a pH of 2.1 to 3.1.[62,64] The low pH is caused mainly by the absorbed exhaust gases. Absorbed sulfur dioxide, fluorides, chlorides, carbon dioxide, carbon monoxide, and even oxides of nitrogen can react with water to form acids which result in the low pH found in untreated scrubber effluent.

Because of the low pH, the effluent stream must be treated. In most

TABLE 9.8.1-12. AVERAGE SCRUBBER DESIGN PERFORMANCE PARAMETERS FOR COLLECTING SINTER MACHINE WINDBOX EXHAUST EMISSIONS[63]

Liquid-to-gas ratio (L/G)	1.2 L/M^3 (9 gal/1000 acf)
Pressure drop	11.25 kPa (45 inches water gauge)
Liquid recycle ratio	0.95
Throat velocity	137 m/sec (450 ft/sec)

cases, water treatment facilities exist for treatment of other process effluents associated with steel-making processes. A typical recycle ratio for a scrubber system installed on a sinter plant is 0.95 with scrubber bleed ranging up to 1900 lpm (500 gpm).

Unlike dry ESPs, scrubbers are not affected by the resistivity of the particulate collected. In fact, sinters with a higher basicity will tend to minimize corrosion problems. Re-entrainment of captured particulate in the air is also not a problem since it is handled as a sludge. Scrubbers cool the exhaust gases and condense hydrocarbons which would pass through other types of dry collectors in vapor form.

Emission tests have been conducted at another plant that has one traveling-grate sinter strand with a normal production of 2600 Mg/day (2880 ton/day). Windbox emissions are controlled by four cyclones in parallel followed by a single venturi scrubber. The total particulate outlet data for the first test was 76 mg/Nm^3 (0.033 gr/dscf) or 80 mg/kg (0.16 lb/ton) strand feed. Subsequent to this test, the scrubber was modified to achieve an increase in pressure drop across the venturi to approximately 13 kPa. Total particulate concentrations for the next three tests were 71, 53 and 62 for a combined average of 62 mg/Nm^3 (0.027 gr/dscf) or 90 mg/kg (0.18 lb/ton) strand feed.[65] The inlet emission rate was 1.1 g/kg (2.2 lb/ton) strand feed.

Two newer sinter plants have been equipped with recirculating water scrubbers for controlling windbox particulates.[66,67] Preliminary tests at one of these plants showed filterable particulates averaged 62 mg/Nm^3 (0.27 gr/dscf) or about 100 mg/kg (0.2 lb/ton) strand feed. Filterable particulates were 44 mg/Nm^3 (0.019 gr/dscf) at the other plant and 50 mg/kg (0.1 lb/ton) of strand feed.

Typical scrubber guarantees are for an outlet dust loading of 46 mg/Nm^3 (0.02 gr/scf) when based on the dry catch. One vendor reported that a scrubber guarantee of 92 mg/Nm^3 (0.04 gr/scf) could possibly be given when both solids and condensable hydrocarbons are considered.[68]

Gravel Bed Filters--Gravel bed filters have been used to clean windbox exhaust, also. The filtration media consists of several layers of sized grit.

As the gas flows through the layers the impingement action causes the particles to agglomerate and be caught on the grit and in the spaces in the media. The filter is cleaned by backflushing with clean air while raking the media. The clean air is heated to avoid condensation of moisture which could cause problems with the media. Precautions must also be taken to avoid condensing hydrocarbons which could coat the media and plug the voids.

9.8.1.2.3 Sinter processing equipment control systems. Baghouse installations can capture over 99 percent of the particulate collected by the equipment exhaust hoods. Baghouse vendors usually guarantee 99 percent efficiency for their equipment under normal operating conditions and with proper maintenance programs.

In developing emission standards for sinter plants, the U.S. EPA tested a plant which controlled sinter processing operations. At this plant, one baghouse controls emissions from the discharge hoods, breakers, and hot screens for all four strands. The baghouse has two stacks both of which were tested concurrently. The average grain loadings from the outlet of this plant's two baghouse stacks were 0.046 g/Nm^3 (0.02 gr/scf).[44] More than 50 percent of the particulates were over 10 microns in diameter, while less than four percent were under one micron (see Figure 9.8.1-9). These results could have been caused by leakage through damaged bags. The opacity six-minute averages of visible emission readings never exceeded one percent, however.

Baghouses have recently been installed at other plants to control emissions from the discharge hoods, breakers, hot and cold screens, and conveyor transfer points. Average filterable particulate concentrations were 0.01 g/Nm^3 (0.005 gr/dscf) at one plant[69] and 0.02 g/Nm^3 (0.009 gr/dscf) at another plant.[66]

Visible emissions were observed from the discharge hoods, breakers, hot and cold screens, conveyor transfer points and cooler at a number of plants.[70,71,72] Visible emissions averaged less than 10 percent for all such sources observed at these plants.

Emissions averaging 10 percent opacity were observed from the point of loading and discharge from the cooler at one plant, but there were no visible

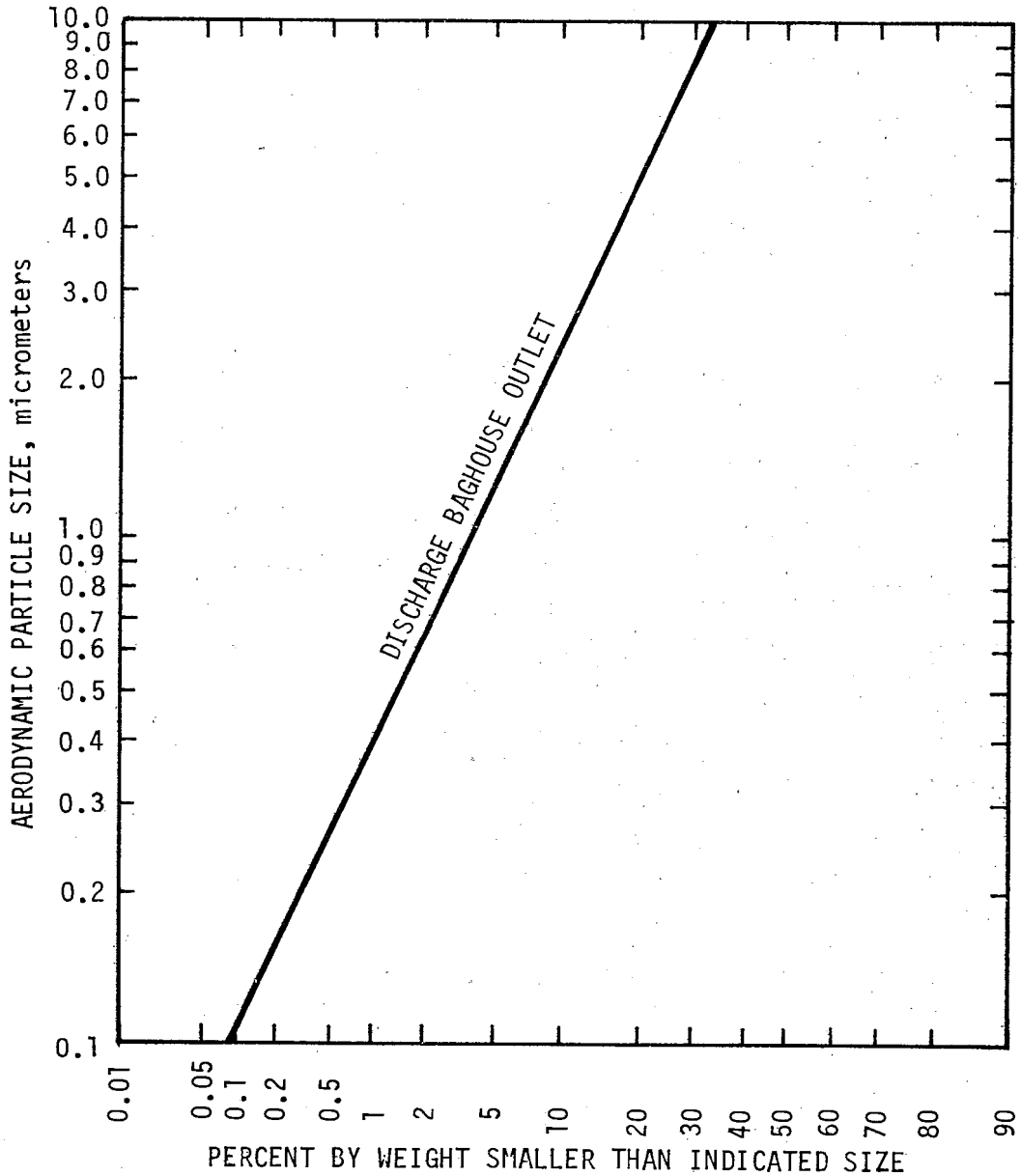

Figure 9.8.1-9. Particle sizing from baghouse outlet controlling sinter processing emissions at a sintering plant.[60]

emissions at a second plant. At a third plant, this point plus the first quarter of the circular cooler were hooded and exhausted to mechanical collectors. This hood could be seen while the discharge hood and hot screens were observed, and no visible emissions were seen. The cooling air exiting the top of the cooler was observed for three hours at the second plant and no visible emissions were seen.

9.8.1.3 Blast Furnace. Pig iron or molten iron for steel-producing furnaces is obtained by the reduction of iron ore, Fe_2O_3 (hematite) or Fe_3O_4 (magnetite), to iron in the blast furnace. The iron ore is contained in the iron ore pellets and in the sinter material. A diagram of a typical blast furnace is shown in Figure 9.8.1-10.[73]

The blast furnace operations are continuous, and the furnace charge consists of alternate layers of iron ore, coke, and limestone. The furnace operates at about 1540°C.

The iron ore descends down the furnace and is reduced and melted by the countercurrent flow of hot reducing gases created by the partial combustion of coke. Hot metal from the furnace is tapped into torpedo cars and weighed on the hot metal track scale. After the metal is transferred to a charging ladle, a crane transports it to the steel-making vessel. Molten slag is removed from the furnace through separate tapping holes which are at a higher elevation than the molten-iron tap hole.[74] Average stack emission parameters for iron production blast furnaces are presented in Table 9.8.1-13. Nationwide particulate emissions from blast furnaces were estimated to be 55 x 10^3 Mg per year in 1977.[42] The particle size distribution of the dust collected from a blast furnace is shown in Table 9.8.1-14. Table 9.8.1-15 presents chemical composition data for dry blast-furnace flue dust.

Particulate emissions from blast furnaces tend to be minimized since a high degree of particulate emission control is necessary to keep the stores (heat exchangers) from plugging. About 83 kg of particulate matter per Mg of product is emitted.[43]

Particulates of molten iron from the blast furnace are also emitted during each tap, and these emissions enter the atmosphere by passing through

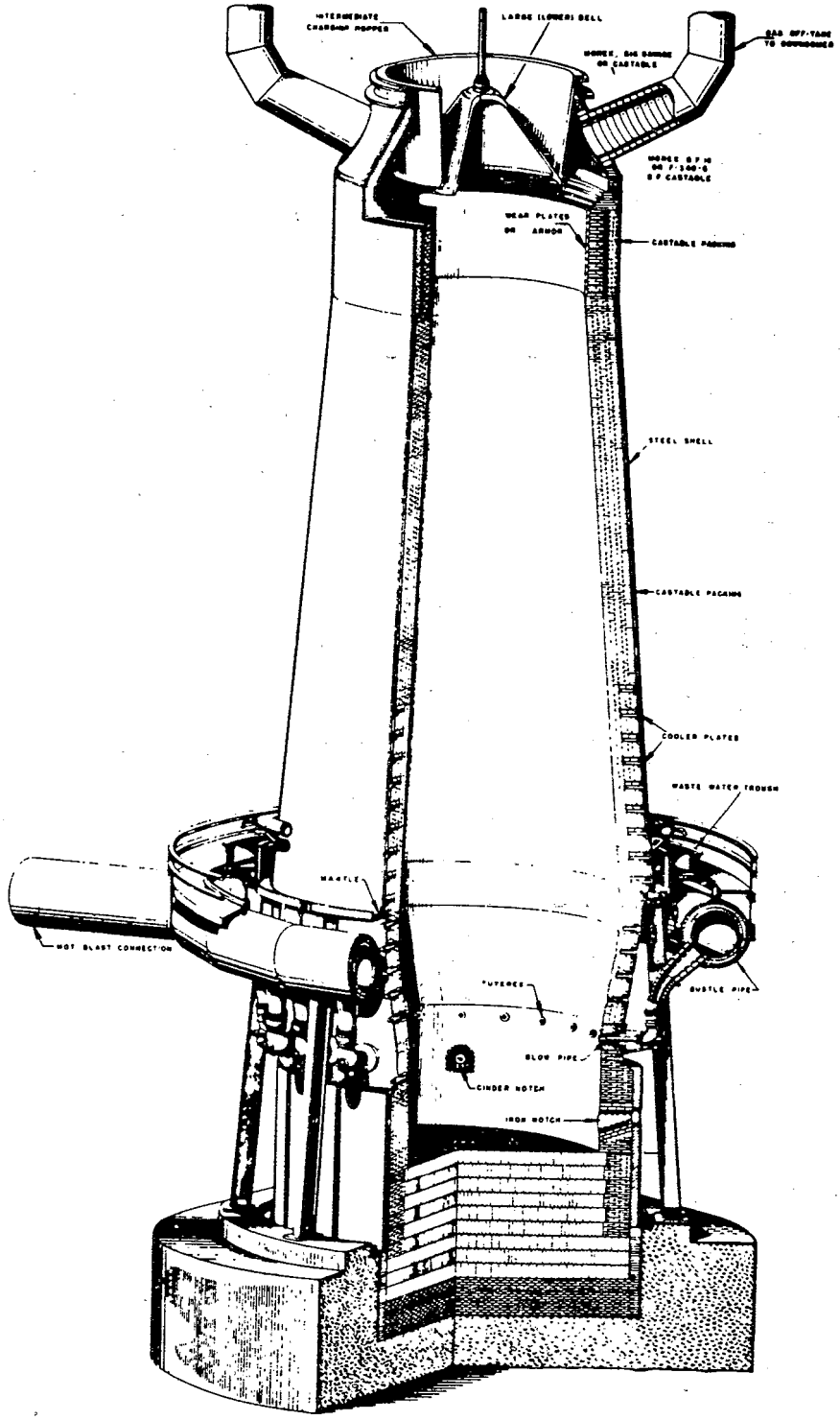

Figure 9.8.1-10. Typical blast furnace.[77]

Table 9.8.1-13. STACK PARAMETERS FOR BLAST FURNACE IRON PRODUCTION OPERATIONS[41]

Facility or operation	Nationwide number of facilities or operations	Average stack ht., m	Average stack diam., m	Average temp., °C	Average flow Am^3/min	Average operating rate per facility or operation (Gg of sinter produced per yr)
Ore charged furnace	70	57	3.3	353	3238	610
Agglomerate charged furnace	68	61	2.5	285	4650	571

Table 9.8.1-14. SIZE ANALYSIS OF FLUE DUST U.S. BLAST FURNACES[a,74]

Size, microns	Range, %
683	2.5 to 20.2
589	3.9 to 10.6
414	7.0 to 11.7
295	10.7 to 12.4
208	10.0 to 15.0
147	10.2 to 16.8
104	7.7 to 12.5
74	5.3 to 8.8

[a]Dust collected in particulate control devices.

Table 9.8.1-15. CHEMICAL COMPOSITION BY DRY, BLAST-FURNACE FLUE DUST[74]

Compound	Weight, %
Iron	3.6.5 to 50.3
Ferrous oxide	Not available
Silicon dioxide	8.9 to 13.4
Aluminium oxide	2.2 to 5.3
Calcium oxide	3.8 to 4.5
Zinc oxide	Not available
Phosphorus	0.1 to 0.2
Sulfur	0.2 to 0.4
Manganese	0.5 to 0.9
Carbon	3.7 to 13.9

the sides and roof of the cast house.

About 6 Mg of gases are evolved for every ton of iron produced from the blast furnace. These flue gases contain dust concentrations of 27.5 g/m^3 and leave the furnace at temperatures of 180 to 280°C.[75] The flow rate of the gases is a function of the coke feed rate. Total gas volume increases linearly with an increase in the coke feed rate.[75]

Various types of control equipment are presently used to control particulate emissions from blast furnaces. Dry cyclones, wet scrubbers, and electrostatic precipitators are common. Venturi scrubbers or electrostatic precipitators are reported to clean blast furnace flue gas to particulate concentrations of 0.23 grams per cubic meter.[74]

The relationship between clean-gas dust loading and pressure drop across a venturi scrubber is shown in Figure 9.8.1-11.[73] As seen from the figure, low output dust loadings can be achieved at higher pressure drops. Venturi scrubbers of fixed- or variable-orifice types can be employed on blast furnaces.

9.8.1.4 Open Hearth Furnace. In the open hearth furnace, steel is produced from a mixture of scrap and hot metal in varying proportions. The feed, consisting of limestone, light and heavy scrap, and (normally) molten pig iron, is charged to the open hearth or reverberatory furnace and heated. Cold pig iron is used when molten pig iron is not available. Impurities such as carbon, manganese, silicon, sulfur, and phosphorous are reduced to specified levels by oxidation. The refining operation produces a slag material that forms a continuous liquid layer on the surface of the liquid metal and combines with many of the iron impurities. The oxidized forms of chromium, vanadium, aluminum, titanium, tungsten, columbium, and zinc may be present in the slag.[40] Some carbon in the iron charge is converted to carbon monoxide and boils off the molten bath. Calcination of limestone in the bath produces carbon dioxide which also boils off the molten bath. In order to shorten the heating time, oxygen may also be injected into the bath.

When the molten steel bath is determined to be at the grade of steel required, the molten contents of the furnace are tapped through the tap

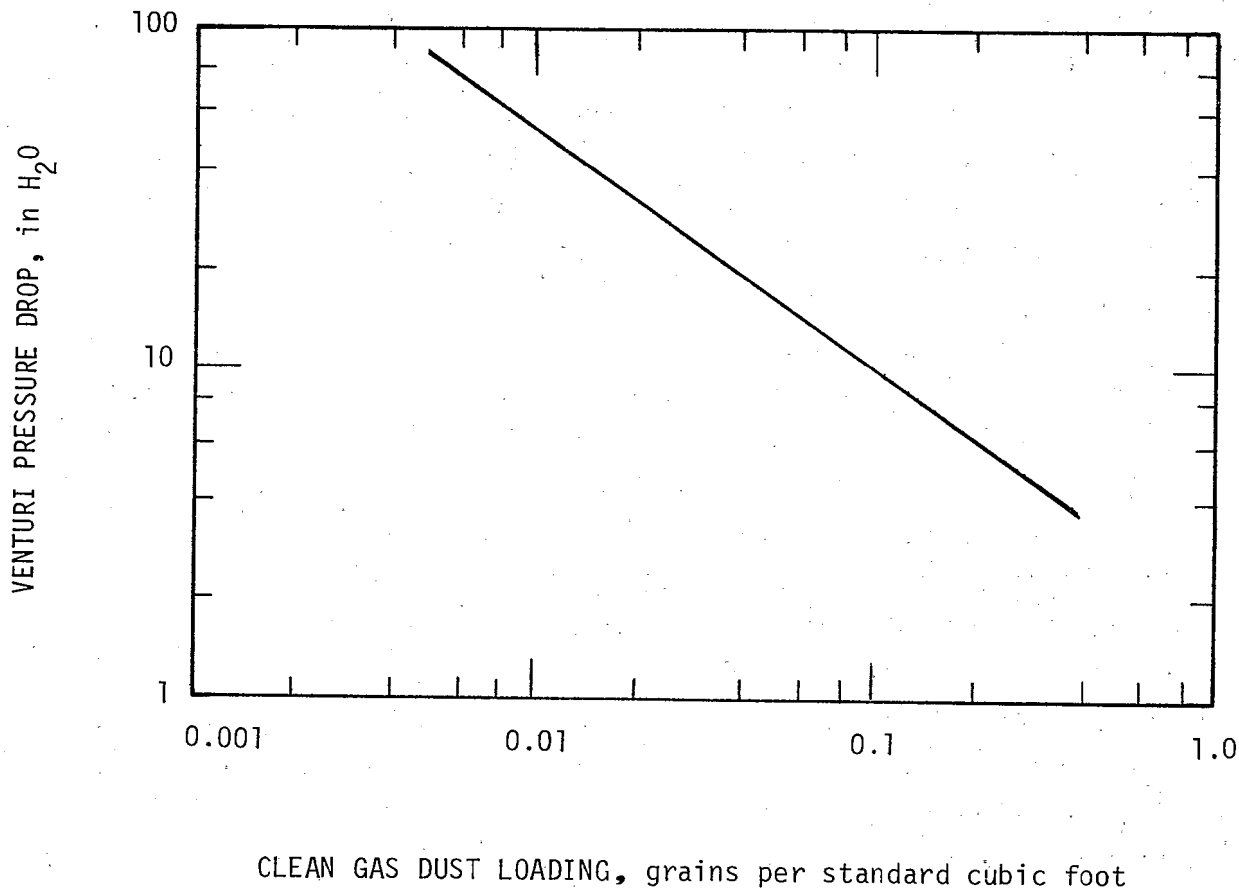

Figure 9.8.1-11 The relationship between clean-gas dust loading and pressure drop across venturi scrubber.[73]

hole into the steel ladles. The alloying, recarbonizing and deoxidizing materials are added to the molten metal before the slag starts flowing. The molten metal is poured into ingot molds for the particular final product (see Figure 9.8.1-12).

The furnace is a rectangular, shallow basin enclosed by refractory-bricked walls and roof. Heat is supplied from burners at one end. The fuel used includes coke oven or natural gas, oil, tar, or pitch. The flame travels the length of the furnace above the charge which rests on the hearth.[76]

The open hearth furnace is regenerative, i.e., uses the heat removed from the exhaust gases to preheat the combustion air in two regenerator or checker work sections. Each section serves alternately as the exhaust passage for the hot products of combustion and the inlet passage for combustion air and fuel.

From the checker sections, the gases are normally directed to a waste heat boiler, where the temperature is further lowered to an average of 260 to 315°C (500 to 600°F).[77] Open hearth furnace capacities vary from as little as 27 Mg to as much as 454 Mg per heat (i.e., batch of finished steel).[40] The median is between 91 and 181 Mg per heat. The time required to produce a heat is commonly between 8 and 12 hours when normal amounts of oxygen are used.[78] Average stack emission parameters for open hearth furnaces are shown in Table 9.8.1-16. Table 9.8.1-17 provides an indication of the size distribution of uncontrolled emissions from open hearth steel production during oxygen lancing. Currently, this is the only data available from the FPEIS data base that is considered suitable for publication. Other data are available upon request. Nationwide particulate emissions from open hearth furnaces were estimated to be 33 x 10^3 Mg per year in 1977.[42]

9.8.1.4.1 Emissions and controls. Emissions from open hearth furnaces depend upon the furnace operation and type of charge in each furnace and may vary during the cycle and from cycle to cycle. Oxygen lancing, used to decarbonize the metal, generates considerably more particulate matter. Usually up to 90 percent of the particulates from open hearth furnaces are iron oxides, predominantly Fe_2O_3.[40]

Particle size distribution varies considerably with the heat. For a furnace that is not oxygen-lanced, about 50 percent of the particulates

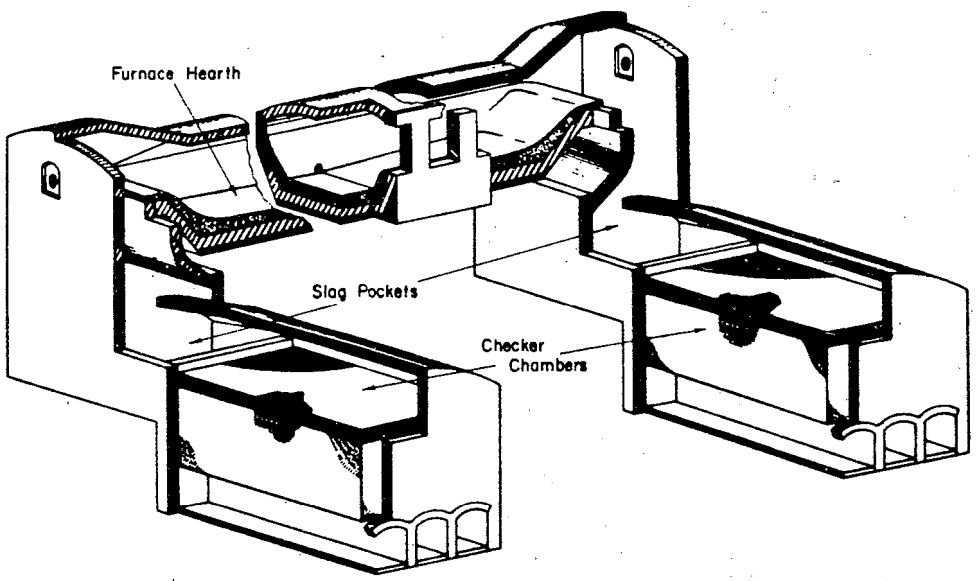

Figure 9.8.1-12. Cross-section of a basic open hearth furnace.[73]

Table 9.8.1-16. STACK PARAMETERS FOR OPEN HEARTH STEEL PRODUCTION FURNACES[41]

Facility or operation	Nationwide number of facilities or operations	Average stack ht., m	Average stack diam., m	Average temp., °C	Average flow, Am^3/min	Average operating rate per facility or operation (Gg of sinter produced per yr)
Oxygen lance	83	49	2.9	277	9775	254
No oxygen lance	71	45	2.2	411	2941	78

Table 9.8.1-17. SIZE SPECIFIC EMISSIONS FROM OPEN HEARTH STEEL PRODUCTION[a]

	Mass concentration, mg/DNCM (mass percent less than stated size)							
	Total	15.3 μm	12.9 μm	10.1 μm	7.28 μm	5 μm	2.5 μm	1.01 μm
Uncontrolled	8580	3580/41.8	3440/40.1	3350/39	3300/38.5	3270/38.2	3270/38.2	3270/38.2

[a]During oxlance, control device type not available.

are less than 5 micrometers. The particle size distribution for an oxygen-lanced furnace is reported as follows:[77]

Percent by weight	Size (micrometer)
69 percent	10
45 percent	5
20 percent	2

The small size of the particulate matter emitted from open hearth furnaces necessitates the use of high-efficiency collection equipment such as venturi scrubbers and electrostatic precipitators. Baghouses have also been installed for particulate emissions control, but they require that the gases be precooled.

A major problem with the efficiency of electrostatic precipitators on the open hearth furnaces is the open hearth process itself. The problem stems from the variation in the properties of emissions from the open hearth furnace during operation. During a period of heat, the moisture content of the bases may drop below the normal value of 18 to 20 percent, with a resultant increase in resistivity and drop in precipitator efficiency.[77] The relationship between the collection efficiency and size of a precipitator is shown in Figure 9.8.1-13. The figure shows that removing the dust from 150 m^3/sec (315,000 cfm) of open hearth waste gas required 5,400 m^2 (58,300 ft^2) of collecting surface for an efficiency of 95 percent. An increase in the collection to 99.3 percent can be obtained by increasing the collecting surface area to 9,000 m^2 (96,500 ft^2).

Wet scrubbers have been used in some cases, when the shop either had no waste heat boilers or when the existing boilers could not lower gas temperatures enough to warrant installation of electrostatic precipitators. The relationship between the outlet grain loading and pressure drop is illustrated in Figure 9.8.1-14.[77]

9.8.1.5 Basic Oxygen Furnace (BOF). The Basic Oxygen Process (BOP), which uses the BOF, is being employed increasingly to produce steel because of its high production rates, simplicity, and efficiency of operation. The

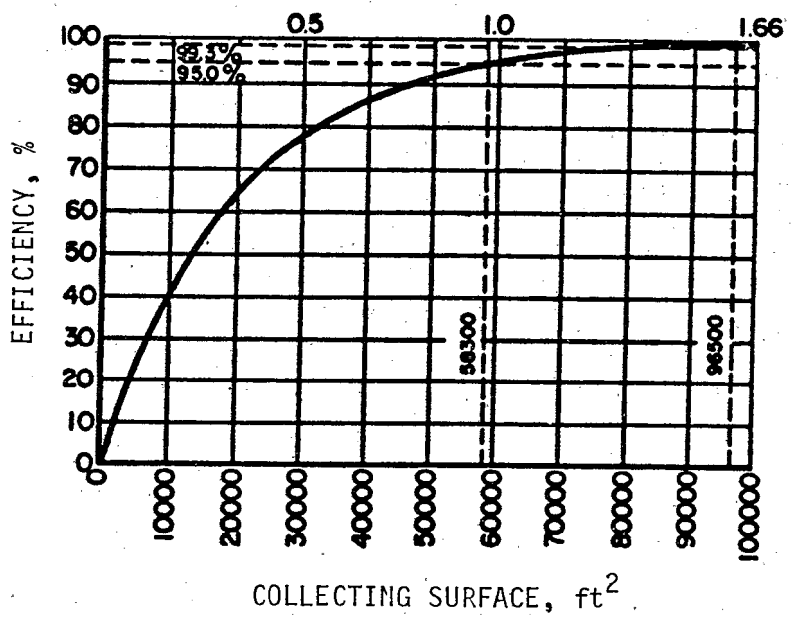

Note: $ft^2 \times 0.093 = M^2$

Figure 9.8.1-13 Relationship of electrostatic precipitator collecting surface to collection efficiency for open hearth emissions (8920 Am^3/min).[77]

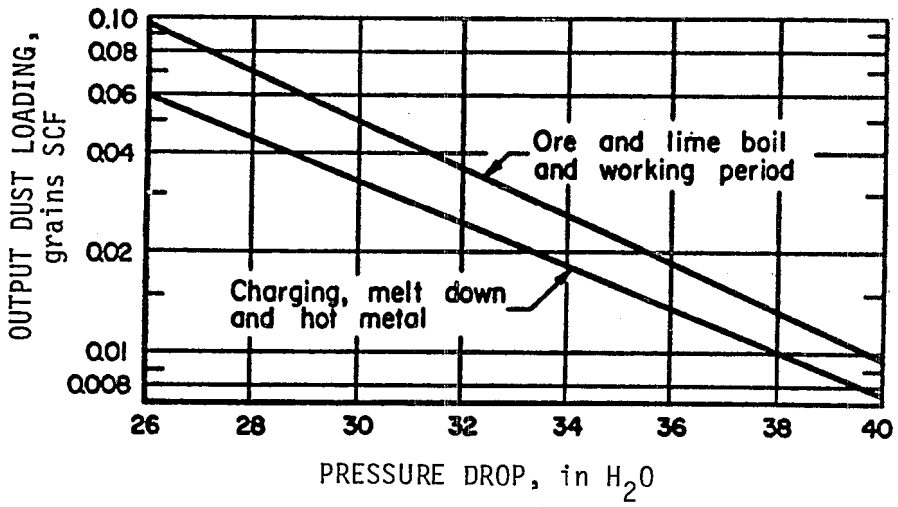

Note: grains/SCF x 2.29 = g/SM^3, and inches x 2.54 = cm

Figure 9.8.1-14 Relationship between clean-gas dust loading and pressure drop for a wet scrubber on an open hearth furnace (oxygen-lancing used during the refining period).[77]

BOF is a pear-shaped structure with a refractory lining (see Figure 9.8.1-15). A water-cooled lance is used to supply pure oxygen (typical ratio of 62 m^3/Mg steel produced) to a mixture of steel scrap, hot metal, and flux materials.[40] The oxygen reacts exothermically with the carbon in the metal. No other fuel is used, and this reaction provides enough heat so that steel scrap can be melted to form about 30 percent of the charge. Furnace capacities range from 68 to 295 Mg per heat, and the time required per cycle is very short. Typical 136 Mg BOF operations take the following times:[75]

Charge scrap	1 minute
Charge hot metal	2 minutes
Oxygen blow	20 minutes
Chemical tests	5 minutes
Tapping time	5 minutes
Total time	33 minutes

Molten iron from the blast furnace is brought to the basic oxygen furnace shop in railroad submarine ladle cars, and steel scrap is brought in by both rail and truck.

The BOF has displaced the open hearth as the major steel production process, but it is much less flexible because only a limited amount of scrap (25 to 30 percent) can be used in the charge.

Average stack emission parameters for BOFs are presented in Table 9.8.1-18. Nationwide particulate emissions from BOFs were estimated to be 18 x 10^3 Mg per year in 1977.[42]

9.8.1.5.1 Emissions and controls. Particulate emissions from BOFs range from 4.6 g/m^3 to 22.9 g/m^3.[43] The effluent gas may have a temperature of 290° to 1660°C (560° to 3000°F) depending on utilization of a waste heat boiler. About 85 to 95 percent of these particulates are less than 1 micrometer in size.[40] Transfer of hot metal to the BOF creates additional particulate emission problems. During the transfer, known as reladling, significant amounts of kish (precipitated graphite flakes) and iron oxide particulates are generated. Fugitive emissions occur primarily during charging, tapping, and slagging. During charging, the emissions occur when the primary hood is removed. Emissions from slagging and metal tapping are a result of violent mixing of the molten metal. Roof ventilation and canopy ventilation collection systems can control such emissions.

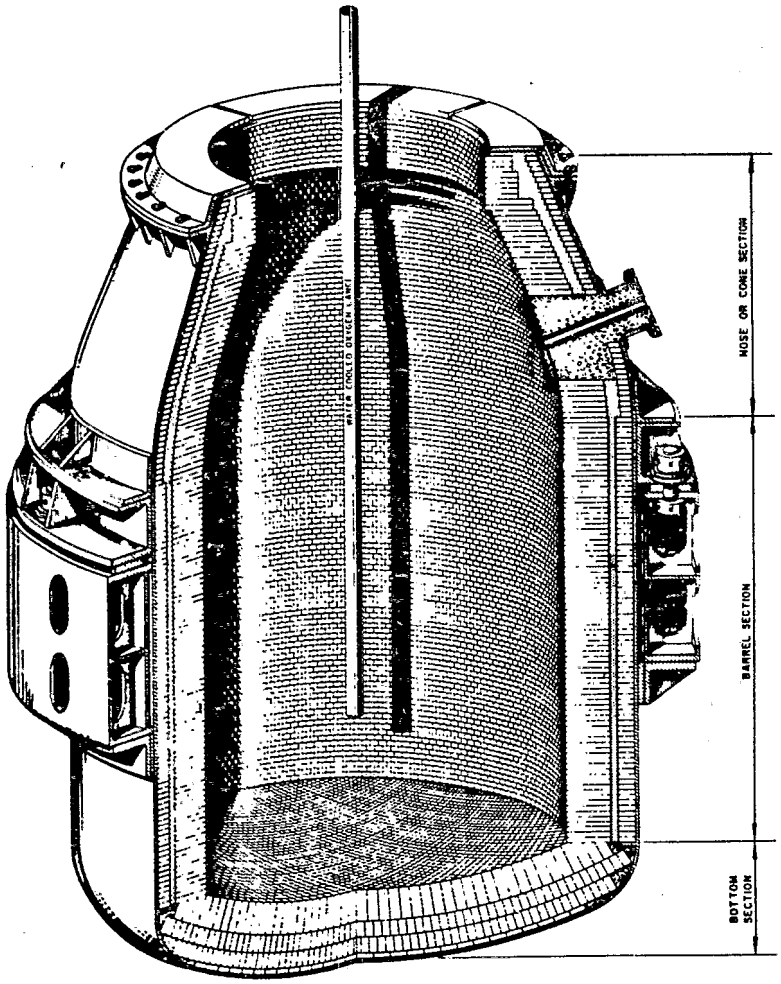

TYPICAL BASIC OXYGEN FCE
(BOF)

Figure 9.8.1-15 Basic oxygen furnace.[73]

Table 9.8.1-18. STACK PARAMETERS FOR BASIC OXYGEN STEEL PRODUCTION FURNACES[41]

Facility or operation	Nationwide number of facilities or operations	Average stack ht., m	Average stack diam., m	Average temp., °C	Average flow, Am^3/min	Average operating rate per facility or operation (Gg of sinter produced per yr)
Basic oxygen furnace operation	57	49	3.4	148	10,561	1.189

The particle size distribution of the emissions from a BOF are reported as follows:

Percent by weight	Size micrometer
33	149
54	74
84	10
97	5

Venturi scrubbers and electrostatic precipitators are commonly used to control particulate emissions from BOFs. The emissions are usually routed through either an open or a closed hood. The closed hood is designed to minimize infiltration air and, thus, reduce the exhaust gas volume as well as reclaim carbon monoxide. However, the high concentration of combustible carbon monoxide often limits the choice of cleaning equipment to a high-energy venturi scrubber because of safety considerations related to possible carbon monoxide caused explosions.[79]

Variability in gas flows, and the moisture content and temperature of the entering gas are the design considerations used in selecting an electrostatic precipitator. Electrostatic precipitators are selected over venturi or wet scrubbers when there is a water-treatment problem in a plant. Problems can include inadequate water-treatment facilities or lack of sufficient water. The problems relating to improper performance of wet scrubbers can be attributed to a lack of material to withstand the abrasive and corrosive nature of the dust-laden water, or a misapplication of construction materials.[73]

The particulate emissions from hot metal reladling are a mixture of kish and submicrometer, iron oxide fumes. Cyclones and baghouses are the only control equipment installations applied on a large scale.[78] More extensive data on control of fugitive particulates from hot metal reladling, skimming and furnace operations are given in Reference 80.

9.8.1.6 Electric Arc Furnace. Steel scrap (and sometimes blast-furnace produced iron) and flux materials are charged into the electric arc furnace (EAF). The EAF is a cylindrical vessel with a refractory lining and three, large carbon electrodes protruding through the roof. The heat required for a metallurgical reaction is generated by the arc from three electrodes.

Currents ranging from 10,000 to 20,000 amps are used.[40] Most modern arc furnaces for steelmaking are top-charged with molten blast furnace metal (when available), light and heavy scrap, alloying materials, and fluxes. The electrodes are moved out of the way while the furnace is being charged. The roof is returned to close the furnace, and electrodes are lowered to about 25 centimeters above the charge.[40] As current is applied through the electrodes, the charge is melted (see Figure 9.8.1-16). During this period, phosphorus, silicon, manganese, carbon, and other materials are oxidized and generally combine with the slag that is carefully controlled throughout the operation. Oxygen lancing is often used to increase production rates.

At the end of the process, the electrodes are raised, and the steel is tapped from the furnace. In tapping, depending on whether the furnace is fixed or tilting, the tap hole is either opened or tilted so that the steel is tapped from the furnace into a ladle. Average stack emission parameters for EAFs are presented in Table 9.8.1-19. Nationwide particulate emissions from EAFs were estimated to be 20 x 10^3 Mg per year in 1977.[42]

9.8.1.6.1 Emissions and controls. Particulate emissions from electric furnaces consist primarily of oxides of iron, manganese, aluminum, calcium, magnesium, and silicon. The typical composition of these emissions is presented in Table 9.8.1-20. Most emissions occur during the early "melting" operation, although significant quantities are also emitted during charging, tapping, and oxygen-blowing operations. Particulate emissions from electric arc furnaces vary from cycle to cycle and are affected by contaminants in the scrap steel, the amount of oxygen blown, and the amount of electrical power used in the furnace. The size distribution of the particulate emanating from electric arc furnace operation is as follows:[40]

Percent by weight	Particle size (micrometer)
10	0 to 2
17	2 to 4
34	4 to 8
9	8 to 12
15	12 to 44
15	less than 44

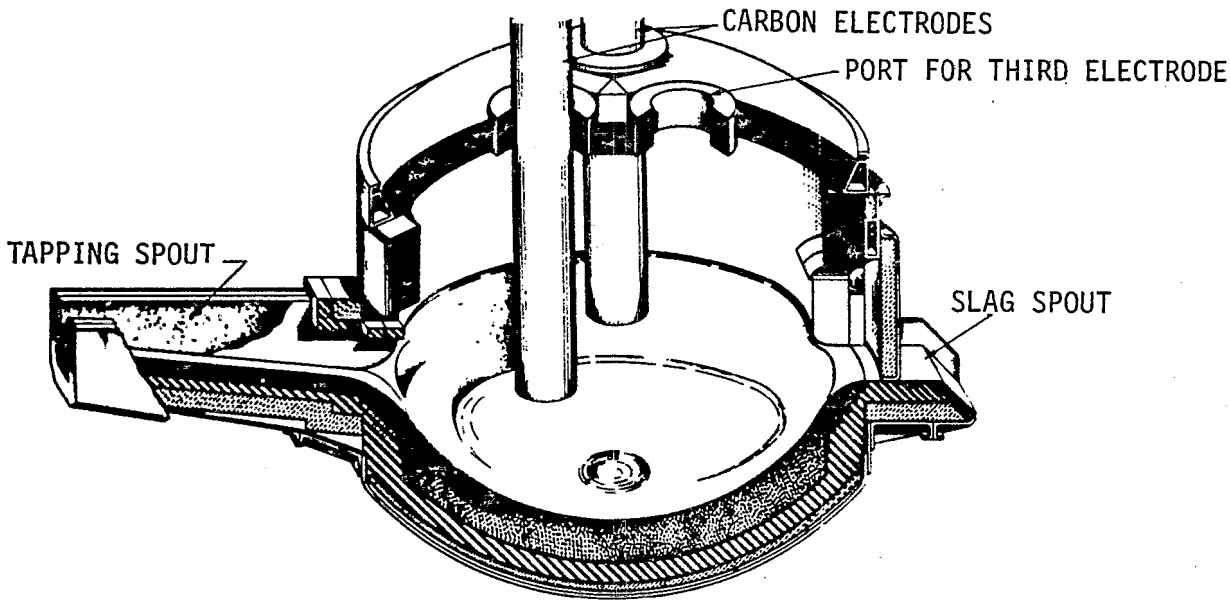

Figure 9.8.1-16 Direct-arc electric furnace.[73]

Table 9.8.1-19. STACK PARAMETERS FOR ELECTRIC ARC STEEL PRODUCTION FURNACES[41]

Facility or operation	Nationwide number of facilities or operations	Average stack ht., m	Average stack diam., m	Average temp., °C	Average flow, Am^3/min	Average operating rate per facility or operation (Gg of sinter produced per yr)
With oxygen lance	103	18.9	2.4	73	3723	173
No oxygen lance	47	22.6	3.1	122	3954	89

Table 9.8.1-20. TYPICAL CHEMICAL ANALYSIS OF ELECTRIC ARC FURNACE FUME[40]

Compound	Weight, %
Total iron	32.2
Loss of ignition	10.1
CaO	18.6
SiO_2	10.8
Total carbon	8.3
MgO	7.1
Al_2O_3	5.7
Cr_2O_3	1.3
MnO	1.2
V_2O_5	1
Total S	0.60
Na_2O	0.59
TiO_2	0.50
F	0.49
K_2O	0.37
BaO	0.20
Pb	0.15

The particle-laden gases generated by electric arc furnaces can be collected by any of several types of collection systems that direct the emissions to particle-removal devices such as baghouses, scrubbers, etc. Figure 9.8.1-17 shows schematics of four types of collection or ventilation systems.[81,82] The canopy hood system is not as efficient as the other three systems shown in Figure 9.8.1-17. However, unlike the three other systems, it can collect emissions during furnace charging and tapping. For this reason, the canopy hood system is appropriate for use with one of the other three systems. It is also possible to have a collection system consisting of collection ducts in the roof of the electric arc shop building which collects air from the entire building. Such a system also collects large volumes of air.

Fabric filters or baghouses are the most commonly used devices for cleaning electric furnace gases, although venturi scrubbers and electrostatic precipitators have been installed at some plants.[40] The use of baghouses on electric arc furnaces necessitates precooling of gases to protect the bags. Water spray towers, radiant coolers, and dilution with ambient air are commonly used to reduce the inlet temperature of the gases to the baghouse. More extensive data on control of particulates from electric arc furnaces are given in Reference 83.

The fugitive emissions resulting from charging operations are difficult to control because the collection or ventilation system must be removed to charge the furnace. Fugitive emissions can also be significant during slag removal and metal tapping as a result of violent mixing of the molten material. Canopy hoods and roof ventilation control systems are effective controls. Particulate collected in the emission control systems is sometimes recycled to the sintering operation. (Much of it is not recyclable because of zinc contamination.) Water pollution can be a problem when a wet scrubber is used.

9.8.1.7 Rolling, Shaping, and Finishing. Steel ingots are heated in a soaking pit furnace to prepare them for hot working (rolling). In the furnace, steel is heated until it is plastic enough for rolling to the desired shape. After the ingots are rolled into billets, blooms, or slabs, they are cooled and inspected. Surface defects are removed by grinding, chipping, peeling, or scarfing (see Section 9.8.1.8 for discussion of

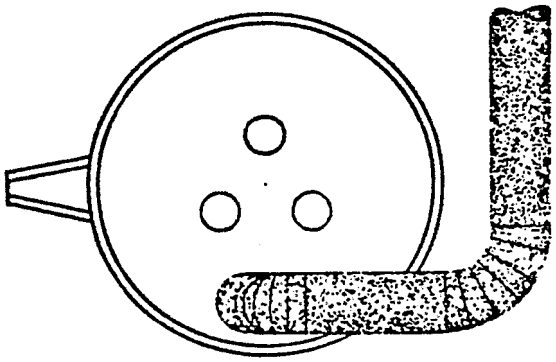

Fourth hole

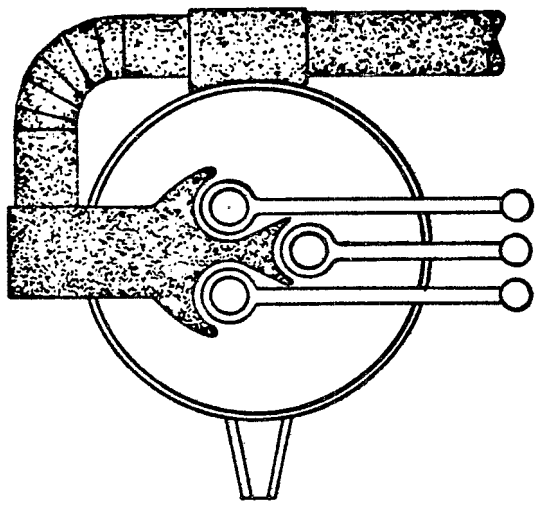

Side draft

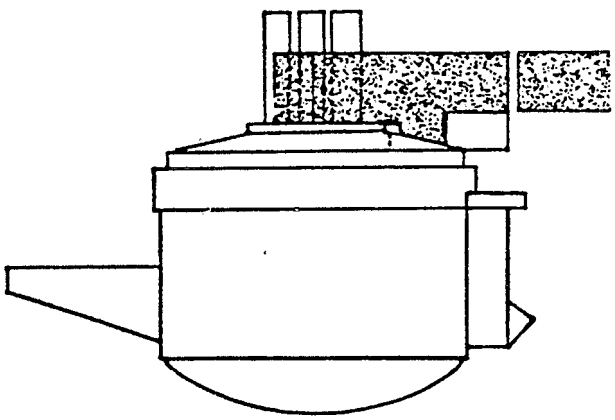

Combination hood

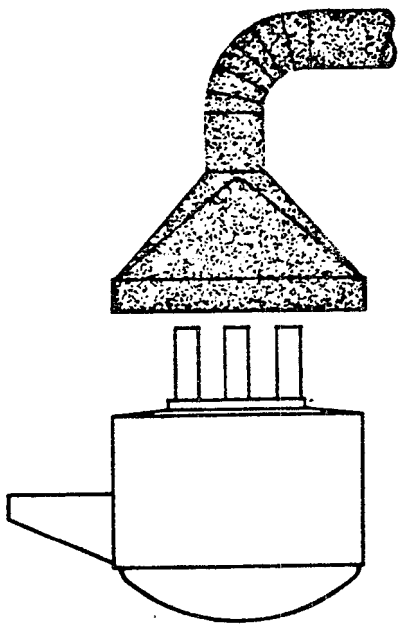

Canopy hood

Figure 9.8.1-17 Ventilation systems for electric arc furnaces.[81 82]

scarfing). Reheating furnaces are used for raising the temperature of the slabs, blooms, or billets for rolling into sheets, coils, or other shapes.[74] Acid treatment (called pickling) is used to clean the oxidized surface, hot-rolled steel in preparation for cold rolling.

The finishing operation consists primarily of treating the semifinished steel products by hot or cold working and processing to the final form. Some of the sheet and tin finishing operations are tempering, tin plating, galvanizing, chrome plating, coating, polishing, and continuous annealing. Average stack emission parameters for finishing operations are presented in Table 9.8.1-21.

9.8.1.7.1 Emissions and controls. Particulate emissions from rolling and shaping operations are considered negligible, unless the pits are fired with fuel other than gas. Grinding and chipping operations generate particulates which are confined to the buildings.

9.8.1.8 Scarfing. Slabs of steel, blooms, and billets are processed to remove defects that could be detrimental to the finished product. This can be done by chipping, grinding, or scarfing. Of these processes, scarfing can produce the largest amount of emissions. Before the scarfing operation takes place, the slag, bloom, or billet is heated to the rolling temperature. The process consists essentially of burning the surface of the steel with a jet of oxygen in combination with a fuel gas, such as acetylene or natural gas. The purpose of the fuel gas is to ensure that the steel is heated to a sufficiently high surface temperature (about 870°C) to bring about rapid oxidation and to localize melting of a thin layer of metal.[74] Approximately 3 mm (1/8 inch) of metal is removed from all four sides of the red-hot billets, blooms, or slags as they travel through the machine in a manner similar to the path through rolling mills.[40] Average stack emission parameters for scarfing are presented in Table 9.8.1-22. Nationwide particulate emissions from scarfing were estimated to be 6×10^6 Mg per year in 1977.[42]

9.8.1.8.1 Emissions and controls. Little information is available on the pollutants generated by the scarfing process. Emissions of particulates range from 0.9 to 1.8 g/m^3.[74]

Scrubbers, cyclones, baghouses, and wet and dry electrostatic precipitators are used to control emissions from scarfing installations in the U.S.

Fugitive emissions from scarfing occur from leaks in the machine, the scarfer's control equipment, and from open (outdoor) hand scarfing.[84]

Table 9.8.1-21. STACK PARAMETERS FOR STEEL PRODUCTION FINISHING OPERATIONS[41]

Facility or operation	Nationwide number of facilities or operations	Average stack ht., m	Average stack diam., m	Average temp., °C	Average flow, Am^3/min	Average operating rate per facility or operation (Gg of sinter produced per yr)
Pickling	13	15.2	1.6	41	2762	143
Soaking pits	123	36.9	1.7	384	4147	122
Grinding, etc.	12	14.9	1.0	120	18158	68

Table 9.8.1-22. STACK PARAMETERS FOR SCARFING[41]

Facility or operation	Nationwide number of facilities or operations	Average stack ht., m	Average stack diam., m	Average temp., °C	Average flow, Am^3/min	Average operating rate per facility or operation (Gg of sinter produced per year)
Scarfing operation	26	27	1.8	58	3850	1205

REFERENCES FOR SECTION 9.8.1

1. Bohn, R., T. Cosano, and C. Cowherd. Fugitive Emissions From Integrated Iron and Steel Plants. U.S. Environmental Protection Agency, Office of Research and Development. Washington, DC. Publication No. EPA-600/2-78-050. March 1978.

2. Draft of Standards Support and Environmental Impact Statement. Volume I: Proposed National Emission Standards By-Product Coke Oven Wet-Coal Charging and Topside Leaks. U.S. Environmental Protection Agency. Research Triangle Park, NC. June 1978.

3. Study of Coke Oven Battery Stack Emission Control Technology. Final Report. Volume II: Control Methods. Midwest Research Institute. Kansas City, MO. March 1979.

4. OAQPS Data File of Nationwide Emissions. U.S. Environmental Protection Agency, Office of Air Quality Planning and Standards. Research Triangle Park, NC. February 1979.

5. Kemner, D., D. Loudin, J. Smith, and G. Saunders. Control of Emissions from Dry Coal Charging at Coke Oven Batteries. PEDCo Environmental, Inc. Cincinnati, OH. October 1978.

6. Bratina, J. E. Fabric Filter Applications on Coke Oven Pushing Operations. Journal of the Air Pollution Control Association. Pittsburgh, PA. 29:9, September 1979.

7. Study of Coke Oven Battery Stack Emission Control Technology. Final Report. Volume I: Collection and Analyses of Existing Emission Data. Midwest Research Institute. Kansas City, MO. March 1979.

8. McClelland, R. O. Coke Oven Smokeless Pushing System Design Manual. U.S. Environmental Protection Agency. Publication No. EPA-650/2-74-076. September 1974.

9. Engineering Analysis of Emission Controls for Wet Quench Towers. Final Report. Midwest Research Institute. Kansas City, MO. January 1979.

10. Atmospheric Modeling Data from National Emission Data System (NEDS). U.S. Environmental Protection Agency, Office of Air Quality Planning and Standards. Research Triangle Park, NC. May 1979.

11. Preliminary Draft, Coke Oven Battery Stacks, Background Information for Proposed Standards. U.S. Environmental Protection Agency. Research Triangle Park, NC. May 1980.

12. Test Report. CF&I, Battery D. York Research Corp. Denver, CO. CF&I Steel Corp. July 24, 1978.

13. Test Report. CF&I, Battery D. Clayton Environmental Consultants, Inc. Southfield, MI. For U.S. Environmental Protection Agency. Based on testing done in August 1979.

14. Source Emission Survey for Lone Star Plant - Coke Oven Electrostatic Precipitator. Ecology Audits, Inc. Dallas, TX. For Lone Star Steel. February 1973.

15. Sampling and Analysis of Particulate Emissions from Inlet and Outlet of Coke Plant, East and West Precipitators. Armco, Inc. Houston, TX. November 1976.

16. Test Report. National Steel-Granite City, Battery C. Clayton Environmental Consultants, Inc. Southfield, MI. For U.S. Environmental Protection Agency. Based on testing done in July 1979.

17. Test Report. Kaiser Steel-Fontana Battery B. TRW, Inc. Redondo Beach, CA. For U.S. Environmental Protection Agency. Based on testing done in September 1979.

18. Compliance Test Report. Kaiser Steel, Battery B. From James Good, Kaiser Steel, to U.S. Environmental Protection Agency, Region IX, Enforcement Division. San Francisco, CA. August 8, 1979.

19. Compliance Test Report. Kaiser Steel, Battery C. From James Good, Kaiser Steel, to U.S. Environmental Protection Agency, Region IX, Enforcement Division. San Francisco, CA. April 2, 1979.

20. Compliance Test Report. Kaiser Steel, Battery D. From James Good, Kaiser Steel, to U.S. Environmental Protection Agency, Region IX, Enforcement Divison. San Francisco, CA. December 21, 1978.

21. Compliance Test Report. Kaiser Steel, Battery E. For U.S. Environmental Protection Agency, Region IX, Enforcement Division, San Francisco, CA. February 1979.

22. Coke Oven Emissions, Miscellaneous Emissions, and Their Control at Kaiser Steel Corporation's Fontana Steel Making Facility. State of California Air Resources Board. Sacramento, CA. November 1976.

23. Phelps, R. G. AISI-EPA-Battelle Coke Oven Door Sealing Program. Journal of the Air Pollution Control Association. Pittsburgh, PA. 29:9. September 1979.

24. Oliver, J. F., and J. T. Lane. Control of Visible Emissions at CF&I's Coke Plant. Pueblo, Colorado. Journal of the Air Pollution Control Association. Pittsburgh, PA. 29:9, September 1979.

25. Draft report, Study of Coke-Side Coke Oven Emissions. Clayton Environmental Consultants, Inc. For the U.S. Environmental Protection Agency. Contract No. 68-02-1408, Task No. 14, Volume 1. January 16, 1976.

26. Gas Cleaning Tests on Coke Pushing Emissions Captured in the Coke-Side Shed at Plant L. Appendix III to a letter from Edward Roe, Plant L, to Donald Goodwin, U.S. Environmental Protection Agency. Research Triangle Park, NC. April 14, 1975.

27. Letter from Edward Roe, Plant L, to Don Goodwin, U.S. Environmental Protection Agency. Research Triangle Park, NC. April 14, 1975.

28. Letter from David Anderson, Corporate Office for Plant T to Don Goodwin, U.S. Environmental Protection Agency. Research Triangle Park, NC. April 18, 1975.

29. Draft report, Source Testing of a Stationary Coke Side Enclosure. Clayton Environmental Consultants, Inc. For the U.S. Environmental Protection Agency, Contract No. 68-02-1408, Task No. 10, Volume 1. November 5, 1975.

30. Letter from David Anderson, Corporate Office for Plant T to Andrew Trenholm, U.S. Environmental Protection Agency. Research Triangle Park, NC. February 9, 1976.

31. Symons, C. Plant T memorandum titled, "Gas Cleaning Requirements for Coke-Pushing Emissions," to Andrew Trenholm, U.S. Environmental Protection Agency. Research Triangle Park, NC. January 17, 1975.

32. "Report of Emissions Tests at Plant P Coke Oven Battery C Coke Side Shed," by Clean Air Engineering, Inc. Palatine, IL. April 30, 1975.

33. Trenholm, A., U. S. Environmental Protection Agency. Research Triangle Park, NC, memorandum titled, "Meeting with the American Iron and Steel Institute." May 10, 1976.

34. Letter from John Brough, Plant P, to Andrew Trenholm, U.S. Environmental Protection Agency. Research Triangle Park, NC. November 13, 1975.

35. Draft report, Emission Testing and Evaluation of Koppers Smokeless Coke Pushing System. Clayton Environmental Consultants, Inc. For the U.S. Environmental Protection Agency. Contract No. 68-02-0630. December 15, 1975.

36. Letter from William Smith, Plant V, to Andrew Trenholm, U.S. Environmental Protection Agency. Research Triangle Park, NC. December 18, 1975.

37. Letter from William Smith, Plant V, to Andrew Trenholm, U.S. Environmental Protection Agency. Research Triangle Park, NC. April 14, 1976.

38. "Coke Oven Emissions - Letter Report on IITRI Project No. C6333, Task 1," memorandum from IIT Research Institute to Kirk Foster, U.S. Environmental Protection Agency. Research Triangle Park, NC. November 5, 1975.

39. Ertel, G. L. Quench Tower Particulate Emissions. Journal of the Air Pollution Control Association. Pittsburgh, PA. 29:9, September 1979.

40. Operation and Maintenance of Particulate Control Devices on Selected Steel and Ferroalloy Processes. U.S. Environmental Protection Agency. Research Triangle Park, NC. Publication No. EPA-600/2-76-037. March 1978.

41. Op. cit. Reference 10.

42. OAQPS Data File of Nationwide Emissions. U.S. Environmental Protection Agency, Office of Air Quality Planning and Standards. Research Triangle Park, NC. 1977.

43. Compilation of Emission Factors. U.S. Environmental Protection Agency. Publication No. AP-42. August 1977.

44. Test Report of Sinter Plant Emissions at Bethlehem Steel Corporation, Bethlehem Plant, Bethlehem, PA. York Research Corporation, Stamford, CT. Report No. 75-SIN-1. December 1975.

45. Particle Size Analysis, Granite City Steel, Granite City, Illinois. York Research Corporation. Stamford, CT. For the U.S. Environmental Protection Agency, Emission Measurement Branch. Task No. 19, Contract No. 68-02-1401. August 1975.

46. Emission Testing Report. Colorado Fuel & Iron. Pueblo, CO. U. S. Environmental Protection Agency. EMB Report No. 75-SIN-5. February 1976.

47. National Emission Data System, Point Source Listing - Sintering. U.S. Environmental Protection Agency file. Research Triangle Park, NC. June 27, 1974.

48. Oglesby, S., and G. B. Nichols. A Manual of Electrostatic Precipitator Technology, Part II - Application Areas. Prepared by Southern Research Institute for the National Air Pollutin Control Administration. Cincinnati, OH. Contract No. CPA 22-69-73. August 25, 1970. p. 445.

49. Reference 48, p. 499.

50. Particle Size Analysis, Kaiser Steel, Fontana, CA. York Research Corporation. Stamford, CT. For the U.S. Environmental Protection Agency, Emission Measurement Branch. Task No. 22, Contract No. 68-02-1401, Project No. 75-SIN-3. August 1975.

51. Bakke, E. The Application of Wet Electrostatic Precipitators for Control of Fine Particulate Matter. Mikro Pul Division, United States Filter Corporation. (Presented at the Symposium on Control of Fine Particulate Emissions from Industrial Sources. San Francisco, CA. January 15-18, 1974.)

52. Personal communication, memo to file on phone conversation between Jack Roehr, Western Precipitator, and Fred Hall, PEDCo, Cincinnati, OH. January 29, 1975.

53. Personal communication, memo to file on phone conversation between William Greg, Mikro Pul Divison, United States Filter Corporation, and Donald J. Henz, PEDCo, Cincinnati, OH. January 29, 1975.

54. Precipitator Efficiency Tests - Mikropul Pilot Wet Precipitator Sinter Plant Main Exhaust Jones & Laughlin Steel Corporation, Aliquippa, PA. February 4-6, 1974. WFI Sciences Company. Pittsburgh, PA. March 7, 1974.

55. Mazer, M. R., S. T. Herman, S. A. Jaasund. Wet Electrostatic Precipitator Demonstration for Sinter Plant Emissions Control. Bethlehem Steel Corporation. Bethlehem, PA. December 28, 1976.

56. Nowak, T. T. Sinter Plant Baghouse. Kaiser Steel. (AIME, 31st Iron Making Conference Proceedings, Chicago, April 10-12, 1972.) p. 14.

57. Rounds, G. L. and G. Geminder. Problems of Recycling Waste Oxides through the Sinter Strand (Baghouse Experience). Kaiser Steel Corporation. (Presented at the Minerals and the Environment Symposium, London, England, June 1974). p. 23.

58. Reference 56, p. 4.

59. Woodard, K. R. "Trip Report to Inland Steel Company Sinter Plant, East Chicago, Indiana", memorandum to J. V. Crowder, Emission Standards and Engineering Division, U.S. Environmental Protection Agency. Research Triangle Park, NC. August 19, 1976.

60. Emissions Source Test From a Baghouse Serving an Iron and Steel Sintering Plant at Kaiser Steel Corporation, Fontana, CA. Pacific Environmental Services, Inc. Santa Monica, CA. For the U.S. Environmental Protection Agency. Task Order No. 6, Contract 68-02-1405, PES Contract 098, Project No. 75-SIN-3. November 1975.

61. Report of Emissions Tests for Inland Steel Company at the Sinter Plant Main Stack, Baghouse, East Chicago, IN. Clean Air Engineering, Inc. Palatine, IL. P.O. No. HX-95861. February 1976.

62. Ball, D. F., et. al. Environmental Control in Iron Ore Sintering. (Presented at the Minerals and the Environment Symposium, London, England, June 1974). p. 23.

63. Anonymous. Steel Mill Sinter Plant Control Device Permit Applictions.

64. Harris, E. R. and F. R. Beiser. Cleaning Sinter Plant Gas with Venturi Scrubber. Journal of the Air Pollution Control Association 24:10. October 1974.

65. Air Pollution Emission Test, Sinter Plant, Granite City Steel Division, National Steel Corporation, Granite City, IL. Clayton Environmental Consultants, Inc. Southfield, MI. U.S. Environmental Protection Agency Contract No. 68-02-1408. EMB Report No. 75-SIN-4.

66. Sintering Plant Environmental Control Sintering Machine Windbox Gas Cleaning System, Burns Harbor Plant, IN. System Description, Bethelem Steel Corporation. Arthur G. McKee & Company. Cleveland, OH. Reference C4110. Bethlehem Reference No. 327-37000. May 1974.

67. Application for Permit to Construct Gas Cleaning or Emission Control Equipment at Sparrows Point Plant, Bethlehem Steel Corporation. Maryland State Department of Health and Mental Hygiene, Environmental Health Administration, Bureau of Air Quality Control. Baltimore, MD. March 2, 1973.

68. Personal communication, memo to file on phone conversation between Richard Schwartz and Fred Hall, PEDCo. Cincinnati, OH. January 31, 1975.

69. Report of Emissions Tests for Inland Steel Company at Plant 2, The No. 3 Sinter Plant, East Chicago, IL. Clean Air Engineering, Inc. Palatine, IL. P.O. No. KX-86730. July 1975.

70. Woodard, K. R. Visible Emission Observations at CF&I Steel Corporation on January 20, 1976. A trip report to Mr. J. C. Berry, Emission Standards and Engineering Division, U.S. Environmental Protection Agency. Research Triangle Park, NC. January 30, 1976.

71. Woodard, K. R. "Trip Report to Bethlehem Steel, Sparrows Point Sinter Plant", memorandum to J. U. Crowder, Emission Standards and Engineering Division, U.S. Environmental Protection Agency. Research Triangle Park, NC. August 19, 1976.

72. Woodard, K. R. "Trip Report to Bethelehem Steel, Burns Harbor Sinter Plant", memorandum to J. U. Crowder, Emission Standards and Engineering Division, U.S. Environmental Protection Agency. Research Triangle Park, NC. August 18, 1976.

73. Varga, J., Jr., and H. W. Lownie. A System Analysis Study of the Integrated Iron and Steel Industry. Battelle Memorial Institute. Columbus, OH. May 1969.

74. Industrial Process Profiles for Environmental Use. Chapter 24: The Iron and Steel Industry. U.S. Environmental Protection Agency. Publication No. EPA-600/2-77-023x. February 1977.

75. Labee, C. J. Steel Making at Weirton. Iron and Steel Engineer. Pittsburgh, PA. 46(10):W1. October 1969.

76. The Making, Shaping and Treating of Steel, Ninth Edition. U.S. Steel Corporation. Pittsburgh, PA. December 1970.

77. Vandegrift, A. E., et al. Particulate Pollutant System Study, Volume III. Midwest Research Institute. Kansas City, MO. U.S. Environmental Protection Agency Contract No. 22-69-104. May 1971.

78. Background Information for Establishment of National Standards of Performance of New Sources -- Iron and Steel Industry, Draft Report. Environmental Engineering, Inc. March 1971.

79. Background Information for Proposed New Source Performance Standards: Iron and Steel Plants, Volume 1. U.S. Environmental Protection Agency. Publication No. APTD 1352A. June 1973.

80. Preliminary Draft, Revised Standards for Basic Oxygen Process Furnaces - Background Information for Proposed Standards. U.S. Environmental Protection Agency, Office of Air Quality Planning and Standards. Research Triangle Park, NC. November 1980.

81. Air Pollutant Control Techniques for Electric Arc Furnaces in the Iron and Steel Foundry Industry. U.S. Environmental Protection Agency. Publication No. EPA-450/2-78-024. June 1978.

82. Inspection Manual for the Enforcement of New Source Performance Standards: Steel Producing Electric Arc Furnaces. U.S. Environmental Protection Agency. Publication No. EPA-340/1-77-007. May 1977.

83. Background Information for Standards of Performance: Electric Arc Furnaces in the Steel Industry. Volume 1: Proposed Standards. U.S. Environmental Protection Agency. Research Triangle Park, NC. EPA-450/2-74-017a. October 1974.

84. Bohn, R., et al. Fugitive Emissions from Integrated Iron and Steel Plants. Midwest Research Institute. Kansas City, MO. U.S. Environmental Protection Agency. Publication No. EPA-600/2-78-050. March 1978.

9.8.2 Ferroalloy Production

A ferroalloy is an alloy of iron and one or more other elements such as silicon and manganese. Ferroalloys are used for deoxidizing molten steels and for making alloy steels. They are produced primarily by using electric submerged arc furnaces and, to a limited extent, by metallothermic processes. More than 75 percent of all ferroalloys produced (e.g., manganese, silicon, and chromium ferroalloys) are produced in electric smelting furnaces (Figure 9.8.2-1).

Ferrosilicon is the major ferroalloy produced. It can be manufactured in either a blast furnace or an electric arc furnace. The submerged arc is more efficient in the reduction of oxides and is thus used instead of the blast furnace.

Ferroalloys are made by reduction of suitable oxides in the electric arc furnace. For example, in making ferrochromium the charge may consist of chrome ore, limestone, quartz (silica), coal and wood chips, along with scrap iron. In this case, the silica and lime form a slag. For ferrosilicon, the charge would consist mainly of iron scrap, silica, and coke. In every case, carbon monoxide is formed copiously and escapes through the pores and channels in the charge. The escaping gas carries large quantities of particulates, which are essentially submicrometer in size (50 percent less than 0.1 micrometer) and present a notoriously difficult control problem.

Both open and sealed submerged electric arc furnaces are used. Figures 9.8.2-2 and 9.8.2-3 present schematics of such furnaces. Average stack emission parameters for ferroalloy production are presented in Table 9.8.2-1.[1] The open furnaces are more prevalent; they have large gas flows, and the furnace gas is diluted to a level that makes the exit gas temperature low enough for fabric filtration.

Nationwide particulate emissions from ferroalloy production in 1977 have been estimated for ferroalloy material handling and for production of the various alloys as follows:[2]

Ferroalloy material handling	18×10^3 Mg per year
Fe-Si alloy production	13×10^3 Mg per year
Si-Mn alloy production	2×10^3 Mg per year

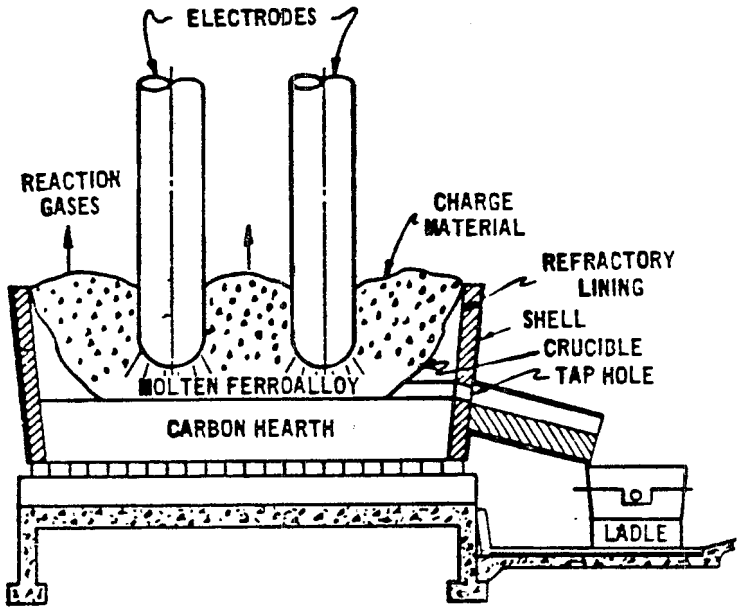

Figure 9.8.2-1 Submerged arc furnace for ferroalloy production.

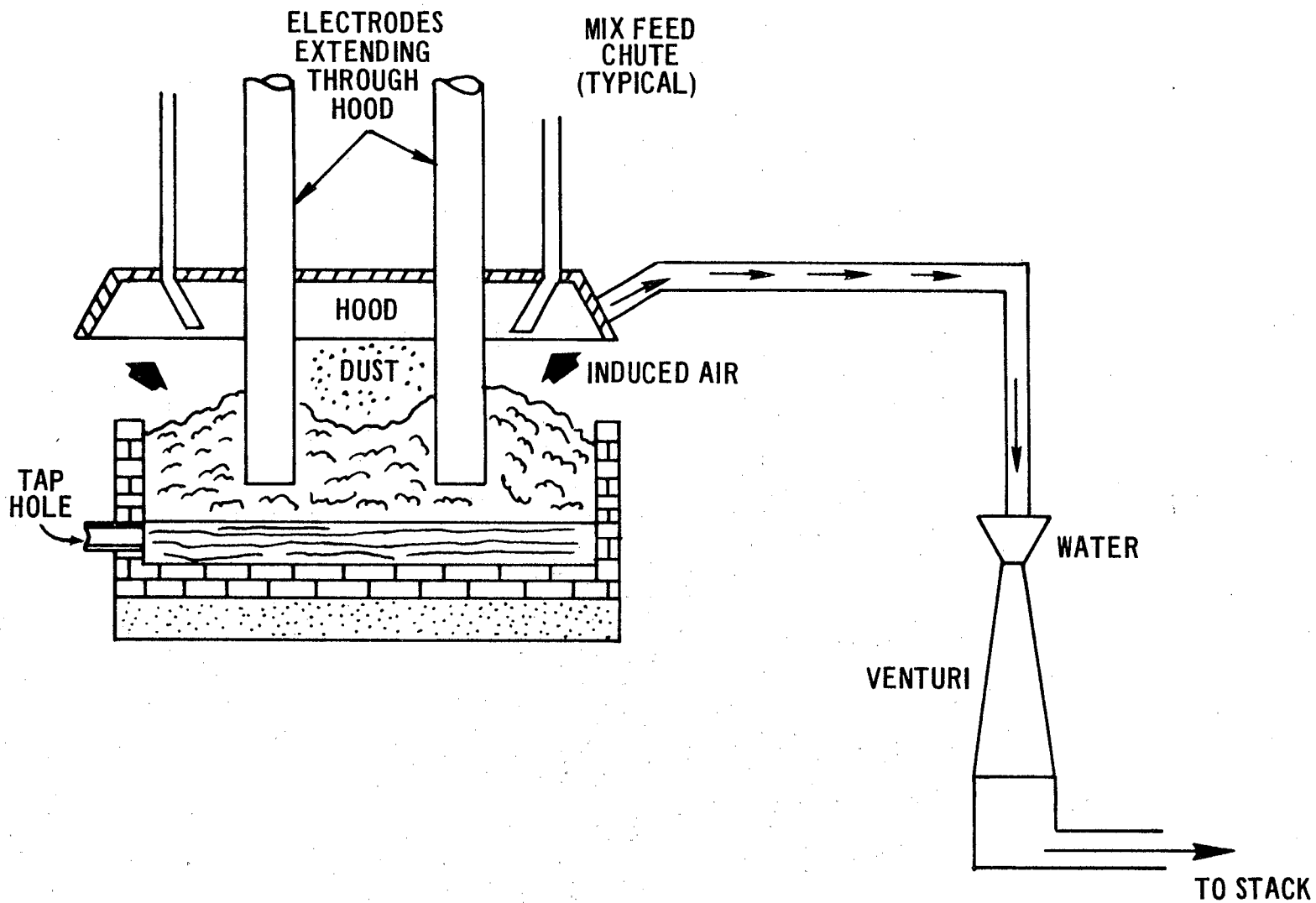

Figure 9.8.2-2 Open furnace controlled by a venturi scrubber.

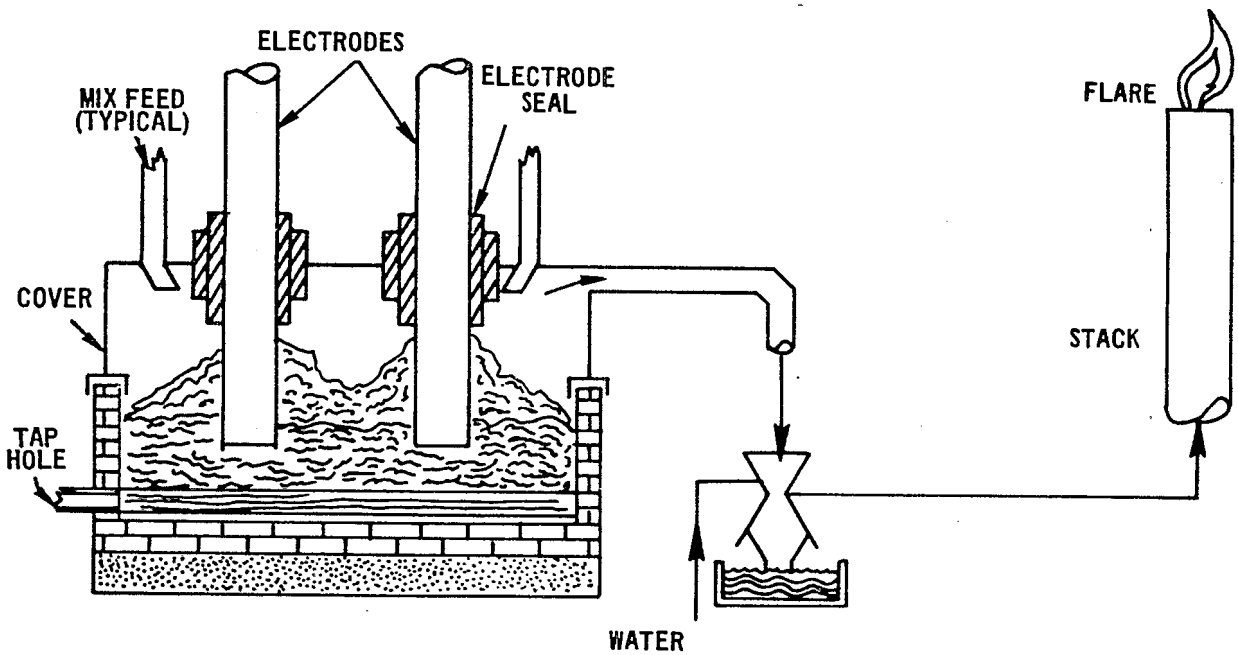

Figure 9.8.2-3 Sealed furnace controlled by venturi scrubber.

Table 9.8.2-1. STACK PARAMETERS FOR FERROALLOY PRODUCTION[1]

Facility or operation	Nationwide number of facilities or operations	Average stack ht., m	Average stack diam., m	Average temp., °C	Average flow, Am^3/min	Average operating rate per facility or operation, Gg of sinter produced per year
Open furnace:						
50 percent iron silicon	26	24.4	2.0	124	2243	26
75 percent iron silicon	15	31.7	5.4	146	4979	41
90 percent iron silicon	2	15.2	1.7	107	5806	7
Silicon metal	13	89.0	5.6	170	3945	10
Silicomanganese	13	23.2	3.9	91	1501	25
Screening	7	12.2	0.9	28	574	65
Ore dryer	5	12.5	7.9	93	2315	43
Low carbon Cr reactor	1	33.8	8.0	64	1642	21
Semi-sealed furnace:						
Ferromanganese	15	24.7	2.4	69	1845	25
General	31	108	8.7	190	109	154

Fe-Mn alloy production (electric furnace)	2×10^3 Mg per year
Fe-Mn alloy production (blast furnace)	1×10^3 Mg per year
Si metal alloy production	7×10^3 Mg per year
Other ferroalloys production	12×10^3 Mg per year

9.8.2.1 Emissions and Controls. Table 9.8.2-2 presents emission factors for ferroalloy production by the submerged arc electric furnace.[3] As shown in the table, uncontrolled furnaces generate large amounts of highly concentrated particulate pollution.

Table 9.8.2-3 presents particle size distributions for the particulates emitted from various ferroalloy manufacturing furnaces.[4,5] The data of Reference 4 are supported by a significant number of size measurements.

Table 9.8.2-4 shows the existing New Source Performance Standards for the ferroalloy industry. The May 20, 1976, revision consisted of only five minor corrections and wording adjustments. The main points of Table 9.8.2-4 are: (1) no gases shall escape the capture system at the tap and be visible for more than 40 percent of the tapping period; (2) when a blowing tap occurs, visible emissions are not limited; and (3) the standards require that carbon monoxide emissions of 20 volume percent or more be flared or otherwise burned.

Dust concentrations in the untreated furnace gas from covered and open furnaces differ considerably. Use of an open submerged arc furnace requires treatment of large volumes of hot gas--up to 300 m^3/sec (500,000 acfm) at temperatures up to 650°C (1200°F). These large volumes of gas and fumes formed from the smelting process consist of carbon monoxide and evaporated metallic oxides which rise through the charge bed to the surface of the charge. At the surface, the gas is burned with oxygen from the air, and very small particles of oxide fumes are formed.

Volumes of gases are considerably smaller from a covered electric furnace. In a covered furnace, unburned carbon monoxide gas is collected under the roof of the cover and withdrawn from the furnace without combustion. This results in a gas volume which may be as little as 3 percent of that from an open furnace.[6]

The average size of fume particles from open furnaces is reported to be less than 0.5 micrometers.[6] Except for the larger dust particles of feed

Table 9.8.2-2. EMISSION FACTORS FOR FERROALLOY PRODUCTION IN ELECTRIC SMELTING FURNACES[a,3]

Type of furnace and product	Particulates lb/ton	Particulates kg/MT
Open Furnace		
50% FeSi	200	100
75% FeSi	315	157.5
90% FeSi	565	282.5
Silicon metal	625	312.5
Silicomanganese	195	97.5
Semi-covered furnace		
Ferromanganese	45	22.5

[a]Emission factors expressed as units per unit weight of specified product produced.

Table 9.8.2-3. PARTICLE SIZE DISTRIBUTION OF PARTICULATES FROM FERROALLOY OPERATIONS[4,5]

Source operation	Fraction within particle size range					
	7-3 μm	3-1 μm	1-0.5 μm	0.5-0.1 μm	0.1-0.05 μm	0.05-0.01 μm
Electric furnace						
Ferrosilicon alloys	0.012	0.120	0.180	0.520	0.110	0.050
Ferromanganese alloys	0.096	0.475	0.285	0.1343	0.0007	0
Ferrochromium alloys	0.140	0.290	0.185	0.240	0.025	0.010
Miscellaneous ferroalloys	0.095	0.295	0.230	0.315	0.026	0.009

Table 9.8.2-4. STANDARDS OF PERFORMANCE FOR NEW SOURCES FERROALLOY PRODUCTION FACILITIES

Source category	Affected facility	Pollutant	Emission level	Monitoring requirement
Ferroalloy production facilities	Electric submerged arc furnaces	Particulate	0.99 lb/Mw-hr (0.45 kg/Mw-hr) ("high silicon alloys") 0.51 lb/Mw-hr (0.23 kg/Mw-hr) (chrome and manganese alloys)	No requirement
Proposed 10/21/74 (39 FR 37469)[a]				
Promulgated 5/4/76 (41 FR 18497)			No visible emissions may escape furnace capture system	Flowrate monitoring in hood
Revised 5/20/76 (41 FR 20659)			No visible emissions may escape tapping system for >40% of each tapping period	Flowrate monitoring in hood
		Opacity	15%	Continuous
		CO	20% volume basis	No requirement
	Dust handling equipment	Opacity	10%	No requirement

[a]Volume 39 of Federal Register, page 37469.

mix carried from the furnace, the particle fume size is generally below 2 micrometers.

The fugitive emissions occur from raw material handling and preparation and are estimated to be less than 0.25 percent of the material processed.[6]

Several methods are used to control emissions from electric submerged arc furnaces. Emissions from open industrial furnaces are controlled by wet scrubbers, fabric filters, and electrostatic precipitators. Emissions from covered furnaces, however, are controlled almost entirely by wet scrubbers (with only one known use of fabric filters)[7], primarily because of high gas temperature and safety hazard of handling carbon monoxide.

High-energy wet scrubbers on open furnaces producing silicomanganese, high-carbon (HC) ferrochromium, and ferrochrome-silicon have been demonstrated to achieve 96 to 99 percent efficiency with a pressure drop of about 14 kPa (150 cm water gauge).[6] However, large volumes of gas from open furnaces and a high-pressure drop across the scrubber require high energy. In some cases, the power requirements may be as high as 10 percent of the power supplied to a furnace.

High energy venturi scrubber systems used on covered furnaces producing ferromanganese, silicomanganese, and 50 percent ferrosilicon were found to remove up to 99.9 percent of the particulates from the collected reaction gases.[6]

Baghouses on open ferroalloy furnaces producing silicomanganese, ferrochrome-silicon, and silicon metal have shown collection efficiencies of about 99 percent.[6] The ratio of air-to-cloth is about 1.5:1 to 2:1, thus requiring substantial cloth area relative to the volume of gas to be cleaned. Exhaust gas temperatures in excess of 200°C (500°F) require precooling of the gas before cleaning.

Unequal baglife on treating silica fumes necessitates frequent bag replacement; the bags last only from 18 months to 2 years. Dust collected in the dry state is usually wetted before disposal.

Electrostatic precipitators have also been installed on some large open furnaces producing ferrochromium and ferrochrome-silicon. The overall collection efficiency (including tapping emissions) on the HC ferrochrome furnace was more than 98 percent.[6] Preconditioning the gases

before they enter the precipitator increases precipitator efficiency.

Table 9.8.2-5 gives some of the performance data from actual source tests of various control devices.[8] EPA Method 5 was used; a high pressure drop was often required for the venturi scrubbers at the listed performances.

Table 9.8.2-5. PERFORMANCE OF PARTICULATE CONTROLS ON FERROALLOY FURNACES[a,8]

Plant	Type of furnace	Product	Power, MW Design	Power, MW Operating	Control device	ΔP, Inches H_2O	Gas T, °F	Particulate emissions lb/MWhr	Particulate emissions g/DSCF	Remarks
A2	Sealed	FeMn	30	27	2 parallel 3-stage venturis			0.024	0.016	water-activated venturi
B	Sealed	SiMn	27	23	Venturi	50		0.009	0.010	
K	Sealed	50% FeSi	42	31	2 series venturi -> mist eliminators -> wet ESP			0.0026	0.0018	ΔP venturi 1 = 12" ΔP venturi 2 = 24"
L1	Open	SiMn		25	2 parallel venturis	57		0.36	0.009	0.61 lb/MW hr @ 47" H_2O and 1.60 @ 37"
M	Open	Si	17		3 parallel baghouses		200	0.61	0.0020	
N	Open	SiMn		7.2	Aeronetics scrubber			1.5	0.078	
O	Open	FeSi 75%	36	22	Baghouse		379	1.02	0.017	
Q	Open	FeCrSi		20	Baghouse		172	0.44	0.0027	
R	Sealed	FeCrSi	26	18.6	2 venturis -> wet cyclone			0.0093	0.0107	ΔP venturis, 8" and 80"
P	Semi-enclosed	50% FeSi		46.5	2 parallel venturis	75		0.078	0.058	
S	Sealed	HC[b] FeCr		18	Baghouse -> flare		145	0.036	0.032	
T	Open	HC FeCr	40	33	ESP			0.65	0.016	Gas conditioning, partial collection of tap fumes

[a]EPA Method 5 testing.
[b]High carbon = HC.

REFERENCES FOR SECTION 9.8.2

1. National Emission Data System, Data File, SCC Codes. U.S. Environmental Protection Agency. Research Triangle Park, NC.

2. OAQPS Data File of Nationwide Emissions. U.S. Environmental Protection Agency, Office of Air Quality Planning and Standards. Research Triangle Park, NC. 1977.

3. Compilation of Emission Factors. U.S. Environmental Protection Agency. Publication No. AP-42. August 1977.

4. Particulate Pollutant System Study, Volume II: Fine Particle Emissions. NAPCA Contract No. CPA-22-69-104. Midwest Research Institute. Kansas City, MO. pp 231-335. August 1971 (updated 1973).

5. Weast, T. E., et al. Fine Particulate Emission Inventory and Control Survey. U.S. Environmental Protection Agency. Research Triangle Park, NC. Publication No. EPA-450/3-74-040. January 1974.

6. Engineering and Cost Study of the Ferroalloy Industry. U.S. Environmental Protection Agency. Publication No. EPA-450/2-75-008. May 1, 1974.

7. Background Information for Standards of Performance: Electric Submerged Arc Furnaces Producing Ferroalloys. Volume 3: Supplemental Information. U.S. Environmental Protection Agency. Publication No. EPA-450/2-74-018c. April 1976.

8. Background Information for Standards of Performance: Electric Submerged Arc Furnaces Producing Ferroalloys. Volume 2: Test Data Summary. U.S. Environmental Protection Agency. Publication No. EPA-450/2-74-018b. 1974.

9.8.3 Gray Iron Foundries

Gray iron foundries produce iron castings. The production process essentially involves the furnace melting of scrap iron to produce an appropriate molten iron alloy which is then poured into sand molds to produce castings. Gray iron foundries depend primarily upon the cupola furnace for the economical production of large quantities of gray iron. Electric furnaces and small reverbatory furnaces are also used in some foundries. Nationwide particulate emissions in 1977 from gray iron foundry furnaces and nonmelting operations were estimated to be 87 x 10^3 Mg per year.[1]

9.8.3.1 Cupola

9.8.3.1.1 Description. The cupola is the oldest and still the most universally used furnace for the production of gray iron. If not adequately controlled, a cupola becomes a large contributor to air contaminants.

The cupola is a firebrick-lined, vertical, cylindrical steel shell, approximately 68 cm to 270 cm (27 inches to 108 inches) in diameter, supported on structural steel legs.[2] Air is supplied through a windbox and tuyeres by either positive displacement blowers, centrifugal blowers, or fan type blowers. Figure 9.8.3-1 presents a schematic of a cupola.[3] As in blast furnaces, air is the largest single raw material of the heat; the air's weight depends mainly on the size of the furnace.

Cupola preparation for melting consists of securing the bottom drop door, placing a layer of sand over the door to prevent heat damage, closing the tap and slag holes, and charging coke for the bed. The bed is ignited and allowed to burn through; then the charges of coke, flux limestone or soda ash, and iron are placed in alternate layers up to the charge door. The blast is turned on, and melting begins. Charging continues until the desired tonnage of iron has been melted, after which the air is shut off, and the furnace bottom is dropped to allow the remaining charges to fall on the foundry floor. This material is recharged during the next operating cycle.[3]

9.8.3.1.2 Emissions and controls. Gray iron cupolas emit dust, fumes, smoke, gases up to 16 percent carbon monoxide, and oil vapors. Oil mist and smoke in cupola exhaust gases are due largely to oil and grease contamination of the scrap metal charges to the furnace. Factors affecting particulate

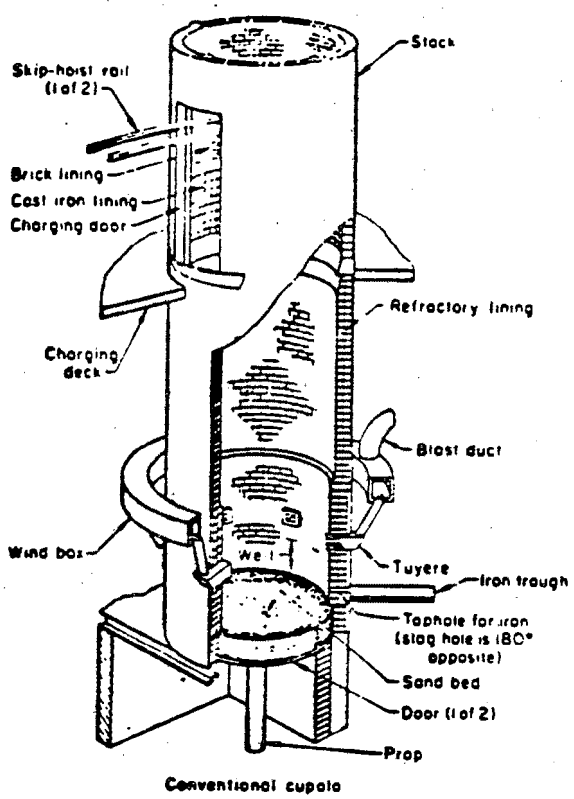

Figure 9.8.3-1 Conventional lined cupola.[3]

emissions from gray iron cupola foundries include the following:[4]

- o Furnace design
- o Charging practice
- o Quantity and quality of the charge
- o Quantity of coke used
- o Melting zone temperature
- o Volume and rate of combustion air
- o Use of techniques such as oxygen enrichment and fuel injection

Table 9.8.3-1 provides data from the Fine Particulate Emissions Information System (FPEIS) that are the most suitable for this publication.[5] These data represent an emission test of a gray iron cupola controlled with a venturi scrubber having a pressure drop of from 10 to 23 kPa (40 to 94 inches wg). The control techniques employed to reduce particulate emissions from cupolas vary widely. The most commonly used were wet caps, which can be placed directly on top of cupola stacks and therefore require no gas-conducting pipes or induced draft blowers. However, due to their low collection efficiencies, the particulates are not adequately controlled to meet existing or new regulations.

Cyclonic dust collectors remove 70 to 80 percent of the particulate matter from the gas stream, depending on the particle size range.[4]

Wet scrubbers or high energy venturi scrubbers are capable of removing 95 percent of the particulate emissions from cupolas. Variable throat venturi scrubbers are especially useful for cupola operations because their pressure drop can be adjusted to achieve a desired efficiency.

Fabric filters on cupolas necessitate cooling of the gas prior to entrance to the baghouse. Radiant or water spray cooling or both are employed for this purpose. The fabric filter installations achieve particulate removal efficiencies as high as 99 percent.[4]

9.8.3.2 Electric Furnaces. Electric arc furnaces are used in the melting of ferrous scrap to produce molten gray iron or steel. An electric furnace consists of a refractory-lined, cup-shaped steel shell with a refractory-lined roof through which three graphite electrodes are inserted. Scrap is charged to the furnace and melted; alloying elements and fluxes are added as needed.

Table 9.8.3-1. SIZE SPECIFIC EMISSIONS FROM A GRAY IRON CUPOLA[5]

Process and fuel type	Control device sections (in series)	Control device operating parameter		Mass concentration, mg/DNCM (mass percent less than stated size)							
				Total	15.3 μm	12.9 μm	10.1 μm	7.28 μm	5 μm	2.5 μm	1.01 μm
Cupola 55	Prespray section	ΔP 10-23 kPa	Uncontrolled	2000	1780/87.9	1780/87.9	1770/87.8	1770/87.7	1765/87.35	1730/85.4	1360/67.3
	Venturi rod		Controlled	39.57	35.2/88.7	34.8/87.7	34.2/86.2	33.2/83.7	32.1/80.06	29.2/73.6	23.6/59.4
	Collector and cooling section		Efficiency	98	98	98	98	98.12	98.18	98.31	98.26

The high temperatures of the arcs attained while melting the scrap produce dense fumes consisting of iron and other metal oxides plus organic particulates from oil and other contaminants in the scrap.

Electric induction furnaces are being used increasingly by the foundry industry for melting scrap iron. An electric inductive furnace consists of a drum-shaped vessel that converts electrical energy into heat by setting up a magnetic field when the primary coil of the transformer is energized. Alternating current is passed through a primary coil with a solid iron core. The molten iron is contained within a loop that surrounds the primary coil and acts as a secondary coil. The current flowing through the primary coil induces a current in the loop, and the electrical resistance of the molten metal creates the heat for melting. The heated metal circulates to the main furnace chamber and is replaced by cooler metal.

Induction furnace shops feature a preheater in which all water and most of the oil are removed from the scrap to preclude the possibility of an explosion hazard in the furnace. Emissions generated during preheating are controlled. Additional emissions from induction furnaces are generated during melting, backcharging, and tapping. Recently installed induction furnaces also control melting emissions. Backcharging and tapping emissions have not yet been successfully controlled.

9.8.3.2.1 Emissions and controls. Particulate matter, fumes, smoke, and metal oxides (formed when a vaporized metal contacts air) are emitted by electric furnaces. Emissions are captured using either roof or side draft hoods and, in the case of steel furnaces, by direct furnace evacuation.

Baghouses are used to reduce emissions from electric arc furnaces at an efficiency of 95 to 99 percent.[6] Source tests by EPA at two foundries with fabric filter controlled electric arc furnaces included inlet and outlet particulate measurements.[6] Emissions at the new foundry showed a reduction from 715.4 mg/DNCM (3.42 kg/Mg charge) to 8.92 mg/DNCM (0.047 kg/Mg charge). Emissions at the other foundry with retrofitted control equipment showed a reduction from 886.3 mg/DNCM (6.27 kg/Mg charged) to 10.6 mg/DNCM (0.054 kg/Mg charged).

Recently installed induction furnaces are equipped with particulate collection devices of the fabric filter types.

REFERENCES FOR SECTION 9.8.3

1. OAQPS Data File of Nationwide Emissions. U.S. Environmental Protection Agency, Office of Air Quality Planning and Standards. Research Triangle Park, NC. 1977.

2. Field Operations and Enforcement Manual for Air Pollution Control. Volume II: Inspection Procedures for Specific Industries. Pacific Environmental Services, Santa Monica, CA. U.S. Environmental Protection Agency Contract No. CPA-70-122. August 1972.

3. Systems Analysis of Emissions and Emissions Control in the Iron Foundry Industry, Volume I. A. T. Kearney, Inc. Chicago, IL. U.S. Environmental Protection Agency Contract No. EPA-22-69-106. February 1971.

4. Controlled and Uncontrolled Emission Rates and Applicable Limitations for Eighty Processes. U.S. Environmental Protection Agency. Publication No. EPA-450/3-77-016. September 1976.

5. Calvert, S., et al. FPEIS Test Series 55. U.S Environmental Protection Agency. Research Triangle Park, NC. Publication No. EPA-600/2-76-282. December 1976.

6. Air Pollutant Control Techniques for Electric Arc Furnaces in the Iron and Steel Foundry Industry. U.S. Environmental Protection Agency. Publication No. EPA-450/2-78-024. June 1978.

9.8.4 Steel Foundries

9.8.4.1 Process. The charge material in steel foundries is ferrous scrap. Steel foundries produce castings as a finished product by melting the scrap and pouring the hot metal into molds. Steel castings are made for manufacturers of heavy industrial machinery such as bulldozer frames, locomotive wheels, and farm machinery. Direct electric arc, induction, and open hearth are common furnaces used in steel foundries. The melting operation involves furnace charging, melting, tapping the furnace into a ladle, and pouring the steel into molds.

9.8.4.2 Emissions and Controls. While emissions from steel foundries are similar to those from gray iron foundries, there are some differences. The oxygen lance, when used, temporarily produces a large gas volume accompanied by increased particulate emissions and substantially large amounts of carbon monoxide. The particle size distribution of the flue gas from three gray iron electric arc furnaces is given in Table 9.8.4-1.[1] The dust from steel-producing furnaces falls into the same range, with 80-85% of the particles below 5 micrometers in diameter.

Emissions are captured using roof hoods, side draft hoods, or direct furnace evacuation for electric arc furnaces. Direct evacuation is accomplished under slightly negative pressure in the furnace. It is the most effective method for collecting melting emissions and also results in the lowest gas volumes. Unlike roof or side draft hoods, direct evacuation requires greater cooling of the exhaust gases before they enter the gas cleaning device. Cooling is usually accomplished by introducing dilution air, although atomizing water spray chambers, radiant-convection coolers, and air- or water-cooled ductwork may also be used. Lower exhaust gas volume reduces the cost of the particulate collection equipment.

Fabric filters are the most frequently employed device for reducing particulate emissions from electric arc furnaces in steel foundries. Fabric filters also collect dust in a dry form which facilitates disposal. The typical filter media used for bag construction includes woven or felted glass, Dacron or Orlon, and other synthetic fibers.[1]

Particulate emissions from electric arc furnace steel foundries are predominantly less than 5 micrometers in diameter, and fabric filters

Table 9.8.4-1. PARTICLE-SIZE DISTRIBUTION FOR PARTICULATE EMISSIONS FROM THREE ELECTRIC ARC FURNACE INSTALLATIONS MELTING GRAY IRON[1]

Particle size, micrometers	Cumulative percent by weight for indicated particle diameter		
	Foundry A	Foundry B	Foundry C
Less than 1	5	8	18
Less than 2	15	54	61
Less than 5	28	80	84
Less than 10	41	89	91
Less than 15	55	93	96
Less than 20	68	96	96
Less than 50	98	99	99

are generally recognized as the most efficient collectors of these particulates.[2] Particulate removal efficiency for properly designed and operated fabric filters is 99.5 percent.[1] Emission tests of a 33.2 Mg capacity furnace obtained by EPA that used EPA Method 5 to measure particulates showed emission concentrations of 5.73 mg/DSCM for an 80-minute period during back charging, 2.8 mg/DSCM for an 80-minute period during the middle of the heat and 8.71 mg/DSCM for a 30-minute period after back charging but prior to oxygen lancing.[2] The average outlet loading was 5.74 mg/DNCM. EPA obtained EPA Method 5 test data from another foundry that showed emissions reductions from 686 mg/DNCM to 6.63 mg/DNCM.[2] This last test was for 4 hours and encompassed two consecutive heats.

Wet scrubbers, although applicable to electric arc furnace foundries, have been installed at very few locations. Wet scrubbers are generally not as efficient as baghouses for collecting the fine particles generated by electric arc furnaces. A commercially available high energy scrubber, the Steam-Hydro scrubber, achieves high removal efficiency of submicrometer particles by means of steam injected at supersonic velocity in a mixing section.[2]

Maintenance and capital costs are less for wet scrubbers than for baghouses. However, disposal of scrubber wastewater requires water treatment and/or water recirculation systems at the plant. Efficiencies in the range of 98 to 99 percent are possible for particulate removal.

A wet scrubber on an electric arc furnace would produce about 0.21 m^3/Mg (50 gal/ton) of wastewater if operated prudently. Available data indicate that this wastewater would have a pH of approximately 8.0 and a total organic carbon content of less than 25 mg/l.

Treatment to remove suspended solids would be required before the wastewater could be discharged to a receiving stream. Water treatment technology for removal of suspended solids is well established. "Best practicable control technology currently available," as defined by EPA, will reduce total suspended solids to 50 mg/l, a 99.8 percent removal.[3]

The use of the above treatment would require disposal of approximately 6.9 kg of solids per Mg of iron (13.8 lb/ton) and 8.0 kg of solids per Mg of steel (15.9 lb/ton). These solids would be in the form of high-solids sludge containing up to 60 percent solids.

9.8.4.3 Solid Waste Handling and Disposal. Dust collected from foundries is usually placed in landfills. Economic recycling of this iron-bearing dust has not been demonstrated. The most effective method for handling dust is a pelletizing operation which practically eliminates re-entrainment problems. Dust from the baghouses can be emptied into sealed bags or containers which would also serve to contain dusts at the disposal site. Another option is to produce a slurry by injecting water into the dust handling system. Many foundries will probably continue to handle loose dust, usually transporting it by truck to the disposal site. Open-bodied trucks should have a cover placed over the load, and vehicle speed should be limited to avoid losses during transport.

9.8.4.4 Landfill Disposal. Care in disposal of electric arc furnace dust is necessary because relatively high levels of trace elements, including the toxic metals lead, cadmium, and arsenic, are often present as metal oxides, which are insoluble in pure water but are slightly soluble in acidic solutions. Landfill site design must preclude horizontal or vertical migration of these metals to surface or groundwaters. The Safe Drinking Water Act of 1974 provides for protection of potential drinking water supplies and sets limits on the concentration of certain toxic metals. Where geo-hydrological conditions do not provide reasonable protection against leaching of these elements, devices such as impervious liners are needed.

Where wet scrubbers are used, scrubber wastewater should be contained in a settling pond and recirculated. Protection of groundwaters and surface waters is essential, and the landfill disposal requirements for scrubber sludge are the same as those for dust.

REFERENCES FOR SECTION 9.8.4

1. Varga, J. Jr., and H. W. Lownie. A System Analysis Study of the Integrated Iron and Steel Industry. Battelle Memorial Institute, Columbus, OH. May 1969.

2. Air Pollutant Control Techniques for Electric Arc Furnaces in the Iron and Steel Foundry Industry. U.S. Environmental Protection Agency. Publication No. EPA-450/2-78-024. June 1978.

3. Development Document for Effluent Limitations Guidelines and New Source Performance Standards for the Steel Making Segment of the Iron and Steel Manufacturing Point Source Category. U.S. Environmental Protection Agency. EPA Report No. EPA-440/1-74-024a. June 1974. pp. 352-357.

9.8.5 Primary Aluminum

Primary aluminum production involves the recovery of metallic aluminum from bauxite ore. Bauxite ore is processed into an alumininum-containing material called alumina. This processing generally occurs in plants located in coastal areas, and it involves a calcining operation which can produce significant amounts of particulate emissions. Processed alumina is shipped to reduction plants where it is electrolytically reduced to aluminum metal. Primary aluminum production plants are located in the Pacific Northwest, the Gulf Coast region, and the Ohio River Valley. These plants are located in areas with low electric power costs since electric power requirements for this industry are high.

Between 1967 and 1972, domestic primary aluminum production capacity increased from 3,200 to 4,340 Gg. However, during the same period, domestic plant utilization decreased from 98 to 86 percent. Nevertheless, estimates indicate that between 1972 and 1984, the production of aluminum may double.[1]

Particulate emissions from aluminum material handling and electric reduction were estimated to be 38,500 Mg in 1977.[2]

9.8.5.1 Process Description and Emissions. Raw bauxite ore contains aluminum compounds plus a variety of other compounds including SiO_2, Fe_2O_3, and TiO_2. Bauxite is processed to produce an aluminum-containing material called alumina (Al_2O_3), which is shipped to primary aluminum-production facilities for processing into aluminum metal by electrolytic reduction. A schematic of the production process at a primary aluminum production facility is shown in Figure 9.8.5-1.[3] All domestic primary aluminum production is performed by electrolytic reduction of the alumina to aluminum and oxygen; the reaction takes place in a molten salt bath of cryolite (a double fluoride salt of Na_3AlF_6). Figure 9.8.5-2 is a schematic of an aluminum electrolytic reduction cell.[4]

The reduction process is carried out in a cell or pot made of carbon-lined steel. A carbon block is extended into the pot, which contains the mixture of alumina dissolved in the molten cryolite electrolyte. The pot and the carbon block are electrically connected to serve as a cathode and an anode, respectively. The cell is heated to between 950 and 1000°C by

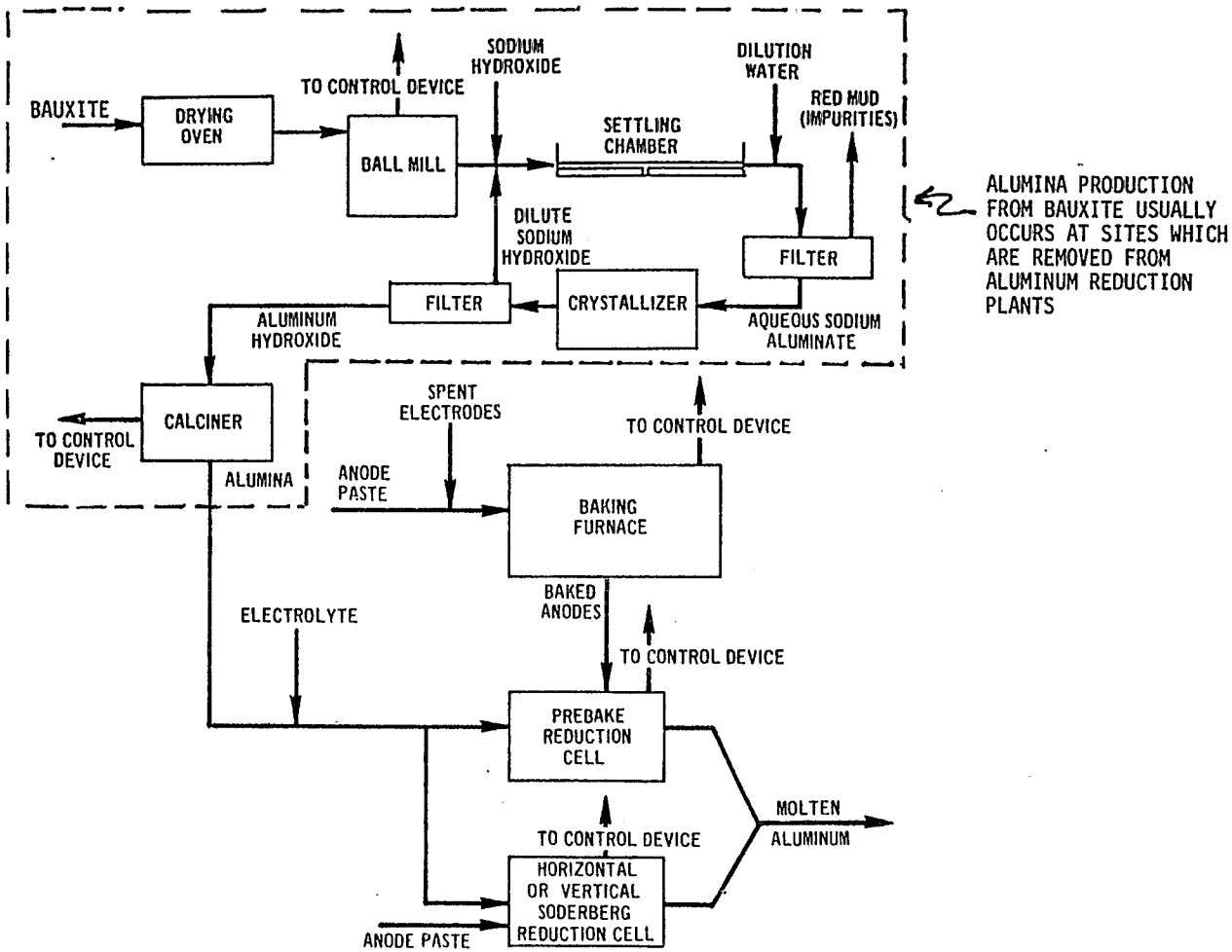

Figure 9.8.5-1 Schematic diagram of primary aluminum production process.[3]

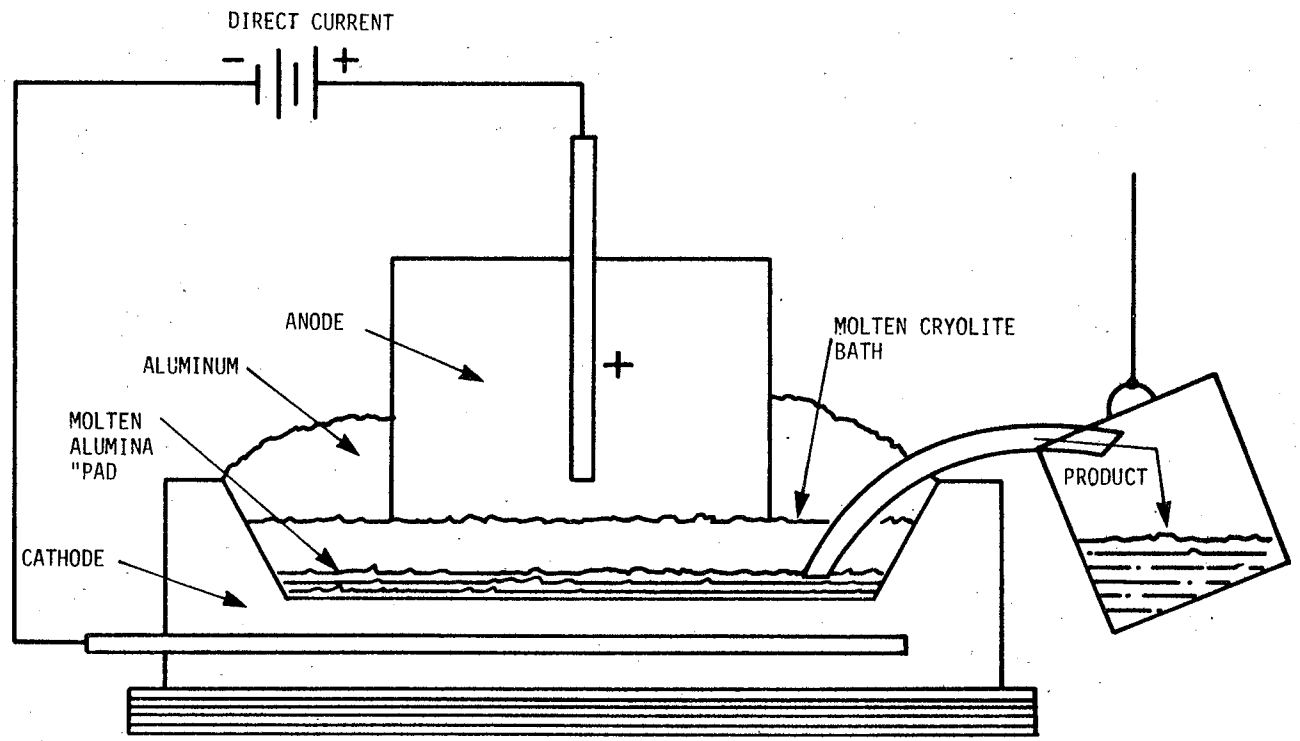

Figure 9.8.5-2 Aluminum reduction cell.[4]

the heat generated from the electrical resistance between the electrodes. Aluminum ions migrate to the cathode, where they are reduced to aluminum. The aluminum settles to the bottom of the pot and is removed periodically. The oxygen from the alumina compound migrates to the carbon anode, where it reacts with the carbon to form CO or CO_2. The carbon block anode is thus consumed and must be replaced periodically.

The two basic types of reduction cells, prebake (PB) and Soderberg, differ in the process by which the carbon anode is prepared. The PB cell anodes are replaced about every 10 to 20 days. The anodes are prepared by mixing crushed carbon material with pitch, forming this mix into the anode shape and slowly baking the anode to form a solid block. The Soderberg cell anode is formed by periodically adding a carbon and pitch mixture to the top of the electrode. Heat from the process then drives off the lower boiling organics, and the new anode material is baked to the old anode. Thus, the anode is continually replenished. The Soderberg cell can be further classified into two cell types: the horizontal stud Soderberg (HSS) and the vertical stud Soderberg (VSS).

The anode bake ovens and aluminum reduction pots are the major sources of particulate emissions. Particulate emission test results from a number of primary aluminum production facilities are given in Table 9.8.5-1.[5] Reduction cell emissions contain particles which are composed of alumina, carbon, cryolite, aluminum fluoride, calcium fluoride, chiolite, and ferric oxide.[6] Particle size distributions of PB and HSS cell emissions are tabulated in Table 9.8.5-2.[7] These emissions, as well as those from refining and casting furnaces, range in size down to submicrometer levels.[6] The composition of particulate emissions from a variety of secondary emission sources in primary aluminum plants is shown in Table 9.8.5-3.

Dust constituents from four sources of industrial process fugitive emissions are shown in Table 9.8.5-4.[8] About 10 to 25 percent by weight of the generated particulate matter is composed of fluoride compounds.[8] Average composite particle size distribution data for fugitive emissions from a reduction cell facility are presented in Figure 9.8.5-3. Fugitive emissions from the anode baking and metal refining operations are in the submicrometer size range.[8]

Table 9.8.5-1. RESULTS OF EPA SOURCE TESTS FOR PARTICULATES FROM PRIMARY ALUMINUM REDUCTION CELLS AND ANODE BAKE PLANT, mg/DNCM (kg/Mg OF ALUMINUM OR ANODE PRODUCED)[5]

Facility Potline Anode bake	A	B	B_1	D	E	F	G
Cell type	VSS	PB	PB	PB	HSS	VSS	
Control[a]							
Primary	BS-WESP	FBDS	FBDS	FBDS	ST-WESP	ST-WESP	ESP
Secondary	SS	None	None	None	None	None	
Particulates							
Front half							
Primary inlet	1550 (32.9)	352 (55)	316.2 (49)	325.1 (26.3)	163.1 (33.3)	5972 (14.2)	39.35 (0.39)
Secondary inlet	5.9 (10.9)						
Primary outlet	1.5 (0.03)	40.8 (7.9)	3.5 (0.615)	4.8 (0.38)	7.3 (1.48)	5.3 (0.13)	
Secondary outlet	0.9 (1.64)						
Total							
Primary inlet	1553 (33.8)		320.5 (49.7)	446.6 (36.1)	200.2 (40.9)	750.5 (18.0)	80.3 (0.78)
Secondary inlet	7.2 (13.3)						
Primary outlet	1.5 (0.05)		5.1 (0.9)	13.9 (1.11)	14.6 (2.98)	27.7 (0.62)	
Secondary outlet	1.6 (2.9)						

[a]Control: BS - "Bubbler" scrubber.
WESP - Wet electrostatic precipitator.
FBDS - Fluidized bed dry scrubber.
ST - Spray tower.
SS - Spray screen.

Table 9.8.5-2. REPRESENTATIVE PARTICLE SIZE DISTRIBUTIONS OF UNCONTROLLED EMISSIONS FROM PREBAKED AND HORIZONTAL STUD SODERBERG CELLS[7]

Particle size range, micrometers	Particles within size range, wt %	
	Prebaked	Horizontal stud Soderberg
Less than 1	35	44
1 to 5	25	26
5 to 10	8	8
10 to 20	5	6
20 to 44	5	4
Greater than 44	22	12

Table 9.8.5-3. ATMOSPHERIC POLLUTANTS FROM SECONDARY SOURCES IN ALUMINUM PLANTS[a,6]

Process and emissions source	Particulate emissions
Raw materials handling	
Alumina unloading and transfer	Al_2O_3
Cryolite unloading, transfer and grinding	Na_3AlF_6, AlF_3
Pot lining operation	
Anthracite coal grinding and transfer	Coal dust
Anode preparation (prebake plants only)	
Coke unloading, transfer and grinding	Coke dust
Pitch unloading and transfer	Pitch dust
Anode baking furnaces	Carbon dust
Cleaning of baked anodes	Coke dust
Cleaning of copper rods and steel stubs	Copper and iron dust
Electric arc cast iron furnace	Iron oxide
Paste making (Soderberg plants only)	Carbon dust
Aluminum refining	
Ingot casting furnaces	$AlCl_3$, Al_2O_3

[a]Excluding the pot line (reduction cells) and monitor (roof vent) emissions.

Table 9.8.5-4. INDUSTRIAL PROCESS FUGITIVE EMISSION SOURCES AND CONTAMINANTS[8]

Emission sources	Emissions[a]
Material handling	Al_2O_3, AlF_3
Anode baking	Coke and pitch dust
Electrolytic reduction cell Soderberg anodes	Al_2O_3, AlF_3, Na_2CO_3, CaF_2, $Na_5Al_3F_{14}$, carbon dust, condensed HC, and tars
Refining	$AlClO_3$, Al_2O_3, Cryolite

[a]Alumina (Al_2O_3), cryolite (Na_3AlF_6), aluminum fluoride (AlF_3), fluorspar (CaF_2), sodium carbonate (Na_2CO_3), chiolite ($Na_5Al_3F_{14}$).

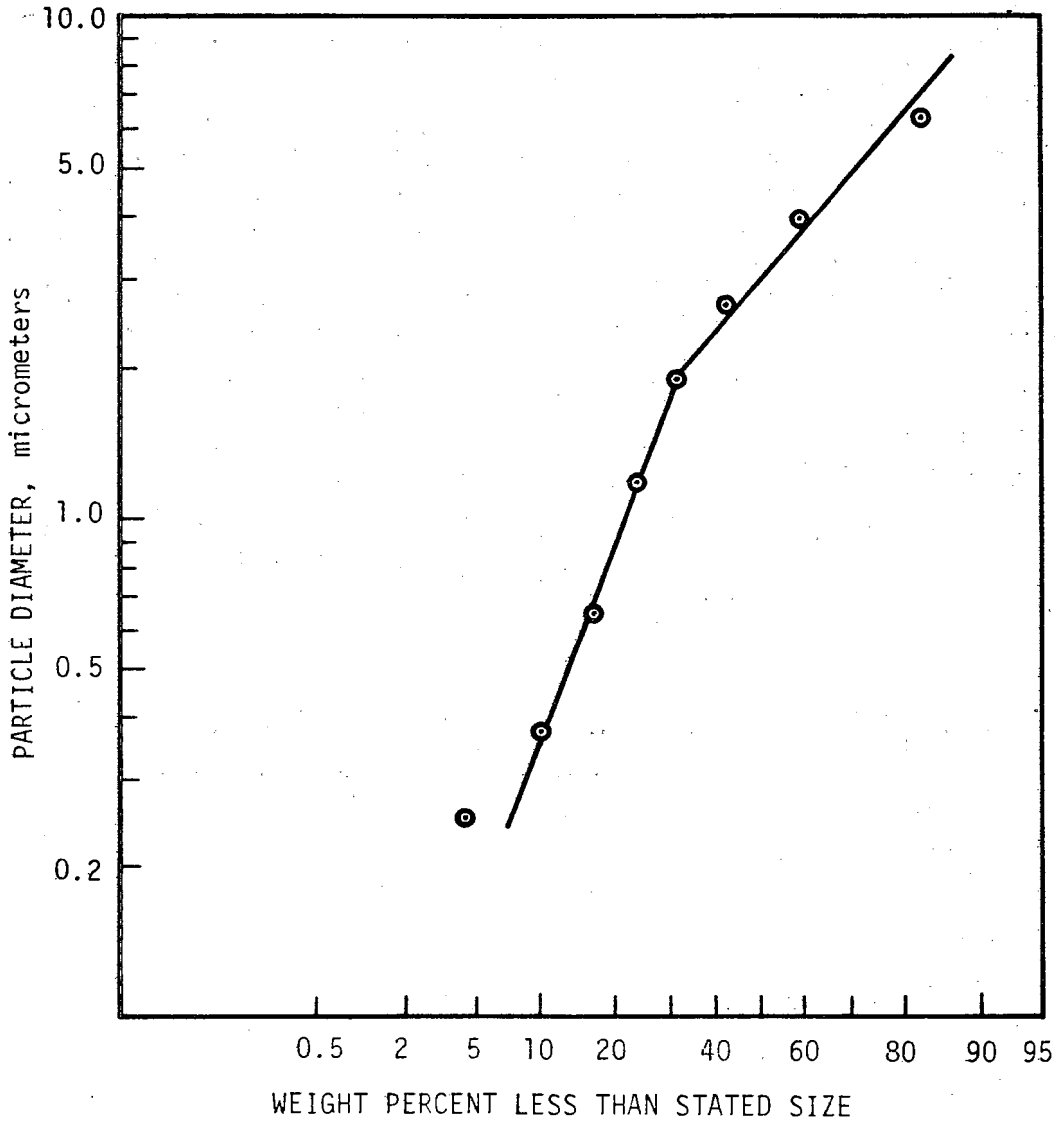

Figure 9.8.5-3 Average composite particle size distribution by weight for reduction cell facility roof ventilator emissions.[8]

Typical stack parameters for major emission sources in the primary aluminum industry are summarized in Table 9.8.5-5.[9] These data are representative of nationwide operations and facilities and can be used to estimate the impact that a specific source could have on ambient air quality.

9.8.5.2 Particulate Control Techniques. Fluorides emitted from primary aluminum-production operations are the pollutant of primary concern because of well documented adverse environmental effects. Thus, the main control emphasis is on fluorides, which are emitted in gaseous and particulate forms. Source tests have shown that if fluoride emissions are well controlled, the resulting control of particulate emissions is also good.[4] Controlled emissions of particulates determined by EPA source tests accomplished at facilities that represent applications of best fluoride control technologies are shown in Table 9.8.5-1.[5]

A variety of control devices have been used on many different kinds of gases and particles emitted from the reduction cells. One or more types of wet scrubbers (such as venturi, packed beds, and floating beds) have been used to control gaseous and particulate emissions from PB, HSS, and VSS cells, and from anode baking ovens. Particulate control methods such as wet and dry electrostatic precipitators, multiple cyclones, and dry scrubbing systems are being employed on anode baking ovens, and PB and VSS cells.[5] Recently, however, the dry control systems have become the predominant control system for all types of cells.

Table 9.8.5-6 presents estimated particulate and fluoride removal efficiencies for a number of control systems as applied to reduction cell emissions. The dry scrubbing system outlined in this table involves the use of fluidized alumina solids to absorb fluorides. Any entrained particles are then collected in bag filters. A schematic of this system is shown in Figure 9.8.5-4.[10]

The minimum collection efficiency of a wet electrostatic precipitator is 95 percent.[11] Based on particulate emission measurements and over 40 hours of visual emission observations by EPA, it was concluded that a dry control system (such as alumina fluid bed) or a wet scrubber in series with a wet electrostatic precipitator provides the best system of particulate control.

Table 9.8.5-5. ALUMINUM ORE ELECTROREDUCTION STACK PARAMETER DATA[9]

Emission sources	Number of sources	Average stack height, m	Average stack diameter, m	Average exhaust gas temperature, °C	Average gas flowrate, Am^3/s	Average operating rate, Gg
Prebake cells	50	36.6	4.57	58	842	123
Horizontal stud Soderburg	83	21.3	5.36	54	421	51.4
Vertical stud Soderburg	5	21.3	4.57	39	59.4	62.4
Materials handling	56	20.4	0.853	79	18.7	84.9
Anode bake furnace	20	40.5	1.77	112	28.6	106

Table 9.8.5-6. AIR POLLUTION CONTROLS FOR PRIMARY ALUMINUM REDUCTION POTLINE EMISSIONS[4,6]

Type of cell	Existing collectors	Est. removal efficiencies, %		Latest collectors	Est. removal efficiencies, %	
		Fluorides[a]	Particulate matter		Fluorides[a]	Particulate matter
HSS[b]	Soderberg spray scrubbers	80 to 90	40 to 50	1. Floating bed scrubber[c]	90	80 to 90
				2. Venturi scrubber followed by wet electrostatic precipitator	90	99
				3. Dry alumina scrubbers	99	96 to 99
Prebake	Multiclones	0	<60	1. Dry alumina scrubbers	99	96 to 98
	dry electrostatic		90			
	Spray scrubbers	80 to 90	40 to 50[d] <10[e]	2. Counterflow packed scrubber	90	95
VSS[f]	Soderberg multi-clones	0	<60	1. Scrubber plus wet electrostatic precipitator	99	96 to 98
	Spray scrubbers	80 to 90	40 to 50	2. Dry alumina scrubbers	99	99

[a]Gaseous and particulate fluorides.
[b]HSS = horizontal stud Soderberg.
[c]One section of bed employed.
[d]When used after multiclones.
[e]When used after electrostatic precipitator.
[f]VSS = vertical stud Soderberg.

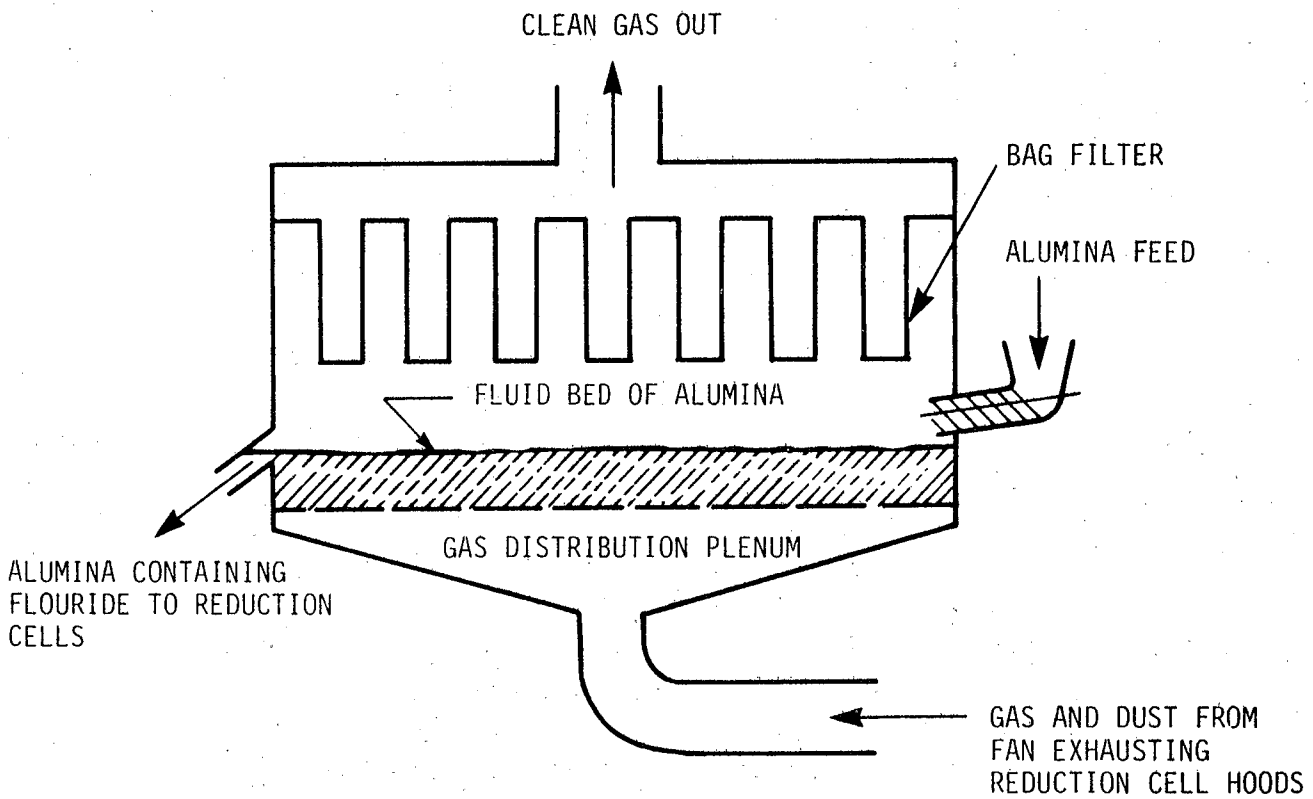

Figure 9.8.5-4 Schematic layout of Alcoa 398 process reactor.[10]

Industrial process fugitive emissions from materials handling can be controlled by standard techniques such as water spray, use of enclosures, and hooding/venting to particulate removal systems. The basic technique for controlling fugitive emissions from anode baking, reduction cell, and refining operations is to use adequate hooding/collection devices with increased exhaust flow rates that capture and direct the emissions to particulate control devices. In some cases, it may be more feasible to contain the particulate emissions in the building and vent the building exhaust through a control system.[7] A study to control exhaust emissions from a reduction cell building indicates that a wet scrubbing system can reduce building exhaust particulate emissions from 164 kg/h to 88 kg/h.[12]

9.8.5.3 Secondary Environmental Impacts. Table 9.8.5-7 presents a summary of energy consumption estimates for equipment designed to meet various pollution control levels applicable to various aluminum production unit processes. Two developments are currrently being evaluated which could reduce the energy requirements of the electrical reduction process and also the energy requirements for controlling air pollution from this operation. These developments involve the use of titanium dibromide cathodes in the present reduction cells and the use of a new electrical reduction process called the Alcoa Chloride Electrolysis Process. The Alcoa process has been described by Alcoa as offering the potential for producing aluminum with an energy savings of about 10 percent while maintaining operating costs at their present level. Both the Alcoa process and the use of titanium dibromide cathodes are expected to reduce air pollution from the reduction cells and from the anode production operations.

Table 9.8.5-7. SUMMARY OF IN-PLANT ENERGY CONSUMPTION PER TON OF ALUMINUM FOR POLLUTION CONTROL BY PLANT TYPE (kilowatt-hours/ton)[a]

Control level			Federal new source performance standards	
Unit process	1972: base year	State implementation plans	New plants[b]	Existing plants to achieve a 2 lb. TF/TAP[c]
CWPB				
Potroom	199.6	289.5	425.0	697.0
Bake plant	8.4	54.7	90.8	90.8
Paste plant	7.8	10.7	10.7	10.7
Rod room	3.3	3.3	3.3	3.3
Totals	219.1	358.2	529 .8	801.8
SWPB				
Potroom	211.6	419.8		530.0
Bake plant	16.3	16.8		18.4
Paste plant	7.8	10.7		10.7
Rod room	3.3	3.3		3.3
Totals	249.0	450.6		562.4
VSS				
Potroom	160.0	321.6		2633.0
Paste plant	7.8	10.7		10.7
Totals	167.8	332.3		2654.7
HSS				
Potroom	288.1	746.3		1091.0
Paste plant	7.8	10.7		10.7
Totals	295.9	757.0		1101.7

CODE: CWPB = Center-worked Prebake SWPB = Side-worked Prebake
VSS = Vertical Stud Soderberg HSS = Horizontal Stud Soderberg

[a]To convert from kilowatt-hours/ton to kilowatt-hours/Mg, multiply by 1.1.
[b]Energy requirements for a new center-worked prebake plant to achieve the New Source Performance Standard promulgated January 26, 1976.
[c]This scenario assumes existing plants will achieve a 2-pound total fluoride per ton of aluminum produced standard.

REFERENCES FOR SECTION 9.8.5

1. Field Surveillance and Enforcement Guide for Primary Metallurgical Industries. U.S. Environmental Protection Agency. EPA-450/3-73-002. December 1973.

2. OAQPS Data File of Nationwide Emissions. U.S. Environmental Protection Agency, Office of Air Quality Planning and Standards. Research Triangle Park, NC. February 1979.

3. Compilation of Air Pollution Emission Factors, Third Edition. U.S. Environmental Protection Agency, Office of Air Quality Planning and Standards. Research Triangle Park, NC. August 1977.

4. Background Information for Standards of Performance: Primary Aluminum Industry. Volume 1: Proposed Standards. U.S. Environmental Protection Agency. Publication No. EPA-450/2-74-020a. October 1974.

5. Air Pollution Control in the Primary Aluminum Industry, Volume II. Singmaster & Breyer. New York, NY. EPA Publication No. 450/3-73-004B. July 1973.

6. Vandegrift, A. E., et al. Particulate Pollutant System Study. Volume III: Handbook of Emission Properties. Midwest Research Institute. Kansas City, MO. Publication No. PB-203 522. May 1971.

7. Engineering and Cost Effectiveness Study of Fluoride Emissions Control, Volume 1. TRW Systems and Research Corp. Reston, VA. January 1972.

8. Technical Guidance for Control of Industrial Process Fugitive Particulate Emissions. U.S. Environmental Protection Agency. Publication No. EPA-450/3-77-010. March 1977.

9. Atmospheric Modeling Data from National Emission Data System (NEDS). U.S. Environmental Protection Agency, Office of Air Quality Planning and Standards. Research Triangle Park, NC. May 1979.

10. Parker, A. (ed.). Industrial Air Pollution Handbook. McGraw-Hill Book Company, Ltd. London, England. 1978.

11. Proceedings: Particulate Collection Problem Using ESPs in the Metallurgical Industry. Southern Research Institute. Birmingham, AL. Publication No. PB-274 017. October 1977.

12. Particulate and Fluoride Emissions Control. Anaconda Aluminum Company. Columbia Falls, MT. PEDCo-Environmental Specialists, Inc. Publication No. PB-255 241. February 1974.

9.8.6 Primary Copper Smelters

Pyrometallurgical smelting methods are utilized extensively in the United States to produce copper from sulfide ores. These ores usually contain less than 1 percent copper and therefore must be concentrated before being transported to the smelter. Concentration to 15 to 35 percent copper is accomplished by crushing, grinding, and flotation at the mine site. Sulfur content of the concentrate is generally 25 to 35 percent. Most of the remaining concentrate is iron (25 percent) and water (10 percent). Some concentrates also contain significant quantities of arsenic, cadmium, lead, boron, antimony, and other heavy metals.

Currently, there are 16 primary copper smelters operating in the United States. Of these, seven are located in Arizona, two in New Mexico, and one each in Nevada, Texas, Utah, Montana, Tennessee, Michigan, and Washington. The concentration of copper smelters in the Southwest is due mainly to the local availability of copper bearing ores. Domestic copper smelting capacity in 1976 totaled approximately 8.2 million Mg of charge, which is equivalent to about 1.85 million Mg of smelter product (99 percent "blister" copper).[1] Projected production for 1985 and 2000 is forecast at 1.82 and 2.86 million Mg of copper, respectively, which reflects an annual growth rate of 3.0 percent.

Particulate emissions from domestic primary copper smelting under existing controls were estimated to be 14.7 Gg in 1977.[2]

9.8.6.1 Process Description and Emissions. The pyrometallurgical process used for the extraction of copper from sulfide ore concentrates is based on copper's strong affinity for sulfur and its weak affinity for oxygen as compared to that of iron and other base metals in the ore. The purpose of smelting is to separate the copper from the iron, sulfur, and gangue materials. Conventional practice includes three operations:

- Roasting to remove a portion of the concentrate sulfur content.
- Smelting of the concentrate and fluxes in a furnace to form slag and copper-bearing matte.
- Oxidizing of the matte in a converter to form blister copper (about 99 percent pure copper).

Typically, the blister copper product is further refined in a fire-refining furnace prior to being cast into copper anodes and electrolytically refined. Figure 9.8.6-1 illustrates the basic smelting operations employed as well as the materials entering and leaving each operation.[3] Currently, half of the domestic smelters do not roast prior to smelting but instead charge wet or "green" feed directly to the smelting furnace.

In the roasting of copper sulfide ore concentrates, the concentrates are heated to a high temperature (but below the melting point of the constituents) in an oxidizing atmosphere to: (1) eliminate a portion (20 to 50 percent) of the sulfur contained as SO_2; (2) remove volatile impurities such as arsenic, antimony, and bismuth; and (3) preferentially convert a portion of the iron sulfides present to iron oxides. The roasted concentrate is called calcine. The degree of roast (i.e., the amount of sulfur and iron oxidized in the roasting operation) is dependent on the desired quality of the charge to the smelting furnace. Both multiple-hearth and fluidized-bed roasters are used.

For either type of roaster, there are three major operating variables: feed rate, combustion air flow rate, and temperature. A key difference between the two is the SO_2 concentration in the roaster off-gases; the concentration is considerably higher for fluidized-bed roasters than for multiple-hearth roasters due to the lower total air volume required. Average stack gas SO_2 concentration is about 12 percent, with maximums near 18 percent for fluidized-bed roasters and only 1.5 to 3 percent for existing multiple-hearth roasters.

In the smelting operation, hot calcines from the roaster or raw, unroasted concentrates are melted in a smelting furnace with limestone and siliceous flux. The copper and iron which are present in the charge combine with sulfur to form stable cuprous sulfide (Cu_2S) and stable ferrous sulfide (FeS). The combination of the two sulfides, known as matte, collects in the lower area of the furnace and is removed periodically for further processing. Such mattes may contain from 15 to 50 percent copper; 40 to 45 percent is the most common. The remainder of the molten mass, containing most of the other impurities and known as slag, is of lower specific gravity, and, therefore, floats on top of the matte from where it is drawn off and discarded.

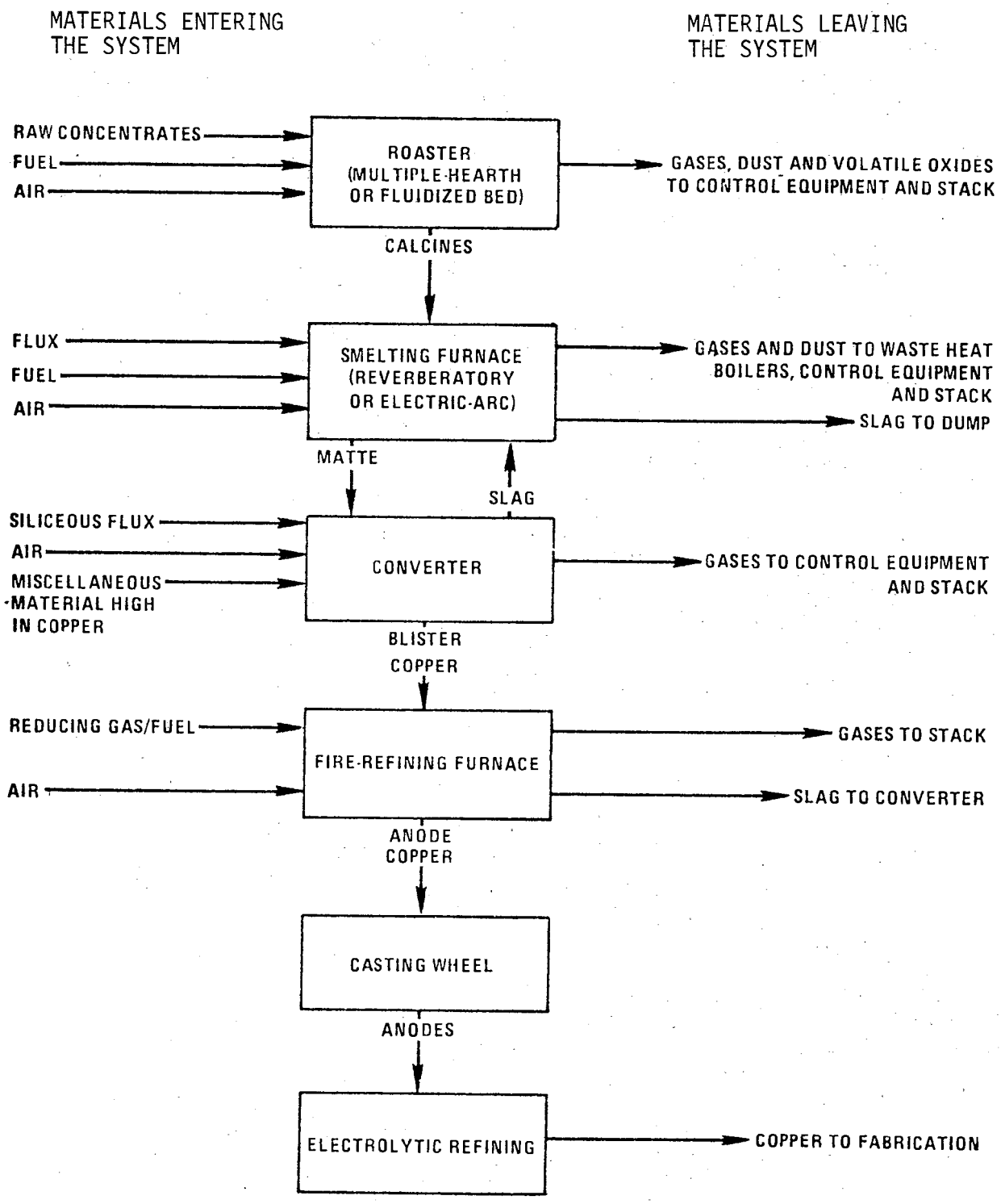

Figure 9.8.6-1 Typical primary copper smelter flowsheet.[3]

Currently, conventional reverberatory furnaces are used at 11 of the 16 existing primary copper smelters. Three smelters employ electric furnaces; one smelter employs the Outokumpu flash furnace; and another uses a Noranda continuous smelter.

In reverberatory furnace operation, heat is supplied by the combustion of oil, gas, or pulverized coal. The fuel is burned above the copper concentrates being smelted. Flames from the burners may extend half the length of the furnace. Part of the heat in the combustion gas radiates directly to the charge lying on the hearth below, while a substantial part radiates to the furnace roofs and walls and is reflected down to the charge. Combustion gases will contain from 15 to 45 percent of the sulfur in the original charge, depending primarily upon whether or not the concentrate was roasted. However, because of the high volume of combustion air, SO_2 concentrations are low, varying from 0.5 to 1.5 percent. These lean SO_2 mixtures, unlike off-gases from the roaters, converters, and other types of smelting furnaces, are not economically utilized as feed for sulfuric acid plants.

Electric smelting furnaces provide the heat necessary for smelting copper ore concentrates by placing carbon electrodes in contact with the molten bath within the furnace. The electrodes dip into the slag layer of the bath, forming an electrical circuit. When an electric current is passed through this circuit, the slag resists its passage, generating heat and producing smelting temperatures.

In flash smelting furnaces, roasting and smelting are combined in one operation to produce a high-grade copper matte (about 70 percent copper). The concentrates and fluxes are injected with preheated air, oxygen enriched air, or even pure oxygen, into a furnace of special design, and smelting temperatures are attained as a result of the heat released by the rapid, flash combustion of iron and sulfur.

The final step in the production of blister copper is converting. Converting is normally performed in a Pierce-Smith converter, which consists of a cylindrical steel shell mounted on trunnions at either end and rotated about its major axis. An opening in one side of the converter functions as a mouth through which molten matte, siliceous flux, and scrap copper are charged to the converter and gaseous products are vented. Air or oxygen-enriched air is blown into the bath through a series of openings called

tuyeres. During the initial blowing period (the slag blow), FeS in the matte is preferentially oxidized to FeO and Fe_3O_4, and sulfur is removed with the off-gases as SO_2. Flux is added to the converter to combine with iron oxide and form a fluid iron-silicate slag. When all the iron is oxidized, the slag is skimmed from the furnace, leaving behind "white metal" or molten Cu_2S. Fresh matte is charged into the converter at this stage and the slag blowing continued until a sufficient quantity of white metal has accumulated. When this happens, the white metal is oxidized with air to blister copper during the "copper blow." The blister copper is removed from the converter and then cast or subjected to additional fire refining prior to casting.

Cooling of the hot converter gases is necessary in order to prevent thermal damage to dry-gas cleaning equipment. Normally, this is accomplished by adding dilution air that can vary in volume from 1 to 4 times the converter off-gas. With dilution air, SO_2 concentrations in the converter off-gases can vary from 1 to 7 percent and typically average about 3.5 percent. With close fitting hoods or with Hoboken converters, the off-gases average 5 to 10 percent SO_2. However, when dilution air is not used, cooling devices such as waste heat boilers, air/gas heat exchangers, or water sprays are necessary.

Blister copper usually contains from 98.5 to 99.5 percent pure copper. Impurities may include gold, silver, antimony, arsenic, bismuth, iron, lead, nickel, selenium, sulfur, tellurium, and zinc. To purify the blister copper further, fire refining and electrolytic refining are used. In fire refining, air is blown through the metal to oxidize remaining impurities; these are removed as a slag, and the remaining metal bath is subjected to a reducing atmosphere to reconvert cuprous oxide to copper. The fire-refined copper is cast into anodes and further refined electrolytically.

Electrolytic refining involves separation of copper from impurities by electrolysis in a solution containing copper sulfate and sulfuric acid. Metallic impurities precipitate from the solution and form a sludge that is removed and treated for recovery of precious metals. The copper produced is 99.95 to 99.97 percent pure.

Actual emissions from a particular smelter unit depend upon the configuration of equipment in the smelting plant and the operating parameters

employed. Table 9.8.6-1 summarizes the emission factors for uncontrolled particulate emissions from major process units used in various smelter configurations.[4] Other potential emission sources, which have not been quantified, include ore crushing and preparation, flux crushing, ore storage, concentrate drying, slag dumping, fire refining, and copper casting. Significant quantities of fugitive emissions are also generated during material handling operations and charging and topping of furnaces.

As a general observation, particulate emissions from primary smelting operations are predominantly metallic fumes in the submicrometer size range.[5] A variety of particulate contaminants are typically emitted during the roasting process. They vary in composition depending on the particular ore being roasted. Copper and iron oxides are the primary constituents but other oxides such as those of arsenic, antimony, mercury, lead, cadmium, and zinc may also be present with metallic sulfates and sulfuric acid.[6] Combustion products from fuel burning also contribute to the emissions from roasters. The dust content of the waste gases is strongly influenced by the characteristics of the copper concentrates as well as the volume of air aspirated by the roasting furnaces.

Particulate emissions from reverberatory smelting furnaces contain significant amounts of copper, zinc, and sulfur, along with trace elements that correspond to the ore composition, including oxides of arsenic, antimony, aluminum, silicon, and sulfur (sulfates).[7] The amount of dust generated depends on the fineness of the furnace charge, the amount of charge agitation and the density of the charge material. Particle size distribution data from reverberatory smelting flue system exhaust are shown in Figure 9.8.6-2.[8] Another source reports particulate size characteristics from a reverberatory furnace at the inlet and outlet of an electrostatic precipitator control device. This information is presented in Figure 9.8.6-3.

Converter exhaust streams contain particulate matter composed of lead, antimony, arsenic, bismuth, selenium, tellurium, zinc, cadmium, and thallium. Particulate size distribution data from a converter exhaust flue are shown in Figure 9.8.6-4. Particulate emissions from fire refining are minimal, and atmospheric emissions from electrolytic refining are relatively minor.[9]

Table 9.8.6-1. EMISSION FACTORS FOR PRIMARY COPPER SMELTERS[a,b,4]

Smelter configuration	Unit	Control[c]	Particulates[d] lb/ton	Particulates[d] kg/MT
Reverberatory furnace followed by converters	Reverb.	None	36	18
		ESP	22	11
	Converter	None	42	21
		ESP	2.5	1.3
		ESP+SCAP	0.28	0.14
Multiple-hearth roaster followed by reverberatory furnace and converters	Roaster	None	45	22.5
		Baghouse	0.2	0.1
	Roaster and reverb.[d]	None		
		ESP	4.8	2.4
		Spray chamber + ESP	1.4	0.7
	Converter	None	42	21
		ESP	2.9	1.5
		ESP + SCAP	0.38	0.19
		ESP + SCAP	0.38	0.19
Fluidized-bed roaster followed by reverberatory furnace and converters	Roaster	None	55	28
		Baghouse + SCAP	0.1	0.05
	Reverb.	ESP	2.4	1.2
	Converter	ESP + SCAP	1.1	0.55
Fluidized-bed roaster followed by electric furnace and converters	Roaster	None	55	28
		Baghouse + SCAP	0.1	0.05
Total uncontrolled smelter		None	135	66.5

[a] Emission factors are expressed as units per unit weight of concentrated ore processed by the smelter. Approximately 4 unit weights of concentrate are required to produce 1 unit weight of copper metal.

[b] Other potential emission sources include (1) ore storage, crushing, and handling, (2) flux crushing and handling, (3) concentrate drying and handling, (4) slag dumping, (5) fire refining, and (6) copper casting. Emission rates have not been quantified, however.

[c] ESP = electrostatic precipitator
SCAP = single-contact acid plant
DCAP = double-contact acid plant.

[d] Roaster and reverberatory furnace emissions are combined and therefore a single set of emission factors is provided.

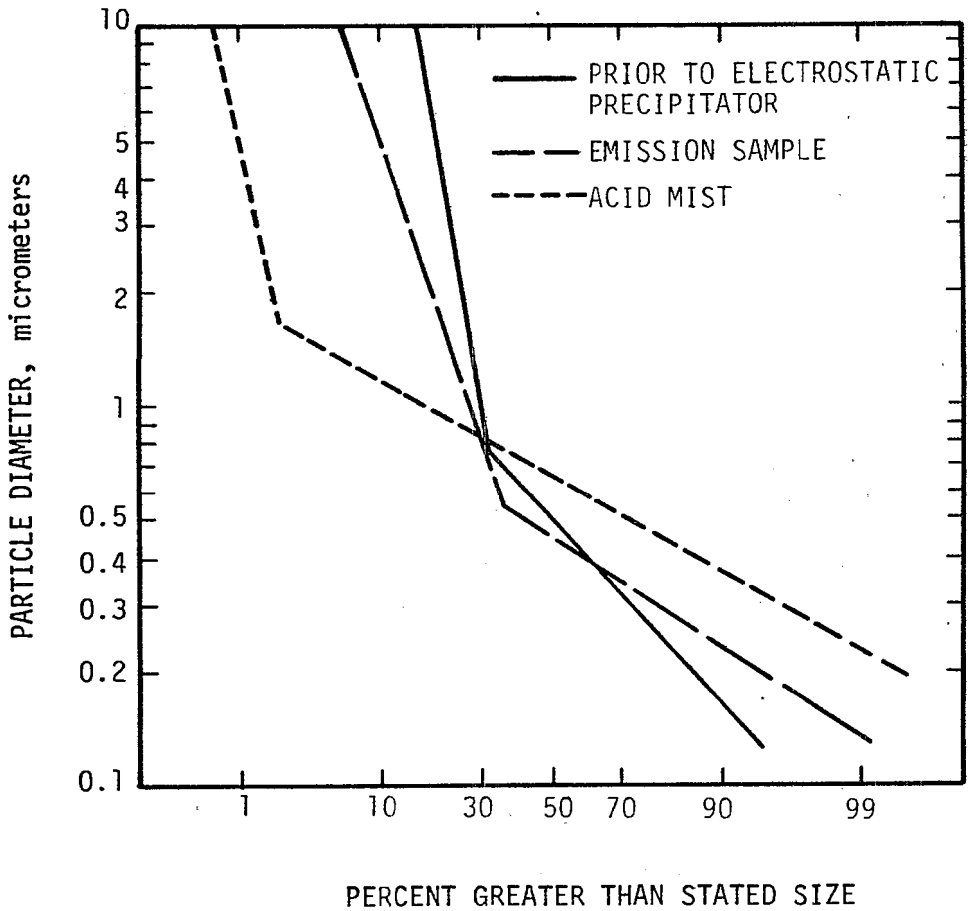

Figure 9.8.6-2 Reverberatory flue system particulate size distribution.[8]

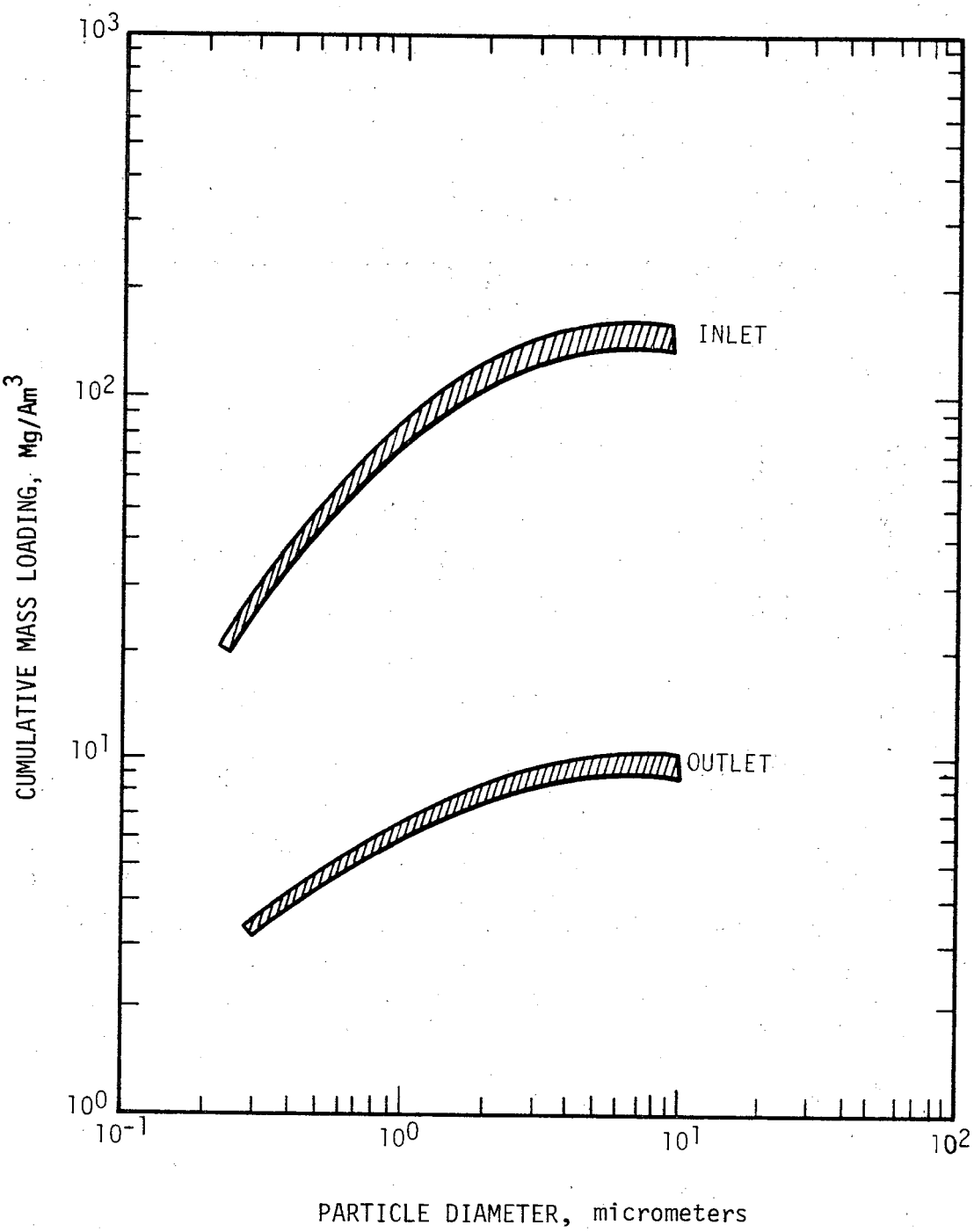

Figure 9.8.6-3 Average cumulative inlet and outlet mass loading vs. particle size, copper reverberatory furnace.[8]

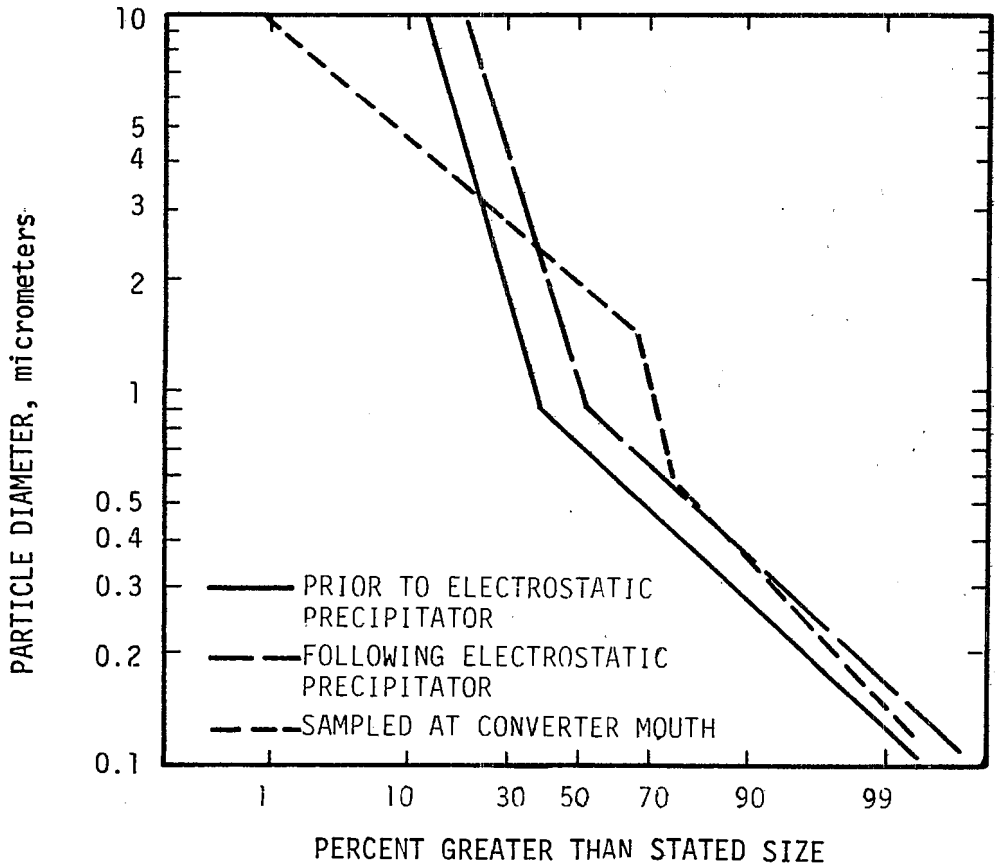

Figure 9.8.6-4 Converter flue system particulate size distribution.[8]

Fugitive particulates emitted from primary copper smelting consist basically of metallic oxides and dust. Major sources of fugitive emissions are ore concentrate unloading and handling, roaster calcine transfer operations, furnace tapping operations, and converter charging and skimming operations.[5]

9.8.6.2 Control Techniques. Control devices for particulate emissions from roasting, smelting, and converting operations include mechanical collectors (cyclones and settling flues), hot and cold electrostatic precipitators, fabric filters, and scrubbers. Electrostatic precipitators, usually preceded by mechanical collectors and operated at elevated temperatures, are by far the most commonly applied.

The control techniques actually applied vary, depending on smelter configuration, process equipment mix, emission characteristics, and feasibility for sulfur dioxide control. Off-gases from smelting equipment which produce relatively high concentrations of SO_2 (> 4 percent), including fluidized-bed roasters, non-reverberatory smelting furnaces, and converters, are generally treated in single- or double-contact sulfuric acid plants for SO_2 removal. The presence of solid and gaseous contaminants such as acid mist, entrained dust, and metal fumes in these off-gases can present serious difficulties in the operation of an acid plant. The major difficulties caused by these contaminants include the corrosion of heat exchanger tubes, plugging of catalytic beds, deactivation of the catalyst, and contamination of the product acid. As a result, rather extensive measures are taken to remove these contaminants to ensure that their concentrations are reduced to tolerable levels prior to entering the acid plant for sulfuric acid production.

Both hot and cold gas cleaning devices are used. Generally, the off-gases are initially treated in a hot electrostatic precipitator, where the coarse particulates, which contain high metal values, are removed. The gases exiting the precipitator are then scrubbed in one or more packed-bed or impingement type scrubbers, where, in addition to undergoing further particulate removal, the gases are humidified and cooled. The cooled gases then enter a series of electrostatic mist precipitators, where acid mist, fine particulate, and volatile metals are removed prior to entering the acid plant. If more elaborate cleaning is required, venturi type scrubbers are used upstream of the cooling towers. Although complete removal

of contaminants such as arsenic from the off-gases is not practical, 99+ percent removal is considered achievable.

The off-gas streams produced by existing multiple-hearth roasters and reverberatory smelting furnaces are generally considered too lean in SO_2 concentration for the economic recovery of SO_2 using sulfuric acid plants. However, the control of particulate matter emitted from these process facilities is standard practice because of the value of the copper contained in the dust and the presence in some instances of significant quantities of potentially hazardous substances such as arsenic. Typically, reverberatory furnace off-gases exit the furnace and pass through one or more waste heat boilers, where the gas stream is cooled to about 370°C (700°F) and a significant portion of the heat is recovered for power generation. Generally, the gases then pass through a large rectangular flue (balloon flue), where the gas velocity is reduced sufficiently to allow the coarser particles (larger than 40) to fall out prior to entering an electrostatic precipitator for fine particulate removal. The electrostatic precipitators used are generally operated at temperatures ranging from 200°C to 315°C (400°F to 600°F). Design efficiencies normally range from 95 to 99 percent. Excluding the waste heat recovery step, particulate emissions from multiple-hearth roasters are treated similarly.

Table 9.8.6-2 presents performance data obtained using in-stack filter measurements on a dry electrostatic precipitator used to control particulate emissions from a typical "green" charge reverberatory smelting furnace.[10] The precipitator is designed to handle 4,250 actual m^3/min (150,000 SCFM) at 315°C (600°F) and has a total collection area of 3,860 m^2 (40,500 ft^2). Simultaneous inlet and outlet measurements were conducted using in-stack filters. As the data indicate, the overall collection efficiency measured was about 96 percent. It should be noted, however, that while the subject precipitator is reasonably effective in removing material that exists as particulate at its operating temperature, any volatile materials, such as metal oxides of arsenic or selenium that exist in the vapor state at the precipitator operating temperature, would pass through the precipitator with little or no removal. Measurements conducted on the same precipitator specifically for arsenic (As_2O_3) showed an arsenic collection

Table 9.8.6-2. REVERBERATORY FURNACE ESP PERFORMANCE DATA[a,10]

Sample run	Mass concentration, g/dscm (gr/dscf) Inlet	Outlet	Efficiency (%)
1	0.156 (0.358)	0.008 (0.018)	95.0
2	0.283 (0.647)	0.007 (0.017)	97.4
3	0.283 (0.647)	0.008 (0.019)	97.1
4	0.189 (0.433)	0.010 (0.022)	94.9
5	0.184 (0.422)	0.011 (0.025)	94.1
Average	0.219 (0.501)	0.009 (0.020)	95.7

[a]Based on in-stack filter measurements.

efficiency of less than 30 percent. As a result, particulate controls applied at smelting facilities that process materials containing high levels of volatile impurities should employ precooling as an integral part of the overall control system. The gas stream to be treated should be cooled to a sufficiently low temperature, and adequate time should be allowed to ensure that the bulk of the volatile constituents present in the gas stream are condensed prior to entering the control device for collection.

Methods commonly applied in the nonferrous metal industry for cooling hot gas streams include radiative cooling towers, water spray chambers, and dilution with ambient air. All three methods have advantages and disadvantages. Although cooling with dilution air is the simplest alternative, its application for the gas volumes and temperatures under consideration may not be economical. Depending on the temperature of the gas stream to be treated, the amount of dilution air needed to effect cooling could result in a two- to four-fold increase in the total gas volume to be treated, with a corresponding increase in the size and cost of the control device applied and overall fan requirements.

Radiative cooling towers require considerable space because of their need for sufficient heat transfer area. In addition, horsepower requirements are high due to the increased resistance to gas flow resulting from the added ductwork needed. The major drawback to radiative cooling, however, is its limited flexibility for temperature control. Because the temperature of the gas stream exiting the cooling tower is dependent only on the temperature and volume of the inlet gas stream and the ambient air temperature, any variation in either of these will result in a lower or higher outlet temperature than intended.

Cooling hot gases by evaporative cooling is relatively simple and requires little space. Water spray chambers are currently used at a number of copper smelters for cooling process gases from a variety of sources prior to the entry of the process gases into an electrostatic precipitator or baghouse for particulate removal. Typically, the spray chambers used have a cross-sectional area of about 35 m^2 (375 ft^2) and are 30 to 60 meters (100 to 200 feet) in length. The large cross-sectional area results in a low flow velocity which allows for a longer residence time. Water is introduced

through a series of sprays along the cross-section of the chamber. Water requirements will vary depending on the temperature of the stream to be cooled and the desired end temperature.

The major difficulty with applying water spray chambers for cooling smelter off-gases is the potential for corrosion. The presence of moisture and sulfur oxides in the smelter off-gases introduces a lower temperature constraint under which further cooling cannot be tolerated without incurring severe operating problems. Because SO_3 is hygroscopic, it will absorb moisture at temperatures well above the moisture dew point and form sulfuric acid mist which is highly corrosive. The temperature at which this acid mist formation occurs (acid dew point) is highly variable, depending on the SO_3 concentration present as well as other gas stream characteristics. Continued operation of a dry control device at or below the acid dew point could result in a severe corrosion problem due to acid attack. Thus, it is generally recommended that the operating temperature of a dry control device be maintained 10°C to 25°C above the best estimate of the acid dew point. Little data are available on the acid dew point of smelter off-gases. However, practical experience at two smelters indicates that an operating temperature of 110°C (230°F) is certainly within tolerable limits.

Performance data obtained on a spray chamber/electrostatic precipitator used to control the combined off-gases from four multiple-hearth roasters and a reverberatory smelting furnace are presented in Table 9.8.6-3.[11] The combined gas stream, which averages about 5100 Nm^3/min (180,000 SCFM), enters the spray chamber, where it is cooled from about 220°C (428°F) to less than 115°C (240°F) prior to entering the electrostatic precipitator for particulate removal. The precipitator consists of seven parallel chambers, each containing four sections. Simultaneous inlet and outlet mass particulate measurements were conducted using out-of-stack filters (EPA Method 5). As the data indicate, a collection efficiency of greater than 96 percent was achieved.

Similar performance data are presented in Table 9.8.6-4 for a spray chamber/baghouse used to control particulate emissions from a fluidized-bed roaster, electric smelting furnace, and several converters.[12] The collection system consists of a baghouse preceded by two parallel spray chambers which

TABLE 9.8.6-3 PERFORMANCE DATA FOR SPRAY CHAMBER/ESP[a,11]

Sample run	Inlet (g/dscm)	Inlet (kg/hr)	Outlet (g/dscm)	Outlet (kg/hr)	Efficiency (%)
1	4.53	1019	0.112	40.7	96.0
2	5.65	1233	0.085	33.6	97.3
Average	5.10	1126	0.098	37.1	96.7

[a]EPA Method 5 (front-half only).

Table 9.8.6-4. PERFORMANCE DATA FOR SPRAY CHAMBER/BAGHOUSE[a,12]

Sample run	Inlet (g/dscm)	Inlet (kg/hr)	Outlet (g/dscm)	Outlet (kg/hr)	Efficiency (%)
1	14.74	4060	0.050	14.6	99.6
2	13.64	3743	0.037	10.0	99.7
3	14.05	3819	0.053	14.6	99.6
Average	14.14	3868	0.046	13.1	99.7

[a]EPA Method 5 (front-half only).

effectively cool the inlet gas stream from about 315°C (600°F) to less than 110°C (230°F) prior to entering the baghouse. The baghouse, which consists of 18 compartments, each equipped with 240 Orlon bags, has a net collection area of 29,800 m^2. It is designed to treat 5,664 Nm^3/min (200,000 SCFM) effectively at an air-to-cloth ratio of 0.38 m^3/m^2 (1.25 ft^3/ft^2). Bag cleaning is effected by mechanical shakers. As shown, the collection efficiency achieved was greater than 99.5 percent.

In both of the above cases, the smelter charge contained high levels of volatile impurities, especially arsenic.

Fugitive emissions produced by the majority of smelter fugitive sources, including ore concentrate handling, calcine transfer, and furnace tapping (matte and slag), are readily controllable by hooding and enclosing the fugitive emission points and exhausting the captured emissions to a control device for collection. Fugitive emissions associated with converter operations are much more difficult to control. These emissions are substantial and occur during charging, skimming, or pouring operations when the converter mouth is rotated out from under the primary hood. Control techniques which have been applied include the use of secondary mechanical hoods in various design and converter building evacuation (general ventilation).

REFERENCES FOR SECTION 9.8.6

1. Schroeder, H. J. Copper - 1977. U.S. Department of the Interior, Bureau of Mines. 1977. p.2.

2. OAQPS Data File of National Emissions. U.S. Environmental Protection Agency, Office of Air Quality Planning and Standards. Research Triangle Park, NC. February 1979.

3. Compilation of Air Pollutant Emission Factors - Supplement No. 8. U.S. Environmental Protection Agency. Publication No. AP-42. May 1978. p. 7.3-2.

4. Reference 3, p. 7.3-5.

5. Controlled and Uncontrolled Emission Rates and Applicable Limitations for Eighty Processes. The Research Corporation of New England. Wethersfield, CN. Publication No. PB-266 978. September 1976.

6. Hardison, L. C., and C. A. Greathouse. Air Pollution Control Technology and Costs in Nine Selected Areas. Industrial Gas Cleaning Institute, Inc. Publication No. PB-22 746. September 1970.

7. Vandergrift, A. E., et al. Particulate Pollutant System Study, Volume III: Handbook of Emission Properties. Midwest Research Institute. Kansas City, MO. Publication No. PB-203 522. May 1971.

8. Proceedings: Particulate Collection Problems Using ESPs in the Metallurgy Industry. U.S. Environmental Protection Agency. Publication No. EPA-600/2-77-208. July 1976.

9. Trace Pollutant Emissions from the Processing of Metallic Ores. PEDCo-Environmental Specialists, Inc. Publication No. PB-238 655. October 1974.

10. Schwitzgebel, K., R. T. Coleman, R. V. Collins, R. M. Mann, and C. M. Thompson. Trace Element Study at a Primary Copper Smelter, Prepublication copy. Radian Corportion. Austin, TX. EPA Contract No. 68-01-4136. January 1978.

11. Emission Test Report - ASARCO, Incorporated. El Paso, Texas. Prepared by Monsanto Research Corporation. Dayton, OH. EMB Report No. 77-CU-6. June 1977.

12. Emission Test Report - Anaconda Copper Company. Anaconda, MT. Prepared by Monsanto Research Corporation. Dayton, OH. EMB Report No. 77-CUS-5. August 1977.

9.8.7 Primary Lead Smelting

Primary lead smelting entails the recovery of metallic lead from lead ore concentrates. Raw lead ore frequently contains large amounts of zinc as well as a number of other metals including cadmium, antimony, copper, and silver. Normally, the lead- and zinc-containing ores are separated and concentrated for processing and recovery at lead and zinc smelters.

There are six primary lead smelters in the United States, and production from these smelters was estimated to be 612 Gg in 1976.[1] Considerable amounts of lead are also imported into the United States.

Primary lead production in the United States involves three basic operations: (1) sintering of ore concentrate, (2) processing of the sintered material in a blast furnace to produce lead bullion, and (3) refining of lead bullion to produce specification lead and lead alloys that are used in a variety of products. In 1971, a total of 1.3 Tg of lead was consumed; 47 percent of this lead was used in the manufacture of lead acid batteries.[2]

Lead consumption appears to be stable for the near term. Therefore, it is not expected that any new smelters will be constructed in the immediate future.[2] One source estimates an anticipated annual growth of about 2 percent, while qualifying this with the observation that environmental and economic considerations and changing use patterns could have a major impact on demand rates.[3]

Particulate emissions from sintering machine, blast furnace, and reverberatory furnace operations were estimated at 3260 Mg for 1977.[4]

9.8.7.1 Process Description and Emissions. The lead contained in lead ore is found primarily as lead sulfide. Lead compounds are separated from zinc compounds which frequently are combined in natural ore. The lead compounds are concentrated and sent to a smelting facility for processing into metallic lead.

A simple schematic of the primary lead smelting process is shown in Figure 9.8.7-1.[5] The initial sintering process has two basic purposes: (1) to produce a lead oxide material by driving off the sulfur in the form of sulfur dioxide, and (2) to produce a material with the dense permeable properties needed for processing in the blast furnace. The sintering reaction is autogenous and creates temperatures of about 540°C. Up to

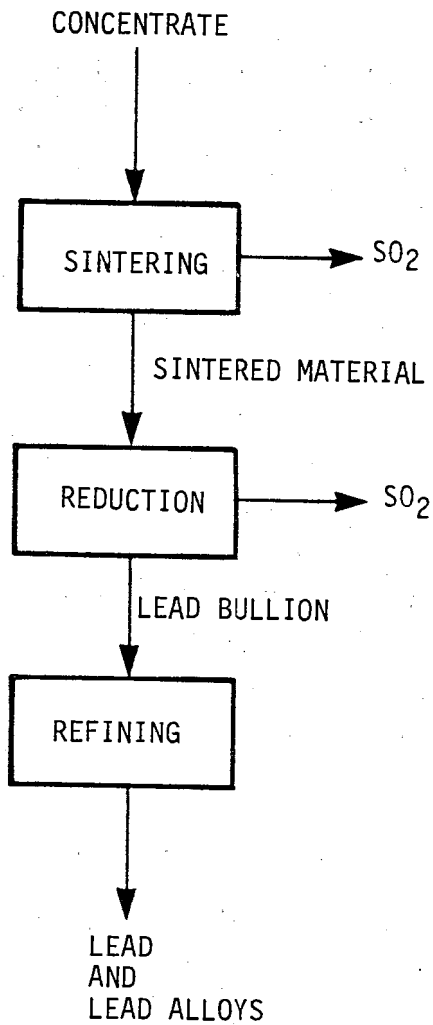

Figure 9.8.7-1 Primary lead smelting process.[5]

20 percent of the sinter feed material (including ore concentrates, coke, and fluxes) can be emitted as dust and fumes. Economics require that much of this material be captured and recycled.[6]

The sintered material, containing lead oxide and some sulfur not removed during the sintering process, is mixed with coke and other materials and charged into a blast furnace in which the lead oxide is reduced to produce metallic lead (lead bullion). A schematic of a lead blast furnace is shown in Figure 9.8.7-2. Particulate material emitted from the blast furnace can contain up to 65 percent lead as well as cadmium and arsenic. Therefore, much of this material is captured and recycled back to the sintering process.[7]

The lead bullion and slag material are discharged from the base of the blast furnace. The slag material (which is less dense than the lead bullion) is separated by gravity, collected continually from the furnace, and either treated in the smelter or shipped to other facilities to recover the metal content (such as zinc, copper, and antimony). The lead bullion is then transferred to refining kettles. Slag that is high in zinc may be treated in a fuming furnace to recover zinc oxide.

Drosses that contain impurities are formed in the refining kettles and then selectively skimmed to remove impurities from the lead and to bring the lead into the desired specification limits for antimony, tin, arsenic, and other elements. Zinc may be removed by applying a vacuum to the kettle and removing the zinc fume. The drosses are then treated in a reverberatory furnace to recover the lead and other metals removed in the refining kettle drossing operation.

Emission factors for uncontrolled emissions from primary lead smelting processes are presented in Table 9.8.7-1.[8] The particulate emissions from the sintering machine consist primarily of lead and zinc compounds, with traces of oxides of such elements as arsenic, cadmium, selenium, and tellurium. The size distribution of flue dust from a sintering machine is shown in Table 9.8.7-2. Particulate material emitted from the blast furnace typically contains lead oxides, zinc oxide, cadmium oxide, quartz, limestone, iron pyrites, iron-lime-silicate slag, arsenic compounds, and other compounds containing metals associated with lead ores.[7]

The metallic fume emissions from primary lead production are generally

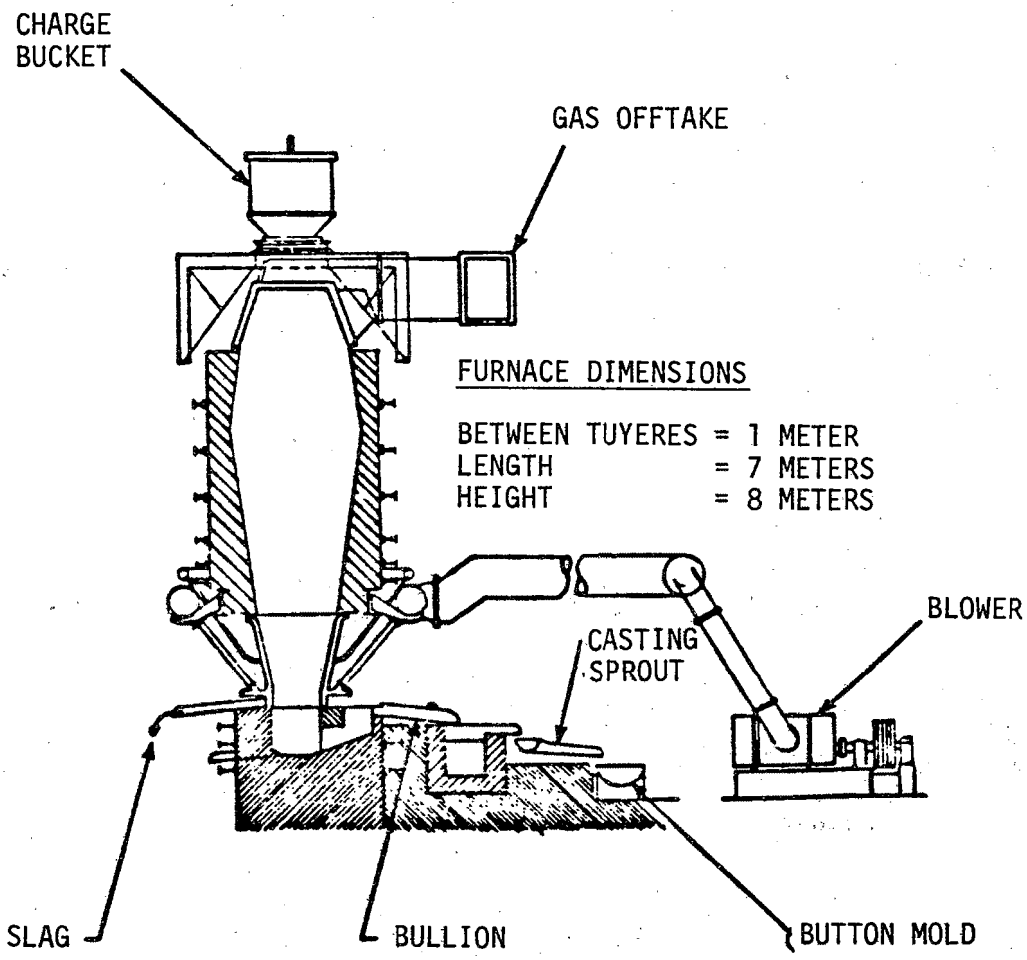

Figure 9.8.7-2 Lead blast furnace.[4]

TABLE 9.8.7-1. EMISSION FACTORS FOR PRIMARY LEAD SMELTING PROCESSES WITHOUT CONTROLS[a,8]

Process	Particulates		Sulfur dioxide	
	kg/MT	lb/ton	kg/MT	lb/ton
Sintering (updraft)	106.5	213.0	275.0	550.0
Blast furnace	180.5	361.0	22.5	45.0
Dross reverberatory furnace	10.0	20.0	Neg	Neg
Materials handling	2.5	5.0	-	-

[a]Emission factors expressed as kg/MT (lb/ton) of lead product.

Table 9.8.7-2. SINTERING MACHINE FLUE DUST SIZE DISTRIBUTION[5]

Size, micrometers	Percent by weight
20 to 40	15 to 45
10 to 20	9 to 30
5 to 10	4 to 19
5	1 to 10

submicrometer in size. Fumes from lead sintering can contain lead, antimony, zinc, cadmium, germanium, selenium, tellurium, indium, thallium, chlorine, fluorine, and arsenic. Fumes from blast furnace operations contain essentially the same materials as that from sintering, with the following representative concentrations of trace metals: 0.01 to 1 parts per million each of cadmium, manganese, nickel, tin, and vanadium; 0.01 to 0.1 ppm of copper; 1.0 to 10 ppm of magnesium; and 0.1 to 100 ppm of lead.[9]

Fugitive emissions from lead smelting operations can be significant. The greatest amounts result from the handling and recharging of recovered sinter materials into the sintering machine. Other significant fugitive emission sources are lead ore concentrate handling and transfer facilities, zinc fuming furnace vents, and reverberatory and blast furnace leakage and tapping operations. Particulate fugitive emissions from the blast furnace consist primarily of lead oxides of which 92 percent are less than 4 micrometers.[5] Concentrations of lead, cadmium, and zinc in fugitive particulate emissions from several primary lead smelting operations are shown in Table 9.8.7-3.

9.8.7.2 Control Techniques. Fabric filters and electrostatic precipitators are the most commonly used particulate emissions control systems in the primary lead smelting industry. Fabric filters are used for particulate emissions control on all of the blast furnaces and five of the six sintering machines found in domestic primary lead smelting plants. The sixth sintering operation employs an electrostatic precipitator. In many cases, the blast furnace and dross reverberatory furnace are served by the same fabric filter.[2,10]

A fabric filter is normally chosen only when the SO_3 concentration in the flue gas is low since high SO_3 concentrations can corrode fabric filter structures and deteriorate the filter fabric.[2]

Large dust and some fume particulates from sintering machines are removed from flue gas by gravitational settling in large flues or chambers prior to flue gas entry into an ESP or fabric filter. Blast furnace particulate matter may be collected in fabric filter units with wool or fiberglass bags.[7] The results of emission tests on fabric filters applied to primary lead sintering machines and blast furnaces are given in Tables 9.8.7-4 and 9.8.7-5.

Table 9.8.7-3. CONCENTRATIONS OF LEAD, CADMIUM, AND ZINC IN FUGITIVE PARTICULATE EMISSIONS OF VARIOUS PRIMARY LEAD SMELTING OPERATIONS' EMISSIONS SOURCES[5]

	Percent by weight		
Operations' emissions sources	Lead	Cadmium	Zinc
Ore concentrate storage	37	0.8	8
Return sinter transfer	19	0.6	2
Sinter sizing and storage	58	0.7	5
Sinter product dump area	31	0.6	6
Sinter transfer to blast furnace	39	0.7	6
Blast furnace roof vents	47	0.4	8
Blast furnace upset	27	4.0	7
Lead refinery roof vents	37	0.3	19
Lead casting roof ducts	38	0.1	18
Zinc fuming furnace area	3	--	62

Table 9.8.7-4. PRIMARY LEAD SMELTERS--SINTERING MACHINE BAGHOUSE TEST DATA[10]

Parameter	Test data								
Fabric filter type	Shaker	Shaker	Shaker	Shaker	Shaker	Shaker	Shaker	Shaker	Shaker
Fabric	--	Acrylic	--	Polyester	--	--	Wool	Acrylic	Acrylic
Temperature, °C	93	102	127	116	93 32.9	93 8.1	71 29.3	71 29.3	65 10.0
A/C ratio	20.1	20.1	32.9	31.9	5.1	6.4	8.9	8.9	5.1
ΔP, kPa	--	0.84	1.00	--	0.45	--	0.25	0.58	0.20
Inlet, g/Nm^3	4.6	3.2	4.8	--	0.11	--	0.02	0.01	--
Outlet, g/Nm^3	--	0.002	0.007	--	--	--	--	--	--
Cooling	--	Water spray	Water spray	--	--	Infilt.	--	Water sprays	Infilt., water sprays
SO_2, %	5.5	--	--	5.0	0.1	--	--	--	--
Bag life, months	--	36+	23+	--	30	--	53	40	56
Dust removal	Screw conv.	Cellars	Cellars	Screw conv.	Screw conv.	Cellars	Cellars	Cellars	Cellars

Table 9.8.7-5. LEAD SMELTERS--BLAST FURNACE BAGHOUSE TEST DATA[10]

Parameter	Test data					
Fabric filter type	Shaker	Shaker	Shaker	Shaker	Shaker	Shaker
Fabric	--	--	Wool	Acrylic	Acrylic	Acrylic
Temperature, °C	93	93	71	71	65	--
A/C ratio	32.9	8.1	29.3	29.3	10.0	23.8
ΔP, kPa	0.50	0.63	0.87	0.87	0.50	0.87
Inlet, g/Nm^3	4.6	--	2.5	5.9	2.0	2.8
Outlet, g/Nm^3	0.11	--	0.02	0.01	--	0.022
Cooling	--	Infilt.	--	Water sprays	Infilt., water sprays	--
SO_2, %	0.1	--	--	--	--	--
Bag life, months	30	--	53	40	56	--
Dust removal	Screw conv.	Cellars	Cellars	Cellars	Cellars	Screw conv.

Fugitive emissions derive from a variety of operations and processes; consequently, their control requires measures applicable to each source. Fugitive emissions from sintering operations and reverberatory furnaces can be controlled through proper operating and maintenance procedures such as not using excessive fuel and maintaining equipment. Ore handling and transfer fugitive emissions can be controlled by using water sprays and confining emissions by enclosure. Zinc fuming furnace and blast furnace fugitive emissions can be effectively controlled via adequate hooding and ventilation to a fabric filter.[5]

New Source Performance Standards for primary lead smelting process facilities (promulgated on January 15, 1976) limit particulate emissions from blast furnaces, dross reverberatory furnaces, and sintering machine discharge ends to 50 mg/dscm (0.022 gr/dscf). Sulfur dioxide emissions from sintering machines are limited to 0.065 percent by volume (650 ppm).

REFERENCES FOR SECTION 9.8.7

1. Background Information for New Source Performance Standards: Primary Copper, Zinc, and Lead Smelters, Volume I: Proposed Standards. U.S. Environmental Protection Agency. Publication No. EPA-450/1-74-002a. 1974.

2. Assessment of Fugitive Particulate Emission Factors for Industrial Processes. U.S. Environmental Protection Agency. Publication No. EPA-450/3-78-107. 1978.

3. Atmospheric Modeling Data from Material Emission Data System (NEDS). U.S. Environmental Protection Agency. May 1979.

4. Field Surveillance and Enforcement Guide for Primary Metallurgical Industries. U.S. Environmental Protection Agency. Publication No. EPA-450/3-73-002.

5. Technical Guidance for Control of Industrial Process Fugitive Particulate Emissions. U.S. Environmental Protection Agency. Publication No. EPA-450/3-77-010. March 1977.

6. Weisburg, M. I. Field Operations and Enforcement Manual for Air Pollution Control, Volume III: Inspection Procedures for Specific Industries. Pacific Environmental Services, Inc. Elmhurst, IL. Publication No. APTD 1102. August 1972.

7. Vandegrift, A. E., et al. Particulate Pollutant System Study, Volume III: Handbook of Emission Properties. Midwest Research Institute. Kansas City, MO. Publication No. PB-203-522. May 1971.

8. Compilation of Air Pollutant Emission Factors. U.S. Environmental Protection Agency. Publication No. AP-42. August 1977.

9. Trace Pollutant Emissions from the Processing of Metallic Ores. PEDCo-Environmental Specialists, Inc. Cincinnati, OH. Publication No. PB-238-655. October 1974.

10. Caplan, K. J. Applications of Baghouses in Lead and Zinc Smelters. In: Control of Particulate Emissions in the Primary Nonferrous Metals Industries. U.S. Environmental Protection Agency. March 1979.

9.8.8 Primary Zinc Smelting

Primary zinc smelting entails the recovery of zinc from zinc ore concentrates and from zinc containing slag produced from lead blast furnaces.

Primary zinc production in the United States uses either a pyrometallurgical or an electrolytic extraction process. The pyrometallurgical process involves three basic operations: roasting the zinc ore concentrates, sintering the roasted ore, and reducing the sinter material to produce metallic zinc. The electrolytic process involves roasting the zinc ore concentrates, followed by chemical leaching and electrolytic extraction of metallic zinc.

Between 1968 and 1971, a number of domestic primary zinc producers ceased operation, reducing the estimated domestic zinc production capacity from 1210 Gg in 1968 to 695 Gg in 1972.[1] Table 9.8.8-1 shows the industry structure as it changed between 1968 and 1972.[2,3] Domestic primary zinc production in 1976 was estimated to be approximately 680 Gg.[4] The domestic consumption of slab zinc is given in Table 9.8.8-2. The supply sources of slab zinc are shown in Table 9.8.8-3.

Even though increased importation of foreign slab zinc is expected, it is also anticipated that at least one new domestic smelter will be built.[1] One source estimates that the demand for zinc will increase at an average of between 1 to 3 percent per annum.[5]

Particulate emissions from roasting, sintering, and retort furnace operations were estimated at 1270 Mg for 1977.[6]

9.8.8.1 Process Description and Emissions. The zinc contained in zinc ore is found primarily as zinc sulfide (ZnS), also called sphalerite. The zinc-containing ore usually has impurities such as lead, cadmium, and minor amounts of other trace elements. The zinc compounds are separated, concentrated, and then sent to a smelting facility for processing into zinc oxide or metallic zinc. Zinc oxide may also be recovered as a by-product in the primary lead smelting process when slag from the lead blast furnace is treated in a fuming furnace.

Zinc is recovered in domestic smelters by using either the pyrometallurgical or the electrolytic process. Simple schematics of these two

Table 9.8.8-1. DOMESTIC SLAB ZINC CAPACITY 1968-1972[2,3]

Company/smelter location	Estimated capacity, Gg 1968	1972
Asarco, Amarillo, Texas	50	50
Asarco, Corpus Christi, Texas	98	98
Blackwell Zinc, Blackwell, Oklahoma	80	80
National Zinc, Bartlesville, Oklahoma	57	57
New Jersey Zinc, Palmerton, Pennsylvania	107	107
St. Joe Minerals, Monaca, Pennsylvania	204	204
Bunker Hill, Kellogg, Idaho	99	99
American Zinc, Dumas, Texas	53	--
American Zinc, Sauget, Illinois	76	--
Eagle Picher, Henryetta, Oklahoma	50	--
New Jersey Zinc, Depue, Illinois	63.5	--
Mathiessen & Hegler, Meadowbrook, W. Virginia	41	--
Anaconda, Great Falls, Montana	147	--
Anaconda, Anaconda, Montana	82	--
Totals	1207.5	695

Table 9.8.8-2. DOMESTIC SLAB ZINC CONSUMPTION (Gg)[2,4]

Consumption	1969	1970	1971
Galvanizing	447	430	431
Biassay	162	116	136
Other alloys	522	421	468
Other	124	110	102
Totals	1255	1077	1137

Table 9.8.8-3. SUPPLY OF SLAB ZINC BY SOURCE (Gg)[1,3]

Source	1969	1970	1971
Domestic ores	420	405	370
Foreign concentrates	528	430	340
Scrap	64	70	70
Subtotal domestic production	1012	905	780
Slab imports	298	236	294
Total slab zinc supplied for domestic consumption, exports, and stocks	1310	1141	1074

processes are shown in Figures 9.8.8-1 and 9.8.8-2. Emission factors for uncontrolled particulate emissions from primary zinc smelting operations are presented in Table 9.8.8-4.[7]

Ore roasting is done in both production processes. The roasting is an exothermic reaction during which sulfur is removed from the zinc ore in the form of SO_2, and the zinc is oxidized to form a ZnO calcine material. Production and emission data for typical roasting operations and various roaster types are found in Table 9.8.8-5.[8] Typical components of flue dust from roasters are shown in Table 9.8.8-6.[9] Uncontrolled emissions are estimated at 120 lb/ton of concentrate processed.

For the pyrometallurgical process, after roasting, the calcine is processed in a sintering machine. Sintering eliminates any remaining sulfur, volatilizes lead and cadmium, and forms a dense permeable material suitable for feeding to a reduction furnace. Uncontrolled emissions are estimated at 90 lb/ton of concentrate processed. The composition of particulate material emitted by the sintering process is reported to be 5 to 25 percent Zn, 30 to 50 percent Pb, 2 to 15 percent Cd, and 8 to 13 percent S; and the particulate emissions are reported to be less than 10 micrometers in size.

For the pyrometallurgical reduction operations, three reduction furnace systems can be used. These systems are the horizontal retort furnace, the vertical retort furnace, and the electrothermic furnace. These reduction systems can use scrap zinc material as feed; 30 percent of the recycled or secondary zinc production in 1972 occurred at primary pyrometallurgical smelters.[4]

The basic reactions that takes place in reduction furnaces are as follows:

$$ZnO + CO \longrightarrow Zn\ (vapor) + CO_2$$
$$CO_2 + C \longrightarrow 2\ CO.$$

Carbon reduction material is supplied either as coke or coal, which is mixed with the sintered ZnO and charged into the reduction furnace. The flue gas from reduction furnaces contains particulate matter that ranges in size from micrometer to submicrometer and normally consists of 50 to 70

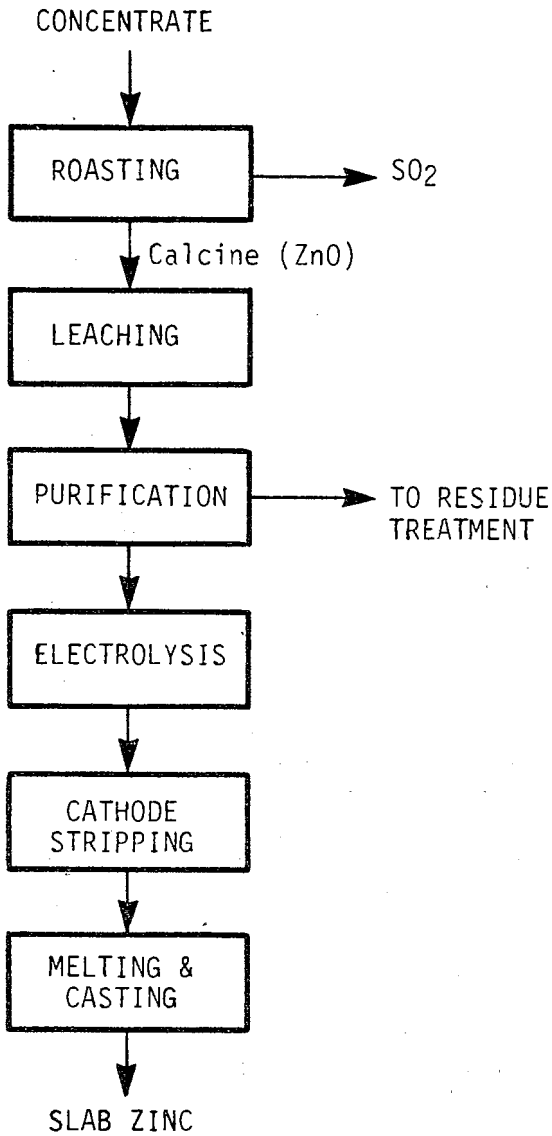

Figure 9.8.8-1 Primary pyrometallurgical zinc smelting process.[1]

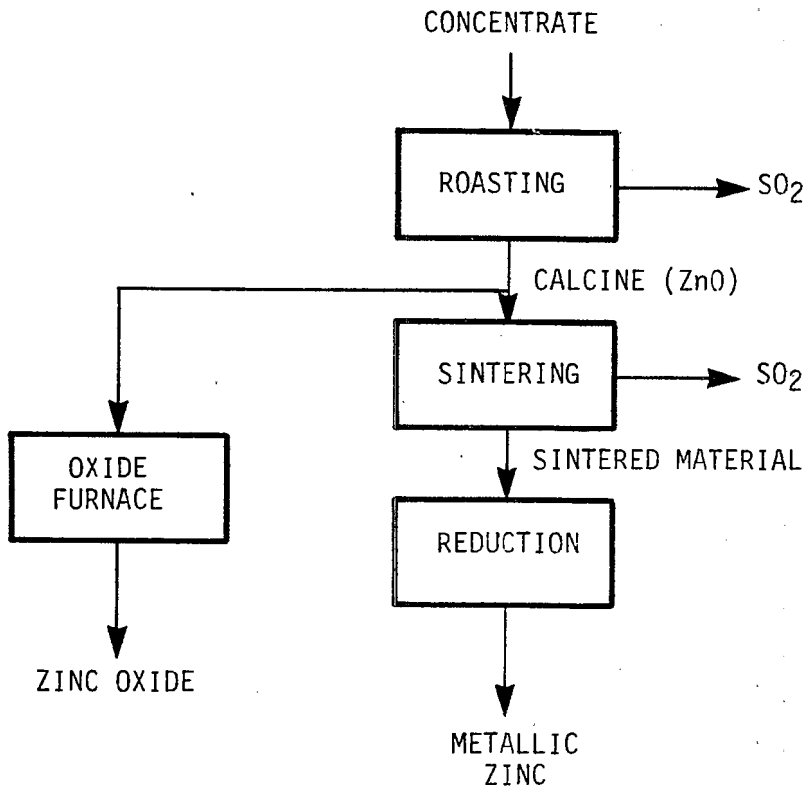

Figure 9.8.8-2 Primary electrolytic zinc smelting process.[1]

Table 9.8.8-4. EMISSION FACTORS FOR PRIMARY ZINC SMELTING WITHOUT CONTROLS[a,7]

Type of operation	Particulates	
	lb/ton	kg/MT
Roasting (multiple-hearth)	120	60
Sintering	90	45
Horizontal retorts	8	4
Vertical retorts	100	50
Electrolytic process	3	1.5

[a]Approximately 2 unit weights of concentrated ore are required to produce 1 unit weight of zinc metal. Emission factors expressed as units per unit weight of concentrated ore processed.

Table 9.8.8-5. TYPICAL ZINC ROASTING OPERATIONS[8]

Type of roaster	Operating temperature, °C	Feed capacity, Mg/Day	Dust in offgas, % of Feed
Multiple-hearth	650 to 730	45 to 110	5 to 15
Multiple-hearth[a]	870 to 900	230	5 to 15
Ropp[b]	650	36 to 45	5
Fluidized-bed[c]	890	130 to 200	70 to 80
Fluidized-bed[a]	900	220 to 320	75 to 85
Fluidized-bed (Lurgi)	930	220	50
Suspension	980	110 to 320	50
Fluid column	1000	200	17 to 18

[a]First stage is a partial roast in multiple-hearth; second stage is a dry-feed dead roast in fluidized-bed.
[b]Partial roast.
[c]Slurry feed.

Table 9.8.8-6. COMPONENTS OF THE DUST FROM MULTIPLE-HEARTH, SUSPENSION, AND FLUIDIZED-BED ROASTERS[9]

Component	Percent by weight
Zinc	54.02
Lead	1.4
Sulfur	7.0
Cadmium	0.41
Iron	7.0
Copper	0.4
Manganese	0.21
Tin	0.01
Mercury	0.03

percent zinc and up to 3 percent lead by weight. Uncontrolled emissions from horizontal retorts are estimated to be about 8 lb/ton of concentrate processed, while emissions from vertical retorts are estimated to be 100 lb/ton. Emissions from electrothermic reduction furnaces are negligible.

Zinc vapor may either be condensed to produce metallic zinc or oxidized to produce ZnO product. Because ZnO product is collected in air pollution control equipment, emissions from any well-operated ZnO production furnace are relatively minor.[10]

The major sources of fugitive dust are the sintering operation, ore handling and transfer, and casting of molten zinc. Casting produces nearly 34 percent of all fugitive emissions.[4]

9.8.8.2 Control Techniques. Fabric filters and electrostatic precipitators are the most common particulate control techniques used by the zinc smelting industry. Both fabric filters and precipitators are used to control particulate from domestic zinc sintering machines. A fabric filter is normally chosen only when the SO_3 in the flue gas is low since high SO_3 concentrations can corrode fabric filter structures and deteriorate the filter fabric.[1] Use of wet scrubbers to control sinter plant particulate emissions and use of cyclones and electrostatic precipitators in series for roasting plant particulate emissions control has been reported.[11] In addition, roaster gases are typically treated in a sulfuric acid plant for the removal of sulfur dioxide.

Fugitive particulate emissions derive from a variety of operations and processes; their control requires measures applicable to the source. Ore handling and transfer fugitive emissions can be controlled by using water sprays and confining emissions by enclosure. Sinter machine fugitive emissions can be controlled by using water sprays, reducing the distance that the sintered material falls when discharged from the sinter machine, enclosing dusty areas, and collecting emissions by hooding and ducting to a fabric filter. Emissions from zinc casting are also controlled by collecting the emissions in hoods and ducting them to a baghouse.

Standards of performance for new and modified zinc smelting facilities, promulgated on January 15, 1976, limit particulate emissions from zinc sintering machines to 50 mg/dscm (0.022gr/dscf). Emissions of sulfur dioxide

contained in roaster gases, and from any sintering machine that eliminates more than 10 percent of the sulfur initially contained in the zinc sulfide concentrates processed, are limited to 0.065 percent by volume (650 parts per million).

REFERENCES FOR SECTION 9.8.8

1. Background Information for Standards of Performance, Primary Copper, Zinc and Lead, Volume I: Proposed Standards. U.S. Environmental Protection Agency. Publication No. EPA-450/2-74-002a. October 1974.

2. Minerals Yearbook. U.S. Bureau of Mines. Washington, DC. 1972.

3. Yearbook of the American Bureau of Metal Statistics for 1971. June 1972.

4. Assessment of Fugitive Particulate Emission Factors for Industrial Processes. U.S. Environmental Protection Agency. Publication No. EPA-450/3-78-107. September 1978.

5. Field Surveillance and Enforcement Guide for Primary Metallurgical Industries. U.S. Environmental Protection Agency. Publication No. EPA-450/3-73-002.

6. Atmospheric Modeling Data from National Emission Data System (NEDS). U.S. Environmental Protection Agency. May 1979.

7. Compilation of Air Pollutant Emission Factors. U.S. Environmental Protection Agency. Publication No. AP-42. August 1977.

8. Weisburd, M. I. Field Operations and Enforcement Manual for Air Pollution Control, Volume III: Inspection Procedures for Specific Industries. System Development Corporation. McLean, VA. Publication No. APTD-1102. August 1972.

9. Technical Guidance for Control of Industrial Process Fugitive Particulate Emissions. U.S. Environmental Protection Agency. Publication No. EPA-450/3-77-010. March 1977.

10. Trace Pollutant Emissions from the Processing of Metallic Ores. PEDCo-Environmental Specialists, Inc. Cincinnati, OH. Publication No. PB-238 655. October 1974.

11. Vandegrift, A. E. Particulate Pollutant System Study, Volume III: Handbook of Emission Properties. Midwest Research Institute. Kansas City, MO. Publication No. DPB-203 522, APTD 0745. May 1971.

9.8.9 Secondary Aluminum Operations

Secondary aluminum operations entail refining scrap aluminum to produce specification aluminum or aluminum alloy casting metal. These operations involve scrap processing (e.g., sweating) and aluminum melting and refining.

Secondary aluminum production accounts for about 24 percent of the total aluminum sales in the United States. There are about 86 secondary aluminum production plants in the United States; about 40 companies account for 95 percent of the country's secondary aluminum production. The major product is casting material, which accounts for 90 percent of secondary aluminum sales volume.[1]

Nationwide particulate emissions in 1977 from sweating and refining/fluxing operations were estimated at 15,400 Mg/yr.[2] In 1973, fugitive particulate emissions were estimated at 1808 Mg.[3]

9.8.9.1 Process Description and Emissions. Aluminum scrap processing involves the separation of aluminum from contaminants or attachments such as iron, brass, and magnesium. Higher melting materials, such as iron and brass, are typically separated from aluminum by charging these materials into a sweating furnace where the aluminum melts and separates from the higher melting materials and then flows from the furnace into a mold. The higher melting materials and the hot aluminum dross formed in the furnace are removed periodically. The hot aluminum dross contains suspended metallic aluminum, which can be removed and recovered by mechanical separation processes. These processes can result in emissions of fine dust. Scrap that is contaminated with large amounts of paint, oil, or grease is often dried in a rotary dryer to remove the organic contamination before charging the scrap into a refining furnace.

9.8.9.1.1 Emission sources. The secondary aluminum industry generates air emissions primarily from its presmelting preparation and smelting operations. Presmelting preparation sources of air emissions include high iron scrap sweating furnaces, borings and turnings scrap dryers, and dry residue milling machines. Smelting operations that generate air emissions include charging, fluxing, and demagging. In addition to these main sources, there are a few miscellaneous sources of air emissions associated with the manufacturing process. Table 9.8.9-1 identifies the primary air emission sources and pollutants.[4]

Table 9.8.9-1 PRIMARY AIR EMISSION SOURCES AND POLLUTANTS FOR SECONDARY ALUMINUM MANUFACTURING OPERATIONS[4]

Process operation	Air emission source	Pollutant(s)
Presmelting preparation	High iron scrap sweating furnace	Unburned hydrocarbons, carbonaceous particulate, inorganic particulate, CO
	Borings and turnings scrap dryer	Unburned hydrocarbons, carbonaceous particulate, inorganic particulate, CO
	Dry residue milling machines	Inorganic particulate
Smelting operations		
Charging	Furnace forewell	Unburned hydrocarbons, carbonaceous particulate, inorganic particulate, CO
Fluxing	Furnace	Particulate (such as $CaCl_2$, NaCl)
Demagging	Furnace	Chlorine (Cl_2), aluminum chloride ($AlCl_3$), hydrogen chloride (HCl), magnesium chloride ($MgCl_2$), inorganic particulate[a]
		or
		Hydrogen fluoride (HF), aluminum fluoride (AlF_3), magnesium fluoride (MgF_2), inorganic particulate[b]

[a]Pollutants resulting from chlorine demagging.
[b]Pollutants resulting from fluoride demagging.

Presmelting Sources--In theory, an aluminum sweating furnace can be operated with minor emissions of air contaminants if clean, carefully hand-picked metal free of organic material is processed. In practice, this selective operation does not occur and high emissions periodically result from the furnaces. Smoke is caused by the incomplete combustion of organic constituents such as rubber, oil and grease, plastics, paint, cardboard, and paper. Fumes are produced from the oxidation of zinc and magnesium contaminants.

In order to avoid the production of black smoke during melting and refining, many plants thermally treat their aluminum borings and turnings in a dryer. These borings and turnings are contaminated with oils and other organic compounds. The exhausts from these dryers can contain significant amounts of fume composed of unburned hydrocarbons and other gaseous and particulate carbon compounds.

Residues used by the secondary aluminum industry are generally composed of 10 to 30 percent aluminum, with occluded aluminum oxide fluxing salts (mostly NaCl and KCl), dirt and various other chlorides, fluorides, and oxides. In the dry milling process used to separate metals from nonmetals, dust (inorganic particulate) is generated at the crusher, in the mill, at the shaker screen and at points of transfer.

Smelting Sources--The major sources of air emissions from secondary aluminum smelting operations occur during charging, fluxing, and demagging. During charging, black carbonaceous smoke is emitted, resulting from incomplete combustion of paint, coatings and oil present in dirty scrap. The smoke consists of oily carbonaceous particulate, submicron carbon and inorganic particulate, and hydrocarbons.

Cover fluxes and solvent fluxes are used to remove solid impurities from the molten bath (such as dirt and various oxides) and also provide alloying agents for the molten aluminum. Cover flux initiated emissions include fumes composed of salts and oxides such as sodium chloride (NaCl), calcium chloride ($CaCl_2$), calcium fluoride (CaF_2), aluminum fluoride (AlF_3), aluminum oxide (Al_2O_3), magnesium oxide (MgO), etc. Solvent fluxes cause the formation of aluminum chloride ($AlCl_3$) vapor, which condenses to form submicrometer-sized particulates.

Demagging operations, either performed by the addition of aluminum fluoride or gaseous chlorine to the molten bath, are a major source of emissions. Aluminum fluoride addition results in the formation of a magnesium fluoride (MgF_2) slag and is responsible for the generation of HF (due to the hydrolysis of H_2O and F^-). Chlorine addition presents several problems: (1) free chlorine escape, (2) aluminum chloride emissions, (3) reaction of the hydroscopic $AlCl_3$ with the moisture in the air to form HCl, and (4) magnesium chloride ($MgCl_2$) emissions from the fuming dross. The demagging operation may be conducted in the charging zone, combustion zone, a third well within the reverberatory furnace or a separate holding furnace.

Another process has been developed that produces lower emissions during the fluxing and refining of aluminum alloys. This process utilizes a mixture of an inert gas (nitrogen or argon) with 3 to 5% dichloro-difluro methane (CCl_2F_2) commonly known as Freon 12. The use of this mixture appears to significantly reduce process, fugitive, and visible emissions.[5]

Miscellaneous Sources--In addition to the presmelting and smelting emission sources, there are a number of minor sources of air emissions throughout the secondary aluminum manufacturing process. These minor sources are all associated with the storing, sorting, loading, and transporting of scrap. During these operations, fugitive dust is generated which results in some particulate emissions. These emissions are minor since the majority of the dust generated is quite large and falls to the ground immediately.

9.8.9.2 Control Techniques. There are three basic types of pollution control systems used in the control of secondary aluminum operations. These include wet systems, dry systems, and those systems involving process adjustments.[6]

Wet Scrubber--The wet scrubber is very suitable for control of hygroscopic emissions from the aluminum smelter, particularly with the chlorination demagging process. The spray quenching of the hot furnace gases creates steam which reacts with the $AlCl_3$ gas to form hydrated aluminum oxide (Al_2O_3) and HCl. Both of these are relatively easy to remove in an appropriately designed and operated scrubber.

In order to obtain adequate collection efficiency, the use of high-efficiency wet scrubbers, with a caustic solution as the scrubbing medium,

has been found effective. Table 9.8.9-2 shows typical test data on the collection efficiency for various wet scrubbers.[7] Scrubber collection efficiency depends mainly upon scrubbing ratio [m^3 of liquid/m^3 to gas (gal/1000 cu ft)], velocity of gas in the scrubber, contact time and pressure drop. The values given in Table 9.8.9-2 are typical efficiencies and do not reflect the entire range of results.

Scrubber Plus Baghouse--To more efficiently control particulate emissions from chlorinating aluminum, the wet scrubber may be followed by a baghouse or electrostatic precipitator. At present, the trend in control equipment for aluminum-fluxing emissions appears to be away from electrical precipitators and toward the scrubber-baghouse combination. More precise controls need to be developed for this technique to adapt the scrubber to the peak chlorine "burn-off" cycle when the temperature of the aluminum furnace is raised to volatilize all residual chlorine from the system.

Conventional Baghouse--Conventional baghouses (fabric filters) are used extensively in the secondary aluminum industry for handling dust that emanates from several of the operations. Hoods are placed over loading and unloading areas, conveyors, and transfer points in order to capture the particulate emissions. The dust-laden gas stream is then cleaned via a baghouse. These systems generally operate in the 95 percent efficiency range (typically 96 percent capture efficiency and 99 percent control efficiency).

Conventional baghouses have not been effective, however, in the removal of fumes from the demagging operations. Blinding occurs during the collection of submicron particulates. These particles enter into the interstices of the weave and create a barrier to gas flow. When blinding occurs, the pressure drop rises rapidly and gas flow diminishes. Another problem is the presence of sparks which cause bag perforations.

Coated Baghouse--A new approach for controlling pollution from secondary aluminum smelters is the use of the coated baghouse. These baghouses have been used in the primary industry for some time. The basic concept is to coat a standard baghouse with a material that absorbs and neutralizes the acid gases while simultaneously filtering out the fine particulates.

Afterburner--Afterburners are also extensively used throughout the secondary aluminum industry in order to reduce hydrocarbon emissions. Afterburners are typically used for controlling emissions from the dryers and

Table 9.8.9-2. SCRUBBER COLLECTION EFFICIENCY FOR EMISSIONS FROM ALUMINUM CHLORINE FLUXING[7]

Contaminants	Scrubber collection efficiencies,[a] percent			
	Slot scrubber		Packed-column scrubber	
	Water	10% caustic solution	Water	10% caustic solution
HCl	90 to 95	95 to 99	95 to 98	99 to 100
Cl_2	30 to 50	50 to 60	75 to 85	90 to 95
Particulate matter	30 to 50	50 to 60	70 to 80	80 to 90

[a]Collection efficiency depends mainly upon scrubbing ratio (liter/cu. meter), velocity of gas in scrubber, contact time and, to a lesser extent, on other aspects of the design. These values are typical efficiencies obtained by actual tests but do not reflect the entire range of results.

furnaces. When afterburner temperatures are maintained at 1033 to 1144 K (1400 to 1600°F) and exhaust gas residence times are 1/2 to 1 second, essentially complete combustion will occur and there are virtually no hydrocarbon emissions.

REFERENCES FOR SECTION 9.8.9

1. Gerstein, S. M., and M. E. Franza. Control Technology for Secondary Aluminum Smelters. (Presented at 68th Annual Meeting of the Air Pollution Control Association. Boston, MA. June 15-20, 1975.)

2. OAQPS Data File of Nationwide Emissions. U.S. Environmental Protection Agency. Research Triangle Park, NC.

3. Assessment of Fugitive Particulate Emission Factors for Industrial Processes. U.S. Environmental Protection Agency. Publication No. EPA-450/3-78-107. September 1978.

4. Compilation of Air Pollutant Emission Factors. U.S. Environmental Protection Agency. Publication No. AP-42. February 1972.

5. Control of Particulate Emissions in the Primary Nonferrous Metals Industry - Symposium Proceedings. U.S. Environmental Protection Agency. Publication No. EPA-600/2-79-211. December 1979.

6. Screening Study on Feasibility of Standards of Performance for Secondary Aluminum Manufacturing. The Research Corporation of New England. Wethersfield, CT. EPA Contract No. 68-02-2615. September 1978.

7. Vandergrift, A. E., et al. Particulate Pollutant System Study, Volume III: Handbook of Emission Properties. Midwest Research Institute. Kansas City, MO. Publication No. APTD-0745. May 1971.

9.8.10 Secondary Copper Smelting and Alloying

Secondary copper smelting and alloying involves the processing of copper-containing scrap metal and oxides to produce specification copper or copper base alloys (e.g., brasses and bronzes). At least one furnace operation must be used to produce usable secondary copper and copper alloys. Furnace operations include sweating, burning/incineration, metal oxide reduction (primarily in blast or cupola furnaces), melting, refining, and alloying of copper and copper alloys.

The secondary copper smelting and alloying industry is concentrated in the country's major population centers, primarily in the northeastern, midwestern, and Pacific coast states. About 60 manufacturers produce approximately 272,000 Mg of refined brass and bronze ingot.[1] Brass and bronze ingot production experienced a decline after 1966, and excess capacity may exist in the industry.[2]

Nationwide particulate emissions in 1977 were estimated to be 38 Gg.[3] Fugitive emissions in 1976 were estimated at 766 Mg.[4]

9.8.10.1 Process Description. Of the five basic processes in this industry, namely, scrap pretreatment, smelting, refining, alloying, and pouring, only scrap pretreatment can be performed without the use of furnaces. Certain types of scrap can be pretreated by hand sorting and/or mechanically/magnetically removing iron contaminants. Other types of scrap may require furnace treatment, such as the sweating of lead-covered copper cable, the incineration of plastic coated copper wire and cable, and the vaporization of oil from chips and borings in heated kilns. Recently, industry has been charging without pretreatment to take advantage of the Btu value of the coatings, oil, etc., in reducing energy requirements.

Low grade copper scrap, including copper oxide, is usually smelted in a blast furnace or cupola to reduce the oxide to a metallic copper-containing material called black copper. This material may be further processed and ultimately electrolytically- or fire-refined to produce a high purity metallic copper. These copper refining processes are essentially the same as those used in primary copper refining. If the blast furnace copper is to be used in copper alloy production, further refining and alloying is performed in other furnaces.

To produce copper base alloys, pretreated scrap and/or blast furnace copper is then melted in direct-fired reverberatory furnaces, electric induction furnaces, or indirect-fired crucible furnaces. The melted charge can be refined (i.e., impurities removed or excess alloying elements removed) by the use of fluxes and/or by the addition of oxygen to the molten bath to oxidize and separate from the bath such materials as iron, manganese, silicon, aluminum, and zinc. Alloying materials such as tin, zinc, and silicon may then be added to bring the alloy within specification. The alloy is then poured into ingots, or, in some cases, castings are made. Figure 9.8.10-1 shows the raw material and product flow for the secondary copper industry.

9.8.10.2 Emission Characteristics and Applicable Control Technologies. Typical components of the particulate matter emitted from secondary copper production operations include zinc and lead oxides, copper, and flyash; depending on the metal alloy composition, silica, tin, cadmium, and copper compounds may also be present. The metallic fumes are submicrometer in size (0.03 to 0.5 micrometers) and agglomerate readily.[5] Particulate matter collected in a secondary brass and bronze smelter baghouse was analyzed and the resulting chemical component breakdown is shown in Table 9.8.10-1.[6]

Fugitive particulate emissions result from all furnace operations. The majority of emissions result from wire insulation burning and from reverberatory furnace charging and tapping operations.[4]

Fabric filters are the principal devices used to control particulate emissions from secondary brass and bronze furnace operations. The furnace exhaust gases must be cooled sufficiently to prevent damage to bags. Venturi scrubbers are also used, but to a limited extent, and electrostatic precipitators are even less frequently used.

Scrap pretreatment operations such as kiln drying of oil/organic contaminated chips and borings and blast furnace operations can result in the emission of significant amounts of oily and sticky particulate matter. Oily and sticky material should be incinerated, particularly if the furnace exhaust is fed to a baghouse, because such material can blind the bag fabric.

Dacron is the most widely accepted fabric for bag construction and can be used if gas temperatures entering the fabric filter are below 149°C. Glass fabric bags can be used with gas temperatures as high as 260°C. A

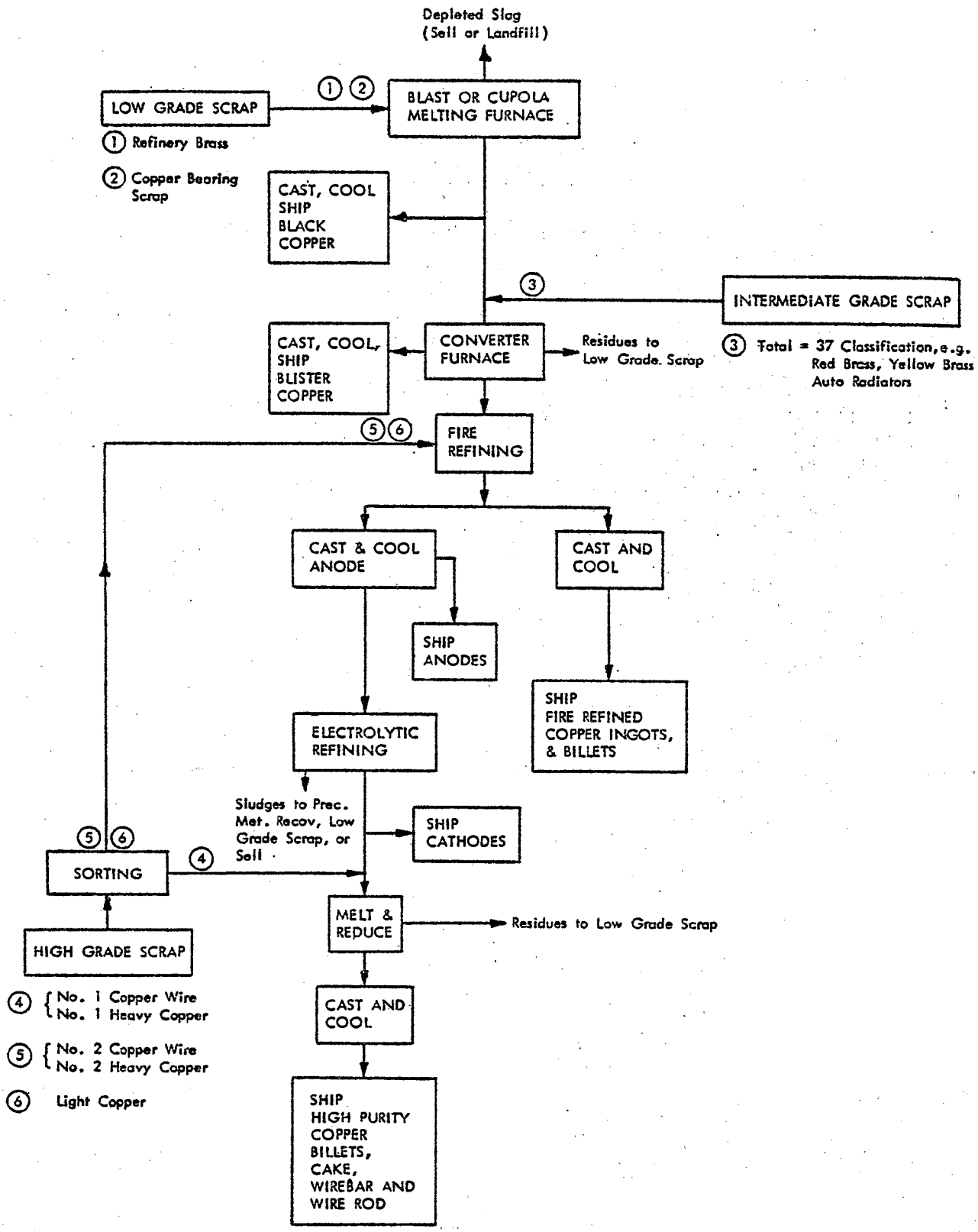

Figure 9.8.10-1 Raw material and product flow diagram for the secondary copper industry.

Table 9.8.10-1. COMPOSITION OF PARTICULATE MATTER COLLECTED FROM A SECONDARY BRASS AND BRONZE SMELTER[6]

Component	Particulate composition, percent by weight
Zinc	45.0 to 77.0
Lead	1.0 to 12.0
Tin	0.3 to 2.0
Copper	0.05 to 1.0
Chlorine	0.5 to 1.5
Sulfur	0.1 to 0.7

filtering velocity of 0.6 m/min is acceptable, and a pressure drop of 1 kPa is common.[1] An exhaust duct velocity of 760 to 950 m/min is desirable to limit dust deposition in ducting.[5] Baghouse particulate collection efficiencies of 93.7 and 96.2 percent are reported for crucible furnace operations, and a collection efficiency of 96.0 percent is reported for an electric furnace operation.[5]

Venturi scrubbers can have pressure drops that vary between 7.5 to 25 kPa. A 15 kPa pressure drop corresponds to a throat velocity of about 61 m/s and requires water at a rate of 0.4 L/s per cubic meter/min of gas.[1] Particulate collection efficiencies for three scrubbers serving brass furnaces range from 53 to 63 percent.[1]

A schematic of a baghouse control system serving typical secondary brass and bronze furnace operations is shown in Figure 9.8.10-2. Table 9.8.10-2 lists the types of emission control equipment being used by this industry. The average stack parameter data for the secondary copper industry is presented in Table 9.8.10-3.[7]

Table 9.8.10-4 provides data from various furnaces at a typical secondary copper smelting and refining plant.[8] Table 9.8.10-5 provides a summary of measured emission data from the various furnace process control systems of a few plants in the United States.[8]

Fugitive emissions result primarily from furnace charging, metal tapping, metal casting, and wire pretreatment incineration operations. Control techniques include using properly designed collection hoods with adequate air flow, maintaining molten copper alloys at the lowest possible temperature to prevent the emission of low boiling constituents (e.g., zinc), and increasing the exhaust rate of incineration control systems.[6]

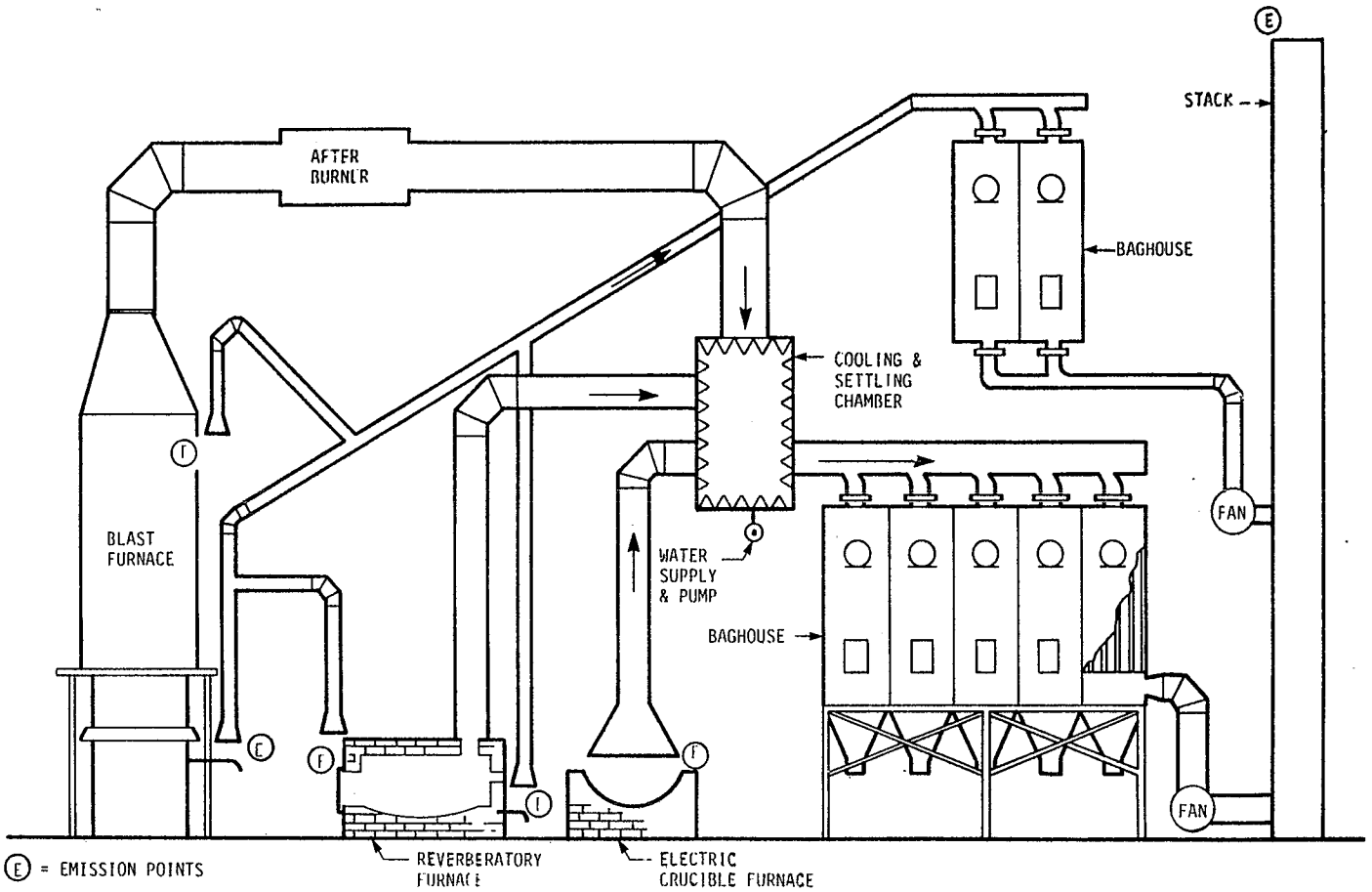

Figure 9.8.10-2 Air pollution control system in the brass and bronze industry.[1]

Table 9.8.10-2. SUMMARY OF AIR POLLUTION CONTROL EQUIPMENT IN USE IN THE SECONDARY COPPER INDUSTRY[1]

Furnace or facility type	Number	Control equipment
Reverberatory	18 12	Baghouse No controls
Rotary	16 9	Baghouse No controls
Electric	5 2	Baghouse Scrubber
Crucible	16	No controls
Sweat	4 1	No controls Afterburner & baghouse
Cupola	4 1 1	Baghouse No controls Wet collector
Wire burning	1	Afterburner chamber
Rotary dryer	1	No controls
Incinerator	1	Afterburner
Raw material concentrator	1 2	Cyclone No controls
Slag furnace	1	Baghouse

Table 9.8.10-3. SECONDARY COPPER INDUSTRY STACK PARAMETER DATA[7]

Facility or operation	Nationwide no. of facilities or operations	Uncontrolled emission factor, kg of particulate per Mg of metal charged	Average stack height, m	Average stack diameter, m	Average stack temp., °C	Average gas flow, Am^3/s	Average operating rate Gg of metal charged to each furnace per year
Blast furnace	9	18.0	25	1.2	42	5.57	2.59
Crucible furnace	97	12.0	15	1.1	131	20.3	6.92
Cupola furnace	26	73.0	27	0.98	146	6.94	18.1
Electric induction furnace	90	2.0	15	1.1	127	17.3	16.1
Reverberatory furnace	45	70.0	19	0.98	403	10.3	8.69
Rotary furnace	32	60.0	17	1.2	178	12.2	2.75

TABLE 9.8.10-4. OPERATING SPECIFICATIONS AND UNCONTROLLED AND CONTROLLED EMISSION RATES FOR THE TYPICAL SECONDARY COPPER SMELTING AND REFINING PLANT[8]

Parameters	Furnace types					
	Cupola	Rotary converter	Reverberatory anode furnace No. 1	Reverberatory anode furnace No. 2	Reverberatory fire refining furnace	Shaft furnace
Net Cu content production, Mg/yr (tons/yr)	22,680 (25,000)	22,680 (25,000)	22,680 (25,000)	22,680 (25,000)	9,070 (10,000)	54,430 (60,000)
Total process charge rate, Mg/hr (tons/yr)	8.2 (9.0)	3.4 (3.7)	4.5 (5.0)	4.5 (5.0)	1.1 (1.2)	6.5 (7.1)
Total hours of operation	8,400	8,400	4,200	4,200	8,400	8,400
Gas effluent rate, m^3STP/min (SCFM)	1,698 (60,000)	1,132 (40,000)	682 (24,100)	682 (24,100)	566 (20,000)	730 (25,800)
Gas temperature, °C (°F)	93 (200)	127 (260)	78 (173)	78 (173)	78 (173)	247 (476)
Stack height, m (ft)	23 (75)	23 (75)	17 (55)	17 (55)	17 (55)	17 (55)
Fuel or charge	coke	fuel oil	Fuel oil Natural gas Coke	Fuel oil Natural gas Coke	Fuel oil Natural oil Coke	Natural gas

TABLE 9.8.10-4. (concluded)

Parameters	Furnace types					
	Cupola	Rotary converter	Reverberatory anode furnace No. 1	Reverberatory anode furnace No. 2	Reverberatory fire refining furnace	Shaft furnace
Burning rate, GJ/Mg (10^6 Btu/ton) of Cu content	23.45 (20.16)	3.99 (3.43)	1.42 (1.22) 0.27 (0.23) 0.33 (0.28)	1.42 (1.22) 0.27 (0.23) 0.33 (0.28)	1.42 (1.22) 0.27 (0.23) 0.33 (0.28)	2.27 (1.95)
Uncontrolled particulates emission factor, kg/Mg (lb/ton) of charge	17 (33)	22 (45)	12 (24)	12 (24)	20 (40)	0.5 (1.0)
Uncontrolled particulates, kg/hr (lb/hr)	136 300)	76 (167)	54 (119)	54 (119)	22 (48)	2.6 (5.7)
Controlled particulates, kg/hr (lb/hr)	4.1 (9.0)	2.3 (5.0)	1.8 (4.0)	1.8 (4.0)	0.5 (1.0)	1.1 (2.4)
Sulfur emissions, kg/hr (lb/hr)	3.6 (8.0)	23 (50)	4.5 (10)	4.5 (10)	1.8 (4.0)	0

TABLE 9.8.10-5. SUMMARY OF AVAILABLE EMISSION DATA BY PLANT AND EMISSION SOURCE[8]

Control system	Type of furnace	Particulates, kg/hr (lb/hr)
Baghouse	Cupola	16.3 (35.9)
Baghouse	Slag cleaning	4.9 (10.8)
Baghouse	Converter	2.8 (6.2)
Baghouse	Reverberatory	0.6 (1.4)
Baghouse	Reverberatory	4.5 (9.8)
Baghouse	Reverberatory	2.9 (6.4)
Baghouse	Reverberatory	0.3 (0.7)
Baghouse	Reverberatory	1.1 (2.5)
Settling chamber	Shaft	1.5 (3.2)
Baghouse	Cupola	4.6 (10.1)
None	Holding	0.3 (0.6)
High energy venturi with mist eliminator	Kaldo	8.1 (17.8)
	Kaldo	8.1 (19.2)
Baghouse	Reverberatory	1.7 (3.7)
Baghouse	Reverberatory	4.3 (9.4)
None	Billet	4.8 (10.5)
None	Shaft	1.2 (2.7)
Baghouse	Cupola	4.1 (9.0)
Baghouse	Converter	2.3 (5.0)
Baghouse	Reverberatory	4.5 (10.0)
None	Reverberatory	15.1 (33.4)
None	Reverberatory	30.2 (66.6)

REFERENCES FOR SECTION 9.8.10

1. Secondary Brass and Bronze Ingot Production Plants. Inspection Manual for Enforcement of New Source Performance Standards. U.S. Environmental Protection Agency, Division of Stationary Source Enforcement. Washington, DC. Publication No. EPA-340/1-77-003. January 1977.

2. Background Information for Proposed New Source Performance Standards. U.S. Environmental Protection Agency, Office of Air Quality Planning and Standards. Research Triangle Park, NC. Publication No. APTD-1352a. June 1973.

3. OAQPS Data File of Nationwide Emissions. U.S. Environmental Protection Agency, Office of Air Quality Planning and Standards. Research Triangle Park, NC. June 1973.

4. Zoller, T., T. Bertke, and T. Janszen. Assessment of Fugitive Particulate Emission Factors for Industrial Processes. U.S. Environmental Protection Agency, Office of Air Quality Planning and Standards. Research Triangle Park, NC. Publication No. EPA-450/3-78-107. September 1978.

5. Vandegrift, A. E., et al. Particulate Pollutant System Study, Volume III: Handbook of Emission Properties. Midwest Research Institute. Kansas City, MO. Publication No. PB-203-522. May 1971.

6. PEDCo Environmental, Inc. Technical Guidance for Control of Industrial Process Fugitive Particulate Emissions. U.S. Environmental Protection Agency. Publication No. EPA-450/3-77-010. March 1977.

7. Atmospheric Modeling Data from National Emission Data System (NEDS). U.S. Environmental Protection Agency, Office of Air Quality Planning and Standards. Research Triangle Park, NC. May 1979.

8. Source Category Survey: Secondary Copper Smelting and Refining Industry. U.S. Environmental Protection Agency, Office of Air Quality Planning and Standards. Research Triangle Park, NC. Publication No. EPA-450/3-80-011. May 1980.

9.8.11 Secondary Lead Smelting

Secondary lead smelting involves the processing of scrap lead (primarily from recycled car batteries) and scrap lead oxides to produce usable lead and lead alloys that conform to specified composition requirements. In the United States at the end of 1975, there were approximately 115 secondary lead smelting plants operated by 85 firms. Two of these firms accounted for over half of the total secondary lead output. The industry has experienced an average annual growth rate of about 1.4 percent (Bureau of Mines, 1975). During 1977, 543,000 to 544,000 Mg of secondary lead were recovered by processing scrap lead materials.[1] Secondary lead production is used primarily in the manufacture of lead-acid storage batteries. Secondary lead is also used in the manufacture of such products as solder and other lead alloys.

The particulate matter emitted from secondary lead processing operations typically consists of PbO, SnO, ZnO, tar, flyash, coke dust, sulfates, and sulfides. The metallic fume particulate emissions are submicrometer in size with a mean diameter of about 0.3 micrometers for unagglomerated material.[2] Nationwide particulate emissions from blast and reverberatory furnaces in 1977 were estimated by EPA to be 2180 Mg.[3] Uncontrolled fugitive particulate emissions were estimated in 1973 to be 4250 Mg.[1]

9.8.11.1 Process Description and Emissions. In the secondary smelting, refining, and alloying of lead, the three types of furnaces most commonly used are the blast or cupola, reverberatory, and pot. The grade of metal produced (soft, semisoft, or hard) dictates the type of furnace to be used. Scrap lead and lead-based metals are melted and the scrap oxides reduced to their metallic state. The metal is refined (i.e., impurities removed) and the lead or lead-based alloy is brought into specification by the addition of appropriate alloying elements or the metal is oxidized to produce a specified lead oxide material. The secondary lead smelting process is illustrated in Figure 9.8.11-1.[4]

Scrap lead and lead oxides used to produce "hard" lead are fed into a blast furnace (or cupola), along with other charge materials including coke and limestone. The charged coke is ignited and air is forced into the furnace bottom and up through the charge material, which is continuously fed into the furnace. The charges move down the vertical furnace as the lead is

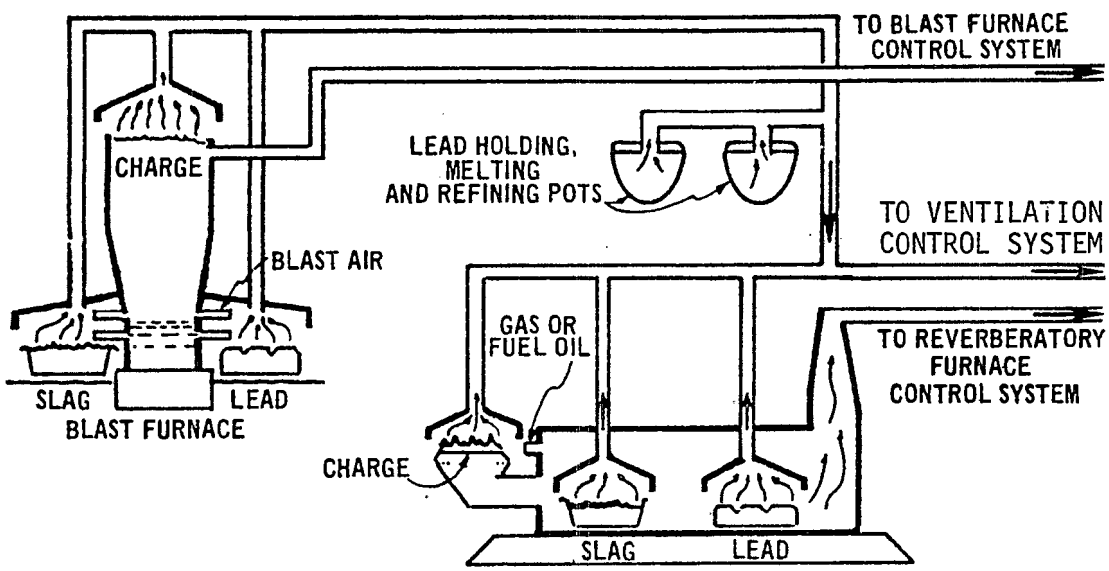

Figure 9.8.11-1 Secondary lead smelter process.[4]

melted or reduced and the other charge materials are combusted, reacted, or combined with the slag. The molten lead, as well as a slag material, are tapped (removed) from the bottom of the furnace. Particulate emissions consist of particles ranging in size from 1 to 100 micrometers.[5] These particles contain about 23 percent lead.[6]

Reverberatory furnaces, like blast-furnaces, are used for the production of semisoft lead. The furnaces are charged with scrap lead and lead oxides, along with other materials such as coke and limestone. Reverberatory furnaces can also be used to melt or sweat lead from lead-coated cable and other lead-coated materials. Fossil fuel-fired burners are used to heat reverberatory furnaces, and the furnaces are continuously charged. The lead is melted or reduced, and the charge materials are combusted, reacted, or combined with the slag. In the case of the sweating operation, the cable or other non-lead materials are removed and recovered. The semisoft lead is tapped from the bottom of the furnace, and the slag covering is skimmed off the molten lead. Particulates emitted from this operation are extremely fine (0.3 micrometers).[5]

Pot furnaces are used for remelting, alloying, and refining and are charged with scrap lead and/or lead tapped from blast or reverberatory furnaces. These furnaces are heated indirectly, usually by gas. In the refining process, aluminum and other compounds are added to the metal to react with impurities (e.g., antimony, arsenic, nickel, copper) which form complex compounds that are skimmed from the metal surface. Since the pot furnace is not direct-fired, and the charge is not subject to the same degree of turbulence as in blast and reverberatory furnaces, the quantity of particulate matter emitted is much less.

Lead oxide is produced from refined lead by the Barton Process for use in the manufacture of lead batteries, red lead, and paint. In this process, air is drawn through agitated molten lead. The resulting lead-oxide containing air stream is exhausted through a baghouse in which the lead oxide is captured. This process, by its nature, results in few emissions.[2,7]

Only limited data are available regarding quantitative estimates of fugitive particulate emissions from secondary lead smelters. The limited data do suggest that industrial process fugitive emissions are a factor in contributing to elevated ambient particulate concentrations near secondary lead smelters.[6]

9.8.11.2 Particulate Control Techniques. Well controlled secondary lead smelters reduce particulate emissions by the use of either fabric filters or high-energy scrubbers, with the most widely used device being fabric filters. The control system selected is generally dependent upon the type of furnace employed.

Blast furnace emissions contain metal oxides, bits of coke, and other particulate matter present in the charge. Since these emissions may contain oily and sticky particles, blast furnace fabric filters are usually preceded by an afterburner to incinerate these materials. If allowed to enter the filter units, oily and sticky particulate matter could blind the fabric. An afterburner is not needed in the reverberatory furnace control system, since the excess air and temperature are sufficient to incinerate these particles.

The gas temperature entering a fabric filter must not exceed about 149°C if Dacron bags are used or about 260°C if fiberglass bags are used.[5] For blast furnace/afterburner and reverberatory furnace exhaust, it is usually necessary to cool the gases by use of radiant cooling columns, evaporative water coolers, or air dilution jets. A schematic of blast and reverberatory furnace control systems is shown in Figure 9.8.11-2.

For baghouse control systems, a system pressure drop of up to 1 kPa is common, and a gas volume to bag cloth area of 2 to 1 is the accepted ratio to ensure efficient operation of the collection system. For venturi scrubber control systems, the system pressure drop can vary between 7.5 and 25 kPa. A 15 kPa pressure drop corresponds to a throat velocity of about 61 m/sec and requires water at a rate of 0.39 liters/minute per m^3/min of gas.[5] Baghouse particulate collection efficiencies of greater than 99 percent and 98 percent, for reverberatory and blast furnaces, respectively, have been reported.[2]

Particulate emissions measured by EPA of three well controlled blast furnaces averaged 5.9 mg/DNCM (0.09 kg/Mg lead produced), 18.1 mg/DNCM (0.30 kg/Mg) and 32.7 mg/DNCM (0.57 kg/Mg) for facilities controlled with afterburner/baghouse, afterburner/baghouse/venturi scrubber, and venturi scrubber respectively.[4] Baghouse controlled particulate emissions measured by EPA of two well controlled reverberatory furnaces average 8.1 mg/DNCM (0.11 kg/Mg lead produced) and 7.6 mg/DNCM (0.13 kg/Mg lead produced).[4]

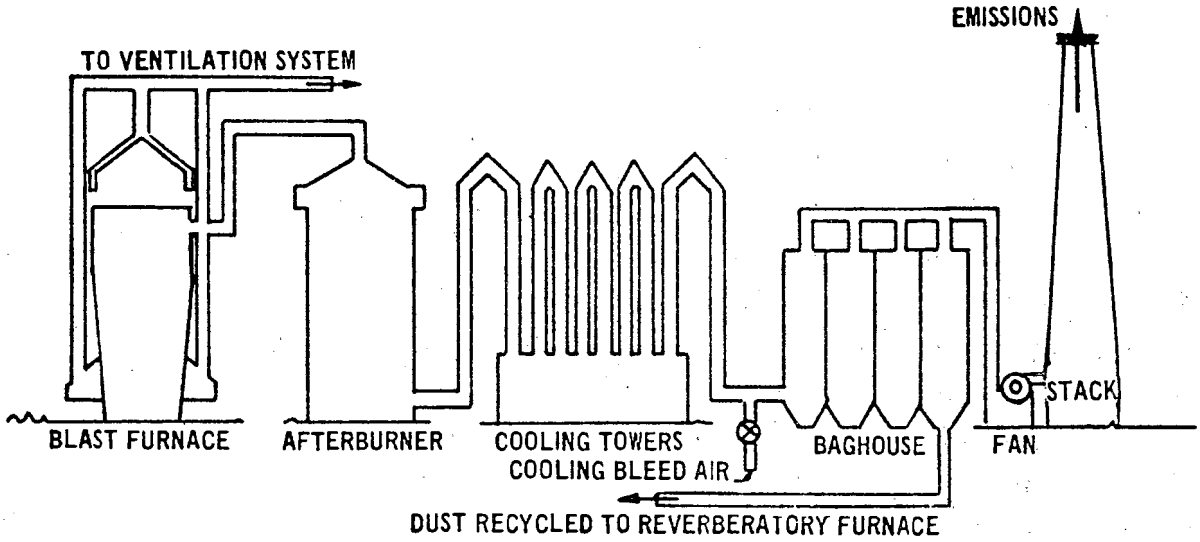

(a) Controlled lead blast furnace, afterburner and baghouse.

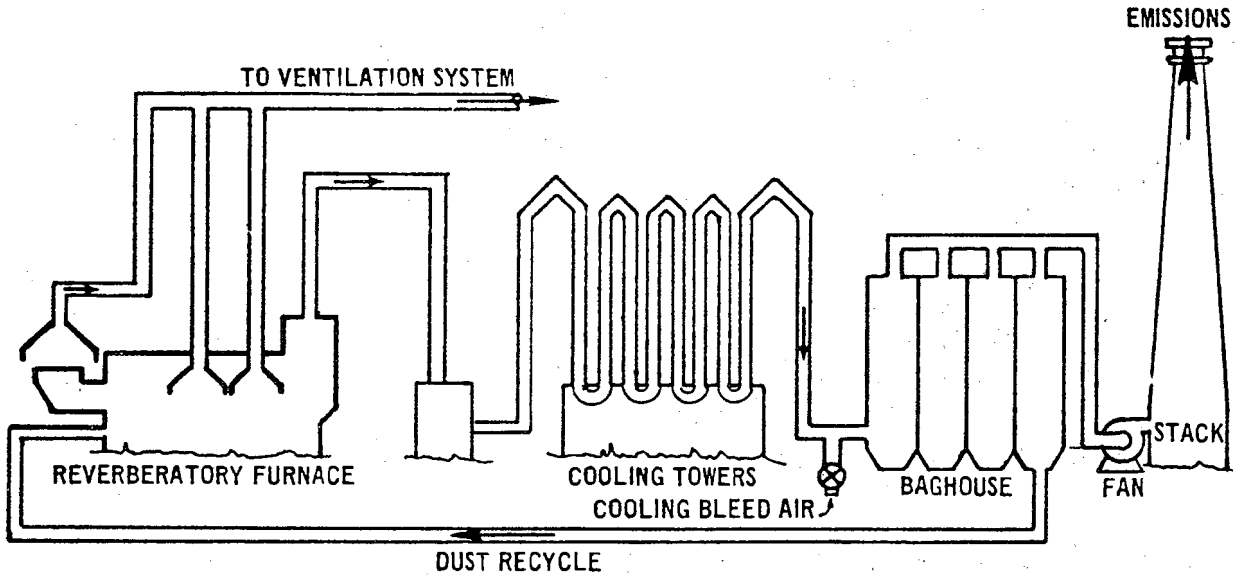

(b) Controlled lead reverberatory furnace, baghouse.

Figure 9.8.11-2 Control schemes for secondary lead (a) blast and (b) reverberatory furnaces.[4]

Baghouses and scrubbers are also used to control pot furnaces (Figure 9.8.11-3). During melting and holding operations associated with pot furnaces, uncontrolled emissions are quite low because the vapor pressure of lead is low at the melting temperature. During dross skimming and refining operations, emissions are substantially increased, and adequate ventilation must be provided to protect the health of the workers. The latter requirements govern the volume of exhaust gases.[4]

Emissions from blast and reverberatory furnaces are normally released into the atmosphere through stacks with an average height of 90 to 100 meters; stacks from pot furnaces are shorter, averaging 45 meters. Stack parameters from lead smelting emission sources are summarized in Table 9.8.11-1.[8]

Industrial process fugitive particulate emissions result from the receiving and handling of coke, limestone, and secondary lead materials, the sweating of lead scrap, furnace charging and tapping operations, and lead casting operations. Control of such emissions can be accomplished by applying a water spray during materials receiving and handling; improved hooding and ducting, and better control of operating parameters and procedures for charging, tapping, and sweating operations.[9]

9.8.11.3 Secondary Environmental Impacts. The predominant control devices for the secondary lead industry are fabric filters, along with a small number of high-energy scrubbers. Dust collected in baghouses can be recycled directly back to the furnace. When wet scrubbers are used, settling tanks and ponds are installed to precipitate the collected solids. The precipitate is removed, dried, and fed back to the furnace. Scrubbing water will pick up sulfur dioxide from the gas stream, causing the water to become acidic. Alkali can be added to the scrubber to control pH. Salts that precipitate with collected dust are also returned to the furnace and usually become part of the slag.

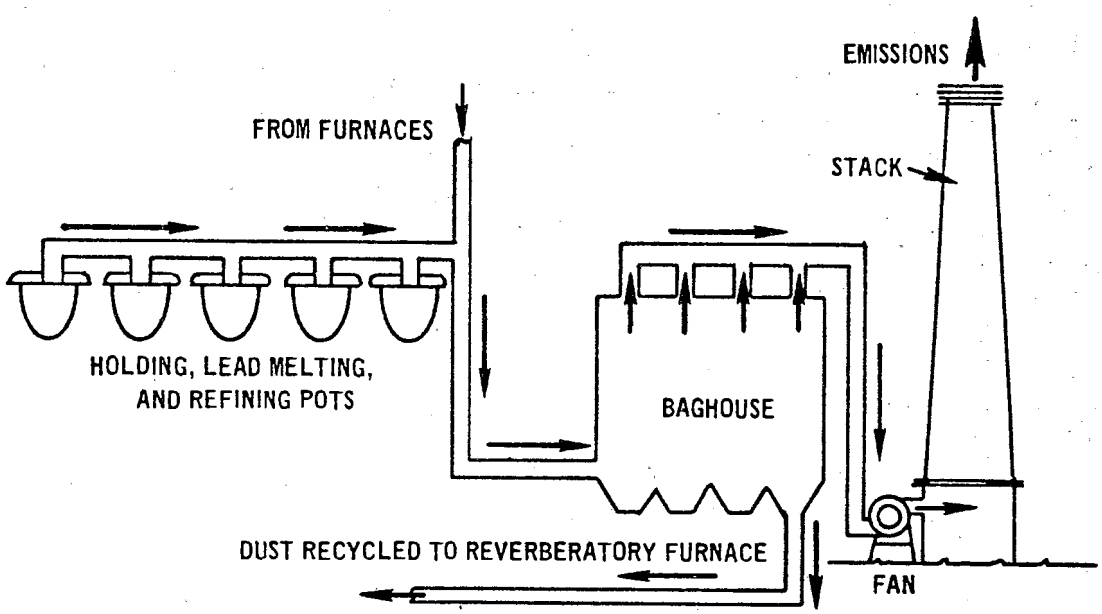

Figure 9.8.11-3 Controlled lead pot and ventilation system, baghouse.[4]

Table 9.8.11-1. STACK PARAMETERS FOR EMISSION SOURCES WITHIN THE LEAD SMELTING INDUSTRY[8]

Facility or operation	Nationwide number of facilities or operations	Average stack ht., m	Average stack dia., m	Average temp., °C	Average flow, Am^3/s	Average operating rate, Gg of metal charged per furnace per year
Pot furnace	110	14	0.85	133	6.24	9.03
Reverberatory furnace	48	26	1.07	116	10.2	35.8
Blast (cupola) furnace	36	29	0.98	81	10.5	15.4
Rotary reverberatory furnace	5	30	2.29	66	14.6	2.42

REFERENCES FOR SECTION 9.8.11

1. Assessment of Fugitive Particulate Emission Factors for Industrial Processes. U.S. Environmental Protection Agency. Publication No. EPA-450/3-78-107. September 1978.

2. Vandegrift, A. E., et al. Particulate Pollutant System Study, Volume III: Handbook of Emission Properties. U.S. Environmental Protection Agency. Publication No. APTD-0745. May 1971.

3. OAQPS Data File of Nationwide Emissions. U.S. Environmental Protection Agency, Office of Air Quality Planning and Standards. Research Triangle Park, NC. 1979.

4. Background Information for Proposed New Source Performance Standards, Volume 1: Main Text. U.S. Environmental Protection Agency. Publication No. APTD-1352a. June 1973.

5. Inspection Manual For Enforcement of New Source Performance Standards -- Secondary Lead Smelters. U.S. Environmental Protection Agency. Publication No. EPA-340/1-77-001. January 1977.

6. A Method for Characterizations and Quantifications of Fugitive Lead Emission from Secondary Lead Smelting, Ferroalloy Plants and Gray Iron Foundaries (Revised). U.S. Environmental Protection Agency. Publication No. EPA-450/3-78-003. August 1978.

7. Field Operations and Enforcement Manual For Air Pollution Control, Volume III: Inspection Procedures for Specific Industries. U.S. Environmental Protection Agency. Publication No. APTD-1102. August 1972.

8. Atmospheric Modeling Data from National Emission Data Systems (NEDS). U.S. Environmental Protection Agency, Office of Air Quality Planning and Standards. Research Triangle Park, NC. February 1979.

9. Technical Guidance for Control of Industrial Process Fugitive Particulate Emissions. U.S. Environmental Protection Agency. Publication No. EPA-450/3-7-010. March 1977.

9.8.12 Secondary Zinc Processing

Secondary zinc processing involves the use of one or more furnace recovery operations that process scrap zinc materials into usable zinc products. Zinc is separated from scrap that contains lead, copper, aluminum, and iron by carefully controlling the temperature in a sweating furnace and allowing each metal to be removed at its melting temperature. Further refining of the zinc can be performed in retort distilling or vaporization furnaces, where the vaporized zinc is condensed to pure metallic form. Zinc galvanizing is sometimes included as a secondary zinc process, even though this operation involves zinc consumption rather than zinc recovery. For purposes of this analysis, zinc galvanizing is not considered as a secondary zinc processing operation.

Nationwide particulate emissions in 1977 from distillation and sweating operations were estimated to be 1270 Mg.[1] A worst case estimate of secondary zinc industry process fugitive emissions in 1973 was calculated to be as high as 429 Mg.[2]

9.8.12.1 Process Description and Emissions. Secondary zinc processing basically involves three operations: pretreatment (primarily sweating), melting, and vaporization. Sweating is the scrap pretreatment method most often used; it involves furnace operations that separate metallic zinc from metals with higher melting points and other contaminants. Sweating can be accomplished by using reverberatory, pot, rotary, muffle, or electric arc furnaces. Higher melting materials are separated from the molten zinc, while impurities such as plastic and oil are volatilized. The molten zinc is then tapped (removed) from the furnace.

Sweating operations release air contaminants that consist mainly of smoke and metal fumes. The smoke results from incomplete combustion of scrap impurities such as oil and plastics, and the fumes consist primarily of volatilized and condensed zinc compounds. If the furnace is operated properly at low temperatures and the zinc does not reach a temperature much above 590°C, heavy fuming will not result.[3] Size data from sweating operations is sparse but it appears that the size distribution of the emitted particulate matter is somewhat dependent upon the composition of the materials charged to the furnace. The fumes generated during pot furnace sweating may have a geometric

mean size of less than 2 micrometers.[4] An analysis of a particulate emissions sample from the sweating of metallic scrap has shown 4 percent zinc chloride, 77 percent zinc oxide, 4 percent water, 4 percent other metal chlorides and oxides, and 10 percent carbonaceous materials.[5]

The recovered molten zinc from sweating operations can then be fed directly (or cast and then fed) to processing/melting furnaces or to a vaporization furnace. The molten zinc may also be analyzed chemically, and appropriate alloying materials added to obtain a desired composition prior to its being cast into salable ingots.

Skimmings scrap (residual scrap containing zinc oxide and zinc dross) is not sweated, but is typically crushed and screened to separate metallic constituents from pulverized nonmetallic materials. The metallics are then used in the melting or vaporization process. Skimmings may also be physically and chemically treated, resulting in the production of a $Zn(OH)_2$ compound which is further treated in a calcining furnace to produce zinc oxide. The zinc oxide, in turn, is collected in polyester bag filters for further processing. Collection of this material apparently poses no emissions problem.[4]

In the melting operation, zinc recovered from sweating and/or scrap zinc is fed into a pot, reverberatory, or electric induction furnace and melted. A fluxing compound is usually added to remove impurities. The metal can then be fed directly to a vaporization type furnace and cast into ingots; or the zinc can be chemically analyzed, brought into specification by the addition of alloying materials, and then cast into salable ingots.

9.8.12.2 Emission Characteristics and Applicable Control Technologies. Particulate emissions result from the melting operation when the charge contains organic material. Emissions can also be caused by fluxing, but fluxes are currently available whose use does not result in particulate emissions. Metal temperatures above 593°C will result in excessive zinc vaporization and the formation of particulate zinc oxide or zinc fumes. Normally, the zinc can be treated and poured at temperatures below 593°C.[3]

Zinc is vaporized and condensed in either a furnace (Belgian or distillation-type) or muffle furnace condensation system. In this operation, impure zinc metal scrap, molten or cast metal obtained from the sweating and/or melting operation, or a zinc oxide preparation, is charged into the

furnace. The charge is then heated indirectly (see retort and muffle furnace schematics, Figures 9.8.12-1, 9.8.12-2, 9.8.12-3), resulting in the formation of high purity vapors. The vapors are then condensed to form metallic zinc or oxidized in the muffle and retort furnaces to form high purity zinc oxide. The retort furnaces are operated on a batch basis while the muffle furnace can be operated continuously for several days.

Particulate matter is emitted from the retort furnaces when residues are removed and fresh batches are charged. These emissions consist mostly of zinc oxide, with aluminum, copper, and other metals also present; the particles range in size from 0.05 to 1.0 micrometers.[5] Zinc vapors, that leave the muffle furnace condenser, form zinc oxide and are collected in a product collection system. Average stack parameters for emission sources within the secondary zinc processing industry are summarized in Table 9.8.12-1.[6] Estimates of uncontrolled emission factors for various secondary zinc smelting sources are presented in Reference 7.

Fugitive emissions are produced in the skimming, crushing, and screening operations, as well as in the various furnace charging and tapping operations. In the zinc vaporization/condensation process, emissions can also result from condenser upset conditions and from leaks between the vaporization furnace and the condenser.

Sweat process emissions are alleviated by selection of processes that appear optimum for the type of scrap being treated and by application of established types of gas cleaning equipment. Afterburners are used to incinerate combustible material emitted from low temperature sweating furnaces. The incinerator exhaust, after being cooled, is then treated in a fabric filter. Design and operating characteristics of a fabric filter installed on a sweating operation and test results are shown in Table 9.8.12-2.

Fabric filters are also used to control particulate emissions from reverberatory and distillation retort furnaces. Experience in fabric filter applications indicates polyester fabric is the most acceptable bag material for distillation and sweating operations where the chloride concentration is not excessive. A maximum zinc chloride content of between 2 and 5 percent at an effluent temperature of 120°C (250°F) and a maximum air-to-cloth ratio of 0.6 to 0.3 is recommended.[4] By maintaining this temperature and a low

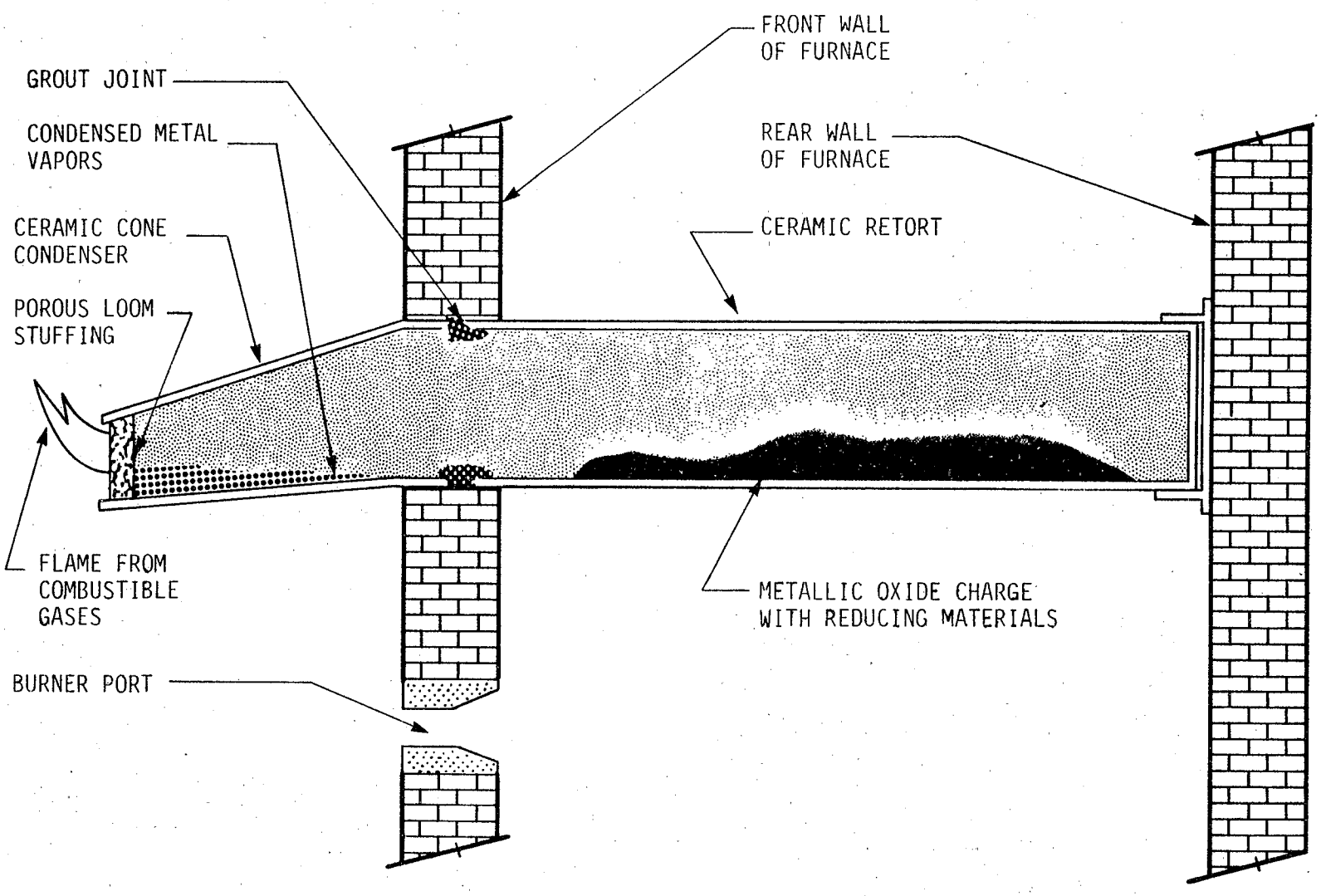

Figure 9.8.12-1 Diagram showing one bank of a Belgian retort furnace.[3]

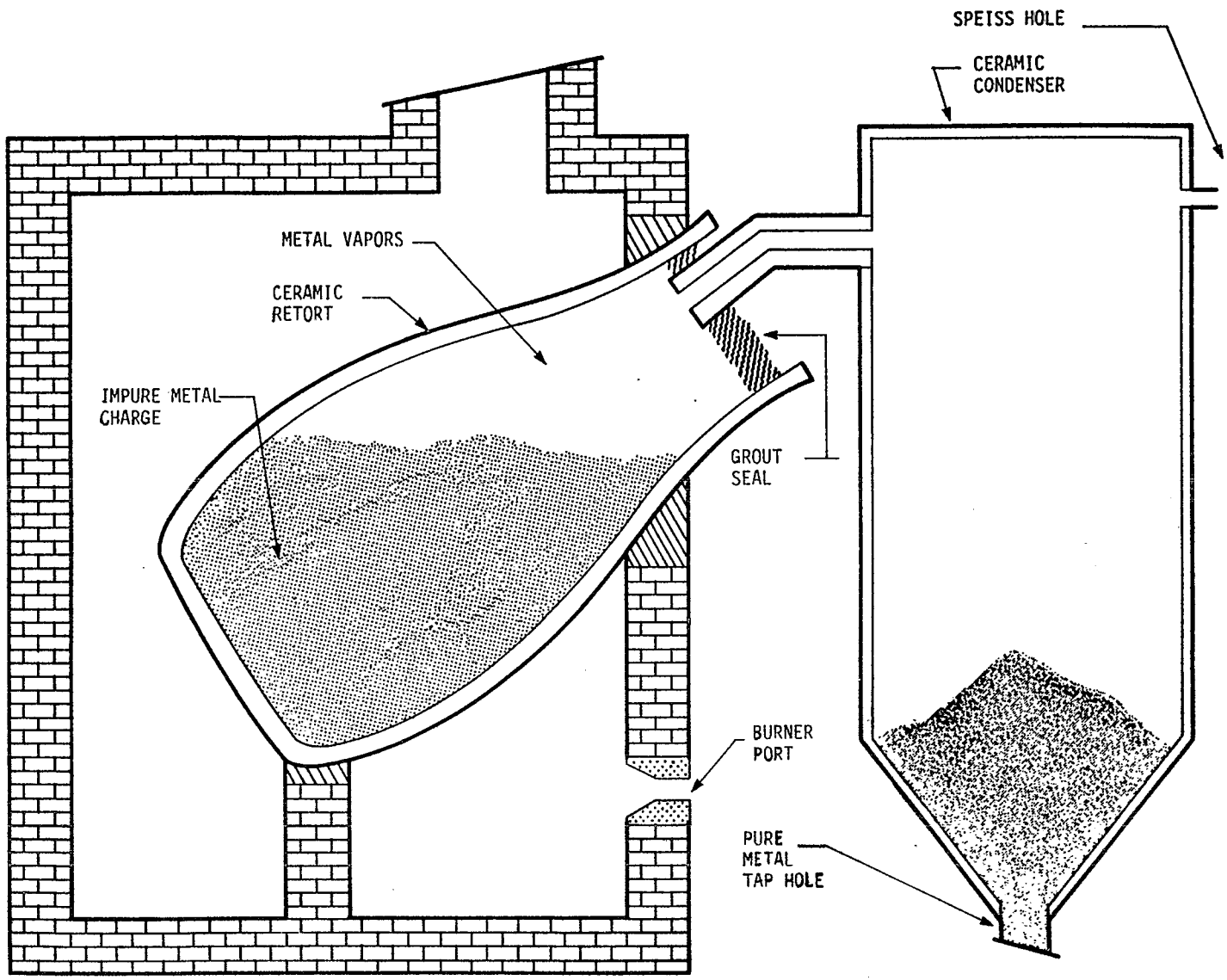

Figure 9.8.12-2 Diagram of a distillation-type retort furnace.[3]

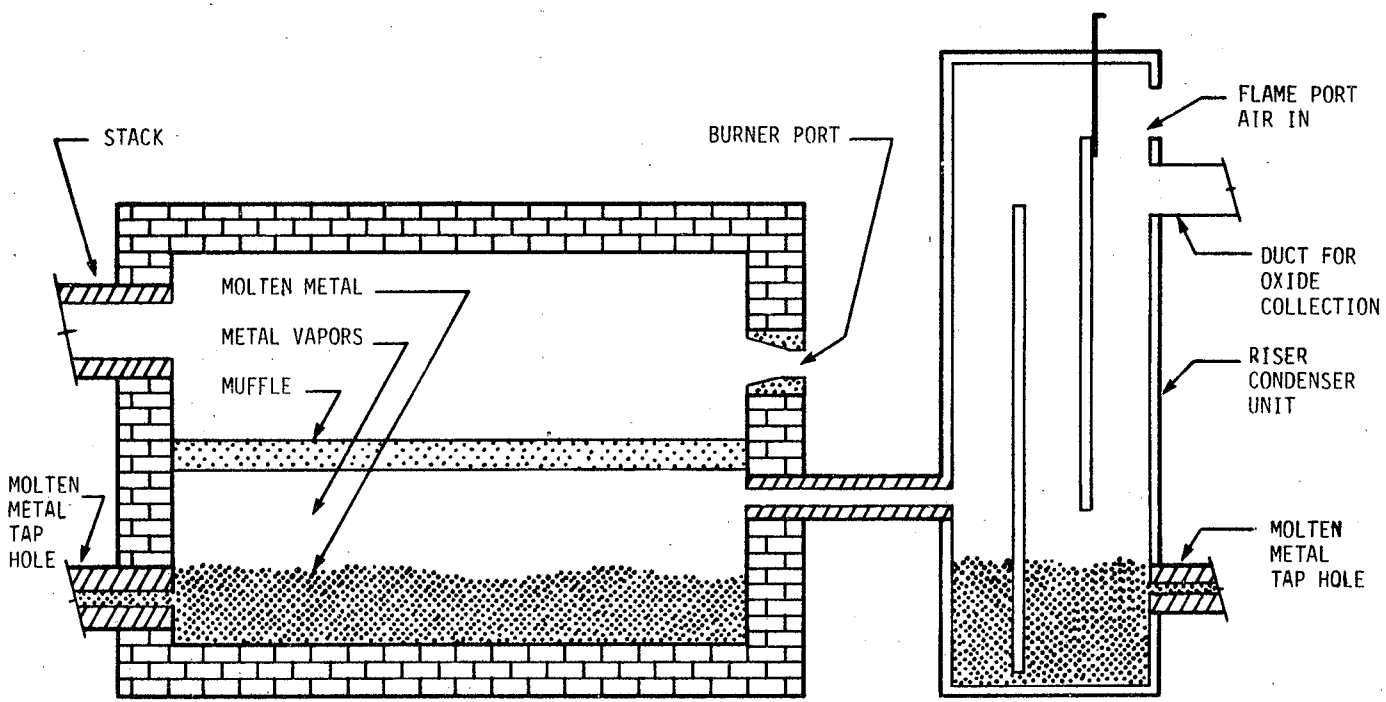

Figure 9.8.12-3 Diagram of a muffle furnace and condenser.[3]

Table 9.8.12-1. STACK PARAMETERS FOR EMISSION SOURCES WITHIN THE SECONDARY ZINC PROCESSING INDUSTRY[6]

Facility or operation	Nationwide number of facilities or operations	Average stack ht., m	Average stack diam., m	Average temp., °C	Average flow (ACFM) Am^3/s	Average operating rate Mg of Zn metal produced per year
Retort furnace	9	12	0.46	128	4.25	2.07
Horizontal muffle furnace	9	5	0.73	1054	3.19	3.62
Pot furnace	20	8	0.67	169	4.02	8.08
Kettle sweat furnace	12	16	1.28	123	3.37	2.34
Calcining kiln	6	49	1.92	286	57.3	27.9
Reverberatory sweat furnace	14	8	0.43	566	0.25	4.28

Table 9.8.12-2. ZINC SWEATING FURNACE CONTROL INFORMATION[3]

Furnace data	
Type of furnace	Reverberatory
Process weight, Mg/h	4.6
Material sweated	Zinc castings
Baghouse data	
Type of baghouse	Sectioned tubular
Filter material	Orlon
Filter area, m^2	482
Filter velocity, m/min	0.56
Precleaner	None
Dust and fume data	
Gas flowrate, Nm^3/min	
Baghouse inlet	715
Baghouse outlet	690
Average gas temperature, °C	
Baghouse inlet	88
Baghouse outlet	78
Concentration, g/m^3	
Baghouse inlet	0.143
Baghouse outlet	0.0054
Dust and fume emission, kg/h	
Baghouse inlet	6.1
Baghouse outlet	0.23
Control efficiency, %	96.3

percentage of chlorides in the particulate matter being collected, blinding of the bags and caking of the collected material due to deliquescence are prevented. The bags are satisfactorily cleaned by means of a pneumatic air shaker.[4]

Electrostatic precipitators (ESPs) have limited application for controlling emissions from sweating operations. The reason for this is that an ESP's efficient use is limited to a certain range of particle compositions and effluent temperatures. High zinc oxide concentrations and high temperatures can reduce the electrical conductivity and cause inefficient operation while high chloride concentrations cause excessive corrosion.[4]

A degree of particulate emissions reduction can be achieved by selecting specific processing procedures and furnaces. For example, scrap containing considerable organic material can be processed without flux in reverberatory furnaces, and the resulting sweated crude zinc alloy then distilled to obtain pure zinc. In this way, carbonaceous and chloride emissions are prevented and noncarbonaceous emissions (free of chlorides) that occur can be collected in conventional baghouses.[4]

Industrial process fugitive emissions can be controlled by improving operating procedures and by improving particulate capture/control methods. The use of properly designed hooding devices during the crushing, screening, charging, alloying, and tapping operations with an exhaust system capture velocity of about 0.5 to 1.0 meter/sec can effectively control fugitive emissions.[5] Improved maintenance and operating procedures can reduce fugitive leaks from vaporization/condensation operations and from equipment upsets and breakdowns. Maintaining zinc temperatures below 590°C will essentially eliminate fugitive zinc fume emissions during casting operations.[5]

REFERENCES FOR SECTION 9.8.12

1. OAQPS Data File of Nationwide Emissions. U.S. Environmental Protection Agency, Office of Air Quality Planning and Standards. Research Triangle Park, NC. 1977.

2. Assessment of Fugitive Particulate Emission Factors for Industrial Processes. U.S. Environmental Protection Agency. Publication No. EPA-450/3-78-107. September 1978.

3. Vandegrift, A. E., et al. Particulate Pollutant System Study, Volume III: Handbook of Emission Properties. Midwest Research Institute. Kansas City, MO. May 1971.

4. Secondary Zinc Industry Emission Control Problem Definition Study, Part I: Technical Study. U.S. Environmental Protection Agency. Research Triangle Park, NC. Publication No. APTD-0706. April 1971.

5. Technical Guidance for Control of Industrial Process Fugitive Particulate Emissions. U.S. Environmental Protection Agency. Publication No. EPA-450/3-77-010. March 1977.

6. Atmospheric Modeling Data from National Emission Data System (NEDS). U.S. Environmental Protection Agency, Office of Air Quality Planning and Standards. May 1979.

7. Source Category Survey: Secondary Zinc Smelting and Refining Industry. U.S. Environmental Protection Agency, Office of Air Quality Planning and Standards. Research Triangle Park, NC. Publication No. EPA-450/3-80-012. May 1980.

Page Intentionally Blank

9.9 PETROLEUM INDUSTRY

The petroleum industry extracts crude oil from production wells, refines the oil into more than 300 products, and then markets the products. The particulate matter emitted by this industry is produced almost exclusively by catalyst regeneration, coking operations, asphalt air blowing, and sludge incineration at the refineries. Some particles are also produced by process heaters, boilers, and flares. Emissions from these sources include catalyst fines, coke dust, sulfuric acid mist, asphalt aerosol, flyash, and soot. Many of the emissions are less than 10 micrometers in diameter.[1] An estimated 83 Gg of particulate matter was emitted by 266 refineries nationwide in 1977.[2,3] As of March 1979, there were 289 refineries in operation.[4] A flow diagram of a complex refinery is given in Figure 9.9-1.[5] Emissions control and stack parameter data for each of the particulate emission sources are summarized in Tables 9.9-1 and 9.9-2.[6]

9.9.1 Catalyst Regeneration Processes

Catalysts are used in many refinery processes such as fluidized catalytic cracking, reforming, hydrotreating, and alkylation. These catalysts need to be regenerated to remove coke deposits. Most processes require regeneration only periodically--anywhere from once per week to once every other year. A fluidized catalytic cracking (FCC) catalyst, however, needs to be regenerated continuously. Particulate emissions from regenerators result from the mechanical actions in the regenerator (catalyst attrition) and coke combustion.[1] Emissions from batch regenerators are not usually controlled; particulate emissions are not significant due to the infrequency of regeneration.[7] Therefore, this discussion will focus on controls for the continuous regenerators used on FCC units. Figure 9.9-2 shows a diagram of the fluid catalytic cracking process.

The catalyst used in fluidized catalytic cracking is usually an aluminosilicate powder or molecular sieve. The powder particles are typically between 40 and 80 micrometers in diameter.[1] Catalyst particles are emitted in the regenerator exhaust, despite the catalyst recovery cyclones located in the regenerator. More than 90 percent of the particles entrained in the regenerator exhaust are less than 44 micrometers in diameter and approximately 79 percent are less than 10 micrometers in diameter.[1,8] Some particles may

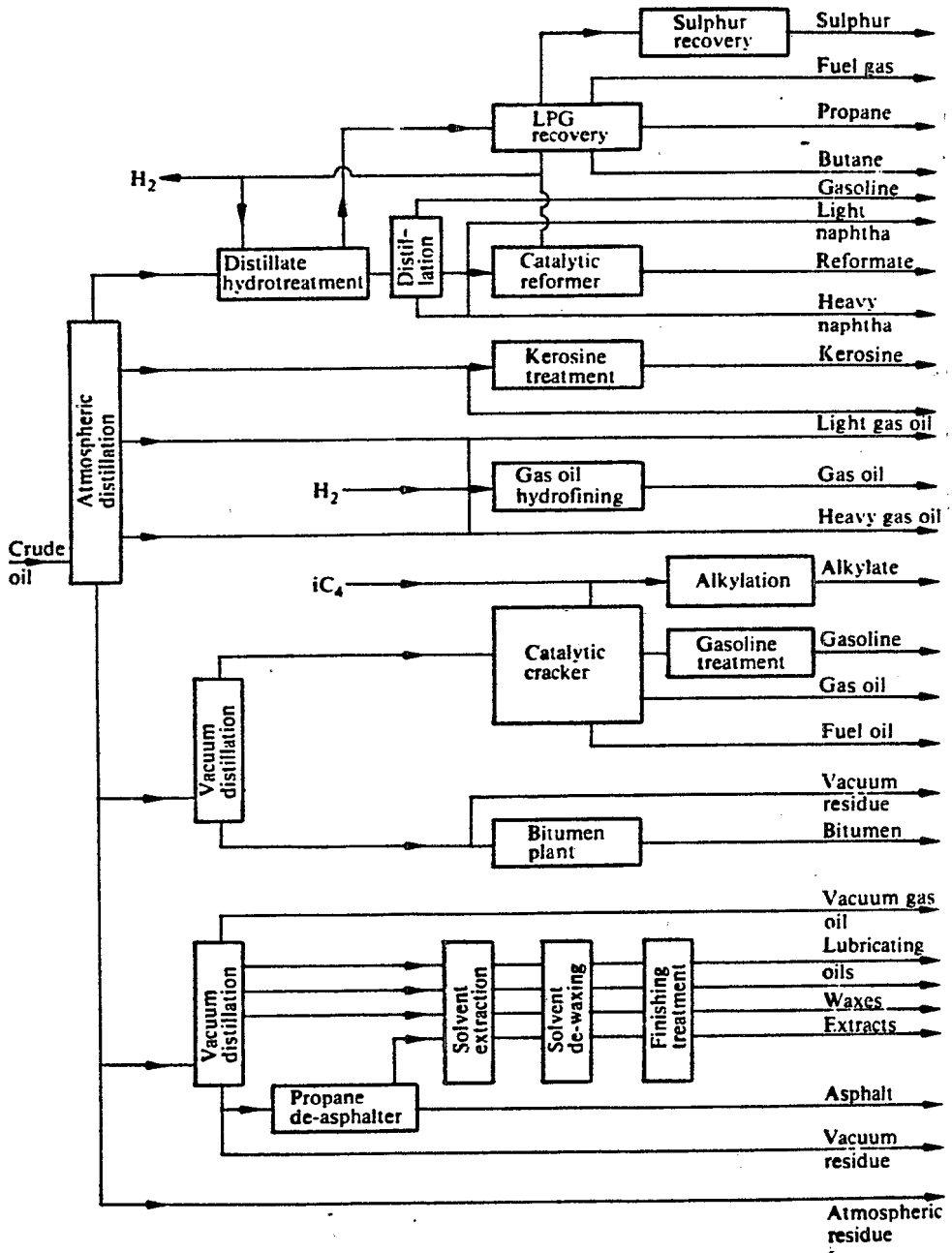

Figure 9.9-1 Plan of a complex refinery.[5]

Table 9.9-1. PETROLEUM INDUSTRY EMISSION SOURCES AND CONTROLS

Emission source	Particulate matter	Control device	Control efficiency	Reference
FCC unit catalyst regenerator	Catalyst fines, coke dust, ash	ESP following multistage cyclones	67-99.9 for particle size less than 40 micrometers	1, 8, 9
		Venturi scrubber	95	1
		Gravel bed filter	N/A	9
		Multiple tube swirl vane separator	99.5	9
Fluid coking	Coke dust, sulfuric acid mist	ESP	68-98	8
		Gravel bed filter	99.9	8
		Scrubber	N/A	8
		Cyclone	N/A	8
Delayed coking	Coke dust	Water washing	N/A	10 11
Asphalt air blowing	Tar, oil mist	Incineration	N/A	12
		Wet Scrubbers	N/A	12
Sludge incineration	Ash	Single plate impingement	90-98 for particles greater than 1 m	9
		Fabric Filter	"	9
		ESP	"	9

Table 9.9-2. PETROLEUM INDUSTRY STACK PARAMETERS[6]

Emission sources	Number of sources	Average stack height, m	Stack diameter, m	Average temperature, °C	Average gas flowrate, Am^3/s
Process heater - oil	214	10	0.6	193	1
Process heater - gas	710	10	0.5	183	1
Process heater - oil	721	34	1.8	324	1227
Process heater - gas	2347	27	1.5	341	832
Flare	148	30	0.6	571	363
Fluidized catalytic cracking	140	50	1.9	370	4172
Fluid coking - general	9	70	2.7	188	7886
Fluid coking - transport	3	0	0	77	0
Asphalt oxidizer	56	16	1.2	286	262

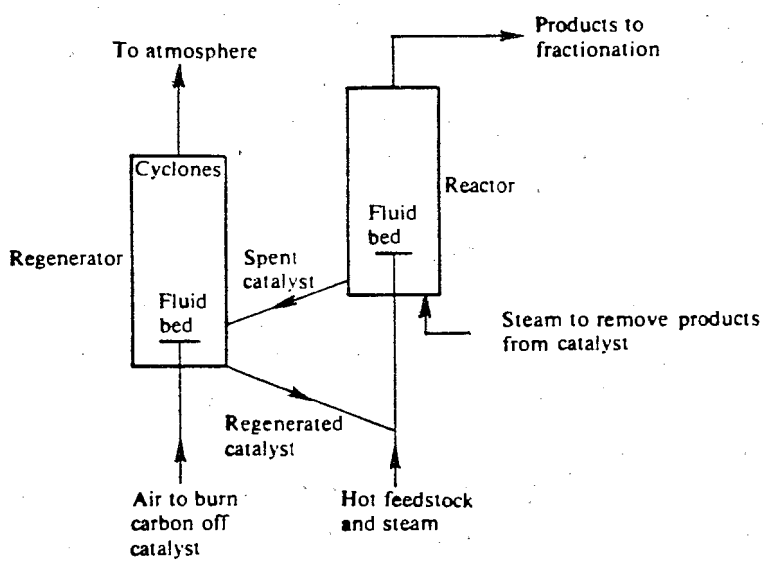

Figure 9.9-2 Fluid catalytic cracking process.[5]

also be emitted when the catalyst is transferred from the regenerator to the feed hopper. Particulate emissions from FCC units are on the order of 0.05 to 0.1 kg/Mg of catalyst recycled.[9]

9.9.1.1 Particulate Control Techniques. Several control options for fluidized catalytic cracking regenerators exist but the most frequently used controls are tertiary cyclones and electrostatic precipitators. In some cases, however, wet scrubbers and granular bed filters can also be used. The hot regenerator exhaust stream is usually passed through a heat recovery device, both to recover heat and to reduce the gas temperature to the control device inlet. Fluidized catalytic cracking regenerators are typically followed by CO waste heat boilers. Cyclones applied to this source are only about 85 percent efficient in removing the 10 micrometer diameter particles that predominate in regenerator exhaust gas.[9] Since cyclone collection efficiency decreases exponentially with particle size, cyclones have low efficiency for collecting particles less than 5 micrometers in diameter.[8] Therefore, tertiary cyclones are usually supplemented with an electrostatic precipitator.[9]

Electrostatic precipitators operating on fluidized catalytic cracking catalyst regenerators have efficiencies that range from 67 to 99.8 percent but generally average 99.5 percent removal of the particles that escape the cyclones.[1,8] The efficiency varies with particulate loading and dust resistivity.[8] The ESP may be located either ahead of or after the CO boilers. When the ESP is installed between the regenerator and the CO boiler, a smaller ESP can be used since the additional combustion gas from the boiler will not contribute to the gas volume being treated. In addition, particle resistivity tends to be lower, and collection therefore easier, than when the ESP is located downstream of the CO boiler. This lower particle resistivity results from the higher gas temperature, increased coke content of the particulate matter, and presence of natural "conditioning agents" such as ammonia and sulfur trioxide in the regenerator exhaust as compared to the CO boiler exhaust. However, a heat exchanger is necessary between the regenerator and the ESP to lower the gas temperature to 260 to 315°C.[1] Ammonia injection can be used to increase particle resistivity when the ESP is located downstream of the CO boiler.[1]

An alternative to the use of tertiary cyclones and ESPs is the Shell process. This process uses a centrifugal separator of the multiple-tube swirl vane type, and is followed by either a baghouse or wet scrubber. The separator has been shown to operate with an efficiency of 99.5 percent for 10 micrometer particles.[9] Additionally, a turbo-expander may be operated in conjunction with the separator to recover some power from the gas stream. Another control option receiving recent application for reducing particulate emissions from catalyst regenerators is the granular bed filter.[9] Catalyst-laden gas is passed through a chamber containing granular sand as the filter media. The media is cleaned periodically by a reverse air pulse.

The catalyst solids collected in the particulate control equipment are generally inert and suitable for disposal by landfill.[9] Energy requirements for operating an ESP range from 35 kVA to 140 kVA, depending on the size of the control device. Generation of the electric field in the ESP requires approximately 10 to 15 kW per 1000 m^3; the forced-draft fans needed to overcome pressure losses in the ESP use about 10 kW per 1000 m^3, assuming a pressure loss of 125 Pa.[5]

9.9.2 Coking Processes, Emissions, and Control Techniques

In coking operations, the residual oil bottoms from the vacuum distillation tower are used to produce coke and additional feedstock for catalytic cracking and hydrocracking. The two coking processes used for this purpose are delayed coking and fluid coking.

In delayed coking, the older and more commonly used process, residual oil is cracked as severely as possible in a single pass heater to form a heavy liquid stream and light hydrocarbon gas. The liquid stream is placed in a coking drum, and the gas is sent on for further processing. The coker drums are decoked once every 24 hours by drilling a hole through the coke and hydraulically removing the coke from the drum. In fluidized coking, coke is built up on a fluidized pellet bed. Steam is injected into the bottom of the coker to fluidize the bed, and when the coke particles are large enough, they are removed. A flow schematic of the fluid coking process is presented in Figure 9.9-3. While the delayed coker drums are being decoked, particulate emissions in the form of coke dust are produced. Sulfuric acid, with droplet sizes ranging from 0.5 to 3 micrometers in diameter, is emitted along with coke dust from the fluidized coker exhaust stream.[8]

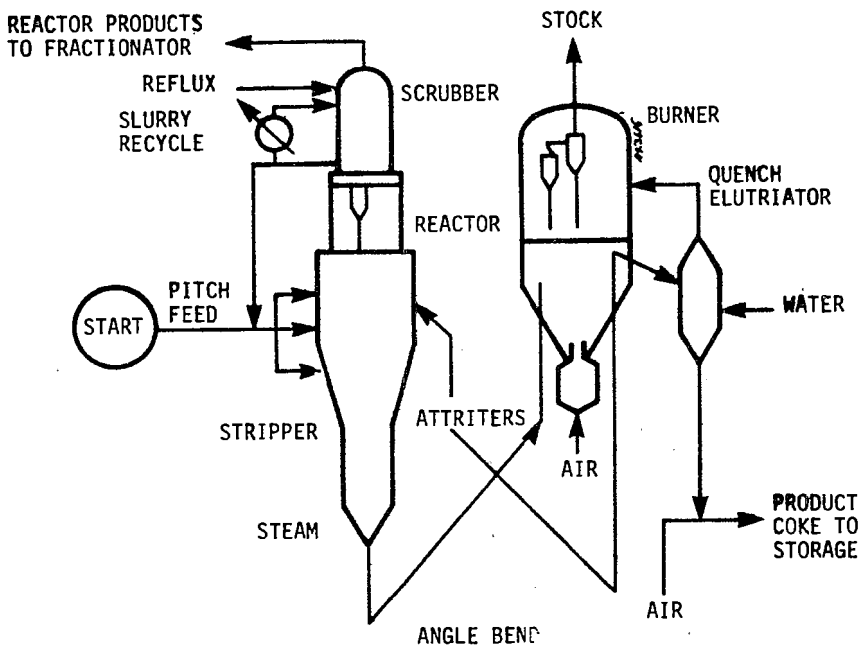

Figure 9.9-3 Flow diagram of modern fluid coking unit.[10]

Product recovery cyclones collect coke particles from the fluidized coker exhaust stream. These cyclones may be followed by a wet scrubber, ESP, or fabric filter. Emissions from delayed coking are primarily fugitive in nature and can be minimized by washing down the coking equipment.[11] This procedure, however, produces a wastewater stream that requires treatment. Minimal data are available on coking emissions and appropriate controls.

9.9.3 Air Blowing Operations, Emissions and Control Techniques

Air is blown countercurrent to an asphalt stream in a packed tower to harden the asphalt and increase its melting point. This process emits oil and tar aerosol as well as malodorous gaseous pollutants. Since the hot gas blowing is exothermic, a steam quench stream is used to control the temperature.[12] Aerosol emissions are controlled either by incineration or wet scrubbing.

Existing fireboxes are usually used to incinerate asphalt air-blowing emissions. Such a system is capable of handling emissions from an air blowing unit producing 16 m^3 of asphalt per 12-hour day.[12]

Wet scrubbers employed in this application frequently use a sea water scrubbing solution. The disadvantage of using scrubbers is that a high liquid-to-gas ratio, on the order of 13.4 L/Nm^3, is needed for high efficiency. In addition, the wastewater produced may overload the refinery wastewater treatment system and, if the wastewater is exposed to the atmosphere, vaporized hydrocarbons will be emitted.[12]

9.9.4 Sludge Incineration, Emissions, and Control Techniques

Oily sludges produced by refinery processes are frequently atomized and incinerated in a multiple-hearth or a fluidized-bed incinerator. The combustible fraction is burned, and the noncombustible fraction becomes entrained in the exhaust as flyash. Uncontrolled emissions from fluidized bed incinerators are almost 10 times greater than uncontrolled emissions from multiple-hearth incinerators (18 g/Nm^3 and 2 g/Nm^3, respectively).[9] Scrubbers, baghouses, and electrostatic precipitators are all effective in reducing incinerator emissions. (Section 9.3 presents a detailed discussion on incinerators.)

Venturi or impingement scrubbers, usually followed by a cyclone, have a combined scrubber/cyclone efficiency of 90 to 98 percent for particles

greater than 1 micrometer in diameter.[9] Fabric filters can achieve an efficiency of approximately 99 percent.[9] However, the capital costs for filters are almost three times the cost for a scrubber, and maintenance costs are slightly more expensive. Also, care must be taken in operating fabric filters to ensure that ignited ash from the incinerator does not reach the baghouse.

Refinery sludges may be disposed of via landfills or lagooning, or conditioned for use as fertilizer rather than being incinerated. Some types of sludge need chemical treatment to render them suitable for landfill. One such chemical treatment involves a three-phase reaction which traps the sludge in a chemical matrix, forming a pseudo-mineral material.[9]

9.9.5 Process Heater, Boiler, and Flare Emissions and Control Techniques

Particulate emissions from process heaters, boilers, and flares are caused by incomplete combustion. Proper design and maintenance of these devices to ensure complete combustion can reduce the emissions. Since the concentration of particulate matter emitted from process heaters is low, there is generally no incentive to use external control devices.[7,9,13] Process modifications and changes in the combustion parameters (fuel, residence time, excess air, burner design) are implemented to reduce emissions. (For more details, see Section 9.2.).

REFERENCES FOR SECTION 9.9

1. Hardison, L. C., and C. A. Greathouse. Air Pollution Control Technology and Costs in Nine Selected Areas. U.S. Environmental Protection Agency. Publication No. PB-222-746. September 1972.

2. OAQPS Data File of Nationwide Emissions. U.S. Environmental Protection Agency, Office of Air Quality Planning and Standards. Research Triangle Park, NC. February 1979.

3. Cantrell, A. Annual Refining Survey. The Oil and Gas Journal. Tulsa, OK. March 28, 1977.

4. Cantrell, A. Annual Refining Survey. The Oil and Gas Journal. Tulsa, OK. March 26, 1979.

5. Formica, P. N. Controlled and Uncontrolled Emission Rates and Applied Limitations for Eighty Processes. U.S. Environmental Protection Agency. Publication No. EPA-450/3-77-016. September 1976.

6. Atmospheric Modeling Data from National Emission Data System (NEDS). U.S. Environmental Protection Agency, Office of Air Quality Planning and Standards. Research Triangle Park, NC. May 1979.

7. Parker, A. Industrial Air Pollution Handbook. McGraw-Hill. New York, NY. 1975.

8. Manual on Disposal of Refinery Wastes - Volume on Atmospheric Emissions. American Petroleum Institute, Division of Refining. Publication No. 931. Washington, DC. September 1965.

9. Cavanaugh, E. C., et al. Environmental Problem Definition for Petroleum Refineries, Synthetic Natural Gas Plants, and Liquified Natural Gas Plants. U.S. Environmental Protection Agency. Publication No. EPA-600/2-75-068. November 1975.

10. Laster, L. L. Atmospheric Emissions from the Petroleum Refining Industry. U.S. Environmental Protection Agency. Publication No. EPA-650/2-73-017. August 1973.

11. Sims, A. V. Field Surveillance and Enforcement Guide for Petroleum Refineries. U.S. Environmental Protection Agency. Publication No. EPA-450/3-74-042. July 1974.

12. Cavanaugh, E. C. Control Techniques for Volatile Organic Emissions from Stationary Sources. U.S. Environmental Protection Agency. Publication No. EPA-450/2-78-022.

13. Dana, M. T., et al. Particulate and SO_2 Emissions from Process Heater at Shell and Texaco Refineries. Anacortes, WA. Battelle, Pacific Northwest Laboratories. September 1975.

Page Intentionally Blank

9.10 FOREST PRODUCTS INDUSTRY

The production of pulp and building products from wood is categorized as the forest products industry. This section presents particulate emissions and control information for the kraft and sulfite pulping industries as well as for emission sources which are found in the manufacturing processes for plywood and veneers. Most forest products production facilities supply a significant portion of their in-plant energy needs through the use of waste wood-fired industrial boilers; consequently, these boilers are quite prevalent throughout pulp mills and plywood plants. Emissions and applicable control technologies for waste wood-fired boilers are characterized in Section 9.2.

9.10.1 Kraft Pulping

Currently there are about 120 kraft (sulfate) pulp mills located in 28 states throughout the United States. The areas of greatest density are the Southeast, the Northwest, and the Northeast, in descending order.[1] In 1978, the capacity of these mills in the United States was 34.7 Tg.[2] The average kraft pulp mill produces 700 Mg/day of pulp.[1] Particulate matter emitted from the manufacture of kraft pulp amounted to 222 Gg in 1977 on a nationwide basis.[2]

9.10.1.1 Process Description. The process for producing kraft pulp from wood is shown in Figure 9.10-1.[3] In the process, wood chips are cooked (digested) at elevated temperature and pressure in "white liquor", a water solution of sodium sulfide (Na_2S) and sodium hydroxide (NaOH). The white liquor chemically dissolves lignin (the material that bonds the cellulose fibers together) from the wood.

When cooking is completed, the contents of the digester are released into the blow tank. Here, the major portion of the spent cooking liquor, which contains the dissolved lignin, is drained and the pulp enters the initial stage of washing. The pulp is then filtered from the spent cooking liquor, washed, and, in some mills, bleached before being formed, pressed, and dried into a marketable product.

It is economically attractive to recover both the inorganic cooking chemicals and the heat content of the "black liquor" (a combination of spent cooking liquor and dissolved lignin), which is separated from the cooked

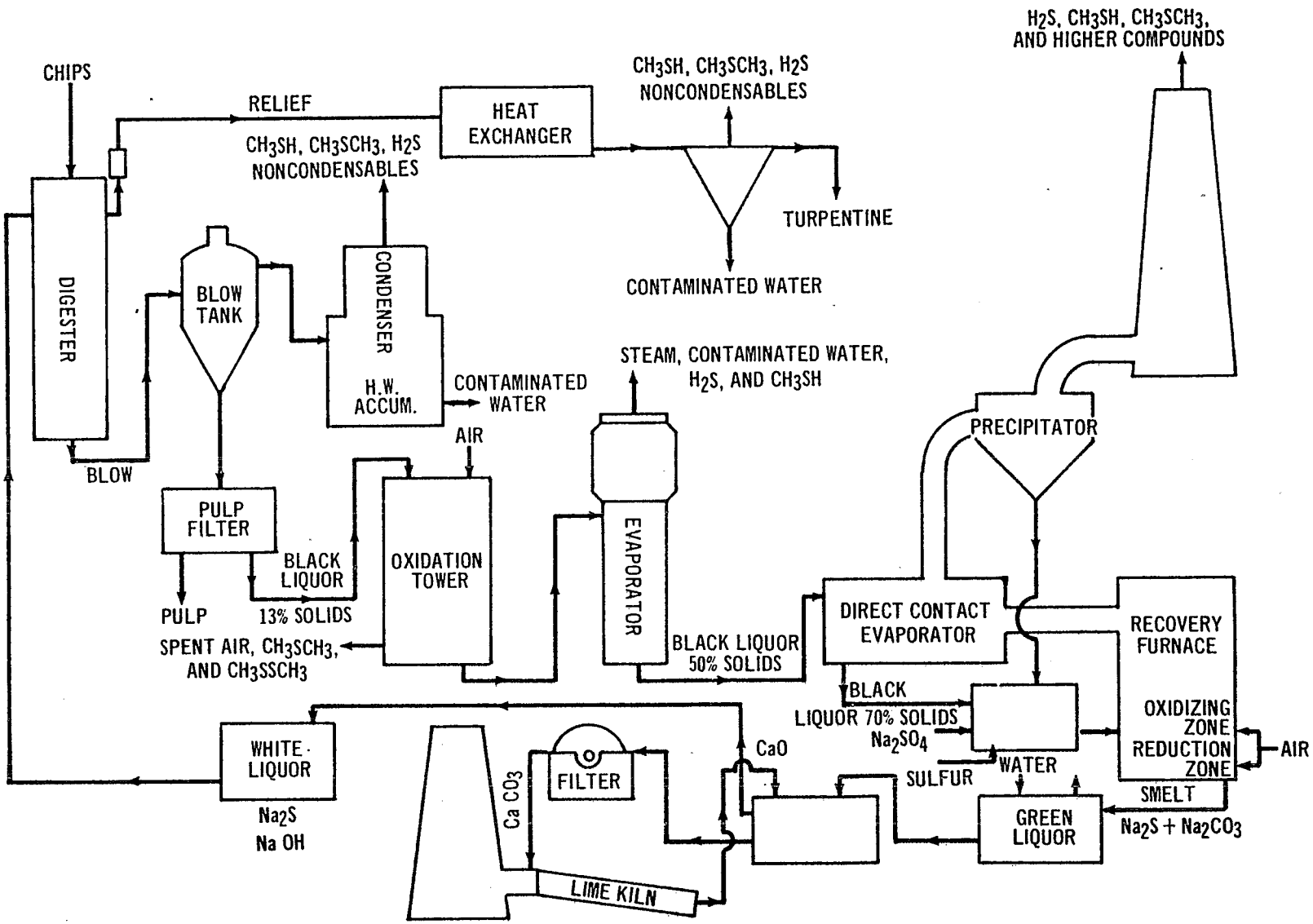

Figure 9.10-1 Typical kraft sulfate pulping and recovery process.[3]

pulp. The balance of the process is designed to recover both cooking chemicals and heat. Recovery is accomplished by concentrating the liquor in multiple-effect evaporators to about 55 to 70 percent solids, and then feeding the liquor to a recovery furnace where combustion and chemical recovery takes place.

Initial concentration of the weak black liquor, which contains roughly 15 percent solids, occurs in the multiple-effect evaporator. Here process steam is passed countercurrent to the liquor in a series of evaporator tubes that increase the solids content to 40 to 55 percent. The next step involves the recovery furnace system.

There are two principal types of recovery furnace systems in use in the industry: the direct-contact evaporator system (Figure 9.10-1), and the newer indirect-contact or "low-odor" system (Figure 9.10-2). About 75 percent of the new furnaces that have been installed in the last 5 years are indirect-contact systems.[1] Combustion of the wood lignin dissolved in the black liquor provides heat for generating process steam and converting sodium sulfate (Na_2SO_4) to sodium sulfide (Na_2S). To make up for chemicals lost in the operating cycle, salt cake (sodium sulfate) is usually added to the concentrated black liquor before it is sprayed into the furnace. The inorganic compounds in the black liquor fall to the bottom of the furnace during combustion and are known as "smelt."

The smelt, consisting of sodium carbonate (Na_2CO_3) and sodium sulfide, is dissolved in water to form green liquor, that is transferred to a causticizing tank, where quicklime (CaO) is added to convert the sodium carbonate to sodium hydroxide. Formation of the sodium hydroxide completes the regeneration of white liquor, which is returned to the digester. A calcium carbonate mud precipitates from the causticizing tank and is calcined in a kiln to regenerate quicklime.

Many mills need more steam for process heating, product drying, and generating electric power, than can be provided by the recovery furnace alone. Thus, conventional industrial boilers that burn coal, oil, natural gas and, in many cases, bark and wood waste are commonly employed. Process descriptions and control techniques used to control particulate emissions from these sources are discussed in Section 9.2.

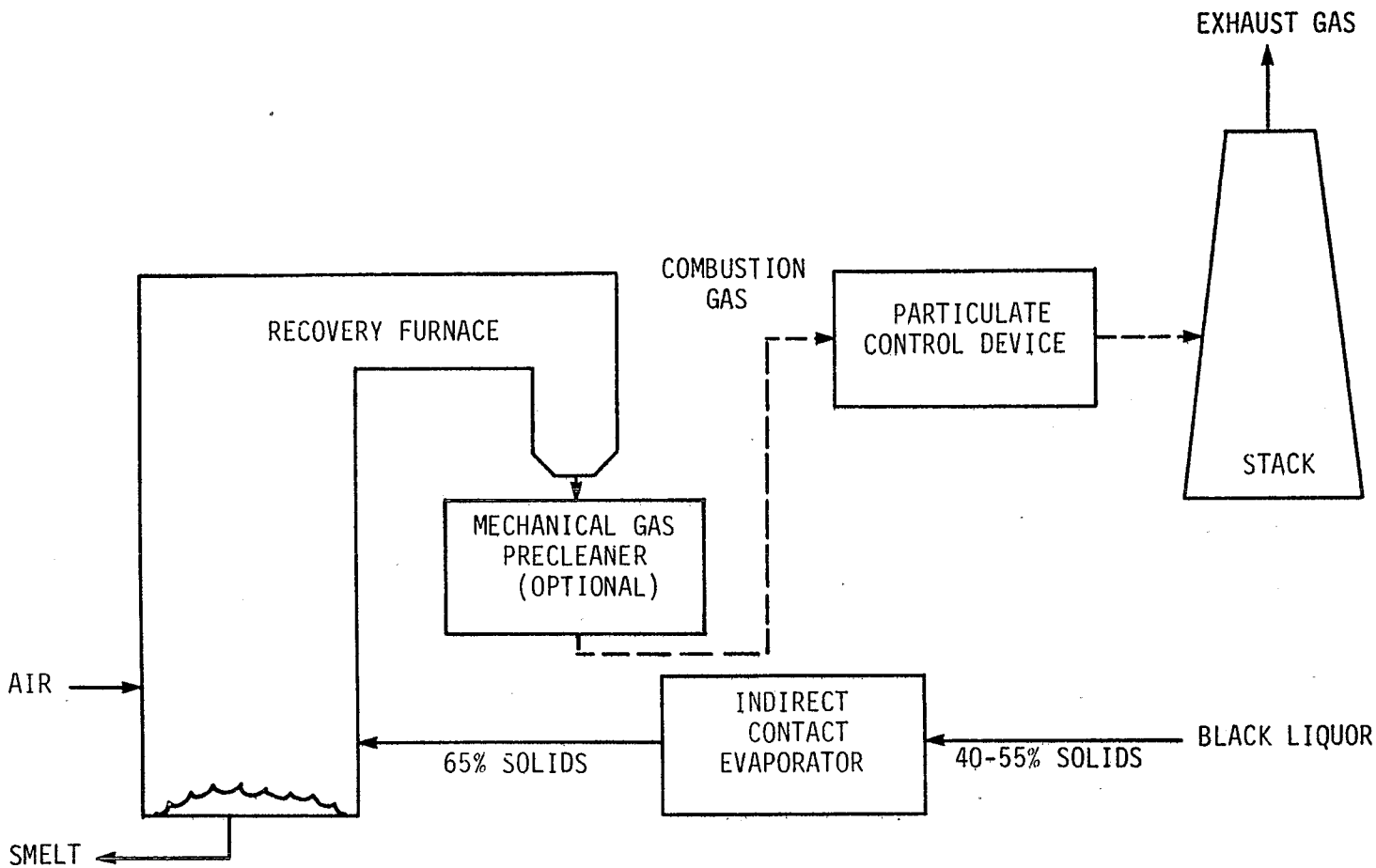

Figure 9.10-2 Indirect-contact recovery furnace system.[1]

9.10.1.2 Emission Characteristics and Applicable Control Technologies. Particulate emissions from the kraft process occur primarily from the recovery furnace, lime kiln, and smelt dissolving tank. These emissions consist mainly of sodium salts but include some calcium salts from the lime kiln. The dust collected in the kraft industry, especially from indirect-contact recovery systems, is more corrosive and sticky than that encountered in other industries.[1] This leads to some special problems with the particulate emission control equipment. Recovery furnace exhaust gases and particulate emissions have different characteristics depending on whether they are generated from a direct-contact (conventional) or an indirect-contact (low-odor) system, as shown in Table 9.10-1.[4] The typical size distribution of particulate matter produced by an indirect-contact recovery boiler is given in Table 9.10-2.[5] For a direct contact recovery boiler, the particle mass mean diameter may vary from 1 to 7 micrometers.[5,6]

The recovery furnace, lime kiln, and smelt dissolving tank are the primary sources of particulate emissions to which control devices are applied. ESP and scrubber systems are employed on recovery boilers, with ESP systems being used most frequently. Lime kilns generally utilize scrubber systems, but occasionally ESP systems are used; demister pads and other low energy scrubber systems are generally applied to control particulate emissions from smelt dissolving tanks. Fabric filters are not used in kraft mills because of the high moisture content of the exhaust gases and the fact that mechanical collectors are not efficient enough by themselves, due to the size distribution of the particulate matter, to provide the degree of control required.

9.10.1.2.1 Recovery boilers. Application and design of ESP systems for recovery boiler emission control depends on whether the system is to be applied to a recovery system that uses a direct-contact or an indirect-contact evaporator. For a recovery system using a direct-contact evaporator, the evaporator itself may serve to reduce the mass of particulate emissions by as much as 50 percent.[1] This, along with the fact that the particles emitted by a low-odor recovery boiler are generally smaller and less dense than particles emitted by a direct-contact recovery boiler, means that ESP systems for indirect-contact evaporators must be designed with more conservative sizing estimates. Table 9.10-3 lists the design parameters for a typical ESP applied to an indirect-

Table 9.10-1. PARTICULATE PROPERTY VALUES FROM CONVENTIONAL AND LOW-ODOR RECOVERY PROCESSES[4]

	Conventional	Low-odor
Temperature, K	410-435	445-505
Moisture content, percent	30	7-20
Particle size, micrometers	6-10	Less than 6
Density, kg/m^3	320-400	80-160
Tenacity	Reasonable	Difficult
Resistivity	Low	High
Sulfur content	Low	High

Table 9.10-2. TYPICAL PARTICLE SIZE DISTRIBUTION FOR INDIRECT-CONTACT RECOVERY BOILER[5]

Size interval, micrometers	Percent by weight in size range, %
Greater than 4.08	19.8
2.40-4.08	7.6
1.62-2.40	20.3
0.89-1.62	26.1
0.51-0.89	13.6
Less than 0.51	13.2

Table 9.10-3. TYPICAL INDIRECT-CONTACT KRAFT RECOVERY BOILER ELECTROSTATIC PRECIPITATOR SYSTEM DESIGN PARAMETERS[7]

Compartments	2
No. of fields	6 - 8
Collection plate area	1.2 - 1.5 m^2/Am^3 per min
Residence time	Minimum 10 secs
Gas velocity	Maximum 1.1 m/s
Power input	40 - 90 watts/1000 Am^3/min
	700 - 900 ma/1000 Am^3/min
	164 - 490 ma/1000 m electrode
Electrode rappers	550 - 1220 m/unit
Collection plate rappers	140 - 230 m^2/unit
Rake speed	2 - 3 cm/s
Rake torque	Minimum 75 Nm/m^2 (60 in-lbs/ft^2)
Screw speed	20 - 40 rpm
Screw torque	Minimum 55 Nm/m (150 in-lbs/ft)
Dust density	80 - 130 kg/m^3
Inlet concentration	11 - 18 grams/Nm^3
Dust volume	1.6 - 3.7 m^3/Mg of pulp
Dust compartment depth	1.8 - 3 m
Efficiency	99.5 - 99.8 percent removal by weight

contact recovery boiler.[7] Further information on the design parameters for ESP systems may be found in References 5, 8, 9 and 10.

Problems encountered in applying ESP systems to recovery boilers include corrosion, plugging, and wire breakage.[1] These problems are apparently due to operating the equipment at conditions for which it was not designed (i.e., higher gas volumes, higher inlet loadings, or lower inlet temperatures). In order to prevent corrosion, the manufacturers install insulation or heated shells to maintain the gas temperature above the gas dew point throughout the precipitator.

Scrubbers applied to kraft recovery boilers are generally of the venturi type, and are multiple stage (i.e., venturi scrubbers connected in series). These systems are not widely used, and removal efficiencies as high as 95 percent by weight are obtainable with pressure drops around 3 kPa.[11]

9.10.1.2.2 Lime kilns. Wet scrubbers are frequently applied to lime kilns, with venturi and impingement designs being the most prevalent. Typical operating characteristics of particulate liquid scrubbers on kraft lime kilns are summarized in Table 9.10-4.[12,13] Average collection efficiencies for venturi and impingement scrubbers range from 92 to 95 percent removal by weight.[14]

9.10.1.2.3 Smelt dissolving tanks. Showered mist eliminators are used almost exclusively on smelt dissolving tanks. Showered mist eliminators consist of fine wire pads approximately 30-cm thick. Removal efficiencies are roughly 70 to 80 percent by weight.[1,12] Demister pads used in series with a packed tower or scrubber attain efficiencies of 92 to 96 percent.

The effect upon ambient air quality in the vicinity of a kraft mill utilizing the above particulate control technologies is discussed below. Ambient concentrations of particulate matter resulting from the implementation of alternate levels of control are presented in Table 9.10-5. The following assumptions were applied in making the calculations:

- There are no significant seasonal or hourly variations in emission rates for these plants.
- The plants are located in flat or gently rolling terrain.
- The meteorological regime is unfavorable to the dispersion of effluents. This assumption introduces an element of conservatism into the analysis.
- An average plant size of 910 Mg/day was used.

Table 9.10-4. OPERATING CHARACTERISTICS OF PARTICULATE LIQUID SCRUBBERS ON KRAFT LIME KILNS[12,13]

Parameter	Scrubber type	
	Venturi	Impingement
Liquid-to-gas ratio, l/m^3	1.73 - 3.21	0.54 - 2.0
Slurry solids, % by wt	10 - 30	1 - 2
Pressure drop, kPa	2.5 - 3.75	1.25 - 1.75

Table 9.10-5. ESTIMATED IMPACT OF KRAFT PULP MILL PARTICULATE MATTER EMISSIONS UNDER NON-DOWNWASH ASSUMPTION (910 Mg PER DAY KRAFT PULP MILL)[1]

Control alternative	Averaging time	Maximum combined concentration, g/m^3	Contribution of each source,[a] $\mu g/m^3$ RF	SDT	LK
1[b]	24	9.7	Neg.	1.8	7.9
	annual	2.2	0.2	0.4	1.6
2[c]	24	5.1	Neg.	1.1	4.0
	annual	1.1	0.1	0.2	0.8
3[d]	24	2.5	Neg.	1.1	1.4
	annual	0.6	0.1	0.2	0.3

[a] RF = Recovery Furnace
SDT = Smelt Dissolving Tank
LK = Lime Kiln
Neg. = Negligible

[b]Alternative number 1 has the following control techniques:
- o Recovery Furnace - 99.9 percent ESP for particulate control.
- o Smelt Dissolving Tank - Demister.
- o Lime Kiln - 3.75 kPa venturi scrubber.
- o Brown Stock Washer Systems - No control.
- o Black Liquor Oxidation System - No control.
- o Condensate Stripper System - Incinceration.

[c]Alternative number 2 consists of the following control techniques:
- o Recovery Furnace - 99.9 percent ESP plus process control; noncontact evaporation.
- o Smelt Dissolving Tank - Scrubber plus use of clean water (process control).
- o Lime Kiln - 7.5 kPa venturi scrubber with caustic addition to scrubber water plus process controls.

[d]Alternative number 3 is identical to number 2 except that the venturi scrubber used for control of particulate emissions from the lime kiln is replaced with a high efficiency electrostatic precipitator.

- There is no aerodynamic downwash (interference of the stack plume by a natural or manmade obstacle resulting in increased localized concentration of the pollutants being emitted).

9.10.1.3 Particulate Emissions Data.[1] Emission data presented here are the results of tests conducted by EPA at 12 kraft pulp mills. These data represent 19 particulate tests performed to justify new source performance standards for kraft pulp mills. Eight emission tests for particulates were performed on seven recovery furnaces and seven lime kilns; five smelt dissolving tanks were also tested. Opacity readings were taken during particulate tests on four stacks at three recovery furnaces and on three smelt dissolving tank stacks and also during two tests on one lime kiln. These opacity readings and any correlations to emissions are available in Reference 1. Additional data obtained from various kraft mills, state air pollution control agencies, and other sources are also presented where pertinent.

9.10.1.3.1 Recovery furnace. Five recovery furnaces were tested by EPA. Three of the furnaces had direct-contact evaporators; the other two furnaces were indirect-contact (no direct-contact evaporator) type furnaces. The particulate emissions for the furnaces tested are shown in Figure 9.10-3. Data obtained from the operators of mills with several of the furnaces tested by EPA are also presented in Figure 9.10-3 for comparison purposes.

9.10.1.3.2 Smelt dissolving tanks. Four smelt dissolving tanks were tested by EPA. The data from these tests are presented in Figure 9.10-4. Monthly data obtained from a state agency on two of the smelt tanks are also presented.

9.10.1.3.3 Lime kilns. Particulate data obtained on four lime kilns tested by EPA are presented in Figure 9.10-5. Data obtained by the mills and state agencies are also presented. The particulate emissions from each lime kiln are controlled by a venturi scrubber.

Testing was performed on more than one type of fuel on several of the lime kilns, since the results of the testing on lime kiln K indicated that the controlled emissions depended on the type of fuel used. The difference in the controlled particulate levels when using No. 6 oil and natural gas seems to be the result of the added particulates produced by inefficient combustion of No. 6 oil.

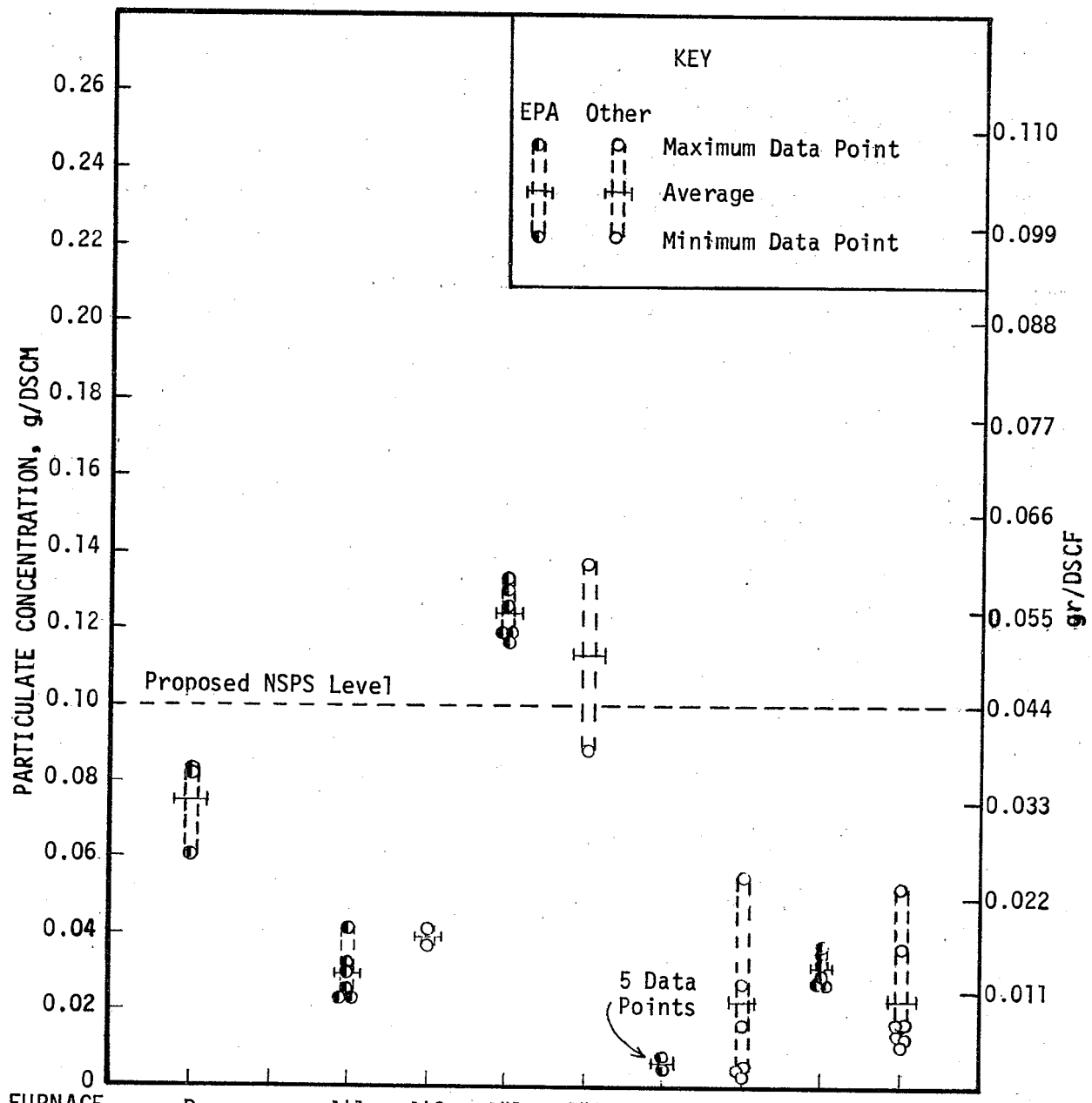

IC-Indirect Contact

DC-Direct Contact

P-Electrostatic Precipitator

Figure 9.10-3 Particulate concentrations in control systems exhaust from kraft recovery furnaces.[1]

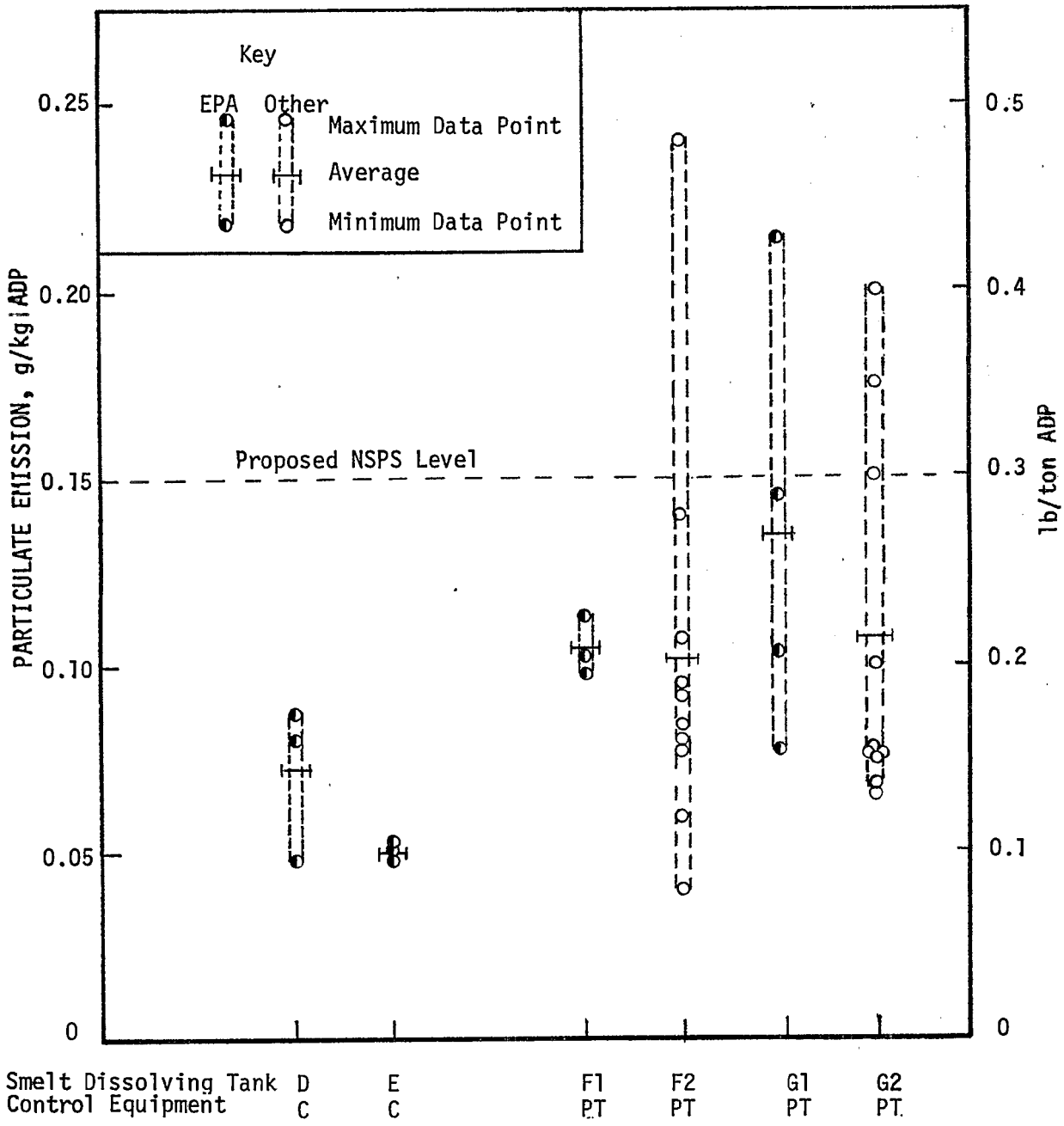

PT-Packed Tower

C-Cyclonic Scrubber

Figure 9.10-4 Particulate emissions in control system exhaust from smelt dissolving tanks used in the kraft pulping industry.[1]

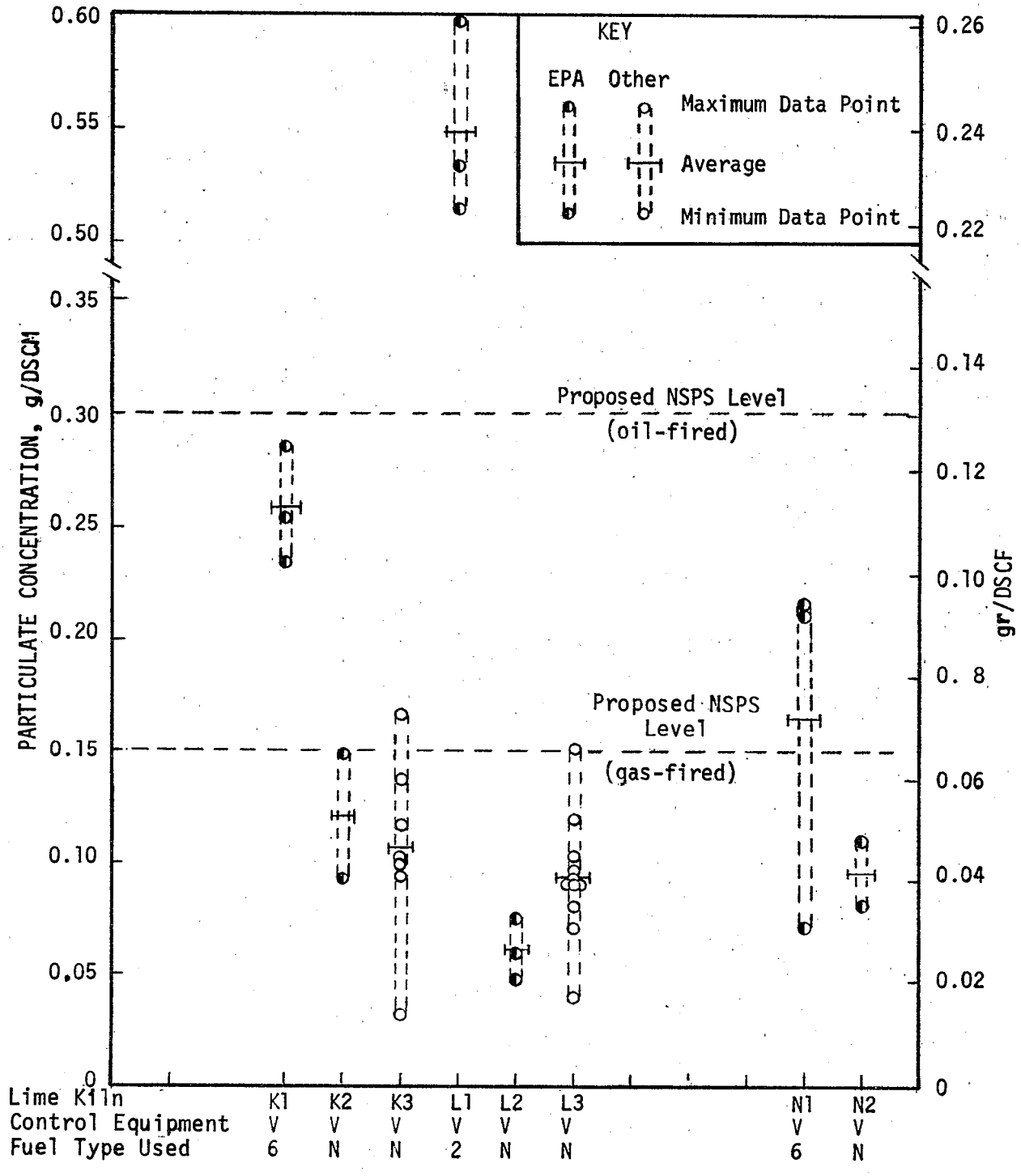

V-Venturi Scrubber
N-Natural Gas
2-No. 2 fuel oil
6-No. 6 fuel oil

Figure 9.10-5 Particulate concentrations in control system exhaust from lime kilns used in the kraft pulping industry.[1]

9.10.1.4 Secondary Environmental Impacts. Utilization of particulate control equipment in the kraft pulping industry generally has minimal secondary environmental impacts on water or solid wastes because the control device by-products are usually recycled to the process. Slurries from wet bottom elecrostatic precipitators on recovery furnaces and liquids from scrubbers on smelt dissolving tanks are recycled. Scrubbing water and lime-mud wash-water effluents from the lime kiln are normally recycled to the causticizing system for chemical recovery.

Particulate matter collected as a dry mass results from the utilization of dry-bottom electrostatic precipitators on recovery furnaces or lime kilns. The dry particulate matter from the recovery furnace is primarily Na_2SO_4, which is reused by dissolving it in the black liquor and returning it to the furnace for reduction to Na_2S. The sodium salts, calcium carbonate, and calcium oxide collected from the lime kiln exhaust gases are similarly returned to the causticizing unit. A secondary impact concerning solid waste may result when caustic solution is used in the lime kiln scrubber for simultaneous removal of particulate matter and reduced sulfur gases. If the mill at which the control system is applied cannot accept the added sodium in the form of caustic solution due to total mill chemical balance, some sodium waste may have to be removed and disposed.

The energy requirements associated with the various control alternatives are presented in Table 9.10-6.[15] The total energy consumption values and the values reported for scrubbers applied to recovery furnaces were obtained from Reference 15. All the other values were obtained from Reference 1, and were in general agreement with Reference 15. As can be seen from Table 9.10-6, scrubbers employed on recovery furnaces consume the most energy--more than three times the amount consumed by ESPs on recovery furnaces.

9.10.2 Sulfite Pulping

There are approximately 26 sulfite pulp mills in the United States centered primarily in Washington, Oregon, Wisconsin, and Maine.[16] In 1978, the capacity of these mills was 2.9 Tg on an annual basis, with a typical mill size of 310 Mg/day.[16] Total emissions of particulate matter from these mills amounted to 1.3 Gg in 1977 on a nationwide basis.[2]

9.10.2.1 Process Description and Emissions. The production of acid sulfite pulp is similar to kraft pulping. The basic difference is that in

Table 9.10-6. ENERGY IMPACTS OF CONTROL TECHNIQUES FOR KRAFT PULP MILLS[1,15]

Affected facility	Control device required for economic recovery level[a]	Control device required for meeting NSPS	Incremental energy required to meet NSPS,[b] kWh/Mg	Total energy consumption of control device,[c] kWh/Mg
Recovery furnace	ESP, 90% efficiency	ESP, 99.5% efficiency	8.3	9.9
		Scrubber, 7.5 kPa	6	35.6
Smelt tank	Demister	Scrubber, 1 kPa	2.5	3.3 - 4.4
Lime kiln	Scrubber	Scrubber, 7.5 kPa	5.6	7.7

[a]The economic recovery level is the level of control that can be economically justified by the value of the materials recovered.
[b]Incremental energy required to meet NSPS as compared to that required for achieving the economics recovery level.
[c]The total energy consumption is the amount of energy consumed by control equipment.

place of the sulfide-containing caustic solution used to dissolve the lignin in the wood, a salt of sulfurous acid is employed. To buffer the solution, a bisulfite of magnesium, ammonium, calcium, or sodium is used. A simplified flow diagram of a magnesium-base process is shown in Figure 9.10-6.[17] Calcium-base systems are used only in older mills and are being replaced with new magnesium or ammonium-base mills due to problems with disposal of spent liquor and recovery systems. Only one sodium-base sulfite pulp mill exists today.[16,18]

Digestion is carried out under high pressure and elevated temperature in the presence of a sulfurous acid-bisulfite cooking liquor. When cooking is completed, the digester is either discharged at high pressure (blowing) into a blow pit or its contents are pumped out at a lower pressure into a dump tank (dumping). The spent sulfite solution (known as red liquor) is drained and is either treated and disposed, incinerated, or sent to a plant for recovery of heat and chemicals. The choice of whether or not chemical recovery is desirable is dictated by the base employed in the cooking liquor. In calcium-base systems, chemical recovery is not practical, due to the low solubility of calcium salts and the formation of scale and calcium sulfate ash in the recovery process; therefore, the spent liquor is either discarded or incinerated. In ammonium-base operations, heat and sulfur can be recovered from the spent liquor through combustion and subsequent SO_2 absorption, but the ammonium base is consumed in the process. In sodium or magnesium-base operations, heat, sulfur, and base recovery are feasible. If recovery is practiced, the spent weak red liquor is concentrated to 55 to 60 percent solids and then sprayed into a furnace and burned. This recovery furnace is the major source of particulate emissions in the sulfite pulp mill.

Table 9.10-7 presents emission factors for sulfite pulping.[17] The type of particulate matter emitted depends on the base of the cooking liquor. Magnesium oxide is the major constituent of particulate matter emitted by magnesium-base liquor combustion, while ammonium sulfate and ammonium sulfate particles are emitted from ammonia-base recovery furnaces. Sodium carbonate and sodium sulfate are the major components of the particulate matter emitted by sodium-base liquor combustion. Limited information on particle size is available, but one study reports the mass mean particle size for a sodium-base sulfite mill to be 0.96 micrometers.[19]

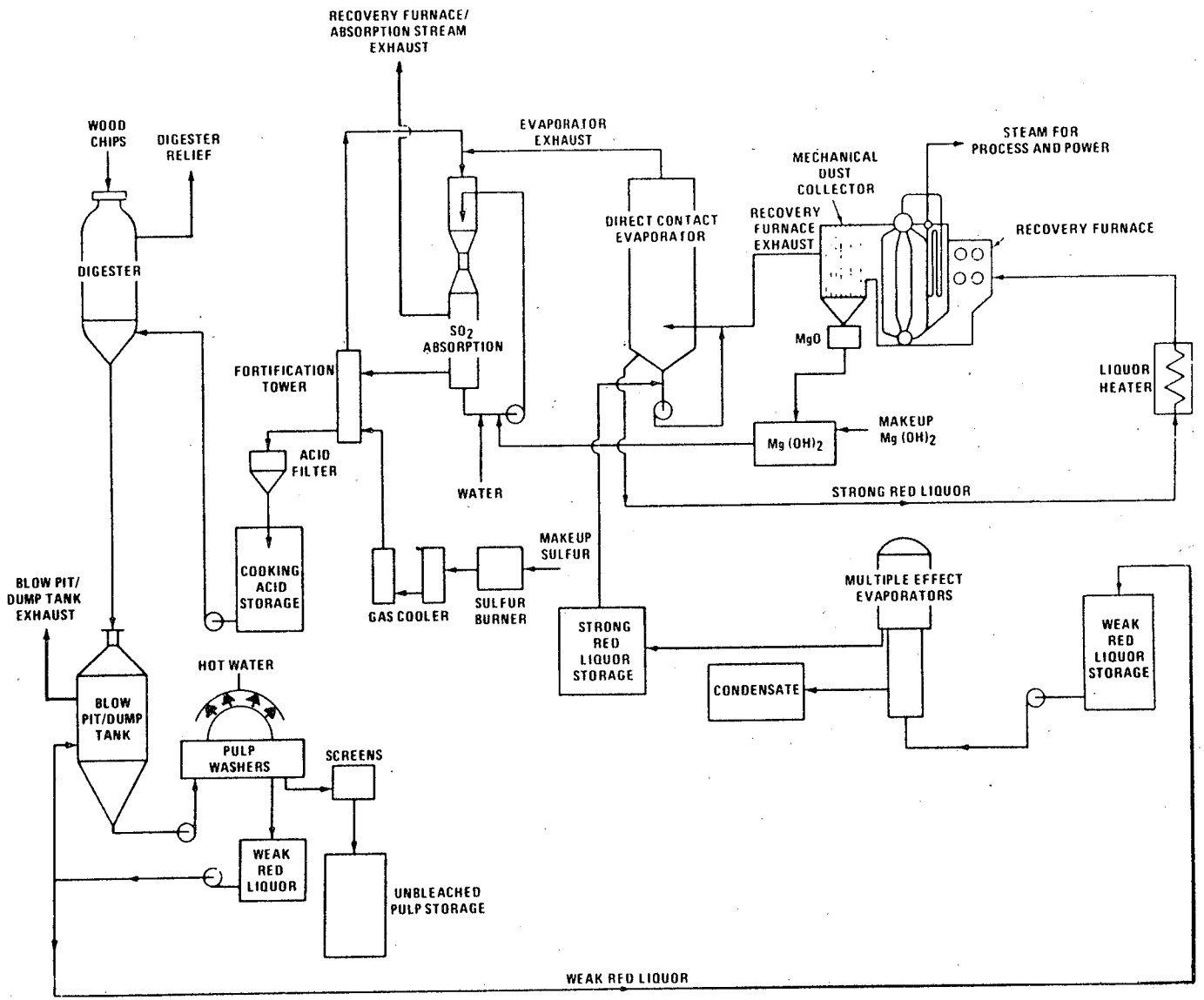

Figure 9.10-6 Simplified process flow diagram of magnesium-base sulfate pulp process employing chemical and heat recovery.[17]

Table 9.10-7. EMISSIONS FACTORS FOR SULFITE PULPING[a,17]

Source	Base	Control	Particulate emission factor[b] lb/ADUT[c]	kg/ADUMT
Recovery system[d]	MgO	Multiclone and venturi scrubbers	2	1
	NH_3	Ammonia absorption and mist eliminator	0.7	0.35
	Na	Sodium carbonate scrubber	4	2

[a]All emission factors represent long-term average emissions.
[b]Factors expressed in terms of lb (kg) of pollutant per air dried unbleached ton (MT) of pulp.
[c]ADUT = Air dried unbleached ton.
[d]The recovery system at most mills is a closed system that includes the recovery furnace, direct contact evaporator, multiple-effect evaporator, acid fortification tower, and SO_2 absorption scrubber. Generally, there will only be one emission point for the entire recovery system. These factors are long-term averages and include the high SO_2 emissions during the periodic purging of the recovery system.

Typical stack parameters for sulfite pulp mills are presented in Table 9.10-8.[20] These parameters represent averages for 26 mills across the United States.

9.10.2.2 Particulate Control Techniques. Emission control equipment applied to sulfite pulp mill recovery furnaces is generally dependent upon the chemical base used in the cooking liquor. Magnesium-base recovery furnaces are frequently controlled with multicyclones and venturi scrubbers.[16,18] Often multicyclones are followed in series by one or more venturi scrubbers, and these systems operate to eliminate sulfur emissions in addition to particulate matter emissions. In one plant, the multicyclone consists of 7640 tubes; each tube is 7.6 cm in diameter. Efficiencies of these multicyclones range from 96 to 98 percent in removing magnesium oxide.[16,21]

Ammonia-base sulfite recovery furnace emissions are controlled by low pressure drop tray scrubbers followed by glass-fiber packed filter units or mist eliminators. The multiple tray scrubber is designed primarily for sulfur dioxide absorption; however, some particulate matter removal is also achieved. A typical flue gas scrubber applied to an ammonium-base sulfite recovery boiler operates with a pressure drop of 2.75 to 3.85 kPa, and removal efficiencies range from 85 to 95 percent.[22,23]

A venturi scrubber followed by a cross-flow packed bed scrubber is in use in the only sodium-base recovery system in the U.S. The system serves several functions by reducing particulate and reduced sulfur gaseous emissions as well as recovering heat from the recovery furnace exhaust gases. The venturi scrubber operates at a pressure drop of 1.75 to 2.5 kPa; the total system pressure drop varies between 2.5 to 3 kPa. Removal efficiencies range from 96.5 to 97 percent.[8]

9.10.3 Plywood Manufacture

In 1978, approximately 500 veneer and plywood mills produced 2000 million m^2 of 0.95 cm thick plywood. The majority of these plants are located in Washington, Oregon, and North Carolina.[24,25] Total emissions of particulate matter from these plants amounted to 22.4 Gg on a nationwide basis in 1977.[2]

9.10.3.1 Process Description and Emissions. Figure 9.10-7 shows a typical plywood plant flow diagram.[26] During the manufacture of plywood, incoming logs are sawed to desired length, debacked, and then peeled into thin,

Table 9.10-8. STACK PARAMETERS FOR A TYPICAL SULFITE PULP MILL[20]

Stack height, m	51
Stack diameter, m	2.5
Flue gas temperature, K	385
Flue gas flow rate, Am^3/min	2340

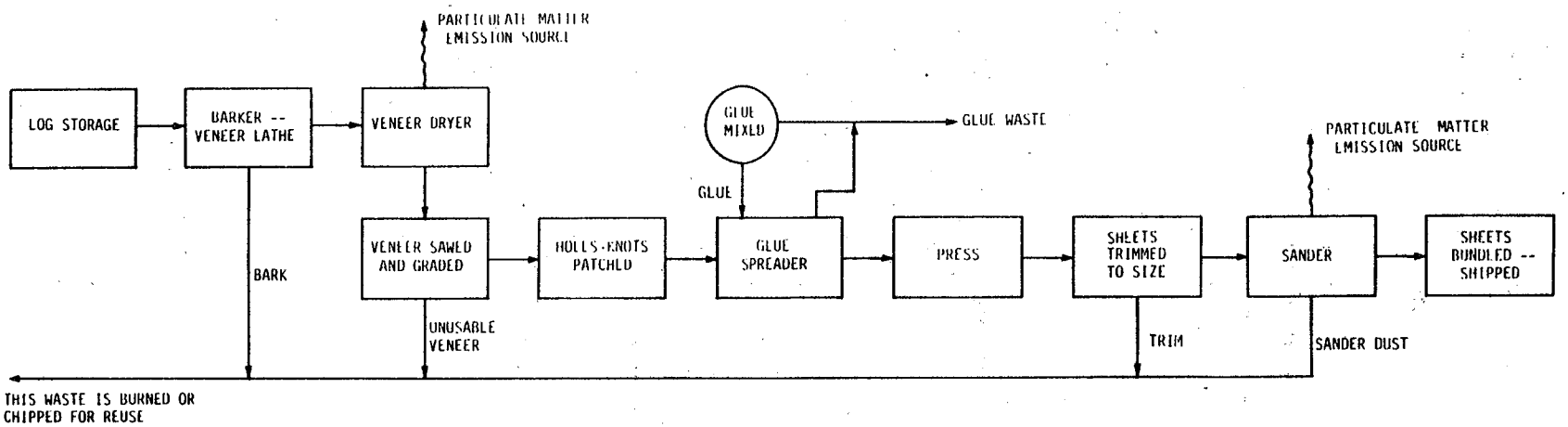

Figure 9.10-7 Plywood plant process diagram.[26]

continuous veneers of uniform thickness (6 to 50 mm is common). These veneers are then transported to special dryers, where they are subjected to high temperatures until dried to a desired moisture content. After drying, the veneers are sorted, patched, and assembled in layers, with some type of thermosetting resin used as the adhesive. The veneer assembly is then transferred to a hot press where the plywood product is formed. Finally, the plywood must be trimmed and sanded before it is bundled and shipped as final product. The two major sources of particulate emissions in the plywood mill are the veneer drying and sanding operations.

There are two major types of veneer dryers: longitudinal and jet. The longitudinal, or conventional, design consists of a forced convection drying system utilizing hot air that is in parallel to the flow of the veneer. The veneer is moved through the zones of the dryer on a roller conveyor, and the air is passed over and under the veneer at temperatures around 530 K. The gas is recirculated, with only a fraction of the gas stream being exhausted after each pass. The jet design dryer differs from longitudinal dryers in that the heated air stream is delivered to the veneer at a right angle. The air stream is, in essence, impinged on the veneer. The air circulation in a jet zone is across the flow of veneer through the dryer; air is recirculated in a similar manner and at roughly the same temperature as in longitudinal dryers. As with the longitudinal design, the veneer is moved through the dryer on a roller conveyor.

Veneer dryers may be either direct heated or steam heated. Direct heated dryers may be gas-fired or waste wood-fired. In the gas-fired veneer dryer, the burner utilized in most cases is a line type burner with burner rails spread uniformly across the duct. This design allows the air stream to be heated evenly.[27] A steam heated dryer has the same air circulation system as a gas heated dryer but instead of having a gas burner in the upper ducts, the steam dryer has banks of finned heating coils. Since not enough heat can be imparted to the air stream through these coils, additional steam coils are employed along the conveyor of the dryer.[27]

The major pollutants emitted from veneer dryers are organic compounds consisting of two discernable fractions: (1) condensibles, consisting of wood resins, resin acids, and wood sugars, which form a blue haze upon cooling

in the atmosphere, and (2) volatiles, which are comprised of terpines and unburned methane, the latter occurring when gas-fired dryers are employed. In addition, negligible amounts of fine wood fibers are emitted during the drying process.[25] The condensible organics tend to be submicrometer in size, while the wood fiber and other particulate matter is generally in the 1 to 10 micrometer size range.[28,29]

Sanding operations generate larger particles than veneer dryers, with a mean particle size on a count basis of 22 micrometers and 99.8 percent by weight of the particles in the 10 to 80 micrometer range.[30] Pneumatic transfer systems are used to capture the dust at the sanders and transport it to storage. Roughly 50 m^3/min of air is needed to transport 0.5 kg of sander dust in a low pressure system.[30]

9.10.3.2 Particulate Control Techniques. The main control technologies employed on veneer dryers are scrubber systems and incinerators. The scrubber systems generally employ pressure drops between 2.5 and 10.0 kPa, and they operate at 70 to 90 percent removal efficiency by weight.[31,32,33] One new scrubber system currently being used is the Becker Sand Filter. Its sand bed is 2.5 m^2, and it operates with a pressure drop of 6.3 to 10.0 kPa and a liquid-to-gas ratio of roughly 9.2 L/m^3 for an efficiency of 85 percent.[32,33] Incinerator systems involve utilizing a waste wood-fired boiler to control emissions from steam heated veneer dryers. The exhaust from the dryers is passed into the incinerator to combust the organic compounds present. Incinerators generally reduce the outlet opacity from 60 to 10 percent.[31] In direct heated dryers, up to one-half of the dryer exhaust can be vented to the waste wood-fired burner.

The most widely used method for control of sander dust emissions is a bag filter. A primary cyclone followed by a bag filter results in the best performance, with outlet loading well below 0.11 g/Nm^3.[30] Filtering velocities should not exceed 3 m/min and reverse air bag cleaning is generally employed in wood dust applications. The danger of fires and explosions is the only major drawback with these units. Small diameter multicyclones have recently been used to reduce outlet dust loading below 0.11 g/Nm^3, and they are not subject to the fire and explosion problems of fabric filters. The pressure drops range between 1 and 2.5 kPa for these units.[30]

REFERENCES FOR SECTION 9.10

1. Standards Support and Environmental Impact Statement. Volume 1: Proposed Standards of Performance for Kraft Pulp Mills. U.S. Environmental Protection Agency. Research Triangle Park, NC. Publication No. EPA-450/2-76-014a. September 1976.

2. OAQPS Data File of Nationwide Emissions. U.S. Environmental Protection Agency, Office of Air Quality Planning and Standards. Research Triangle Park, NC. February 1979.

3. Compilation of Air Pollution Factors, Second Edition. U.S. Environmental Protection Agency. Publication No. AP-42. April 1973.

4. Bump, R. L. Precipitator Design for Low-Odor Boilers Offers Special Problems. Pulp and Paper. October 1976.

5. Paul, J. E. Application of Electrostatic Precipitators for the Control of Fumes from Low-Odor Pulp Mill Recovery Furnaces. Journal of Air Pollution Control Association. 25:2. February 1975.

6. Bosch, J. C., et al. Size Distribution of Aerosols From a Kraft Mill Recovery Furnace. TAPPI. 54:11. November 1971.

7. Caron, A. L. An Analysis of the Design Parameters and Inquiry into the Performance of High Efficiency Electrostatic Precipitators Installed on Kraft Recovery Furnaces. NCASI Special Report. National Council of the Paper Industry for Air and Stream Improvement, Inc. New York, NY.

8. Engelbrecht, H. L., and N. D. Graves. Electrostatic Precipitator Installation for a Low-Odor Recovery Boiler. (Presented at the 68th Annual Meeting of the Air Pollution Control Association. June 1975.)

9. Szabo, M. F., and R. W. Gerstle. Operation and Maintenance of Particulate Control Devices in Kraft Pulp Mill and Crushed Stone Industries. U.S. Environmental Protection Agency. Research Triangle Park, NC. Publication No. EPA-600/2-78-210. October 1978.

10. Henning, K., W. Anderson, and J. Ryan. Improved Air Pollution Control for a Kraft Recovery Boiler: Modified Recovery Boiler No. 3. U.S. Environmental Protection Agency. Research Triangle Park, NC. Publication No. EPA-650/2-74-071a. August 1974.

11. The Electrostatic Precipitator Manual. The McIlvaine Co. Northbrook, IL. April 1977.

12. Sittig, M. Pulp and Paper Manufacturing, Energy Conservation and Pollution Prevention. Noyes Data Corp. Park Ridge, NJ. 1977.

13. Environmental Pollution Control, Pulp and Paper Industry, Part I: Air. U.S. Environmental Protection Agency, Technology Transfer. Cincinnati, OH. Publication No. EPA-625/7-76-001. October 1976.

14. Atmospheric Emissions from the Pulp and Paper Manufacturing Industries. Cooperative NCASI-USEPA Study Project. U.S. Environmental Protection Agency. Research Triangle Park, NC. Publication No. EPA-450/1-73-002. September 1973.

15. Energy Requirements for Environmental Control in the Pulp and Paper Industry. Roy F. Weston, Inc. U.S. Department of Commerce, Office of Environmental Affairs. Washington, DC. March 1977.

16. Thompson, C. M., et al. Screening Study on Feasibility of Standards of Performance for Two Wood Pulping Processes. U.S. Environmental Protection Agency. Research Triangle Park, NC. Publication No. EPA-450/3-78-111. November 1978.

17. Compilation of Air Pollution Factors, 3rd edition. U.S. Environmental Protection Agency. Publication No. AP-42. August 1977.

18. Linero, A. Background Document: Acid Sulfite Pulping. U.S. Environmental Protection Agency. Research Triangle Park, NC. Publication No. EPA-450/3-77-005. January 1977.

19. Teller, A. J., et al. Emission Control for Sulphite Recovery Boilers. Pulp and Paper. Canada. 78:2. February 1977.

20. Atmospheric Modeling Data from National Emission Data System (NEDS). U.S. Environmental Protection Agency, Office of Air Quality Planning and Standards. May 1979.

21. Keef, R. C. Magnesium Bisulfite Startup. TAPPI. 54:4. April 1971.

22. Benjamin, R. M. Air Pollution Control Technology, Wood Pulping Industry. Unpublished Data. Environment Canada, Chemical Process Sources Division, Abatement and Compliance Branch, Air Pollution Control Directorate. Ottawa, Ontario, Canada.

23. Button, E. F., et al. A New Processing System for Sulfite Recovery Boiler Flue Gas. (Presented at TAPPI Environmental Conference. Chicago, IL. April 1977.)

24. American Plywood Association Management. Bulletin No. FA-200. American Plywood Association. Tacoma, WA. April 10, 1979.

25. Development Document for Effluent Limitations Guidelines and New Source Performance Standards for the Plywood, Hardboard, and Wood Preserving Segment of the Timber Products Processing Point Source Category. U.S. Environmental Protection Agency. Washington, DC. Publication No. EPA-440/1-74-023a. April 1974.

26. Bodien, D. G. Plywood Plant Glue Waste Disposal: Progress Report. U.S. Department of the Interior. Corvallis, OR. Publication No. PR-2. February 1968.

27. Vranizan, J. M. Veneer Dryers - Typical Construction, Operations and Effluent Abatement Possibilities. (Presented at APCA 1972 Annual Meeting. Eugene, OR. November 17, 1972.)

28. Brown, D. J. Veneer Dryer Emissions--Problem Definition. Forest Products Journal. 21:9. September 1971.

29. Investigation of Emissions from Plywood Veneer Dryers, Final Report. Prepared for Plywood Research Foundation. Tacoma, WA. U.S. Environmental Protection Agency. Durham, NC. Contract No. CPA-70-138. March 1971.

30. Tretter, V. J. Technology for the Control of Atmospheric and Waterborne Emissions from Plywood and Lumber Manufacture. (Presented to 69th AICHE Meeting. Chicago, IL. November 1976.)

31. Tretter, V. J. Plywood Veneer Dryer Emission Control Systems. (Presented at the 69th APCA Meeting. Portland, OR. June 1976.)

32. Burkart, A. Veneer Drier Emissions Control Systems. Oregon Department of Environmental Quality. Portland, OR. June 1975.

33. Mick, A. Current Particulate Emissions Control Technology for Particleboard and Veneer Dryers. (Presented to Pacific Northwest International Section of Air Pollution Control Association. November 1973.)

9.11 LEAD-ACID BATTERY MANUFACTURING

Over 200 plants have been identified as primary producers of lead-acid storage batteries. The largest concentration of these plants is in California, Florida, Illinois, Pennsylvania, and Texas. The lead-acid battery industry is the largest single user of lead in the nation, accounting for more than half of the total lead consumption. In 1975, this total lead consumption amounted to 1.19 Tg, of which 0.635 Tg were used in the manufacture of storage batteries. The lead-acid battery represents the most frequently used storage cell, and two major types are produced: starting-lighting-ignition (SLI) batteries and industrial storage batteries for low voltage power systems. SLI batteries account for more than 80 percent of the battery market, and almost 80 percent of the SLI batteries are used in automobiles. In the past, production plants for lead-acid batteries have been small and located close to their markets, but the present trend is toward larger plants with increased efficiency and capacity. The industry is expected to expand at an annual rate of 3 to 5 percent over the next 5 to 10 years.[1]

Particulate emissions from the battery industry include lead, lead oxide, and sulfuric acid mist. The fraction of particulate matter estimated to be lead is 50 to 60 percent; however, published quantitative data to substantiate this estimate are minimal.[2,3] National lead emissions from the storage battery industry were estimated to be 81.5 Mg in 1975, as detailed in Table 9.11-1.[1] Because of the importance of the storage battery industry as an emission source of high lead levels in the atmosphere in the vicinity of battery plants, this discussion concentrates on lead emissions and applicable control techniques. In general, emission control methods used to reduce lead emissions will also reduce the emission of non-lead particulate matter.

9.11.1 Storage Battery Manufacturing Processes and Particulate Emissions

A lead-acid battery consists of lead electrodes, or plates, in an electrolytic solution of sulfuric acid and water. The plates are made of an inactive lead grid, onto which a lead oxide sulfate paste is applied and bonded. The lead grid provides both structural support and a conductive path for electric current. A process diagram of battery manufacturing, showing emission points and uncontrolled emission factors, is given in Figure 9.11-1. Processes and their emissions are described below.

Table 9.11-1. 1975 NATIONWIDE EMISSIONS OF LEAD FROM THE MANUFACTURE OF LEAD-ACID STORAGE BATTERIES[1]

Process	Throughput,[a] Gg Pb	Estimated avg. control efficiency,[b] %	Uncontrolled emission factor, g/kg of lead throughput	Estimated actual emissions, Mg
Lead oxide production	338	--[c]	0.01	3.4
Grid casting	397	50	0.07[d]	10.3
Lead reclamation	6.2[e]	80	2.97	3.6
Paste mixing	338	90	0.86[d]	29.0
Three-process operation	635	90	0.56[d]	35.9
Total emissions for 1975				81.5

[a]Based on 1975 data from "Lead Industry Monthly Mineral Industry Surveys," Bureau of Mines, May 1976.
[b]Based on information obtained from battery manufacturers and control agencies.
[c]Emission factor is based on controlled emissions; fabric filters are a part of the process.
[d]Based on test data in units of pounds of lead emissions per 1000 batteries and assumption of an average of 11.8 kg of lead per battery. Half is assumed to be in the castings and half in the paste.
[e]Estimated at 1 percent of total lead throughput.

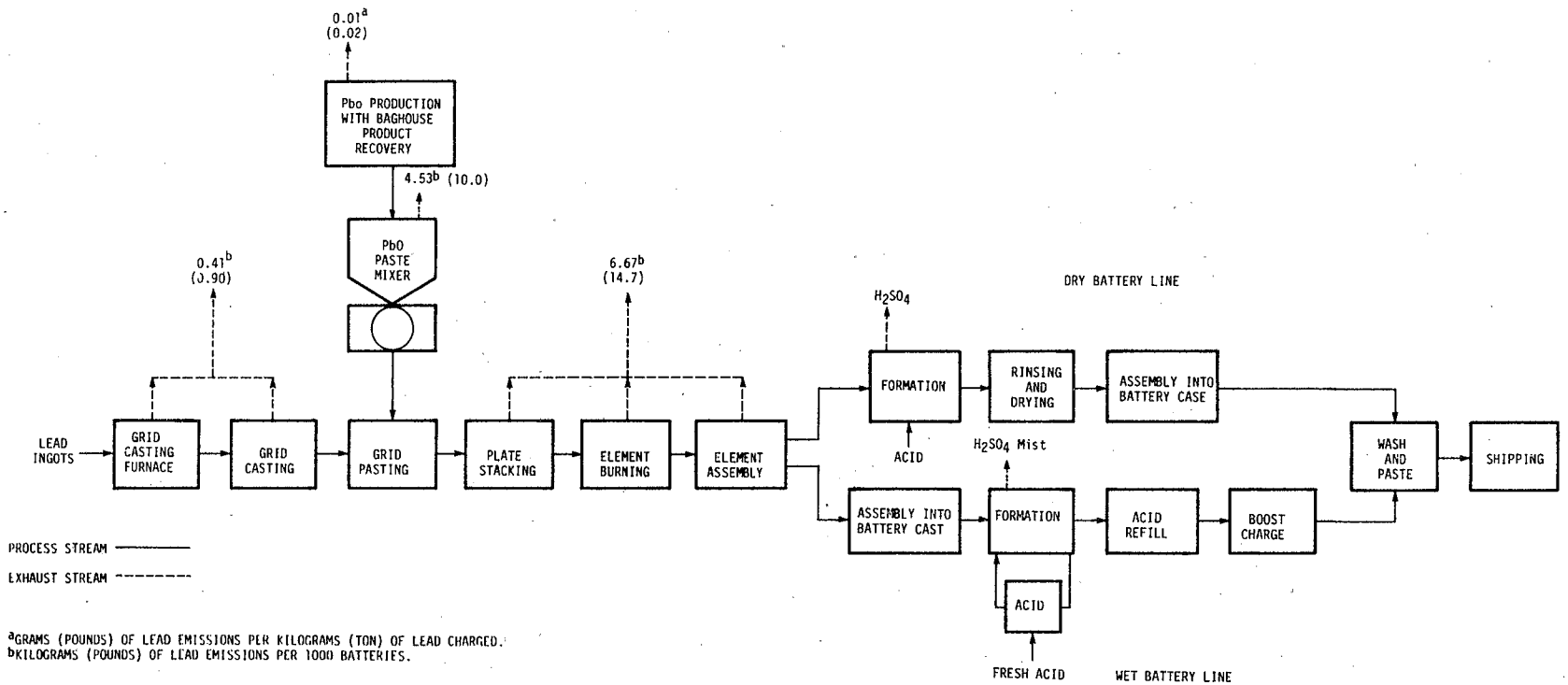

Figure 9.11-1 Process flow diagram showing uncontrolled lead emission factors for lead-acid battery manufacture.[1]

9.11.1.1 Grid Casting. Techniques for casting the grid vary with the alloy used, type of mold, and mold preparation procedure. Generally, however, one of two methods is used. The lead ingots can either be melted in several melting pots which are attached directly to the casting machines, or the lead can be melted in a central pot furnace from which it is transferred to the casting machines. The grids are formed in the molds and then are ejected, trimmed, and stacked.

Lead emissions from grid casting operations are generally minimal. Melting pot furnace emissions are typically vented to the atmosphere, but the areas around the casting machines are usually unvented. Estimated uncontrolled emissions from grid casting in 1975 amounted to 0.07 g/kg of lead processed. Approximately one quarter of the particulates emitted were less than 15 micrometers in diameter.[1]

9.11.1.2 Paste Mixing. The paste mixing operation is a batch process which uses a muller, Day, or dough-type mixer. Lead oxide is blended in the mixer with a sulfuric acid solution and a trace amount of Dynel fiber to form a stiff paste. Carbon black and approximately 1 percent by weight of expander are added to paste batches intended for negative plates. The mixing cycle is generally 15 to 60 minutes in duration.

Lead oxide particles are emitted by the paste mixers, and smaller amounts of the other paste constituents such as Dynel and carbon black are also emitted. These emissions are produced when the dry ingredients are charged to the mixer, and are emitted during the first few minutes of the mix cycle. Uncontrolled lead oxide emissions are estimated to be 0.86 g/kg of lead throughput.[1] The size range of particulate matter emitted from paste mixing operations prior to control has not been reported.

9.11.1.3 Three-Process Operation--Stacking/Burning/Assembly. After curing, the plates are usually sent to the three-process operation, which includes plate splitting and stacking, burning, and assembly of the elements into the battery case. All three of these processes emit pollutants to a common workroom area and, therefore, the process emissions are considered cumulatively. After being split, plates are stacked in an alternating positive and negative block formation with insulating separators between the plates. Separators are made of wood, treated paper, rubber, or plastic.

In the burning operation, leads are welded to the tabs of each positive and negative plate, fastening the element together. Alternatively, molten lead can be poured around and between the plate tabs to form the connection. The elements are completed by welding a positive and a negative terminal to each element. The completed elements are then assembled into battery cases either before or after formation.

The major pollutant emitted from these operations is lead from airborne paste particles. Plate stacking and the burning process emit most of the lead emissions from this operation; however, significant emissions are also generated during the handling of plates between processes. Stacks are straightened by being struck against a grated surface, causing paste particles to be released into the air. Work areas are usually vented to the atmosphere to protect the workers' health. Emissions of lead from these processes are estimated to be 0.56 g/kg of lead processed, the majority of which are in the inhalable size range.

9.11.1.4 Formation. The formation process converts the inactive lead-oxide-sulfate paste into an active electrode. Cathodes are formed by oxidizing the lead oxide in the paste to lead peroxide; anodes are formed by reducing the paste to metallic lead. To accomplish this, inactive plates are placed in a dilute (10 to 25 percent) sulfuric acid solution with the positive plates connected to the positive pole of a direct current source, and the negative plates connected to the negative pole.

Two basic methods of formation are used: wet and dry. In the wet battery formation process, the elements are assembled into the battery case. The plates are then formed within the case; this operation generally takes 1 to 4 days. After formation, the spent acid is replaced with fresh acid. During dry formation, battery plates are formed in large open vats of sulfuric acid prior to battery assembly.

Sulfuric acid mist is emitted during the formation process. The hydrogen generated by the oxidation-reduction process forms bubbles which carry sulfuric acid with them as they break the surface of the acid solution, resulting in an acid mist above the containers. No data are currently available on emissions from the wet formation process. However, based on the slow rate of wet formation, and the fact that there is usually a lid on the assembled battery, emissions from wet formation are thought to be minimal.[1]

Data from one dry formation process showed sulfuric acid emissions towards the end of a 16-hour formation cycle to be 66 mg/m^3. This formation room produced 20,000 battery plates over a 16-hour period. Emissions are highest near the end of the formation cycle, when hydrogen production is greatest.[1]

9.11.1.5 Lead Oxide Production. The lead oxide used in battery paste production is approximately 70 percent PbO and 30 percent metallic lead. Generally, it is produced on-site only at plants of production capacity greater than 500 batteries per day. Two processes, the ball mill process and the Barton process, are used to produce lead oxide. In both processes, a fine dust of lead oxide is formed and conveyed by a circulating air stream to a hammermill for further grinding, and then to a baghouse for product recovery. Lead oxide emissions in the ball mill exhaust stream are also recovered in a fabric filter. Emissions from the ball mill process are estimated to be 0.475 g/kg of lead input.[1]

9.11.1.6 Lead Reclamation. Clean lead scrap, primarily small parts or defective grids and plates, can be remelted in a pot-type furnace and cast into ingots. This is typically done sporadically, only when enough scrap is available to charge the furnace. Small plants, with production capacity less than 500 batteries per day, do not have lead reclamation facilities. It is estimated, based on plant studies, that approximately 1 percent of all lead entering the lead-acid battery industry nationwide is recycled through lead reclamation. Uncontrolled lead emissions from this process are high, estimated to be 298 g/kg of scrap input. Over half of the particles emitted during lead reclamation are under 15 micrometers in diameter.[1]

9.11.2 Control Techniques

Particulate emissions from the lead-acid battery industry are currently controlled by a variety of devices ranging in efficiency from 50 to 99.8 percent. Baghouses, with efficiencies of 96 to 99.8 percent, comprise 60 percent of the control devices currently in use in this industry. Other devices frequently used are venturi scrubbers, packed-bed scrubbers, and impingement and entrainment scrubbers. These devices have reported efficiencies ranging from 50 to 98 percent. Devices currently controlling emissions from each process are briefly described in this section, and are summarized in Table 9.11-2.

Table 9.11-2. PARTICULATE CONTROL DEVICES USED IN THE LEAD-ACID BATTERY MANUFACTURING INDUSTRY[1]

Process	Generic control device/ control technique	Specific type of device	Overall pollutant removal efficiency, %	Air-to-cloth ratio	Water-to-gas ratio, l/m^3	Pressure drop, Pa	Make-up water requirement, l/m^3
Grid casting	Impingement and entrainment scrubber	Type N roto-clone	90+ (lead)	N/A	2.6	1245	Less than 0.134
	Centrifugal and impingement scrubber	Cascade scrubber	--	N/A	--	--	0.41
	Baghouse	Pulse jet type	99	6:1	--	--	N/A
Paste mixing materials charging	Baghouse	Shaker type	98 (lead)	4:1 - 8:1	N/A	249 - 1494	N/A
Mixing	Impingement and entrainment scrubber	Type N roto-clone	90 (lead)	N/A	2.6	1245	Less than 0.134
	Cascade scrubber	--	86 (lead)	N/A	--	500	--
Three-process operation	Baghouse	Pulse jet type	97 - 99.3 (lead)	6:1 - 7:1	N/A	--	N/A
		Shaker type	98.6 (lead)	3:1	N/A	--	N/A
	Impingement and entrainment scrubber	Type N roto-clone	90 (lead)	N/A	2.6	1245	Less than 0.134
Lead-oxide manufacturing	Baghouse	Pulse jet type	--	2:1	N/A	249 - 498	N/A
		Shaker type	--	4:1	N/A	1494	N/A
Lead reclamation	Centrifugal and impingement scrubber	Cascade scrubber	98.3 (lead)	N/A	0.53 - 0.7	498 - 747	--
	Impingement and entrainment scrubber	Type N roto-clone	N/A	N/A	0.4 - 0.7	2000	--
Formation	Good housekeeping	--	--	--	--	--	--
	Foam	--	--	--	--	--	--
	Mist eliminator	Packed tower	--	--	--	--	--
	Scrubber/mist eliminator	Heil fume washer	97.5 (sulfuric acid)	--	--	--	--

[a]Not currently in use in this application.

Emissions from several processes or process stages are frequently vented to a common control device via a collection system of hoods and ducts. Plant layout and the economics of product recovery are usually the factors used to determine which processes will be ducted to a specific control device to form a control system. Table 9.11-3 presents several alternative control systems that have been proposed.[1] These systems rely primarily on control devices currently in use in the industry, with the exception of a heavier reliance on baghouses. The use of fabric filters has been avoided in processes where exhaust gases have a high moisture content or possible spark hazards. However, with proper precautions, fabric filters can successfully be applied to these processes, and operate with lower costs and energy requirements than scrubbers. None of the emissions from lead-acid battery manufacturing processes are treated by a series of control devices. In instances where a cyclone or baghouse precedes another device, the first device is designed for product recovery rather than emissions control. Control system costs and effectiveness for each of the alternative systems are presented in Table 9.11-4 and described below.

9.11.2.1 Grid Casting. Emissions from grid casting operations are typically very low, and are often uncontrolled. Some plants have used impingement and entrainment scrubbers, such as the Type N Roto-Clone, or cascade scrubbers to control emissions from both the furnaces and the casting machines. Cascade, or multiwash centrifugal, scrubbers used to control grid casting emissions can treat up to 1415 m^3/min (50,000 acfm) with water injection requirements as low as 0.41 l/m^3 (3 gal/1000 acf). Frequently, grid casting machines and furnaces are vented along with other operations, such as small parts casting and lead reclamation, to a single low-energy scrubber. Fabric filters are presently not used for grid casting particulate control. Although fabric filters would provide a higher degree of control (99 percent at a filtering velocity of 1.8 m/min), their use may also require a slight change in casting operations.

9.11.2.2 Paste Mixer. Both baghouses and scrubbers can be used to control emissions from this source. Most plants use only a scrubber. However, some plants use a baghouse to collect the dry particulate emissions from the charging phase and a scrubber to collect particulate matter emitted during the wet mixing phase. Impingement entrainment scrubbers, such as the Type N

Table 9.11-3. SELECTED CONTROL ALTERNATIVES FOR LEAD-ACID BATTERY MANUFACTURING INDUSTRY[1]

Control alternative	Facilities[a]	Control system[b]
I	A, B, F	Fabric filter, 6/1 A/C
	C, E	Fabric filter, 6/1 A/C
	G	Mist eliminator
	D	Fabric filter, 2/1 A/C
II	B, C, E	Fabric filter, 6/1 A/C
	F	Impingement and entrainment scrubber
	A	Impingement and entrainment scrubber
	G	Mist eliminator
	D	Fabric filter, 2/1 A/C[c]
III	C, E	Fabric filter, 6/1 A/C
	A, B, F	Impingement and entrainment scrubber
	G	Mist eliminator
	D	Fabric filter, 2/1 A/C
IV	A, B, C	Impingement and entrainment scrubber
	E	Fabric filter 6/1 A/C
	F	Impingement and entrainment scrubber
	G	Mist eliminator
	D	Fabric filter, 2/1 A/C[c]
V	A, B, C, F	Impingement and entrainment scrubber
	E	Fabric filter, 6/1 A/C
	G	Mist eliminator
	D	Fabric filter, 2/1 A/C[c]
VI	A, B, C	Fabric filter, 6/1 A/C
	E	Fabric filter, 6/1 A/C
	G	Mist eliminator
VII	A, B, C, E,	Fabric filter, 6/1 A/C
	G	Mist eliminator
VIII	A, B, C	Impingement and entrainment scrubber
	E	Fabric filter, 6/1 A/C
	G	Mist eliminator

[a]Facilities key: A - Grid casting furnace; B - Grid casting machines; C - Paste mixer; D - Lead oxide manufacturing; E - Three-process operation and assembly; F - Lead reclaim furnace; G - Formation.
[b]All facilities are vented to common control systems as shown. Air-to-cloth ratios (A/C) are given for fabric filters.
[c]Small (less than or equal to 500 bpd) plants are assumed to have no PbO manufacturing facilities.

TABLE 9.11-4. SUMMARY OF ALTERNATIVE CONTROL SYSTEMS COSTS AND CONTROL EFFECTIVENESS FOR LEAD-ACID BATTERY PLANTS[1]

Control alternative[a]	Plant capacity, bpd	Lead emissions, kg/day		Lead removal, %	New plant control systems cost, $1,000[b]		Existing plant control systems cost, $1,000	
		Uncontrolled	Controlled		Installed	Annualized[d]	Installed[c]	Annualized[d]
I	500	6.2	0.06	99.0	170	67.5	205	76.7
	2000	25.0	0.30	98.8	366	158	447	193
	6500	81.6	0.99	98.8	838	379	1020	428
II	500	6.2	0.09	98.6	196	76.9	136	87.2
	2000	25.0	0.40	98.4	383	172	468	208
	6500	81.6	1.31	98.4	859	398	1040	449
III	500	6.2	0.10	98.4	165	67.6	199	76.5
	2000	25.0	0.42	98.3	355	157	434	192
	6500	81.6	1.43	98.3	808	372	982	420
IV	500	6.2	0.33	94.8	155	50.2	187	58.5
	2000	25.0	1.30	94.8	309	98.1	379	131
	6500	81.6	4.38	94.6	680	186	828	228
V	500	6.2	0.33	94.8	114	39.4	138	45.8
	2000	25.0	1.30	94.8	274	86.9	337	118
	6500	81.6	4.41	94.6	637	173	776	122
VI	100	1.22	0.0122	99.0	101	36.6	121	41.8
	250	3.04	0.0304	99.0	120	43.7	144	49.6
VII	100	1.22	0.0122	99.0	136	52.3	163	59.2
	250	3.04	0.0304	99.0	161	60.3	193	68.2
VIII	100	1.22	0.0615	94.9	106	34.1	127	39.6
	250	3.04	0.154	94.9	125	40.9	150	47.1

[a]A description of each control alternative is presented in Table 9.11-3. There is no control alternative for acid mist; the cost to control this pollutant was added to the cost of each lead control alternative.
[b]Mid-1975 dollars.
[c]Excludes SIP compliance costs estimated at $35,000, $35,000, $91,000, $95,000, and $105,000 for plants with capacities of 100, 250, 500, 2000, and 6500 bpd, respectively.
[d]Excludes costs of controlling facilities that require controls to meet SIP regulations.

Roto-Clone (used to control grid casting emissions) and cascade scrubbers, are used to control paste mixer emissions.

Fabric filters used to control emissions from the charging phase of this process usually employ bags made of Orlon felt, Polyester, cotton sateen, or wool. At present, fabric filters are not frequently applied to emissions from the entire mixing process because of difficulties with blinding of the bags by moist particulates emitted during the wet mixing phase. Emissions from the slitting process, part of the three-process operation wherein the double plates are split, can also be treated by the paste mixer baghouse. Removal efficiencies from combined slitting and mixer emissions are on the order of 98 percent.

9.11.2.3 Three-Process Operation. Emissions from stacking, burning, and assembly operations are usually vented to a common duct prior to cleaning by either a fabric filter or a scrubber. Effective hooding of the emission sources is very important in reducing emissions from the three-process operations due to the fugitive nature of the emissions. In some instances, emissions from the paste mixers are also ducted to the same control system.

Impingement scrubbers with the same pressure drop, makeup water, and liquid-to-gas ratio requirements used to reduce grid casting emissions are also used to control the three-process emissions. Collection efficiency is approximately 90 percent. Shaker-type fabric filters are capable of reducing lead emissions from the three-process operation to less than 1.15 mg/m^3, with efficiencies ranging from 97 to 99.3 percent.

9.11.2.4 Lead-Oxide Production. Fabric filters are usually used to collect the valuable fine lead oxide particles emitted during lead-oxide production. The baghouses serve the dual purpose of reducing air pollution and increasing product recovery. Wet scrubbers are not used to control emissions from this process for economic reasons. Air-to-cloth ratios of from 2 to 1 to 4 to 1 are typical for baghouses in this application, thereby preventing the collected material from blowing through from one side of the bag to the other. Two baghouses are frequently installed in parallel to handle the emissions. Test results from baghouses installed on ball-mill lead-oxide production facilities indicate that emissions can be reduced to less than 1.1 mg/m^3.[1]

9.11.2.5 Lead Reclamation. Emissions from lead reclamation facilities are usually controlled by either impingement and entrainment scrubbers, or cascade scrubbers. Since the character of the exhaust gas stream is very similar to the exhaust from grid casting operations, emissions from these processes are often vented to a common scrubber.

9.11.2.6 Formation. Formation, as explained earlier, can take place either in the battery case or in a large open vat. Emissions from formation in the battery case are apparently very low, since most plants using this process do not have ductwork to remove the emissions from the area. Emissions from the open vat forming process are higher, and are typically controlled by foam, mist eliminators, or scrubbers. Good housekeeping procedures are used to control sulfuric acid mist emissions from both forming techniques.

When the plates are being formed in the battery case, sulfuric acid mist emissions are minimized by forming the plates slowly and keeping the battery tightly covered. Either the battery filler caps or a reusable battery cover, to be replaced by the permanent battery top after formation is complete, are used for this purpose. One manufacturer uses a patented battery filler cap having a ceramic disc on the inside of the cap. The ceramic absorbs the hydrogen being emitted during formation. Since the sulfuric acid is carried into the atmosphere by the hydrogen bubbles, these caps virtually eliminate acid mist emissions.

Foam covers for the formation vats have been found to reduce acid odors around the tanks. However, emission measurements indicate that very little reduction, if any, is achievable through application of this control technique.

Mist eliminators, in which emissions from the vats are ducted to a packed tower which absorbs mist particles, are frequently used. The packing is washed periodically, at least once a day and in some instances as often as two or three times per shift.

Scrubbers are less frequently used to control formation process emissions. The scrubbers used are usually low energy scrubbers, such as the Heil fume washer, which is a combined scrubber and mist eliminator. Scrubber/mist eliminator devices have been found to reduce emissions of sulfuric acid mist by 97.5 percent.[1]

9.11.3 Secondary Environmental Impacts

All control devices used at lead-acid battery plants operate by means

of electrical energy, which is used primarily to drive fans installed to overcome the pressure drop across the control devices. Electrical energy is also used to drive scrubber pumps. Energy requirements for particulate pollution control are estimated at 37, 119, and 318 MWh/year for 500, 2000, and 6500 bpd plants, respectively.[1] These values assume a pressure drop of 1245 Pa across all control devices but do not include ductwork pressure drop.

The generation of aqueous wastes by particulate control scrubbers represents a small fraction of the total wastewater flow and lead content of wastewater produced by a lead-acid battery manufacturing facility. The incremental pollutant loadings due to particulate pollution control systems have been assessed in Reference 1. Incremental flows and lead loadings to be treated by the wastewater system range from a negligible increase to an incremental increase of several percent.

The impact of particulate control residues on solid waste production is also slight in comparison to the total solid wastes generated. The largest quantity of air pollution-generated solid waste is the sludge generated by lime treatment of the blowdown from the formation facility control system. For a 6500 bpd plant, the generation of this sludge represents a 0.15 percent increase in the solid waste produced by the plant. The solid wastes generated from the dry collection of lead air pollutants are sent to in-plant or outside reclamation furnaces or smelters for lead recovery. Solid waste practices and disposal methods for this industry are discussed in Reference 4.

REFERENCES FOR SECTION 9.11

1. Lead-Acid Battery Manufacture - Background Information for Proposed Standards. Draft Environmental Impact Statement. U.S. Environmental Protection Agency, Office of Air Quality Planning and Standards. Research Triangle Park, NC. Publication No. EPA-450/3-79-028a. November 1979.

2. Compilation of Air Pollution Emission Factors. U.S. Environmental Protection Agency, Office of Air Quality Planning and Standards. Research Triangle Park, NC. Publication No. AP-42. July 1979.

3. Personal Communication with Lee Beck, U.S. Environmental Protection Agency, and A. Walter Wyss, Acurex Corporation, Mountain View, CA. September 1979.

4. McCandless, L. C., et al. Assessment of Industrial Hazardous Waste Practices - Storage and Primary Batteries Industries. U.S. Environmental Protection Agency. Publication No. EPA-530/SW-102c. January 1975.

9.12 FUGITIVE DUST SOURCES

Fugitive dust emissions are dusts which become airborne due to forces of wind, man's activity, or both. Fugitive dust emissions can be categorized as: (1) anthropogenic sources (those that result directly from and during human activities) such as agricultural tilling, construction activities, street dust, inactive tailing piles, and unpaved roads; and (2) wind erosion sources such as agricultural fields, disturbed soil surfaces, and unpaved roads. This section discusses fugitive dust sources, emissions, and control techniques employed to prevent or reduce emissions from agricultural sources, transportation sources, stockpiles and waste disposal heaps, and construction sources. Specific control technologies common to a number of the aforementioned sources are discussed in detail in Section 5 of Volume 1.

9.12.1 Agricultural Sources

It is estimated that agricultural sources such as tilling and wind erosion of harvested cropland contribute particulate emissions on the order of 24.1 Tg per year nationwide. As a point of comparison, total point source emissions in the U.S. are on the order of 18.1 Tg per year.[1] The dust emissions in agriculture are primarily produced by wind erosion of open fields and agricultural tilling.

Although it has been reported that wind erosion of non-irrigated open fields accounts for 90 percent of all the fugitive dust emissions from agricultural sources, a study performed for Phoenix, Arizona, found that 75 percent of the dust emissions from agricultural sources are due to agricultural tilling and 25 percent are caused by wind erosion.[2,3] The latter study included the irrigation effects on the soil. Periodic irrigation during the growing season maintains soil moisture such that the soil remains in an aggregated state. The effects of the irrigation are significant in the off-growing season, when disconsolidation of the soil and exposure to winds would reduce resistance to soil erosion.

9.12.1.1 Source Description and Emissions.

9.12.1.1.1 Open fields. The fugitive emissions produced by wind erosion of agricultural soils depend on the soil type and moisture, wind velocity, vegetation cover, and field and surface geometry. Although many equations have been developed by researchers for estimating agricultural emissions,

there seems to be a basic agreement that from 2.5 to 10 percent of all the soil eroded due to wind erosion becomes airborne as suspendable particulate matter.[1] The threshold wind velocity, a critical factor for wind erosion, has been defined as "the wind speed at which the generation of dust begins due to its aerodynamic forces being of sufficient magnitude to overcome those forces holding individual particles in the soil."[4] The wind forces cause soil movement by three distinct mechanisms: surface creep, saltation (jumping), and suspension.[4] Minimal information is, however, available relating these mechanisms and their individual contribution to the dust generated due to wind erosion.

9.12.1.1.2 Agricultural tilling. Fugitive dust emissions that result from agricultural tilling are estimated to be 3.0 Tg per year nationwide.[1] During a tilling operation, dust particles from the loosening and pulverization of the soil are injected into the atmosphere as the soil is dropped to the surface. Dust emissions are greatest when the soil is dry and during final seedbed preparation. The factors affecting agricultural tilling fugitive dust emissions are silt content of the soil, implement speed, distribution of agricultural acreage, moisture in the soil, and temporal distribution of tilling activities. Although a variety of implements are employed, including disk plows, moldboard plows, and listers, it has been found that the emissions do not differ greatly from one implement to another.[3]

A typical particle size distribution of dust emissions from agricultural tilling has been reported and is presented in Table 9.12-1. Although the size distribution data were gathered through field measurements in Morton and Wallace Counties in Kansas, particle sizes may vary according to local soil characteristics.

9.12.1.2 Control Techniques. Control techniques employed for agricultural sources generally prevent the emissions from becoming airborne rather than capturing them. Continous cropping, crop residue-limited irrigation of fallow fields, strip cropping, windbreaks, and chemical soil stabilizers are the common control techniques used in preventing fugitive emissions from open fields. Vehicle speed reduction and deflector attachments are the techniques employed in reducing emissions from agricultural tilling. Table 9.12-2 summarizes these techniques and their relative effectiveness.[5]

Table 9.12-1. PARTICLE SIZE DISTRIBUTION OF THE DUST EMISSIONS FROM AGRICULTURAL TILLING[3]

Particle diameter, μm	Weight, %
Less than 2	35
2 to 30	45
Greater than 30	20

Table 9.12-2. FUGITIVE DUST CONTROL METHODS FOR AGRICULTURAL SOURCES[5]

Source	Type of control	Relative estimated effectiveness[a]	Remarks or restrictions
Open fields	Wind breaks	VP	
	Chemical stabilizers	P	Possible interactions with plants. May be restrictive due to cost and temperature.
	Crop plantings	F	May be restrictive due to cost and lack of markets for off-season crops.
Agricultural tilling	Wet suppression	F	Continual turnover leads to low efficiency of control. Additional problems include the possible short supply of water and the inability of cultivating equipment to carry enough water.
	Vehicle speed reduction and deflector attachments	F	

[a]Abbreviations used in this column are: VP = very poor, P = poor, F = fair, G = good.

9.12.1.2.1 Open fields. Continuous cropping may be accomplished by repeated plantings of a single specific crop or by a complex process of rotating various crop types on a given field throughout the year. Continuous cropping eliminates the barren period between crops when the soil is exposed to wind erosion. This technique also increases a field's productivity. The cost for continuous cropping depends on water availability, manpower and equipment requirements, crop resource requirements, and crop market value. Continuous cropping is most effective with crops that do not leave a protective stubble or residue, such as cotton, sugar beets, beans, or vegetables. The key limiting factors to continuous cropping are the rainfall and regulated water allocation which restricts the amount of water available for continuous cropping.

Crop residue or stubble left standing after the crop has been harvested can often protect a field from wind erosion. Crop residue also improves soil structure by allowing water to soak into the soil more readily. The degree of protection from the wind depends upon the quantity and type of residue, and cropping practices used with the stubble mulching. No-tillage farming is currently being used as an advanced farming method to prevent soil erosion, increase cropland production, and reduce farming costs.[3] Plowing in the spring instead of in the fall, and planting a new crop in old stubble can reduce fugitive dust.

When a field is barren (after harvest, between crops, or after planting), dust emissions can be reduced by irrigating at frequent intervals. Watering the field forms a thin surface crust which protects the undisturbed soil for some time after the surface has dried. However, the cost and the availability of water for this procedure are important considerations.

Strip cropping and inter-row planting of grains protect erosion-susceptible crops or fallow areas with erosion-resistant crops. For maximum effectiveness, the strips or rows are planted as nearly perpendicular to the prevailing wind direction as possible. This method, if well planned, does not remove any land from cultivation, and may not require any change in cropping practices. Strip cropping may be used most effectively during the early months of crop development.

Windbreaks along the edges of cultivated fields can reduce surface wind velocity and soil blowing. Various physical barriers and vegetation have

been illustrated in a comprehensive U.S. Department of Agriculture publication, Windbreaks for Conservation.[6]

While a field is in the seedling stage or is barren, wind erosion can be reduced considerably with chemical stabilization. Liquid petroleum resin-in-water emulsion is the most effective, durable, and economical stabilizer. Herbicides must be used with stabilizers since stabilizers provide surface layer protection only, and normal weed removal practices would disturb the protective layer.[2] Wind-blown dust emissions from agricultural lands can be reduced by about 90 percent if the surface layer is undisturbed.[6] Table 9.12-3 presents control efficiencies and costs of controls in reducing fugitive emissions.

9.12.1.2.2 Agricultural tilling. Fugitive dust emissions from tilling operations can be controlled by using deflector attachments for farm implements and by reducing the speed of the equipment in the fields. The degree of reduction in emissions by these sources has not been established. Another way to control fugitive dust from tilling operations is to water the field before plowing it. However, this procedure can make soil unworkable and can adversely affect plowed soil.

No-tillage farming is currently being used as an advanced farming method to prevent soil erosion, increase cropland production, and reduce farming costs.[3] Despite the economic benefits of no-tillage farming, there is substantial resistance by farmers to depart from accepted practice.

9.12.2 Transportation Sources

Unpaved roads, paved roads, unpaved airports, and transport of material by truck or train largely make up fugitive dust emission sources that result from transportation activities. These emissions are generated due to vehicular traffic and wind erosion.

9.12.2.1 Source Description and Emissions

9.12.2.1.1 Unpaved roads and airstrips. Fugitive dust emissions from unpaved roads and airstrips are affected by surface texture of the road, road material, surface moisture, and vehicle speed and type. Unpaved roads have been identified as the single largest source of fugitive dust emissions, contributing on the order of 295 Tg per year of particulate emissions.[1]

Fugitive emissions from unpaved roads can be estimated using emission factors developed in EPA Publication AP-42, Compilation of Air Pollutant

Table 9.12-3. COST AND CONTROL EFFICIENCIES FOR FUGITIVE DUST CONTROL TECHNIQUES FOR OPEN FIELDS[3]

Control method	Control efficiency, %	Unit cost, $/unit
Continuous cropping	25	Dependent on crop
Crop residue	10	No data
Limited irrigation	20	1.5 to 4/hectare per year
Stripcropping	27	Dependent on crop
Inter-row planting	15	No data
Windbreaks	6	No data
Spray-on chemical stabilizer	40	8 to 20/hectare per application

Emission Factors, if the silt content of the road surface (percentage by weight of particles smaller than 75 micrometers in diameter), average vehicle speed, and average daily traffic are known. Average vehicle speed and average daily traffic are frequently difficult to determine since there is generally little incentive to study traffic characteristics on roads carrying limited traffic.

Fugitive dust emissions from unpaved roads generally exhibit a particle size distribution consisting of 60 percent of the particles having a diameter of less than 30 micrometers.[3]

Wind erosion and airplane landings and takeoffs cause fugitive dust emissions on unpaved airstrips. Although these emissions are similar to the unpaved roadways, annual landing/take-off (LTO) cycles are one technique for estimating fugitive emissions from unpaved airstrips. The Federal Aviation Administration estimates that approximately 400 to 500 small aircraft operations per year occur at small airports, with a typical value being 500 operations, or 250 LTO cycles.[7]

Factors influencing the emissions from unpaved airstrips include the following:

- Surface texture, measured as percent silt content
- Average LTO speed
- Surface soil moisture as measured by annual number of dry days
- Length of runway used for one complete LTO cycle
- Wind erosion

9.12.2.1.2 Off-road vehicles. Fugitive dust emissions generated due to off-road vehicles occur mostly during weekends in less populated areas. These dust emissions are affected by the silt content of the soil, vehicle speed, and number of wheels per vehicle. Minimal information is available, however, regarding the quantity of fugitive dust generated by off-road vehicles nationwide. In one study, particle size distribution of the fugitive dust due to off-road vehicles was estimated to be the same as that for unpaved roads.[3]

9.12.2.1.3 Unpaved parking lots and truck stops. The fugitive dust emissions from unpaved parking lots and truck stops are influenced by the number of vehicles using the lot/stop each day and the distance traveled by each of the vehicles. The silt content of the soil, varying from 12 to 24

percent depending on the surface, also affects the generation of dust emissions. The particle sizes of the fugitive emissions from the unpaved parking lots and truck stops are estimated to be similar to those from unpaved roads.[3]

9.12.2.1.4 Paved roads. It is estimated that fugitive dust emissions from paved roads contribute 8 Tg per year nationwide.[1] In recent years, considerable attention has been focused on fugitive dust emissions from urban paved roads. Microscopic analysis of samples taken from urban ambient air sampling stations, where total suspended particulate levels are higher than expected, has identified dust emissions from paved streets as a major cause of non-attainment of the primary national ambient air quality standard.[8] Figure 9.12-1 shows the material balance of suspended particulate matter near urban streets. Although primarily generated by vehicular traffic, the dust emissions increase when the wind velocity exceeds the threshold value of about 21 kilometers per hour.[8] Some studies have also shown a direct correlation between the traffic volume and dust deposition due to traffic.[9]

The major street surface contaminants are mineral-like matter similar to common sand and silt. Typically, 78 percent of the material is located within 15 cm of the curb and 88 percent within 30 cm of the curb.[8] The sources of fugitive dust on paved streets are as follows:

- Wind erosion of unpaved parking lots and other exposed areas
- Motor vehicle exhaust, lubricant leaks, and tire wear
- Truck spills
- Street repairs
- Winter sanding and salting
- Vegetation and litter
- Atmospheric dustfall

The silt content (particles smaller than 75 micrometers) is in the 5 to 15 percent range for surface dust from paved streets.[8] The particles under 75 micrometers in diameter include a large percentage of the total heavy metals and pesticides. An American Public Works Association study found that approximately 5 Kg of the dust under 0.31 cm in size comes onto each 30 m of curbless paved roads in Chicago each day; this amount is reduced by a factor of four if curbs are added.[8] Particle size distribution of the dust emissions from paved roads is presented in Table 9.12-4.

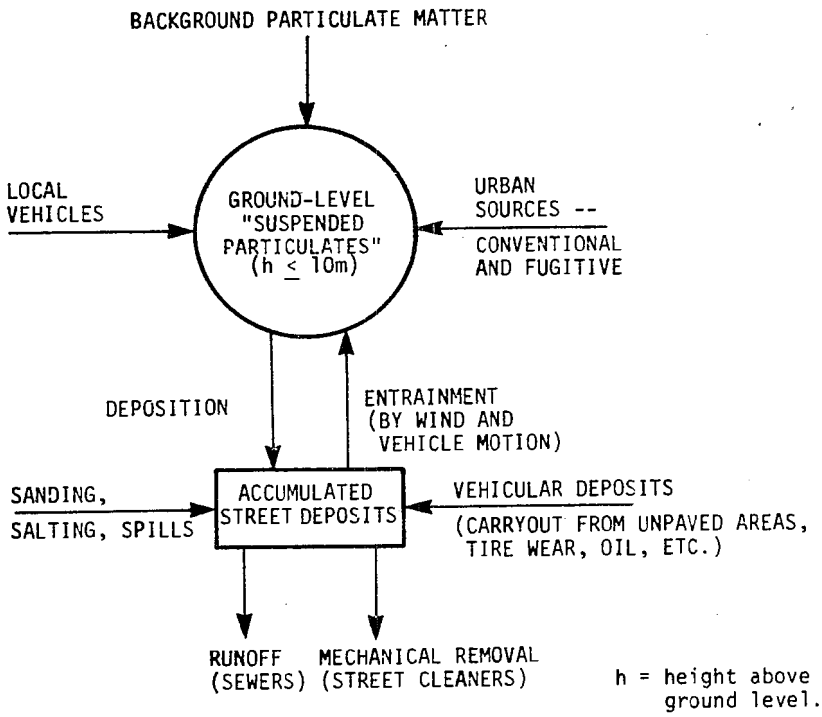

Figure 9.12-1 Diagram of street surface/atmospheric exchange of particulate matter.[8]

Table 9.12-4. PARTICLE SIZE DISTRIBUTION OF THE DUST EMISSIONS FROM PAVED STREETS[3]

Particle size, μm	Weight of the dust emissions, %
greater than 30	10
less than 30	90
less than 5	50

9.12.2.1.5 Transport of material by truck or train. Fugitive dust emissions in the transport of material by truck or train occur due to loading, unloading, and spillage. The control of dust emissions due to loading and unloading is discussed in Section 5 of Volume 1. The dust emissions due to spillage or leakage occur from uncovered trucks and railroad cars. Minimal data are available on the quantity of emissions or particle size distribution of the dust particles as a result of spillage.

The factors affecting fugitive dust emissions from transporting of material, excluding loading and unloading operations, are vehicle speed, silt content of the bulk material transported, moisture content of the material, vehicle body configuration, and condition of the transport vehicle.

9.12.2.2 Control Techniques. Fugitive dust emissions from transportation sources can, in general, be controlled by either temporary methods such as wetting the road surface or permanent methods such as paving the unpaved roads. Table 9.12-5 presents different techniques employed for each type of source and their relative effectiveness.

9.12.2.2.1 Unpaved roads and airstrips. Fugitive dust emissions from unpaved roads can be controlled by paving, oiling, watering, or applying a surface chemical treatment. Paving can be very costly if the roadway has a low-traffic density and is fairly long. However, up to 85 percent control efficiency can be achieved with paving.[10] Maintenance costs could be substantially reduced since it would no longer be necessary to blade and regrade the roadways. Even after paving the streets, reentrainment of particles, requires implementation of control techniques described in subsection 9.12.2.2.4.

Oiling (using locally available petroleum by-products) or surface treatment (using stabilization chemicals on the roadbed) is less costly than paving the roadway. Fugitive dust can be suppressed up to 50 percent by using stabilization chemicals.[2] In one study, chemical stabilizers were sprayed on an unpaved road and mixed to a 7- to 5-cm depth. The stabilizers proved most effective 5 months after application. Effectiveness in suppressing fugitive dust was as high as 95 percent.[6] Stabilizing the roadbed has considerable potential as an interim control procedure, since the roadbed can later be used as a base for paving.

Watering is a much less efficient method of controlling dust on unpaved

Table 9.12-5. FUGITIVE DUST CONTROL METHODS FOR TRANSPORATION SOURCES[5]

Source	Type of control	Relative estimated effectiveness[a]	Remarks or restrictions
Unpaved roads and airstrips	Wet suppression	VP	Temporary
	Stabilization	P	Temporary
	Paving	G	Costly
Unpaved roads	Speed reduction	Variable	
Paved roads	Washing	P	Costly, temporary
	Vacuuming	P	Costly, temporary
Transport of fines by truck or train	Wetting	P	Temporary only
	Covering (tarps)	F	
	Enclosure	G	Problems occur during loading and from leakage, also costly.
Road shoulders	Stabilization	F	
	Vegetation	G	

[a]Abbreviations used in this column are: VP = very poor, P = poor, F = fair, G = good.

roadways because of the high frequency of application required. Watering can be effectively used for temporary control of emissions, or where the watering equipment is already available and roads are confined to a single site, such as construction access roads or mining haul roads.

Reducing vehicle speed on unpaved roads is another technique that can be used for fugitive dust control. Particulate reductions of 62 percent can be achieved by lowering the average speed from 56 km per hour to 32 km per hour.[3]

The cost of controlling fugitive dust emissions from unpaved roads varies from region to region. A study conducted by the City of Seattle Engineering Department has shown that the most cost-effective method of dust control on Seattle roadways is a chip seal when the average daily traffic is over 100 vehicles.[11] Other factors such as traffic density, the length of the road, and the type of controls also affect cost. Table 9.12-6 shows annual maintenance and initial cost per length of roadway in Maricopa County, Arizona.[3] Several studies have shown that chip-seal surfacing is more cost-effective than other road surfacing dust control measures.

The control techniques employed in reducing fugitive dust emissions from unpaved airstrips are similar to those employed in controlling dust from unpaved roads, except for traffic control.

9.12.2.2.2 Off-road vehicles. Feasible control methods to reduce fugitive emissions from off-road vehicles include chemical stabilization, vegetation, and physical covers. Chemical stabilization requires frequent application to maintain the reduction in dust emissions. The effectiveness of vegetation in reducing fugitive dust emissions depends on the density and nature of the growth. In areas that will support heavy vegetation, the dust emissions due to wind erosion may be eliminated. However, in areas less hospitable to plant growth, such as the arid southwest, only native species may be grown (sagebrush, Indian rice grass, sand dropseed). Physical covers have limited application in reducing fugitive emissions from off-road vehicles because of costs.

9.12.2.2.3 Unpaved parking lots and truck stops. Fugitive dust emissions can be controlled from unpaved parking lots by using control techniques similar to those for unpaved roads, as described above. Table 9.12-7 presents

Table 9.12-6. INITIAL COST AND MAINTENANCE COST OF ALTERNATIVE ROAD SURFACES APPLIED BY MARICOPA COUNTY HIGHWAY DEPARTMENT[3]

Road surface type	Initial cost, $/km	Annual maintenance, $/km
Gravel road	10,000	378
Oiled surface (low-cost application)	1,260 to 1,890	1,260 to 1,890
Oiled surface (dust control oil)	3,340	3,340
Chip seal coat	22,000	500
7.5-cm asphalt	34,650 to 63,000	100

Table 9.12-7. EFFECTIVENESS AND COST OF ALTERNATIVE MEASURES TO CONTROL DUST EMISSIONS FROM UNPAVED PARKING LOTS OR TRUCK STOPS[3]

Control	Emission rate,[a] kg/vehicle km	Efficiency of control, %	Initial cost of control, $/1000 m^2	Cost of maintenance, $/1000 m^2
Gravel surface	0.3	50	1080	40
Oil surface (dust control oil)	0.17	75[c]	360	360
Oil surface (low cost application)	0.3	50	140 to 200	140 to 200
Chip seal coat	0[b]	100	2400	55
Asphalt	0[b]	100	3780 to 6880	13

[a]Refers to emission rate for normal passenger vehicle. For truck stops, multiply stated emission rate by N/4, where N = number of wheels on trucks.
[b]This emission rate does not include entrainment of dust loadings off the pavement.
[c]Based on field tests conducted by Arizona Department of Transportation.

control techniques, efficiencies, and costs.

9.12.2.2.4 Paved roadways. The entrainment of the dust from paved roadways can be reduced by two methods: (1) controlling street dust origins, and (2) street cleaning. As previously discussed, noncurbed roads generate more fugitive dust emissions than curbed roads by a factor of four to one. Therefore, providing roadway curbs is one possible control measure. Typical city construction costs for street curbs are about $15 per meter.[3] A further reduction in fugitive emissions from wind erosion is possible by using soil stabilizers in the soil adjacent to the curbs.

Street cleaning can also be used to control dust. In many cities, a flusher attached to the conventional machine sweeper jets water onto the streets, moving materials to the gutter. Broom sweeping is not effective on small particles from reentrainment. Flushing, however, wets the street, causing dust suppression until the surface is completely dry. In one study performed in the New York - New Jersey area, it was found that the particulate concentrations near the streets were consistently lower on days with flushing or days after flushing than on non-cleaning days. The average reduction in the particulate concentration was found to be 16.7 micrograms per m^3 or 15.7 percent.[9]

Many cities have replaced their street cleaning equipment such as broom sweepers with either vaccum sweepers or regenerative air units which are similar to vacuum sweepers. In a study performed in Charlotte, North Carolina, it was found that the air quality in the urban area generally improved after the broom sweepers were replaced with regenerative air sweepers and the streets were flushed following sweeping. The flushers, however, use 6,000 to 10,000 liters of water per kilometer of the street or up to 250,000 liters per day. It is estimated that street flushing could consititute 1 to 2 percent of a city's total water consumption.[3]

9.12.2.2.5 Transport of material by truck or train. Control techniques for dust emissions occuring as a result of loading and unloading of the materials from truck or train are discussed in Section 5 of Volume 1. Dust emissions due to leakage and spillage of the material from trucks can be controlled using tarps as covers on the open trucks. Complete enclosure of the truck body will allow total dust control, although costs may be prohibitive.

9.12.3 Aggregate Storage Piles and Waste Disposal Heaps

Fugitive dust emissions from stockpiles and waste disposal heaps occur due to wind erosion of the exposed surface of a stockpile or heap and the turnover operations of the stockpile which fluctuate with daily or weekly demands. Minimal information is available on the nationwide particulate emission rate of fugitive dust from stockpiles and waste disposal heaps.

9.12.3.1 Source Description and Emissions

9.12.3.1.1 Aggregate storage piles. An inherent part of the operation of many plants that utilize minerals in the aggregate form is the maintenance of outdoor storage piles. Storage piles are usually left uncovered, primarily because of the necessity for frequent transfer of material into or out of storage. Dust emissions occur at several points in the storage cycle: during loading of the material onto the pile, whenever the pile is acted on by strong wind currents, during equipment and vehicle movement in the storage area, and during loadout of material from the pile. These four major emission-producing activities contribute to the fugitive dust emissions in the following proportions:[10]

Activity	Percent of fugitive dust emissions from the storage pile
Loading onto piles	12
Equipment and vehicle movement in the storage area	40
Wind erosion	33
Loadout from piles	15

Fugitive dust emission rates from the stockpile are dependent on: (1) turnover rate for a pile, (2) operations for adding and removing material, and (3) pile configuration. The dust emissions from the stockpile would be chemically the same as the materials in the pile. Particle size distribution of the uncontrolled fugitive emissions from the stockpiles has been found to be somewhat independent of the material stored because only the smaller particles (less than 100 micrometers in size) become airborne. Table 9.12-8 lists typical sizes.

Table 9.12-8. PARTICLE SIZES OF FUGITIVE DUST EMISSIONS FROM AGGREGATE STORAGE PILES[10]

Size range, μm	Percent by weight of emissions
less than 3	30
3 to 30	23
greater than 30	47

9.12.3.1.2 Waste disposal heaps. Mineral mining and benefication produce wastes in the form of overburden and tailings. Coal mining and coal preparation usually produce both fine and coarse waste materials. These materials consist of low grade coal, flyash, carbonaceous and pyritic shale, slate, clay, and sandstone. Metallic tailings such as copper tailing, uranium tailings, and iron tailings often present varied and extreme problems in the application of a control technique due to their variable pH and toxic properties.[12]

As in the case of open storage, emissions arise from dumping and wind erosion across unprotected surfaces. Since the waste heaps are generally not disturbed after dumping, there are no emissions from an activity comparable to loading out of a stockpile. However, there may be emissions from transporting the waste material on-site or from a reclamation process such as landfill covering associated with the waste disposal operation.

The particle size distribution of the fugitive emissions from tailing piles is estimated to be similar to that from aggregate loadout operations; the distribution is presented in Table 9.12-9.

9.12.3.2 Control Techniques. Fugitive dust emissions from stockpiles and waste disposal heaps can be controlled by temporary methods such as wetting or stabilization or by permanent methods such as enclosure for stockpiles or vegetation for waste disposal heaps. Table 9.12-10 presents the types of controls employed and their relative effectiveness.

9.12.3.2.1 Aggregate storage piles. Watering of the stockpiles and surrounding areas is the most common technique, but its effects are quite temporary and watering sometimes adversely affects the capability to handle the material easily. A more effective, longer-duration method of dust control is the addition of chemicals to the water sprayed onto the aggregate. Rather than acting as chemical soil stabilizers to increase cohesion between particles, most of these chemicals work as wetting agents to provide better wetting of particles (smaller than 100 micrometers in size) and longer retention of the moisture film. The system of application can be a continuous spray onto the aggregate during processing or a water truck with hose and spray nozzle.

Enclosing the materials in storage is generally the most effective means of reducing emissions from the stockpile because it allows the emissions from the stockpile to be captured. However, storage bins or silos may be

Table 9.12-9. PARTICLE SIZE DISTRIBUTION FOR DUST EMISSIONS FROM TAILING PILES[3]

Particle size, m	Weight percent of dust emissions
less than 1	30
1 to 2	46
2 to 3	16
3 to 4	6
greater than 4	4

Table 9.12-10. FUGITIVE DUST CONTROL METHODS FOR STOCKPILES AND WASTE DISPOSAL HEAPS[5]

Source	Type of control	Relative estimated effectiveness[a]	Remarks or restrictions
Aggregate storage pile	Wetting	P	Continuous operations on stockpiles preclude effective control.
	Stabilization	P	Same as wetting.
	Enclosure	F to G	May not be practical for all types of operations.
	Wind screen	VP	
	Separation of fines that are sent to enclosed areas	F	Extra cost.
Waste disposal heaps	Wetting	P	Temporary only.
	Stabilization	P to F	Efficiency depends on type of material, stablizer, etc. Temporary.
	Vegetation	F to G	May be expensive due to cost of pretreating (fertilizing, etc.).
	Physical stabilization	F to G	

[a]Abbreviations used in this column are: VP = very poor, P = poor, F = fair, G = good.

very expensive. One alternative to the enclosure of all the material is to screen the material prior to storage, sending the oversize material to open storage and the fines to silos. Windbreaks or partial enclosure of storage piles can reduce wind erosion losses; however, these techniques do not permit capture of the remaining storage pile fugitive dust emissions.

Telescopic chutes, flexible chute extensions, and travelling booms are used to minimize the free fall of material onto the pile and thereby decrease the resulting dust emissions. Dust emissions occuring as a result of loadout activity can be reduced by reclaiming the material from the bottom of the stockpile with a mechanical plow or hopper system. The use of telescoping chutes and flexible chute extensions for piles with high material flow rates may require closer attention because of the possiblity of jamming. Table 9.12-11 shows the control efficiencies for each type of control and the stockpile activity.

Cost estimates for these control techniques vary widely. The capital costs of enclosed storage vary from $107 to $255 per cubic meter of capacity. The wetting agents and their application costs range from $0.01 to $0.05 per Mg.[10]

9.12.3.2.2 Waste disposal heaps. Control methods for fugitive dust emissions from mineral waste heaps include: (a) physical control, (b) chemical binding, and (c) vegetation cover. The applicability and cost of these controls vary, depending on the type of mineral waste and the region in which it is located.

Physical stabilization methods can be used for controlling fugitive dust from inactive waste heaps. It requires the covering of the exposed surface with a material that prevents the wind from disturbing the surface particles. Common physical stabilizer materials for inactive waste heaps include rock soil, crushed or granulated slag, bark, and wood chips. The control efficiency of this technique depends on the type of material and type of stabilizer.

Physical stabilization of tailings with a cover rock or smelter slag can provide complete control of wind-blown emissions. A mixture of soil and rock available from adjacent lands is a more widely used cover material. Soil cover is subject to wind erosion to a lesser degree than the tailings, and permits a habitat for encroachment of local vegetation.[3] The primary

Table 9.12-11. POSSIBLE CONTROL TECHNOLOGY APPLICATIONS FOR OPEN STORAGE PILES[10]

Emission points	Control Procedures	Efficiency, %
Loading onto piles	Enclosure	70 to 99
	Chemical wetting agents or foam	80 to 90
	Adjustable chutes	75
Movement of pile	Enclosure	95 to 99
	Chemical wetting agents	90
	Watering	50
	Traveling booms to distribute material	No estimate
Wind erosion	Enclosure	95 to 99
	Wind screens	Very low
	Chemical wetting agents or foam	90
	Screening of material prior to storage, with fines sent directly to processing or a storage silo	No estimate

drawback to physical covers as wind controls is the high cost of application, particularly when the cover materials are unavailable in the immediate area.

Chemical stabilizers are commercially available and have been employed to create a crusted erosion-resistant layer on mineral waste heaps. Since chemical layers create only a thin skin of protection, they offer only temporary protection, and repeated applications are required periodically to maintain the crust. Chemical stabilizers are typically used in combination with vegetation to form long-term erosion-resistant surfaces over the tailing piles. The chemicals promote the growth of vegetation and protect the seeds during the germination period.

Vegetation can be effectively used to stabilize a variety of exposed surfaces. In many cases, however, modifications must be made to the surface or the surrounding terrain before effective stabilization can occur (e.g., fertilization, pH modification, and slope reduction). Vegetative stabilization for the control of fugitive dust is restricted to inactive areas where the vegetation will not be mechanically disturbed once it is started. These sources can include coal refuse piles and mineral waste disposal heaps.

The difficulty encountered in the application of vegetation stabilization of coal refuse piles occurs as a result of the acidic nature of the wastes and from the slopes of the piles' sides. Thus, chemical or physical treatment of the piles' components must be accomplished prior to effective vegetation stabilization. Chemical treatment usually involves the addition of soil-neutralizing material such as agricultural limestone. Other materials such as flyash, mined phosphate rock, or treated municipal sewage sludge have also been used.[12] Many species of plants have been used for the stablization of waste heaps; e.g., grasses, legumes, trees, shrubs, and vines.

The control efficiency of vegetation stablilization varies considerably with differences in the amount and type of cover established for waste heaps or tailing piles. Estimated efficiencies in the range of 50 to 80 percent have been reported.[12] Table 9.12-12 summarizes the efficiencies and costs of controls in reducing fugitive emissions from tailing piles.

9.12.4 Construction

Construction sources contribute particulate emissions, fugitive in nature, on the order of 24.8 Tg per year nationwide according to one estimate.[1]

Table 9.12-12. EFFECTIVENESS AND COST OF CONTROL MEASURES FOR EMISSIONS FROM TAILINGS PILES[3]

Control measure	Percent of emissions reduced	Cost of measure, $/hectare
Rock or slag cover	100	140-180 (available locally)[b] 385-415 (transported)
Chemical stabilization	80	26-260[a]
Vegetation	25 to 100	40-180
Chemical stabilization, vegetation	85 to 100	40-60

[a]Applications of chemical stabilizers are typically required on an annual basis.
[b]Plus cost of stabilizing the borrow area. Too often the borrow area is ignored and, subsequently, becomes more of a pollution source than the mineral area.

Fugitive dust emissions at construction sites are generated by such operations as land clearing, blasting, ground excavation, cut and fill operations, and construction. Demolition of the existing structures produces fugitive emissions due to the free fall of the material demolished.

9.12.4.1 Source Description and Emissions

9.12.4.1.1 Excavating. Fugitive dust emissions in construction operations are mainly due to excavation, vehicle and equipment operation, and wind erosion of the exposed earth surfaces. Although heavy construction is usually of short duration, earth-moving activity is the major source of fugitive emissions. The exposed earth is susceptible to wind erosion and to dust emissions from infrequent traffic disturbance. The fugitive emissions from excavating are affected by the amount of construction activity and weather conditions.[1]

The dust generation from a mechanical contact process, such as excavating, is generally insensitive to the ambient wind speed; however, wind speed does determine the drift distance of large dust particles and, therefore, the localized impact of the fugitive dust source. On the other hand, the generation of suspendable particles by wind erosion of exposed surface is very sensitive to the wind speed.

9.12.4.1.2 Demolition. The fugitive dust emissions at demolition sites result essentially from the same source as those found on construction sites. These sources involve earth-moving activities and general disturbance of soil. A significant portion of the dust associated with demolition activities may also be generated by falling walls, and an additional significant emission hazard would be the release of asbestos particles when demolition involves friable asbestos materials. The potential asbestos emissions hazard has resulted in the promulgation of demolition and renovation standards for institutional, industrial, and commercial buildings containing a specified amount of friable asbestos material.

9.12.4.2 Control Techniques. Wetting and stabilizing are the common control techniques employed in preventing and/or reducing fugitive dust emissions from excavating and demolition. Table 9.12-13 shows relevent types of controls and their relative effectiveness.

Table 9.12-13. FUGITIVE DUST CONTROL METHODS FOR CONSTRUCTION SOURCES[5]

Source	Type of control	Relative estimated effectiveness[a]	Remarks or restrictions
Excavating	Wetting	VP to P	Continual working precludes effective control.
Heaping of excavated	Wetting Stabilizing	P F to G	Temporary only. Stabilizing with a binder is an effective control method that is applicable to short-term heaping of excavated material.
Vehicle travel	See Table 9.12-5 Unpaved roads		
Demolition	Wetting	P to F	Demolition may cause high, short-term exposure to asbestos from building materials.

[a]Abbreviations used in this column are: VP = very poor, P = poor, F = fair, G = good.

9.12.4.2.1 Excavating. Wetting or watering of construction sites produces a wide variation in apparent control efficiencies. This variation is partly due to the highly variable nature of the emission sources. However, wetting the surfaces of unpaved access trails for construction vehicles and trucks effectively controls dust emissions, provided the surface is kept wet. A study of the effect of watering on construction sites indicates that extensive watering of the soil may reduce emissions from existing construction operations by 60 to 70 percent.[3] The study suggested that wetting of access roads twice a day with an application of 2 liters of water per square meter will suppress dust emissions by 50 percent. Obviously, heavy wetting may cause mud. Unless cleaned up at the site, the mud could be conveyed on to adjacent streets where, after becoming dust again, it would be susceptible to reentrainment by passing vehicles.

Wind erosion of the exposed earth is another major fugitive dust source at a construction site. Soil stabilizers can be effective in reducing wind erosion. Good construction management will only expose earth that is being worked on, thereby reducing possible wind erosion.

Costs for controlling fugitive dust emissions vary from site to site, depending on water availability, traffic, street-sweeping costs, chemical soil stabilizer costs, and the degree of control. Table 9.12-14 shows control efficiencies and their costs in reducing fugitive emissions from excavating activities in the Phoenix, Arizona, area.

9.12.4.2.2 Demolition. The control methods available for demolition sources are essentially the same as those employed at construction sites, as discussed above. Asbestos emissions are the major health concern. The promulgation of National Emissions Standards for Hazardous Air Pollutants requires that asbestos material be first removed prior to wrecking activities by specified handling procedures, and that these materials be wetted prior to removal and handling.[3] The dust created by falling walls of brick, plaster, or concrete may be mitigated by spraying the walls with water before teardown and immediately after the fall. This control method is estimated to reduce fugitive dust emissions from masonry demolition by 10 to 20 percent.[3]

Page Intentionally Blank