EPA-450/3-83-016a

Benzene Emissions from Coke By-Product Recovery Plants - Background Information for Proposed Standards

Emission Standards and Engineering Division

U.S ENVIRONMENTAL PROTECTION AGENCY
Office of Air, Noise, and Radiation
Office of Air Quality Planning and Standards
Research Triangle Park, North Carolina 27711

May 1984

This report has been reviewed by the Emission Standards and Engineering Division of the Office of Air Quality Planning and Standards, EPA, and approved for publication. Mention of trade names or commercial products is not intended to constitute endorsement or recommendation for use. Copies of this report are available through the Library Services Office (MD-35), U.S. Environmental Protection Agency, Research Triangle Park, North Carolina 27711; or, for a fee, from the National Technical Information Services, 5285 Port Royal Road, Springfield, Virginia 22161.

Publication No. EPA-450/3-83-016a

ENVIRONMENTAL PROTECTION AGENCY

Background Information
and Draft
Environmental Impact Statement
for Coke By-Product Recovery Plants

Prepared by:

Jack R. Farmer
Director, Emission Standards and Engineering Division
U.S. Environmental Protection Agency
Research Triangle Park, North Carolina 27711

5/16/84
(Date)

1. The proposed national emission standards would limit emissions of benzene from existing and new coke by-product recovery plants. The proposed standards implement Section 112 of the Clean Air Act and are based on the Administrator's determination of June 8, 1977 (42 FR 29332) that benzene is a hazardous air pollutant. EPA Regions III, IV, and V are particularly affected because most coke by-product recovery plants are located in these regions.

2. Copies of this document have been sent to the following Federal Departments: Labor, Health and Human Services, Defense, Transportation, Agriculture, Commerce, Interior, and Energy; the National Science Foundation; the Council on Environmental Quality; members of the State and Territorial Air Pollution Program Administrators; the Association of Local Air Pollution Control Officials; EPA Regional Administrators; Office and Management and Budget; and other interested parties.

3. The comment period for review of this document is 75 days. Mr. Gilbert H. Wood, Standards Development Branch, telephone (919) 541-5578, may be contacted regarding the date of the comment period

4. For additional information contact:

   Dr. James U. Crowder
   Industrial Studies Branch (MD-13)
   U.S. Environmental Protection Agency
   Research Triangle Park, NC 27711
   Telephone: (919) 541-5601

5. Copies of this document may be obtained from:

   U.S. EPA Library (MD-36)
   Research Triangle Park, NC 27711

   National Technical Information Service
   5285 Port Royal Road
   Springfield, VA 22161

TABLE OF CONTENTS

	Page
Tables	xi
Figures	xv
1. SUMMARY	1-1
1.1 CONTROL OPTIONS/REGULATORY ALTERNATIVES	1-1
1.2 ENVIRONMENTAL IMPACT	1-1
1.3 ECONOMIC IMPACT	1-3
2. INTRODUCTION	2-1
3. THE COKE OVEN GAS BY-PRODUCT INDUSTRY	3-1
3.1 INDUSTRY BACKGROUND	3-1
3.2 PROCESS DESCRIPTIONS AND EMISSIONS	3-4
3.2.1 Process Overview	3-4
3.2.2 Tar Processing	3-10
3.2.2.1 Tar Decanter	3-10
3.2.2.2 Ball Mill	3-14
3.2.2.3 Flushing-Liquor Circulation Tanks	3-14
3.2.2.4 Tar Dewatering	3-15
3.2.2.5 Tar Refining	3-16
3.2.2.6 Pitch Prilling	3-16
3.2.2.7 Tar and Tar Product Storage	3-18
3.2.3 Ammonia Wastewater Processing	3-19
3.2.3.1 Ammonia Liquor Treatment	3-20
3.2.4 Tar Acid (Phenol) Processing	3-20
3.2.5 Final Cooler and Naphthalene Recovery	3-22
3.2.5.1 Direct-Water Final Cooler--Physical Separation of Naphthalene	3-25
3.2.5.2 Tar-Bottom Final Cooler--Naphthalene Recovery in Tar	3-25
3.2.5.3 Wash-Oil Final Cooler--Naphthalene Recovery in Wash Oil	3-29
3.2.5.4 Naphthalene Processing	3-31
3.2.5.5 Emissions from the Final Cooler and Naphthalene Processing Units	3-32
3.2.6 Light-Oil Processing	3-34
3.2.6.1 Light-Oil Recovery	3-35
3.2.6.2 Light-Oil Refining	3-38
3.2.7 Wastewater Processing	3-39
3.2.8 Fugitive Emissions from Leaking Equipment Components	3-41
3.2.9 Summary of Emissions	3-44

TABLE OF CONTENTS (con.)

		Page
3.3	BASELINE REGULATIONS	3-44
	3.3.1 Baseline Regulatory Requirements	3-47
3.4	REFERENCES	3-48
4.	EMISSION CONTROL TECHNOLOGY	4-1
4.1	GAS BLANKETING FROM THE COLLECTING MAIN	4-4
	4.1.1 Applicable Sources	4-4
	4.1.2 Description of Technology	4-4
	4.1.3 Demonstration of Gas Blanketing from the Collection Main	4-10
	4.1.4 Control Efficiency	4-11
4.2	GAS BLANKETING WITH CLEAN COKE OVEN GAS	4-12
	4.2.1 Applicable Sources	4-12
	4.2.2 Description of Technology	4-12
	4.2.3 Demonstration of Gas Blanketing with Clean Coke Oven Gas	4-15
	4.2.4 Control Efficiency	4-17
4.3	NITROGEN OR NATURAL GAS BLANKETING	4-18
	4.3.1 Applicable Sources	4-18
	4.3.2 Description of Technology	4-18
4.4	WASH-OIL SCRUBBERS	4-21
	4.4.1 Applicable Sources	4-21
	4.4.2 Description of Technology	4-21
	4.4.3 Control Efficiency	4-24
4.5	ENCLOSURE	4-29
4.6	CONTROL OF COOLING TOWER AND NAPHTHALENE-HANDLING EMISSIONS	4-29
	4.6.1 Tar-bottom Final Cooler	4-30
	4.6.2 Wash-Oil Final Cooler	4-31
4.7	ALTERNATIVE CONTROL TECHNIQUES	4-33
	4.7.1 Venting to the Suction Main	4-33
	4.7.2 Vapor Condensation	4-37
	4.7.3 Adsorption	4-39
	4.7.4 Absorption	4-42
	4.7.5 Vapor Destruction	4-45
	4.7.6 Vapor Balance Systems	4-46
4.8	CONTROLS FOR FUGITIVE EMISSIONS FROM EQUIPMENT COMPONENTS	4-47
	4.8.1 Leak Detection and Repair Methods	4-47
	4.8.1.1 Leak Detection Techniques	4-47
	4.8.1.1.1 Individual component survey	4-48
	4.8.1.1.2 Unit area survey	4-48
	4.8.1.1.3 Fixed-point monitors	4-49
	4.8.1.1.4 Visual inspections	4-50
	4.8.1.2 Repair Techniques	4-50
	4.8.1.2.1 Pumps	4-50
	4.8.1.2.2 Valves	4-50

TABLE OF CONTENTS (con.)

	Page
4.8.1.2.3 Flanges	4-52
4.8.1.2.4 Relief valves	4-52
4.8.1.2.5 Exhausters	4-54
4.8.1.3 Emission Control Effectiveness of Leak Detection and Repair	4-55
4.8.1.3.1 Definition of a leak	4-55
4.8.1.3.2 Inspection interval	4-56
4.8.1.3.3 Allowable repair time	4-56
4.8.1.3.4 Estimation of reduction of efficiency for valves and pumps	4-57
4.8.1.3.5 Estimation of reduction efficiency for safety relief devices and exhausters	4-57
4.8.2 Preventive Programs	4-60
4.8.2.1 Pumps	4-60
4.8.2.1.1 Dual mechanical seals	4-60
4.8.2.1.2 Sealless pumps	4-62
4.8.2.2 Exhausters	4-63
4.8.2.3 Valves	4-63
4.8.2.4 Safety/Relief Valves	4-64
4.8.2.5 Open-Ended Lines	4-65
4.8.2.6 Closed-Purge Sampling	4-65
4.9 REFERENCES	4-66
5. MODIFICATIONS	5-1
5.1 BACKGROUND	5-1
5.2 PROCESS MODIFICATIONS	5-1
5.2.1 Tar Dewatering	5-2
5.2.2 Tar Storage	5-2
5.3 EQUIPMENT MODIFICATIONS	5-2
5.4 REFERENCES	5-2
6. MODEL PLANTS AND CONTROL OPTIONS	6-1
6.1 MODEL PLANTS OVERVIEW	6-1
6.1.1 Selection of Model Plant Size	6-2
6.1.2 Selection of Model Plant Emission Sources	6-2
6.2 CONTROL OPTIONS OVERVIEW	6-14
6.2.1 Final-Cooler Cooling Tower	6-14
6.2.2 Gas Blanketing System	6-14
6.2.3 Wash-Oil Scrubber	6-16
6.2.4 Light-Oil Sump	6-17
6.2.5 Pumps	6-17
6.2.6 Valves	6-18

TABLE OF CONTENTS (con.)

	Page
6.2.7 Exhausters	6-18
6.2.8 Pressure-Relief Devices	6-18
6.2.9 Sampling Connection Systems and Open-Ended Lines	6-19
7. ENVIRONMENTAL IMPACT	7-1
7.1 BENZENE AIR POLLUTION IMPACT	7-1
7.1.1 Emission Source Characterization	7-1
7.1.2 Development of Benzene Emission Levels	7-1
7.1.3 Impact on Benzene Emissions from New Sources	7-3
7.2 IMPACT OF THE CONTROL OPTIONS ON VOLATILE ORGANIC COMPOUND (VOC) EMISSIONS	7-3
7.3 WATER POLLUTION IMPACT	7-7
7.4 SOLID WASTE DISPOSAL IMPACT	7-7
7.5 ENERGY IMPACT	7-7
7.6 OTHER ENVIRONMENTAL IMPACTS	7-10
7.7 IRREVERSIBLE AND IRRETRIEVABLE COMMITMENT OF RESOURCES	7-10
7.8 IMPACT OF DELAYED STANDARDS	7-10
7.9 REFERENCES	7-10
8. COSTS	8-1
8.1 COST ANALYSIS OF REGULATORY ALTERNATIVES	8-1
8.1.1 Existing Facilities	8-2
8.1.1.1 Rationale	8-2
8.1.1.2 Tar Decanter, Tar-Intercepting Sump, and Flushing-Liquor Circulation Tank	8-4
8.1.1.3 Excess Ammonia Liquor Tanks	8-11
8.1.1.4 Light-Oil Plant	8-11
8.1.1.5 Light-Oil and BTX Storage Tanks	8-14
8.1.1.6 Tar-Collecting, Tar Storage, and Tar-Dewatering Tanks	8-16
8.1.1.7 Light-Oil Sump	8-23
8.1.1.8 Pure Benzene Storage Tanks	8-23
8.1.1.9 Final Cooler	8-27
8.1.1.10 Wash-Oil Final Cooler	8-30
8.1.1.11 Fugitive Emissions from Equipment Components	8-30
8.1.2 New Facilities	8-33
8.1.3 Modified Sources	8-36
8.1.4 Summary of Estimated Control Costs	8-36
8.1.5 Comparison of Actual and Estimated Capital Costs	8-43
8.2 OTHER COST CONSIDERATIONS	8-44
8.3 REFERENCES	8-45

TABLE OF CONTENTS (con.)

	Page
9. ECONOMIC IMPACT	9-1
9.1 INDUSTRY PROFILE	9-1
9.1.1 Introduction	9-1
9.1.1.1 Definition of the Coke Industry	9-2
9.1.1.2 Brief History of the Coke Industry in the Overall Economy	9-3
9.1.1.3 Size of the Iron and Steel Industry	9-3
9.1.2 Production	9-7
9.1.2.1 Product Description	9-7
9.1.2.2 Production Technology	9-7
9.1.2.3 Factors of Production	9-10
9.1.3 Demand and Supply Conditions	9-14
9.1.4 Market Structure	9-16
9.1.4.1 Concentration Characteristics and Number of Firms	9-18
9.1.4.2 Integration Characteristics	9-27
9.1.4.3 Substitutes	9-27
9.1.4.4 Pricing History	9-28
9.1.4.5 Market Structure Summary	9-30
9.1.5 Financial Performance	9-30
9.1.6 Projections	9-34
9.1.7 Market Behavior: Conclusions	9-39
9.2 ECONOMIC IMPACT OF REGULATORY ALTERNATIVES	9-40
9.2.1 Summary	9-40
9.2.2 Methodology	9-41
9.2.2.1 Supply Side	9-43
9.2.2.1.1 Data base	9-43
9.2.2.1.2 Output relationships	9-44
9.2.2.1.3 Operating costs	9-44
9.2.2.1.4 Capital costs	9-46
9.2.2.1.5 Environmental costs	9-48
9.2.2.1.6 Coke supply function--existing facilities	9-49
9.2.2.1.7 Coke supply function--new facilities	9-52
9.2.2.2 Demand Side	9-55
9.2.2.3 Synthesis	9-57
9.2.2.4 Economic Impact Variables	9-57
9.2.3 Furnace Coke Impacts	9-61
9.2.3.1 Price Effects	9-64
9.2.3.2 Production and Consumption Effects	9-66
9.2.3.3 Coal Consumption and Employment Effects	9-66
9.2.3.4 Financial Effects	9-68
9.2.3.5 Battery and Plant Closures	9-77
9.2.4 Foundry Coke Impacts	9-79
9.2.4.1 Price and Production Effects	9-79

TABLE OF CONTENTS (con.)

	Page
9.2.4.2 Coal Consumption and Employment Effects	9-83
9.2.4.3 Financial Effects	9-83
9.2.4.4 Battery and Plant Closures	9-87
9.3 POTENTIAL SOCIOECONOMIC AND INFLATIONARY IMPACTS	9-91
9.3.1 Compliance Costs	9-91
9.3.2 Prices and Consumer Costs	9-93
9.3.3 Balance of Trade	9-93
9.3.4 Community Impacts	9-95
9.3.5 Small Business Impacts	9-95
9.3.6 Energy	9-98
9.4 REFERENCES	9-98
APPENDIX A EVOLUTION OF THE PROPOSED STANDARDS	A-1
APPENDIX B INDEX TO ENVIRONMENTAL IMPACT CONSIDERATIONS	B-1
APPENDIX C EMISSION MEASUREMENTS AND ESTIMATES	C-1
APPENDIX D EMISSION MEASUREMENTS AND CONTINUOUS MONITORING	D-1
APPENDIX E METHODOLOGY FOR ESTIMATING LEUKEMIA INCIDENCE AND MAXIMUM LIFETIME RISK FROM EXPOSURE TO BENZENE EMISSIONS FROM COKE OVEN BY-PRODUCT RECOVERY PLANTS	E-1
APPENDIX F SUPPLEMENTAL INFORMATION FOR THE COST ANALYSIS	F-1

TABLES

Number		Page
1-1	Assessment of Environmental and Economic Impacts for Each Regulatory Alternative Considered.	1-2
3-1	Production and Consumption History of Coke Plants in the United States	3-3
3-2	Coke and Coal Chemicals Produced by United States Coke Oven Plants in 1976	3-5
3-3	Processes in the By-Product Recovery Plants	3-6
3-4	Fate of Coke Oven By-Products	3-9
3-5	A Comparison of Emissions from Leaks from By-Product Plants to Those from Petroleum Refineries	3-43
3-6	Benzene Emission Factors Derived from VOC Emission Factors.	3-43
3-7	Uncontrolled Benzene Emission Factors for Coke By-Product Plants.	3-45
3-8	States Requiring Vapor Controls on Storage Tanks and Separators.	3-46
3-9	California Regulations for Coke Oven By-Product Plants.	3-46
4-1	Emission Sources and Control Techniques	4-5
4-2	Partition Factors for Benzene and Xylene in Wash Oil.	4-26
4-3	Percent Control of Benzene in a Wash-Oil Spray Chamber	4-26
4-4	Hierarchy of Equipment Types Based on Emissions Rate.	4-49
4-5	Percent Emission Reduction of Leak Detection and Repair Program for Valves and Pumps	4-58
4-6	Percent Emission Reduction of Leak Detection and Repair Program for Safety Relief Valves and Exhausters.	4-58
6-1	Coke By-Product Recovery Plant Processes.	6-5
6-2	Emission Sources for Coke By-Product Recovery Model Plants.	6-9
6-3	Number of Process Units at Coke By-Product Recovery Model Plants	6-10
6-4	Number of Equipment Components at Coke By-Product Recovery Model Plants	6-13
6-5	Coke By-Product Plant Benzene Emissions Sources and Control Options	6-15

TABLES (con.)

Number		Page
7-1	Estimated National Baseline Benzene Emissions from Coke Oven By-Product Recovery Plants.	7-2
7-2	The Effect of Control Options on Reducing Benzene Emissions at Coke Oven By-Product Plants	7-4
7-3	Relative Concentrations of Organics Other than Benzene-to-Benzene Concentrations.	7-5
7-4	The Effect of Benzene Control Options on Reducing VOC Emissions Oven By-Product Plants	7-6
7-5	Energy Use at a Model By-Product Plant	7-9
7-6	Emissions of Coke Oven Gas From Selected Coke Oven By-Product Plant Sources.	7-9
8-1	Number of Units at the Model Plants.	8-3
8-2	Capital Cost Items	8-5
8-3	Annualized Cost Items.	8-7
8-4	Costs for Gas Blanketing of Tar Decanter, Tar-Intercepting Sump, and Flushing-Liquor Circulating Tank	8-10
8-5	Costs for Gas Blanketing Ammonia Liquor Storage Tanks.	8-12
8-6	Costs for Wash-Oil Vent Scrubber for Ammonia Liquor Storage Tanks	8-13
8-7	Costs for Gas Blanketing of Light-Oil Condenser, Light-Oil Decanter, Wash-Oil Decanter, and Circulation Tank	8-15
8-8	Costs for Gas Blanketing of Light-Oil and BTX Storage Tanks.	8-17
8-9	Costs of Wash-Oil Vent Scrubber for Light-Oil and BTX Storage Tanks.	8-18
8-10	Costs for Gas Blanketing of Tar Collecting, Storage, and Dewatering Tanks.	8-19
8-11	Capital Cost Estimate for a Wash-Oil Condenser and Scrubber for Tar Storage and Dewatering-Model Plant 2.	8-22
8-12	Annualized Cost Estimates for a Wash-Oil Condenser and Scrubber for Tar Storage and Dewatering.	8-24
8-13	Costs for Covering Light-Oil Sump.	8-25
8-14	Costs for Nitrogen or Natural Gas Blanketing of Pure Benzene Storage Tanks	8-26
8-15	Costs of Wash-Oil Vent Scrubber for Benzene Storage Tanks.	8-28
8-16	Costs for Installing a Tar-Bottom Final Cooler	8-29
8-17	Costs of Installing a Wash-Oil Final Cooler.	8-31
8-18	Model Plants for Fugitive Benzene Emissions from Equipment Components.	8-32

TABLES (con.)

Number		Page
8-19	Capital Costs for Control of Equipment Leaks	8-34
8-20	Annualized Costs for Control of Fugitive Emissions from Equipment Components	8-35
8-21	Estimated Distribution of Types of Coke Plant Emission Sources	8-37
8-22	Emission Reductions, Costs, and Cost Effectiveness for Model Plant 1	8-38
8-23	Emission Reductions, Costs, and Cost Effectiveness for Model Plant 2	8-39
8-24	Emission Reductions, Costs, and Cost Effectiveness for Model Plant 3	8-40
8-25	Nationwide Emission Reductions, Costs, and Cost Effectiveness	8-42
9-1	Coke Industry Foreign Trade	9-4
9-2	Coke Production in the World	9-5
9-3	Value of Shipments, SIC 3312	9-6
9-4	Value Added, SIC 3312	9-8
9-5	Potential Maximum Annual Capacity of Oven Coke Plants in the United States on July 31, 1979	9-11
9-6	Typical Cost Breakdowns: Furnace Coke Production and Hot Metal (Blast Furnace) Production	9-12
9-7	Employment in the By-Product Coke Industry	9-13
9-8	Coke Rate	9-17
9-9	Coke Plants in the United States, January 1980	9-19
9-10	Interregional Coke Shipments in 1977	9-25
9-11	Percent of Coke Capacity Owned by Top Firms (January 1980)	9-26
9-12	Comparison of Coal Prices and Domestic and Imported Coke Prices	9-29
9-13	Financial Information on Coke-Producing Firms, 1978	9-31
9-14	Financial Ratios for Coke-Producing Firms	9-33
9-15	Summary of the Projections from the Linear Model	9-36
9-16	Summary of Steel Industry Projections	9-37
9-17	Projections of Coke Capacity Requirements--1985, 1990, and 1995	9-38
9-18	Estimated Capital Costs of New Batteries	9-47
9-19	Estimates of Elasticities of Steel and Coke Markets	9-56
9-20	Economic Impact Variables and Affected Sectors	9-59
9-21	1983 Baseline Values for Economic Impact Analysis--Furnace Coke	9-62
9-22	Baseline Control Costs--Furnace Coke	9-63
9-23	Price Effects of Regulatory Alternatives--Furnace Coke, 1983	9-65
9-24	Production and Consumption Effects of Regulatory Alternatives--Furnace Coke, 1983	9-67

TABLES (con.)

Number		Page
9-25	Coal Consumption and Employment Effects of Regulatory Alternatives--Furnace Coke, 1983	9-69
9-26	Industry Capital Requirements of Regulatory Alternatives--Furnace Coke, 1983.	9-70
9-27	The Ratio of Incremental Capital Costs to Net Income--Furnace Coke Producers, 1983.	9-72
9-28	The Ratio of Cumulative Capital Costs to Net Income--Furnace Coke Producers, 1983.	9-73
9-29	The Ratio of Incremental Capital Costs to Net Investment--Furnace Coke Producers, 1983.	9-75
9-30	The Ratio of Cumulative Capital Costs to Net Investment--Furnace Coke Producers, 1983.	9-76
9-31	1983 Baseline Values for Economic Impact Analysis--Foundry Coke.	9-80
9-32	Baseline Control Costs--Foundry Coke.	9-81
9-33	Price and Quantity Effects of Regulatory Alternatives, 1983.	9-82
9-34	Coal Consumption and Employment Effects of Regulatory Alternatives--Foundry Coke, 1983	9-84
9-35	Industry Capital Requirements of Regulatory Alternatives--Foundry Coke, 1983.	9-85
9-36	The Ratio of Incremental Capital Costs to Net Income--Foundry Coke Producers, 1983.	9-86
9-37	The Ratio of Cumulative Capital Costs to Net Income--Foundry Coke Producers, 1983.	9-88
9-38	The Ratio of Incremental Capital Costs to Net Investment--Foundry Coke Producers, 1983.	9-89
9-39	The Ratio of Cumulative Capital Costs to Net Investment--Foundry Coke Producers, 1983.	9-90
9-40	Compliance Costs of Regulatory Alternatives Under Scenario A, 1983.	9-92
9-41	Coke, Steel, Ferrous Foundry, and Consumer Products Price Effects of Regulatory Alternatives Under Scenario A, 1983.	9-94
9-42	Employment Data for U.S. Firms Operating Coke Ovens.	9-97

FIGURES

Number		Page
3-1	Flow plan and material balance of a representative coke by-product recovery plant.	3-8
3-2	Tar separation flow diagram.	3-11
3-3	Tar refining flow diagram.	3-17
3-4	Ammonia stills	3-21
3-5	Solvent extraction and steam-stripping dephenolization processes.	3-23
3-6	Direct-water final cooler--physical separation of naphthalene.	3-26
3-7	Tar-bottom final cooler--naphthalene recovery in tar	3-27
3-8	Wash-oil final cooler recovery system.	3-30
3-9	Wash-oil absorption of light oil with light-oil rectification.	3-36
4-1	Vapor flow for a gas blanketing control system	4-2
4-2	Gas blanketing of tar decanters and flushing-liquor tank from the collecting main.	4-7
4-3	Seal and vent arrangement for tar decanter	4-9
4-4	Gas blanketing of a light-oil recovery system.	4-14
4-5	Schematic of a nitrogen or natural gas blanketing system	4-19
4-6	Wash-oil scrubber for vents on tar storage, ammonia liquor storage, and sump	4-23
4-7	Mixer settler.	4-32
4-8	Conversion of a final cooler from water to wash oil cooling medium	4-34
4-9	Negative-pressure system from tar-collecting tanks to suction main.	4-36
4-10	Surface condenser unit used on a tank handling warm volatile, organic materials.	4-38
4-11	Refrigeration vapor recovery unit.	4-38
4-12	Sketch of a vertical adsorber with two cones	4-41
4-13	Cross-section of an adsorber with four beds of adsorbed carbon.	4-41
4-14	Sketch of a two-unit, fixed-bed adsorber	4-41
4-15	Packed tower	4-43
4-16	Schematic diagram of a bubble cap tray tower	4-43
4-17	Venturi absorber with cyclone-type liquid separator.	4-44
6-1	Distribution of plant size as a function of coke capacity	6-3
6-2	Coke oven by-product recovery, Model Plant 1	6-6
6-3	Coke oven by-product recovery, Model Plant 2	6-7

FIGURES (con.)

Number		Page
6-4	Coke oven by-product recovery, Model Plant 3	6-8
8-1	Tar decanter	8-9
8-2	Conceptual design of a wash-oil scrubber for tar dewatering and tar storage at Model Plant 2.	8-21
9-1	Uses of oven coke as percents of total coke consumption.	9-9
9-2	U.S. apparent consumption of coke.	9-15
9-3	Coke plants in the United States, 1980	9-23
9-4	Economic impact model.	9-42
9-5	Coke plant cost centers.	9-45
9-6	Estimated average cost of furnace coke production as a function of plant production, 1980.	9-50
9-7	Estimated average cost of foundry coke production as a function of plant production, 1980.	9-51
9-8	Marginal and average cost functions for furnace coke, 1980	9-53
9-9	Marginal and average cost functions for foundry coke, 1980	9-54
9-10	Coke supply and demand	9-58
9-11	Coke demand and supply with and without regulatory alternatives	9-60

1. SUMMARY

1.1 CONTROL OPTIONS/REGULATORY ALTERNATIVES

Regulatory alternatives representing selected combinations of control options were used to determine the economic impact of differing control strategies.

Regulatory Alternative I represents baseline control with no national emission standard. Regulatory Alternative II represents the tar-bottom final-cooler control option; the gas blanketing control option for tar decanters, tar-intercepting sump, flushing-liquor circulation tank, tar storage tank, excess-ammonia liquor storage tank, light-oil decanter, light-oil condenser, wash-oil decanter, and the wash-oil circulation tank; a wash-oil scrubber for light-oil or benzene storage; a sealed cover for the light-oil sump; monthly monitoring for pumps and valves; quarterly monitoring for exhausters; and equipment controls for pressure relief devices, sampling connections, and open-ended lines. Regulatory Alternative III was chosen as a more stringent combination of controls that would yield a greater emission reduction. The control options chosen for analysis as Regulatory Alternative III would include the use of a wash-oil final cooler system, and the gas blanketing of light-oil and benzene storage tanks, in addition to the controls applied to other sources under Regulatory Alternative II.

1.2 ENVIRONMENTAL IMPACT

Table 1-1 summarizes the environmental impacts of the regulatory alternatives. At regulatory baseline (Regulatory Alternative I), the nationwide benzene emissions are estimated at 29,000 Mg/yr. The

TABLE 1-1. ASSESSMENT OF ENVIRONMENTAL AND ECONOMIC IMPACTS FOR EACH REGULATORY ALTERNATIVE CONSIDERED

	Air impact[a]	Water impact[a]	Solid waste impact[a]	Energy impact[a]	Noise impact	Economic impact[a]
Regulatory Alternative I	0	0	0	0	0	0
Regulatory Alternative II	+3	0	0	+3	0	+1
Regulatory Alternative III	+4	-1	0	+4	0	-4

[a]Long-term impact.

KEY: + = Beneficial impact
- = Adverse impact
0 = No impact
1 = Negligible impact
2 = Small impact
3 = Moderate impact
4 = Large impact

combination of control options under Regulatory Alternative II would reduce benzene emissions to about 3,500 Mg/yr. The control options for Regulatory Alternative III will reduce benzene emissions to about 700 Mg/yr.

The only alternative that may affect water pollution is Regulatory Alternative III. This alternative by requiring use of indirect cooling (wash-oil final cooler) would tend to increase the cyanide load in wastewater treated before discharge. However, this impact is expected to be negligible.

Both Regulatory Alternatives II and III would have a beneficial energy impact resulting from recovered coke oven gas emissions via the gas blanketing control options.

1.3 ECONOMIC IMPACT

The derivation of costs and economic impacts was based on a plant-by-plant cost analysis at 1980 coke production capacities. There is no annualized and capital cost for benzene emission controls associated with reaching the regulatory baseline; i.e., Regulatory Alternative I.

A net credit in total annualized cost to the industry would result with the implementation of Regulatory Alternative II due to anticipated fuel savings and increased product. Regulatory Alternative II may require a nationwide capital investment of about $31.5 million in 1982 dollars above the regulatory baseline, including the cost of monitoring instrumentation. Regulatory Alternative III may require a nationwide capital investment of about $170 million in addition to Regulatory Alternative II and a total annualized cost of about $48 million/yr above the costs of Regulatory Alternative II.

[NOTE: Since this document was written, 13 plants have permanently closed and capacities have changed for some of the other plants. Therefore, the estimated impacts summarized in this chapter would change accordingly.]

2. INTRODUCTION

EPA announced a decision to list benzene as a hazardous air pollutant under Section 112 of the Clean Air Act on June 8, 1977 (42 FR 29332). As a result, standards controlling benzene emissions are under development. The standard-setting process involves identifying benzene emission sources and options for controlling them. The approach in determining the levels for recommended standards is to select as the minimum control level best available technology (BAT), considering costs, nonair quality health, environmental impacts, and energy requirements of the control options. Then the additional reductions in health risks and the cost, economic, environmental, and energy impacts that would result from requiring controls more stringent than BAT are examined to determine whether more control would be necessary to eliminate unreasonable residual risks. This document provides the background information necessary for this evaluation of benzene emissions from coke by-product recovery plants.

3. THE COKE OVEN GAS BY-PRODUCT INDUSTRY

3.1 INDUSTRY BACKGROUND

Coke is the primary residue that remains when a blend of pulverized coking coals is heated gradually to high temperatures in the absence of air (900° to 1,000° C) for 10 to 40 hours. This process, called destructive thermal distillation, produces a spectrum of chemicals, including hydrogen, methane, benzene, cyanides, and polynuclear aromatic hydrocarbons (PAH's). The coke oven by-product plant recovers these chemicals. Coke is one of the basic materials used in blast furnaces to convert iron ore into iron, and about 90 percent of the coke produced in the United States is used for this purpose. Most of the iron is subsequently processed into steel, and an adequate supply of coke is necessary to ensure a continuing steel supply. Coke is also used by a number of other industries, principally iron foundries, nonferrous smelters, and chemical plants.

Blast furnace coke results when coal is coked for approximately 18 hours, and foundry coke, which is less common and of higher quality, results when coal is coked for approximately 30 hours. Coke is produced in the United States by two methods: the original method, termed the beehive process, and the contemporary method, called the by-product recovery or slot oven process. Approximately 99 percent of the coke produced in the United States is made by the slot oven process. This conversion of coal to coke is performed in long, narrow slot ovens that are designed and operated to permit separation and recovery of the volatile materials (the by-products) evolved from the coal during the coking process. In 1975, it was estimated that the 62 slot oven plants operating consisted of 231 batteries containing 13,324 ovens.[1] This number decreased to 60 by-product recovery (slot oven) coke plants operating in the United States during 1978[2] but increased to 64 in 1979.[3]

The coke industry has two sectors, and plants are classified generally as furnace or merchant plants. In 1979, 45 furnace plants supplied over 90 percent of the total slot oven production, and they were owned by or affiliated with iron- and steel-producing companies. Consequently, firms in this sector produce coke primarily for consumption in their own blast furnaces, although they engage in some intercompany sales among steel firms with excesses or deficits in coke capacity.

Independent plants that produce coke for sale on the open market are typically owned by chemical or coal firms and are referred to as merchant coke producers. However, the 19 merchant plants operating in 1979 accounted for less than 9.3 percent of the total coke produced. The 19 merchant plants in operation sell most of their products to other firms engaged in blast furnace, foundry, and nonferrous smelting operations. Chemical companies have entered the coke industry to obtain the by-product hydrocarbon gases that are released when coal is converted into coke, and coal firms have entered the coke industry as a form of downstream vertical integration.

In 1979, 48.0 million metric tons (or teragrams, Tg) of coke were produced in slot ovens in the United States.[3] This rate is less than the 1977 production of 48.5 Tg and is 8 percent less than the 1976 production of 52.3 Tg.[4] Also in 1979, the most recent year for which complete data are available, 90.7 percent of this total (43.5 Tg) was produced at furnace plants. In 1976, the production of coke from the beehive process accounted for only 0.5 Tg or approximately 1 percent of total coke production during that year,[5] and the same oven continued production in 1979.[6] A production and consumption history of coke in the United States since 1970 is presented in Table 3-1.

Although coke was produced in 19 States in 1979, 58 percent of this coke was produced in three eastern States: Pennsylvania, Ohio, and Indiana.[7] Pennsylvania, with 13.0 Tg of output, was the leading coke-producing State and accounted for 27 percent of U.S. coke oven production. Ohio and Indiana each produced 7.5 Tg of coke. The relative amounts of coke produced in the various States have changed very little in the past decade. The geographical distribution of coke oven facilities reflects the locations of coal deposits and steelmaking facilities.

TABLE 3-1. PRODUCTION AND CONSUMPTION HISTORY OF COKE IN THE UNITED STATES[a]

Year	Number of merchant plants	Number of furnace plants	Total number of coke oven plants	U.S. oven coke produced			Percent change in production from previous year	Coke imports	U.S. oven coke uses			Coke consumption[b]			Blast furnace iron produced	Percent change in production from previous year
				Merchant plant	Furnace plant	Total			By producing companies	For commercial sales	Total	In iron furnaces	All other purposes	Total		
1970	15	48	63	5.37	54.19	59.56	+2.5	0.14	51.99	7.76	59.25	52.75	4.59	57.34	83.28	-3.9
1971	16	48	64	5.05	46.36	51.41	-13.7	0.15	46.14	6.51	52.65	46.72	4.71	51.43	74.12	-11.0
1972	14	48	62	5.11	49.20	54.39	+5.6	0.16	48.46	6.35	54.81	49.54	4.93	54.47	81.10	+9.4
1973	14	48	62	4.78	52.82	57.60	+6.1	0.997	52.59	6.88	59.47	55.08	4.58	59.66	91.81	+13.2
1974	14	48	62	4.64	50.47	55.11	-4.3	3.17	49.12	6.20	55.32	53.02	5.13	58.15	86.99	-5.2
1975	14	48	62	4.28	46.97	51.25	-7.0	1.63	42.31	5.26	47.57	44.29	4.42	48.71	72.48	-16.7
1976	13	48	61	3.95	48.42	52.37	+2.2	1.18	47.04	3.93	50.97	46.77	4.78	51.55	78.83	+8.8
1977	12	48	60	3.33	44.80	48.13	-8.0	1.90	44.69	3.52	48.21	43.99	5.08	49.07	73.75	-6.4
1978	12	48	60	3.09	40.66	43.75	-9.1	5.17	47.93	3.12	51.05	47.32	3.73	51.05	79.56	+7.9

[a]All quantities in million megagrams unless otherwise noted.

[b]Coke consumption figures include beehive coke.

The separation and recovery of the by-products evolved during the coking process are either used within the facility or marketed. Typical products and by-products that resulted from the 1979 production of United States slot oven coke are presented in Table 3-2.[8]

3.2 PROCESS DESCRIPTIONS AND EMISSIONS

The coke by-product recovery industry uses different technologies to recover the volatiles emitted during the coking process. The current domestic application of these technologies is summarized in Table 3-3.

3.2.1 Process Overview

Coke by-product recovery consists of the separation and recovery of various components from the coke oven gas. These components include coal tar, pitch, ammonium sulfate, naphthalene, and light oil.

A simplified flow plan and material balance of a representative by-product plant is given in Figure 3-1. This figure is not intended to indicate the composition of each stream in a by-product plant but to present an overview of the types of materials present in various sections of the by-product plant. The material balance is based on a plant that produces 5,000 Mg of coke per day. The diagram outlines the process steps; more detailed process information is included in later subsections. Table 3-4 summarizes the fate of the major coke oven by-products from this representative plant.

The gases leave the coke ovens at approximately 700° C. Coke ovens are maintained at a slightly positive pressure (1 mm water) to prevent air infiltration. Immediately after the gas leaves the oven, it is subjected to a cooling spray to reduce the temperature of the gas and introduce a collecting medium for the condensed tar. After a short duct run, the gas, which remains above atmospheric pressure, passes through an askania valve and enters the suction main. At this point, the gas has been cooled to approximately 100° C and much of the water, tar, ammonia, and other compounds has been condensed.

Further condensation occurs in the primary cooler. The tar is separated from the water in a tar decanter. The water layer is commonly known as the ammonia liquor or flushing liquor. If phenol is recovered from the ammonia liquor, it is often absorbed in an organic solvent before the ammonia

TABLE 3-2. COKE AND COAL CHEMICALS PRODUCED BY UNITED STATES COKE OVEN PLANTS IN 1976

Product	Total production	Yield (Mg of coal charged)
Coke	48.0 Tg	0.6843 net Mg
Breeze	3.35 Tg	0.0477 net Mg
Crude tar	2.239 million ℓ	32.2 ℓ
Crude light oil	663.3 million ℓ	10.4 ℓ
Ammonia (sulfate equivalent)	0.426 Tg	7.81 kg
Coke oven gas	23.62 billion m^3	339.6 m^3

TABLE 3-3. PROCESSES IN THE BY-PRODUCT RECOVERY PLANTS

Plant and address	Coke production capacity (Mg/day)	Tar decanter	Tar dewatering	Tar refining	Light-oil storage	Primary cooler	Final cooler: Wash oil	Final cooler: Direct water	Final cooler: Tar bottom	Final cooler: Naphthalene	Light-oil decanter	BTX (intermediate light oil)	Benzene storage
1. Alabama By-Products, Tarrant, AL	1,938	P	P	NP	P	P	NP	NP	P	NP	P	NP	NP
2. Empire Coke, Holt, AL	328	P	P	NP	P	P	NP	P	NP	P	P	P	NP
3. Koppers Co., Woodward, AL	1,538	P	P	NP	P	P	NP	NP	P	NP	P	NP	NP
4. Republic Steel, Gadsden, AL	2,072	P	P	NP	P	P	NP	P	NP	P	P	NP	NP
5. Republic Steel, Thomas, AL	862	P	P	NP	P	P	NP	P	NP	P	P	NP	NP
6. Jim Walter, Birmingham, AL	1,362	P	P	P	P	P	NP	NP	P	NP	P	P	NP
7. U.S. Steel, Fairfield, AL	4,324	P	P	P	P	P	NP	P	NP	P	P	NP	NP
8. Kaiser Steel, Fontana, CA	4,175	P	P	NP	P	P	NP	NP	P	NP	P	P	NP
9. CF&I, Pueblo, CO	2,433	P	P	P	P	P	NP	NP	P	NP	P	NP	P
10. National Steel, Granite City, IL	1,951	P	P	NP	P	P	NP	P	NP	P	P	P	NP
11. Interlake, S. Chicago, IL	1,416	P	P	NP	P	P	NP	P	NP	P	P	NP	NP
12. Republic Steel, S. Chicago, IL	1,203	P	P	NP	P	P	NP	NP	P	NP	P	NP	NP
13. Bethlehem Steel, Burns Harbor, IN	4,572	P	P	NP	NP	P	NP	NP	NP	NP	NP	NP	NP
14. Citizens Gas & Coke Utility, Indianapolis, IN	1,305	P	P	NP	NP	P	NP	NP	NP	NP	NP	NP	NP
15. Indiana Gas & Chemical, Terre Haute, IN	363	P	P	NP	P	P	NP	P	NP	P	P	NP	NP
16. Inland Steel, E. Chicago, IL	7,731	P	P	NP	P	P	NP	NP	P	NP	P	NP	NP
17. J&L Steel, E. Chicago, IL	3,772	P	P	NP	P	P	NP	P	NP	P	P	P	NP
18. U.S. Steel, Gary, IN	9,145	P	P	P	P	P	NP	P	NP	P	P	NP	NP
19. Allied Chemical, Ashland, KY	2,632	P	P	NP	P	P	NP	NP	P	NP	P	NP	NP
20. Bethlehem Steel, Sparrows Point, MD	7,057	P	P	NP	P	P	P	NP	NP	NP	P[b]	NP	P
21. Detroit Coke, Detroit, MI	1,687	P	P	NP	NP	P	NP	NP	NP	NP	NP	NP	NP
22. Ford Motor Co., Dearborne, MI	3,035	P	P	NP	P	P	NP	NP	NP	P	P	NP	NP
23. National Steel, Detroit, MI	5,280	P	P	NP	P	P	NP	P	NP	P	P	P	NP
24. Carondolet Corp., St. Louis, MO	636	P	P	NP	NP	P	NP	NP	NP	NP	NP	NP	NP
25. Tonawanda Coke Co., Buffalo, NY	818	P	P	NP	NP	P	NP	NP	P	NP	NP	NP	NP
26. Bethlehem Steel, Lackawanna, NY	4,038	P	P	NP	P	P	NP	NP	P	NP	P	P	NP
27. Donner-Hanna Coke, Buffalo, NY	2,356	P	P	NP	P	P	NP	NP	P	NP	P	NP	NP
28. Ironton Coke, Ironton, OH	2,351	P	P	NP	P	P	NP	NP	P	NP	P	NP	NP
29. Armco Steel, Hamilton, OH	1,484	P	P	NP	P	P	NP	P	NP	P	P	NP	NP

Footnotes on next page.

(continued)

TABLE 3-3. (continued)

Plant and address	Coke production capacity (Mg/day)	Tar decanter	Tar dewatering	Tar refining	Light-oil storage	Primary cooler	Final cooler: Wash oil	Final cooler: Direct water	Final cooler: Tar bottom	Final cooler: Naphthalene	Light-oil decanter	BTX (intermediate light oil)	Benzene storage
30. Armco Steel, Middletown, OH	4,853	P	P	NP	P	P	NP	P	NP	P	P	NP	P
31. New Boston Coke, Portsmouth, OH	1,031	P	P	NP	P	P	NP	NP	P	NP	P	NP	NP
32. J&L Steel, Campbell, OH	2,982	P	P	NP	P	P	NP	P	NP	P	P	NP	NP
33. Koppers Co., Toledo, OH	430	P	P	NP	NP	P	NP	NP	P	NP	NP	NP	NP
34. Republic Steel, Cleveland, OH	4,806	P	P	NP	P	P	P	NP	NP	NP	P[b]	P	NP
35. Republic Steel, Massilon, OH	455	P	P	NP	P	P	NP	P	NP	P	P	NP	NP
36. Republic Steel, Warren, OH	2,584	P	P	NP	P	P	P	NP	NP	NP	P	NP	NP
37. Republic Steel, Youngstown, OH	2,395	P	P	NP	P	P	NP	P	NP	P	P	NP	P
38. U.S. Steel, Lorain, OH	3,645	P	P	NP	P	P	NP	P	NP	P	P	NP	NP
39. Bethlehem Steel, Bethlehem, PA	5,293	P	P	NP	P	P	NP	P	NP	P	P	P	NP
40. Bethlehem Steel, Johnstown, PA	1,044	P	P	P	P	P	NP	NP	P	NP	P	P	NP
41. J&L Steel, Aliquippa, PA	3,327	P	P	NP	P[b]	P	NP	NP	P	NP	P	NP	P[b]
42. Koppers Co., Erie, PA	567	P	P	NP	NP	P	NP	NP	NP	NP	NP	NP	NP
43. Philadelphia coke, Philadelphia, PA	798	P	P	NP	NP	P	NP	NP	NP	NP	NP	NP	NP
44. Shenango, Inc., Pittsburgh, PA	1,633	P	P	NP	P	P	NP	P	NP	P	P	NP	NP
45. U.S. Steel, Clairton, PA	12,673	P	NP	P	P	P	NP[a]	NP	NP	NP	P[b]	NP	P
46. U.S. Steel, Fairless Hills, PA	2,505	P	P	NP	P	P	NP	P	NP	P	P	NP	NP
47. Wheeling-Pittsburgh, Monessen, PA	1,339	P	P	NP	P	P	NP	NP	P	NP	P	NP	NP
48. Chattanooga Coke & Chemical Chattanooga, TN	355	P	P	NP	P	P	NP	P	NP	P	P	NP	NP
49. Lone Star Steel, Lone Star, TX	1,387	P	P	NP	P	P	NP	P	NP	NP	P	P	NP
50. U.S. Steel, Provo, UT	2,982	P	P	NP	P	P	NP	P	NP	P	P	NP	P
51. National Steel, Browns Island, WV	2,999	P	P	NP	P	P	P	NP	NP	NP	P	P	NP
52. National Steel, Weirton, WV	3,044	P	P	NP	P	P	NP	NP	P	NP	P	P	NP
53. Wheeling-Pittsburgh, E. Steubenville, WV	4,127	P	P	NP	P	P	P	NP	NP	NP	P	NP	NP
54. Milwaukee Solvay, Milwaukee, WI	534	P	P	NP	NP	P	NP	NP	NP	NP	NP	NP	NP
55. J&L Steel, Pittsburgh, PA	4,898	P	P	NP	P	P	NP	P	NP	P	P	NP	NP

P = The plant uses this process.
NP = The plant does not use this process.

[a]Indirect final cooler.

[b]Source is controlled.

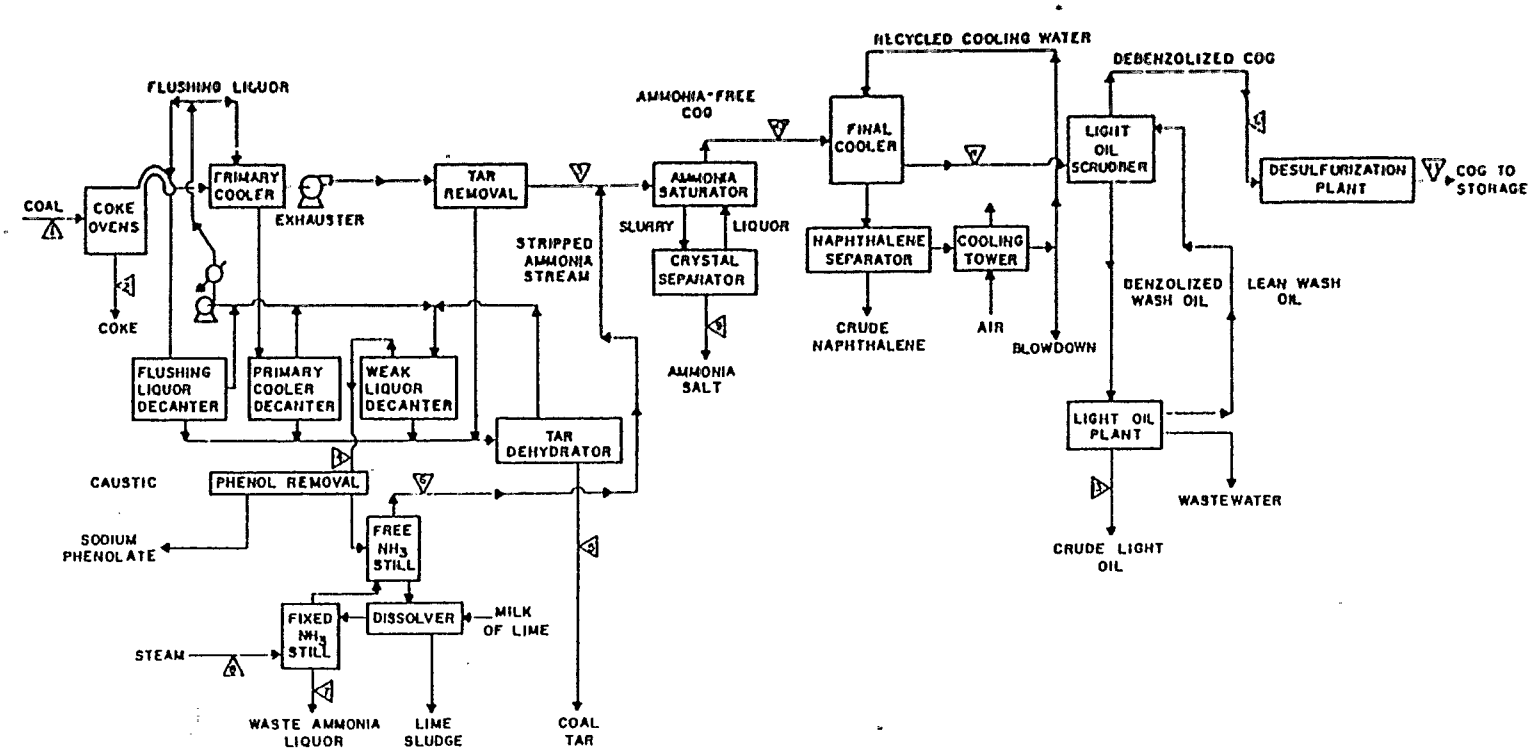

KG/DAY	1 COAL	2 COKE	3 RAW GAS	4 NH LIQUOR	5 TAR	6 STRIP	7 WASTE LIQUOR	8 STEAM	9 SALT	10 COG	11 COG	12 COG	13 CRUDE LO	14 COG
CARBON SOLIDS	10,000[a]	7370												
WATER	500		100	900	8	110	1040	250		240	140	130		130
CARBON DIOXIDE			89	1		1				90	90	85		80
HYDROGEN SULFIDE			29	1		1				30	30	30		2
AMMONIA NITROGEN			15	5		5			20					
CYANIDE			4	1		1	TRACE			5	3	3		
CHLORIDE				1			1							
GASES: H_2, CO, CH_4, N_2, O_2, HC			1500							1500	1500	1500		1500
CARBON DISULFIDE			2							2	2		2	
LIGHT OILS			90		8					90	90	5	85	5
TAR ACIDS				1	10		TRACE							
TAR BASES			2		10					2	2		2	
POLYCYCLICS			1		340					1				
OTHER							Cal 1		SO_4 53					
TOTALS	10,500	7370	1840	910	380	120	1040	250	73	1960	1860	1760	90	1720
TEMPERATURE °C			60	30	30	95	105	130		45	30	30		30
PRESSURE, bars			1.1			1.1		2.7		1.05	1.04	1.02		10

COG = coke oven gas.

NOTE: Blank spaces indicate that data are not available.

Figure 3-1. Flow plan and material balance of a representative coke by-product recovery plant.[9]

TABLE 3-4. FATE OF COKE OVEN BY-PRODUCTS

Component	Route
H_2, CH_4, light hydrocarbons, N_2, O_2, CO, and CO_2	Remain in gas; used as fuel gas.
Ammonia	Via gas to ammonia scrubber or via liquor to ammonia still; then back to gas and to the ammonia scrubber. Most ammonia converted to ammonium sulfate.
Water	Via liquor to ammonia still; remains as waste ammonia liquor.
H_2S, HCN	Via gas or liquor to free ammonia still and into gas to desulfurizer.
Benzene, toluene, xylene (BTX)	Via gas to light-oil scrubbers.
HCl	Via liquor to waste ammonia liquor as $CaCl_2$ (lime still).
Tar bases (such as C_5H_5N)	Condensed into tar or via gas to ammonia scrubber.
Tar acids (such as phenol)	Via liquor to dephenolizer or condensed as tar.
Naphthalenes	Condensed in tar or via gas and condensed in final cooler.
Heavy organics (boiling point >200° C)	Condensed as tar (small fraction to light oil).

recovery step. The liquor traditionally is steam-stripped with the addition of a caustic to return the ammonia to the gas stream for recovery. Ammonium sulfate crystals that result from an acid contact procedure are separated from the saturated liquor.

The exhauster is a fan that provides motive power for the gas. A collection device removes the remaining tar from the gas, generally as a particulate; both gas scrubbers and electrostatic precipitators are used as collection devices in the industry.

The final cooler is a pretreatment step for light-oil recovery. In the process, naphthalene is condensed from the gas and separated from the cooling water by absorption in tar or by flotation. Light oil is recovered by absorption in a petroleum fraction wash oil. The light oil is steam-stripped from the wash oil, and the wash oil is recirculated. Desulfurization, which removes hydrogen sulfide from the coke oven gas, is not in widespread use.

The following subsections further describe the individual processes. The reader should be aware that (1) today's by-product plants often have evolved over 20 to 50 years of maintenance, design, and operational changes; (2) the technology is mature, providing many options for coal chemical recovery; and (3) the market for coal chemicals is uncertain, and economic pressure has led to operational changes at the plants. This situation results in a substantial plant-to-plant process variability.

3.2.2 Tar Processing

3.2.2.1 Tar Decanter. Figure 3-2 outlines the tar separation operations. Tar condensation initially occurs by direct contact with flushing liquor in the collecting and suction mains. The gas mains are sprayed and vigorously flushed with recycled liquor to quench the gas and to avoid buildup of tar deposits. Approximately 80 percent of the tar is separated from the gas in the mains and is flushed to a tar decanter. Twenty percent of the tar is condensed and collected in a primary cooler along with a significant amount of water. Tar continues to be removed in the exhauster, which provides motive power for the gas, and a collector (often an electrostatic precipitator or gas scrubber) removes most of the residual, entrained tar particulate.

In a tar decanter, the tar is separated from the flushing liquor by gravity. Typical residence times are about 10 minutes for liquor and

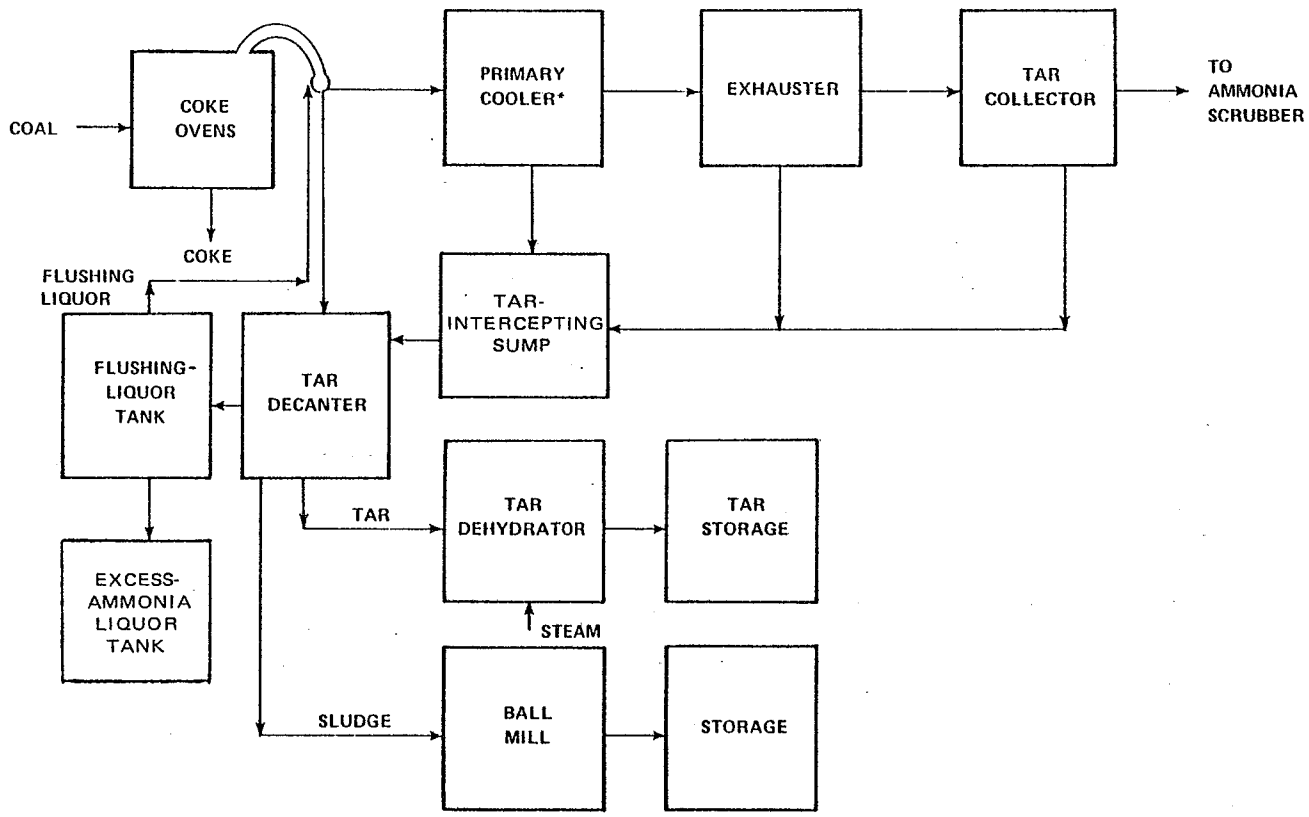

*THIS FLOW PLAN INCLUDES A DIRECT CONTACT PRIMARY COOLER. INDIRECT PRIMARY COOLERS UTILIZE NONCONTACT COOLING WATER AND A HEAT EXCHANGER.

Figure 3.2. Tar separation flow diagram.

40 hours for tar. The degree of separation achieved is highly variable because of coal type and operating differences between plants. Liquor from the decanters is recycled to the gas mains.

Tar decanters are often elongated, multicompartment, rectangular tanks that collect tar on the bottom of the tank and remove flushing liquor at the top. In addition to these two primary streams, sludge accumulates and may be collected by a drag conveyor from the bottom of the decanter. The temperature of the flushing liquor in the decanters is approximately 80° C. Decanter coal tar generally is stored in vented cylindrical tanks maintained at 70° to 90° C. Decanted flushing liquor also is stored in tanks that are vented to the atmosphere.

Multiple decanting stages may be used to reduce the tar's moisture content. These decanters, which may be covered, commonly are vented to the atmosphere. If the tanks are covered, they have hatches to allow access to the decanter interior. Industry's common target for water in coal tar is approximately 1 to 2 percent.[10]

The "heavy" tar that condenses in the mains when the raw coke oven gas is hit with flushing liquor tends to be richer in pitch and high-boiling compounds and collects the coal and coke fines entrained out of the ovens by the gas. In contrast, the "light" or "primary cooler" tar that condenses in the primary cooler tends to be cleaner, relatively lower boiling, less viscous, and less dense.

Depending on the plant scale and the design philosophy, these two streams of tar may be merged or separated. In the latter case, at least two kinds of decanters are required. One, often called the flushing-liquor decanter, separates the heavy tar and sludge from the flushing liquor, which is cooled and recirculated. A second, called the primary-cooler decanter or primary-cooler tar-intercepting sump, accepts the light tar and condensate. Some of the condensate is used as makeup to the flushing liquor and some is forwarded (perhaps through a third kind of decanter) to ammonia recovery or waste treatment.

"Tar decanter" means the decanter type that accepts either all the tar or only the heavy tar. The tar decanter may be equipped with a mechanical device to remove coal tar sludge, coal and coke fines, and adhering tar.

The tar and liquor that come to either decanter will have been in recent contact with raw coke oven gas at about the same temperature (60° to 80° C) and pressure (~1 atm) and will be saturated with the components of that gas. If separation from the gas were perfect, there would be no tar fog to be removed from the gas and no froth from the liquid. Separation is never perfect; therefore, any coke oven gas mechanically entrained with the descending tar and liquor will be delivered to the decanter at a slightly higher pressure and will build up in the decanter if it is not vented.

If the contents of the decanter are permitted to cool, some of the mechanically entrained gas will dissolve. However, no reasonable amount of cooling will dissolve all the gas, and hydrogen is especially difficult to dissolve. Therefore, the minimum venting rate is related to the design of the gas/liquid separator upstream; the venting rate will vary necessarily from plant to plant even when expressed per unit of production.

If the decanter is heated, perhaps in the belief that heating helps separate the tar from the liquor, some of the dissolved species will revert to the gas phase. Thus, heating augments the volume of emissions and alters their composition. For example, the total amount of benzene emitted will increase even though the concentration of benzene per unit volume of emissions may be reduced.

Tar decanter emissions are sensitive to two variables that are not narrowly limited: residence time in a gas-liquid separator, and optional heating. The rates recorded by VanOsdell[9] and those developed in this document should be viewed in light of this sensitivity.

Air emissions from a vented decanter depend on the composition and temperature of the flushing liquor, possible presence of a dispersed light-organic phase floating on top of the flushing liquor, size and location of the vents, interior design of the decanter, and wind effects. The emissions contain significant amounts of benzene and PAH's.[9]

The estimated rate of benzene emissions from a tar decanter at U.S. Steel, Fairfield, Alabama, was 15.6 g/Mg of coke.[9] The benzene emission rate measured at a tar decanter at a Pennsylvania steel plant was 1.2 kg/h (2.6 lb/h).[11] This decanter was one of two for a coke battery. Emissions from the two decanters are assumed to be twice the emissions from the single decanter, or 2.4 kg/h (5.2 lb/h). The corresponding benzene emission

factor for this decanter would be 84.7 g/Mg coke. One of three tar decanters was tested at a steel plant in Indiana,[12] where the average benzene emission rate was 4.4 kg/h (9.7 lb/h). The corresponding emissions for three decanters are 13.3 kg/h (29 lb/h), which yields a benzene emission factor of 69.6 g/Mg of coke at this decanter. The average benzene emission factor from these two decanters is 77.2 g/Mg of coke. The emission factor is designated as 77 g of benzene per megagram of coke to estimate emissions from tar decanters.

3.2.2.2 Ball Mill. The tar decanter collects sludge at a rate of approximately 600 g/Mg of coke produced.[13] Recent hazardous waste regulations will tend to discourage disposal of this tar decanter sludge. One method of recycling the sludge is to process it in a ball mill and recycle it to the coke ovens. A ball mill is a revolving mill that achieves size reduction through mechanical impact.

Emissions from the ball mill will depend on temperature and air flow from the ball mill. A ball mill was observed at the Bethlehem Steel plant at Bethlehem. The operating temperature was low enough so that benzene and benzo(a)pyrene (BaP) emissions measured during a pretest screening estimate were not considered significant.[14]

Emissions from a ball mill processing tar-decanter sludge apparently can be controlled if the ball mill is operated at a relatively low temperature, but excessive temperatures drive off benzene and tar components from the sludge. Emissions from the ball mill processing tar sludge are believed to be relatively small at current operating conditions, and the ball mill is therefore not considered to be a major source.

3.2.2.3 Flushing-Liquor Circulation Tanks. The water that separates from the tar in the tar decanters is transferred to the flushing-liquor circulation tanks, as illustrated in Figure 3-2. The cooled flushing liquor is used to reduce the temperature of the gas leaving the coke oven. Because water is driven off the coal during the coking process and most of this water is condensed into the flushing liquor, water must be removed from the circulating flushing-liquor. This excess flushing liquor is stored in the excess-ammonia liquor tank.

The emission factor for the flushing-liquor circulation tank (9 g/Mg of coke) and excess-ammonia liquor tank (9 g/Mg of coke) was obtained from

a test where the fugitive emissions from a primary-cooler condensate tank were measured.[9] This tank was assumed to be similar to a flushing-liquor circulation tank and contained liquids similar to those in the excess-ammonia liquor tank.

Ammonia liquor is produced at a rate of about 7 percent of the coal rate, or 100,000 g/Mg of coke. If the flushing liquor contained 600 ppm benzene, the maximum benzene emission rate would be 60 g/Mg of coke. The benzene emission rate at a particular plant from the storage of flushing liquor is thought to depend on the number of tanks, the number of vents, the geometry of the tank, and other factors.

3.2.2.4 Tar Dewatering. The tar-dewatering process reduces the water content of the tar more efficiently than does the decanting process. Depending on the plant, the tar-dewatering process may consist of additional storage time with or without chemical emulsion breakers, centrifugal separation, steam heating in tar dehydrators, or a combination of these methods. Centrifugal dewatering should not produce air emissions directly, although fugitive emissions are possible if any storage vessels are required for centrifugal dewatering.

In many existing plants, the coal tar is not refined onsite but is sold to tar refiners. As mentioned previously, a common specification is that this sold tar should contain no more than 2 percent water; however, much more than this amount of water usually is mixed into the tar underflow from the tar decanter. Accordingly, plants dewater the crude coal tar usually by heating it in tar dehydrators to reduce its viscosity and providing residence time for water droplets to coalesce and rise to the surface of the denser tar. Ordinarily, the temperature is maintained above 90° C, and the combined vapor pressures of hydrocarbons over the tar phase and water over the aqueous phase can exceed 1 atm. The result is a plume of steam and hydrocarbons from the vent if the tank is vented to the atmosphere.

Some of the by-product plants dewater tar by heating it with steam coils to a temperature beyond the boiling point of water.[15] The benzene emissions could depend on the quantity of water vapor or steam driven off during the dewatering process.

Emissions from tar dewatering were evaluated at three by-product plants.[12 16 17] The emissions data for tar dewatering at the Fairless Hills Works (Appendix C) showed higher emissions from the West tank (3.2 kg/h) than from the East tank (1.1 kg/h). These tanks are operated in series rather than in parallel, and the wet tar enters the West tar dehydrator first. Consequently, the emissions from the West tar dehydrator are expected to be higher than emissions from the East tar dehydrator. The daily benzene emission rates from the two tar-dewatering tanks at this first plant were 27 and 76 kg, respectively. Daily benzene emissions from tar dewatering at the second plant were 43 kg. The tar is dewatered in storage at the third plant, where benzene emissions were 24 kg/day. The benzene emission factors from these three plants were 41, 9.5, and 12.9 g/Mg of coke, respectively. These were averaged to obtain a benzene emission factor for tar dewatering of 21 g/Mg of coke.

The tar-dewatering tanks contained tar with 200 to 2,000 ppm benzene in the liquid. Tar, as collected from the flushing liquor and the primary cooler, can contain greater than 0.2 percent benzene or 2,000 ppm at a rate of 40 kg/Mg of coke produced. The maximum potential for benzene loss from tar dewatering and storage calculated from these values is greater than 80 g/Mg of coke. The benzene emissions from tar dewatering and storage probably will be less than 80 g/Mg of coke and will depend on the method of operating these processes.

3.2.2.5 Tar Refining. Emissions from tar refining are essentially fugitive vapor emissions from vented tanks. Tar-refining plants are relatively unique because each plant has been built and operated to meet specific market conditions. The basic operations are shown in Figure 3-3. Emissions from a product storage tank were estimated as 0.008 g of benzene per megagram of coke and 0.015 g of nonbenzene aromatic hydrocarbons per megagram of coke, based on measured concentrations and estimated working losses.[9] Benzene emissions from these sources are therefore believed to be relatively little, and tar-refining emissions are not considered a major source when compared to others in the by-product plant.

3.2.2.6 Pitch Prilling. The tar recovered in a by-product plant can be refined by distillation, which separates the tar components into various fractions according to the relative vapor pressures. The high-boiling

fraction, which includes some BaP, is called pitch and can be formed into prills or pellets by prilling.

Approximately 2 million Mg of coal tar pitch are produced annually in the United States. The pitch is used in the production of carbon electrodes and synthetic graphite, for roofing and paving, and as a binder for composites such as foundry cones and refractory bricks.

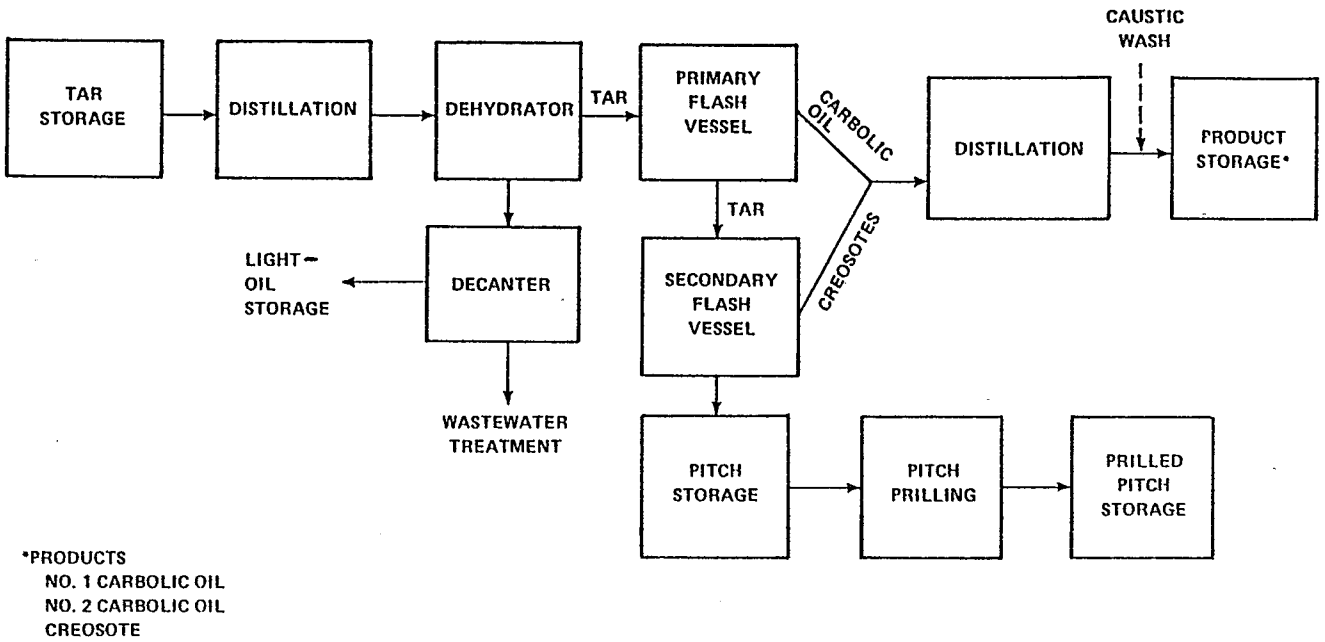

Figure 3-3. Tar-refining flow diagram.

The pitch may be shipped in molten form in tank cars, as cast packages of convenient size, as lumps after it solidifies, or as extruded pencils or beads. The latter are known as "prills" and, at one of the very few plants performing this operation,[18] they are glassy spheroids of perhaps 1 mm (1/16 in.) diameter.

At this plant, the pitch is preheated, filtered, and pumped to a head tank where it is maintained at a controlled temperature and depth. From the head tank it drains by gravity through a steel plate perforated so the individual streams break up into droplets. These droplets, falling into a stream of recirculated water, are rapidly quenched and rarely agglomerate. The temperature in the head tank is crucial to proper priller operation.

In times of reduced demand, the priller must be shut down. Restarting is a nuisance and may constitute an exceptional pollutant source if live steam must be used to thaw pitch residues.

At the plant discussed above, the hot pitch tank head space is vented to avoid the buildup of explosive concentrations of hydrocarbons in air. The venting may be passive (i.e., a fan or steam ejector is not used) and still at some risk of explosion, or active. If the venting is active, air is pulled into the head space at various vents or at the edges of the lid, and a stream of air and hydrocarbons is exhausted. A steam or air ejector is preferable to a fan because of tar condensation in the vent lines.

The emissions from a pitch prilling operation were measured at a large tar refinery.[19] The flow rate of BaP was 0.00035 g/Mg of coke, considerably less than BaP emissions from coke batteries at a large plant--approximately 0.11 g/Mg of coke.[20]

3.2.2.7 Tar and Tar Product Storage. Tar and tar products are stored in tanks in coke oven by-product plants. The primary cooler tar and the flushing-liquor tar contain benzene, which can evaporate into the air over the surface of the fluid inside the tank. Some of the tar products contain the light components of the tar, which also contains benzene. Each of the tar and tar products storage tanks can contain BaP and other PAH's. If the tank is heated, the PAH vapor pressures may be significant.

The vapors from the surface of the liquid enter the head space of the tank, where they can be emitted into the atmosphere by air displacement

when the tank is filled. A lesser emission is contributed from tank "breathing" (volume displacement caused by temperature changes). Emissions from storage tanks are influenced to some extent by the tank design, which can influence the amount of benzene and PAH's in the tank head. Storage tank design for emission control is discussed in Subsection 4.1.11.

Benzene emissions from tar storage were measured at a smaller plant[21] as 5.4 kg/day. Another plant[17] had benzene emissions of 24 kg/day from tar storage, but the second plant practiced tar dewatering in the heated tar storage area. The emissions factors from these two plants were 11 and 12.9 g of benzene per megagram of coke, respectively. The benzene emission factor for estimating emissions from tar storage, 12 g/Mg of coke, is obtained when the two emission factors are averaged. Uncontrolled emissions of BaP (before control with a venturi scrubber) were measured as 6.8 g/day from pitch storage at a large plant.[19]

3.2.3 Ammonia Wastewater Processing

This subsection describes the processes used to recover ammonia and phenols from wastewater. No significant benzene emission sources have been identified in ammonia recovery from wastewater.

The ammonia produced in a coke oven is approximately 0.2 percent of the weight of the coal fed to the ovens. Flushing liquor sprayed into the collecting mains to cool the gas absorbs some of the ammonia, and more ammonia is absorbed in the water condensed in the primary cooler (see Figure 3-1). Flushing liquor contains around 5 to 6 g of ammonia per liter. Along with ammonia, compounds such as hydrogen sulfide, phenolic compounds (tar acids), and cyanides dissolve in the flushing liquor. The distribution of ammonia between the gas and liquid phases depends on operating conditions and coal composition. Figure 3-1 assumes a phase split where 75 percent of the ammonia remains in the gas phase.

Several processing options have been developed to recover the ammonia. The ammonia-handling route shown in Figure 3-1 is known as the semidirect process and is the option commonly used in the United States. All of the ammonia eventually is recovered from the gas stream, but a portion enters the flushing liquor first and is later stripped out.

For the semidirect process, three alternatives are used for the liquor: no treatment, free-still ammonia stripping, and free- and fixed-still ammonia stripping. Based on a recent Environmental Protection Agency (EPA) survey of the by-product coking industry, all three alternatives are used.[22] Out of 52 plants surveyed, 33 plants (53 percent) used or were planning to use free and fixed stills; 4 plants (8 percent) used only free stills; and the remainder did not attempt to recover ammonia from excess-ammonia liquor.

3.2.3.1 Ammonia Liquor Treatment. Aqueous ammonia solutions are decanted from the tar in a variety of processing vessels. Much of this solution is recycled as flushing liquor, and a portion is constantly drawn off to additional decanters as excess-ammonia liquor. The ammonia in the excess-ammonia liquor must be put into the gas phase for recovery via the acid contactor. The traditional removal technique is steam stripping as shown in Figure 3-4.

Ammonia removal from the coke oven gas traditionally has been by contact with sulfuric acid and recovery of crystalline ammonium sulfate. The Phosam® process involves the absorption of ammonia in circulating aqueous ammonium hydrogen phosphate (monobasic) solution, the stripping of ammonia from this medium, and the condensation of the concentrated ammonia.[23] Distillation of the product, either cryogenically or under pressure, yields a substantially pure ammonia that is more readily marketable than are the salts.

3.2.4 Tar Acid (Phenol) Processing

Phenol removal is practiced as a part of wastewater treatment and is not believed to be a significant benzene source. The term phenol is often used to refer to all the tar acids in the excess-ammonia liquor stream. However, tar acids consist of approximately 60 to 80 percent phenol, and the remainder is mostly cresol with small amounts of some higher phenolic homologs.[24 25] Phenol is a minor constituent of coke oven gas, whose concentration varies according to coking practice and coal composition. During 20 years of operation, one operator has reported phenol concentrations in the excess-ammonia liquor between 500 and 4,500 ppm and coking times of 13 and 22 hours.[26] Waste ammonia liquor phenol concentrations of 1,000 to 2,000 ppm are cited commonly as design values.

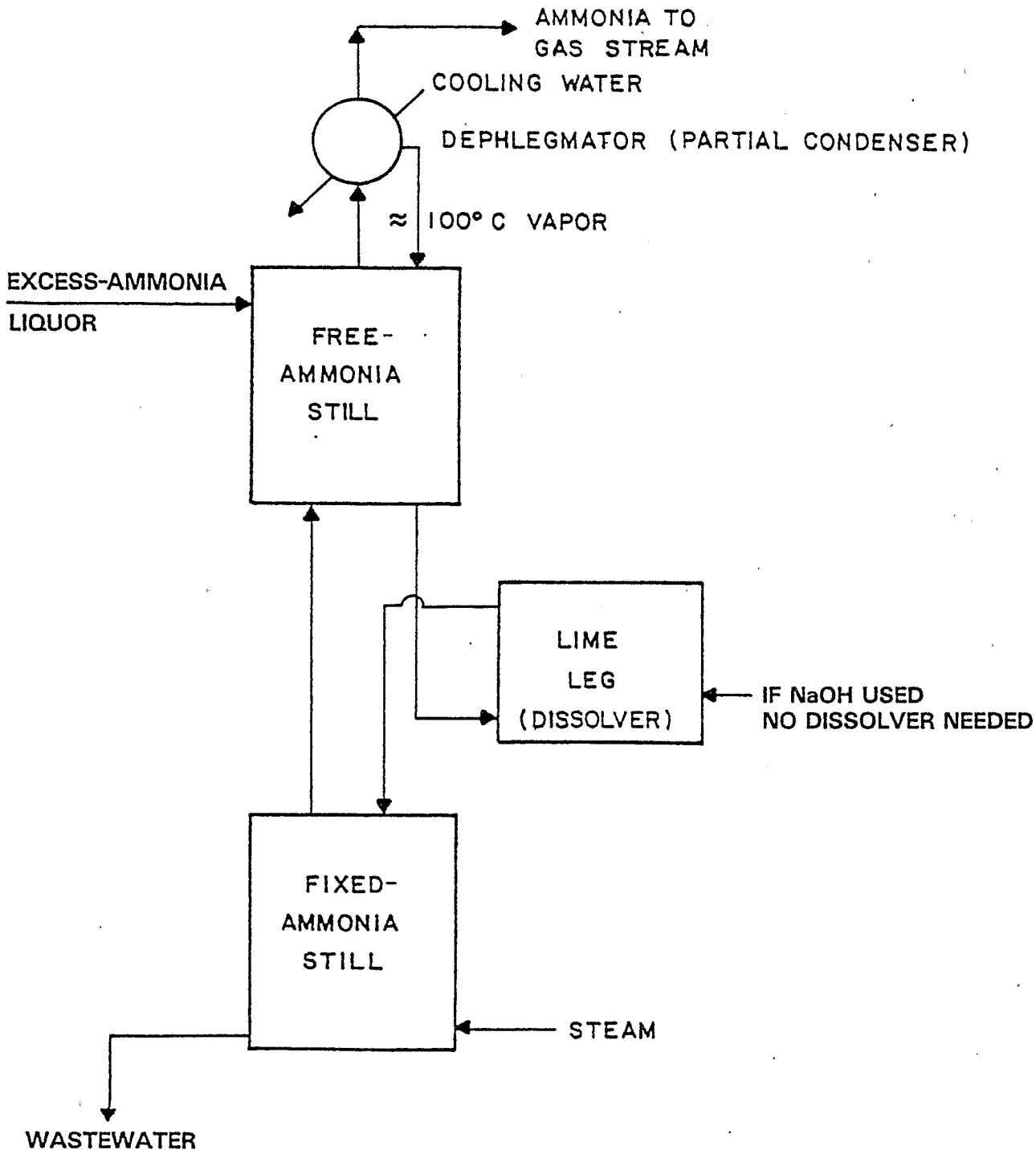

Figure 3-4. Ammonia stills.[9]

Several phenol removal/recovery techniques are practiced. The traditional process techniques are solvent extraction and steam stripping. In both cases, the phenol-rich stream, once extracted, is treated with caustic to make sodium phenolate.

The solvent extraction dephenolization process generally uses light oil or benzene to extract phenol from the excess-ammonia liquor. A flow diagram of a solvent extraction dephenolization process is shown in Figure 3-5. The excess-ammonia liquor flows through an absorber column, which may be a packed tower, a tray tower, a mechanically agitated column, or a series of mixer-settlers. The solvent rate is generally 1.2 volumes of solvent per volume of excess-ammonia liquor, although wide variations occur.

Dephenolization generates wastewater after the tar acids are removed from the sodium salts and springing gas. The wastewater will be saturated with light oil, and the springing of the phenols with high carbon dioxide gas will tend to strip benzene from the water. These emissions are not considered to be significant nationally with respect to other by-product benzene sources because only a few plants are known to remove phenols with light-oil extraction and the solubility of benzene in the water is expected to be low.

3.2.5 Final Cooler and Naphthalene Recovery

The basic function of the final cooler is to reduce the temperature of the coke oven gas from approximately 60° C to approximately 25° C to improve light-oil absorption in the light-oil scrubber. As the gas is cooled, some water and most of the naphthalene in the coke oven gas are condensed into the cooling medium. Both must be removed from the gas to prevent problems downstream.

Three forms of final coolers and naphthalene recovery technologies are used in the domestic by-product industry. These forms of recovery are: direct cooling with water--naphthalene recovery by physical separation; direct cooling with water--naphthalene recovery in the tar bottom of the final cooler; and direct cooling with wash oil--naphthalene recovery in the wash oil. Of the 55 plants listed in Table 3-3, 23 use direct-water final coolers, 18 use tar-bottom final coolers, and 5 use a wash-oil final cooler.

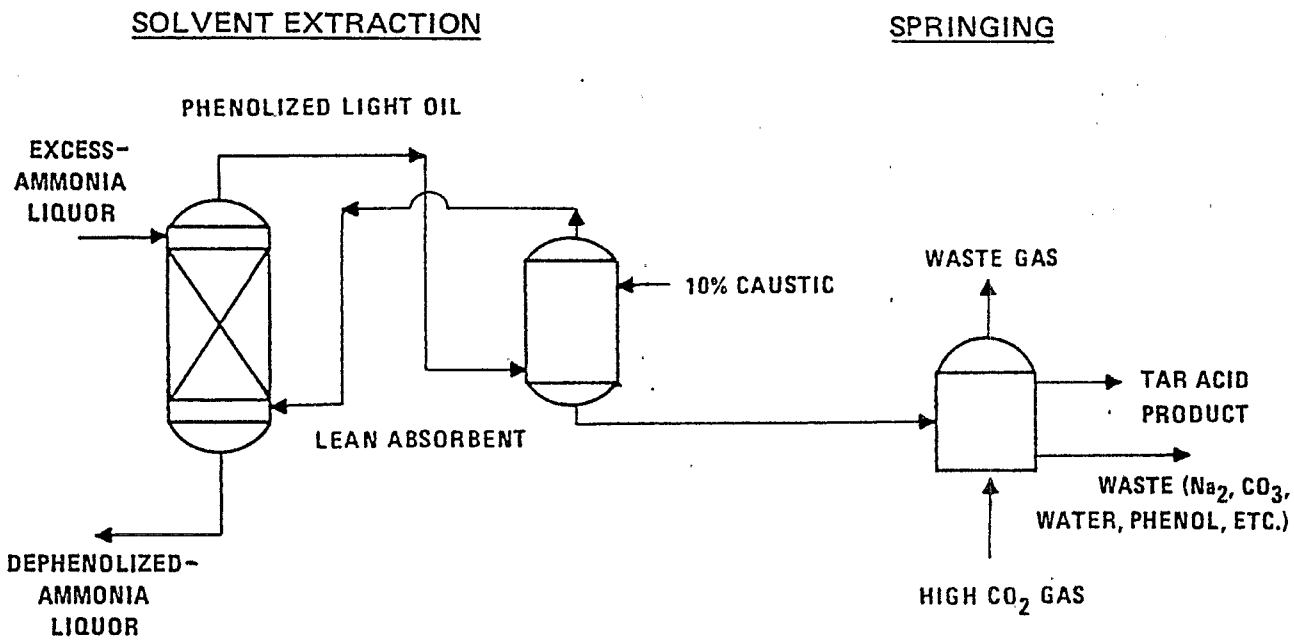

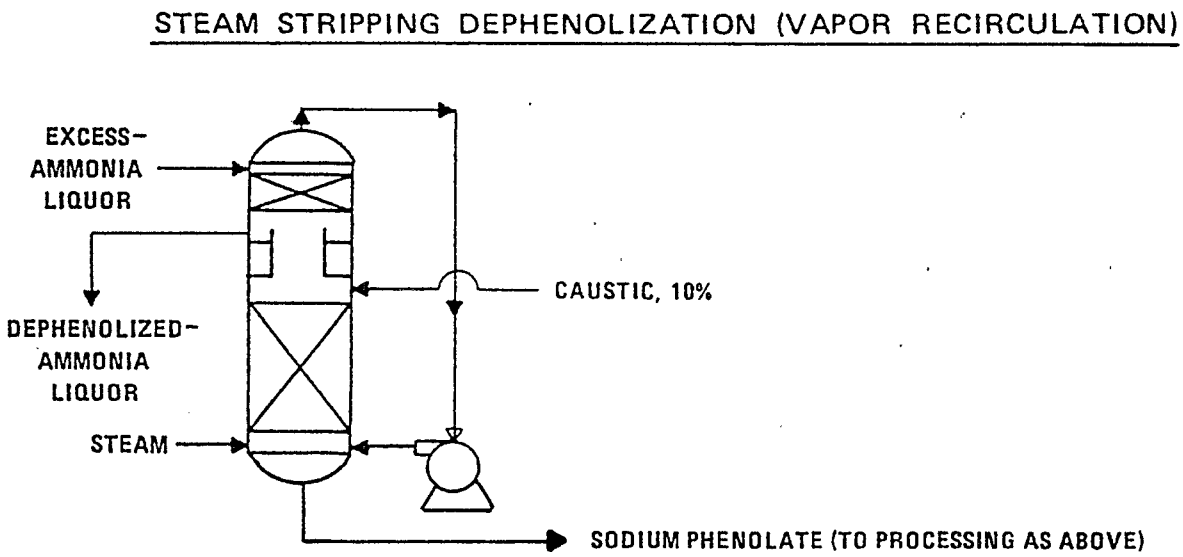

Figure 3-5. Solvent extraction and steam-stripping dephenolization processes.[9]

The circulating water absorbs hydrogen cyanide and benzene from the coke oven gas and liberates them to the atmosphere if, as in many plants, the same water is cooled against air in an open tower. An indirect cooler; i.e., a large shell-and-tube exchanger for the coke oven gas, prevents cooling tower emissions. The wash oil used to cool the coke oven gas in a wash-oil final cooler is cooled indirectly in a heat exchanger. This cooling eliminates naphthalene fouling of the heat exchanger surface, which would occur if hot water from a direct-water final cooler were cooled in the heat exchanger. Naphthalene is soluble in wash oil.

In plants that use a direct-water final cooler, cooling the coke oven gas causes condensation of naphthalene crystals and small amounts of liquid hydrocarbons. This condensation occurs because at that point the system pressure is higher[9] and the temperature is often lower than in other parts of the process. Crude naphthalene that condenses in the final cooler must be removed periodically or it will clog tubes, vents, and meters. Removing and processing the naphthalene for sale leads to benzene emissions, as discussed in Subsection 3.2.5.5.

An alternative method is to introduce tar into the final cooler. Several plants have tar-bottom final coolers in which the water, after it has cooled the coke oven gas and entrained the condensed hydrocarbons, is forced through a pool of tar. The tar removes most of the naphthalene from the water and is recirculated to tar storage tanks.[9] In another variation of a tar-bottom final cooler, the water contacts tar in an external device consisting of one or more mixing zones and as many settling zones, and light tar can be sprayed into a lower section of the final cooler if a decanter is provided to separate water and tar.[18]

These methods for dissolving the naphthalene in a hydrocarbon liquid eliminate naphthalene processing and the benzene emission from that step. However, these methods do not eliminate benzene from the final-cooler cooling tower. If light tar from the primary cooler decanter is used because the heavy tar is too viscous and has suspended solids, the light tar already contains significant quantities of benzene. Water brought near equilibrium with coke oven gas at about 45° C cannot be expected to give up much benzene to a tar that was in equilibrium with the same gas at about 35° C and a slightly lower pressure. If the tar is supplied intermittently

or only at a rate required to keep the naphthalene from clogging, the tar will shortly come to equilibrium with the water and accept no more benzene.

3.2.5.1 Direct-Water Final Cooler--Physical Separation of Naphthalene. Figure 3-6 is a flow diagram of a final cooler and recirculating water system with naphthalene collection by physical separation. After contacting the coke oven gas in the final cooler, the water is pumped through a sealed outlet to a separation device. Naphthalene, entrained tar, and vapor-phase gums condense in the separation device by gravity in a sump operation or flotation unit. The emissions from naphthalene separation are discussed in Subsections 3.2.5.4 and 3.2.5.5.

After separation of the naphthalene, the water is cooled in an atmospheric cooling tower and recirculated to the final cooler. The water contains soluble compounds such as chlorides and cyanides from the cooling operation, as well as benzene and other hydrocarbons from the coke oven gas. The individual draft water cooling tower transfers heat from the water to the air by atmospheric water-spray cooling. Water cooling is affected by the air circulation in the tower and ambient temperature. A blowdown stream may be bled from the recirculation water to prevent buildup of nonevaporated water, chloride, and cyanide.

The final cooler may be designed as a once-through water flow unit. However, recirculation is preferred because of resource conservation and water pollution constraints.

3.2.5.2 Tar-Bottom Final Cooler--Naphthalene Recovery in Tar. Another common way of handling the final-cooler water is to pass the water through tar in the bottom of the final cooler and allow the naphthalene to dissolve in the tar. The naphthalene is then included with the tar in any additional refining operations.

Figure 3-7 is a flow diagram of a tar-bottom final cooler. Sufficient water must exist above the tar bottom to force the water through the distributer and into the tar. The water then separates by gravity and is recirculated. The tar can be recirculated continuously to the tar storage tanks and may be sold as a final product or refined. The final-cooler water is cooled in a cooling tower and recirculated to the final cooler. A blowdown operation may be used.

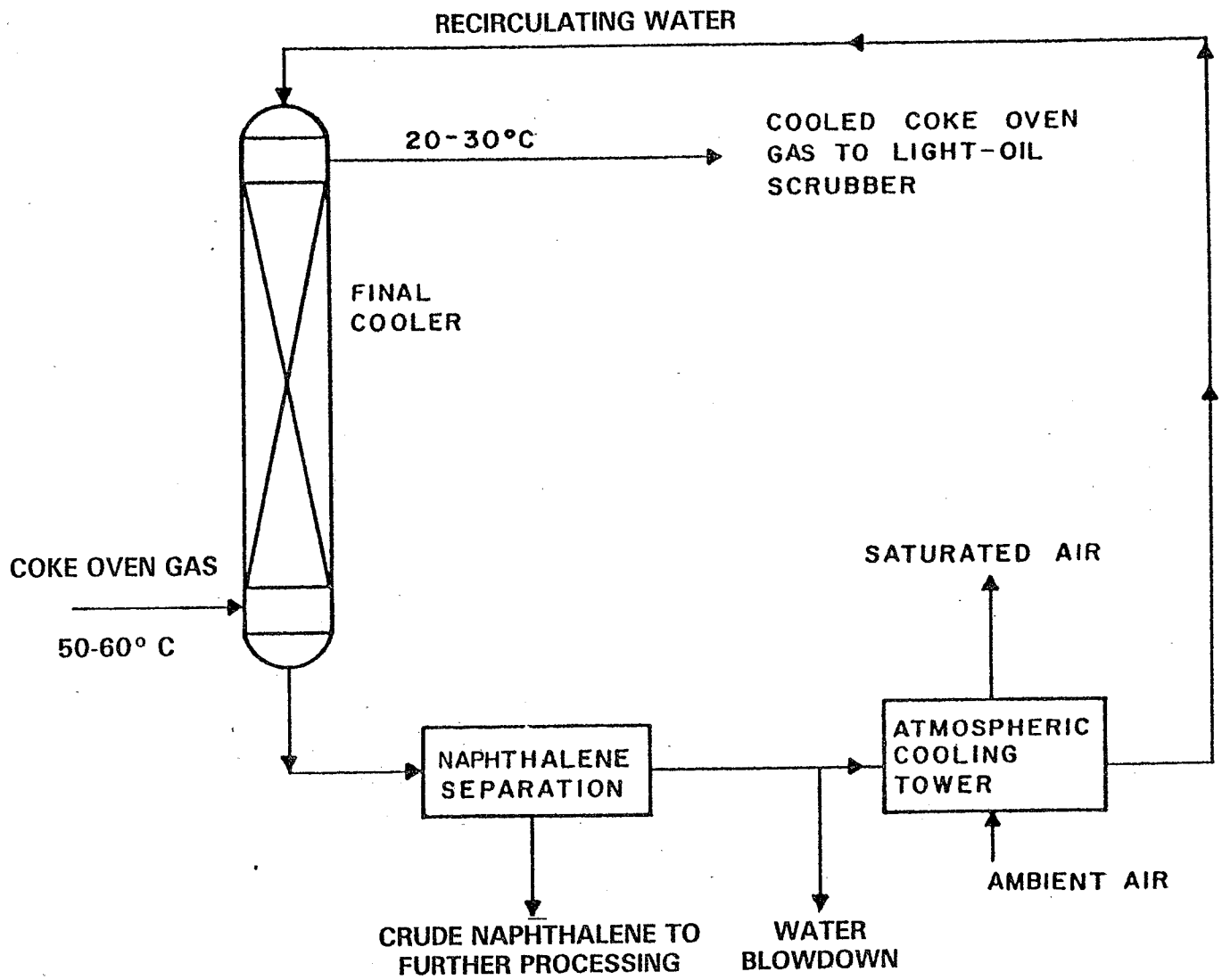

Figure 3-6. Direct-water final cooler — physical separation of naphthalene.

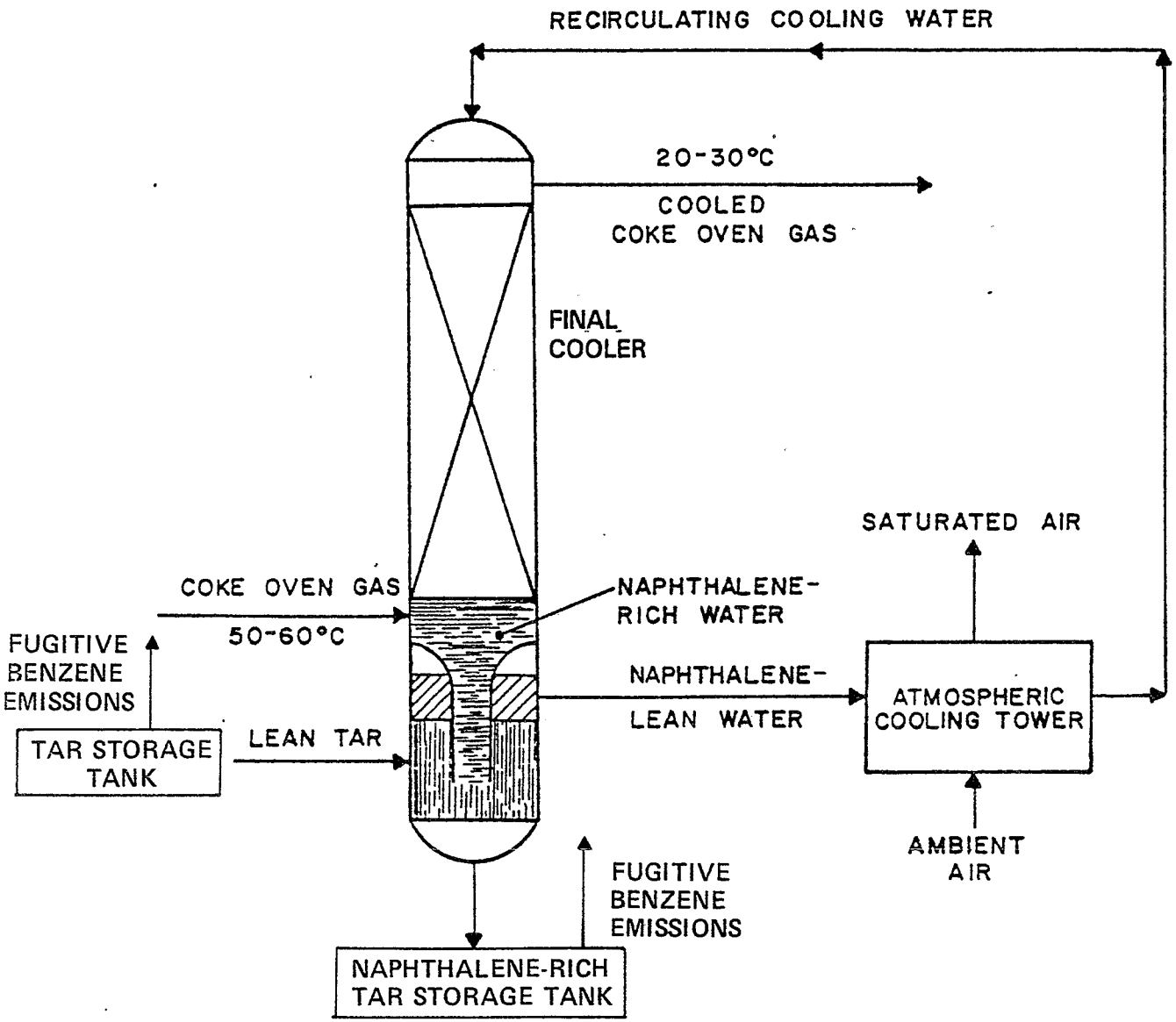

Figure 3-7. Tar-bottom final cooler—naphthalene recovery in tar.[9]

In the tar-bottom final cooler, the water that descends from the zone of contact with the coke oven gas carries the solid and liquid hydrocarbons that were condensed out of the gas. The condensed hydrocarbons are collected by the tar and the water that disengages from the tar is essentially free of entrained naphthalene, although some naphthalene is dissolved (solubility 0.003 g/100 g of water at 25° C). If the tar is furnished batchwise to the tar-bottom cooler, it eventually becomes saturated with naphthalene as evidenced by a "silvery" irridescence or light scattering by the crystals. Tar in this condition cannot remove suspended naphthalene, crystals from the cooling water and may become difficult to transfer. Consequently, the operator usually changes the tar batch when it appears (visually) to be saturated with naphthalene. Estimates based on the vapor pressures of solid and liquid naphthalene suggest that the tar becomes saturated with naphthalene when the concentration is about 30 mole percent or roughly 15 percent by weight, about twice the usual percentage.

The tar-bottom cooler method not only eliminates naphthalene handling and attendant benzene emissions but also has implications for benzene emissions from the final cooler. In this design, the water that picked up benzene when it cooled the gas and went to the atmospheric cooling tower may lose some of its benzene to the tar. The amount of benzene the water loses depends on the source of the tar and the tar-to-water ratio. The primary or heavy tar that is condensed in the gas mains by quenching at about 80° C contains very little benzene, perhaps 0.1 percent by weight. If all of this tar (about 40 kg/Mg of coke) contacted all of the cooling water (about 4,200 kg/Mg), which contains benzene in equilibrium with coke oven gas, some of the benzene would separate into the tar.

However, there are operating debits. The heavy tar is viscous and is normally stored and handled while it is warm; therefore, cooling it to 35° C in this contact may be inadvisable. Using the smaller amount of light tar, which is richer in benzene, might solve the naphthalene problem but probably would not affect the benzene concentration. Using the whole tar is an intermediate case. In any event, achieving close contact between a viscous tar and an aqueous slurry of naphthalene crystals may invite emulsification, clogging of nozzles, or both. This process seems to work

as a naphthalene-handling method but probably should not be expected to reduce benzene emissions from the final-cooler cooling tower significantly.

3.2.5.3 Wash-Oil Final Cooler--Naphthalene Recovery in Wash Oil.

Traditionally, water has been used to cool gases in the final cooler, but wash oil also can be used. The petroleum wash oil normally used for the cooling medium has a boiling range of 270° to 350° C, a specific gravity of 0.830, and a flash point of 150° C.[27] Naphthalene and some light oil will dissolve in the wash oil, and the water that condenses must be removed in a decanter. The wash oil normally is cooled by indirect heat exchange and recirculated to the final cooler. A slipstream of the wash oil containing naphthalene is routed to the light-oil recovery plant for removal of both the naphthalene and light oil. A lean wash-oil makeup stream is provided to the final-cooler recirculation tank. Figure 3-8 is a process flow diagram of the wash-oil final cooler.

In principle, benzene emissions from naphthalene handling and from the direct final cooler can be eliminated by the wash-oil final cooler. Because the oil's heat capacity is about half that of water, the circulation rate must be approximately doubled to maintain the same temperature pattern found in direct-water final coolers. If the column is the spray type, more pump work per pound of coolant is required to break the oil into droplets of a suitable size distribution.[28] If a packed or baffled column is chosen, the more viscous oil runs through the column more slowly, and allowance must be made for the increased quantity of oil in the column. Because the wash oil removes heat from the gas, it must be cooled by cooling water (the normal process) or possibly ambient air for much of the year.

Cooling the gas to any temperature above its dew point would not be a problem. However, the purpose of this unit is to cool and dehumidify the gas; the cooling required for moisture condensation is the greater part, perhaps 80 percent, of the unit's capacity. In a direct-water-cooled column, the heavy hydrocarbons remaining in the gas, naphthalene especially, also tend to condense. These hydrocarbons, partly solid because naphthalene melts at 80° C and crystallizes from the condensate at lower temperatures, form on or in the water and create a slight separation problem.

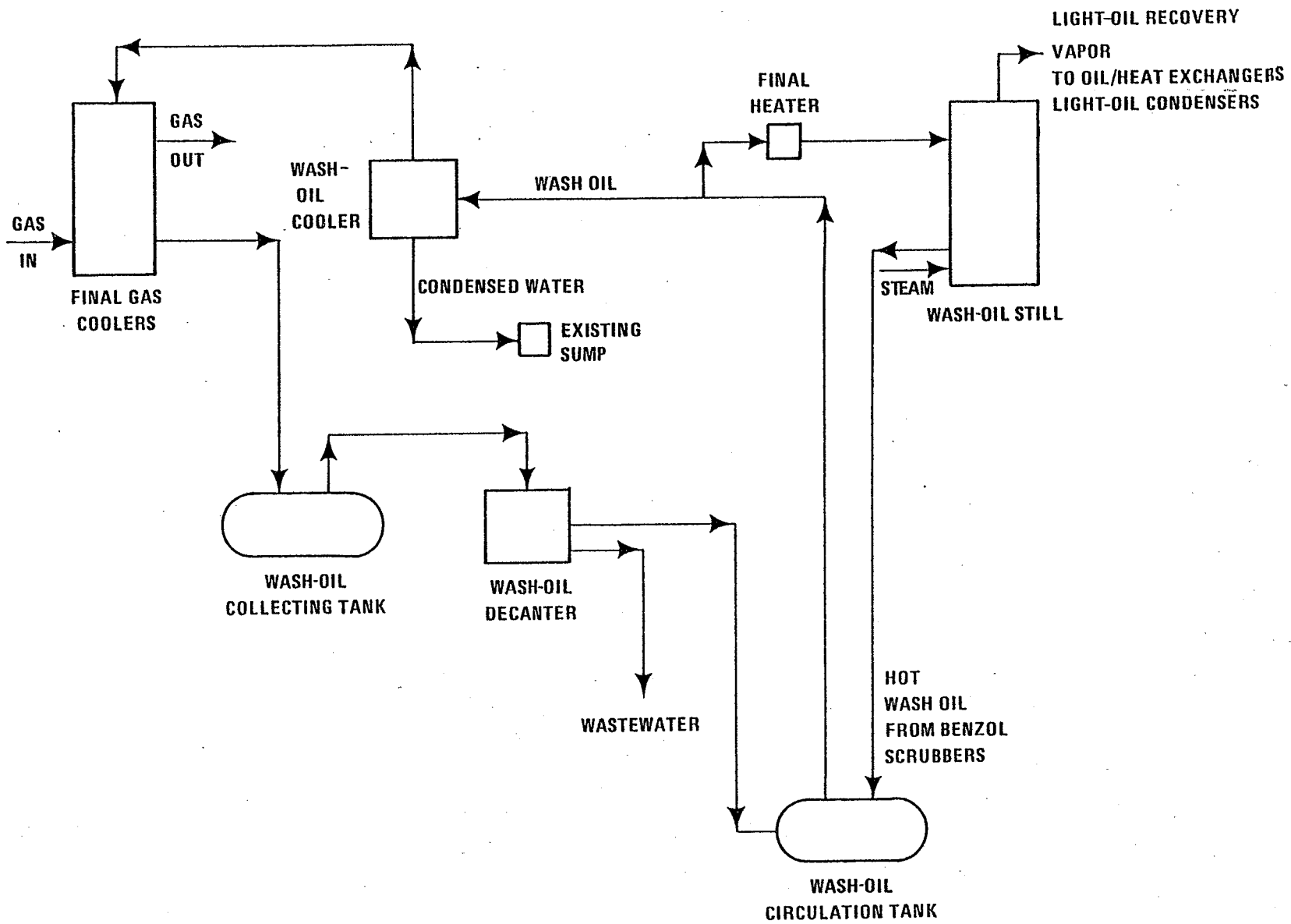

Figure 3-8. Wash-oil final-cooler recovery system.

Similarly, in a wash-oil final cooler, the condensing water will form small droplets on or in the oil. The problem is analogous to that of the hydrocarbon and naphthalene but is often more difficult to solve. In both cases, the dispersed phases are substantially less than is the continuous phase. In the wash-oil final cooler, separation is hindered by the viscosity of the oil and possibly other factors.

3.2.5.4 Naphthalene Processing. Naphthalene collected by physical separation is impure, has a dirty yellow-brown appearance, and contains a high percentage of water (approximately 50 to 60 percent). The naphthalene slurry is commonly dewatered by gravity separation. Crystallized naphthalene may be refined through drying when the crystals are melted in a rectangular tank equipped with coils for either cold water or steam circulation. After 24 hours in the vessel, an upgraded naphthalene with a greater than 78° C crystallization point is generated.[29] The crude naphthalene also may be dissolved in coal tar after physical separation and sold as a commercial feedstock.

With a direct-water final cooler, crude naphthalene is recovered from the hot well of the direct final cooler. The naphthalene crystals are wet with a film of mixed hydrocarbons, often of a brownish color, which suggests that some tar fog bleeds through the electrostatic precipitator and the ammonia saturator. This unpredictable amount of liquid hydrocarbon medium is a solvent for benzene. At these conditions, a liquid hydrocarbon would contain about 3 moles of benzene per 100 moles of liquid, perhaps 6 percent by weight. The naphthalene made at this step might be 1 kg/Mg; the liquid hydrocarbon would not be more than 2 kg/Mg to prevent the naphthalene from dissolving and is probably less than 0.5 kg/Mg. Thus, the dissolved benzene might be as much as 30 g/Mg, much of which would be evaporated during naphthalene handling and processing. For example, the naphthalene is conveyed some distance in open troughs, heated and dissolved in the accompanying hydrocarbon to disengage water, and stored while it is hot for convenient handling.

Crude naphthalene has little market value; therefore, approximately one-third of all plants (see Table 3-3) eliminate the nuisance by some variant of the tar-bottom cooler. However, about 40 percent of the plants handle naphthalene in some manner. Because more naphthalene is in the tar

than is recovered at the final cooler and some of this naphthalene can be recovered during tar refining, the tar-bottom final cooler does not eliminate the production and sale of naphthalene.

3.2.5.5 Emissions from the Final Cooler and Naphthalene Processing Units. Whether the tower is a direct-water once through, direct-water recycle, direct water with a tar bottom, or wash-oil operation, the final-cooler unit does not generate air emissions because it is a closed system. However, air emissions may be emitted from the induced-draft cooling tower used in conjunction with the direct-water and tar-bottom final coolers. In this unit, light components such as benzene and cyanide contained in the recirculating water will be stripped out.

Air emissions from a direct-water final cooler cooling tower were evaluated at three by-product plants.[9 11 16] The air stream directly above the cooling tower at the first plant contained 51.6 g of benzene per megagram of coke produced based upon a measured concentration and an assumed gas flow rate.[9] An analysis of the cooling tower blowdown showed it also contained 22 to 43 g of cyanide and 10 to 16 g of phenol per megagram of coke produced.[9] Cyanide was emitted into the atmosphere from this cooling tower at a rate of 280 g/Mg of coke. Benzene emissions were measured from the direct-water final-cooler cooling tower from a second large by-product plant at a rate of 800 kg/day, or 292 Mg/ yr.[11] This rate corresponds to a benzene emission factor of 230 g/Mg of coke. The third plant emitted benzene at a rate of 764 kg/day, or 280 Mg/ yr.[16] This benzene emission factor is 300 g/Mg of coke, based upon capacity. Another benzene emission factor from a direct-water final-cooler cooling tower was estimated as 69 g of benzene per megagram of coke produced, based on emission data provided by a large steel company.[30] This emission factor is not inconsistent with the measured benzene emissions, although the emissions are expected to vary to some extent from plant to plant as well as with time at the same plant. The benzene emission factor from cooling towers for direct-water final coolers is 270 g/Mg of coke, the average of the two emission factors identified from actual measurements of benzene concentrations and volumetric gas flow rates.

The emissions from a cooling tower for a tar-bottom final cooler were measured at another by-product plant.[17] The rate of benzene emissions was 130 kg/day, or 47 Mg/yr. The benzene emission factor, based on an assumed capacity, was 70 g/Mg of coke. Even considering the relative size of the plants, emissions from the cooling tower were less than those from the direct-water final-cooler cooling tower.

The wash oil is cooled indirectly with heat exchangers; therefore, benzene emissions are not anticipated from the cooling tower of a wash-oil final cooler; however, a wash-oil decanter and circulation tank are associated with a wash-oil final cooler. These are potential sources of benzene emissions similar to a wash-oil decanter and circulation tank used with a wash-oil scrubber; therefore, potentially significant benzene emissions are likely if these sources are not controlled. The benzene emissions from a wash-oil decanter used for light-oil recovery were measured at a by-product plant at a rate of 9.5 kg/ day, 3.8 g/Mg of coke, or 3 Mg/yr.[16]

Emissions are generated from the majority of the naphthalene separation, handling, and processing operations. Naphthalene separation, when conducted in open air dip tanks or vented storage tanks, is a potential emission source of benzene, naphthalene, and other aromatic hydrocarbons. These emissions increase when the crude naphthalene is refined by drying with steam and/or melting.

Air emissions from a flotation separation and naphthalene-refining tank have been assessed. The separator was approximately 8 m (25 ft) long, 3 m (10 ft) wide, and 3 m (10 ft) deep. The refining tank was lined with steam coils and had a 5-m vent stack. Despite no measurable emission flow rate from the separation tank, a vapor emitted from the vent was found to consist primarily of benzene, benzene homologs, aromatic hydrocarbons, fused polycyclic hydrocarbons, and fused nonalternant polycyclic hydrocarbons. The naphthalene emission rate from the refining tank was estimated at 1.56 kg/Mg of coke produced. The benzene emission rate was not estimated.[9]

Naphthalene is separated in a Denver flotation unit and processed in a naphthalene drying tank and melt pit at a by-product plant in Pennsylvania.[11] The benzene emission rate from the Denver flotation unit was 300 kg/day, or 110 Mg/yr. Benzene emissions from the naphthalene melt pit were as great as 216 kg/day, and the emission benzene rates from the two tests at the

drying tank were 17 kg/day and 0.44 kg/day. The slurry recovered from the Denver separation is transferred to the melt pit with an initial emission rate of 1.5 to 3 kg/h (3 to 6 lb/h) As the liquid level in the pit rises, the emission rate increases to approximately 5 kg/h (10 lb/h). As the slurry in the pit melts, emissions increase to approximately 10 kg/h (25 lb/h). The average emission rate is assumed to be 3 kg/h (7 lb/h), or an emission factor of 20 g of benzene per megagram of coke. The benzene emission factors for the Denver flotation unit, the naphthalene melt pit, and the naphthalene drying tank were 87, 20, and 0.12 g/Mg of coke, respectively. The emissions from the drying tank varied highly, depending upon the fraction of benzene evolved in the previous step, the melt pit. The order of magnitude of these combined naphthalene processing emissions was consistent with emission estimates of Subsection 3.2.5.4. The emission factor for both naphthalene recovery and processing--107 g of benzene per megagram of coke--was obtained when emission factors for the individual steps in the process were summed.

Other potential emission sources from the final-cooler system are: (1) the heated tanks used to store the naphthalene-rich and lean tar of the tar-bottom final cooler; (2) the wash-oil collecting tank, circulation tank, decanter, and storage tank of the wash-oil final cooler; and (3) the storage tanks, sumps, and/or lagoon where the decanted wastewater and blowdown are piped for separation and storage. Emissions from these potential sources were not measured, although emissions from a wash-oil decanter that was a part of the wash-oil scrubber system were measured and are discussed in Subsection 3.2.6.1. Most of these sources are considered small, compared with the major benzene emission sources at by-product plants, such as the final-cooler cooling tower and tar decanters.

3.2.6 Light-Oil Processing

Light oil is a clear yellow-brown oil composed primarily of benzene (60 to 85 percent), toluene (6 to 17 percent), xylene (1 to 7 percent), solvent naphtha (0.5 to 3 percent), and over 100 minor constituents that boil between 0° to 200° C. The recovered quantity averages slightly less than 1 percent of the coal charge. Light-oil processing at by-product plants can consist of only light-oil recovery or light-oil recovery followed

by light-oil refining. About two-thirds of the by-product plants sell crude light oil, while the other third further refine the light oil.[31]

3.2.6.1 Light-Oil Recovery. Light oil is recovered from the coke oven gas in a wash-oil scrubber. The wash oil is petroleum straw oil with a boiling point above 200° C to allow effective separation from the light oil. This wash oil resists degradation, has a high absorptive capacity for light oil, has a low specific gravity (0.88 maximum) to aid in water separation, and does not react with the gas.[24] The wash oil is pumped to the top of a scrubbing tower and flows countercurrent to the coke oven gas entering from the bottom. These towers may be either tray, packed, or gravity spray towers that are operated as a single unit or with two or more in series. The wash oil is kept above the coke oven gas temperature to prevent water condensation and emulsification problems. The wash oil is circulated at 1.5 to 2.5 ℓ/m^3 of gas and will remove approximately 95 percent of the light oil. A variation of this process is to substitute a coal tar fraction for the petroleum wash oil.[27]

The benzolized wash oil (wash-oil and light-oil mixture) is separated by steam stripping. Live steam is injected into the bottom of a plate tower and the more volatile light oil is stripped overhead. The wash oil is recycled to the scrubber. This process, shown in Figure 3-9, includes a rectifier that separates the recovered light oil into two fractions: intermediate and secondary. The flow scheme would not include the rectifier if the crude light-oil fraction were the final product.

Emission sources in the light-oil recovery plant include atmospheric vents on light-oil storage tanks, process decanters, condenser vents, intercepting sumps, and contaminated sumps. These emission rates depend on the operating temperature and process design parameters.

Data for one light-oil storage tank indicate the following emission levels:[9]

- Benzene, 17.4 g/Mg coke;
- Toluene, 0.6 g/Mg coke; and
- Hydrogen sulfide, 0.5 g/Mg coke.

The benzene emissions from a light-oil storage tank at another by-product plant were measured as less than 12 kg/day, or about 25 g/Mg of coke.[20] The head space concentration in this tank was 110,240 ppm, indicating a

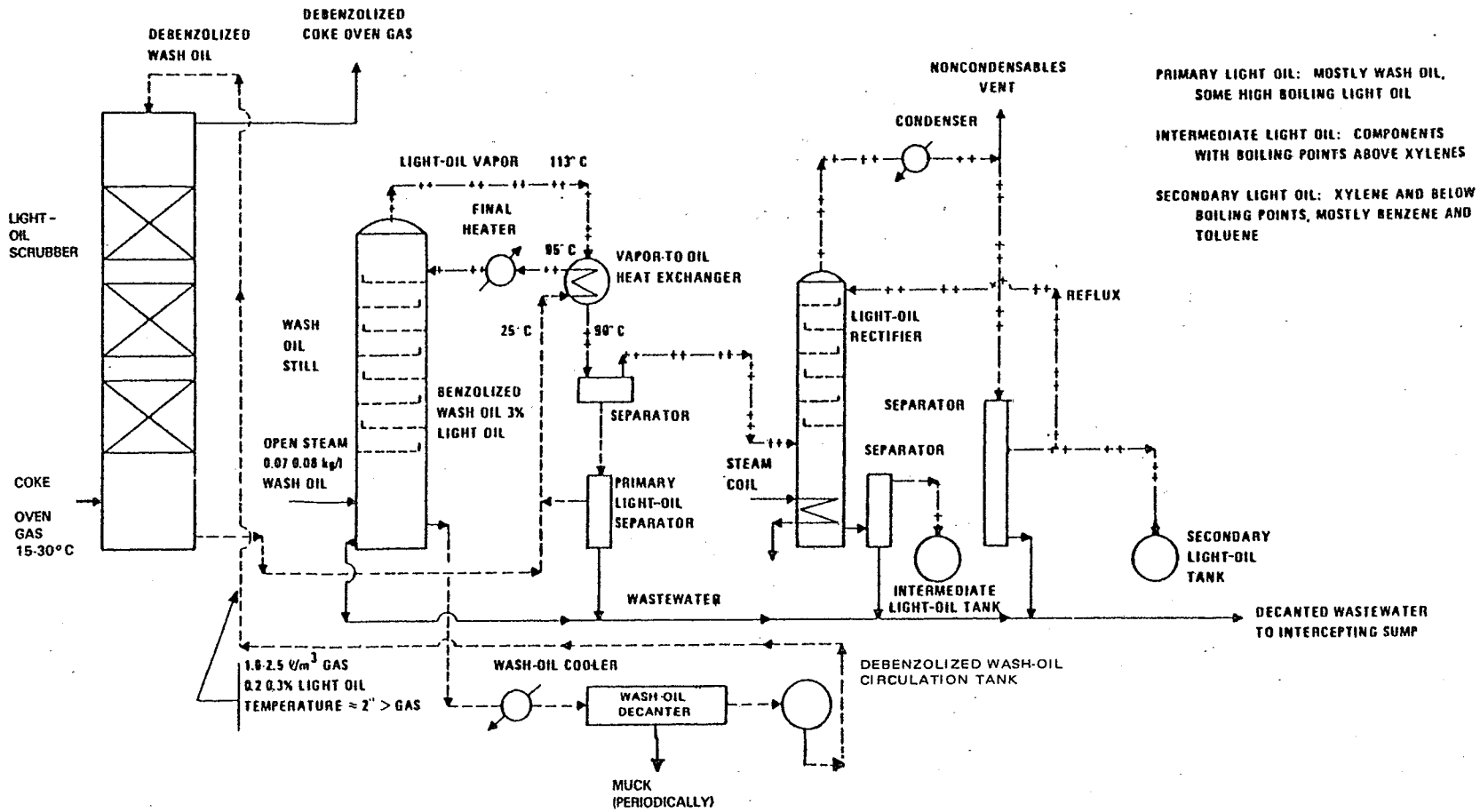

Figure 3-9. Wash-oil absorption of light oil with light-oil rectification.[9]

potential benzene emission from working losses.[21] The emissions from the tank vent are thought to be relatively low from breathing losses.

If the head space of a storage tank containing 75 mole percent benzene is permitted to attain equilibrium at 26° C, the vapor concentration of benzene would be 100,000 ppm (derived from 13,330 Pa/101,308 Pa × 10^6 × 0.75). This estimated value of vapor concentration can be used to estimate that the benzene emissions from working losses are 5.8 g/Mg of coke. These emissions are greater if the benzene-containing liquid is stored at a higher temperature.

In the light-oil system described by Wilson and Wells,[24] the coke oven gas rises through a wash-oil scrubber, and the effluent benzolized wash oil is preheated and stripped. The stripped vapors are partially condensed and the uncondensed vapor passes to a light-oil rectifier where the overhead consisting of benzene, toluene, and xylene (BTX), water vapor, and noncondensibles goes to a water-cooled condenser. The noncondensibles, which are saturated with BTX at temperatures up to 35° C in the summer, are vented to the air.

The noncondensibles cannot come from air leakage into the distillation system because the system is under complete, positive pressure. The feed of benzolized wash oil is not commonly stored in contact with air--the source of noncondensibles in many distillations. The most probable source seems to be coke oven gas dissolved in the wash oil at the scrubber.

The amount of noncondensibles to be vented can be estimated from the solubilities and the wash-oil rate. In Subsection 3.2.5, the solubility of coke oven gas in coal tar has been estimated to determine the amount of noncondensibles released in tar dewatering. Assuming the wash oil is chemically similar to tar in its ability to absorb benzene, the same estimation scheme applies in this case. The solubility at 25° C and 1 atm, a conservative estimate, is about 1 mole of gas per 1,000 moles of oil. The mean molecular weight of the oil is assumed to be 200.

According to Wilson and Wells, a rule-of-thumb circulation rate is 1.6 to 2.5 ℓ/stdm^3 of gas; 1 Mg of coal gives 160 kg (16,000 moles) of dry gas.[24] The corresponding wash oil is about 700 ℓ, 600 kg, or 3,000 moles. Approximately 3 moles of gas dissolve if the gas is at atmospheric pressure and 4 moles dissolve at 34,000 Pa (5 psig). At worst, the vent gas is

saturated with benzene at 35° C where its vapor pressure is about 19,000 Pa (140 mm Hg). Thus, the vent gas carries with it no more than 1 mole or 80 g of benzene per megagram of coal, or 110 g/Mg of coke. This benzene emission rate is clearly greater than that existing at the tar decanter because the amount of liquid exposed to the gas is much greater and the gas temperature is lower and its pressure is higher.

The emissions from the light-oil condenser vent were evaluated at a steel plant in Pennsylvania.[11] The benzene emission rate was 314 kg/day, or 115 Mg/yr. The emission factor of other light-oil condenser vents is assumed to be 89 g/Mg of coke produced, which is not inconsistent with the theoretical estimate presented earlier in this subsection.

The benzene that condenses in the light-oil condenser is collected in the light-oil decanter. If the light-oil decanter is open, significant benzene emissions can result, since the benzene concentration is high in the decanter. The light-oil decanter can vent through the light-oil condenser vent if it is enclosed and sealed.

Emissions from a wash-oil decanter used for light-oil recovery were measured at a by-product plant at a rate of 9.5 kg/day, or 3 Mg/yr.[16] This emission rate corresponds to an emission factor of 3.8 g of benzene per megagram of coke. Similar emissions are expected from the wash-oil circulation tank, which contains wash oil separated in the wash-oil decanter. The emission factor from the wash-oil circulation tank is assumed to be 3.8 g of benzene per megagram of coke.

3.2.6.2 Light-Oil Refining. Light-oil refining involves the use of fractional distillation to separate the crude light oil into its various components. Initial processing produces an intermediate light oil composed primarily of crude heavy solvent and naphtha. The light-oil vapors are condensed, and the forerunnings (cyclopentadiene, carbon disulfide, hydrogen sulfide, and other components boiling below benzene) are removed by distillation in another column. The light oil must be desulfurized before sale; this process is accomplished by a sulfuric acid wash to remove impurities, followed by neutralization and decanting of the aqueous waste. The washed BTX mixture is then distilled in a series of steam stills to separate the components.[27]

Light-oil refining onsite is often batch or semicontinuous because this practice increases the unit's flexibility. Products include the forerunnings, benzene of various purities, toluene and xylene, washed solvent naphtha, and crude solvent naphtha.

Emission sources in the light-oil refining plant include the atmospheric vents on the decanters and product storage. These emissions are likely to include benzene and its homologs and result from working and breathing losses of the tanks. Condenser vents are another source of emissions of noncondensibles as well as the vapor from benzene and its homologs.

3.2.7 Wastewater Processing

Depending on the coal type and coking practice, the flow of wastewater originating from the coke ovens and by-product plant is 100 to 200 ℓ/Mg of coke produced. Initially, the water is in the form of water vapor generated from vaporizing surface moisture on the coked coal and bound water in the coked coal. Water is also formed from the ultimate coke oven gas combustion, which is used to underfire the battery.

Most of the water vapor is condensed into the flushing liquid. This blowdown is the primary wastewater stream. Other sources of wastewater in the by-product plant are:

- Barometric condenser water from steam jets used to draw vacuum on the ammonia crystallizer,
- Steam stripping waste from wash-oil and light-oil decanters, and
- Blowdown from the final cooler.

In one sense, ammonia recovery and phenol recovery from excess-ammonia liquor are wastewater cleanup operations. However, for this document they are treated as by-product recovery processes.

Barometric condenser water from vacuum ammonia crystallizers is a high-volume wastewater (1,000 ℓ/Mg of coke). The waste can be greatly reduced in volume through use of surface condensers rather than barometric condensers. This step has led to an order of magnitude reduction in rate.[32] No literature reference has been found to suggest that this waste can be nearly eliminated through the use of vacuum pumps to draw the low pressure

on the crystallizer. Presumably, the service is thought to be too severe. An attempt has been made to use recycled water in a cooling tower, but this system had problems with corrosion and pH control.

Final-cooler blowdown is necessary to control the buildup of chlorides in the cooling water. A recycle system is recommended to minimize the wastewater volume. The final-cooler blowdown generally is combined with the excess-ammonia liquor for treatment.

Wash-oil and light-oil decanters generate approximately 300 ℓ of wastewater per megagram of coke produced. This waste results from steam stripping the wash oil to recover light oil. One firm has published plans to put its light-oil separator water into the final-cooler makeup. This wastewater also can be blended with the excess-ammonia liquor and treated at the wastewater facility.

Wastewater emissions are difficult to quantify. Benzene may be emitted from wastewater by aeration or evaporation from lagoons, sewers, and ditches. The waste steam may be combined with benzene-saturated wastewater with the release of benzene vapors into the atmosphere. Information about these wastewater sources is limited.

Sumps are one source of benzene emissions for which information is limited. The wastewater contained in a sump may emit benzene that is entrained or dissolved in the water. Benzene-containing liquids also may be present on the surface of wastewater in various sumps. Tar is recovered in common tar-intercepting sumps, and oil may be recovered from a light-oil sump.

Sump is defined here as a wastewater separation device containing one or several streams that flow into a decanter, pit, or tank. There, some of the organic materials may float to the top for separation and recovery. Many potential sources of benzene-containing water could be treated in a sump. Light oil is recovered by distillation from the wash oil and the condensate contains water. The water may be separated from the light oil in a process decanter and may then flow to another decanter or sump.

Because of the many conceivable combinations of process water flows and because of the absence of a detailed industry survey of sumps, benzene emission estimates from sumps are possibly one of the least reliable of the

various sources considered in this chapter. The sumps may be deep and narrow, or shallow and wide and may differ according to contents, degree of enclosure, and method of venting emissions.

Often a sump is open to the atmosphere and has oil containing benzene on the surface. Benzene diffuses into the atmosphere from a surface at a rate depending on the thickness of the boundary layer, the diffusion coefficient, and the concentration. An increased wind speed across the sump will tend to decrease the boundary layer and increase emissions. Also, the rate of transport is increased by temperature and benzene concentration activity at the surface. The shape of a sump is important because its area also can influence emissions. Partial enclosure can reduce emissions because it increases the boundary layer of air.

Benzene that is not emitted from an open sump and that remains in the water eventually can enter the atmosphere by evaporation during wastewater treatment or after discharge to a receiving body of water. The common light-oil intercepting sumps at two by-product plants emitted 41 and 56 kg of benzene per day.[19 33] These measurements correspond to benzene emission factors of 3 and 27 g/Mg of coke, respectively. The emission factor used for estimating emissions from light-oil-intercepting sumps is 15 g of benzene per megagram of coke, based upon the average emission factor obtained from the two sumps that were sampled. Measurements of the emissions from a common tar-intercepting sump of another by-product plant indicated 45 kg of benzene emissions per day.[21] The benzene emission factor for a common tar-intercepting sump for this plant is 95 g/Mg of coke. Each of these sumps emitted approximately 16 Mg of benzene per year. Emissions from the common tar-intercepting sump are the most important from these three sumps because of the potential for emitting tar components.

3.2.8 Fugitive Emissions from Leaking Equipment Components

Leaking valves, flanges, pumps, exhausters, sampling connections, pressure relief valves, and open-ended lines are potential sources of fugitive benzene emissions from coke oven by-product plants. Defective seals on valves, pumps, and other equipment can permit benzene to leak out of the process and evaporate into the air. Personnel exposure to these

types of fugitive emissions has been reduced by the use of respirators, benzene hazard signs, and building evacuation fans; but these cannot be considered environmental controls.

Benzene emissions from leaks can be significant when the benzene content of the leaking liquid is high or when quantities of leaking coke oven gas enriched with benzene are significant. Most of the benzene liquids are found in the light-oil recovery and refining parts of the by-product plants. The exhausters are potential sources of coke oven gas and benzene emissions since the benzene has not been recovered from the gas at that stage of the process.

Emission factors of volatile organic compounds (VOC's) from potentially leaking process units were obtained from an extensive investigation of petroleum refineries.[34] A source survey was also carried out at three by-product plants to determine whether emissions from leaking process units at coke oven by-product plants were similar to leaking process units at petroleum refineries.[35] The valves, pump seals, and exhausters were screened at each of these by-product plants and emissions were measured when the leaking sources were enclosed in a Mylar® bag and an equilibrium flow of air through the enclosure was analyzed. From the screening value distributions and the measured emission rates from most leaking sources, emissions from the by-product plants were estimated. These results are presented in Table 3-5. Emission factors from the petroleum refineries, also presented in Table 3-5, are lower than are emissions at by-product plants except for exhauster emissions, which were lower at by-product plants. The emission factors from the petroleum refinery surveys are believed to be more representative of leaking units because they are consistent with the by-product data and were developed from a larger data base than were by-product source data. Therefore, emission factors from the refinery data will be used to estimate emissions from leaking by-product equipment. It should be noted that the expected emissions from various by-product plants have a considerably greater range of variability than does the difference between the emission factors that were determined at by-product plants and at petroleum refineries.

Table 3-6 presents benzene emission factors for coke by-product plants that were obtained from the VOC emission factors of petroleum refineries.

TABLE 3-5. A COMPARISON OF EMISSIONS FROM LEAKS FROM BY-PRODUCT PLANTS TO THOSE FROM PETROLEUM REFINERIES

Source	Nonmethane organic emission factor petroleum and refinery[34] (kg/source day)	Nonmethane organic emission factor by-product plants[35] (kg/source day)	Benzene emission factor by-product plants[35] (kg/source day)
Valves (Light liquid)	0.26	0.43	0.25
Pump seals (Light liquid)	2.7	5.2	4.0
Exhausters	1.2[36]	0.37	0.087

TABLE 3-6. BENZENE EMISSION FACTORS DERIVED FROM VOC EMISSION FACTORS

	Percent of sources leaking initially	VOC emission factor (kg/source day)	Benzene emission factor (kg benzene/source day)	
			Plant A,[a] light oil, BTX	Plant B,[b] refined benzene
Valves	11	0.26	0.18	0.22
Pumps	24	2.7	1.9	2.3
Exhausters	35	1.2	0.28[c]	0.28[c]
Pressure relief devices	d	3.9	2.7	3.4
Sampling connnections	d	0.36	0.25	0.31
Open-ended lines	d	0.055	0.038	0.047

[a]70 percent benzene in light oil.

[b]86 percent benzene average in light oil and refined benzene.

[c]23.5 percent benzene in nonmethane hydrocarbon. (From Table 3-5, 0.087 ÷ 0.37).

[d]This type of information would not be appropriate for relief valve overpressure, sampling connections, and open-ended lines.

Two different types of plants were assumed to estimate these emission factors. Plant A had light-oil and BTX recovery with an average of 70 percent benzene in the benzene-containing light liquids. Plant B produced refined benzene in addition to the light oil with an average of 86 percent benzene in the light liquids. The estimated benzene emission factor at by-product plants was obtained by multiplying the VOC emission factor by the fraction of benzene in the liquid. Emission factors for exhausters were obtained by multiplying the VOC emission factor from compressors in hydrogen service by 0.235, because this was the measured ratio of benzene to nonmethane hydrocarbons present in the coke oven gas at the exhausters.[35]

The benzene emission factors from potentially leaking units in Table 3-6 can be used to estimate industry emissions. The number of units of each type at the different by-product plants was estimated and the emission factors for each unit were multiplied by the number of appropriate units at the plant.[36] This model plant approach is discussed in Chapter 6. The benzene emissions from leaking process units estimated by this procedure are a significant part of the overall emissions at coke oven by-product recovery plants.

3.2.9 Summary of Emissions

A summary of the major benzene air emission sources is provided in Table 3-7. The estimated emission rate for benzene is given for each source with the annual emissions from all by-product plants.

3.3 BASELINE REGULATIONS

The States listed in Table 3-8 have rules that govern the storage of VOC's and may be applicable to the storage of benzene and light oil. These States generally require vapor controls on storage tanks that hold more than 150 m^3 (40,000 gal) of organics with a vapor pressure greater than 10,000 Pa (1.5 psia). The vapor control must be a pressure tank with no vapor emissions, an edge-sealed floating roof, or a vapor recovery system. These States regulate 21 by-product recovery plants, which produce about 42 percent of U.S. coke capacity.

Six of these States also require vapor controls on organic compound water separators. This control is applicable to any separator that decants a light-oil/water mixture or a benzene/water mixture. Except for California's

TABLE 3-7. UNCONTROLLED BENZENE EMISSION FACTORS FOR COKE BY-PRODUCT PLANTS

Source	Emission factor (g benzene/Mg coke)	Industry emissions (Mg/yr)[36]
Cooling tower		
Direct-water	270	6,340
Tar-bottom	70	1,090
Light-oil condenser vent	89	4,080
Naphthalene separation	87	2,040
Naphthalene processing	20	470
Tar-intercepting sump	95	5,360
Tar dewatering	21	1,090
Tar decanter	77	4,350
Tar storage	12	680
Light-oil sump	15	780
Light-oil storage	5.8	300
BTX storage	5.8	80
Benzene storage	5.8	80
Flushing-liquor circulation tank	9	510
Excess-ammonia liquor tank	9	510
Wash-oil decanter	3.8	180
Wash-oil circulation tank	3.8	180
Pump seals	a	600
Valves	a	400
Pressure-relief devices	a	270
Exhausters	a	30
Sample connections	a	50
Open-ended lines	a	20
Total (rounded)		29,000

[a]Emissions were estimated on the basis of number of potentially leaking units. Emission factors are listed in Table 3-6.

TABLE 3-8. STATES REQUIRING VAPOR CONTROLS ON STORAGE TANKS AND SEPARATORS

State	Minimum tank size (m^3)	Minimum tank size (gal)	Minimum vapor pressure (Pa)	Minimum vapor pressure (psia)	Separators included	Minimum separator flow (ℓ/day)	Minimum separator flow (gal/day)
California	150	40,000	10,000	1.5	Yes	760	201
Colorado	150	40,000	10,000	1.5	Yes	760	200
Kentucky	150	40,000	10,000	1.5	Yes	760	200
Maryland	240	65,000	10,000	1.5	Yes	760	200
Michigan	150	40,000	10,000	1.5	Yes		No Minimum
Missouri	150	40,000	12,000	1.8	No		--
Pennsylvania	150	40,000	10,000	1.5	Yes	760	200
Wisconsin	150	40,000	10,000	1.5	No		--

TABLE 3-9. CALIFORNIA REGULATIONS FOR COKE OVEN BY-PRODUCT PLANTS

Rule 462 -	Required to install, maintain, and operate a vapor containment or collection system on transfer of light oil (BTX) from storage tanks (12- to 600,000-ℓ or 3- to 150,000-gal) to railroad cars.
Rule 463 -	Required to install, maintain, and operate an approved vapor containment collection system on (12- to 600,000-ℓ or 3- to 150,000-gal) light-oil storage tanks.
Rule 464 -	Required to cover all wastewater separators (eight tar decanters)
Rule 466 -	Required to install and maintain approved mechanical seals or equivalent on all pumps or compressors handling VOC's (11,000 Pa or 1.55 psi Reid or greater). Also inspect three times daily.
Rule 466.1 -	Required to inspect, record, and maintain all valves and flanges handling VOC's (11,000 Pa or 1.55 psi Reid vapor pressure or greater.)

regulations, no State regulations were found that would apply specifically to tar-decanter, tar-dewatering, tar storage, or cooling tower emissions. Table 3-9 lists relevant California regulations that can reduce benzene emissions from by-product plants.

3.3.1 Baseline Regulatory Requirements

The solid waste disposal guidelines are written with broad definitions of "solid waste" and "disposal" so they may be interpreted to include coke oven by-product plant emissions. For example, disposal is defined as including the placement of liquids or solids so any component may enter the environment, including fugitive air emissions.[37] The EPA Office of Solid Waste Management has not promulgated specific standards for by-product plant fugitive emissions, and there is no indication that they plan to provide specific standards.

In 1978, the Occupational Safety and Health Administration (OSHA) promulgated an exposure limit on airborne concentrations of benzene of 1 part benzene per million parts of air, regulated dermal and eye contact with benzene solutions, and imposed monitoring and medical testing requirements on employers whose workplaces contain 0.5 ppm or more of benzene.[38] The regulation originally applied to benzene emissions from any source in the plant but was amended to exempt benzene emissions from mixtures containing less than 1 percent benzene (i.e., storage tanks). However, the regulation subsequently was remanded to OSHA in 1980 because of an incomplete administrative record, coupled with the question of the cost/benefit associated with the standard.[39]

By-product recovery operations currently are subject to a benzene worker exposure limit of 10 ppm, based on an 8-hour time weighted average for a 40-hour week. A ceiling concentration of 25 ppm, with a maximum peak of 50 ppm (with a maximum duration of 10 minutes) for each 8-hour shift also is permitted. Engineering or administrative (work practice) controls could be required, if feasible, to meet the 10-ppm limit but usually are not necessary. If controls are not feasible to achieve full compliance, OSHA may require protective equipment or other measures.[40] For example, OSHA may require the use of a respirator for an employee repairing a leaking pump. The current regulation applies to benzene emissions from any source in the plant. It is anticipated that this regulation will be enforced for

at least 1 to 2 years while the more stringent benzene standard undergoes further Agency review.[41] The current OSHA standard is expected to have no influence on the baseline regulatory requirements because there are no equipment requirements.

3.4 REFERENCES

1. Sheridan, E. T. Supply and Demand for United States Coking Coals and Metallurgial Coke. Bureau of Mines, U.S. Department of the Interior. 1976. p. 18.

2. Telecon. Murphy, M., U.S. Department of Energy, with Lough, C., Midwest Research Institute. February 27, 1979.

3. Energy Information Administration, U.S. Department of Energy. Coke and Coal Chemicals in 1979. Energy Data Report. Washington, DC. October 31, 1980. p. 1.

4. Telecon. Sheridan, E. T., U.S. Department of Energy, with Lough, C., Midwest Research Institute. February 23, 1979.

5. Energy Information Administration, U.S. Department of Energy. Coke and Coal Chemicals in 1976. Coke and Coal Chemicals, Annual. Energy Data Report. Washington, DC. May 11, 1978. p. 5.

6. Reference 3, p. 2.

7. Reference 3, p. 6.

8. Reference 3, p. 4 and 5.

9. VanOsdell, D. W., et al. Environmental Assessment of Coke By-Product Recovery Plants. U.S. Environmental Protection Agency. Research Triangle Park, NC. Publication No. EPA-600/2-79-016. January 1979.

10. Baldwin, V. H., and D. W. Coy. Study to Develop Retrofit Information and Other Data for Use in Setting Standards for Coke Oven Emissions. EPA Contract No. 68-02-2612, Task 39. March 1978.

11. U.S. Environmental Protection Agency. Benzene Coke Oven By-Product Plants--Emission Test Report, Bethlehem Steel Corporation, Bethlehem, Pennsylvania. Research Triangle Park, NC. EMB Report No. 80-BYC-1. March 1981.

12. U.S. Environmental Protection Agency. Benzene Coke Oven By-Product Plants--Emission Test Report, Bethlehem Steel Corporation, Burns Harbor, Indiana. Research Triangle Park, NC. EMB Report No. 80-BYC-5. March 1981.

13. Baldwin, V. H. Environmental and Resource Conservation Considerations of Steel Industry Solid Waste. U.S. Environmental Protection Agency. Research Triangle Park, NC. Publication No. EPA-600/2-79-074. April 1979.

14. Roberson, R., and D. Marsland. Memorandum regarding emission testing at Bethlehem Steel Corporation, Bethlehem, Pennsylvania. July 28, 1980.

15. Allen, C. C. Trip Report to Republic Steel Corporation, Cleveland, Ohio. January 21, 1982, Research Triangle Institute. Research Triangle Park, N.C. January 27, 1982.

16. U.S. Environmental Protection Agency. Benzene Coke Oven By-Product Plants--Emission Test Report, U.S. Steel Corporation, Fairless Hills, Pennsylvania. Research Triangle Park, NC. EMB Report No. 80-BYC-8. March 1981.

17. U.S. Environmental Protection Agency. Benzene Coke Oven By-Product Plants--Emission Test Report, CF&I Steel Corporation, Pueblo, Colorado. Research Triangle Park, NC. EMB Report No. 80-BYC-6. March 1981.

18. Halberstadt, P. Trip Report to U.S. Steel Corporation, Clairton, Pennsylvania, April 30, 1979 and May 1, 1979. Research Triangle Institute. Research Triangle Park, N.C. April 10, 1980.

19. U.S. Environmental Protection Agency. Benzene Coke Oven By-Product Plants--Emission Test Report, United States Steel Corporation, Clairton, Pennsylvania. Research Triangle Park, NC. EMB Report No. 80-BYC-2. March 1981.

20. Coke Oven Emissions from By-Product Coke Oven Charging, Door Leaks, and Topside Leaks on Wet-Coal Charged Batteries. Background Information Document (Draft). Research Triangle Institute. Research Triangle Park, NC. March 1981.

21. U.S. Environmental Protection Agency. Benzene Coke Oven By-Product Recovery Plants--Emission Test Report, Wheeling-Pittsburgh Steel Corporation, Monessen, Pennsylvania. Research Triangle Park, NC. EMB Report No. 80-BYC-3. March 1981.

22. Carbone, W. F. Phenol Recovery from Coke Wastes. Sewage and Industrial Waste. 22(2):200. 1950.

23. United States Steel Engineers and Consultants, Inc. (a subsidiary of U.S. Steel). United States Steel Phosam Process. Bulletin 2-01.

24. Wilson, P. J., Jr., and J. H. Wells. Coal, Coke, and Coal Chemicals. New York, McGraw-Hill, 1950.

25. T. Nicklin, et al. U.S. patent no. 3,035,889. Assigned to Clayton Aniline Co., Ltd. United Kingdom.

26. Wilks, F. Phenol Recovery from By-Product Coke Waste. Sewage and Industrial Waste. 22(2):196. 1950.

27. McGannon, H. E. (ed.). The Making, Shaping, and Treating of Steel. 9th edition. Section 4. U.S. Steel Corporation. Pittsburgh, PA. 1971.

28. Perry, R. H., and C. H. Chilton. Chemical Engineer's Handbook. 5th edition. New York, McGraw-Hill, 1973.

29. McNeil, D. The Separation and Purification of Naphthalene, Anthracene, and Other Polynuclear Hydrocarbons. Coal Carbonization Products. Great Britain, Pergammon Press, 1966.

30. Letter from Thorpe, J. S., Bethlehem Steel Corporation, to Goodwin, D. R., U.S. Environmental Protection Agency. September 26, 1979. Response to Section 114 questionnaire "Current and Planned Emission Controls for Coke Oven By-Product Recovery Plants."

31. Energy Information Administration., U.S. Department of Energy. Coke and Coal Chemicals. Energy Data Report. Washington, DC. DOE/EIA-0122/1. October 1978.

32. Traubert, R. M. Weirton Steel Division Brown's Island Coke Plant. Iron and Steel Engineer. 55(1):61. 1978.

33. U.S. Environmental Protection Agency. Benzene Coke Oven By-Product Plants--Emission Test Report, Republic Steel Corporation, Gadsden, Alabama. Research Triangle Park, N.C. EMB Report No. 80-BYC-4. March 1981.

34. Mesich, F. G. Results of Measurement and Characterization of Atmospheric Emissions from Petroleum Refineries. In: Proceedings from Symposium on Atmospheric Emissions from Petroleum Refineries. U.S. Environmental Protection Agency. Publication No. EPA-600/9-80-013. March 1980. p. 139.

35. U.S. Environmental Protection Agency. Benzene Fugitive Leaks--Leak Frequency and Emissions Factors for Fittings in Coke Oven By-Product Plants. Research Triangle Park, N.C. EMB Report No. 81-BYC-12. January 1982.

36. Allen, C. C. Memorandum regarding Method of Estimating Coke Oven By-Product Plant Industry Emissions. Research Triangle Institute. Research Triangle Park, NC. May 28, 1981.

37. U.S. Congress. Resource Conservation and Recovery Act of 1976. Public Law 94-580. Washington, DC. U.S. Government Printing Office. October 21, 1976, as amended December 11, 1980.

38. Permanent Standard for the Regulation of Benzene. U.S. Occupational Safety and Health Administration. 43 Federal Register 5918, February 10, 1978, as amended, 43 Federal Register 27962, June 27, 1978.

39. U.S. Supreme Court. Slip Op. No. 78-911. Industrial Union Department, AFL-CIO vs. American Petroleum Institute, et al. July 2, 1980.

40. U.S. Occupational Safety and Health Administration Regulation for Benzene Exposure. 29 Code of Federal Regulations. Part 1910.1000. Office of the Federal Register, General Services Administration. July 1, 1980.

41. Telecon. Scott, M., Research Triangle Institute, with Martonic, J., Occupational Safety and Health Administration. April 7, 1981.

4.0 EMISSION CONTROL TECHNOLOGY

This chapter discusses the technology that has been or could be used to control benzene emissions from the by-product plant sources discussed in Chapter 3. A few of these controls have been demonstrated in by-product recovery plants; others, such as controls for product storage tanks, are obvious candidates for technology transfer from other industries with similarly controlled emission sources.

The major emphasis in this chapter is on emission controls that have been demonstrated for by-product recovery sources. The emission sources at most plants are uncontrolled, but a few plants have implemented and demonstrated control techniques for selected sources. Gas blanketing is the most widely demonstrated control technique and one of the simplest and most effective for by-product recovery plants. Various options exist for gas blanketing and are discussed in detail in the following subsections. In general, the principles of gas blanketing require sealing all of the source's openings to the atmosphere, supplying a constant-pressure gas blanket, and providing for the recovery or destruction of displaced vapor emissions.

To understand the operating principles of gas blanketing, consider the three cases of vapor flow for the schematic in Figure 4-1. The first case is for vapor flow out of the source's vent line, from pumping liquid into the tank, breathing losses, or from the continuous evolution of gas dissolved in the liquid. As the pressure in the vapor space increases above the constant pressure setpoint of the controller, the controller opens and relieves the excess pressure by venting the vapors to a recovery or destruction system. A second case occurs when liquid is pumped out of the tank. Then the blanketing gas

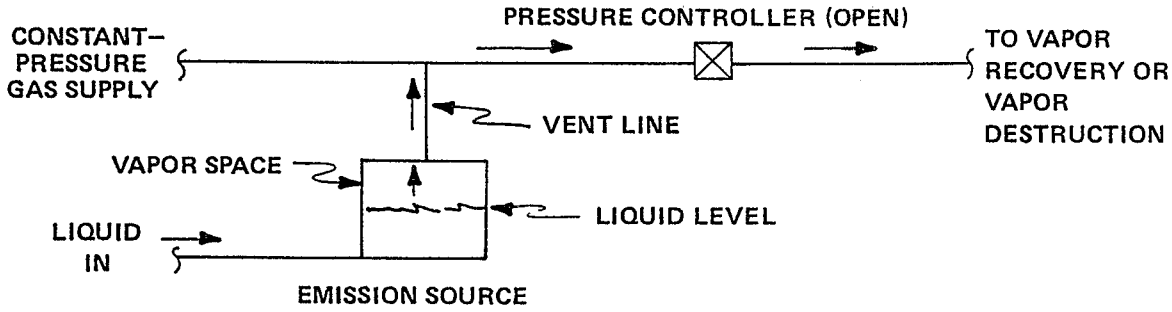

Case I. Emissions generated from pumping liquid, breathing losses, or evolution of dissolved gases.

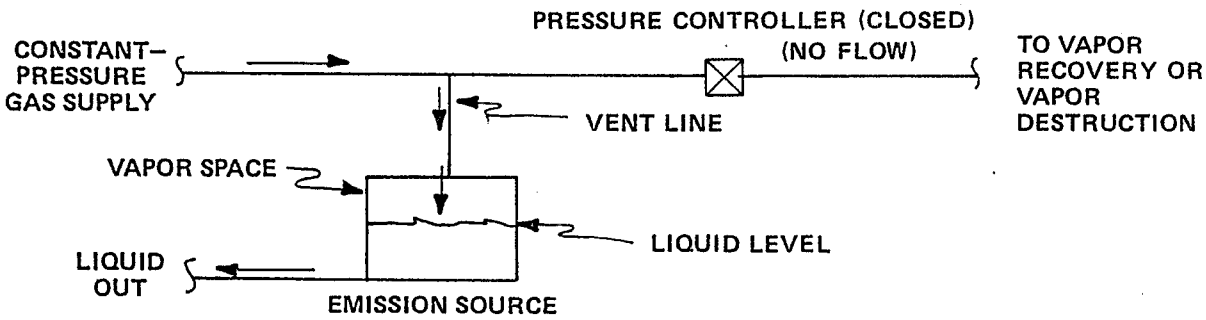

Case II. Maintaining constant pressure when pumping liquid out.

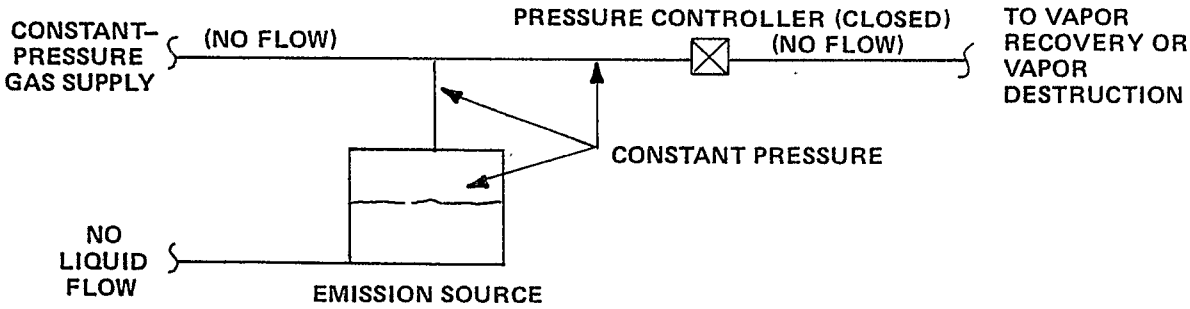

Case III. Static condition with no flow.

Figure 4-1. Vapor flow for a gas blanketing control system.

flows through the vent line into the vapor space to maintain a constant pressure, to relieve the partial vacuum, and to prevent the enclosed vessel from collapsing inward. The third case represents the static condition when the liquid level remains constant and there is no net evolution of gas or vapor from the liquid. For this case, there is no flow of blanketing gas or emissions, and the system remains pressurized at the constant supply pressure.

In by-product recovery plants, gas blanketing takes advantage of several unique characteristics of the by-product processes because the major elements of the system shown in Figure 4-1 are already in place. A constant-pressure gas supply is provided by raw coke oven gas in the collecting main or clean coke oven gas in the gas holder. A pressure controller is also in place because the Askania regulator controls the collecting main pressure, and gas holders have pressure controllers that maintain a constant pressure for underfiring the battery. For gas blanketing from the collecting main, vapor recovery systems are in place in the form of by-product recovery processes that remove organics from the raw coke oven gas (e.g., light-oil scrubbers). For gas blanketing from the gas holder, a vapor destruction system is in place because the clean coke oven gas is burned and the fuel value is recovered when the gas is used to underfire the coke ovens. Therefore, major requirements for gas blanketing are already in place and would not be purchased and retrofitted. Major cost items for the gas blanketing system in by-product recovery plants would be piping, valves, insulation, and equipment modifications for leak-tight enclosure.

This chapter also discusses other controls that have been demonstrated in by-product recovery plants or similar industries. For example, a wash-oil scrubber is used in by-product plants to absorb organics from gas streams in the light-oil recovery operation. Another demonstrated control is a processing equipment change to control emissions from cooling towers and naphthalene handling by altering the final-cooler process. Candidates for technology transfer include adsorption, vapor condensation, other forms of gas blanketing, other forms of vapor destruction, alternative controls for storage tanks, and controls for leaking equipment components.

Because a control technique may be applicable for several emission sources, for each control the applicable sources are described. For easy reference, Table 4-1 lists each source, the applicable control technique, and the subsection where the control is discussed.

4.1 GAS BLANKETING FROM THE COLLECTING MAIN

4.1.1 Applicable Sources

A coke oven gas blanket from the collecting main can be used to control emissions from the tar decanter, tar-intercepting sump, tar-dewatering tanks, tar storage tanks, flushing-liquor circulation tanks, and weak ammonia liquor storage tanks. The emission sources were chosen as a group because they are in close proximity to each other. In addition, all of these vessels are associated with the recovery of tar and ammonia liquor in the initial step of the by-product recovery process.

The close proximity allows the use of a common large header to supply coke oven gas to the area from the collecting main; smaller branches of piping connect the individual vent lines to the header. Because the liquid contents of these tanks come from water contact with the raw coke oven gas and subsequent separation of tar and flushing liquor, no contamination problems are expected from a raw coke oven gas blanket. An advantage in using coke oven gas from the collecting main for these sources is that additional organics are recovered in the tar and light oil instead of being vented to the atmosphere.

4.1.2 Description of Technology

A gas blanket from the collecting main is provided by making a pressure tap on the main, piping the gas to the by-product plant, and connecting the enclosed sources to the blanketing line. Vapor emissions from the sources would flow back into the collecting main and would be processed with the raw coke oven gas. If liquid were removed from an emission source, coke oven gas would fill the vapor space and maintain a constant pressure.

Gas blanketing from the collecting main has been implemented in the by-product recovery plant of Armco, Inc., in Houston, Texas.[1] The system at Armco was designed and installed by Koppers Company, Inc., a

TABLE 4-1. EMISSION SOURCES AND CONTROL TECHNIQUES

Emission source	Control technique	Subsection
Tar decanter	COG-CM	4.1
Flushing-liquor circulation	COG-CM	4.1
Tar-intercepting sump	COG-CM	4.1
Tar storage and dewatering	COG-CM WOS	4.1 4.4
Ammonia liquor storage	COG-CM WOS	4.1 4.4
Light-oil plant[a]	COG-GH	4.2
Light-oil sump	Enclosure	4.5
Light-oil storage	COG-GH WOS	4.2 4.4
Pure benzene storage	GB-GH WOS	4.3 4.4
Cooling tower and naphthalene handling	TBFC WOFC	4.6.1 4.6.2
Equipment leaks	Varies	4.8

COG-CM = coke oven gas blanket from the collecting main.
WOS = wash-oil vent scrubber.
COG-GH = coke oven gas blanket from the gas holder or underfire system.
GB-GH = nitrogen or natural gas blanket vented to the gas holder.
TBFC = tar-bottom final cooler.
WOFC = wash-oil final cooler.

[a]Includes the light-oil condenser and decanter, wash-oil decanter, and circulation tank.

major builder of coke batteries and by-product recovery plants. The following discussion describes the control system's design and requirements in general and is based primarily on the design demonstrated at the Houston plant. A simplified schematic of the Armco system is provided in Figure 4-2 for reference to the general discussion. Specific details on the Armco system are provided following the general discussion.

An explanation of collecting main operation is needed to describe how the control system works. Coke oven gas is generated from the coking of coal in the ovens and is removed through a series of standpipes on each oven. The standpipes are connected to a common, large duct called the collecting main that routes the coke oven gas to the by-product recovery plant. The pressure in the collecting main is very carefully controlled at 5 to 10 mm (0.2 to 0.4 in.) of water pressure by the battery operator because of the direct impact of collecting main pressure on the back pressure in the coke ovens. Coke plant operators have explained that pressure control in the collecting main is inherently reliable and must be reliable for the safe operation of the battery.[1 2 3] Pressure control is provided by the Askania regulator, and because of the importance of precise pressure control, a battery worker controls the pressure manually when any problems are experienced.

Excessive pressures and pressure excursions usually are controlled by a bleeder control valve that vents the excess pressure through a stack. A high collecting main pressure causes the battery operator many problems; e.g., unseating charging port lids, blowing standpipe caps or damaging standpipes, and causing voluminous emissions from coke oven doors. Negative collecting main pressures also are avoided because of more serious effects. Oxygen infiltration from the oven doors or topside can produce an explosive mixture in the collecting main, suction main, and every coke oven gas main (and associated process equipment) in the by-product plant. Negative collecting main pressure also causes serious heat damage to doors, door seals, jambs, and other parts of the battery structure. Because of the existing

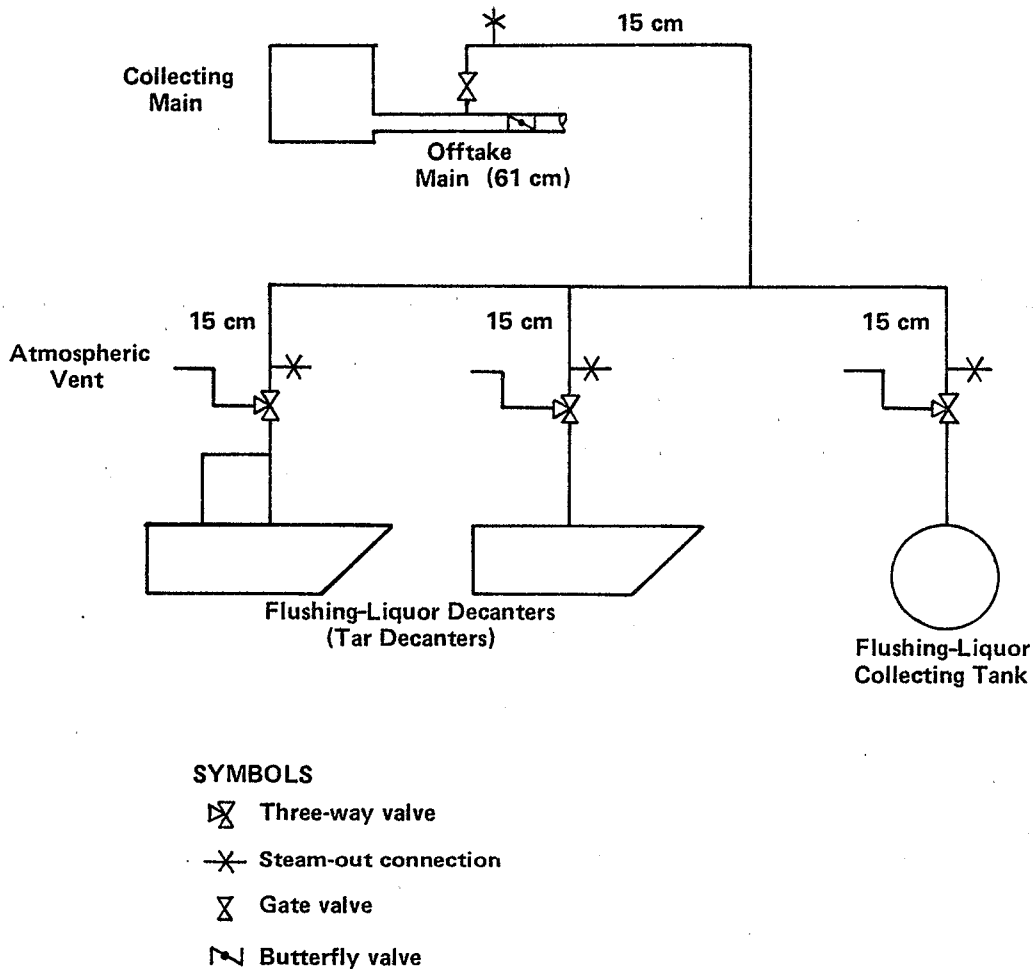

Figure 4-2. Gas blanketing of tar decanters and flushing-liquor tank from the collecting main.[1]

emphasis on precise pressure control, the collecting main is considered a reliable source for a gas blanketing control system.

Many design features and modifications to the emission sources must be considered for the gas blanketing to work effectively and safely. Each emission source must be enclosed to accept a slightly positive pressure without leaks to the atmosphere. For most storage tanks, enclosure would involve closing atmospheric vent lines and connecting the tank's vent line to the gas blanketing line. For riveted vertical tanks in poor condition, more extensive modifications may be required. For example, the roof may need to be replaced, welded, or sealed in some manner to avoid leakage of coke oven gas from existing gaps where the roof contacts the perimeter of the tank shell.

Tar decanters and tar-intercepting sumps may require more extensive modifications before a gas blanket can be applied. Tar decanter tops usually have a rectangular surface where the liquid is either exposed to the atmosphere or partially covered with concrete slabs set on steel support beams. For many plants, the decanter top must be removed, a water seal and metal cover installed, and gasket material added to provide a tight seal for the metal cover. A water seal for the tar decanter is illustrated in Figure 4-3.[4] The seal is a heavy plate structure suspended from the roof of the decanter near the sludge discharge chute that allows the major portion of the liquid surface to be blanketed at a small positive pressure. The remaining 13 percent[5] of the liquid surface provides clearance for the sludge conveyor and is open to the atmosphere. In summary, the following items are required to prepare the tar decanter for a positive-pressure gas blanket:

- Remove the existing cover,
- Blank pipelines,
- Clean and inspect the tank, and repair leaks;
- Install the steel plate cover, water seal, steel support beams, and gaskets;

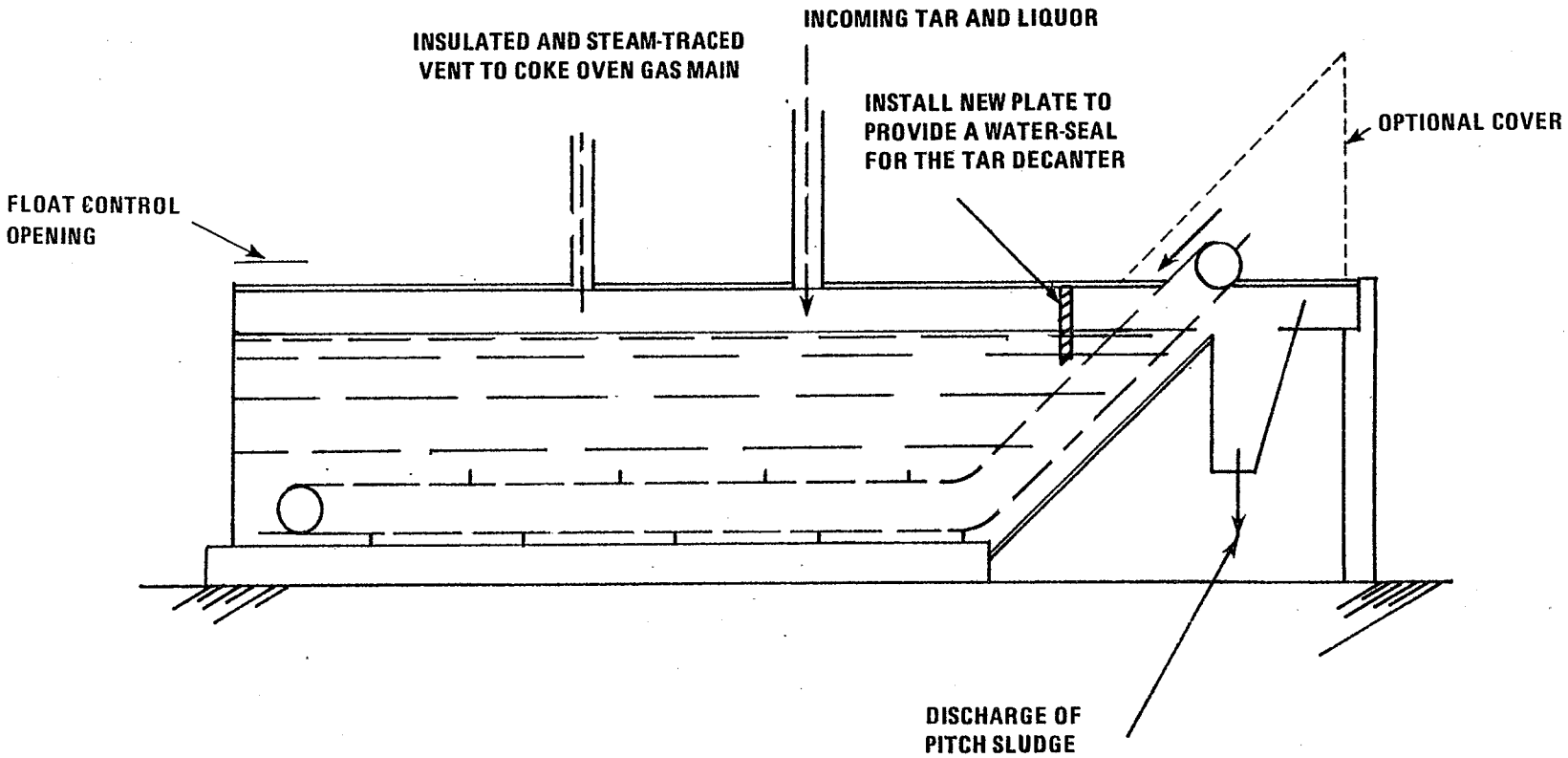

Figure 4-3. Seal and vent arrangement for tar decanter.

- Weld; and
- Add access openings and vent pipe.

The tar-intercepting sump requires the same modifications listed for the tar decanter except for the water seal. Because no sludge conveyor is used, the entire surface of the sump can be covered with metal plate and sealed with gasket material.

Heat tracing and insulation are important design considerations for this application. The vented emissions and the raw coke oven gas contain tar and naphthalene that can condense and plug lines and valves. Although heat tracing and insulation should prevent this condensation and accumulation in the vent lines vent and drain connections are included in the design for steaming out lines should the need arise.

Each vessel would be equipped with three-way lubricated plug valves to avoid sticking because of tar deposits. Valve connections are arranged so that in one position the tank is vented to the collecting main and in the other position the tank is vented to the atmosphere. This arrangement permits the blanketing line and the tank(s) to be isolated for maintenance or visual inspections and ensures that the tank is vented at all times. In either position, the plug valve provides a clear opening for the passage of vapors and prevents pockets where tar may accumulate and interfere with the opening and closing of the valve.

4.1.3 Demonstration of Gas Blanketing from the Collecting Main

Gas blanketing from the collecting main was installed at Armco's Houston Works between 1976 and 1977 and was operated successfully until the coke battery shut down in 1981. The gas blanket was applied to two tar decanters and a flushing-liquor circulation tank as shown in Figure 4-2. The tops of the tar decanters were enclosed up to the sludge conveyor with a 6-mm (0.25-in.) steel plate and sealed with gasket material. Access hatches on the decanter and circulating tank

also were covered and sealed. A vertical manifold of small valves was installed to allow the operator to determine the level of tar and flushing liquor in the tar decanter.[1]

The gas blanketing line was a 15-cm (6-in.) pipe connected to the 61-cm (24-in.) offtake main upstream of the Askania regulator (butterfly control valve). Three-way valves, atmospheric vents, and steam-out connections for line cleaning were installed; all of these lines were steam traced and insulated. The blanketing pressure was typically controlled at 6 mm of water with a range of 4 to 8 mm of water. No significant operating problems were experienced with the control system.[1]

The system at the Houston Works was not extended to control emissions from ammonia liquor or tar storage. (Armco installed a wash-oil scrubber for these sources, as discussed in Subsection 4.4.) However, the same gas blanket could be applied to these storage tanks if the tanks were enclosed and connected to the gas blanket lines, as described in the general discussion. Armco personnel indicated that three tar-collecting tanks, which were connected to a negative-pressure vent system (see Subsection 4.7.1), also could have been controlled by gas blanketing from the collecting main.[1]

4.1.4 Control Efficiency

The benzene control efficiency of the gas blanketing system depends upon three major factors: leakage, the efficiency of benzene removal in the light-oil scrubbers, and the efficiency of the underfire combustion systems. Approximately 90 to 95 percent of the benzene in coke oven gas is removed in the light-oil recovery process,[6] and 5 to 10 percent remains with the gas and is incinerated. Incineration efficiencies up to 99 percent have been reported for control of gasoline vapors,[7 8] and similar or higher efficiencies are expected in the combustion of coke oven gas because of higher operating temperatures and longer residence times. Assuming a periodic inspection and maintenance program prevents leaks, a control efficiency in excess of

99 percent would be expected for the gas blanketing system. However, considering that a leak might develop and would require some time to repair, a more conservative estimate of 98 percent control efficiency is reasonable.

These control efficiency estimates apply only to emissions collected within the gas blanketing system. Because the tar decanter would not be covered completely (to allow sludge removal), control efficiency for the tar decanter emissions is estimated to be 95 percent.

4.2 GAS BLANKETING WITH CLEAN COKE OVEN GAS

4.2.1 Applicable Sources

A coke oven gas blanket from the gas holder or battery underfire system has been used to control emissions from the light-oil condenser, decanter, and storage tank; wash-oil decanter and circulation tank; and benzene-toluene-xylene (BTX) storage.[1 3 9] These emission sources are generally in close proximity to each other in an area called the light-oil plant, and all are associated with the recovery of light oil (70 percent benzene). The close proximity allows the use of a common large header to supply coke oven gas to the area from the gas holder; smaller branches of piping connect the individual vent lines to the header. No contamination problems are expected because this gas blanketing control has been demonstrated for these sources with both desulfurized and undesulfurized coke oven gas. Collected emissions from all of the sources would be added back to the coke oven gas to recover their fuel value in the gas combustion system.

4.2.2 Description of Technology

A positive-pressure blanket of clean coke oven gas is provided by making a pressure tap at the gas holder or underfire gas supply, piping the gas to the light-oil plant, and connecting the enclosed sources to the blanketing line. Vapor emissions from the sources would flow back into the clean gas system and ultimate control would be provided by combustion of the coke oven gas.

Available data indicate that at least three by-product recovery plants have implemented gas blanketing of emission sources in the light-oil plant.[1 3 9] One plant installed such a system as early as

1954 and has since continued operation without difficulties.[3] The following discussion describes the control system and provides details on the three demonstrated applications. A simplified schematic containing the major design details is given in Figure 4-4 for reference to the general discussion.

After by-product removal, the clean coke oven gas is used to underfire the coke ovens and to provide a fuel source for other combustion processes. A few plants have desulfurization facilities and most do not; however, both sulfur-containing and desulfurized coke oven gases have been demonstrated in this application. The clean coke oven gas is maintained at a constant pressure, typically 36 to 46 cm (14 to 18 in.) of water by a gas holder. The gas holder has an existing pressure controller, and pressure excursions are prevented by a bleeder control valve on the gas holder. The bleeder control valve vents at about 51 cm (20 in.) of water, and in addition, many gas holders have a water seal that will blow at about the same or slightly higher pressure.[2] A continuous supply of blanketing gas is available because the gas is required for underfiring the battery. Most plants have a source of natural gas that is used to supplement or replace the coke oven gas in the gas holder or underfire system in the event that the supply of coke oven gas is interrupted.[1 2 3]

Several design features and modifications to the emission sources must be considered for positive-pressure blanketing with clean coke oven gas to work effectively and safely. Each emission source must be enclosed to accept the positive gas pressure without leaks to the atmosphere. For most vessels in the light-oil plant, enclosure includes closing all vents to the atmosphere and connecting the vessel's vent line to the gas blanketing line. The light-oil condenser and horizontal tanks require few modifications to withstand a pressure of 36 to 46 cm (14 to 18 in.) of water.[1 3 9] However, old storage tanks, particularly riveted vertical tanks in poor condition, may require extensive modifications to withstand the pressure without leakage to the atmosphere. Because of gaps in the roofs of these tanks, extensive repairs, sealing gaps, or replacing the roof would be required.[3]

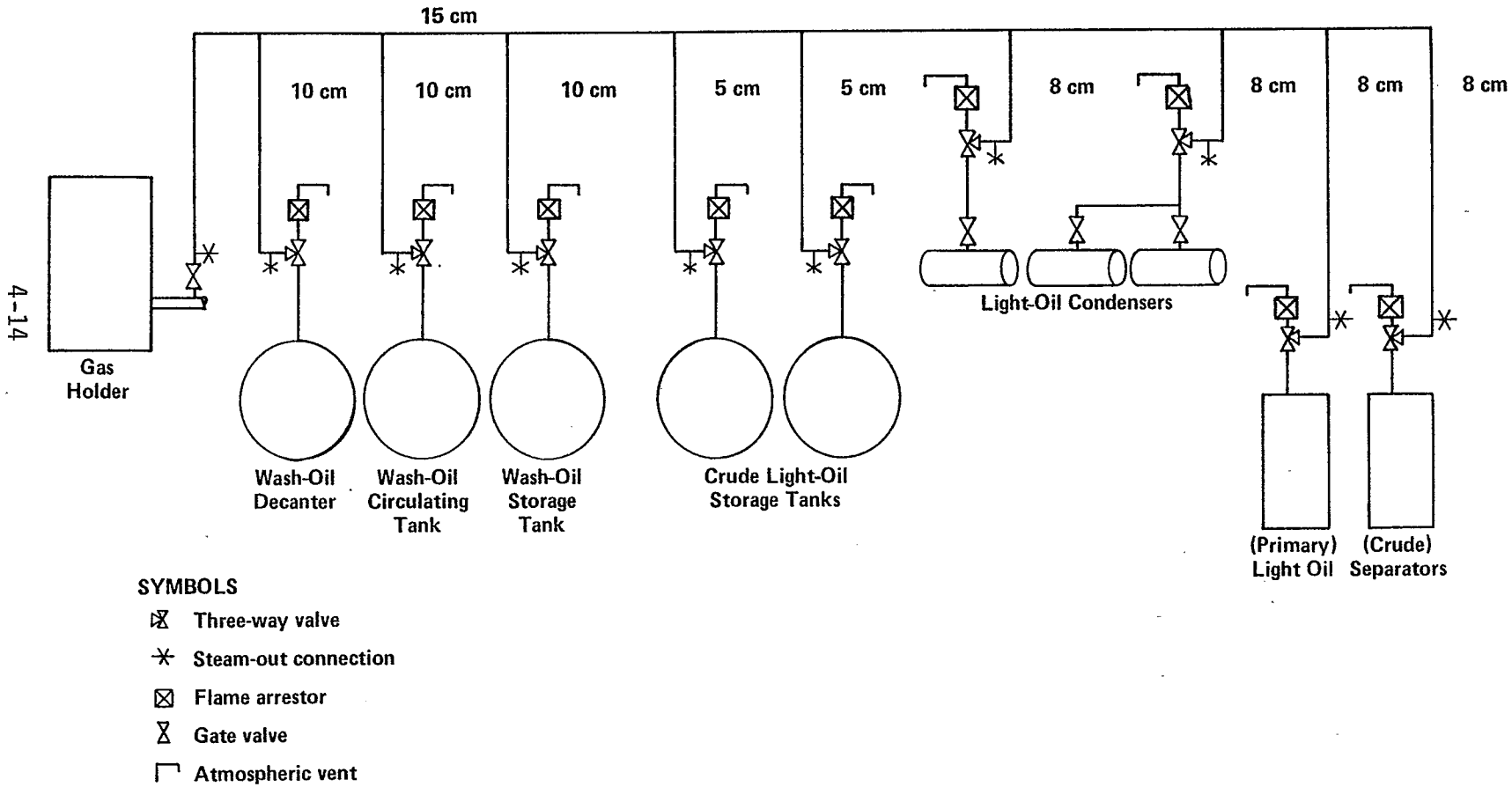

Figure 4-4. Gas blanketing of a light-oil recovery system.[1]

Heat tracing and insulation are recommended for all of the blanketing lines to avoid condensation, accumulation, and plugging in the lines. As shown in Figure 4-4, steam-out connections are provided for line cleaning if necessary. Three-way lubricated plug valves are installed so the blanketing line or vessels can be isolated for maintenance, line cleaning, or visual inspection. The valve arrangement ensures that the emission source is vented at all times, either to the atmosphere or to the coke oven gas main. Flame arrestors are installed in the atmospheric vent lines to prevent flame propagation into the tank should emissions ignite while they are vented to the atmosphere. Many plants already use flame arrestors in this application.

Gas blanketing of vessels containing light oil or benzene reduces the fire and explosion hazard associated with these vessels when they are vented to the atmosphere. Currently, the vast majority of by-product plants do not use gas blanketing and the vents on light-oil storage tanks are open to the atmosphere. When the atmospheric vent is open, oxygen can enter the vapor space when the tanks are emptied periodically or when significant cooling takes place. This oxygen infiltration can cause the vapor in the tank to be within the explosive limits of vapor. Applying a positive-pressure blanket eliminates oxygen infiltration and maintains the vapor space in the tank above its upper explosive limit. Eliminating oxygen also reduces sludge formation in the tanks and process equipment that contain wash oil and light oil. The sludge results from the oxidation reaction between oxygen in the air and wash oil or light oil.

4.2.3 Demonstration of Gas Blanketing with Clean Coke Oven Gas

Gas blanketing of the light-oil plant has been demonstrated at Bethlehem Steel Corporation's Sparrows Point plant;[3] Republic Steel Corporation's Cleveland plant;[9] and the Armco, Inc., plant in Houston.[1] At Sparrows Point, undesulfurized coke oven gas from the gas holder is used to blanket wash-oil decanters, circulation tanks, collecting tanks, and wastewater storage tanks in Plants A and B. The system was installed in Plant B in 1954, and a similar system was installed in Plant A as part of the conversion to a wash-oil final cooler.[3]

The main supply for the gas blanket is a 20-cm (8-in.) line connected to the coke oven gas line exiting the wash-oil scrubbers. The various tanks are connected with a 15-cm (6-in.) line that runs from the 20-cm (8-in.) supply to the top of each tank. An isolation valve is installed in each tank's vent, and steam-out connections are provided for line cleaning. Each tank is also equipped with 5-cm (2-in.) atmospheric vent lines and flame arrestors, but these lines are closed during normal operation. None of the gas blanketing lines are heated or insulated. Water U-seals are placed in the 20-cm (8-in.) line to help remove condensate and to protect the system from excessive pressures. No safety relief valves, pressure controllers, pressure or flow monitors, alarms, or explosive limit detectors are on the tanks.[3]

The Bethlehem Steel personnel indicated no problems with the gas blanketing system and minimal maintenance requirements. The cost of the installation was justified because it prevented oxidation, sludge formation, and fouling of lines and equipment. The gas blanket prevents oxygen in the air from contacting the wash oil and light oil, which react with the oxygen to produce a sludge. When sludge formation is avoided, there is a large savings in labor to clean the final cooler, heat exchangers, and piping.[3] In addition, solid waste disposal costs are not incurred for the potentially hazardous sludge.

A gas blanketing system was installed in Republic Steel's Cleveland plant in 1960. In Plant 1, desulfurized gas from the battery underfire system is used to blanket the wash-oil decanters, circulation tanks, rectifier separators, primary light-oil separators, secondary light-oil separators, light-oil condensers, and final-cooler circulation tanks. In Plant 2, an undesulfurized gas blanket is applied to the primary and secondary light-oil separators, rectifier separators, and wash-oil circulation tanks.[9]

The main supply line for the coke oven gas is a 15-cm (6-in.) line with 5-cm (2-in.) lines connecting separators and 10-cm (4-in.) lines connecting the decanters to the supply line. The gas blanketing lines to each source are steam traced and insulated to minimize condensation and fouling; in addition, four drip points are installed so any

condensate could be drained from the lines.[9] Other design features of the system are similar to those described previously for the Sparrows Point plant.

Plant personnel stated that routine maintenance on the gas blanketing system was minimal. Routine inspections include a monthly check of the seals in the flame arrestors and quarterly inspections of piping and other equipment. When line cleaning is necessary, a steam supply is connected and the lines are steamed out. The purpose of the blanketing system is to reduce sludge formation (as described for Sparrows Point), and the system was reported to work well in performing this function.[9]

The Houston plant of Armco, Inc., installed gas blanketing in the light-oil plant between 1976 and 1977 and used the system until the coke batteries shut down in 1981. A schematic of the Armco system is provided in Figure 4-4. A blanket of undesulfurized coke oven gas from the gas holder was used to control emissions from the wash-oil decanter, circulation tank, storage tank, two light-oil storage tanks, three light-oil condensers, and two light-oil separators. Each of these emission sources was equipped with three-way valves, flame arrestors, steam-out connections, steam tracing, and insulation as discussed previously in the general description. No major modifications or repairs were required to pressurize the emission sources.[1]

A 15-cm (6-in.) line from the gas holder supplied the gas blanket to the light-oil plant. Vent connections to the supply line were 10 cm (4 in.) in diameter for the wash-oil tanks, 5 cm (2 in.) for the light-oil storage tanks, and 8 cm (3 in.) for the light-oil condensers and separators. The gas blanket was maintained at a pressure of 38 cm (15 in.) of water by the gas holder. Plant personnel reported no significant operating difficulties with the system.[1]

4.2.4 Control Efficiency

The benzene control efficiency of the gas blanketing system depends upon the amount of leakage and the efficiency of combustion in the underfiring system. The temperature and residence time of the coke oven gas in the combustion system are expected to result in efficiencies of 99 percent or greater. (Incineration efficiencies of

99 percent have been reported for gasoline vapors.) Assuming periodic inspection and maintenance minimize leaks, an estimated 98-percent control efficiency for the gas blanketing system is reasonable.

4.3 NITROGEN OR NATURAL GAS BLANKETING

4.3.1 Applicable Sources

A gas blanket of nitrogen or natural gas can be used to control emissions from pure benzene storage tanks. By-product plant operators have claimed that coke oven gas should not be recommended as the blanketing medium because of product quality specifications for the pure benzene and the possibility of contamination from components (e.g., sulfur compounds) in the coke oven gas.[2 9] For pure benzene storage tanks, emissions from breathing or working losses would be routed to the coke oven gas main and burned in the gas combustion system. Alternatively, emissions may be routed to the gas main before light-oil removal and recovered in the wash-oil scrubbing operation.

4.3.2 Description of Technology

The choice of blanketing gas depends upon existing gas supplies in the plant, proximity of the supply to the tank, and reaction or contamination considerations between the blanket gas and the liquid in the tank. Nitrogen or natural gas was considered for blanketing pure benzene storage tanks because most by-product plants have an existing supply of one or both. For example, coke plants that are part of an integrated steelmaking complex may have access to nitrogen from their oxygen plant associated with steelmaking.[9] Most coke plants have a source of natural gas used to supplement the coke oven gas; to replace the coke oven gas in emergency situations; or to underfire the coke ovens during startup, idle, or controlled shutdown of the coke battery.[1 2 3]

The major elements of a nitrogen or natural gas blanketing system must be purchased and installed, whereas the coke oven gas blanketing systems use many elements already in place. The gas must be purchased or routed to the by-product recovery plant, a pressure controller installed to control supply pressure, and another pressure controller installed where emissions are vented to maintain the blanketing pressure. A schematic of a gas blanketing system is given in Figure 4-5.

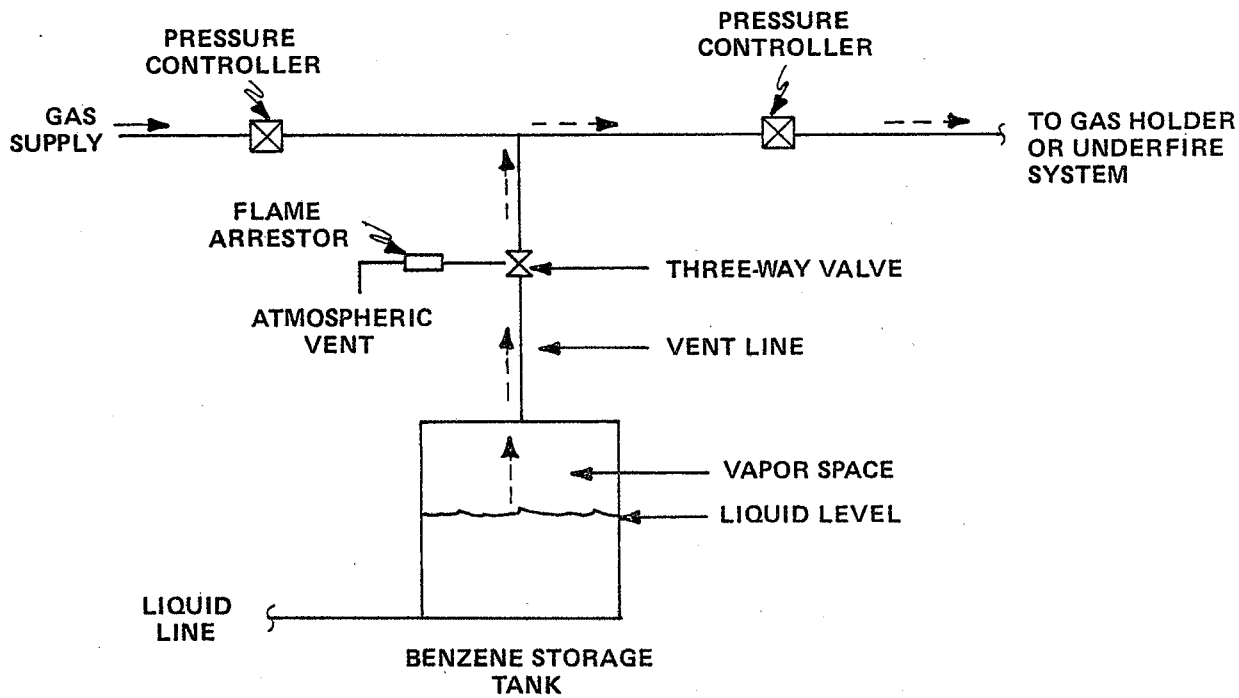

Note: Dashed arrows show emission's flow.

Figure 4-5. Schematic of a nitrogen or natural gas blanketing system.

The pressure controller or pressure reducer controls the supply pressure of the gas at 38 to 46 cm (15 to 18 in.) of water. Because displaced vapors are vented to the gas holder, which is maintained at 46 cm (18 in.) of water, another pressure controller is installed to prevent backflow of coke oven gas and to maintain the blanket pressure. When the pressure in the tank's vapor space increases to above 46 cm (18 in.) of water, the pressure controller opens and vents the vapors to the gas holder. When liquid is removed from the tank, more blanketing gas is provided through the pressure controller on the gas supply to maintain a constant pressure. Under static conditions with no liquid or vapor flow, the system remains pressurized with no net flow of the blanketing gas or vapor emissions.

The benzene storage tanks must be enclosed to accept a positive-pressure gas blanket without leaking. For some storage tanks, enclosure is accomplished when the tank's atmospheric vent line is connected to the gas blanketing line. Modifications may be required for old riveted storage tanks that are not currently leak tight. The extent of the modifications will depend upon the tank's condition and may include sealing and repairing the roof, replacing the roof, or replacing the tank.

Heat tracing and insulation would be required for the gas blanketing line from the benzene storage tank to the vapor destruction system. Line heating would be most important for winter operations because benzene freezes at 5.5° C (42° F). Three-way valves would be installed on each storage tank to allow the tank to be vented at all times, either to the control system or to the atmosphere. The ability to vent to the atmosphere is necessary to isolate the tank from the gas blanket, to perform maintenance or visual inspections of the inside of the tank, and to prevent loss of the blanketing gas if the tank is emptied or taken out of service. Flame arrestors would be installed in the atmospheric vent lines to reduce the fire and explosion hazard when the tank is vented to the atmosphere.

Nitrogen blanketing of benzene storage tanks has been applied at the Aliquippa Works of J&L Steel, but displaced emissions are not

controlled.[10] Currently, nitrogen is used to blanket crude light-oil storage tanks to prevent sludge formation. However, emissions are vented to the atmosphere and are not vented to a vapor recovery or destruction device.

The control efficiency of a nitrogen blanketing system that is vented to a vapor recovery or destruction device depends upon the same factors as that of a coke oven gas blanketing system: extent of leakage and combustion efficiency. Assuming the gas blanketing lines are well maintained with little leakage, an efficiency of 98 percent or greater should be obtained with this control system.

4.4 WASH-OIL SCRUBBERS

4.4.1 Applicable Sources

A wash-oil scrubber can be used to control emissions from the various storage tanks in the by-product recovery plant. The wash-oil scrubber has been applied to weak ammonia liquor tanks, tar storage tanks, and tar-dewatering vessels.[1] Other potential applications include light-oil storage tanks, BTX storage tanks, and pure benzene storage tanks.

The applicability of a wash-oil scrubber as an efficient control device to sources with heated vapors (e.g., tar-dewatering and tar storage tanks) depends upon the temperatures of the vapors in the scrubber. The vapors must be cooled for the scrubber to be effective, either by a condenser or by a sufficiently high flow rate of cool wash-oil spray.

An advantage of the wash-oil scrubber over gas blanketing is the applicability to old storage tanks in poor condition. The pressure drop through the wash-oil scrubber is negligible; therefore, modifications to old tanks are minimal because the tanks are not subjected to pressures significantly higher than the normal operating conditions.

4.4.2 Description of Technology

The wash-oil scrubber would be installed on the side of the storage tank or in a centralized location to control emissions from several storage tanks. The emissions enter the bottom of the scrubbing chamber and contact a spray of wash oil that is introduced into the

top of the spray chamber. The wash-oil spray absorbs benzene from the vent vapors. After passing through the scrubber, the benzolized wash oil is routed to the light-oil recovery plant for removal of benzene and other organics from the wash oil. The debenzolized wash oil is then recycled to the wash-oil scrubber.

The process of absorbing benzene from a gas stream with a wash-oil scrubber is not new to the by-product recovery industry. The coke oven gas leaving the final cooler contains about 2 percent benzene that is removed in a wash-oil scrubbing operation. Most by-product recovery plants remove the light oil (primarily BTX) from the coke oven gas by contacting the gas with liquid petroleum wash oil in a scrubbing tower (absorber). The inlet wash oil, containing about 0.2 percent light oil, is sprayed into the top of the wash-oil scrubber and flows through spray nozzles to contact the gas stream. The outlet wash oil contains 2 to 3 percent light oil and removes 90 to 95 percent of the light oil from the coke oven gas.[6]

Recent designs of wash-oil scrubbers are not fitted with hurdles or packing to accomplish gas-liquid contact. Contact is accomplished by the use of single conical sprays placed at two or three elevations in the tower. Restrictions to gas flow by accumulated residues commonly found in packed scrubbers are minimized or eliminated in scrubbers of this design.[6] Wash-oil scrubbers currently used for light-oil removal are large towers designed to handle high volumes of coke oven gas. Applying this scrubbing operation to the vented emissions from storage tanks results in a much smaller scale design for the scrubbing chamber and a lower wash-oil circulation rate.

The Houston plant of Armco, Inc., used a wash-oil scrubber to control the vented emissions from two tar storage tanks, an ammonia liquor storage tank, and an ammonia liquor sump. A simplified schematic of the control system for the Houston plant is given in Figure 4-6. The system was installed between 1976 and 1977 and was operated without difficulty until the coke battery was shut down in 1981.[1]

The two tar storage tanks shown in Figure 4-6 have capacities of 1.6 million ℓ (425,000 gal) and 280,000 ℓ (75,000 gal). Tar is dewatered in the larger tank by steam heating for 6 days and settling for 1 day.

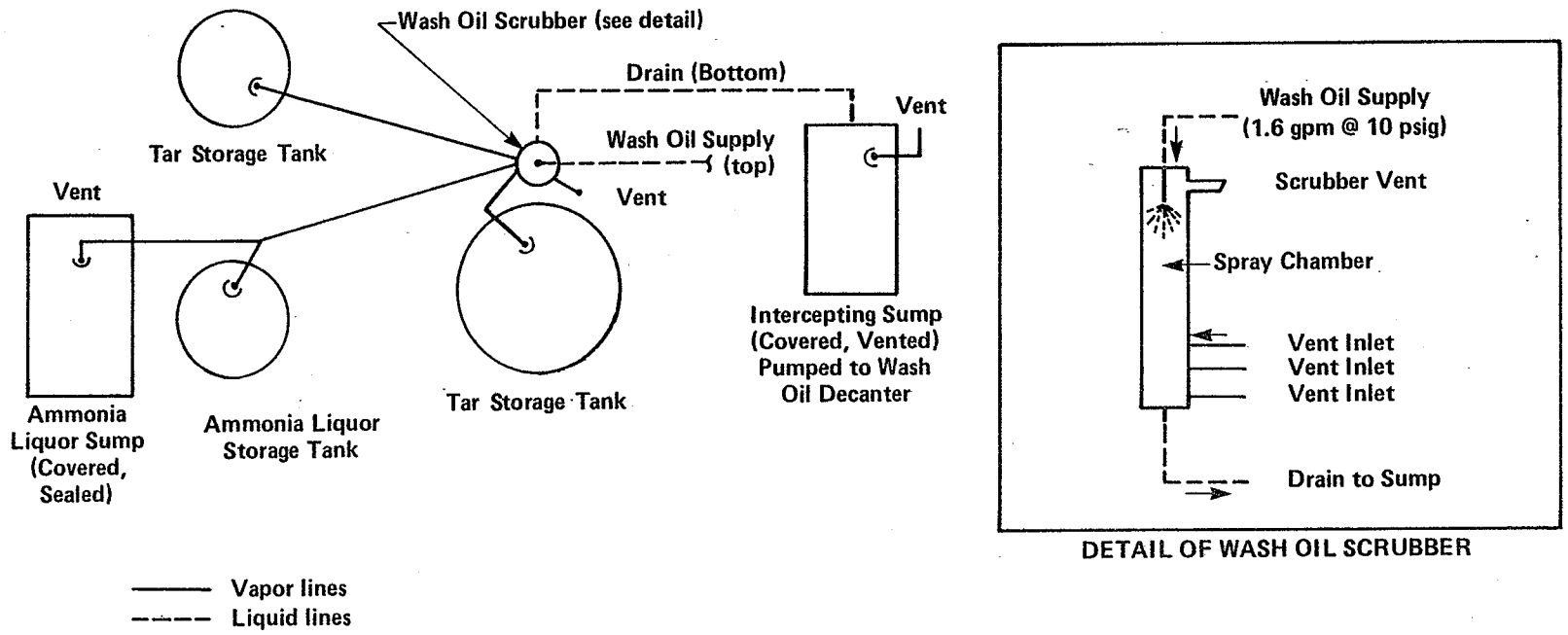

Figure 4-6. Wash-oil scrubber for vents on tar storage, ammonia liquor storage, and sump.[1]

The tar is then transferred to the smaller tank and sold locally. The ammonia liquor storage tank has a capacity of 280,000 ℓ (75,000 gal), and the ammonia liquor sump has dimensions of 3.7 m by 6.7 m (12 ft by 22 ft). These sources were enclosed when the access manways were covered and sealed and the atmospheric vent lines were connected to the scrubber entrance. The sump was enclosed with a 1-cm (0.375-in.) metal cover and gasket, and access openings that were installed in the sump cover were also sealed with gasket material.[1]

The scrubber is a metal chamber with a diameter of 0.3 m (1 ft) and a length of 3.7 m (12 ft). Debenzolized wash oil is supplied to the top of the scrubber through a 2.5-cm (1-in.) supply line at 0.1 ℓ/s (1.6 gal/min) through a spray nozzle. (The design and operating gas flow rates were not available.) The scrubbed vent gases exit the scrubber through a 20-cm (8-in.) vent line, and the wash oil is removed from the scrubber by gravity drain through a 7.6-cm (3-in.) drain line. The wash-oil drain runs to an enclosed sump that routes the wash oil to the wash-oil decanter in the light-oil recovery system. Organics are removed in the light-oil recovery system, and a slipstream of debenzolized wash oil is recirculated to the top of the spray scrubber.[1] The debenzolized wash oil is removed from the hot side of the wash-oil heat exchanger at about 110° C (230° F) and enters the scrubber as hot wash oil. Plant personnel could not explain why hot wash oil was used instead of cooled wash oil at 32° C (90° F). Hot wash oil has a much lower solubility for benzene (boiling point = 80° C) and other volatile compounds than cool wash oil has.

The diameter of the vent lines range from 7.6 cm (3 in.) to 15 cm (6 in.). The 7.6-cm (3-in.) vents from the ammonia liquor storage tank and sump combine at a 10-cm (4-in.) line that enters the base of the scrubber. Each of the tar tanks has a 15-cm (6-in.) vent line that enters the base of the scrubber.[1]

4.4.3 Control Efficiency

No emission test results or estimates were available for the control efficiency of the wash-oil scrubber at the Houston plant. The low solubility of benzene in the hot wash oil, which is above the

boiling point of benzene, indicates that this scrubber was not designed for control of benzene emissions. The solubility of benzene in hot wash oil at 110 to 130° C is only 5 to 10 percent of the solubility of benzene in cool wash oil at 25 to 30° C. The hot wash oil that enters this scrubber is near the temperature that is used to strip (remove) benzene, toluene, and xylene from the benzolized wash oil in the wash-oil still. These factors lead to the conclusion that the scrubber with hot wash oil would not control benzene emissions.

Many factors in the design and operation of a scrubber affect its performance. The rate and efficiency of absorption at constant pressure depend on (1) the chemical and physical properties of the solvent (wash oil) and the solute (benzene or light oil), (2) the operating temperature, (3) the contacting efficiency of the column, and (4) the gas and liquid flow rates.

The type of scrubber and packing also affect control efficiency. In unpacked scrubbers, the gas is in contact with droplets of wash oil sprayed into the top of the chamber. These spray scrubbers have the advantage of a very low pressure drop, and they do not foul by sludge accumulation on packing or bubble trays. Demisters often are added at the top of the spray chamber to remove liquid droplets entrained in the countercurrent gas flow. Packing could be used in the lower part of a spray chamber to increase the surface area available for mass transfer and reduce the backmixing due to turbulent air currents. Packed-bed scrubbers are more suitable for storage vessels that do not contain tar in the gas than for dirty gases that could foul the packing. Packed-bed scrubbers can be designed with very low pressure drops, depending on the type of packing, the gas and liquid flow rates, and the required benzene removal efficiency.

Two important factors influence the rate and efficiency of benzene absorption in a spray chamber. The first factor is the amount of benzene vapor absorbed by the wash oil at equilibrium. This quantity can be represented by the partition factor, K, which has been expressed in the literature as the concentration of benzene in the wash oil divided by the concentration of benzene in the vapor at equilibrium, where the units of concentration are the same for both phases. Parti-

tion factors for benzene and xylene in wash oil are given in Table 4-2 as a function of temperature.[11] The partition factor for benzene decreases with increasing temperature; i.e., benzene is less soluble in wash oil at higher temperatures than at lower temperatures. The fairly high values of K shown in Table 4-2 indicate that benzene is quite soluble in wash oil. Other light-oil components such as xylene are more soluble than is benzene in wash oil at a given temperature; i.e., they are more strongly partitioned (separated) from the gas into the liquid.

The second major factor affecting control of benzene emissions is scrubber's contacting efficiency. One measure of this efficiency is the number of theoretical equilibrium stages provided by the scrubber. A theoretical stage is an operation in which liquid and gas phases are brought into contact with each other such that the two phases are in equilibrium after the operation. A number of theoretical stages may be required to attain a specified separation or removal efficiency. The number of theoretical stages is thus a measure of a particular scrubber's effectiveness for benzene removal. For example, the benzene concentration in the vapor leaving the top of the scrubber would be in equilibrium with the wash oil leaving the bottom of the scrubber if the scrubber were equivalent to only one theoretical stage. For a scrubber with a performance greater than that obtained with one theoretical stage, the vapor phase benzene concentration leaving the scrubber would be lower. The number of theoretical stages in a particular scrubber design is a function of the four factors previously listed.

Table 4-3 illustrates the percent control of benzene in a wash-oil spray chamber using the theoretical relationship developed by Lowry.[11] The parameter KL/G is the product of the partition factor (K), the liquid rate (L), and the gas rate (G), in consistent units. Table 4-3 indicates that benzene removal efficiency increases when KL/G increases, even with a low number of theoretical stages. Scrubber design can be optimized through cooling the wash oil or gas (increases K), increasing the wash oil flow rate (increases L), or modifying the design and adding packing (increases the number of theoretical stages).

TABLE 4-2. PARTITION FACTORS FOR BENZENE AND XYLENE IN WASH OIL[11]

Temperature (°C)	Partition factor, K (liquid concentration/gas concentration)[a]	
	Benzene	Xylene
25	650	7,570
80	114	716
130	36.4	170

[a]Same concentration units must be used (e.g., g benzene/L wash oil and g benzene/L gas)

TABLE 4-3. PERCENT CONTROL OF BENZENE IN A WASH-OIL SPRAY CHAMBER[11]

$\frac{KL}{G}$	Number of theoretical equilibrium stages			
	1	2	5	10
0.5	33.3	42.9	49.2	50.0
1.0	50.0	66.0	83.0	91.0
1.5	60.0	78.9	95.2	99.4
2.0	66.0	85.0	98.0	99.9
5.0	83.3	96.8	100.0	100.0
10.0	90.9	99.1	100.0	100.0
20.0	95.2	99.8	100.0	100.0

K = partition factor, liquid concentration/gas concentration.

L = wash-oil flow rate, in units consistent with K and G.

G = vent gas flow rate, in units consistent with K and L.

A small-scale study of variables affecting benzene absorption from air by petroleum wash oil in a spray tower has been reported with approximately 30 to 90 percent benzene recovery.[12] The benzene removal was found to be a function of the gas flow rate, the liquid flow rate, and the height of the spray chamber. In practical wash-oil spray systems for by-product plant applications, higher recovery rates can be obtained when scrubber design is altered. For example, the diameter of the wash-oil droplet could be decreased from the 1.5 to 2.0 mm in diameter in the study, the length of the scrubbing chamber can be increased from the 1.4-m reported length, and the wash-oil flow rate can be increased.

Engineering design calculations were performed to examine the potential application of wash-oil scrubbers to storage tanks holding light oil, BTX, benzene, and ammonia liquor.[13] [14] The calculations were based on the following worst case assumptions: (1) maximum gas feed rate to the scrubber of 19 ℓ/s (40.1 ft^3/min) resulting from a maximum anticipated liquid displacement rate of 19 ℓ/s (300 gal/min); (2) a maximum gas phase benzene concentration of 17 percent by volume (corresponding to storage of pure benzene liquid at 90° F); and (3) maximum scrubber operating temperature of 90° F. Two other design parameters assumed, not falling in the category of "worst case," were the following: (1) the spray nozzle that distributes wash oil within the column produces a mean droplet diameter of 1 mm; and (2) the smallest droplet produced by the same nozzle has a diameter of 0.2 mm. These calculations indicated that a wash-oil scrubber with an 8-in. inner diameter, an active height of 13 ft, and a wash-oil (solvent) feed rate of 0.5 gal/min will achieve a continuous benzene control efficiency of at least 90 percent from these sources.

For sources with gas phase benzene concentrations of less than 17 percent and for smaller gas phase (vent system) flow rates, smaller scrubbers with correspondingly lower wash-oil feed rates can be designed. However, a scrubber of the design summarized above will ensure that 90 percent efficiency is achieved at design (worst-case) conditions and that the benzene concentration in the absorber offgas stream can be maintained at or below the design level.

The previous discussion indicates that high control efficiencies can be obtained and have been demonstrated for wash-oil scrubbers. Based on data presented by Lowry, properly designed and operated wash-oil scrubbers theoretically can provide benzene control efficiencies of 95 percent or greater; however, the highest known control efficiency demonstrated so far is 90 percent. Supplemental cooling may be required to obtain a 90-percent control efficiency for sources with heated vapors. The cooling may be supplied by indirect heat exchange (e.g., shell in tube condenser) or by using a sufficiently high flow rate of cool wash oil.

4.5 ENCLOSURE

Control of emissions from the light-oil sump can be accomplished by covering the sump to reduce evaporative losses. Most sumps in by-product plants are pits that receive liquid streams from various processing steps. The liquid surface for most sumps is uncovered and completely open to the atmosphere; however, a few plants have covered or partially covered sumps. Enclosure is accomplished by installing a steel cover, sealing the cover, and adding access manways and a vertical vent. In such an installation, the edge of the sump cover would rest in a trough around the edge of the sump, and a gasket material in the trough would prevent emissions from the edge of the sump cover.

This enclosure procedure is the same as that described in Subsection 4.4.2 for the Armco, Inc., plant's ammonia liquor sump. At this plant, the sump was covered with a 1-cm (0.375-in.) steel cover and gasket. Access manways were installed in the steel cover to provide ready access for maintenance, cleaning, and visual inspection.[1]

The purpose of the sump cover is to protect against wind that might blow benzene vapors out of the sump into the environment. For example, emissions from an open light-oil sump were measured as 56 kg of benzene per day, suggesting that the equivalent of approximately 146,000 ℓ per day of saturated benzene vapors are blown from the sump.[15] Enclosing the sump would limit emissions primarily to working losses (from increasing the liquid level in the sump) and breathing losses (from increasing the temperature of the liquid in the sump). The control efficiency of a sump cover is difficult to determine and depends upon many factors, such as wind speed, temperature, benzene concentration, and liquid throughput. For sumps operated at or near a constant liquid level, a 98-percent control efficiency is estimated for a tight cover compared to the uncontrolled situation with wind blowing across the exposed liquid surface.

4.6 CONTROL OF COOLING TOWER AND NAPHTHALENE-HANDLING EMISSIONS

By-product plants that recover light oil cool the coke oven gas from 60° C to 25° C in an operation called final cooling. The purpose of the final cooler is to lower the gas temperature before the coke

oven gas enters the wash-oil scrubbers to improve absorption efficiency and to optimize light-oil recovery. Three forms of final cooling generally are used by the industry and, depending on the type, the nature and quantity of benzene emissions are quite different.

Approximately 23 plants with about 43 percent of the total U.S. coke capacity use a process called direct-water final cooling. In this process, the coke oven gas is cooled by direct contact with water, naphthalene and other organics condense in the water, naphthalene is removed by physical separation, and the water is recycled through a cooling tower back to the final cooler. Because some benzene condenses and is removed with the direct-contact water, benzene emissions result from the naphthalene/water separation and from the cooling tower as air strips the residual benzene from the cooling water. The direct-water final cooler produces much greater benzene emissions than do the other two processes; for this reason, the direct-water final cooler will represent the uncontrolled case for benzene emissions from the cooling tower and naphthalene handling.

The demonstrated control technology for these emissions is based on the other two major final cooling processes; i.e., the tar-bottom final cooler and the wash-oil final cooler. These two final cooling processes will be discussed as control alternatives for the uncontrolled case represented by the direct-water final coolers.

4.6.1 Tar-bottom Final Cooler

The tar-bottom final cooler is used by approximately 18 by-product recovery plants. The coke oven gas is cooled by direct contact with water, but the water is then sent through tar in the bottom of the final cooler. The tar removes naphthalene and some other organics from the water, the tar and water are separated, and the water is then cooled in a cooling tower. The tar-bottom cooler does not eliminate benzene emissions from the cooling tower, but it does eliminate benzene emissions from the physical separation of naphthalene and water. The naphthalene remains with the tar and is sold, or it may be removed in a tar-refining operation.

A plant would not need to replace the direct-water final cooler with a tar bottom to obtain the benefits of a tar-bottom final cooler.

A one-stage mixer-settler containing tar could be inserted into the final cooling process to remove naphthalene from the direct-contact water. At a scale of 4,000 Mg of coke per day, with a 20° C increase in water temperature through the final cooler, approximately 4,800 Mg of cooling water per day is required for final cooling and should contact a roughly comparable quantity of tar. The daily production of whole tar for this size plant is about 160 Mg, about 30 Mg of which is light tar. Because light tar is cleaner and less viscous than whole tar is, light tar is more desirable for use in a tar mixer-settler. If the light tar is recirculated from the settler at a rate 100 times the production rate, the effective tar circulation rate is 3,000 Mg/day. The combined stream of 4,800 Mg/day of water and 3,000 Mg/day of tar could be forced through an orifice-plate mixer and into a tar settler or decanter. The settler should provide a residence time of 30 minutes, with a vent back to the gas exiting the final cooler. The water will be circulated from the settler to the cooling tower in the usual way. A sketch of this retrofit design for a tar-bottom final cooler is presented in Figure 4-7.

In Chapter 3, benzene emissions from the cooling tower were estimated as 270 g/Mg coke for a direct-water final cooler and 70 g/Mg coke for a tar-bottom final cooler. A control efficiency of 74 percent is thus estimated for cooling tower emissions through the installation of a tar mixer-settler or tar-bottom process. Naphthalene handling and processing are eliminated; therefore, the control efficiency is estimated as 100 percent for these emission sources.

4.6.2 Wash-oil Final Cooler

Available data indicate that five by-product recovery plants use a wash-oil final cooler. The coke oven gas is cooled by direct contact with cool wash oil, which also removes the naphthalene. The wash oil is circulated through an indirect heat exchanger, cooled, and then returned to the final cooler. A slipstream of the wash oil containing naphthalene is routed to light-oil recovery, and a makeup stream of lean wash oil is added back to the final cooler circulation loop.

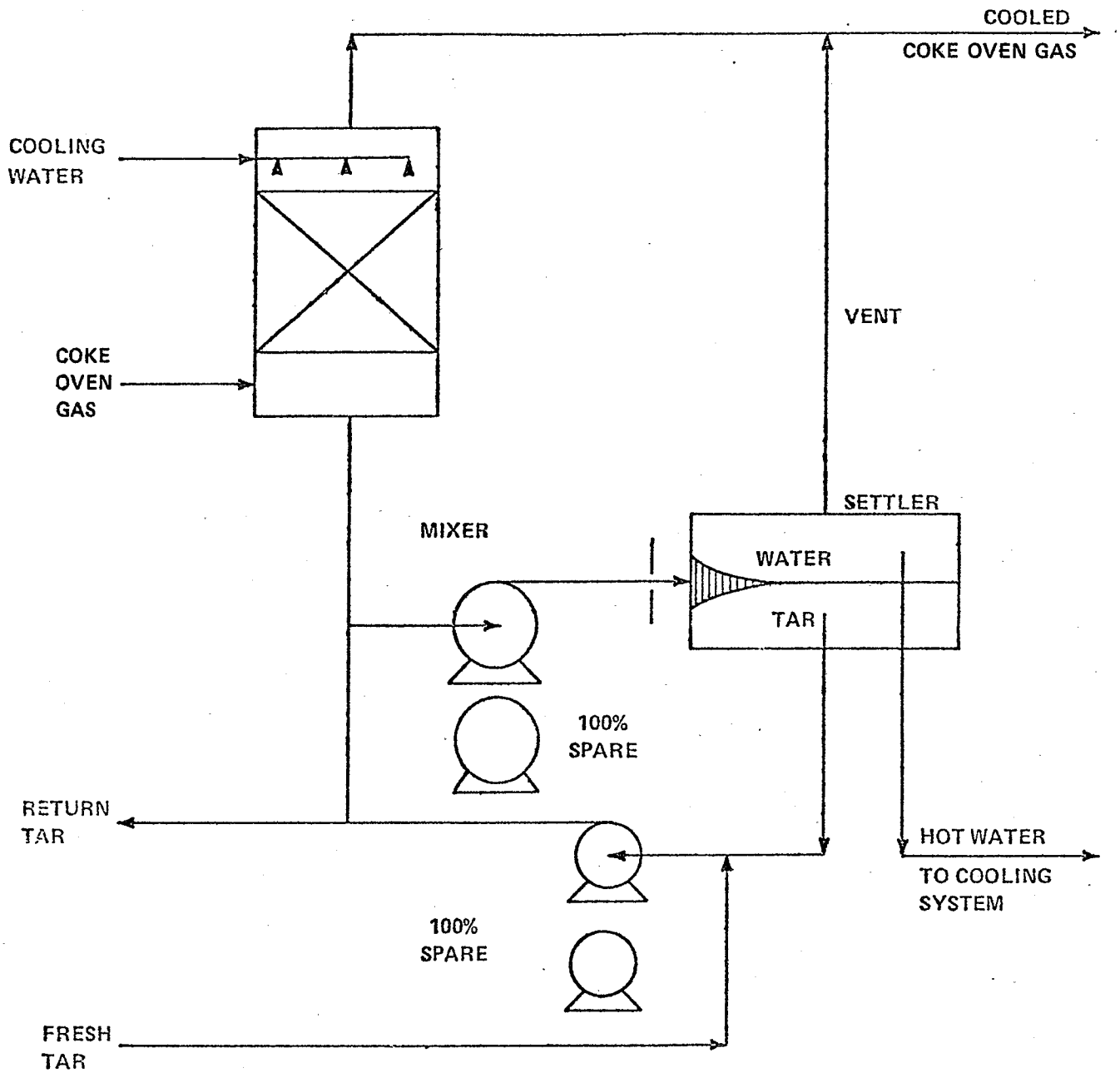

Figure 4-7. Mixer settler.

The wash-oil final cooler eliminates emissions from naphthalene handling because the naphthalene is removed in the wash oil. Benzene emissions from the cooling tower of a direct-water or tar-bottom final cooler also are eliminated. This final cooling process effectively eliminates the benzene emissions associated with a direct-water final cooler by cooling the wash oil with indirect (noncontact) heat exchange and eliminating the need for a cooling tower.

A wash-oil final cooler has been retrofitted at the Sparrows Point plant of Bethlehem Steel Corporation.[3] Figure 4-8 contrasts the process flow diagram of a direct-water and wash-oil final cooler. Although some existing process lines could be used, conversion of a direct-water final cooler to a wash-oil final cooler would require the installation of new process equipment. In addition, the final cooler probably would have to be retrofitted with new spray nozzles, pumps, and piping.

The control efficiency of a wash-oil final cooler compared to the uncontrolled case of a direct-water final cooler is estimated as 100 percent for emissions from both the cooling tower and naphthalene handling. This efficiency is obtained by eliminating the cooling tower and the physical separation of naphthalene in the final cooling process.

4.7 ALTERNATIVE CONTROL TECHNIQUES

This section will discuss control techniques that have been demonstrated in a few specific applications in by-product recovery plants and others that are candidates for technology transfer from other industries. These controls are discussed separately, and the applicability of two controls operating in series is also discussed as a method for improving overall control efficiency.

4.7.1 Venting to the Suction Main

The suction main is that part of the coke oven gas main between the Askania regulator and exhausters that is maintained at a negative pressure of -200 to -300 mm of water. The exhausters provide the motive force for the coke oven gas by pulling the gas (negative pressure)

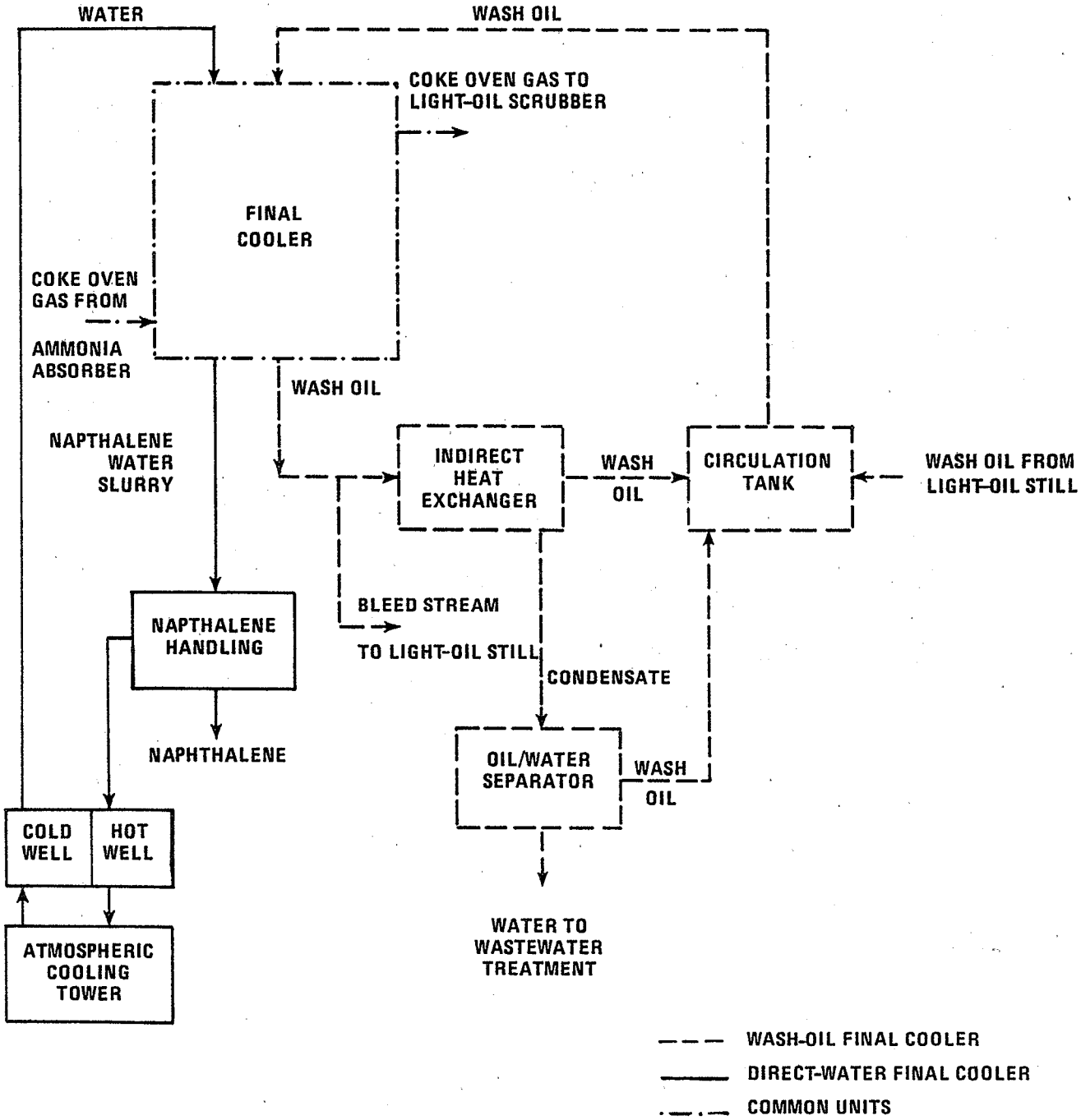

Figure 4-8. Conversion of a final cooler from water to wash oil cooling medium.

through the suction main and primary coolers and by pushing the gas (positive pressure) through the by-product recovery processes downstream of the exhausters. Emission control could be accomplished by enclosing the source to accept a negative pressure without leakage inward and then connecting the vent line to the suction line at the primary coolers. Emissions would enter the by-product recovery process, and pollutants would be removed with the by-products or incinerated with the coke oven gas.

The Houston plant of Armco, Inc., used a negative-pressure system to control emissions from three tar-collecting tanks. The system was installed between 1976 and 1977 and was operated without difficulty until the coke battery shut down in 1981. A simplified schematic of the system is shown in Figure 4-9. Vent lines on each of the horizontal tanks were 10 cm (4 in.) in diameter and were connected to a common vent line that was 15 cm (6-in.) in diameter. The 15-cm common vent was connected to the 91-cm (36-in.) suction main at the primary coolers where the normal operating pressure was -200 to -300 mm of water. Atmospheric vents, three-way valves, and steam-out connections were installed at each tank, and all of the vent lines were steam traced and insulated.[1]

Armco personnel indicated no problems with the negative pressure system but expressed reservations about the potential for oxygen infiltration and the resulting explosion hazard.[1] For example, if a significantly large leak developed in the tank or if the atmospheric vent were inadvertently left open, air could mix with the coke oven gas in the main. Normally the coke oven gas is maintained above its upper explosive limit; however, if a significant quantity of air were introduced, the coke oven gas might be between the upper and lower explosive limits. This would result in an explosive mixture exposed to continuously arcing tar precipitators located downstream of the exhausters. The operator's preference would have been to blanket these tar-collecting tanks with positive-pressure gas from the collecting main.[1]

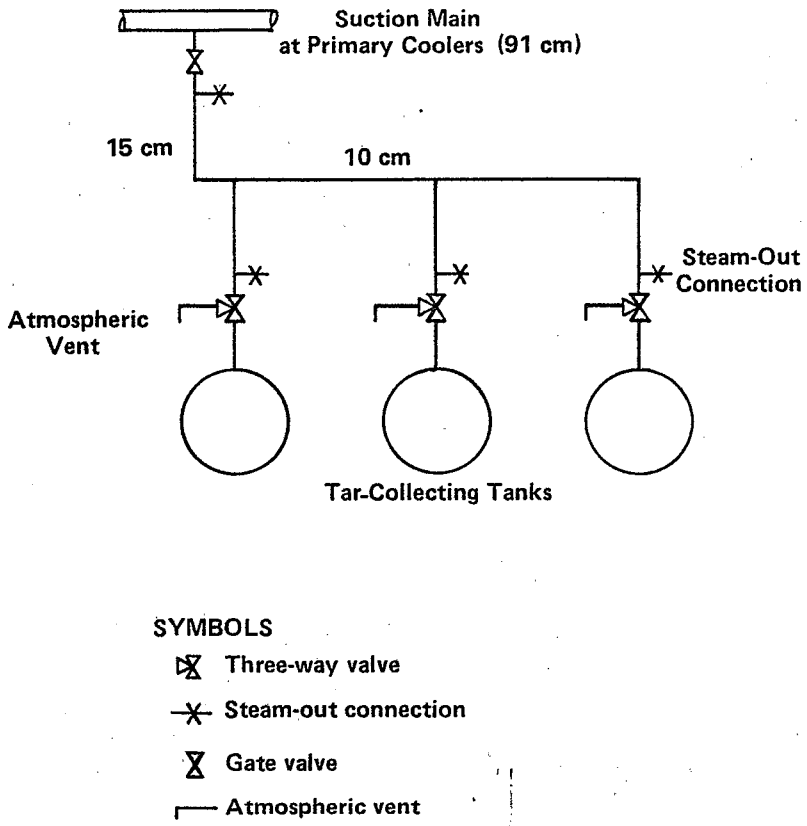

Figure 4-9. Negative-pressure system from tar-collecting tanks to suction main.[1]

Many industry commenters have expressed concern about the safety hazard associated with negative-pressure systems. However, the use of negative pressure on tanks is not unusual. For example, every coke plant has a primary cooler, which is in effect a large tank, and each primary cooler operates at a negative pressure. The concern is not the existence of negative pressure in the tank, but rather that the tank be designed for safe operation under negative pressures. The choice of a positive- or negative-pressure system is probably best made by the operator who must consider the condition and operation of a specific vessel, the costs, and the safety aspects of each system. The control efficiency of a negative-pressure control system is analogous to that of positive-pressure systems, which is approximately 98 to 99 percent.

4.7.2 Vapor Condensation

Although vapor condensation is not typically used for air pollution sources at by-product plants, benzene vapors that escape from storage tanks and process vents conceptually can be recovered with a condenser. It is not anticipated that many of the by-product plant benzene sources will be controlled through vapor condensation because condensation is only moderately effective, and supplemental systems such as carbon adsorption would be required for the 98+ percent control achievable with other control techniques.

Two types of condensers are shown in Figures 4-10 and 4-11. Figure 4-10 shows a simple surface condenser, and Figure 4-11 illustrates a two-state condenser that can be operated at a lower temperature and consequently a higher control efficiency.

Condensation occurs when the condensible's partial pressure and vapor pressure are equal. Removal efficiencies depend on the inlet concentrations of condensibles. When the gas is saturated with hydrocarbons; e.g., light-oil condenser vent gas, refrigeration up to -73° C may yield removal efficiencies up to 96 percent.[7] Complete condensation is not possible because performance is limited by the equilibrium partial pressure of the vapor stream. Consequently, condensers often are used in combination with other control equipment such as incinerators, carbon adsorption units, or absorption units.

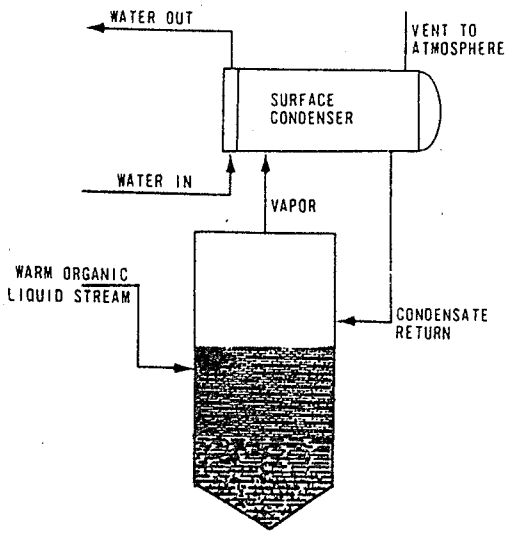

Figure 4-10. Surface condenser unit used on a tank handling warm volatile, organic materials.[16]

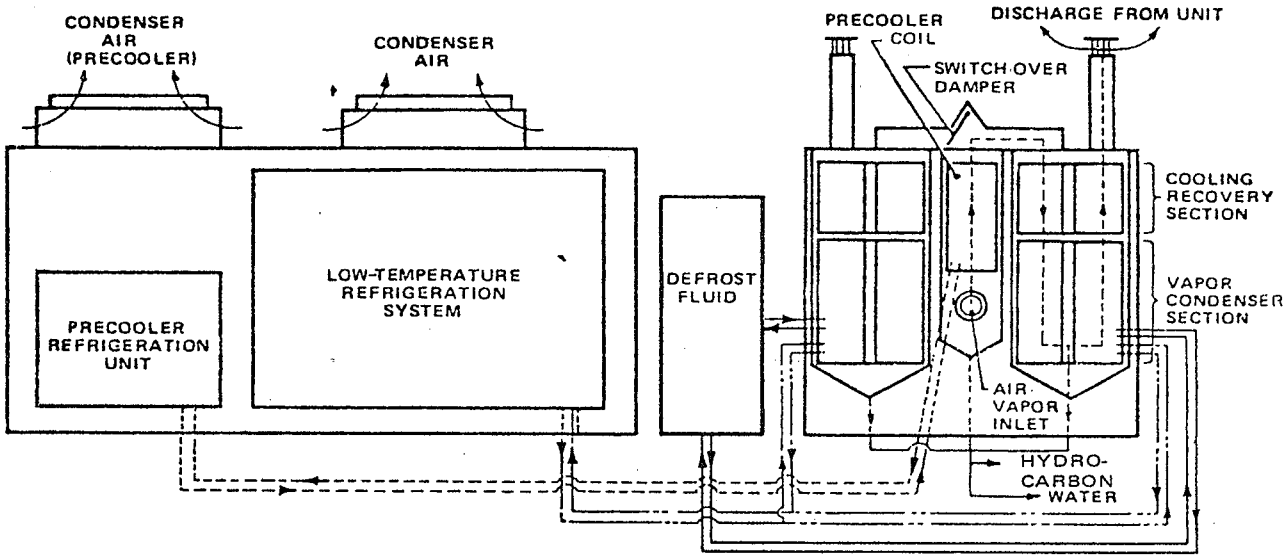

Figure 4-11. Refrigeration vapor recovery unit.[17]

The presence of noncondensible gases in storage tanks, sumps, and the tar decanter is a major factor affecting condenser performance when the condenser is applied to these sources. Air or nitrogen can blanket the condenser surface so the added thermal resistance reduces the condensation coefficients up to 50 percent.[16] Factors that often affect condenser performance include sizing (surface area, coolant flow rate, and temperature), variation in vapor temperature and partial pressure, and fouling from particulate matter such as tar or a frozen component. For example, tar and naphthalene are expected in the tar decanter and dewatering emissions. In addition, benzene freezes at 5.5° C; therefore, the condenser must include a means for removing frozen benzene from the condenser if high separation efficiencies are to be obtained by very low operating temperatures.

Benzene vapor can be removed from a vapor stream at an estimated 60-percent efficiency by a surface condenser operating at 7° C, assuming the vapor inlet and outlet are saturated with benzene. This operating temperature prevents freezing of the benzene vapor. A two-stage system that combines a preliminary condenser operating at 6° C, followed by a final condenser operating at -73° C, can increase the overall benzene control efficiency to 99 percent.[18] Benzene and water vapor are collected on the condenser fins and can be removed by reheating to 6° C. An emission level of 10 ppm benzene vapor is possible if the inlet vapor concentration is 1,000 ppm benzene. These systems have not been demonstrated in by-product recovery plants. Because of the presence of both noncondensibles and readily condensible components (e.g., tar, naphthalene) in by-product plant emissions, the control efficiency is expected to be less than that stated above for by-product plant sources.

4.7.3 Adsorption

Hydrocarbons in a gas or vapor may be adsorbed and retained on the surface of a granular solid. Organic vapor recovery by adsorption is used widely by industry, and complete turn-key adsorption systems are available from many manufacturers. Activated carbon is useful for

benzene recovery from moisture-laden by-product plant emissions because it can adsorb organic gases and vapors when water vapor is in the gas stream.[14]

Adsorbers can have fixed, moving, or fluidized beds.[7] The simplest fixed-bed adsorber is a vertical, cylindrical vessel fitted with a perforated supporting carbon screen (see Figure 4-12). The cone-shaped carbon bed allows more surface area for gas contact and accommodates high gas flow rates at a lower pressure drop than does a flat-bed adsorber. If more than one carbon bed in a single unit is used, the beds usually are arranged as shown in Figure 4-13. For a continuous process operation, a minimum of two fixed-bed units in parallel operation is recommended so that one unit is adsorbing while the other is being steam stripped of solvent and regenerated (see Figure 4-14). Moving-bed adsorbers move the adsorbent in and out of the adsorption zone, thus increasing the adsorbent's efficiency. However, disadvantages of this system include wear on moving parts, attrition of the adsorbent, and lower steam utilization efficiency that results from the shorter beds. The fluidized bed adsorber contains a number of shallow fluidized beds where the organic vapor fluidizes the activated adsorbent. A high loading of the solvent into the adsorbent can be maintained in this unit, thus reducing the steam requirements for regeneration. Desorbed material can be vented to the gas main, collected by a condenser, or eliminated by any of the other control techniques discussed in this chapter.

Vacuum regeneration can be used instead of steam regeneration to eliminate the problem of disposal of a wastewater stream created by steam regeneration.[19] In this application, the carbon bed is under a vacuum caused by a liquid ring seal pump. Desorbed organic vapor is condensed by indirect cooling.

When an air vapor mixture is passed over carbon, adsorption is 100 percent at the beginning, but when the retentive capacity (ratio of the weight of the adsorbate retained to the weight of the carbon) is reached, traces of benzene appear in the exit air. In the control of a benzene atmospheric discharge, the adsorption cycle should stop

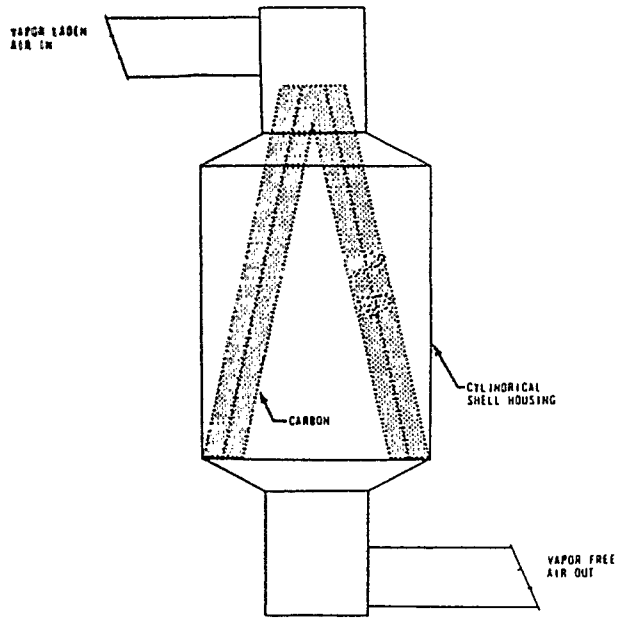

Figure 4-12. Sketch of a vertical adsorber with two cones.[16]

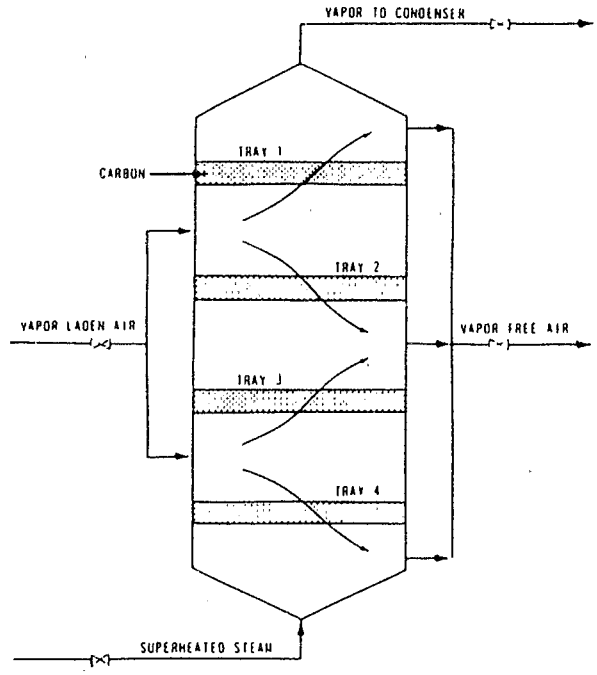

Figure 4-13. Cross-section of an adsorber with four beds of adsorbed carbon.[16]

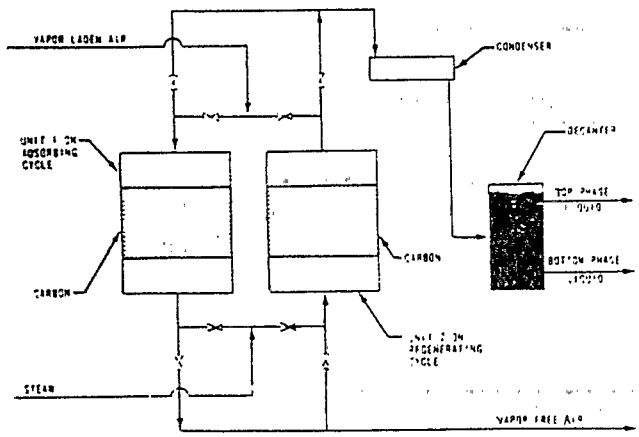

Figure 4-14. Sketch of a two-unit, fixed-bed adsorber.[16]

at the first break point as determined by the detection of benzene discharge. In general, fixed-bed adsorbers are not installed to remove organics when the vapor-laden stream contains less than 3.2 kg of solvent per 1,000 $stdm^3$ of gas (0.2 lb per 1,000 dry $stdft^3$) or when the organic concentration is greater than 25 percent of the lower explosive limit of the mixture.[20]

Carbon adsorption is not known to be used at by-product recovery plants for control of vapor emissions. For vapor emissions from light-oil or benzene storage tanks, the technology transfer should be straightforward. Other by-product emission streams containing tar and naphthalene may not be suitable candidates for technology transfer because of potential fouling and regeneration difficulties.

4.7.4 Absorption

The application of a wash-oil scrubber to absorb benzene from vented vapors was discussed in Subsection 4.4. This subsection discusses alternative absorption systems that have not been demonstrated in by-product recovery plants. These systems are candidates for technology transfer and offer alternative techniques that may achieve a result similar to the wash-oil scrubber. In general, the factors discussed in Subsection 4.4 that affect control efficiency of absorption are applicable here and will not be repeated.

The discussion of wash-oil scrubbers was based primarily on an unpacked scrubber with a spray of wash oil. The gas-liquid contact in other scrubber designs has been accomplished by several types of equipment, including packed towers (see Figure 4-15), spray towers, bubble cap tray towers (see Figure 4-16), jet scrubbers, and venturi absorbers (see Figure 4-17). The majority of industrial applications absorb gas with a packed or plate tower instead of an agitated vessel (gas dispersed by a sparger system into a liquid-filled vessel), spray chamber, or venturi scrubber. Collecting efficiencies depend on the absorber type and scrubbing liquor.[16]

For emission streams that would not foul the packing, these scrubber designs could provide a higher control efficiency than would a simple, unpacked spray scrubber. Potential applications in the by-product recovery plant include light-oil and benzene storage tanks.

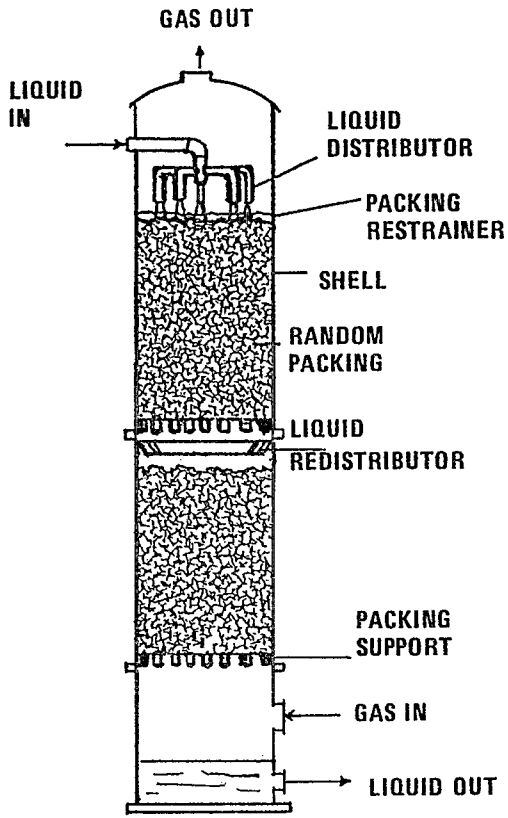

Figure 4-15. Packed tower.[16]

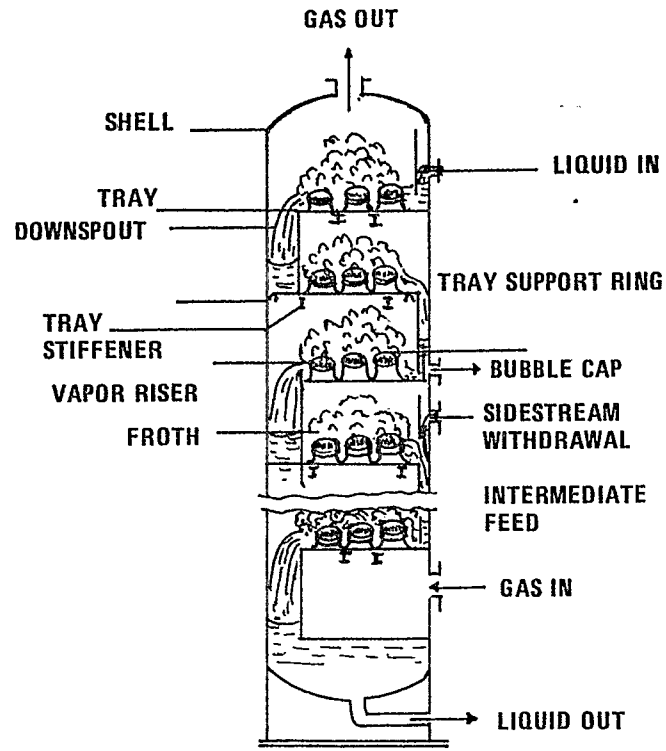

Figure 4-16. Schematic diagram of a bubble cap tray tower.[16]

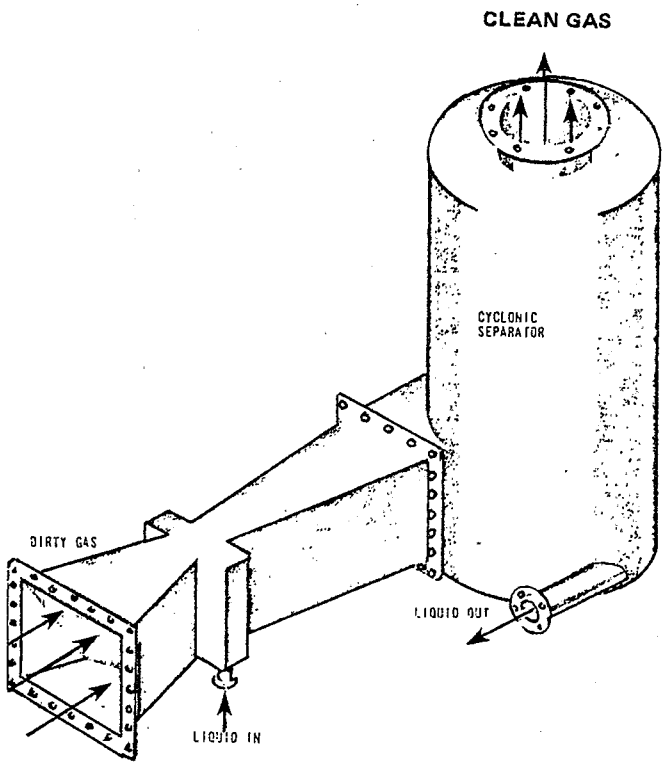

Figure 4-17. Venturi absorber with cyclone-type liquid separator (Chemical Construction Corp., New York, N.Y.).[16]

Another control option is to combine absorption with another control technique. The Vapor Control Company of Houston, Texas, markets a unit that can use a combination of absorption and refrigeration for benzene removal. The liquid absorber is chilled and contacts the vapor steam in a countercurrent packed scrubber. The system would strip the benzene in a regenerator, using a heat exchanger to reduce energy requirements. Levels of hydrocarbon vapors as low as 1,000 ppmv[21] can be obtained in the exit gas, which would provide 99 percent removal of benzene if the inlet gas contained 100,000 ppmv benzene. The only by-product plant source where benzene concentrations of this magnitude were measured is the light-oil condenser vent. In addition, pure benzene storage tanks would have an equilibrium vapor pressure of 130,000 ppmv at 26° C.

4.7.5 Vapor Destruction

The discussion of gas blanketing in Subsection 4.2 included the use of the coke oven gas combustion system for vapor destruction. If the coke plant operator chooses not to use the existing combustion system, an incineration device may be retrofitted for vapor destruction.

A thermal afterburner can be installed to incinerate benzene vapors. The process exhaust system or a blower delivers the organic vapor stream to a refractory-lined burner area. The gases are mixed thoroughly with the burner flames and are passed through the remaining part of the chamber where combustion is completed.[7] This technology has been demonstrated for gasoline vapors and has been tested for benzene vapors.[17] One significant advantage is that a wide range of hydrocarbons can be destroyed; a disadvantage is that potentially valuable compounds are not recovered. However, the fuel value of the hydrocarbons is recovered when heat recovery is practiced.

The major factors affecting afterburner performance are residence time to complete combustion, temperature, and vapor velocity. A minimum residence time of 0.3 to 0.5 s is recommended with vapor velocities of 7.6 to 16.2 m/s to ensure good mixing without quenching the flame. The required discharge temperature varies depending on the organic compound, but it is usually between 538° to 816° C.[16] If

combustion is inhibited by low temperature, low residence time, or poor mixing, carbon monoxide, aldehydes, and other products of incomplete combustion result. Maximum efficiency occurs when all combustible matter passes through the burner at the proper temperature.[7]

Properly designed and operated thermal afterburners usually achieve organic vapor removal efficiencies in excess of 95 percent, and efficiencies of up to 99 percent have been reported for gasoline vapors.[7 8] In general, efficiency improves with increasing operating temperature, flame contact, and residence time. An afterburner rarely attains 90 percent efficiency in removing combustibles below 700° C if there is residual carbon monoxide.[16] Thermal incineration of benzene vapors at temperatures of 760° to 816° C reportedly can limit benzene emissions in the tail gas to as little as 10 ppmv.[19]

4.7.6 Vapor Balance Systems

A vapor balance system uses a variable vapor space to contain the vapors produced in storage tanks. For example, the vents from product storage tanks with similar products can be combined into a vapor reservoir tank. The vapor reservoir tank can be either a lifter-roof type or an internal diaphragm type that accumulates displaced vapors.[16] When liquid is pumped into a storage tank, the displaced vapors are collected in the vapor reservoir by increasing the vapor space in the reservoir (i.e., the roof is lifted or the diaphragm is raised). If the pressure limitations of the storage tank and vapor reservoir are exceeded, the vapors are vented through a pressure relief device. These vented emissions must be recovered or destroyed to obtain a control efficiency analogous to gas blanketing.[16]

The equipment modifications, three-way valves, heat tracing and insulation, and other requirements for gas blanketing would also be required for a vapor balance system. The emission sources must be enclosed to accept the slight, positive pressure of the system. If provision is made to handle excessive vapors that exceed the capacity of the balance system, a control efficiency equal to that of gas blanketing could be obtained. In a by-product plant, the excess

vapors could be returned to the by-product recovery process or to the gas combustion system. No details are available on the use of vapor balance systems in by-product recovery plants.

4.8 CONTROLS FOR FUGITIVE EMISSIONS FROM EQUIPMENT COMPONENTS

In Chapter 3, fugitive emissions from leaking process equipment are discussed. These equipment items include valves, pumps, exhausters, open-ended lines, sampling systems, safety relief valves, and flanges. Techniques for controlling emissions from these sources include leak detection and repair programs and equipment specifications. In some cases, the techniques for controlling these emissions in by-product recovery plants are based on transfer of control technology as applied to related industries, such as petroleum refineries and chemical plants. This approach is possible because the related industries use similar types of equipment. There may be differences between by-product recovery plants and related industries in average line temperatures, product composition, and other parameters. However, these differences do not significantly influence the applicability of the techniques used in controlling the fugitive emissions.

The major reference for the following discussions is the preliminary draft of the background information document (BID) for volatile organic compounds (VOC's) in the petroleum refinery industry.[22] When a reference number appears in the title of a particular subsection, the entire discussion in that subsection is attributed to that reference.

4.8.1 Leak Detection and Repair Methods[22]

Leak detection and repair methods can be applied in order to reduce fugitive emissions from by-product plant sources. Leak detection methods are used to identify equipment components that are emitting significant amounts of benzene. Emissions from leaking sources may be reduced by three general methods: repair, modification, or replacement of the source.

4.8.1.1 Leak Detection Techniques. Various monitoring techniques that can be used in a leak detection program include individual component surveys, unit area (walk-through) surveys, and fixed-point monitoring systems. These emission detection methods would yield qualitative indications of leaks.

4.8.1.1.1 Individual component survey.[22] Each fugitive emission source (pump, valve, compressor, etc.) is checked for leakage in an individual component survey. The source may be checked for leakage by visual, audible, olfactory, soap solution, or instrument techniques. Visual methods are good for locating liquid leaks, especially pump seal failures. High-pressure leaks may be detected when the escaping vapors are audible, and leaks of odorous materials may be detected by smell. Predominant industry practices are leak detection by visual, audible, and olfactory methods. However, in many instances, even very large leaks are not detected by these methods.

Applying a soap solution on equipment components is one individual survey method. If bubbles are seen in the soap solution, a leak from the component is indicated. The method requires that the observer subjectively determine the rate of leakage based on formation of soap bubbles over a specified time period. The method is not appropriate for very hot sources, although ethylene glycol can be added to the soap solution to extend the temperature range. This method is also not suited for moving shafts on pumps or compressors, since the motion of the shaft may cause entrainment of air in the soap solution and indicate a leak when none is present. In addition, the method cannot generally be applied to open sources such as relief valves or vents without additional equipment.

The use of portable hydrocarbon detection instruments is the best known individual survey method for identifying leaks of VOC's from equipment components because it is applicable to all types of sources. The instrument is used to sample and analyze the air in close proximity to the potential leak surface by traversing the sampling probe tip over the entire area where leaks may occur. This sampling traverse is called "monitoring" in subsequent descriptions. A measure of the hydrocarbon concentration of the sampled air is displayed in the instrument meter.

4.8.1.1.2 Unit area survey.[22] A unit area or walk-through survey entails measuring the ambient concentration within a given distance; e.g., one meter, of all equipment located on ground levels

and other accessible levels within a processing area. These measurements are performed with a portable VOC detection instrument utilizing a strip chart recorder.

The instrument operator walks a predetermined path to assure total available coverage of a unit on both the upwind and downwind sides of the equipment, noting on the chart record the location in a unit where any elevated VOC concentrations are detected. If an elevated VOC concentration is recorded, the components in that area can be screened individually to locate the specific leaking equipment.

It is estimated that 50 percent of all significant leaks in a unit are detected by the walk-through survey, provided that there are only a few pieces of leaking equipment, thus reducing the VOC background concentration sufficiently to allow for reliable detection.

The major advantages of the unit area survey are that leaks from accessible leak sources near the ground can be located quickly and that the leak detection manpower requirements can be lower than those for the individual component survey. Some of the shortcomings of this method are that VOC emissions from adjacent units can cause false leak indications; high or intermittent winds (local meteorological conditions) can increase dispersion of VOC, causing leaks to be undetected; elevated equipment leaks may not be detected; and additional effort is necessary to locate the specific leaking equipment, i.e., individual checks in areas where high concentrations are found.

4.8.1.1.3 Fixed-point monitors.[22] This method consists of placing several automatic hydrocarbon sampling and analysis instruments at various locations in the process unit. The instruments may sample the ambient air intermittently or continuously. Elevated hydrocarbon concentrations indicate a leaking component. As in the walk-through method, an individual component survey is required to identify the specific leaking component in the area. Leaks from adjacent units and meteorological conditions may affect the results obtained. The efficiency of this method is not well established, but it has been estimated that 33 percent of the number of leaks identified by a complete individual component survey could be located by

fixed-point monitors. These leaks would be detected sooner by fixed-point monitors than by use of portable monitors, because the fixed-point monitors operate semi-continuously. Fixed-point monitors are more expensive, multiple units may be required, and the portable instrument is also required to locate the specific leaking component. Calibration and maintenance costs may be higher. Fixed-point monitors have been used to detect emissions of hazardous or toxic substances (such as vinylchloride) as well as potentially explosive conditions. Fixed-point monitors have an advantage in these cases, since a particular compound can be selected as the sampling criterion.

4.8.1.1.4 Visual inspections.[22] Visual inspections can be performed for any of the leak detection techniques discussed above to detect evidence of liquid leakage from plant equipment. When such evidence is observed, the operator can use a portable VOC detection instrument to measure the VOC concentration of the source. In a specific application, visual inspections can be used to detect the failure of the outer seal of a pump's dual mechanical seal system. Observation of liquid leaking along the shaft indicates an outer seal failure and signals the need for seal repair.

4.8.1.2 Repair Techniques.[22] When leaks are located by the leak detection methods described in this subsection, the leaking component can then be repaired or replaced. Many components can be serviced on-line. This is generally regarded as routine maintenance to keep operating equipment functioning properly. Equipment failure, as indicated by a leak not eliminated by servicing, requires isolation of the faulty equipment for either repair or replacement.

4.8.1.2.1 Pumps. Most critical service process pumps are backed up with a spare so that they can be isolated for repair. Of those pumps that are not backed up with spares, some can be corrected by on-line repairs (e.g., tightening the packing). However, most leaks that need correction require that the pump be removed from service for seal repair.

4.8.1.2.2 Valves. Most valve leaks can be reduced on-line by tightening the packing gland for valves with packed seals or by lubrication

for plug valves, for example. Various valve maintenance programs have been performed by EPA and refinery personnel. Union Oil Company and Shell Oil Company each conducted studies at their California refineries on maintenance of leaking valves. Emission rates were estimated based on screening value correlations. EPA studied the effects of maintenance on fugitive emissions from valves at four refineries. Each valve was sampled to determine emission rates before and after maintenance to evaluate emission reductions. In a separate study, EPA examined maintenance effectiveness on block valves at an ethylene production unit based on screening valves alone. In a subsequent study, routine on-line maintenance achieved a 70-percent reduction in mass emissions.

In each of these studies, maintenance consisted of routine procedures, such as adjusting the packing gland while the valve was in service. In general, the programs concluded that (1) a reduction in emissions may be obtained by performing maintenance on valves with screening values above 10,000 ppmv; (2) for valves with screening valves (before maintenance) below 10,000 ppmv, a slight reduction in emissions after maintenance may result; moreover, emissions from these valves may increase; and (3) directed maintenance (emissions measured during repair until VOC concentration drops to a specified level) is preferable to undirected maintenance (no measurement of the effect of repair).

Valves that need to be repacked or replaced to reduce leakage must be isolated from the process. While control valves can usually be isolated, block valves, which are used to isolate or bypass equipment, normally cannot be isolated. One refiner estimates that 10 percent of the block valves can be isolated.

When leaking valves can be corrected on-line, repair servicing can be done immediately after detection of the leak. When the leaks can be corrected only by a total or partial shutdown, the temporary emissions could be larger than the continuous emissions that would result from not shutting down the unit until it was time for a shutdown for other reasons. Simple maintenance procedures, such as packing gland tightening and grease injection, can be applied to reduce emissions

from leaking valves until a shutdown is scheduled. Leaks that cannot be repaired on-line can be repaired by drilling into the valve housing and injecting a sealing compound. This practice is growing in acceptance, especially for safety concerns.

4.8.1.2.3 Flanges. One refinery field study noted that most flange leaks could be sealed effectively on-line by simply tightening the flange bolts. For a flange leak that requires off-line gasket seal replacement, a total or partial shutdown of the unit would probably be required because most flanges cannot be isolated.

For many of these cases, temporary flange repair methods can be used. Unless a leak is major and cannot be temporarily corrected, the temporary emission from shutting down a unit would probably be larger than the continuous emissions that would result from not shutting down the unit until time for a shutdown for other reasons.

4.8.1.2.4 Relief valves. In general, relief valves that leak must be removed in order to repair the leak. In some cases of improper reseating, manual release of the valve may improve the seat seal. In order to remove the relief valve without shutting down the process, it is necessary to install a block valve on a three-way valve upstream of the relief valve if the relief valve system is to be isolated and repaired on-line without shutting down the unit.

Flares can also be used as a means of handling emergency releases from various processes within the plant. According to the current knowledge of flare design, the best available flare design or state-of-the-art flare design is the smokeless flare. Smoking flares are environmentally less desirable because they emit particulates.

There are a number of techniques currently in use which help flares achieve smokeless operation. One technique involves the use of staged elevated flare systems, where a small diameter flare is operated in tandem with a large diameter flare. The system is designed such that the small flare takes the continuous low flow releases and the larger flare accepts emergency releases. A second technique involves the use of a small, separate conveyance line to the flare tip in order to maintain a high exit velocity for the continuous low pressure gas

flow. A third technique, sometimes used in conjunction with either of the above techniques, involves the use of continuous flare gas recovery. In the third technique, a compressor is used to recover the continuously generated flare gas "base load." The compressor is sized to handle the "base load," and any excess gas is flared. These techniques can be used to help provide smokeless operation of a flare which is used to reduce fugitive emissions of VOC (including benzene) that are captured and transported by closed vent systems.

In recent tests, smokeless steam-assisted flares, smokeless air-assisted flares, and smokeless flares with no assist were found to be as efficient as enclosed combustion devices in destroying VOC over a broad range of operating conditions if the heat content of the flared gas is maintained above a certain minimum, and the velocity of the gas at the flare tip is maintained below a certain maximum. Based on the test data and a comparison of vent stream characteristics between the test data and equipment leaking VOC, EPA believes that the destruction efficiency of smokeless flares would be at least 98 percent.

Enclosed combustion devices can be designed and operated to achieve VOC (including benzene) emission reductions of at least 98 percent. Vapor recovery systems can be readily designed and operated to achieve VOC (including benzene) emission reductions of at least 95 percent. Existing enclosed combustion devices and vapor recovery systems may not achieve the VOC emission reduction efficiencies that new control devices achieve. However, existing control devices achieve a VOC reduction efficiency of at least 95 percent.

An emission reduction efficiency of 95 percent is considered appropriate for control devices used to reduce equipment leaks of VOC, including benzene. The use of enclosed combustion devices and flares achieving a 98 percent emission reduction is too costly to add to a source solely to control VOC leaks in light of the presence of existing control devices that can achieve 95 percent control. Because flares with no assist, steam, or air assist can achieve at least 98 percent VOC (including benzene) reduction efficiency if designed for smokeless operation and existing control devices, such as enclosed combustion

devices and vapor recovery systems, will achieve at least 95 percent VOC (including benzene) reduction efficiency, a VOC reduction efficiency of 95 percent is appropriate.

Recommended design and operation requirements for flares include smokeless operation and the presence of a flame. The presence of a flame can be ensured by monitoring the flare's pilot light with a thermocouple or some other heat sensor connected to an alarm. Smokeless operation of the flare can be ensured through visible emission requirements. Many plants currently comply with State limits similar to this requirement. In addition, only steam-assisted flares, air-assisted flares, or flares with no assist could be used. Steam-assisted flares would have to be operated with exit velocities less than 18 m/sec (60 ft/sec), under standard conditions, combusting gases with heating values of 11.2 MJ/scm (300 Btu/scf) or greater. Air-assisted flares would have to be operated with heating values of 11.2 MJ/scm (300 Btu/scf) or greater and with exit velocities equal to, or less than, the actual velocity. The actual velocity would be calculated by dividing the gas flow (in standard units), by the unobstructed (free) cross section area of the flare tip. Flares operated without assist would have to be operated with exit velocities less than 18 m/sec (60 ft/sec), under standard conditions, combusting gases with heating values of 7.4 MJ/scm (200 Btu/ scf) or greater. For enclosed combustion devices that do not use catalysts to aid in combustion of organic vapor streams, provisions for a minimum vapor residence time of 0.75 seconds at a minimum temperature of 816° C are considered equivalent to at least a 95 percent emission reduction efficiency.

4.8.1.2.5 Exhausters. Leaks from exhauster seals may be reduced by the same repair procedure that was described for pumps (i.e., tightening the packing). Other types of seals, such as a labyrinth seal, may require that the exhauster be taken out of service for repair. Coke plants have spare exhauster capacity because of the importance of continuous exhauster operation to the safe and efficient operation of both the coke battery and the by-product recovery plant. The spare exhauster capacity could be used while the leaking exhauster is repaired without shutdown of the gas removal system.

4.8.1.3 Emission Control Effectiveness of Leak Detection and Repair.[22] The control efficiency achieved by a leak detection and repair program is dependent on several factors, including the leak definition, inspection interval, and the allowable repair time.

4.8.1.3.1 Definition of a leak. The first step in developing a monitoring plan for fugitive VOC emissions is to define an instrument meter reading that is indicative of an equipment leak. The choice of the meter reading for defining a leak is influenced by several considerations. The percent of total mass emissions that can potentially be controlled by the leak detection and repair program can be affected by varying the leak definition. Table 4-4 gives the percent of total mass emissions affected at various leak definitions for a number of component types. From the table, it can be seen that, in general, a low leak definition results in larger potential emission reductions.

Other considerations are more source specific. For valves, the selection of an active level for defining a leak is a tradeoff between the desire to locate all significant leaks and to ensure that emission reductions are possible through maintenance. Although test data show that some valves with meter readings less than 10,000 ppm have significant emissions rates, most of the major emitters have meter readings greater than 10,000 ppm. Maintenance programs on valves have shown that emission reductions are possible through on-line repair for essentially all valves with nonzero meter readings. There are, however, cases where on-line repair attempts result in an increased emission rate. The increased emissions from such a source could be greater than the emission reduction if maintenance is attempted on low leak valves. These valves should, however, be able to achieve essentially 100 percent emission reduction through off-line repair. Generally, the emission rates from valves with meter readings greater than or equal to 10,000 ppm are significant enough so that an overall emission reduction is likely for a leak detection and repair program with a 10,000-ppm leak definition. Therefore, 10,000 ppm seems to be the most reasonable leak definition to direct maintenance effort at the bulk of the valve emissions while still having confidence that an overall emission reduction will result.

For pump and exhauster seals, the rationale for selection of an action level is different because the cause of leakage is different. As opposed to valves, which generally have zero leakage, most seals leak to a certain extent while operating normally. These seals would tend to have low instrument meter readings. With time, however, as the seal begins to wear, the concentration and emission rate are likely to increase. At any time, catastrophic seal failure can occur with a large increase in the instrument meter reading and emission rate. As shown in Table 4-4, over 90 percent of the emissions from compressor seals and pump seals are from sources with instrument meter readings greater than or equal to 10,000 ppm. Because properly designed, installed, and operated seals should have low instrument meter readings and because the bulk of the pump and exhauster seal emissions are from seals that have worn out or failed such that they have a concentration equal to or greater than 10,000 ppm, this level was chosen as a reasonable action level.

4.8.1.3.2 Inspection interval. The length of time between inspections should depend on the expected occurrence and recurrence of leaks after a piece of equipment has been checked and/or repaired. This interval can be related to the type of equipment and service conditions, and different intervals can be specified for different pieces of equipment. Monitoring may be scheduled on an annual, quarterly, monthly, or weekly basis. The choice of the interval affects the emission reduction achievable because more frequent inspection intervals will result in earlier detection and repair of leaking sources.

4.8.1.3.3 Allowable repair time. If a leak is detected, the equipment should be repaired within a certain time period. The allowable repair time should allow the plant operator sufficient time to obtain necessary repair parts and maintain some degree of flexibility in overall plant maintenance scheduling. The determination of this allowable repair time will affect emission reductions by influencing the length of time that leaking sources are allowed to continue to emit.

4.8.1.3.4 Estimation of reduction efficiency for valves and pumps.[22 23] A mathematical model was developed to approximate the behavior of fugitive emissions from equipment. The leak detection and repair (LDAR) model can be used to evaluate programs requiring leak detection and repair of leaking sources at regular intervals (1 month, 3 months, 6 months, 9 months, or 1 year). The model also includes an option to evaluate a program requiring quarterly inspection of all valves, attempted repair of leaking valves, reinspection of repaired valves monthly until they are determined not to be leaking for two successive months, and repair of leaking valves including those that could not be repaired within 15 days during a process turnaround. In addition, the model allows a variable input for repair effectiveness, process unit turnaround frequency, leak occurrence, and leak frequency. The model can also incorporate the uncertainty of the inputs and calculate approximate confidence intervals. A description of the methodology and data used to develop the LDAR model can be found in Reference 23.

For leaks in by-product recovery plants, the emission factors and percent of initial leakers shown in Table 3-6 were used as inputs to the LDAR model. The overall emission reduction of the leak detection and repair program for various monitoring intervals was estimated with the LDAR model and is shown in Table 4-5.

4.8.1.3.5 Estimation of reduction efficiency for safety relief devices and exhausters.[22] The estimated reduction efficiencies for safety relief devices and exhausters are given in Table 4-6 and are based on a leak definition of 10,000 ppmv. The first column in Table 4-6 represents the percentage of total mass emissions that can be expected from these sources with concentrations at the source greater than 10,000 ppmv. If a leak detection and repair program resulted in repair of all such sources to 0 ppmv, elimination of all sources over 10,000 ppmv between inspections, and instantaneous repair of those sources found at each inspection, then emissions could be expected to be reduced by the amount represented by the first column in Table 4-6 (see Item A). However, because these conditions are not

TABLE 4-5. PERCENT EMISSION REDUCTION OF LEAK DETECTION AND REPAIR PROGRAM FOR VALVES AND PUMPS[a]

Source	Inspection interval		
	Yearly	Quarterly	Monthly
Valves	21.2	62.7	72.5
Pumps	21.8	70.9	83.3

[a]From LDAR model. Assumes a 15-day allowable repair time and a 10,000-ppmv leak definition.

TABLE 4-6. PERCENT EMISSION REDUCTION OF LEAK DETECTION AND REPAIR PROGRAM FOR SAFETY RELIEF VALVES AND EXHAUSTERS

Source	Factor A[a]	Factor B for inspection interval[b]		Factor C[c]	Factor D[d]	Factor E for inspection interval[e]		Percent reduction[f] for inspection interval	
		Quarterly	Monthly			Quarterly	Monthly	Quarterly	Monthly
Safety relief valves	0.74	0.90	0.95	0.98	0.98	0.69	0.77	44	52
Exhausters	0.91	0.90	0.95	0.98	0.98	0.69	0.77	55	64

[a]Fraction of total emissions from sources with VOC concentrations ≧10,000 ppmv.

[b]Leak occurrence and recurrence correction factor. Values are assumed and account for sources that start to leak between inspections (occurrence); for sources that are found to be leaking, are repaired, and start to leak again before the next inspection (recurrence); and for leaking sources that could not be repaired.

[c]Noninstantaneous repair correction factor. Accounts for emissions that occur between detection of leak and subsequent repair. Assumes a 15-day repair time.

[d]Imperfect repair correction factor. Accounts for the fact that some sources that are repaired are not reduced to zero.

[e]Ratio of LDAR/ABCD approach for valves.

[f]Percent reduction (control efficiency) = A × B × C × D × E × 100.

met in practice, the fraction of emissions from sources with concentrations over 10,000 ppmv represents the theoretical maximum reduction efficiency. The approach to estimation of emission reduction presented here is to reduce this theoretical maximum control efficiency by accounting quantitatively for those factors outlined above.

This approach can be expressed mathematically by the following equation:[24]

$$\text{Reduction efficiency} = A \times B \times C \times D,$$

where:

A = Theoretical maximum control efficiency = fraction of total mass emissions from sources with concentrations greater than 10,000 ppmv.

B = Leak occurrence and recurrence correction factor = correction factor to account for sources that start to leak between inspections (occurrence); for sources that are found to be leaking, are repaired, and start to leak again before the next inspection (recurrence); and for known leaks that could not be repaired.

C = Noninstantaneous repair correction factor = correction factor to account for emissions that occur between detection of a leak and subsequent repair, since repair is not instantaneous.

D = Imperfect repair correction factor = correction factor to account for the fact that some sources that are repaired are not reduced to zero. For computational purposes, all sources that are repaired are assumed to be reduced to an emission level equivalent to a concentration of 1,000 ppmv.

An implicit assumption here is that the leak detection program detects all of the sources with concentrations greater than 10,000 ppmv that are present at the time of the inspection. As an example of this technique, Table 4-6 gives values for the "B," "C," and "D" correction factors for various possible inspection intervals and allowable repair times.

Recent results of the LDAR model indicate that the ABCD approach slightly overestimates the emission reduction achieved by the inspection program. The emission reduction for valves in gas service was estimated

using both approaches and revealed a ratio of the LDAR/ABCD emission reduction of 0.69 for quarterly monitoring and 0.77 for monthly monitoring. To put all of the emission reductions on approximately the same basis (i.e., LDAR model), the percent reductions for safety relief valves and exhausters in Table 4-6 were adjusted by the LDAR/ABCD ratio, which is listed as Factor E in the table. For safety relief valves, the resulting emission reductions are 44 and 52 percent for quarterly and monthly monitoring, respectively. For exhausters, the corrected emission reductions are 55 and 64 percent for quarterly and monthly monitoring, respectively.

4.8.2 Preventive Programs[22]

An alternative approach to controlling fugitive emissions from by-product plant operations is to replace components with leakless equipment. This approach is referred to as a preventive program. This subsection will discuss the kinds of equipment that could be applied in such a program and the advantages and disadvantages of this equipment.

4.8.2.1 Pumps. As discussed in Chapter 3, pumps can be potential fugitive emission sources because of leakage through the drive-shaft sealing mechanism. This kind of leakage can be reduced to a negligible level through the installation of improved shaft sealing mechanisms, such as dual mechanical seals, or it can be eliminated entirely by installing sealless pumps. Another control option is to enclose the seal area, collect the emissions, and transport the emissions to a control device or return them to the process.

4.8.2.1.1 Dual mechanical seals. As discussed in Chapter 3, dual mechanical seals consist of two mechanical sealing elements usually arranged in either a back-to-back or a tandem configuration. In both configurations a nonpolluting barrier fluid circulates between the seals. The barrier fluid system may be a circulating system, or it may rely on convection to circulate fluid within the system. While the barrier fluid's main function is to keep the pumped fluid away from the environment, it can serve other functions as well. A barrier fluid can provide temperature control in the stuffing box. It can

also protect the pump seals from the atmosphere, as in the case of pumping easily oxidizable materials that form abrasive oxides or polymers upon exposure to air. A wide variety of fluids can be used as barrier fluids. Some of the more common ones that have been used are water (or steam), glycols, methanol, oil, and heat transfer fluid. In cases in which product contamination cannot be tolerated, it may also be possible to use a clean product, a product additive, or a product diluent.

Emissions from barrier fluid degassing vents can be controlled by a closed-vent system, which consists of piping, and, if necessary, flow-inducing devices to transport the degassing emissions to a control device, such as a process heater, or vapor recovery system. Control effectiveness of a dual mechanical seal and closed-vent system is dependent on the effectiveness of the control device used and the frequency of seal failure. Failure of both the inner and outer seals can result in relatively large emissions at the seal area of the pump. Pressure monitoring of the barrier fluid may be used in order to detect failure of the seals. In addition, visual inspection of the seal area also can be effective for detecting failure of the outer seals.

An alternative to venting the barrier fluid to a control device is to operate the barrier fluid system such that the barrier fluid pressure is greater than the stuffing box pressure. For dual mechanical seals in a back-to-back arrangement, the higher pressure of the barrier fluid will result in some leakage of the barrier fluid across the inboard face of the seal into the stuffing box and subsequently into the pumped liquid. The pressure of the barrier fluid prevents outward leakage from the process stream and any leakage will be from the barrier fluid into the process stream. Barrier fluid going across the outboard face of the seal will exit to the atmosphere. Therefore, the barrier fluid must be compatible with the process liquid as well as with the environment. This control option is not suitable for dual mechanical seals in a tandem arrangement. In the tandem arrangement, the barrier fluid is at a pressure lower than that in the stuffing

box; therefore, any leakage from the stuffing box will be into the barrier fluid. Control of emissions from the barrier fluid's reservoir for seals in the tandem arrangement must provide for the collection of the emissions and transport to a control device.

Another control option for pumps is to purge the barrier fluid to an appropriate by-product recovery process. The barrier fluid may be circulated through the seal and transported to an appropriate point in the process for removal or destruction of any benzene in the barrier fluid. Alternatively, the barrier fluid may be recirculated through a closed system with removal of a slipstream of the barrier fluid to the process to prevent accumulation of benzene in the fluid. For either case, clean barrier fluid must be added to the system on a continuous basis to replace any barrier fluid that is removed.

Dual mechanical seals are used in many by-product plant process applications; however, there are some conditions that preclude the use of dual mechanical seals. Their maximum service temperature is usually limited to less than 260° C, and mechanical seals cannot be used on pumps with reciprocating shaft motion.

4.8.2.1.2 Sealless pumps. The sealless or canned-motor pump is designed so that the pump casing and rotor housing are interconnected. The impeller, motor rotor, and bearings are completely enclosed and all seals are eliminated. A small portion of process fluid is pumped through the bearings and rotor to provide lubrication and cooling.

Standard single-stage canned-motor pumps are available for flows up to 160 m^3 per second and heads up to 76 m. Two-stage units are also available for heads up to 183 m. Canned-motor pumps are widely used in applications where leakage is a problem.

The main design limitation of these pumps is that only clean process fluids may be pumped without excessive bearing wear. Since the process liquid is the bearing lubricant, abrasive solids cannot be tolerated. Also, there is no potential for retrofitting mechanical or packed seal pumps for sealless operation. Use of these pumps in existing plants would require that existing pumps be replaced.

4.8.2.2 Exhausters. Exhausters can be potential fugitive emission sources because of leakage through the drive-shaft sealing mechanism. This kind of leakage can be reduced to a negligible level through the use of improved shaft-sealing mechanisms, which are analogous to those described for pumps.

Many exhausters have mechanical seals called a labyrinth seal, which may also incorporate a barrier fluid. Control options for this type of system are similar to those described in the previous subsection. For example, emissions from the barrier fluid's reservoir may be piped to a control device or back to the process. The barrier fluid system may be operated at a higher pressure than the stuffing box pressure so that any leakage would be the inward leakage of the barrier fluid. Alternatively, emissions from the reservoir vent may be added back to the process stream. For example, a closed loop from the reservoir vent to the exhauster inlet may be installed to add the emissions back to the coke oven gas.

4.8.2.3 Valves. As in the case of pumps, valves can be sources of fugitive emissions because of leakage through the packing used to isolate process fluids from the atmosphere (see Chapter 3). This source of emissions, however, can be eliminated by isolating the valve stem from the process fluid. Sealed-bellows valves are designed to perform in this manner. The stem in a sealed-bellows valve is isolated from the process fluid by metal bellows. The bellows is generally welded to the bonnet and dish of the valve, thereby isolating the stem.

There are two main disadvantages to these valves. First, they are only available in globe and gate valve configurations. Second, the crevices of the bellows may be subject to corrosion under severe conditions if the bellows alloy is not carefully selected.

The main advantage of these valves is that they can be designed to withstand high temperatures and pressures so that leak-free service can be provided at operating conditions beyond the limits of diaphragm valves.

4.8.2.4 Safety/Relief Valves. A rupture disk can be used upstream of a safety/relief valve so that under normal conditions it seals the system tightly but will break when its set pressure is exceeded, at which time the safety/relief valve will relieve the pressure. The rupture disk installation is arranged to prevent disk fragments from lodging in the valve and preventing the valve from being reseated if the disk ruptures. It is important that no pressure be allowed to build in the pocket between the disk and the safety/relief valve; otherwise, the disk will not function properly. A pressure gauge and bleed valve can be used to prevent pressure buildup. With the use of a pressure gauge, it can be determined whether the disk is properly sealing the system against leaks. It is also necessary to install a block valve or a three-way valve upstream of the rupture disk if the disk/relief valve system is to be isolated and repaired on-line without shutting down the unit.

Use of a rupture disk upstream of a safety/relief valve would eliminate leaks due to improper seating of the relief valve. Also, the disk can extend the life of a safety/relief valve by protecting it against system materials that could be corrosive and thereby cause seal degradation.

Another control option would be to install o-rings in the pressure relief device to improve the sealing mechanism. The o-rings could provide a tighter seat for the metal disk and could alleviate poor seating caused by corrosion or deposits on the metal-to-metal seal. No data are available to estimate the control effectiveness of installing o-ring seals.

A closed-vent system can also be used to collect and dispose of emissions from the relieving or leaking of safety/relief valves. The vent on the relief valve could be connected to a control device or to an appropriate point in the process to recover or to destroy the vented emissions. The efficiency of a closed-vent system would be determined by the control efficiency of the control device that is used to destroy or recover the emissions.

4.8.2.5 Open-Ended Lines.[22] Caps, plugs, and double block and bleed valves are devices for closing off open-ended lines. When installed downstream of an open-ended line, they are effective in preventing leaks through the seat of the valve from reaching atmosphere. In the double block and bleed system, it is important that the upstream valve be closed first. Otherwise, product will remain in the line between the valves, and expansion of this product can cause leakage through the valve stem seals.

The control efficiency will depend on such factors as frequency of valve use, valve seat leakage, and material that may be trapped in the pocket between the valve and cap or plug and lost on removal of the cap or plug. Annual emissions from a leaking open-ended valve are approximately 100 kg.[23] Assuming that open-ended lines are used an average of 10 times per year, that 0.1 kg of trapped organic material is released when the valve is used, and that all of the trapped organics released are emitted to atmosphere, the annual emissions from closed off open-ended lines would be 1 kg. This would be a 99 percent reduction in emissions. Due to the conservative nature of these assumptions, a 100 percent control efficiency has been to estimate the emission reductions of closing off open-ended lines.

4.8.2.6 Closed-Purge Sampling.[22] Emissions from purging sampling lines can be controlled by a closed-purge sampling system, which is designed so that the purged material is returned to the system or sent to a closed disposal system and so that the handling losses are minimized. An example of a closed-purge sampling system is one where the purged material is flushed from a point of higher pressure to one of lower pressure in the system and where sample-line dead space is minimized. Other sampling systems are available that utilize partially evacuated sampling containers and require no line pressure drop, and nonextractive sampling is possible.

Reduction of emissions by applying closed-purge sampling is dependent on many highly variable factors, such as frequency of sampling and amount of purge required before the closed-purge system is applied. For emission calculations, it has been assumed that closed-purge

sampling systems will provide 100 percent control efficiency for the sample purge from uncontrolled sampling systems.

4.9 REFERENCES

1. Branscome, M. R. Trip Report to Armco, Incorporated, Houston, Texas. Research Triangle Institute. Research Triangle Park, NC. March 4, 1982.

2. Branscome, M. R. Trip Report to U.S. Steel Corporation Fairless Hills, Pennsylvania. Research Triangle Institute. Research Triangle Park, NC. March 8, 1982.

3. Allen, C. C. Trip Report to Bethlehem Steel Corporation, Sparrows Point, Maryland. Research Triangle Institute. Research Triangle Park, NC. January 20, 1982.

4. Jablin, R. A., et al. Cost to Control Emission of Benzene from Coke Oven By-Product Plants. R. Jablin & Associates. EPA Contract No. 68-02-3056. February 13, 1979.

5. VanOsdell, D. W., et al. Environmental Assessment of Coke By-Product Recovery Plants. U.S. Environmental Protection Agency. Washington, DC. Publication No. EPA-600/2-79-016. January 1979. 387 p.

6. McGannon, H. E. (ed.). The Making, Shaping, and Treating of Steel. U.S. Steel Corporation. Pittsburgh, PA. 1971. p. 174-175.

7. Control Techniques for Volatile Organic Emissions from Stationary Sources. Office of Air Quality Planning and Standards, U.S. Environmental Protection Agency. Research Triangle Park, NC. Publication No. EPA-450/2-78-022. May 1978.

8. Organic Chemical Manufacturing: Combustion Control Devices. Volume 4. U.S. Environmental Protection Agency. Research Triangle Park, NC. Publication No. EPA-450/3-80-026. December 1980. p. II-3 to II-10.

9. Allen, C. C. Trip Report to Republic Steel Corporation, Cleveland, Ohio. Research Triangle Institute. Research Triangle Park, NC. January 21, 1982.

10. Letter from Lucas, A. W., J&L Steel Corporation, to D. R. Goodwin, U.S. Environmental Protection Agency. August 17, 1979. Response to Section 114 questionnaire "Current and Planned Emission Controls for Coke Oven By-Product Recovery Plants."

11. Lowry, H. H. (ed.). Chemistry of Coal Utilization. Supplementary Volume. New York, John Wiley and Sons, Inc., 1963.

12. Hixon, A. W., and C. E. Scott. Absorption of Gases in Spray Towers. Ind. and Eng. Chem. 27(3):307-314. 1935

13. Wood, J. P., and J. J. Spivey. Methodology for Spray Absorber Design and Performance Assessment: Benzene Removal from Light Oil Storage Tank Surge Vent Gases. Research Triangle Institute. Research Triangle Park, NC. April 27, 1983.

14. Memorandum from Wood, J. P., Research Triangle Institute, to D. W. Coy, Research Triangle Institute. November 14, 1983. 6 pp. Wash-Oil Scrubbers--Guidelines for Equipment Specifications.

15. Benzene Coke Oven By-Product Plants--Emission Test Report, Republic Steel Corporation, Gadsden, Alabama. U.S. Environmental Protection Agency. Research Triangle Park, NC. EMB Report No. 80-BYC-4. March 1981.

16. Air Pollution Engineering Manual. Danielson, John A. (ed.). Office of Air Quality Planning and Standards, U.S. Environmental Protection Agency. Research Triangle Park, NC. Publication No. AP-40. May 1973.

17. Standard Support and Environmental Impact Statement for Control of Benzene from the Gasoline Marketing Industry (Draft). Office of Air Quality Planning and Standards, U.S. Environmental Protection Agency. Research Triangle Park, NC. June 21, 1978.

18. Control of Refinery Vacuum Producing Systems, Wastewater Separators, and Process Unit Turnarounds. U.S. Environmental Protection Agency. Research Triangle Park, NC. Publication No. EPA-450/2-77-025. October 1977.

19. Duravent, S. W., D. Gee, and W. M. Talber. Evaluation of Control Technology for Benzene Transfer Operations. Office of Air Quality Planning and Standards, U.S. Environmental Protection Agency. Research Triangle Park, NC. Publication No. EPA-450/3-78-018. April 1978.

20. Control Techniques for Hydrocarbon and Organic Solvent Emissions from Stationary Sources. National Air Pollution Control Administration, U.S. Department of Health, Education, and Welfare. Washington, D.C. Publication No. AP-68. March 1970.

21. Letter from Schkade, Otto, Vapor Control Company, to C. Allen, Research Triangle Institute. April 7, 1982. Enclosing product information on vapor recovery systems.

22. VOC Fugitive Emissions in Petroleum Refining Industry--Background Information for Proposed Standards. U.S. Environmental Protection Agency. Research Triangle Park, NC. Publication No. EPA-450/3-81-015a. November 1982.

23. Fugitive Emission Sources of Organic Compounds--Additional Information on Emissions, Emission Reductions, and Costs. U.S. Environmental Protection Agency. Research Triangle Park, NC. Publication No. EPA-450/3-82-010. April 1982.

24. Tichenor, B. A., K. C. Hustvedt, and R. C. Weber. Controlling Petroleum Refinery Fugitive Emissions Via Leak Detection and Repair. Symposium on Atmospheric Emissions from Petroleum Refineries. Austin, TX. Publication No. EPA-600/9-80-013. November 6, 1979.

5. MODIFICATIONS

5.1 BACKGROUND

This chapter identifies and discusses possible modifications to sources in coke by-product plants. The purpose of this chapter is to present what changes are potential modifications, not to define what changes would be judged as a modification. Determination of a modification is made by the Administrator.

"Modification" is defined in 40 CRF Part 61, Section 61.02, as:

> "any physical change in, or change in the method of operation of, a stationary source which increases the amount of any hazardous air pollutant emitted by such source or which results in the emission of any hazardous air pollutant not previously emitted, except that:
> (1) Routine maintenance, repair, and replacement shall not be considered physical changes, and
> (2) The following shall not be considered a change in the method of operation:
> (i) An increase in the production rate, if such increase does not exceed the operating design capacity of the stationary source;
> (ii) An increase in hours of operation.[1]

The owner or operator of any source must notify EPA of changes that could increase emissions of an air pollutant for which a NESHAP applies.[2] Such changes are not considered modifications if the owner or operator demonstrates that no increase in applicable emissions would result from the alteration, in which case, the existing source would not have to meet the emission standards for a new source.

5.2 PROCESS MODIFICATIONS

The by-product coke industry is a mature industry with a mode of operation that has been developed by over 50 years of experience. A new by-product recovery process probably will not be commercially available within the next 10 years. Some companies have experimented with using inferior coking coals by either coal briquetting or formed coke processes,

but large-scale commercial use of these is not expected in the near future.[3] Thus, any process modifications will be within the process description explained in Chapter 3.

One example of a process variation that would not be considered a process modification is inconsistent variation in naphthalene processing. There is substantial potential for temperature variability in naphthalene melting operations, and this variability leads to emission variability. The temperature variability probably would not be considered a process modification, but if the method of naphthalene melting consistently results in greater emissions, such a change may constitute a process modification.

5.2.1 Tar Dewatering

Thermal dewatering of tar is a variation of tar dewatering by decanting in storage tanks. Water is driven off as water vapor. Higher temperatures are used in thermal dewatering than are used in other dewatering processes; therefore, the implementation of thermal dewatering could increase benzene emissions and might be a process modification.

5.2.2 Tar Storage

Increases in the storage temperature and changes in the method of filling the tank are examples of process modifications that could increase emissions.

5.3 EQUIPMENT MODIFICATIONS

Combined with the definition of modification that excludes routine maintenance, repair, and replacement of equipment, it is not expected that equipment changes would be potential modifications. Any discontinuance of a control or control technique on a source that does not offset the increased emissions by implementing an alternate control technique on that source would be considered a modification.

5.4 REFERENCES

1. National Emission Standards for Hazardous Air Pollutants. Subpart A. 40 CFR 61.02.

2. National Emission Standards for Hazardous Air Pollutants. Subpart A. 40 CFR 61.05 (44 Federal Register 55174).

3. Hogan, W. T., and F. T. Koebkle. Analysis of the U.S. Metallurgical Coke Industry. Industrial Economics Research Institute, Fordham University. October 1979. (Prepared for U.S. Department of Commerce under EDA Project 99-26-09886-10.)

6. MODEL PLANTS AND CONTROL OPTIONS

The impact of various options to control benzene emissions from coke by-product recovery plants is determined, in part, through analysis of model plants. Subsection 6.1 defines three model coke by-product recovery plants that typify processes that might be present at a small by-product plant, a medium by-product plant, and a large by-product plant. Discussed in Subsection 6.2 of this chapter are the control options considered for the benzene emission sources present in coke by-product recovery plants.

6.1 MODEL PLANTS OVERVIEW

Model plants for this industry are parametric descriptions of the processes that may be practiced at an actual plant in a given size range. Model plants are used primarily to estimate costs for each control option as a function of plant size. Specific production capacity, processes, and emission sources first were identified for each actual plant to develop estimates of total nationwide impacts. A cost function for each process and emission source was then developed from the model plant analysis in terms of production capacity and applied to each actual plant. Actual plant costs are summed for all 55 plants to estimate total nationwide costs. This method of analysis accounts for variations in the processes used at individual plants and the differences in cost caused by these variations. Nationwide emission estimates are based on the type of process or emission source at a particular plant, the associated emission factor for the emission source in terms of grams of benzene per megagram of coke capacity, and the plant's capacity. The estimated nationwide environmental and energy impacts of each control option are presented in Chapter 7.

Information regarding estimated control costs and costing methodology is presented in Chapter 8, and an economic impact analysis of the control options is presented in Chapter 9.

6.1.1 Selection of Model Plant Size

Three model plants were developed to represent typical process combinations for a small plant (Model Plant 1), a medium plant (Model Plant 2), and a large plant (Model Plant 3). The approximate distribution of actual plant sizes as a function of coke capacity is shown in Figure 6-1. Based on the distribution indicated in Figure 6-1, 25 (of 55 existing plants) plants produce between 300 Mg/day of coke (330 ton/day) and 2,000 Mg/day of coke (2,200 ton/day), accounting for 17 percent of total domestic coke capacity. For the model plant analyses, a small model plant is defined as a plant producing 1,000 Mg/day of coke (1,100 ton/day), slightly less than the midpoint of the actual production range. A total of 26 plants produce between 2,000 Mg/day of coke (2,200 ton/day) and 6,000 Mg/day of coke (6,600 ton/day). These medium-sized plants account for 59 percent of total domestic capacity. The production range midpoint of 4,000 Mg/day (4,400 ton/day) was selected to define the size of a medium-sized model plant (Model Plant 2). According to the distribution shown in Figure 6-1, four plants produce between 6,000 Mg/day (6,600 ton/day) and 13,000 Mg/day (14,300 ton/day) of coke. These large plants account for 24 percent of total domestic capacity. For model plant analyses, a large plant (Model Plant 3) is defined as a model plant producing 9,000 Mg/ day (9,900 ton/day), the midpoint of the actual production range.

No construction of new plants is expected during the next 5 years. However, if a new plant were constructed, it most probably would fall within the size ranges for Model Plant 1, 2, or 3.

6.1.2 Selection of Model Plant Emission Sources

A total of 55 coke by-product recovery plants currently operate throughout the United States. These plants vary widely in size, age, design, equipment, products, and degree of control. Other factors such as space requirements; availability of public water treatment

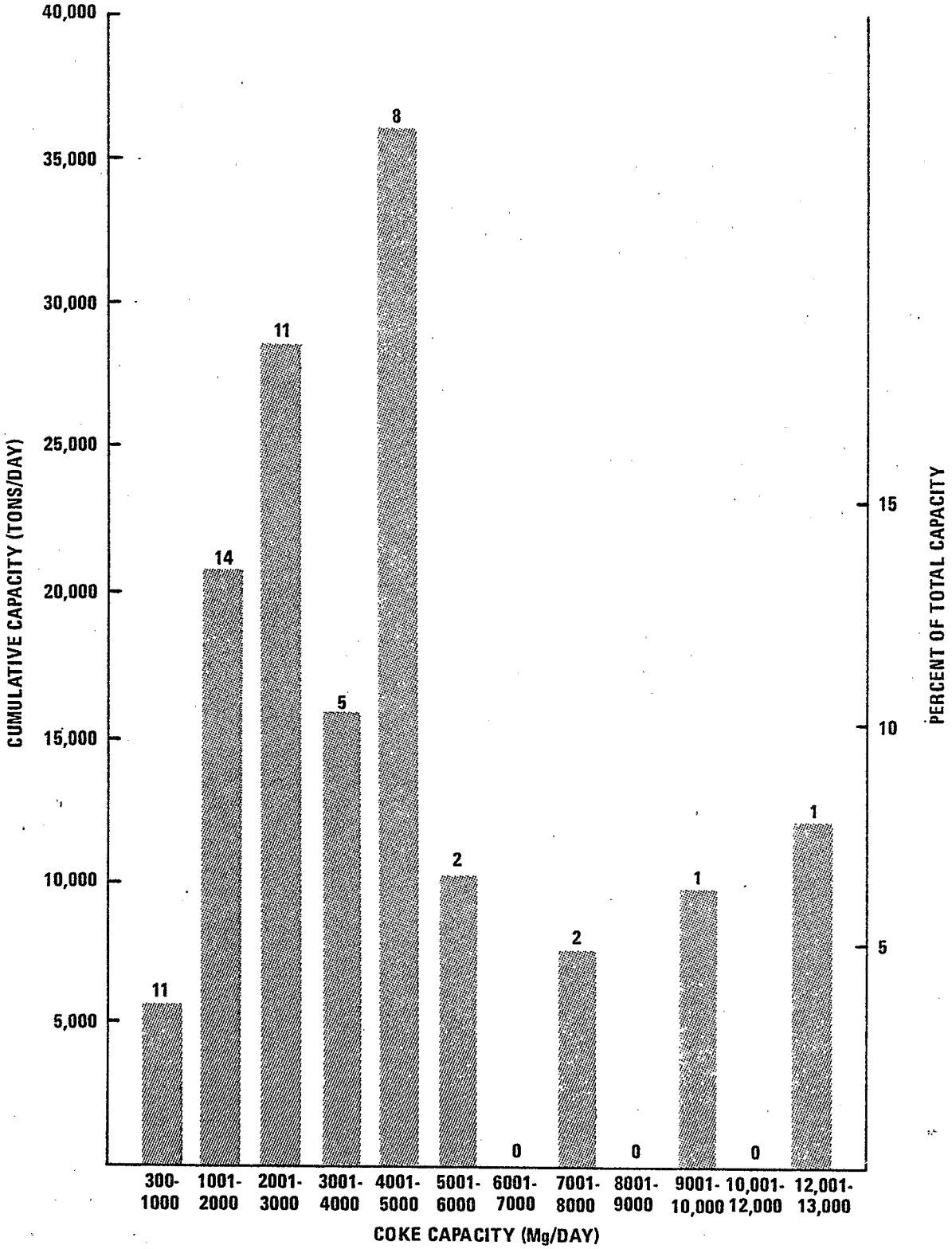

NOTE: Numbers above bars indicate number of plants in a given size range.

Figure 6-1. Distribution of plant size as a function of coke capacity.

facilities for waste disposal; and the plant's physical location in relationship to sensitive environmental areas, such as wetlands, also contribute to the site-specific nature of by-product plant processes and operational characteristics.

Many different process combinations are used throughout the coke by-product recovery industry because of the site-specific nature of the plants. For this reason, typical representations of actual processes and process combinations were assigned to the appropriate model plant size. The process combinations used are similar to those widely used at actual plants. By-product recovery processes associated with the emission sources considered for regulation for each model plant are presented in Table 6-1.

The presence of an emission source at a plant depends on the processes practiced at that plant. Benzene emission sources associated with the model plant processes are shown in Table 6-2. Coke by-product recovery process flow diagrams for the three model plants are presented in Figure 6-2, Figure 6-3, and Figure 6-4. These flow diagrams are intended to represent the typical products, processes, and emission sources for each model plant size. Table 6-3 indicates the estimated number of process units for each model plant size. The number of process units and storage tanks at the model plants was derived from plant trips, emission test reports, and responses to Section 114 questionnaires. The number of units and the processes practiced at specific plants are variable because various sizing options are available. For example, a small plant could have one large light-oil storage tank or two smaller light-oil storage tanks. The numbers in Table 6-4 represent typical numbers of sources according to plant size and span the range of the available data for the number of units at specific plants.

As indicated in Figures 6-2 through 6-4, crude tar production is practiced at Model Plants 1, 2, and 3. Benzene emission sources associated with crude tar production considered for regulation include tar decanters, tar-intercepting sumps, flushing-liquor circulation tanks, tar-dewatering tanks, excess-ammonia liquor storage tanks, and tar storage tanks (including tar-collecting tanks).

TABLE 6-1. COKE BY-PRODUCT RECOVERY PLANT PROCESSES

	Model plant		
	1	2	3
Size (Mg/day)	1,000	4,000	9,000
Range represented[a] (Mg/day)	300-2,000	2,000-6,000	6,000-13,000
Number of plants within represented range[a]	25	26	4
Percent of total coke capacity	17	59	24
Crude tar production	Yes	Yes	Yes
Direct-water final cooler	Yes	No	No
Tar-bottom final cooler	No	Yes	No
Wash-oil final cooler	No	No	Yes
Naphthalene processing[b]	Yes	No	No
Light-oil recovery	Yes	Yes	Yes
Light-oil rectification	No	Yes	Yes
Light-oil refining	No	No	Yes

[a]Based on the distribution presented in Figure 6-1.

[b]Includes naphthalene separation, drying, and handling.

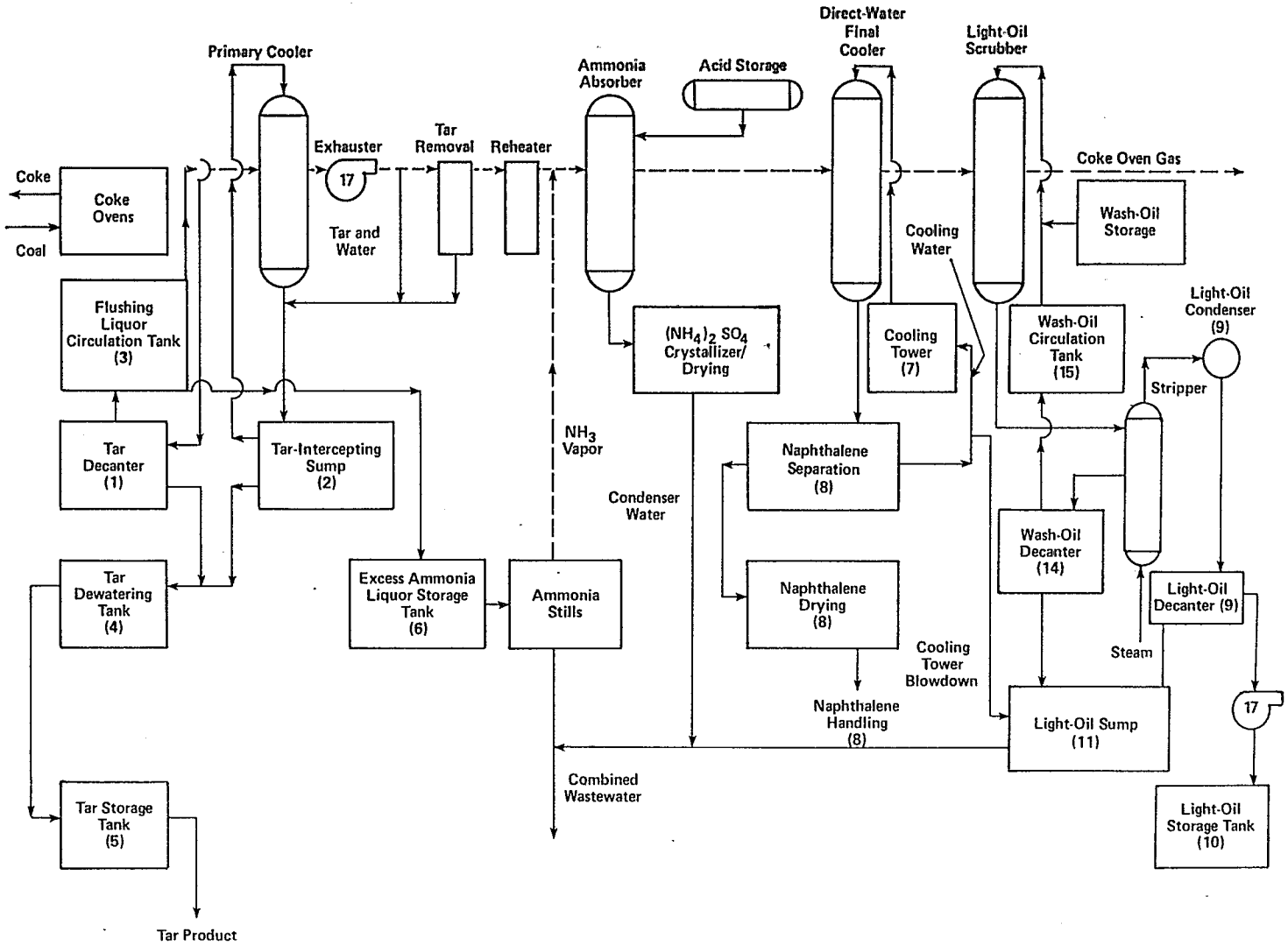

NOTE: The emission sources are indicated with numbers that correspond to the numbers in Table 6-2.

Figure 6-2. Coke oven by-product recovery, Model Plant 1 (1,000 Mg/day).

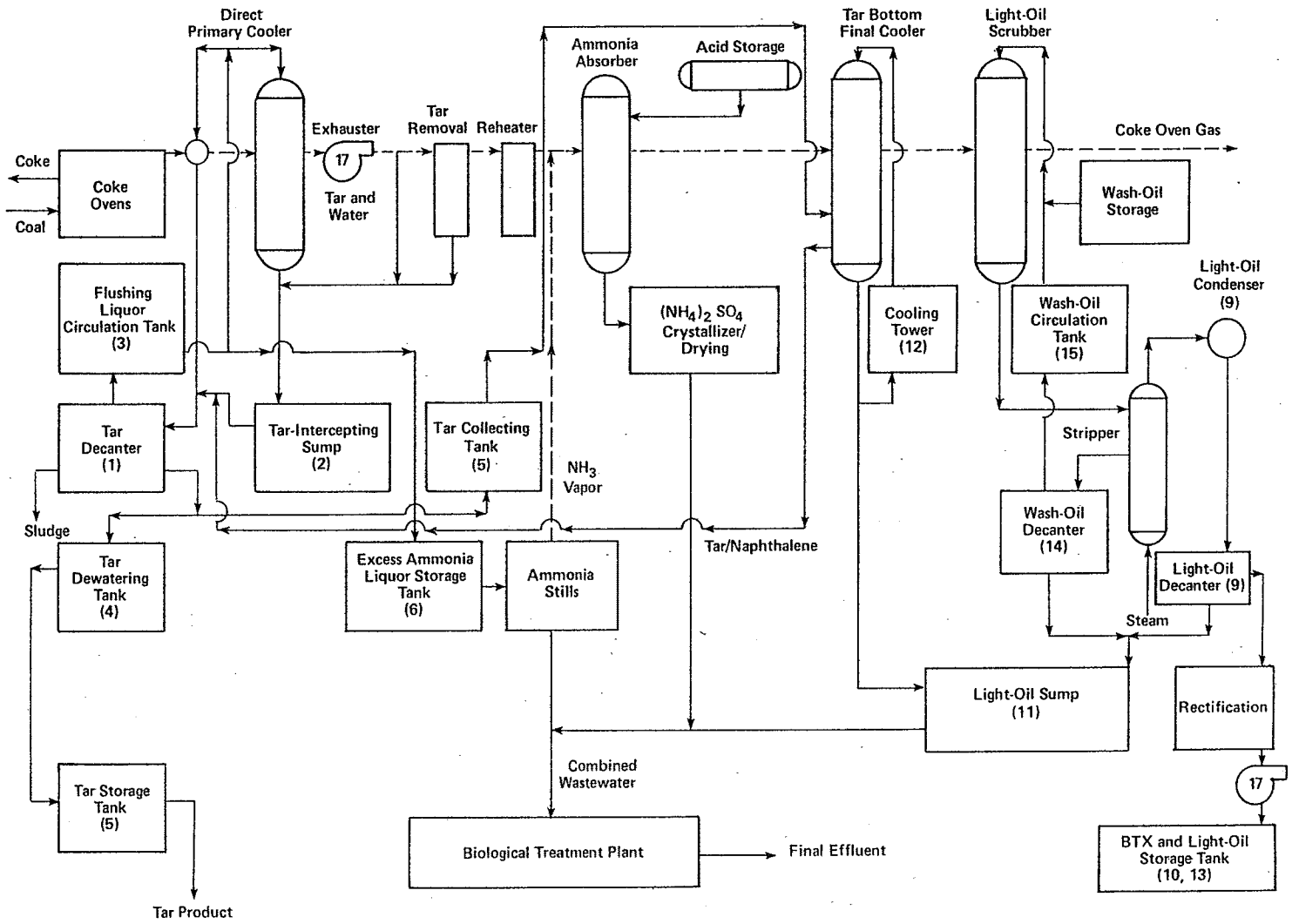

NOTE: The emission sources are indicated with numbers that correspond to the numbers in Table 6-2.

Figure 6-3. Coke oven by-product recovery, Model Plant 2 (4,000 Mg/day).

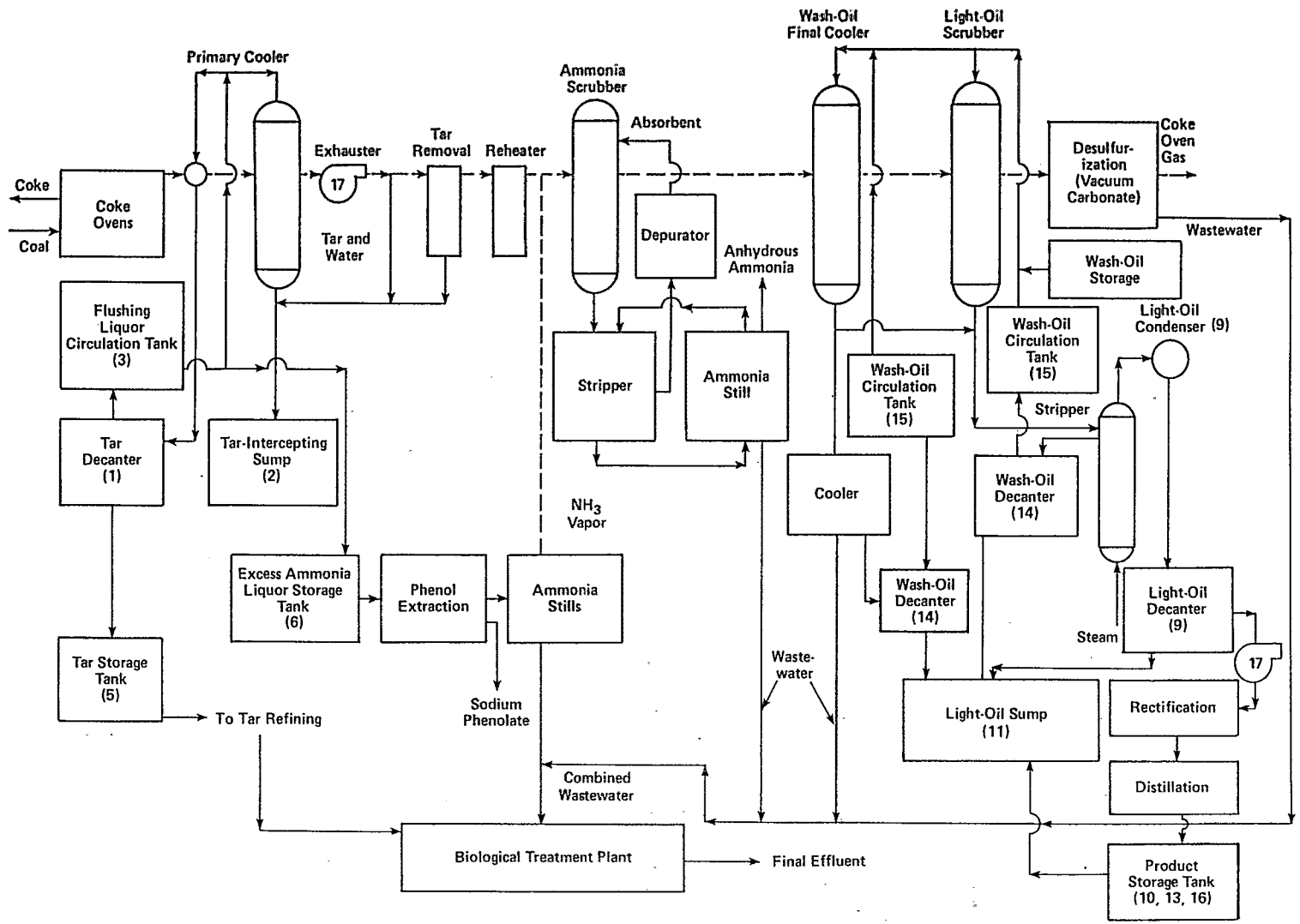

NOTE: The emission sources are indicated with numbers that correspond to the numbers in Table 6-2.

Figure 6-4. Coke oven by-product recovery, Model Plant 3 (9,000 Mg/day).

TABLE 6-2. EMISSION SOURCES FOR COKE BY-PRODUCT RECOVERY MODEL PLANTS

Number[a]	Source	Model plant
1	Tar decanter	1,2,3
2	Tar-intercepting sump	1,2,3
3	Flushing-liquor circulation tank	1,2,3
4	Tar-dewatering tank	1,2
5	Tar storage tank	1,2,3
6	Excess-ammonia liquor storage tank	1,2,3
7	Direct-water final-cooler cooling tower	1
8	Naphthalene processing[b]	1
9	Light-oil condenser and light-oil decanter vent	1,2,3
10	Light-oil storage tank	1,2,3
11	Light-oil sump	1,2,3
12	Tar-bottom final-cooler cooling tower	2
13	Benzene mixtures (BTX) storage tank	2,3
14	Wash-oil decanter	1,2,3
15	Wash-oil circulation tank	1,2,3
16	Benzene storage tank	3
17	Equipment components[c]	1,2,3

[a]Corresponds to sources indicated in Figures 6-2, 6-3, and 6-4.

[b]Includes naphthalene separation, drying, and handling.

[c]Pumps, valves, exhausters, pressure-relief devices, sampling connection systems, and open-ended lines.

TABLE 6-3. NUMBER OF PROCESS UNITS AT COKE BY-PRODUCT RECOVERY MODEL PLANTS

Process equipment	Number of units		
	Model Plant 1	Model Plant 2	Model Plant 3
Tar decanter	2	3	6
Flushing-liquor circulation tank	1	2	3
Tar-intercepting sump	1	1	2
Tar dewatering tank	1	2	4
Tar-storage tank[a]	4	8	12
Light-oil and BTX storage tank	2	6	9
Light-oil condenser	3	3	3
Light-oil sump	1	1	2
Light-oil decanter	1	1	2
Wash-oil decanter	1	2	4
Wash-oil circulation tank	1	2	4
Excess-ammonia liquor storage tank	1	3	6
Benzene storage tank	0	0	3

[a]Includes tar-collecting tanks.

The final-cooler cooling tower, generally uncontrolled throughout the industry, is usually the largest source of benzene emissions at a plant equipped with a direct-water final cooler. This process is practiced by approximately 23 plants. Benzene emissions are released when the water from the final cooler is cooled against air in the direct-water final-cooler cooling tower.

Plants within the size range of Model Plant 1 (300 to 2,000 Mg/day) account for about half of the direct-water final coolers and a similar proportion of tar-bottom final coolers in the industry. For the model plant analyses, Model Plant 1 has been assumed to have a direct-water final cooler and Model Plant 2 a tar-bottom final cooler.

At Model Plant 1, naphthalene is separated from the process stream by a direct-water final cooler. Naphthalene is removed from the well of the final cooler and may be transported to facilities for steam drying. Naphthalene processing (including separation, drying, and handling) may result in significant quantities of benzene emissions.

Model Plant 2 has a tar-bottom final cooler. This process is used by approximately 18 plants, or 33 percent of the industry. Although benzene emissions are still released when water is cooled against air in the final-cooler cooling tower, emissions are substantially less than are emissions from the direct-water final-cooler cooling tower. When naphthalene is separated by a tar-bottom final cooler, the naphthalene remains in the tar. The tar in which the naphthalene is entrained may be recirculated by pipeline to tar storage tanks or sold as a final product. Thus, benzene emissions from naphthalene separation, drying, and handling are not attributed to Model Plant 2.

At Model Plant 3, a wash-oil final cooler is assumed to be present. Five plants currently are equipped with this system. Because the wash oil is cooled in an indirect heat exchanger, there are no benzene emissions from the cooling tower. In this system, naphthalene dissolves in the wash oil, which is then indirectly cooled and recirculated to the final cooler. Although emissions are not released from the cooling tower, some emissions occur from the wash-oil decanter and wash-oil circulation tank associated with the wash-oil final cooler.

Light-oil recovery processes are attributed to Model Plants 1, 2, and 3. Benzene emission sources associated with light-oil recovery include the common vent for light-oil condensers and light-oil decanters, light-oil storage tanks, light-oil sumps, wash-oil decanters, and wash-oil circulation tanks. At Model Plant 3, wash-oil decanters and wash-oil circulation tanks occur in conjunction with both the wash-oil final-cooler system and light-oil recovery operations. However, light-oil rectification to obtain benzene-mixture products such as BTX is attributed only to Model Plants 2 and 3. Storage tanks used to hold benzene mixtures are the emission sources associated with light-oil rectification at these model plants. Because light-oil refining is usually practiced at large plants, benzene storage tanks are attributed only to Model Plant 3.

Fugitive emission sources at coke by-product recovery plants include equipment components such as pumps, valves, exhausters, pressure-relief devices, sampling connection systems, and open-ended lines. This equipment is prevalent among all plants and is attributed to Model Plants 1, 2, and 3. Benzene emissions and the associated control costs for this equipment depend on the number of pieces of equipment at the plant, and not on plant capacity. Plants that practice benzene refining would have more pieces of equipment than do plants that recover light-oil and BTX. Thus, Model Plant 3, which practices benzene recovery, is credited with more pieces of equipment than are Model Plants 1 and 2.

Table 6-4 presents the estimated number of leaking equipment components in benzene service for each model plant size. The number of equipment components was derived from emission test reports and responses to Section 114 questionnaires. The data on number of exhausters ranged from 2 to 6 for 8 plants, and 1 plant had 25 exhausters. Because exhausters can be sized to handle different capacities, the number of exhausters was not a function of capacity; therefore, the number chosen for the model plants (six) represents an average of available data. Sample connections were defined as a

TABLE 6-4. NUMBER OF EQUIPMENT COMPONENTS AT COKE BY-PRODUCT RECOVERY MODEL PLANTS

Equipment item	Number of units		
	Model Plant 1	Model Plant 2	Model Plant 3
Exhausters	6	6	6
Pump seals	15	15	30
Valves	105	105	210
Relief valves	5	5	9
Sample connections	10	10	21
Open-ended lines	22	22	45

subset of open-ended lines; therefore, the 22 open-ended lines for Model Plant 2 includes 10 sampling connections and 12 open-ended lines that are not sampling connections.

6.2 CONTROL OPTIONS OVERVIEW

In Subsection 6.1, the emission sources considered for regulation are identified in association with typical processes that may be practiced at each size model plant. These emission sources are discussed further in Chapter 3. Several options are available for the control of benzene emissions from these sources. The control options considered for "best available technology" (BAT) for each emission source and the associated benzene control efficiencies are presented in Table 6-5. Further information regarding each control technique is contained in Chapter 4. Detailed cost information is presented in Chapter 8 for each emission source and associated control option. The environmental and energy impacts of the control options are discussed in Chapter 7, while the economic impacts are presented in Chapter 8.

6.2.1 Final-Cooler Cooling Tower

As shown in Table 6-5, three options are considered to control emissions from final-cooler cooling towers. At plants operating a direct-water final cooler, naphthalene could be collected by a tar-bottom final cooler or a wash-oil final cooler. Both systems would eliminate benzene emissions resulting from naphthalene separation, handling, and drying and would reduce emissions from the cooling tower substantially. Use of the tar-bottom final cooler would achieve an overall benzene emission reduction of about 81 percent, while use of a wash-oil system would achieve an emission reduction of 100 percent. At a medium plant operating a tar-bottom final cooler, a benzene 100-percent control efficiency also would be achieved with a wash-oil final cooler.

6.2.2 Gas Blanketing System

Gas blanketing has been demonstrated as an effective control technique for removing hydrocarbon vapors; e.g., benzene, from process vessels and product storage tanks. The basic principles of gas blanketing require sealing all the openings on a vessel or tank, supplying a

TABLE 6-5. COKE BY-PRODUCT PLANT BENZENE EMISSIONS SOURCES AND CONTROL OPTIONS

Emission source	Control option	Control efficiency (%)
1. Final-cooler cooling towers		
a. Direct-water final-cooler cooling tower	1. Use tar-bottom final cooler	81[a]
	2. Use wash-oil final cooler	100
b. Tar-bottom final-cooler cooling tower	1. Use wash-oil final cooler	100
2. Tar decanters	Coke oven gas blanketing from collecting main	95
3. Tar-intercepting sump	Coke oven gas blanketing from collecting main	98
4. Flushing-liquor circulation tanks	Coke oven gas blanketing from collecting main	98
5. Tar-dewatering tanks	1. Coke oven gas blanketing from collecting main	98
	2. Wash-oil scrubber	90
6. Light-oil condenser and light-oil decanter vents	Coke oven gas blanketing from gas holder	98
7. Wash-oil decanters	Coke oven gas blanketing from gas holder	98
8. Wash-oil circulation tanks	Coke oven gas blanketing from gas holder	98
9. Tar-storage tanks	1. Coke oven gas blanketing from collecting main	98
	2. Wash-oil scrubber	90
10. Excess-ammonia liquor storage tanks	1. Coke oven gas blanketing from collecting main	98
	2. Wash-oil scrubber	90
11. Light-oil storage tanks	1. Coke oven gas blanketing from gas holder	98
	2. Wash-oil scrubber	90
12. Benzene-mixture storage tanks	1. Coke oven gas blanketing from gas holder	98
	2. Wash-oil scrubber	90
13. Benzene storage tanks	1. Nitrogen or natural gas blanketing system	98
	2. Wash-oil scrubber	90
14. Light-oil sumps	Source enclosure	98
15. Pumps	1. Quarterly inspections	71
	2. Monthly inspections	83
	3. Equip with dual mechanical seals	100
16. Valves	1. Quarterly inspections	63
	2. Monthly inspections	72
	3. Equip with sealed bellows valves	100
17. Exhausters	1. Quarterly inspections	55
	2. Monthly inspections	64
	3. Equip with degassing reservoir vents	100
18. Pressure-relief devices	1. Quarterly inspections	44
	2. Monthly inspections	52
	3. Equip with rupture disc system	100
19. Sampling connection systems	Closed-purge sampling	100
20. Open-ended lines	Plug or cap	100

[a]Includes a 100-percent emission reduction for naphthalene processing and a 74-percent emission reduction for the direct-water final-cooler cooling tower.

constant-pressure gas blanket with coke-oven gas, nitrogen or natural gas, and providing for recovery or destruction of displaced vapor emissions. Depending on the source to be controlled, displaced vapors from the enclosed source can be transported through a piping system to the collecting main, to the battery gas holder, or to another point in the by-product recovery process.

With gas blanketing from the collecting main, a vapor recovery system is in place in the form of the by-product recovery process that removes organics from the raw coke oven gas. Emission sources that can be blanketed with raw coke oven gas from the collecting main include tar decanters, tar-intercepting sumps, flushing-liquor circulation tanks, tar storage tanks, tar-dewatering tanks, and excess-ammonia liquor storage tanks. With gas blanketing from the gas holder, a vapor destruction system is in place because the clean oven gas is burned to recover the fuel valve. Emission sources that can be blanketed with clean coke oven gas from the battery gas holder include light-oil condensers and decanters, wash-oil decanters and circulation tanks, light-oil storage tanks, and benzene-mixture storage tanks. To prevent product contamination, nitrogen or natural gas can be used to blanket storage tanks containing refined benzene. Emissions could be routed to the collecting main and burned in the gas combustion system or routed to the gas main before light-oil removal and recovered in the wash-oil scrubbing operation.

With source enclosure, the blanketing system's benzene control efficiency is essentially 100 percent. Because the deterioration of piping occasionally can result in leaks, the benzene control efficiency for gas blanketing is estimated at 98 percent for each source except tar decanters. A lower control efficiency (95 percent) is estimated for tar decanters because a portion of this vessel's surface area must be left open to the atmosphere to allow for sludge removal operations.

6.2.3 Wash-Oil Scrubber

A wash-oil scrubber also can be used to absorb organics from tar dewatering tanks and from storage tanks containing tar, excess ammonia liquor, light-oil, BTX, or refined benzene. In some cases, a wash-oil scrubber could be less expensive than gas blanketing would be. Wash-oil

scrubbers currently used for light-oil removal are large towers designed to handle high volumes of coke oven gas. This technology can be applied to these storage tanks based on a smaller scale design for the scrubbing chamber and a lower wash-oil circulation rate. In an unpacked wash-oil scrubber, emissions enter the bottom of the scrubbing chamber and contact a spray of wash oil, which is introduced into the top of the spray chamber. The wash-oil spray absorbs benzene from the vented vapors. After passing through the scrubber, benzolized wash oil is routed to the light-oil recovery plant for removal of benzene and other organics; the debenzolized wash oil is then recycled to the scrubber. The benzene control efficiency of this technique is estimated to be 90 percent.

6.2.4 Light-Oil Sump

Source enclosure has been demonstrated as an effective method for reducing benzene emissions from this source. The enclosure (i.e., a roof) need not be permanently affixed so the roof could be removed to allow for maintenance or sludge removal. A gasket seal could be installed around the rim of the sump cover to form a closed system to contain the emissions. In addition, a vertical vent could be added to the sump cover so that excess pressure does not build up in the sump. Emissions from the vertical vent could be controlled by means of a water leg seal, a pressure-relief device, or a vacuum relief device. The control efficiency of the sump cover, including the vertical vent, is estimated at 98 percent.

6.2.5 Pumps

Three options are considered to control fugitive emissions from leaking pumps. These options include implementing a leak detection and repair program based on quarterly or monthly inspection intervals. As indicated in Table 6-5, quarterly inspections would achieve about a 72-percent benzene control efficiency, while monthly inspections would achieve about an 83-percent benzene control efficiency. A third option would require that pumps be equipped with dual mechanical seal systems. This equipment requirement would achieve a benzene control efficiency estimated at 100 percent.

6.2.6 Valves

Three options also are considered to control fugitive benzene emissions from leaking valves. These options include implementing a leak detection and repair program based on inspections made at quarterly or monthly intervals. A third option would require installing sealed-bellows valves. Quarterly monitoring valves result in about a 63-percent control efficiency. A leak detection and repair program based on monthly monitoring intervals would achieve a benzene control efficiency estimated at 73 percent. Equipping each existing valve at a medium-sized plant with sealed bellows valves would result in about a 100-percent benzene control efficiency.

6.2.7 Exhausters

Control options similar to those for pumps and valves are considered for application to exhausters. Implementing a leak detection and repair program with monitoring at quarterly intervals would achieve about 42 percent benzene control efficiency, while monitoring at monthly intervals would result in a 52-percent benzene control efficiency. An estimated benzene control efficiency of 100 percent would be achieved if each exhauster were equipped with degassing reservoir vents. Emissions from the degassing reservoir vents could be vented to a control device or back to the process. For example, a closed loop could be installed to route emissions from the degassing reservoir vent to the exhauster inlet and back into the coke oven gas.

6.2.8 Pressure-Relief Devices

The control options considered for pressure-relief devices include quarterly inspections, monthly inspections, and equipment requirements. The equipment requirements considered include the use of a rupture disc system (block valve or a three-way valve). A leak detection and repair program with monitoring at quarterly inspections would achieve a benzene control efficiency of about 44 percent, while an estimated benzene control efficiency of 52 percent would result from a monthly inspection program. Equipping each device with a rupture disc system would achieve a benzene control efficiency estimated at 100 percent.

6.2.9 Sampling Connection Systems and Open-Ended Lines

Benzene emissions from open-ended lines can be eliminated by capping or plugging the end of the line. Closed-purge sampling techniques can eliminate benzene emissions from a sampling connection system. As shown in Table 6-5, the benzene control efficiency for both control options is estimated at 100 percent.

7.0 ENVIRONMENTAL IMPACT

This chapter discusses the environmental impacts from implementing the control options presented in Chapter 6. The primary emphasis is a quantitative assessment of benzene emissions that would result from each of the control options. The emissions of organic compounds other than benzene also are estimated. Both beneficial and adverse environmental impacts are assessed in terms of water quality, solid waste, energy, and other environmental concerns.

7.1 BENZENE AIR POLLUTION IMPACT

7.1.1 Emission Source Characterization

The emission sources at coke oven by-product plants are discussed in Chapter 3. The emission sources, emission factors, and uncontrolled industry emissions are presented in Table 7-1. These uncontrolled emissions are characteristic of existing conditions and are considered baseline. They are estimated under the regulatory alternative of no national by-product plant benzene emission standard. Table 3-3 presents assumptions about the emission source distribution among the various coke oven by-product plants. Chapter 6 describes the model plant approach used to characterize the various emission sources for different sized plants. The emission factors presented in Chapter 3, the capacity of the plants identified in Table 3-3, and the types of emission sources present at the different plants also identified in Table 3-3 are used to estimate industry emissions.

7.1.2 Development of Benzene Emission Levels

Emission factors for the model units were determined for each control option to estimate the impacts of the control options on benzene emission levels. The control technology discussed in Chapter 4 is applied to the model plants and to the industry model to

TABLE 7-1. ESTIMATED NATIONAL BASELINE BENZENE EMISSIONS FROM COKE OVEN BY-PRODUCT RECOVERY PLANTS

	Number of plants uncontrolled	Capacity uncontrolled (Mg/day)	Emission factor (g/Mg)	National emissions (Mg/yr)
Direct-water final-cooler cooling tower	23	64,376	270	6,340
Tar-bottom final-cooler cooling tower	18	42,790	70	1,090
Light-oil condenser vent	44	125,724	89	4,080
Naphthalene separation	23	64,376	87	2,040
Naphthalene processing	23	64,376	20	470
Tar-intercepting sump	55	154,680	95	5,360
Tar dewatering	54	142,000	21	1,090
Tar decanter	55	154,680	77	4,350
Tar storage	55	154,680	12	680
Light-oil sump	46	143,203	15	780
Light-oil storage	46	143,203	5.8	300
Benzene-toluene-xylene storage	20	39,479	5.8	80
Benzene storage	7	35,720	5.8	80
Flushing-liquor circulation tank	55	154,680	9	510
Excess-ammonia liquor tank	55	154,680	9	510
Wash-oil decanter	44	131,340	3.8	180
Wash-oil circulation tank	44	131,340	3.8	180
Pump seals	46	143,203	--[a]	600
Valves	46	143,203	--[a]	400
Pressure relief devices	46	143,203	--[a]	270
Exhausters	46	143,203	--[a]	33
Sample connections	46	143,203	--[a]	50
Open lines	46	143,203	--[a]	18

[a]Emissions were estimated on the basis of the number of potentially leaking units. Emission factors in kg/day are listed in Table 3-6.

estimate the reduction in benzene emissions below baseline levels. For example, the controlled emission factor for tar decanters was 5 percent of the uncontrolled emission factor because the control was assumed to be 95 percent effective.

Controlled benzene emission factors were also developed for sources that would be controlled by implementation of a leak detection and repair program. These factors for pressure relief devices and exhausters were calculated by multiplying the uncontrolled emission factor for each type of equipment by a set of correction factors (see Appendix F). The factors for pump seals and valves were obtained from the leak detection and repair (LDAR) model discussed in Subsection 4.8.1.3. Plugs for open-ended lines and closed sampling lines were assumed to be 100 percent effective.

The resulting controlled benzene emissions are listed in Table 7-2 by source. Where the control options require an equipment specification to control leaks, it is assumed that there are no subsequent emissions from the controlled source.

7.1.3 Impact on Benzene Emissions from New Sources

Over a 5-year period from 1982 to 1986, no new by-product plants are expected to be operated. Therefore, the control options are estimated to affect only existing emissions.

7.2 IMPACT OF THE CONTROL OPTIONS ON VOLATILE ORGANIC COMPOUND (VOC) EMISSIONS

VOC emissions were estimated by using emission factors derived from coke oven by-product plant sampling.[1] The bases for derivation of the emission factors are detailed in a separate report.[2] The emission factors are used in Table 7-3 to estimate the national emissions of VOC's. The atmospheric emissions are estimated as approximately 194,000 Mg/yr of VOC's. Table 7-4 presents the effect of the control options on national VOC emissions from each of the plant sources.

The estimated 194,000 Mg of VOC's emitted each year from coke oven by-product plants are a significant part of the estimated national VOC emissions (1,400,000 Mg/yr from the processing of over 100 different organic chemicals).[3] The organic materials emitted from by-product

TABLE 7-2. THE EFFECT OF CONTROL OPTIONS ON REDUCING BENZENE EMISSIONS AT COKE OVEN BY-PRODUCT PLANTS

Source	Control option	Number of affected plants	Baseline national emissions (Mg benzene/yr)	Emissions from the source after control (Mg benzene/yr)
1. All sources	No national emission control	55	29,000	29,000
2. Final-cooler cooling tower	1. Tar-bottom final cooler	23	9,940	2,730
	2. Wash-oil final cooler	41	9,940	0
3. Tar-intercepting sump	Coke oven gas blanketing	55	5,360	107
4. Tar decanter	Coke oven gas blanketing	55	4,350	220
5. Light-oil condenser and decanter vent	Coke oven gas blanketing	44	4,080	82
6. Tar dewatering	1. Wash-oil scrubber	54	1,090	109
	2. Coke oven gas blanketing	54	1,090	22
7. Light-oil sump	Sealed cover	46	780	16
8. Tar storage	1. Wash-oil scrubber	55	680	68
	2. Coke oven gas blanketing	55	680	14
9. Pump seals	1. Quarterly inspection	46	600	170
	2. Monthly inspection	46	600	100
	3. Dual mechanical seals	46	600	0
10. Flushing-liquor circulation tank	Coke oven gas blanketing	55	510	10
11. Excess-ammonia liquor tank	1. Wash-oil scrubber	55	510	51
	2. Coke oven gas blanketing	55	510	10
12. Benzene storage	1. Wash-oil scrubber	46	460	46
	2. Gas blanketing	46	460	9
13. Valves	1. Quarterly inspection	46	400	150
	2. Monthly inspection	46	400	110
	3. Sealed-bellows valves	46	400	0
14. Wash-oil decanter and circulation tank	Coke oven gas blanketing	46	360	7
15. Pressure relief devices	1. Quarterly inspection	46	270	150
	2. Monthly inspection	46	270	130
	3. Rupture disc	46	270	0
16. Exhausters	1. Quarterly inspection	46	33	19
	2. Monthly inspection	46	33	16
	3. Degassing reservoir vents	46	33	0
17. Sample connections	Closed sampling	46	53	0
1. Open-ended lines	Plug lines	46	18	0

TABLE 7-3. ESTIMATED NATIONAL BASELINE VOC[a] EMISSIONS FROM COKE OVEN BY-PRODUCT RECOVERY PLANTS

	Number of plants uncontrolled	Capacity uncontrolled (Mg/day)	Emission factor (g/Mg)	National emissions (Mg/yr)
Direct-water final-cooler cooling tower	23	64,376	4,239	99,600
Tar-bottom final-cooler cooling tower	18	42,790	1,100	17,200
Light-oil condenser vent	44	125,724	127	5,830
Naphthalene separation and processing	23	64,376	168	3,950
Tar-intercepting sump	55	154,680	202	11,400
Tar dewatering	54	142,000	492	25,500
Tar decanter	55	154,680	164	9,260
Tar storage	55	154,680	281	15,900
Light-oil sump	46	143,203	21.4	1,120
Light-oil storage	46	143,203	8.3	430
BTX storage	20	39,479	8.3	120
Benzene storage	7	35,720	5.8	76
Flushing-liquor circulation tank	55	154,680	12.9	730
Excess-ammonia liquor tank	55	154,680	12.9	730
Wash-oil decanter	44	131,340	5.4	260
Wash-oil circulation tank	44	131,340	5.4	260
Pump seals	46	143,203	--[b]	850
Valves	46	143,203	--[b]	570
Pressure relief devices	46	143,203	--[b]	390
Exhausters	46	143,203	--[b]	140
Sample connections	46	143,203	--[b]	76
Open lines	46	143,203	--[b]	26
Total (rounded)				194,400

[a]Benzene and other VOC.

[b]Emissions were estimated on the basis of benzene emissions in Table 7-1 divided by 0.7; i.e., the fraction of benzene in light oil.

TABLE 7-4. THE EFFECT OF BENZENE CONTROL OPTIONS ON REDUCING VOC[a] EMISSIONS OVEN BY-PRODUCT PLANTS

Source	Control option	Number of affected plants	Estimated uncontrolled national emissions (Mg/yr)	VOC emission reductions (Mg/yr)
1. All sources	No national emission control	55	194,400	194,400
2. Final-cooler cooling tower	1. Tar-bottom final cooler	23	120,100	77,600
	2. Wash-oil final cooler	41	120,100	120,100
3. Tar-intercepting sump	Coke oven gas blanketing	55	11,400	11,200
4. Tar decanter	Coke oven gas blanketing	55	9,260	8,800
5. Light-oil condenser vent	Coke oven gas blanketing	44	5,830	5,710
6. Tar dewatering	1. Wash-oil scrubber	54	25,500	22,900
	2. Coke oven gas blanketing	54	25,500	25,100
7. Light-oil sump	Sealed cover	46	1,120	1,090
8. Tar storage	1. Wash-oil scrubber	55	15,900	14,300
	2. Coke oven gas blanketing	55	15,900	15,600
9. Pump seals	1. Quarterly inspection	46	850	600
	2. Monthly inspection	46	850	710
	3. Dual mechanical seals	46	850	850
10. Flushing-liquor circulation tank	Coke oven gas blanketing	55	730	715
11. Excess-ammonia liquor tank	1. Wash-oil scrubber	55	730	656
	2. Coke oven gas blanketing	55	730	715
12. Benzene, light oil, and BTX storage	1. Wash-oil scrubber	46	630	557
	2. Gas blanketing	46	630	606
13. Valves	1. Quarterly inspection	46	570	360
	2. Monthly inspection	46	570	410
	3. Sealed-bellows valves	46	570	570
14. Wash-oil decanter and circulation tank	Coke oven gas blanketing	46	520	510
15. Pressure relief devices	1. Quarterly inspection	46	390	180
	2. Monthly inspection	46	390	200
	3. Rupture disc	46	390	390
16. Exhausters	1. Monthly inspection	46	140	77
	2. Quarterly inspection	46	140	90
	3. Degassing reservoir vents	46	140	140
17. Sample connections	Closed sampling	46	76	76
18. Open-ended lines	Plug lines	46	26	26

[a]Benzene and other VOC.

plants can participate in a wide variety of reactions in the atmosphere, including singlet oxygen formation[4] and formation of ozone-hydrocarbon reaction products.[5 6]

7.3 WATER POLLUTION IMPACT

Most of the control options for the major emission sources do not increase the water pollution of the plants. The preferred technique for most major emission sources is coke oven gas blanketing, which results in essentially complete control of the emission source. Any emissions that are vented from the process are returned to the process at a different location. Thus, no water pollution problems are associated with recycling benzene vapors.

A possible exception is the increased cyanide concentration in wastewater due to indirect heat exchange. Presently, cyanide is emitted from the final-cooler cooling tower at some plants by air stripping of the wastewater. Measured HCN air emissions and calculations based on once-through cooling water indicate that about 200 g/Mg of coke could be added to wastewater for treatment, if indirect cooling were substituted for direct cooling.[1] The actual amount of additional cyanide in the wastewater would depend on cooling water temperature, degree of recycle practiced, and numerous other factors.

7.4 SOLID WASTE DISPOSAL IMPACT

None of the control options will adversely impact either solid waste generation or disposal. The blanketing control techniques not only would result in more complete control of the source but would eliminate some of the potential solid waste problems due to sludge formation in light-oil plant process equipment.

Potential solid waste sources include replaced mechanical seals, seal packing, rupture discs, and valves. Neither the volume of this waste nor its degree of potential environmental hazard is expected to be significant.

7.5 ENERGY IMPACT

The blanketing and venting systems are essentially passive control techniques; the only energy required for their operation is heat to

prevent vapor freezing in some of the blanketing and vent lines. The energy to heat these pipes could come from electrical heating tape or steam tracing. The pipes would be insulated to reduce the energy requirements.

Table 7-5 summarizes the energy requirements that were assumed for the gas blanketing and wash-oil scrubber control options described in Chapter 6 and costed in Chapter 8. Steam estimates include amounts needed for pipe heat tracing. The modest amount of steam could be available from low-pressure waste steam currently vented.

A major energy impact for the control technology is the electrical power for the wash-oil final cooler. Alternatively, if tar-bottom final cooling is used, the electrical consumption is much lower. This altered consumption results from differences between wash oil's and water's heat capacities and heat transfer coefficients and because a tar bottom (mixer-settler) is add-on instead of entire replacement equipment.

The major energy impact of the control options is the potential for recovering large amounts of benzene and other organic compounds that otherwise would be released to the atmosphere. The light aromatics are important because their uses include fossil fuel replacement and gasoline additives.

Several of the coke oven by-product plant sources that emit benzene also emit coke oven gas (methane and hydrogen). The amount of coke oven gas emitted could be substantially greater than the amount of benzene emissions. Table 7-6 summarizes process unit coke oven gas emissions that could be recovered as a result of recycle of these gases back to the coke oven gas.

Table 7-6 does not include an estimate of the coke oven gas lost from other potential sources at by-product plants. If recovery of 21.3 ℓ of gas/min/Mg of coke/day (see Table 7-6) is assumed, the national energy savings from the recovered coke oven gas would be approximately 36,100 TJ/yr (0.034 quad/yr).

TABLE 7-5. ENERGY USE AT A MODEL BY-PRODUCT PLANT (4,000 Mg coke/day)

User	Steam (Mg/yr)	Electricity (MWh/yr)
Gas blanketing		
Tar decanter, tar-intercepting sump, and flushing-liquor circulation tank	350	-
Tar dewatering, tar storage	440	-
Light-oil storage	107	
Excess-ammonia liquor tank	128	-
Condenser, light-oil decanter, wash-oil decanter, and circulation tank	176	-
Wash-oil scrubber		
Excess-ammonia liquor tank	60	10
Light-oil storage	60	10
Final cooler		
Tar-bottom final cooler	-	85
Wash-oil final cooler	-	2,020

TABLE 7-6. EMISSIONS OF COKE OVEN GAS FROM SELECTED COKE OVEN BY-PRODUCT PLANT SOURCES[1]

Sources	Emissions (ℓ gas/min/Mg coke/day)
Tar decanter	11.0
Light-oil condenser	0.2
Tar dehydrator	4.6
Tar storage	5.5

7.6 OTHER ENVIRONMENTAL IMPACTS

The control options would have improve the general appearance of by-product plant operations because they would tend to eliminate aesthetically displeasing phenomena such as water vapor plumes from process vents and naphthalene precipitation from air, and they might reduce some of the odors emitted from some process steps. Other environmental considerations, such as noise level, are not expected to be influenced by the control options.

7.7 IRREVERSIBLE AND IRRETRIEVABLE COMMITMENT OF RESOURCES

The control options do not involve a tradeoff between short-term environmental gains at the expense of long-term environmental losses. The control options do not result in irreversible and irretrievable commitment of resources. As a result of the control options, resources such as light aromatic hydrocarbons are recovered, and emissions from affected sources are essentially eliminated.

7.8 IMPACT OF DELAYED STANDARDS

Delay of the standard will not significantly impact water pollution, solid waste disposal, or energy. A delay will result in continued air pollution at or above the level of national baseline benzene emissions (see Table 7-1). The health impact from control at this level (described in Appendix E) would continue throughout the delay.

7.9 REFERENCES

1. VanOsdell, D.W. Environmental Assessment of Coke By-Product Recovery Plants. U.S. Environmental Protection Agency. Research Triangle Park, NC. Publication No. EPA-600/2-79-016. January 1979.

2. Branscome, M. R., Summary of VOC and Total Organic Estimates for Coke By-Product Recovery Plants. Research Triangle Institute. Research Triangle Park, NC. July 11, 1983.

3. Hydrocarbon Pollutants from Stationary Sources. U.S. Environmental Protection Agency. Research Triangle Park, NC. Publication No. EPA-600/7-77-110. September 1977.

4. Geacintov, N. E. Reactivity of Polynuclear Aromatic Hydrocarbons with O_2 and NO in the Presence of Light. U.S. Environmental Protection Agency. Research Triangle Park, NC. Publication No. EPA-650/1-74-010. 1973.

5. Bufalini, J., and A. Altshuller. Kinetics of Vapor-Phase Hydrocarbon-Ozone Reactions. Canadian Journal of Chemistry. 43, 1965. pp. 2243-2250.

6. Tebbens, B., J. Thomas, and M. Mukai. Fate of Arenes Incorporated with Airborne Soot. American Industrial Hygiene Association Journal. September-October 1966. pp. 415-422.

7. Coke By-Product Emissions Evaluation Briefing. Scott Environmental Services. November 1980.

8. COSTS

8.1 COST ANALYSIS OF REGULATORY ALTERNATIVES

This chapter contains cost estimates of implementing various controls for benzene at existing and new by-product plants. Costs of process modifications and add-on controls are presented for each of the hazardous pollutant sources considered for regulation. The cost analysis assumes that each source is uncontrolled and applies the controls to the sources at each model plant. Not all by-product plants will incur all of the costs described in this section because the types of pollution sources differ among the various plants. Control costs are presented in terms of total capital cost and total annualized cost and their components.

Control costs for a particular plant are estimated according to its coke capacity; a linear correlation between control cost and coke capacity was obtained from the cost estimates for the three model plants. Nationwide control requirements are estimated on an individual plant basis, according to available information on process sources and coke capacity. Nationwide capital and annualized control costs are presented in Subsection 8.1.4 for existing coke oven by-product plants.

Controls were selected for major air emission sources for coke oven by-product plants and are described in Chapter 4. The special process characteristics of the by-product plants were used to identify cost-effective controls through implementation of various recycle techniques. By-product plants have sources of gas for blanketing and existing pressure control on the collecting main and gas holder for the blanket gas. These characteristics permit implementation of relatively inexpensive and effective controls.

Subsection 8.1.1 gives the cost analysis for control of benzene sources for existing by-product plants. The control method most frequently advocated for the sources is blanketing with raw coke oven gas from the collecting main or blanketing with clean coke oven gas from the gas holder, both under a slight, positive pressure. As discussed in Chapter 4, gas blanketing generally achieves essentially complete control at less cost than do condensers, absorbers, or incinerators, which achieve only partial control.

8.1.1 Existing Facilities

8.1.1.1 Rationale. The number of process units, tanks, and other emission points for the three model plants is given in Table 8-1 and was estimated from industry surveys and plant trips. A range of cost estimates is provided for each model plant and is based on a range of plant types and layouts. Because piping incurs a major portion of cost for gas blanketing systems, a range of piping distances is used for each model plant. These piping distances are based on plant layout data from four plants and include two relatively compact plants (Armco, Inc., in Houston and Bethlehem Steel Corporation in Sparrows Point) and two plants that are comparatively spread out (U.S. Steel Corporation in Fairfield and Fairless Hills).

Costs of gas blanketing and wash-oil scrubber systems are based on designs that have been applied by the industry (see Chapter 4). Much of the design data were obtained from systems installed at Armco, Inc., Houston Works, by the Engineering and Construction Division of Koppers Company, Inc., a major builder of coke ovens and by-product recovery plants.

To consider site-specific factors, EPA visited several by-product plants that had installed some form of gas blanketing. In addition, personnel visited the U.S. Steel Fairless Works to examine potential difficulties in retrofitting a gas blanketing system in a plant with long pipe runs. EPA consultants toured the plant and examined its layout, existing piping and supports, operating parameters, and relevant construction blueprints. Extensive data on tank dimensions, pumping rates, piping distances, and pipe supports were obtained to develop a

TABLE 8-1. NUMBER OF UNITS AT THE MODEL PLANTS

Process equipment	Number of units		
	Model Plant 1	Model Plant 2	Model Plant 3
Tar decanter	2	3	6
Flushing-liquor circulation tank	1	2	3
Tar-intercepting sump	1	1	2
Tar-dewatering tank	1	2	4
Tar-collecting, storage tank	4	8	12
Light-oil storage tank	2	6	9
Light-oil condenser	3	3	3
Light-oil sump	1	1	2
Light-oil decanter	1	1	2
Wash-oil circulation tank	1	2	4
Wash-oil decanter	1	2	4
Excess-ammonia liquor storage tank	1	3	6
Pure benzene storage tank	0	0	3

detailed construction cost estimate. The Fairless Works' estimate is provided in Appendix F and was used to derive unit costs for many of the items required for the model plants.

Major capital cost items, their unit cost, and the origin of the estimate are summarized in Table 8-2. Annualized cost items are listed in Table 8-3. In the following subsections, these unit costs are applied to model plants for each emission point, or group of emission points, to generate a range of capital and annualized costs for each model. Annual light-oil recovery credits are subtracted from annualized costs to determine net or total annualized costs. Recovery credit is based on recovering additional light oil or, for cases of venting to the gas holder, light oil's fuel value. Recovery credits are expected to be conservative because no credit is estimated for recovery or additional fuel value for organics other than light oil. Available data are too sparse to estimate accurately the quantity, composition, and value of these organics; but the limited data show that the quantity of other organics could be significant. These other organics vary in composition with the emission point and include such compounds as hydrogen, methane, ethane, toluene, xylene, naphthalene, and tars. Best available estimates of the quantity and value of these other organics based on available data are summarized in Appendix F.3.

8.1.1.2 Tar Decanter, Tar-Intercepting Sump, and Flushing-Liquor Circulation Tank. The costs of controlling these sources were calculated by grouping the sources because they are generally located close to each other. The costs include covering and sealing the tar decanter and sump and blanketing all of these vessels with coke oven gas from the collecting main. Pressure control would be provided by the Askania regulator, which maintains collecting main pressure at 5 to 10 mm of water. Discussions with plant operators indicated that pressure control in the collecting main is inherently reliable. High-pressure excursions sound an alarm and open emergency bleeder stacks to vent the excess. Low pressure is avoided because of potential damage to the coke ovens and oxygen infiltration. When necessary, an operator will control the Askania manually to maintain the desired collecting main pressure.

TABLE 8-2. CAPITAL COST ITEMS (1982 Dollars)

Item	Description	Cost/unit	Reference
Capital cost factors	Construction fee	10% of capital	1
	Contingency	15% of capital	1
	Engineering	15% of capital	1
	Startup	1% of capital	1
Cover decanter and sumps	Clean, cover, and seal 22 m^2 (240 ft^2) for $7,800	355/m^2 (32.5/ft^2)	2,3[a]
	Clean, cover, and seal 52 m^2 (560 ft^2) for $16,000	308/m^2 (28.6/ft^2)	2,3[b]
Fittings[c]	20-cm (8-in.) pipe	20/m (6.1/ft)	d
	15-cm (6-in.) pipe	16/m (5.0/ft)	d
	15-cm (6-in.) pipe, light-oil plant	26/m (7.8/ft)	d
	10-cm (4-in.) pipe, light-oil plant	15/m (4.6/ft)	d
	7.6-cm (3-in.) pipe	6.9/m (2.1/ft)	d
	7.6-cm (3-in.) pipe, light-oil plant	13/m (4.1/ft)	d
Flame arrestors	For 15-cm (6-in.) vent	1,870	e
	For 7.6-cm (3-in.) vent	920	e
Instrumentation	Flow rate, pressure, temperature	1,300	f
Performance test	200 to 300 person-hours	8,000	g
Pipe (straight)	20 cm (8 in.)	138/m (42.1/ft)	2[h]
	15 cm (6 in.)	109/m (33.2/ft)	2[h]
	15 cm (6 in.), light-oil plant	185/m (56.4/ft)	2[h]
	10 cm (4 in.), light-oil plant	126/m (38.4/ft)	2[h]
	7.6 cm (3 in.)	46.6/m (14.2/ft)	2[h]
	7.6 cm (3 in.), light-oil plant	102/m (31.0/ft)	2[h]
	8.1 cm (2 in.)	30.7/m (9.36/ft)	2[h]
	2.5 cm (1 in.)	20.2/m (6.17/ft)	2[h]
Pipe columns	For piping support	1,500	i
Pressure controller	For 7.6-cm (3-in.) line	3,400	j
	For 15-cm (6-in.) line, with backup	12,600	k
Pressure reducer	For 7.6-cm (3-in.) line	525	l
Pressure tap	Equipment rental	4,500/15 days	m
	Labor and materials	1,750/tap	m
Pump	2.2 ℓ/s (35 gal/min), 2 hp	2,570	n
Scrubber shell	7.2 m^2 (77 ft^2) at $1,530	214/m^2 (20/ft^2)	o
	22 m^2 (240 ft^2) at $5,000	226/m^2 (20.8/ft^2)	p

Footnotes on last page of table.

(continued)

TABLE 8-2. (continued)

Item	Description	Cost/unit	Reference
Steam trace, insulation	20-cm (8-in.) line	122/m (37.1/ft)	2[q]
	15-cm (6-in.) line	68/m (20.7/ft)	2[q]
	15-cm (6-in.) line, light-oil plant	86/m (26.1/ft)	2[q]
	10-cm (4-in.) line, light-oil plant	70/m (21.3/ft)	2[q]
	7.6-cm (3-in.) line	45.6/m (13.9/ft)	2[q]
	7.6-cm (3-in.) line, light-oil plant	62/m (18.9/ft)	2[q]
Valves	20-cm (8-in.) plug	1,020	2[r]
	15-cm (6-in.) plug	620	2[r]
	15-cm (6-in.) 3-way, light-oil plant	1,770	2[r]
	7.6-cm (3-in.) 3-way, light-oil plant	730	2[r]
	5.1-cm (2-in.) gate	157	2[r]
	2.5-cm (1-in.) vent	170	2[r]
	2.5-cm (1-in.) gate	75	2[r]
	1.3-cm (0.5-in.) gate	24	2[r]

[a]Derived from Appendix F. Includes installing seal plate, gaskets, welds, access openings, blanking lines, removing existing cover, and cleaning tank.

[b]Derived from Appendix F. Based on replacing 52-m^2 (560-ft^2) primary cooler (tar) decanter top and includes blanking lines; removing concrete cover; cleaning; installing steel plate, supports, access openings, and vent pipe; and welding.

[c]Fittings include els, tees, reducers, and flanges.

[d]Cost of fittings derived from Appendix F, which contains detailed construction estimate for one plant. Based on costs of fittings per meter of pipe for this design.

[e]From Groth Equipment Company; see Appendix F.

[f]Includes flowmeter with low flow alarm with 2.5-cm (1-in) flange connections ($787), stainless steel pressure indicator ($90), temperature gauge ($164) from distributor for Brooks Instruments Division, Charlotte, NC. Installation cost of $130 per instrument is used.

[g]Includes presurvey, setup, laboratory preparation, analysis, report preparation, travel, and per diem expenses.

[h]Installed capital cost derived from Reference 2 with details in Appendix F. Includes installation premium for area where continuing operations may interfere with work progress. For the light-oil plant, includes cost premium for flanged pipe and installation premium for work in a hazardous area. Costs for 2.5-cm (1-in.) and 5.1-cm (2-in.) pipe include fittings. All pipe is Schedule 40.

[i]From Appendix F.

[j]Includes a pressure sensor, control valve, and alarm; from BGV Controls, Inc., distributor for Fisher Controls, Charlotte, NC.

[k]From Appendix F. Includes two Garlock "Gar-Seal" 100 butterfly valves, Teflon-coated surfaces including disc and valve liner, two General Torque valve actuators, chemical seal, and Robertshaw digital control modules with electronic differential pressure transmitter and electropneumatic relays.

[l]Reduces gas supply pressure to 380 to 460 mm (15 to 18 in.) of water; from BGV Controls, Inc., distributor for Fisher Controls, Charlotte, NC.

[m]From Appendix F. Estimate provided by the Mueller Company.

[n]From Appendix F. Pumps rated as 2.2 ℓ/s at 23-m head (35 gal/min at 75 ft) with a 2-hp motor. Cost includes pump ($1,350), foundation ($390), and electrical ($830).

[o]The design is for a flow of 0.15 m^3/s (310 ft^3/m) and wash-oil rate of 0.3 ℓ/s (4.3 gal/min). The shell is a pipe with a 0.5-m (1.5-ft) diameter and a 4.9-m (16-ft) length. See Appendix F.

[p]The design is for a flow of 0.6 m^3/s (1,200 ft^3/m) and a wash-oil rate of 2.24 ℓ/s (35 gal/min). The shell is a pipe with a 0.9-m (3-ft) diameter and a 7.3-m (24-ft) length. See Appendix F.

[q]Derived from Reference 2 in Appendix F. Includes 1.3-cm (0.5-in.) Schedule 80 pipe, valves, steam traps, insulation, and stainless steel jacket. Hazardous area installation premium included for the light-oil plant. Insulation is 5.1 cm (2 in.) thick for 15-cm (6-in.) pipe, 3.8 cm (1.5 in.) thick for 7.6- or 10-cm (3- or 4-in.) pipe, and 2.5 cm (1 in.) thick for the steam supply line.

[r]Derived from Reference 2 in Appendix F. Includes hazardous area installation premium in the light-oil plant.

TABLE 8-3. ANNUALIZED COST ITEMS
(1982 Dollars)

Item	Cost	Reference
Benzene credit, as fuel	$0.15/kg	4,5[a]
Benzene credit, recovered	$0.47/kg	6
Capital recovery (10 years at 10%)	16.3% of capital	7
Electricity	$0.04/kWh	4[b]
Light-oil credit	$0.33/kg	c
Maintenance	5% of capital	8
Nitrogen (storage and supply)	$0.27/m^3 (0.76/100 ft^3)	d d
Overhead	80% of labor	8
Steam	$17.6/Mg	4[e]
Taxes, insurance, and administration	4% of capital	8

[a]Fuel value is based on underfire gas at $2.76 per million Btu's from Reference 4 in 1979 dollars ($4.00 per million Btu's in 1982 dollars); a fuel content of 17,500 Btu's/lb in Reference 5.

[b]Adjusted from value of $0.027/kWh (1979 dollars) in Reference 4.

[c]A light-oil credit equal to 70 percent of the benzene value is used. In Reference 4, the 1979 value of light oil was given as $0.77/gal and the value of benzene as $1.15/gal.

[d]Includes rental of 5.7-m^3 (1,500-gal) liquid nitrogen storage tank, vaporizer, controls, and nitrogen. Estimate provided by National Welders Supply Company, Inc., Raleigh, NC.

[e]Adjusted from value of $12/Mg ($5.44/1,000 lb) in 1979 dollars in Reference 4.

The major cost elements for the blanketing system include covering and sealing the decanter and sump, installing a pressure tap upstream of the Askania, and adding the steam-traced and insulated piping to route emissions to the collecting main. Costs for covering and sealing include removing the existing concrete top; blanking the lines; cleaning, inspecting, and repairing the tank; installing steel plate, supports, and gaskets; welding; and adding access openings and a vent pipe. The tar decanter is sealed by a water seal plate near the sludge conveyor discharge, as illustrated in Figure 8-1. The majority of the liquid surface is blanketed with gas from the collecting main and the remainder (approximately 13 percent) provides clearance for the sludge conveyor and is open to the atmosphere.

A 20-cm (8-in.)-diameter vent line is used to carry the blanketing gas and to route displaced emissions to the collecting main. The large-diameter line is used to lower the pressure drop in the vent line and, consequently, to minimize pressure on the tar decanter. Included with the vent line is a 1.3-cm (0.5-in.) line for steam tracing, 5.1 cm (2 in.) of fiberglass insulation, and a stainless steel protective jacket. The steam tracing should avoid condensation and accumulation in the vent lines. However, vent and drain connections are provided for steaming out the line should the need arise.

Each vessel is equipped with three-way cast iron lubricated plug valves to prevent sticking because of tar deposits. Valve connections are arranged so that in one position the tank is vented to the collecting main and in the other position the tank is vented to the atmosphere. This arrangement permits the blanketing line and/or the tank(s) to be isolated for performing maintenance and ensures that the tank is vented at all times. In either position, the plug valve provides a clear opening for the passage of vapors and does not have pockets where tar may accumulate and interfere with the opening and closing of the valve.

Capital and annualized cost estimates are summarized in Table 8-4. A range of piping distances is given for each model plant to represent variations in plant layouts. Some plants will be able to use an

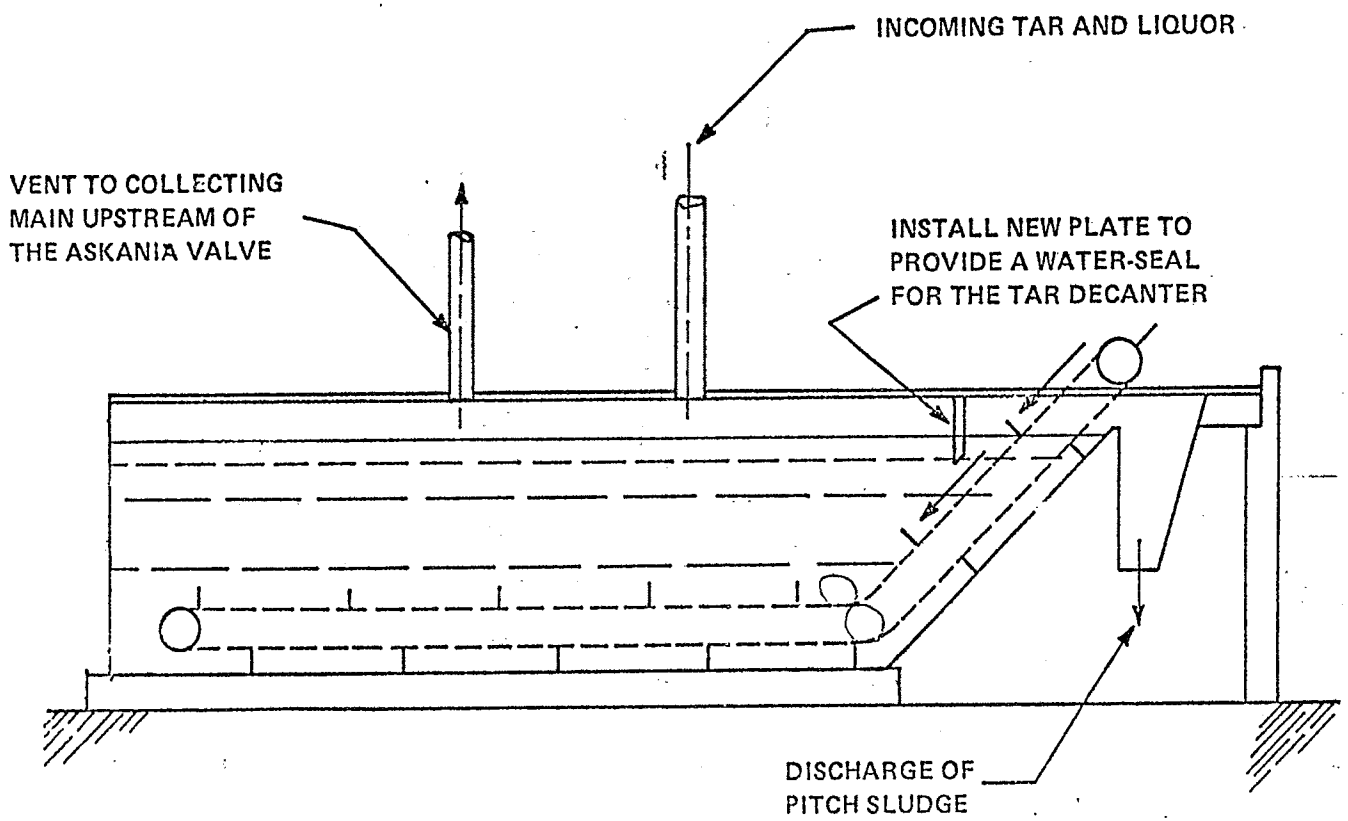

Figure 8-1. Tar decanter.

TABLE 8-4. COSTS FOR GAS BLANKETING OF TAR DECANTER, TAR-INTERCEPTING SUMP, AND FLUSHING-LIQUOR CIRCULATION TANK
(All Costs in 1982 Dollars)

Cost element	Model Plant 1		Model Plant 2		Model Plant 3		Cost per unit
	Minimum	Maximum	Minimum	Maximum	Minimum	Maximum	
Pressure taps	1	1	1	1	1	1	4,000[a]
20-cm (8-in.) pipe, m	61	122	91	366	183	457	280[b]
(ft)	(200)	(400)	(300)	(1,200)	(600)	(1,500)	(85.3)[b]
7.6-cm (3-in.) pipe, m	46	91	46	91	91	183	99.1[c]
(ft)	(150)	(300)	(150)	(300)	(300)	(600)	(30.2)[c]
Pipe supports	0	11	0	21	0	32	1,500[d]
Three-way valves	4	4	6	6	10	10	1,660
20-cm (8-in.) plug valve	1	1	1	1	1	1	1,020
Clean, cover, seal decanter, m^2	0	149	0	223	0	446	327[e]
(ft^2)	(0)	(1,600)	(0)	(2,400)	(0)	(4,800)	(30.5)[e]
Clean, cover, seal sump, m^2	3.0	3.0	23	23	46	46	328[e]
(ft^2)	(32)	(32)	(250)	(250)	(500)	(500)	(30.5)[e]
Capital cost	34,200	121,000	52,700	239,000	97,100	377,000	
Total capital cost[f]	48,300	171,000	74,300	337,000	137,000	532,000	
Annualized costs							
Maintenance, overhead[g] (9%)	4,300	15,000	6,700	30,000	12,000	48,000	
Utilities[h]	1,900	3,800	2,600	9,700	5,300	12,800	
Taxes, insurance (4%)	1,900	6,800	3,000	13,000	5,500	21,000	
Capital recovery[i] (16.3%)	7,900	28,000	12,000	55,000	22,000	87,000	
Total annualized cost	16,000	53,600	24,300	108,000	44,800	169,000	
Light-oil credit[j]	30,100	30,100	121,000	121,000	271,000	271,000	
Annualized cost	(14,100)	23,500	(96,700)	(13,000)	(226,000)	(102,000)	
Benzene reduction (Mg/yr)	63.9	63.9	256	256	575	575	
Cost effectiveness ($/Mg)	(220)	370	(380)	(50)	(390)	(180)	

[a]From Table 8-2; one-half of rental ($2,250) plus labor and materials ($1,750).

[b]From Table 8-2; includes installed pipe ($138/m or $42.1/ft), fittings ($20/m or $6.10/ft), steam tracing, and insulation ($122/m or $37.1/ft).

[c]From Table 8-2; includes installed pipe ($46.6/m or $14.2/ft), fittings ($7.0/m or $2.13/ft), steam tracing, and insulation ($45.6/m or $13.9/ft).

[d]Assumes some plants may add pipe supports for 25 percent of pipe; one column each 6.1 m (20 ft) for 20-cm (8-in.) pipe and each 3.7 m (12 ft) for 7.6-cm (3-in.) pipe.

[e]Assumes some plants have existing covers and others do not. The cost is averaged from Table 8-4 ($346/$m^2$ or $32.5/$ft^2$ and $308/$m^2$ or $28.6/$ft^2$).

[f]Total capital cost includes construction fee (10 percent), contingency (15 percent), engineering (15 percent), and startup (1 percent).

[g]Maintenance and overhead are 5 and 4 percent of capital, respectively.

[h]Steam at $17.6/Mg.

[i]Capital recovery factor for 10-year lifetime at 10 percent.

[j]Light-oil credit at $0.33/kg ($0.15/lb).

existing cover on the decanter and sump, while others must install a new cover and seal. For some plants, the piping may be run on the racks supporting the flushing-liquor line, and in other cases new pipe supports may be required. Both of these conditions are included in minimum and maximum estimates for the model plants.

8.1.1.3 Excess Ammonia Liquor Tanks. Two control options were considered for emissions from the excess ammonia liquor storage tanks: gas blanketing and wash-oil scrubbers. Depending upon the location of the storage tanks, a blanket of coke oven gas from either the collecting main or gas holder can be used to control emissions. The cost estimate provided in Table 8-5 includes a range of piping distances to generate a range of costs for each model plant. The system's design features are similar to those described in Subsection 8.1.1.2.

The cost of a wash-oil vent scrubber is provided in Table 8-6. The design is based on each tank venting at a rate of 0.013 m^3/s (200 gal/min) and the scrubber shell requirements discussed in Appendix F. For Model Plant 2, the wash-oil rate would be approximately 0.1 ℓ/s (1.6 gal/min) and the scrubber shell would be 0.3 m (1 ft) in diameter and 3.7 m (12 ft) in length. Wash oil would be supplied through an uninsulated 2.5-cm (1-in.) line and would be removed through a 5.1-cm (2-in.) drain line. A range of piping distances is given for each model plant. In addition, pumps may be required at some plants to move the wash oil, and other plants may use existing wash-oil pumps and gravity drain to recycle the wash oil.

8.1.1.4 Light-Oil Plant. The light-oil plant processes benzolized wash oil from the wash-oil scrubbers, recovers the light oil, and recycles the wash oil. Some plants produce only the crude light oil, others refine the light oil into primary and secondary light oil, and a few plants refine it further to produce pure benzene. The major equipment items emitting benzene in the light-oil plant are the light-oil condenser, wash-oil decanter, and wash-oil circulation tank. (Product storage tanks are discussed separately in Subsection 8.1.1.5).

The control technology discussed in Chapter 4 for the light-oil plant is gas blanketing with clean coke oven gas from the gas holder

TABLE 8-5. COSTS FOR GAS BLANKETING AMMONIA LIQUOR STORAGE TANKS (All Costs in 1982 Dollars)

Cost element	Model Plant 1		Model Plant 2		Model Plant 3		Cost per unit
	Minimum	Maximum	Minimum	Maximum	Minimum	Maximum	
15-cm (6-in.) vent pipe, m (ft)	46 (150)	152 (500)	61 (200)	183 (600)	91 (300)	305 (1,000)	193[a] (58.9)[a]
Three-way valves	1	1	3	3	6	6	1,660
15-cm (6-in.) plug valve	1	1	1	1	1	1	620
Pipe supports	0	7	0	9	0	15	1,500[b]
Capital cost	11,100	42,200	17,400	54,400	28,300	92,000	
Total capital cost[c]	15,700	59,500	24,500	76,800	39,800	130,000	
Annualized costs							
Maintenance, overhead (9%)[d]	1,400	5,400	2,200	6,900	3,600	12,000	
Utilities[e]	840	2,800	1,100	3,400	1,600	5,600	
Taxes, insurance (4%)	630	2,400	1,000	3,100	1,600	5,200	
Capital recovery (16.3%)[f]	2,600	9,700	4,000	12,500	6,500	21,000	
Total annualized cost	5,470	20,300	8,300	25,900	13,300	43,800	
Light-oil credit[g]	1,500	1,500	6,000	6,000	13,700	13,700	
Annualized cost	3,970	18,800	2,300	19,900	(400)	30,100	
Benzene reduction (Mg/yr)	3.22	3.22	12.8	12.8	29.0	29.0	
Cost effectiveness ($/Mg)	1,200	5,800	180	1,600	(14)	1,040	

[a]From Table 8-2; includes installed pipe ($109/m or $33.2/ft), fittings ($16/m or $5.00/ft), steam tracing, and insulation ($68/m or $20.7/ft).

[b]Assumes some plants may add pipe columns for 25 percent of pipe; one column each 5.2 m (17 ft) for 15-cm (6-in.) pipe.

[c]Total capital cost includes construction fee (10 percent), contingency (15 percent), engineering (15 percent), and startup (1 percent).

[d]Maintenance and overhead are 5 and 4 percent of capital, respectively.

[e]Steam at $17.6/Mg.

[f]Capital recovery factor for a 10-year lifetime at 10 percent.

[g]Light-oil credit at $0.33/kg ($0.15/lb).

TABLE 8-6. COSTS FOR WASH-OIL VENT SCRUBBER FOR AMMONIA LIQUOR STORAGE TANKS (All Costs in 1982 Dollars)

Cost element	Model Plant 1		Model Plant 2		Model Plant 3		Cost per unit
	Minimum	Maximum	Minimum	Maximum	Minimum	Maximum	
Scrubber shell, m^2 (ft^2)	2.6 (28)	2.6 (28)	3.4 (37)	3.4 (37)	4.6 (50)	4.6 (50)	226 (21)
7.6-cm (3-in.) vent pipe, m (ft)	9.1 (30)	9.1 (30)	46 (150)	46 (150)	91 (300)	91 (300)	46.6 (14.2)
2.5-cm (1-in.) wash-oil line, m (ft)	30.5 (100)	152 (500)	61 (200)	152 (500)	122 (400)	305 (1,000)	20.2[a] (6.17)[a]
5.1-cm (2-in.) wash-oil drain, m (ft)	30.5 (100)	152 (500)	61 (200)	152 (500)	122 (400)	305 (1,000)	30.7[a] (9.36)[a]
7.6-cm (3-in.) vent valves	1	1	3	3	6	6	730
Pumps	0	2	0	2	0	3	2,570[b]
Instrumentation	1	1	1	1	1	1	1,300[c]
Performance test	1	1	1	1	1	1	8,000
Capital cost	12,600	24,000	17,500	27,300	25,200	42,200	
Total capital cost[d]	17,800	33,800	24,700	38,500	35,500	59,500	
Annualized costs							
Maintenance, overhead (9%)[e]	1,600	3,000	2,200	3,500	3,200	5,400	
Utilities[f]	-	150	-	290	-	510	
Taxes, insurance (4%)	710	1,400	990	1,500	1,400	2,400	
Operating labor[g]	4,200	4,200	4,200	4,200	4,200	4,200	
Capital recovery (16.3%)[h]	2,900	5,500	4,000	6,300	5,800	9,700	
Total annualized cost	9,400	14,300	11,400	15,800	14,600	22,200	
Light-oil credit[i]	1,400	1,400	5,600	5,600	12,500	12,500	
Annualized cost	8,000	12,900	5,800	10,200	2,100	9,700	
Benzene reduction (Mg/yr)	2.96	2.96	11.8	11.8	26.6	26.6	
Cost effectiveness ($/Mg)	2,700	4,400	490	860	79	360	

[a]Includes fittings.

[b]Assumes some plants use existing wash-oil supply and gravity drain; other plants require pumps.

[c]Includes flowmeter with alarm ($920), pressure gauge ($120), and temperature gauge ($290).

[d]Total capital cost includes construction fee (10 percent), contingency (15 percent), engineering (15 percent), and startup (1 percent).

[e]Maintenance and overhead are 5 and 4 percent of capital, respectively.

[f]Electricity at $0.04/kWh.

[g]For 30 min/day at $23/hr.

[h]Capital recovery factor for 10-year lifetime at 10 percent.

[i]Light-oil credit at $0.33/kg ($0.15/lb).

or battery underfire system. The gas blanketing technology has been demonstrated in the light-oil plant for at least three by-product recovery plants. Pressure control is provided at 380 to 460 mm (15 to 18 in.) of water by the existing pressure controller on the gas holder. Excess pressure in the gas holder is prevented by a bleeder control valve and, in addition, many gas holders have a water seal that will blow at about 500 mm (20 in.) of water.

The blanketing system consists of a 15-cm (6-in.) header from the gas holder to the light-oil plant with 10-cm (4-in.) vent lines connecting the equipment to the header. All lines are heat traced, insulated, and provided with steam-out connections and drains. Three-way valves allow the tanks to be vented either to the blanket line or to the atmosphere for isolating and maintaining the equipment. Flame arrestors are included in the atmospheric vent lines, although some plants already have flame arrestors in place and others operate routinely without them. A pressure tap will be made either at the gas holder or on the battery underfire gas line.

A range of costs for gas blanketing the light-oil plant is given in Table 8-7 for a range of piping distances at the model plants. Light-oil credit for this system is based on the light oil's fuel value because the light oil is returned to the coke oven gas, which is burned. Some plants with gas blanketing of the light-oil plant have observed decreased sludge formation, which occurs from oxidation reactions with oxygen in the air. No estimates of the credits associated with reduced fouling, reduced maintenance, and reduced hazardous waste disposal costs are available.

8.1.1.5 Light-Oil and BTX Storage Tanks. Two control options were evaluated for emissions from light-oil and BTX product storage tanks: gas blanketing and wash-oil scrubbers. Light-oil storage tanks can be blanketed with clean coke oven gas from the gas holder or battery underfire as described for the light-oil plant (see Subsection 8.1.1.4). For storage tanks that are sufficiently close to the light-oil plant, the same header line from the gas holder may be used for both the light-oil plant and the storage tanks.

TABLE 8-7. COSTS FOR GAS BLANKETING OF LIGHT-OIL CONDENSER, LIGHT-OIL DECANTER, WASH-OIL DECANTER, AND CIRCULATION TANK
(All Costs in 1982 Dollars)

Cost element	Model Plant 1		Model Plant 2		Model Plant 3		Cost per unit
	Minimum	Maximum	Minimum	Maximum	Minimum	Maximum	
Pressure tap	1	1	1	1	1	1	3,550[a]
10- to 15-cm (4- to 6-in.) pipe, m (ft)	61 (200)	183 (600)	122 (400)	244 (800)	183 (600)	305 (1,000)	275[b] (83.8)[b]
Plug valve	1	1	1	1	1	1	620
Three-way valves	6	6	8	8	13	13	730
Flame arrestors	6	6	8	8	13	13	920
Capital costs	30,800	64,400	50,900	84,400	75,900	109,000	
Total capital costs[c]	43,500	90,700	71,800	119,000	107,000	154,000	
Annualized costs							
Maintenance, overhead[d] (9%)	3,900	8,200	6,500	10,700	9,600	13,900	
Utilities[e]	1,000	3,100	2,100	4,100	3,100	5,100	
Taxes, insurance (4%)	1,700	3,600	2,900	4,800	4,300	6,200	
Capital recovery[f] (16.3%)	7,100	14,800	11,700	19,400	17,400	25,100	
Total annualized cost	13,700	29,700	23,200	39,000	34,400	50,300	
Light-oil credit[g]	7,400	7,400	29,600	29,600	66,600	66,600	
Annualized cost	6,300	22,300	(6,400)	9,400	(32,200)	(16,300)	
Benzene reduction (Mg/yr)	34.6	34.6	138	138	311	311	
Cost effectiveness ($/Mg)	180	640	(46)	68	(100)	(52)	

[a]From Table 8-2; equipment rental for 6 days ($1,800) plus labor and materials ($1,750).

[b]Assumes 75 percent of pipe is 15-cm (6-in.) header and 25 percent is 10-cm (3-in.) vent lines. Cost includes installed pipe ($170/m or $51.9/ft), fittings ($23/m or $7.0/ft), steam tracing, and insulation ($81.7/m or $24.9/ft).

[c]Total capital cost includes construction fee (10 percent), contingency (15 percent), engineering (15 percent), and startup (1 percent).

[d]Maintenance and overhead are 5 and 4 percent of capital, respectively.

[e]Steam at $17.6/Mg.

[f]Capital recovery factor for 10-year lifetime at 10 percent.

[g]Light-oil credit of $0.15/kg as fuel.

Gas blanketing costs for light-oil storage tanks are given in Table 8-8 for a range of piping distances at the model plants. The design features are the same as those described for the light-oil plant. In addition, pipe columns are added for the maximum case because a storage tank occasionally may be in a remote location without existing overhead pipe racks. Light-oil credit again is based on its fuel value instead of on the value of recovering light oil.

Costs of a wash-oil vent scrubber are provided in Table 8-9. Design is based on a maximum vent rate of 0.013 m^3/s (200 gal/min) generated from pumping light oil into the tank and the scrubber shell requirements discussed in Appendix F. Wash-oil scrubbers may be an appropriate control for old, vertical storage tanks with a riveted construction. Extensive modifications, such as replacing the roof on the entire tank, may be required to rehabilitate the old, vertical tanks to accept a positive-pressure gas blanket. However, a wash-oil scrubber has a negligible pressure drop and could be installed as a vent control without major tank modifications. The scrubber would be installed beside the tank or mounted on the side of the storage tank.

Wash oil is supplied through an uninsulated 2.5-cm (1-in.) line and would be removed through a 5.1-cm (2-in.) drain line. A range of piping distances is given for each model plant. In addition, pumps may be required at some plants to move the wash oil, and other plants may use existing wash-oil pumps and gravity drain to recycle the wash oil. Wash oil leaving the scrubber would be routed through the light-oil plant for light-oil recovery.

8.1.1.6 Tar-Collecting, Tar Storage, and Tar-Dewatering Tanks. Costs for two control options--gas blanketing and a wash-oil scrubber--were evaluated for tar collecting, storage, and dewatering tanks. A blanket of coke oven gas from the collecting main can be used to control emissions from tar tanks, as described in Subsection 8.1.1.2 for tar decanters. Cost estimates for the model plants are given in Table 8-10 for a range of piping distances. The operational and design features (insulated and heated line, pipe supports, and three-way valves) are the same as those described for the tar decanter. The

TABLE 8-8. COSTS FOR GAS BLANKETING OF LIGHT-OIL AND BTX STORAGE TANKS (All Costs in 1982 Dollars)

Cost element	Model Plant 1		Model Plant 2		Model Plant 3		Cost per unit
	Minimum	Maximum	Minimum	Maximum	Minimum	Maximum	
10- to 15-cm (4- to 6-in.) pipe, m (ft)	18 (60)	152 (500)	18 (60)	213 (700)	61 (200)	244 (800)	275[a] (83.8)[a]
Three-way valves	2	2	6	6	9	9	730
Pipe supports	0	8	0	11	0	12	1,500[b]
Flame arrestors	2	2	6	6	9	9	920
Capital costs	8,300	57,200	14,900	85,100	31,600	99,900	
Total capital costs	11,700	80,700	21,000	120,000	44,600	141,000	
Annualized costs							
Maintenance, overhead[c] (9%)	1,100	7,300	1,900	10,800	4,000	12,700	
Utilities[d]	290	2,500	290	3,500	1,000	4,100	
Taxes, insurance (4%)	500	3,300	840	4,800	1,800	5,600	
Capital recovery[e] (16.3%)	1,900	13,200	3,400	19,600	7,300	23,000	
Total annualized cost	3,790	26,300	6,400	38,700	14,100	45,400	
Light-oil credit[f]	500	500	3,600	3,600	8,000	8,000	
Annualized cost	3,290	25,800	2,800	35,100	6,100	37,400	
Benzene reduction (Mg/yr)	2.08	2.08	16.6	16.6	37.3	37.3	
Cost effectiveness ($/Mg)	1,600	12,000	170	2,100	160	1,000	

[a]Assumes 75 percent of pipe is 15-cm (6-in.) header and 25 percent is 10-cm (3-in.) vent lines. Cost includes installed pipe ($170/m or $51.9/ft), fittings ($23/m or $7.0/ft), steam tracing, and insulation ($81.7/m or $24.9/ft).

[b]Assumes some plants may add pipe columns for 25 percent of pipe. One column each 5.1 m (17 ft) for 15-cm (6-in.) pipe and each 4.3 m (14 ft) for 10-cm (4-in.) pipe.

[c]Maintenance and overhead are 5 and 4 percent of total capital cost, respectively.

[d]Steam at $17.6/Mg.

[e]Capital recovery factor for 10-year lifetime and 10 percent.

[f]Light-oil credit of $0.15/kg as fuel.

TABLE 8-9. COSTS OF WASH-OIL VENT SCRUBBER FOR LIGHT-OIL AND BTX STORAGE TANKS (All Costs in 1982 Dollars)

Cost element	Model Plant 1		Model Plant 2		Model Plant 3		Cost per unit
	Minimum	Maximum	Minimum	Maximum	Minimum	Maximum	
Scrubber shell, m^2 (ft^2)	3.0 (32)	3.0 (32)	4.6 (50)	4.6 (50)	5.9 (64)	5.9 (64)	226 (21)
10-cm (4-in.) vent pipe, m (ft)	15 (50)	15 (50)	91 (300)	91 (300)	137 (450)	137 (450)	196[a] (59.7)[a]
2.5-cm (1-in.) wash-oil line, m (ft)	30.5 (100)	183 (600)	30.5 (100)	213 (700)	61 (200)	244 (800)	20.2[b] (6.17)[b]
5.1-cm (2-in.) wash-oil drain, m (ft)	30.5 (100)	183 (600)	30.5 (100)	213 (700)	61 (200)	244 (800)	30.7[b] (9.36)[b]
Pump	0	2	0	2	0	2	2,570[c]
Vent valves	2	2	6	6	9	9	730
Instrumentation	1	1	1	1	1	1	1,300[d]
Performance test	1	1	1	1	1	1	8,000
Capital cost	16,000	28,900	34,200	48,700	47,200	61,600	
Total capital cost[e]	22,600	40,700	48,200	68,700	66,600	86,900	
Annualized costs							
Maintenance, overhead (9%)[f]	2,000	3,700	4,300	6,200	6,000	7,800	
Utilities[g]	190	380	1,100	1,400	1,600	2,200	
Taxes, insurance (4%)	900	1,600	1,900	2,700	2,700	3,500	
Operating labor[h]	4,200	4,200	4,200	4,200	4,200	4,200	
Capital recovery (16.3%)[i]	3,700	6,600	7,900	11,200	10,900	14,200	
Total annualized cost	11,000	16,500	19,400	25,700	25,400	31,900	
Light-oil credit[j]	900	900	7,200	7,200	16,200	16,200	
Annualized cost	10,100	15,600	12,200	18,500	9,200	15,700	
Benzene reduction (Mg/yr)	1.91	1.91	15.2	15.2	34.3	34.3	
Cost effectiveness ($/Mg)	5,300	8,200	800	1,200	270	460	

[a]Includes installed pipe ($126/m or $38.4/ft) and steam tracing with insulation ($70/m or $21.3/ft).

[b]Includes fittings.

[c]Assumes that some plants use existing wash-oil supply and gravity drain and that other plants require pumps.

[d]Includes flowmeter with alarm ($920), pressure gauge ($120), and temperature gauge ($290).

[e]Total capital cost includes construction fee (10 percent), contingency (15 percent), engineering (15 percent), and startup (1 percent).

[f]Maintenance and overhead are 5 and 4 percent of capital, respectively.

[g]Steam at $17.6/Mg and electricity at $0.04/kWh.

[h]For 30 min/day at $23/h.

[i]Capital recovery factor for 10-year lifetime at 10 percent.

[j]Light-oil credit at $0.33/kg.

TABLE 8-10. COSTS FOR GAS BLANKETING OF TAR COLLECTING, STORAGE, AND DEWATERING TANKS
(All Costs in 1982 Dollars)

Cost element	Model Plant 1		Model Plant 2		Model Plant 3		Cost per unit
	Minimum	Maximum	Minimum	Maximum	Minimum	Maximum	
15-cm (6-in.) pipe, m (ft)	61 (200)	152 (500)	91 (300)	762 (2,500)	122 (400)	914 (3,000)	193[a] (58.9)[a]
Pipe supports	0	7	0	37	0	44	1,500[b]
Three-way valves	5	5	10	10	16	16	1,660
Capital cost	20,100	48,300	34,300	219,000	50,100	269,000	
Total capital cost[c]	28,300	68,000	48,300	309,000	70,700	380,000	
Annualized costs							
Maintenance, overhead (9%)[d]	2,500	6,100	4,300	27,800	6,400	34,200	
Utilities[e]	1,100	2,800	1,600	13,900	2,200	16,700	
Taxes, insurance (4%)	1,100	2,700	1,900	12,400	2,800	15,200	
Capital recovery (16.3%)[f]	4,600	11,100	7,900	50,400	11,500	61,900	
Total annualized cost	9,300	22,700	15,700	104,500	22,900	128,000	
Light-oil credit[g]	5,600	5,600	22,200	22,200	50,000	50,000	
Annualized cost	3,700	17,100	(6,500)	82,300	(27,100)	78,000	
Benzene reduction (Mg/yr)	11.8	11.8	47.2	47.2	106	106	
Cost effectiveness ($/Mg)	310	1,500	(140)	1,700	(260)	740	

[a]Includes installed pipe ($109/m or $33.2/ft), fittings ($16/m or $5.0/ft), steam tracing, and insulation ($68/m or $20.7/ft).

[b]Assumes some plants may add pipe supports for 25 percent of pipe; one column each 5.2 m (17 ft) for 15-cm (6-in.) pipe.

[c]Total capital cost includes construction fee (10 percent), contingency (15 percent), engineering (15 percent), and startup (1 percent).

[d]Maintenance and overhead are 5 and 4 percent of capital, respectively.

[e]Steam at $17.6/Mg.

[f]Capital recovery factor for 10-year lifetime at 10 percent.

[g]Light-oil credit of $0.33/kg ($0.15/lb).

cost of a pressure tap is not included because the 15-cm (6-in.) header for the tar tanks will tie into the gas blanketing line for the tar decanter.

The cost of a wash-oil scrubber for control of emissions from tar-dewatering and tar storage tanks was also examined. Because the vapors from these sources are hot, the vapors must be cooled to obtain a reasonable control efficiency from absorption in the wash oil. A high flow rate of once-through wash oil was considered for these sources to effect both cooling and absorption, but this design could require increasing the existing wash-oil still capacity at some plants. The high wash-oil flow rate would be required because of the heat content of the vapors, primarily from removal of the latent heat of water that is present in the emissions.

An alternate design is presented in Figure 8-2, which is a conceptual design of a wash-oil condenser and scrubber that would require a relatively low usage of wash oil. The design includes a two-zone scrubber in which initial cooling and absorption are accomplished in the bottom zone and additional absorption is accomplished in the top zone. On the scale of Model Plant 2, cooled wash oil would be sprayed into the bottom zone at 16 ℓ/s (250 gal/min), and the wash oil and condensed water would enter the separator. Water would be separated and sent to wastewater treatment. The wash oil from the separator would be circulated through an indirect contact heat exchanger for cooling and then recirculated to the bottom spray zone. A slipstream of wash oil at 0.3 ℓ/s (5 gal/min) would be sent to the light-oil recovery process for removal of organics. Fresh wash oil would be sprayed into the top zone of the scrubber at 0.3 ℓ/s (5 gal/min) to remove benzene vapors, which pass through the cooling section of the scrubber.

The capital cost for this design as applied to Model Plant 2 is given in Table 8-11. Annualized costs for the three model plants are given in Table 8-12. The capital costs for Model Plants 1 and 3 were estimated from Model Plant 2 by scaling the capital cost on the basis of capacity to the 0.6 power.

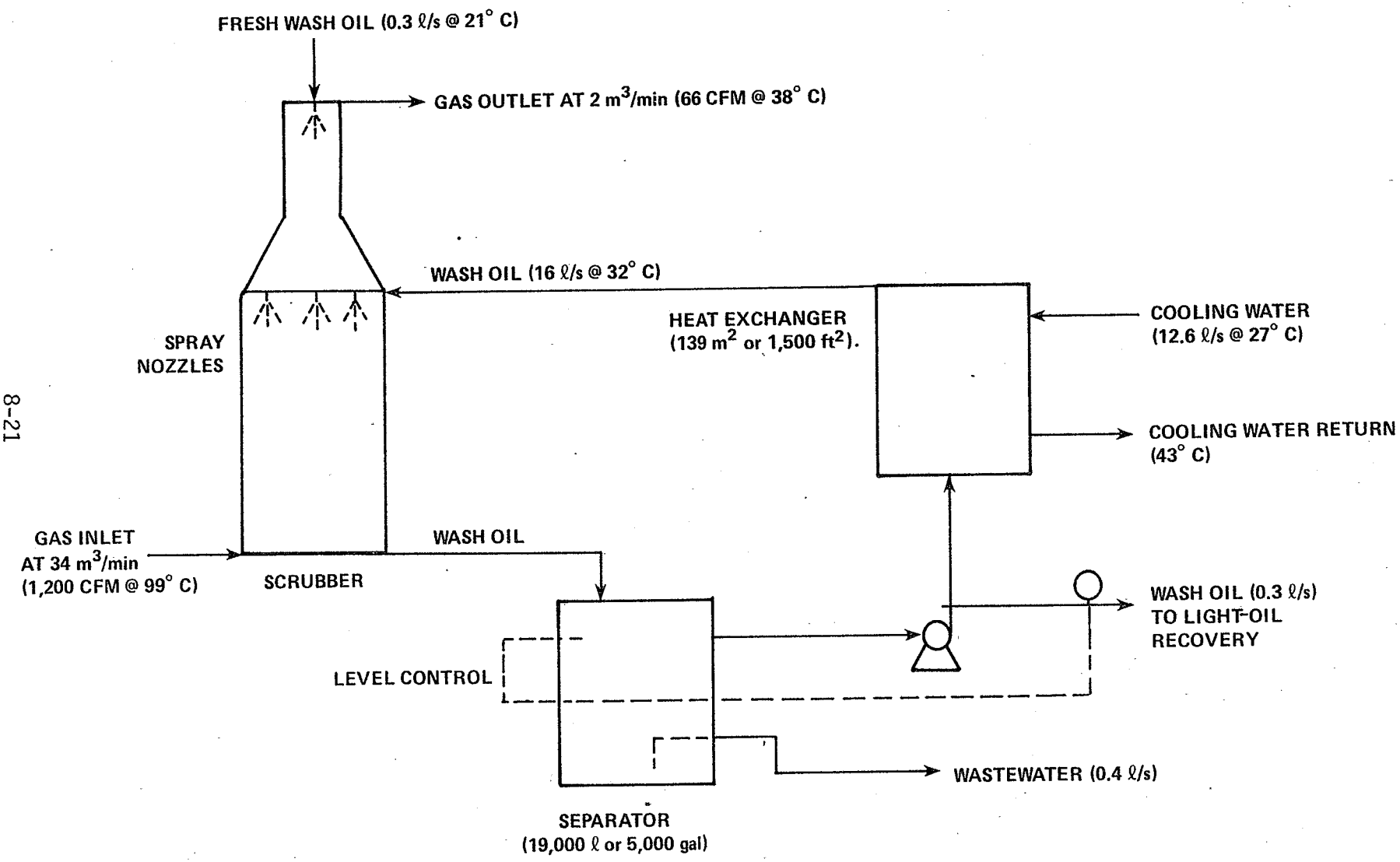

Figure 8-2. Conceptual design of a wash-oil scrubber for tar dewatering and tar storage at Model Plant 2.

TABLE 8-11. CAPITAL COST ESTIMATE FOR A WASH-OIL CONDENSER AND SCRUBBER FOR TAR STORAGE AND DEWATERING-MODEL PLANT 2

Item	Description	Installed capital cost
Heat exchanger	Stainless steel tubes in a carbon steel shell with surface area of 121 m^2 (1,300 ft^2)	62,000[a]
Scrubber	Two-zone stainless steel scrubber with one 5.9-cm (15-in) section and one 12-cm (30-in) section	50,000[a]
Separator	Capacity of 19,000 ℓ (5,000 gal)	32,000[a]
Pump	Rated at 19 ℓ/s (300 gal/min)	10,800[a]
Instrumentation	Flowmeter, pressure, temperature	1,700[b]
Wash-oil pipe	244 m (800 ft) of 2.5-cm diameter (1-in) pipe	4,900[c]
Vent pipe	30 m (100 ft) of 20-cm diameter (8-in) pipe	4,200[d]
Wastewater pipe	30 m (100 ft) of 20-cm diameter (8-in) pipe	4,200[d]
Values and level control	Installed on separator and pump	2,000
Total		172,000
Engineering (20%)		34,400
Field expenses (10%)		17,200
Construction fee (10%)		17,200
Contingency (20%)		34,400
Total capital cost		275,000

[a]Derived from purchased equipment cost in Reference 9 and installation factor in Reference 10.

[b]Includes flowmeter with alarm ($920), two pressure gauges ($120 each), and two temperature gauges ($290 each).

[c]At $20/m ($6.17/ft).

[d]At $138/m ($42/ft).

8.1.1.7 Light-Oil Sump. Emissions from the light-oil sump are controlled by providing a steel sump cover with a vertical vent. The edge of the sump cover rests in a trough around the sump's edge and is sealed with gasket material.

Costs for covering the sump are estimated in Table 8-13 for different sizes of sumps at the model plants. The unit cost for the cover installation is derived in Appendix F and includes replacing the existing cover; blanketing lines; cleaning; adding gasket material; installing the sump cover, supports, and access hatches; and welding.

8.1.1.8 Pure Benzene Storage Tanks. A coke oven gas blanketing system was considered for pure benzene storage tanks, but plant operators indicated that contamination may result from contact of the coke oven gas with pure benzene. This cost analysis is based on supplying a nitrogen or natural gas blanket to pure benzene storage tanks and on returning vented emissions to the gas holder or battery underfire system. Some coke plants that are part of an integrated steel plant may have excess nitrogen available from the oxygen plant associated with steelmaking. Most coke plants have a source of clean natural gas that is used to supplement the coke oven gas; to replace the coke oven gas in emergency situations; or to underfire the coke ovens during startup, idle, or controlled shutdown of the coke battery. The cost analysis also recognizes that a few plants may have neither nitrogen nor natural gas available and would incur an annual expense for purchasing nitrogen.

Costs of gas blanketing controls for pure benzene storage tanks are summarized in Table 8-14 for Model Plant 3. The system design includes a pressure reducer to supply the gas blanket at a pressure of 380 to 460 mm (15 to 18 in.) of water, a pressure controller that will open and vent to the gas holder at pressures over 460 mm (18 in.) of water, three-way valves for isolating tanks, and flame arrestors.

When liquid was pumped out of the storage tank, nitrogen or natural gas would fill the vapor space in the tank. When liquid was pumped into the tank, excess pressure in the vapor space would be vented through the pressure controller to the gas holder. The pressure

TABLE 8-12. ANNUALIZED COST ESTIMATES FOR A WASH-OIL CONDENSER AND SCRUBBER FOR TAR STORAGE AND DEWATERING (1982 dollars)

Cost element	Model Plant 1	Model Plant 2	Model Plant 3
Capital cost	118,000	275,000	448,000
Annualized costs			
Electricity	500	1,000	2,300
Cooling water[a]	5,500	22,000	50,000
Maintenance, overhead (9%)	10,600	24,800	40,300
Taxes, insurance (4%)	4,700	11,000	17,900
Operating labor[b]	4,200	4,200	4,200
Capital recovery (16.3%)[c]	19,200	45,000	73,000
Total annualized cost	44,700	108,000	188,000
Light-oil credit[d]	5,100	20,500	46,000
Annualized cost	39,600	87,500	142,000
Benzene reduction (Mg/yr)	10.8	43.4	97.6
Cost effectiveness ($/Mg)	3,700	2,000	1,500

[a]Based on 13 ℓ/s (200 gal/min) for Model Plant 2 at $0.055/1,000 ℓ ($0.21/1,000 gal) from Reference 4 in 1982 dollars. Flow rates for Model Plants 1 and 3 were scaled from Model Plant 2 based on coke capacity.

[b]For 30 min/day at $23/h.

[c]Capital recovery factor for 10-year lifetime at 10 percent.

[d]Light-oil credit at $0.33/kg ($0.15/lb).

TABLE 8-13. COSTS FOR COVERING LIGHT-OIL SUMP
(All Costs in 1982 Dollars)

Cost element	Model Plant 1		Model Plant 2		Model Plant 3		Cost per unit
	Minimum	Maximum	Minimum	Maximum	Minimum	Maximum	
Clean, cover, and seal, m^2 (ft^2)	3.3 (36)	20.9 (225)	3.3 (36)	93 (1,000)	6.7 (72)	186 (2,000)	32[a] (30.5)[a]
7.6-cm (3-in.) vent pipe, m (ft)	4.6 (15)	4.6 (15)	4.6 (15)	4.6 (15)	9.1 (30)	9.1 (30)	46.6 (14.2)
Capital cost	1,300	7,100	1,300	30,700	2,600	61,400	
Total capital cost[b]	1,850	10,000	1,850	43,300	3,700	86,600	
Annualized costs							
Maintenance, overhead (9%)[c]	170	900	170	3,900	330	7,800	
Taxes, insurance (4%)	70	400	70	1,700	150	3,500	
Capital recovery (16.3%)[d]	300	1,600	300	7,100	600	14,100	
Total annualized cost	540	2,900	540	12,700	1,080	25,400	
Light-oil credit[e]	2,500	2,500	10,100	10,100	22,800	22,800	
Annualized cost	(2,000)	400	(9,600)	2,600	(21,700)	2,600	
Benzene reduction (Mg/yr)	5.37	5.37	21.5	21.5	48.3	48.3	
Cost effectiveness ($/Mg)	(370)	74	(450)	120	(450)	54	

[a]Average from Table 8-2.

[b]Total capital cost includes construction fee (10 percent), contingency (15 percent), engineering (15 percent), and startup (1 percent).

[c]Maintenance and overhead are 5 and 4 percent of capital, respectively.

[d]Capital recovery factor for 10-year lifetime at 10 percent.

[e]Light-oil credit at $0.33/kg ($0.15/lb).

TABLE 8-14. COSTS FOR NITROGEN OR NATURAL GAS BLANKETING OF PURE BENZENE STORAGE TANKS (All Costs in 1982 Dollars)

Cost element	Model Plant 3 Minimum	Model Plant 3 Maximum	Cost per unit
2.5-cm (1-in.) gas supply, m (ft)	30.5 (100)	91.4 (300)	20.2[a] (6.17)[a]
7.6-cm (3-in.) vent pipe, m (ft)	61 (200)	244 (800)	53.5[b] (16.3)[b]
Pressure controller	1	1	4,400[c]
Pressure reducers	2	2	525
Three-way valves	3	3	730
Flame arrestors	3	3	920
Pipe supports	0	10	1,500[d]
Capital costs	14,300	40,300	
Total capital costs[e]	20,100	56,800	
Annualized costs			
Maintenance, overhead (9%)[f]	1,800	5,100	
Utilities[g]	-	15,000	
Taxes, insurance (4%)	800	2,300	
Capital recovery (16.3%)[h]	3,300	9,300	
Total annualized cost	5,900	31,700	
Benzene credit[i]	2,900	2,900	
Annualized cost	3,000	28,800	
Benzene reduction (Mg/yr)	18.7	18.7	
Cost effectiveness ($/Mg)	170	1,500	

[a]Includes fittings.

[b]Includes installed pipe ($46.6/m or $14.2/ft) and fittings ($7.0/m or $2.13/ft).

[c]From Table 8-2; includes pressure sensor, control valve, and alarm.

[d]Assumes some plants may add pipe columns and others may use existing pipe supports.

[e]Total capital cost includes construction fee (10 percent), contingency (15 percent), engineering (15 percent), and startup (1 percent).

[f]Maintenance and overhead are 5 and 4 percent of capital, respectively.

[g]Nitrogen at $0.27/m^3 ($0.76/100 ft^3). Includes rental of 5.7-m^3 (1,500-gal) liquid nitrogen storage tank, vaporizer, and gas usage. Some plants are assumed to have a nitrogen source and others must purchase nitrogen.

[h]Capital recovery factor for 10-year lifetime at 10 percent.

[i]Benzene credit of $0.15/kg as fuel.

setpoint for the pressure controller would be slightly higher than the pressure in the gas holder would be. The benzene vapors would be returned to the coke oven gas that is used as fuel.

Costs of applying a wash-oil vent scrubber to benzene storage tanks are summarized in Table 8-15. The system is analogous to the wash-oil scrubbers previously described. Debenzolized wash oil is sprayed into the top of the scrubber, and the wash oil is drained and returned to the light-oil recovery system.

8.1.1.9 Final Cooler. In standard descriptions of by-product plants, crude naphthalene is recovered from the hot well of the direct-water final cooler.[11] In a new plant, the tar-bottom final cooler might be in one piece. Retrofit costs for an existing plant are based upon the design of a one-stage mixer-settler expending pump work comparable to the extra lift work of the one-piece design. This system also would be suitable for new applications. The following paragraph describes the parameters chosen for the cost estimation and a rationale for their selection.

At a scale of 4,000 Mg of coke per day, with a 20° C increase through the final cooler, approximately 4,800 Mg of water per day contacts a comparable amount of tar. Daily production of whole tar is about 160 Mg; for light tar, which is cleaner and less viscous, daily production is approximately 30 Mg. If the light tar is recirculated from the settler at a rate 100 times the throughput, the effective tar rate is 3,000 Mg/day. If the combined stream is forced through an orifice-plate mixer at a pressure drop of 70 kPa (10 psi), the theoretical pump work is about 5.7 kW (7.6 hp). The electrical load will be about 10 kW and a 15-hp motor should suffice. The settler should provide a residence time of 30 minutes, requiring 300 m^3 (10,000 ft^3), with a vent back to the gas exiting the final cooler. The water will be circulated from the settler to the cooling tower in the usual way, but a pair of small circulating pumps and extra piping are required for the tar circuit. Cost estimates, scaled to the three model plants, are shown in Table 8-16.

TABLE 8-15. COSTS OF WASH-OIL VENT SCRUBBER FOR BENZENE STORAGE TANKS
(All Costs in 1982 Dollars)

Cost element	Model Plant 3 Minimum	Model Plant 3 Maximum	Cost per unit
Scrubber shell, m^2 (ft^2)	3.4 (37)	3.4 (37)	226 (21)
2.5-cm (1-in.) wash-oil line, m (ft)	61 (200)	244 (800)	20.2[a] (6.17)[a]
5.1-cm (2-in.) wash-oil drain, m (ft)	61 (200)	244 (800)	30.7[a] (9.36)[a]
10-cm (4-in.) vent pipe, m (ft)	45.7 (150)	45.7 (150)	126 (38.4)
Vent valves	3	3	730
Flame arrestors	3	3	920
Pump	0	2	2,570[b]
Instrumentation	1	1	1,300[c]
Performance test	1	1	8,000
Capital cost	23,900	38,400	
Total capital cost[d]	33,700	54,100	
Annualized costs			
Maintenance, overhead (9%)[e]	3,000	4,900	
Utilities[f]	-	510	
Taxes, insurance (4%)	1,300	2,200	
Operating labor[g]	4,200	4,200	
Capital recovery (16.3%)[h]	5,500	8,800	
Total annualized cost	14,000	20,600	
Benzene credit[i]	5,700	5,700	
Annualized cost	8,300	14,900	
Benzene reduction (Mg/yr)	17.2	17.2	
Cost effectiveness ($/Mg)	480	870	

[a]Includes fittings.

[b]Assumes some plants use existing wash-oil supply and gravity drain while other plants require pumps.

[c]Includes flowmeter with alarm ($920), pressure gauge ($120), and temperature gauge ($290).

[d]Total capital cost includes construction fee (10 percent), contingency (15 percent), engineering (15 percent), and startup (1 percent).

[e]Maintenance and overhead are 5 and 4 percent of capital, respectively.

[f]Electricity at $0.04/kWh.

[g]For 30 min/day at $23/h.

[h]Capital recovery factor for 10-year lifetime at 10 percent.

[i]Benzene credit at $0.33/kg ($0.15/lb).

TABLE 8-16. COSTS FOR INSTALLING A TAR-BOTTOM FINAL COOLER
(All Costs in 1982 Dollars)

Cost element	Model Plant 1	Model Plant 2	Model Plant 3
Settler[a]	76,000	173,000	280,000
Mixer pumps, drivers[a]	16,000	32,000	43,000
Circulating pumps, drivers[a]	9,300	11,000	12,000
Installed capital cost	101,000	216,000	335,000
Annualized costs			
Maintenance, overhead (9%)[b]	9,100	19,400	30,200
Utilities[c]	900	3,400	7,700
Taxes, insurance (4%)	4,000	8,600	13,400
Capital recovery (16.3%)[d]	16,500	35,200	54,600
Total annualized cost	30,500	66,600	106,000
Light-oil credit[e]	52,800	211,000	475,000
Annualized cost	(22,300)	(144,000)	(369,000)
Benzene reduction (Mg/yr)	112	448	1,010
Cost effectiveness ($/Mg)	(200)	(320)	(370)

[a]Installed costs, derived from Reference 12.

[b]Maintenance and overhead are 5 and 4 percent of capital, respectively.

[c]Electricity at $0.04/kWh.

[d]Capital recovery factor for 10-year lifetime at 10 percent.

[e]Light-oil credit of $0.33/kg ($0.15/lb).

8.1.1.10 Wash-Oil Final Cooler. In principle, benzene emissions from naphthalene handling and the direct final cooler can be eliminated by one device: the wash-oil final cooler. As described in Chapter 4, the cooling fluid is a suitable wash oil directly contacting the coke oven gas. It is as assumed that the use of a suitable wash oil, coupled with the use of appropriate additives and proper operating conditions would permit easy separation of the condensed water from the circulating oil in the system.

The cost estimation for a new system of this kind was furnished by Wilputte in 1977, as reported by VanOsdell.[13] Those numbers, scaled to the three sizes of model plants and escalated to 1982 dollars, are the basis of Table 8-17.

The least certain and, at the largest scale, the most significant cost is for the wash-oil makeup. Although 0.1 percent loss is arbitrary and sounds trivial, at the larger scale it tends to overwhelm the annualized cost.

8.1.1.11 Fugitive Emissions from Equipment Components. This subsection summarizes costs associated with controlling benzene emissions from equipment components that service or contain materials having a benzene concentration of 10 percent or more by weight. Exhausters that handle coke oven gas with over 1 percent benzene also are included. The light-oil recovery and refining processes at by-product recovery plants use pumps, valves, pressure-relief devices, sampling connections, and open-ended lines in benzene (or light-oil) service. Costs are determined by following the methodology established to control volatile organic compounds (VOC's) from the petroleum refinery industry. Details are provided in Appendix F.

Two types of model plants were derived to estimate control costs for equipment components in benzene service. Model Plants 1 and 2 represent the majority of by-product plants that produce light oil (about 70 percent benzene), and Model Plant 3 represents plants that not only recover light oil but also refine it into benzene. The number of equipment items for each model plant is given in Table 8-18 and was derived from plant surveys and questionnaires.

TABLE 8-17. COSTS FOR INSTALLING A WASH-OIL FINAL COOLER
(All Costs in 1982 Dollars)

Cost element	Model Plant 1	Model Plant 2	Model Plant 3
Total capital cost, millions[a]	2.1	4.8	7.9
Annualized costs			
Additional operating labor[b]	40,000	40,000	40,000
Maintenance, overhead (9%)[c]	144,000	430,000	710,000
Makeup wash oil[d]	84,000	335,000	755,000
Utilities[e]	20,200	80,700	181,700
Taxes, insurance (4%)	84,000	190,000	320,000
Capital recovery (16.3%)[f]	340,000	780,000	1,290,000
Total	712,000	1,860,000	3,300,000
Light-oil credit[g]	65,000	260,000	580,000
Annualized cost[g]	647,000	1,600,000	2,720,000
Benzene reduction (Mg/yr)[g]	138	550	1,240
Cost effectiveness ($/Mg)[g]	4,700	2,900	2,200
Light-oil credit[h]	12,000	48,000	108,000
Annualized cost[h]	700,000	1,810,000	3,190,000
Benzene reduction (Mg/yr)[h]	26	102	230
Cost effectiveness ($/Mg)[h]	27,000	18,000	14,000

[a]Updated and scaled from information by Wilputte Corporation in Reference 13.

[b]Labor in addition to that currently used for direct-water or tar-bottom final cooler.

[c]Maintenance and overhead are 5 and 4 percent of capital, respectively.

[d]At 0.1 percent of circulation ($0.11/kg).

[e]Electricity at $0.04/kWh.

[f]Capital recovery factor for 10-year lifetime at 10 percent.

[g]Replaces direct-water final cooler; light-oil credit is $0.33/kg ($0.15/lb).

[h]Replaces tar-bottom final cooler; light-oil credit is $0.33/kg ($0.15/lb).

TABLE 8-18. MODEL PLANTS FOR FUGITIVE BENZENE EMISSIONS FROM EQUIPMENT COMPONENTS

Equipment item	Number of items at each model plant	
	Model Plants 1 and 2[a]	Model Plant 3[b]
Exhausters	6	6
Pump seals	15	30
Valves	105	210
Pressure-relief devices	5	9
Sampling connections	10	21
Open-ended lines	22	45

[a]Model Plants 1 and 2 represent plants that produce light oil only.

[b]Model Plant 3 represents plants that produce light oil and pure benzene.

The cost analysis that was applied to the model plants evaluates inspections, leak detection, repair, and equipment modifications as controls for the equipment in benzene service. Capital cost items are listed in Table 8-19 and were inflated to 1982 dollars at a 10-percent-per-year rate. Total capital costs for the model plants in Table 8-19 were generated by multiplying the cost per item by the number of items for each model as listed in Table 8-18.

Annualized costs for each equipment item and control option are summarized in Table 8-20. Development of these cost estimates is described in detail in Appendix F in 1979 dollars, which were scaled to 1982 dollars at 10 percent per year. Annualized cost of control (inspection, repair, and equipment) was estimated and an annual recovery credit was subtracted to calculate total annualized cost per item shown in Table 8-20 (see Appendix F for calculations). Annualized costs for the two model plants are also summarized in Table 8-20. Total annualized cost was obtained by multiplying the annualized cost per item by the number of items at each plant (Table 8-18). Control techniques expected to save money are denoted as credit by parentheses.

In addition to costs shown in Table 8-20, each model plant would be expected to incur an expense for the monitoring instrument that cannot be attributed to each equipment item. Annualized cost of the monitoring instrument is estimated as $5,000 per year (1979 dollars) and is based on a capital cost of $8,500. Annualized cost includes capital recovery ($2,000 for a 6-year lifetime at 10 percent), maintenance and calibration ($2,700), and other annual expenses ($300 or 4 percent of capital).

8.1.2 New Facilities

The installed capital and annualized costs associated with the control options in terms of new facilities may be less than the projected cost for existing facilities. The controls may be incorporated into the design of a new facility to take advantage of optimum plant layout to minimize piping distances. However, the annualized and capital costs for new facilities are expected to fall within the range estimated for existing facilities with the lower end of the range

TABLE 8-19. CAPITAL COSTS FOR CONTROL OF EQUIPMENT LEAKS

Source	Capital cost item	Capital cost per item (1982 dollars)	Capital cost Model Plants 1 and 2	Capital cost Model Plant 3
Valves	Sealed bellows	4,920	517,000	1,030,000
Pumps	Dual mechanical seals with barrier fluid[a]	8,630	130,000	260,000
Exhausters	Degassing reservoir vents	9,700	58,000	58,000
Pressure-relief devices	Rupture disk[b]	5,120	25,600	46,100
Open-ended lines	Caps	67	1,500	3,000
Sampling connections	Closed purge	640	6,400	13,400
All sources	Monitoring instrument[c]	11,300	11,300	11,300

[a]Includes dual mechanical seals, barrier fluid system, and degassing vents.

[b]Costs for a rupture disk system are the average for use of block valves or three-way valves from Appendix F.

[c]The monitoring instrument would be used by each plant as part of the leak detection and repair program for all equipment items.

TABLE 8-20. ANNUALIZED COSTS FOR CONTROL OF FUGITIVE EMISSIONS FROM EQUIPMENT COMPONENTS (1982 Dollars)

Item	Control technique	Annualized cost per item for the model plants[a] 1 and 2	3	Total annualized costs for Model Plants 1 and 2	Total annualized costs for Model Plant 3
Valves	Quarterly inspections	(9.08)	(13.74)	(950)	(2,900)
	Monthly inspections	(4.20)	(9.39)	(440)	(2,000)
	Sealed-bellows valve	1,200	1,200	126,000	252,000
Pumps	Quarterly inspections	70	20	1,050	600
	Monthly inspections	85	20	1,280	600
	Dual mechanical seals[b]	2,090	2,010	31,400	60,300
Exhausters	Quarterly inspections	76	76	460	460
	Monthly inspections	169	169	1,000	1,000
	Degassing reservoir vents	2,410	2,410	14,500	14,500
Pressure-relief devices	Quarterly inspections	(173)	(219)	(870)	(2,000)
	Monthly inspections	(149)	(205)	(750)	(1,800)
	Rupture disk[c]	948	842	4,700	7,600
Open-ended lines	Caps	10.8	9.4	240	210
Sampling connections	Closed purge	118	109	1,200	2,300

[a]Parentheses denote credit or savings. Inflated at 10 percent per year from 1979 dollars in Appendix F (Factor = 1.33).

[b]Includes dual mechanical seals, barrier fluid system, and degassing vents.

[c]Costs for a rupture disk system are the average of costs for use of block valves or three-way valves from Appendix F.

being more appropriate for new plants. The costs for controlling a new facility would be a function of the plant layout, piping distances, and the number and sizes of the various emission points. Costs for new sources are not presented separately because those elements that may be less expensive cannot be clearly identified and quantified, and because any estimate would be a function of an assumed plant layout.

8.1.3 Modified Sources

The analysis presented in Subsection 8.1.1 for existing sources is applicable to sources that are modified.

8.1.4 Summary of Estimated Control Costs

Cost estimates are provided in the previous sections for the benzene sources at by-product plants, including groups of emission sources and the leak detection and repair program. Not all by-product recovery plants have all of the emission sources for which cost estimates have been provided. All plants are assumed to have tar recovery and handling sources, but a distribution of process types exists for final coolers and light-oil recovery. Table 8-21 shows this distribution with 23 plants (42 percent of total capacity) having a direct-water final cooler and 32 plants (58 percent of total capacity) having another type or no final cooler. Nine plants (7 percent of total capacity) do not recover light oil, and 7 plants (23 percent of capacity) refine the light oil into pure benzene.

The capital and annualized costs for each control option for each model plant are summarized in Tables 8-22 through 8-24. Also presented in the tables for each source are uncontrolled benzene emissions, benzene reductions achieved by the controls, and VOC reductions. Average cost effectiveness is calculated by dividing the annualized cost by the benzene emission reduction achieved. For sources with more than one control option, an incremental cost effectiveness is also given. Incremental cost effectiveness for a particular control option is calculated by subtracting the annualized cost for the next less stringent option from that particular option, and dividing the difference in cost by the difference in emission reduction between the two options.

TABLE 8-21. ESTIMATED DISTRIBUTION OF TYPES OF COKE PLANT EMISSION SOURCES

Source	Number of plants	Percent of total capacity
Final cooler:		
Direct-water	23	42
Tar-bottom	18	28
Wash-oil	6	14
Other	8	8
Light-oil storage	46	93
Benzene storage	7	23

TABLE 8-22. EMISSION REDUCTIONS, COSTS, AND COST EFFECTIVENESS FOR MODEL PLANT 1

Emission source	Control option	Uncontrolled benzene emissions (Mg/yr)	Benzene reduction achieved (Mg/yr)	VOC reduction achieved[a] (Mg/yr)	Capital cost (thousands 1982 dollars)	Annualized cost (thousands 1982 dollars/yr)	Average cost effectiveness ($/Mg)	Incremental cost effectiveness ($/Mg)
1. Final cooler cooling tower								
a. Direct-water final cooler cooling tower	1. Use tar-bottom final cooler	138	112	1,210	101	(22.3)	(200)	(200)
	2. Use wash-oil final cooler	138	138	1,620	2,100	647	4,700	26,000
b. Tar-bottom final cooler cooling tower	1. Use wash-oil final cooler	26	26	410	2,100	669	26,000	26,000
2. Tar decanter tar-intercepting sump, and flushing-liquor circulation tank	Coke oven gas blanketing system	66.1	63.9	134	110	34.8	74	74
3. Tar storage tanks and tar-dewatering tanks	1. Wash-oil scrubber	12.0	10.8	250	118	39.6	3,700	3,700
	2. Coke oven gas blanketing system	12.0	11.8	277	48	10.4	880	(29,000)
4. Light-oil condenser, light-oil decanter, wash-oil decanter, and wash-oil circulation tanks	Coke oven gas blanketing system	35.3	34.6	49.4	67	14.3	410	410
5. Excess-ammonia liquor storage tank	1. Wash-oil scrubber	3.29	2.96	4.2	26	10.5	3,500	3,500
	2. Coke oven gas blanketing system	3.29	3.22	4.6	38	11.4	3,500	3,500
6. Light-oil storage tanks and benzene-mixture storage tanks	1. Wash-oil scrubber	2.12	1.91	2.7	32	12.9	6,800	6,800
	2. Coke oven gas blanketing system	2.12	2.08	3.0	46	14.5	7,000	9,400
7. Benzene storage tanks	1. Wash-oil scrubber	19.1	17.2	17.2	44	11.6	670	670
	2. Nitrogen gas blanketing system	19.1	18.7	18.7	39	16.0	860	2,900
8. Light-oil sump	Cover	5.48	5.37	7.7	5.9	(0.8)	(150)	(150)
9. Pumps[b]	a. Quarterly inspections	10.7	7.6	10.9	0	1.05	140	140
	b. Monthly inspections	10.7	8.9	12.7	0	1.28	140	180
	c. Equip with dual mechanical seals	10.7	10.7	15.3	130	31.4	2,900	16,700
10. Valves[b]	a. Quarterly inspections	7.2	4.5	6.4	0	(0.95)	(210)	(210)
	b. Monthly inspections	7.2	5.2	7.4	0	(0.44)	(85)	730
	c. Equip with sealed-bellows valves	7.2	7.2	10.3	517	126	18,000	63,000
11. Exhausters[b]	a. Quarterly inspections	0.6	0.33	1.4	0	0.42	1,300	1,300
	b. Monthly inspections	0.6	0.38	1.6	0	0.98	2,600	10,000
	c. Equip with degassing reservoir vents	0.6	0.6	2.6	58.0	14.5	24,000	62,000
12. Pressure-relief devices[b]	a. Quarterly inspections	4.95	2.2	3.1	0	(0.87)	(400)	(400)
	b. Monthly inspections	4.95	2.6	3.7	0	(0.75)	(290)	300
	c. Equip with rupture disc system	4.95	4.95	7.1	25.6	4.70	960	2,300
13. Sampling connection systems	Closed-purge sampling	0.94	0.94	1.34	6.4	1.2	1,200	1,200
14. Open-ended lines	Cap or plug	0.32	0.32	0.46	1.5	0.24	740	740

[a]VOC reduction includes benzene.

[b]For the leak detection and repair program, a monitoring instrument is also required with an estimated capital cost of $11,300 and an annualized cost of $6,650/yr.

TABLE 8-23. EMISSION REDUCTIONS, COSTS, AND COST EFFECTIVENESS FOR MODEL PLANT 2

Emission source	Control option	Uncontrolled benzene emissions (Mg/yr)	Benzene reduction achieved (Mg/yr)	VOC reduction achieved[a] (Mg/yr)	Capital cost (thousands 1982 dollars)	Annualized cost (thousands 1982 dollars/yr)	Average cost (effectiveness ($/Mg)	Incremental cost (effectiveness ($/Mg)
1. Final cooler cooling tower								
a. Direct-water final cooler cooling tower	1. Use tar-bottom final cooler	550	448	4,840	216	(144)	(320)	(320)
	2. Use wash-oil final cooler	550	550	6,450	4,800	1,600	2,900	17,000
b. Tar-bottom final cooler cooling tower	1. Use wash-oil final cooler	102	102	1,610	4,800	1,740	17,000	17,000
2. Tar decanter tar-intercepting sump, and flushing-liquor circulation tank	Coke oven gas blanketing system	264	256	538	206	(54.8)	(210)	(210)
3. Tar storage tanks and tar-dewatering tanks	1. Wash-oil scrubber	48.2	43.4	1,020	275	87.5	2,000	2,000
	2. Coke oven gas blanketing system	48.2	47.2	1,110	179	37.9	800	(13,000)
4. Light-oil condenser, light-oil decanter, wash-oil decanter, and wash-oil circulation tanks	Coke oven gas blanketing system	141	138	197	95.4	1.5	11	11
5. Excess-ammonia liquor storage tank	1. Wash-oil scrubber	13.1	11.8	16.9	32	8.0	680	680
	2. Coke oven gas blanketing system	13.1	12.8	18.3	50.7	11.1	870	3,100
6. Light-oil storage tanks and benzene-mixture storage tanks	1. Wash-oil scrubber	16.9	15.2	21.7	58.5	15.4	1,000	1,000
	2. Coke oven gas blanketing system	16.9	16.6	23.7	70.5	19.0	1,100	2,600
7. Benzene storage tanks	1. Wash-oil scrubber	19.1	17.2	17.2	44	11.6	670	670
	2. Nitrogen gas blanketing system	19.1	18.7	18.7	38.5	16.0	860	2,900
8. Light-oil sump	Cover	21.9	21.5	30.7	22.6	(3.5)	(160)	(160)
9. Pumps[b]	a. Quarterly inspections	10.7	7.6	10.9	0	1.05	140	140
	b. Monthly inspections	10.7	8.9	12.7	0	1.28	140	180
	c. Equip with dual mechanical seals	10.7	10.7	15.3	130	31.4	2,900	16,700
10. Valves[b]	a. Quarterly inspections	7.2	4.5	6.4	0	(0.95)	(210)	(210)
	b. Monthly inspections	7.2	5.2	7.4	0	(0.44)	(85)	730
	c. Equip with sealed-bellows valves	7.2	7.2	10.3	517	126	18,000	63,000
11. Exhausters[b]	a. Quarterly inspections	0.6	0.33	1.4	0	0.42	1,300	1,300
	b. Monthly inspections	0.6	0.38	1.6	0	0.98	2,600	10,000
	c. Equip with degassing reservoir vents	0.6	0.6	2.6	58.0	14.5	24,000	62,000
12. Pressure-relief devices[b]	a. Quarterly inspections	4.95	2.2	3.1	0	(0.87)	(400)	(400)
	b. Monthly inspections	4.95	2.6	3.7	0	(0.75)	(290)	300
	c. Equip with rupture disc system	4.95	4.95	7.1	25.6	4.70	960	2,300
13. Sampling connection systems	Closed-purge sampling	0.94	0.94	1.34	6.4	1.2	1,200	1,200
14. Open-ended lines	Cap or plug	0.32	0.32	0.46	1.5	0.24	740	740

[a]VOC reduction includes benzene.

[b]For the leak detection and repair program, a monitoring instrument is also required with an estimated capital cost of $11,300 and an annualized cost of $6,650/yr.

TABLE 8-24. EMISSION REDUCTIONS, COSTS, AND COST EFFECTIVENESS FOR MODEL PLANT 3

Emission source	Control option	Uncontrolled benzene emissions (Mg/yr)	Benzene reduction achieved (Mg/yr)	VOC reduction achieved[a] (Mg/yr)	Capital cost (thousands 1982 dollars)	Annualized cost (thousands 1982 dollars/yr)	Average cost effectiveness ($/Mg)	Incremental cost effectiveness ($/Mg)
1. Final cooler cooling tower								
a. Direct-water final cooler cooling tower	1. Use tar-bottom final cooler	1,240	1,010	10,900	335	(369)	(370)	(370)
	2. Use wash-oil final cooler	1,240	1,240	14,500	7,900	2,720	2,200	13,000
b. Tar-bottom final cooler	1. Use wash-oil final cooler cooling tower	230	230	3,600	7,900	3,190	14,000	14,000
2. Tar decanter tar-intercepting sump, and flushing-liquor circulation tank	Coke oven gas blanketing system	595	575	1,210	330	(164)	(290)	(290)
3. Tar storage tanks and tar-dewatering tanks	1. Wash-oil scrubber	108	98	2,250	448	142	1,500	1,500
	2. Coke oven gas blanketing system	108	106	2,450	225	25	240	(15,000)
4. Light-oil condenser, light-oil decanter, wash-oil decanter, and wash-oil circulation tanks	Coke oven gas blanketing system	317	311	444	131	(24)	(80)	(80)
5. Excess-ammonia liquor storage tank	1. Wash-oil scrubber	29.6	26.6	38.0	48	5.9	220	220
	2. Coke oven gas blanketing system	29.6	29.0	41.4	85	15	520	3,800
6. Light-oil storage tanks and benzene-mixture storage tanks	1. Wash-oil scrubber	38.1	34.3	49.0	77	12.5	360	360
	2. Coke oven gas blanketing system	38.1	37.3	53.3	93	21.8	580	3,100
7. Benzene storage tanks	1. Wash-oil scrubber	19.1	17.2	17.2	44	11.6	670	670
	2. Nitrogen gas blanketing system	19.1	18.7	18.7	38	16.0	850	2,900
8. Light-oil sump	Cover	49.3	48.3	69.0	45	(9.6)	(200)	(200)
9. Pumps[b]	a. Quarterly inspections	25.5	18.0	20.9	0	0.6	33	33
	b. Monthly inspections	25.5	21.3	24.8	0	0.6	28	0
	c. Equip with dual mechanical seals	25.5	25.5	29.7	260	60.3	2,400	14,000
10. Valves[b]	a. Quarterly inspections	17.2	10.9	12.7	0	(2.9)	(270)	(270)
	b. Monthly inspections	17.2	12.4	14.4	0	(2.0)	(160)	600
	c. Equip with sealed-bellows valves	17.2	17.2	20.0	1,030	252	15,000	53,000
11. Exhausters[b]	a. Quarterly inspections	0.60	0.33	1.4	0	0.42	1,300	1,300
	b. Monthly inspections	0.60	0.38	1.6	0	0.98	2,600	10,000
	c. Equip with degassing reservoir vents	0.60	0.60	2.6	58	14.5	24,000	62,000
12. Pressure-relief devices[b]	a. Quarterly inspections	11.0	4.9	5.7	0	(2.0)	(410)	(410)
	b. Monthly inspections	11.0	5.8	6.7	0	(1.8)	(310)	220
	c. Equip with rupture disc system	11.0	11.0	12.8	46	7.6	690	1,800
13. Sampling connection systems	Closed-purge sampling	2.3	2.3	2.7	13	2.3	1,000	1,000
14. Open-ended lines	Cap or plug	0.77	0.77	0.90	3	0.42	550	550

[a]VOC reduction includes benzene.

[b]For the leak detection and repair program, a monitoring instrument is also required with an estimated capital cost of $11,300 and an annualized cost of $6,650/yr.

Estimates of nationwide costs, emission reductions, and cost effectiveness are presented in Table 8-25. Nationwide costs (excluding the leak detection and repair program, LDAR) were estimated from the model battery analysis with the use of linear cost functions and data on plant-specific capacities and processes. For each control option, a midrange capital and annualized cost was determined for each model plant. The midrange costs for the model plants were then used to express the control cost as a linear function of coke capacity. The cost function for a source was then applied to each real plant that has the given emission source by using the real plant's capacity in the cost function. Nationwide costs were determined by summing the costs for all plants. To estimate the nationwide costs of the LDAR program, the costs for each type of model battery shown in Tables 8-19 and 8-20 were multiplied by the number of each type of battery currently existing. For exhausters, a total of 55 plants was used. A total of 46 plants produce light oil, and 7 of these refine it to benzene. Therefore, a total of 39 plants fall into the Models 1 and 2 category, and 7 plants are represented by Model Plant 3.

Regulatory alternatives were developed from the control options in Table 8-25 for the purpose of determining the economic impact (Chapter 9) of differing control strategies. Regulatory Alternative I represents baseline control with no national emission standard.

Based upon the average and incremental cost effectiveness in Table 8-25, several options were chosen as Regulatory Alternative II for the economic impact analysis. The controls for Regulatory Alternative II include the tar-bottom final cooler; gas blanketing for Sources No. 2 through No. 7 (tar decanter, tar-intercepting sump, flushing-liquor circulation tank, tar storage and dewatering, light-oil condenser, light-oil decanter, wash-oil decanter, wash-oil circulation tank, the excess-ammonia liquor tank, light-oil and benzene mixture storage tanks, and benzene storage tanks); a sealed cover for the light-oil sump; monthly monitoring for pumps and valves in benzene service (at least 10-percent benzene by weight); quarterly monitoring for exhausters in benzene service (at least 1-percent benzene by weight); and equipment

TABLE 8-25. NATIONWIDE EMISSION REDUCTIONS, COSTS, AND COST EFFECTIVENESS

Emission source	Control option	Uncontrolled benzene emissions (Mg/yr)	Benzene reduction achieved (Mg/yr)	VOC reduction achieved[a] (Mg/yr)	Capital cost (thousands 1982 dollars)	Annualized cost (thousands 1982 dollars/yr)	Average cost effectiveness ($/Mg)	Incremental cost effectiveness ($/Mg)
1. Final cooler cooling tower								
a. Direct-water final cooler cooling tower	1. Use tar-bottom final cooler	8,850	7,200	77,600	3,770	(2,180)	(300)	(300)
	2. Use wash-oil final cooler	8,850	8,850	103,000	83,100	26,200	3,000	17,000
b. Tar-bottom final cooler	1. Use wash-oil final cooler cooling tower	1,090	1,090	17,100	59,600	21,100	19,000	19,000
2. Tar decanter tar-intercepting sump, and flushing-liquor circulation tank	Coke oven gas blanketing system	10,200	9,883	21,000	9,040	(2,730)	(280)	(280)
3. Tar storage tanks and tar-dewatering tanks	1. Wash-oil scrubber	1,770	1,590	37,200	11,230	3,650	2,300	2,300
	2. Coke oven gas blanketing system	1,770	1,740	40,700	6,140	1,170	670	(18,000)
4. Light-oil condenser, light-oil decanter, wash-oil decanter, and wash-oil circulation tanks	Coke oven gas blanketing system	4,440	4,350	6,220	3,740	504	120	120
5. Excess-ammonia liquor storage tank	1. Wash-oil scrubber	510	459	656	1,660	502	1,100	1,100
	2. Coke oven gas blanketing system	510	500	715	2,560	620	1,200	2,900
6. Light-oil storage tanks and benzene-mixture storage tanks	1. Wash-oil scrubber	380	342	489	2,240	630	1,800	1,800
	2. Coke oven gas blanketing system	380	372	532	2,810	808	2,200	5,900
7. Benzene storage tanks	1. Wash-oil scrubber	76	68	68	310	80	1,200	1,200
	2. Nitrogen gas blanketing system	76	74	74	269	130	1,800	8,300
8. Light-oil sump	Cover	780	764	1,090	781	(164)	(220)	(220)
9. Pumps[b]	a. Quarterly inspections	596	422	603	0	45.2	110	110
	b. Monthly inspections	596	496	709	0	54.1	110	120
	c. Equip with dual mechanical seals	596	596	852	6,890	1,650	2,800	16,000
10. Valves[b]	a. Quarterly inspections	401	252	360	0	(57.4)	(230)	(230)
	b. Monthly inspections	401	290	415	0	(31.2)	(110)	690
	c. Equip with sealed-bellows valves	401	401	573	27,400	6,700	17,000	61,000
11. Exhausters[b]	a. Quarterly inspections	33	18	77	0	23.3	1,300	1,300
	b. Monthly inspections	33	21	90	0	54.0	2,600	10,000
	c. Equip with degassing reservoir vents	33	33	140	3,200	798	24,000	62,000
12. Pressure-relief devices[b]	a. Quarterly inspections	270	120	172	0	(47.9)	(400)	(400)
	b. Monthly inspections	270	142	203	0	(41.9)	(300)	270
	c. Equip with rupture disc system	270	270	386	1,320	237	880	2,200
13. Sampling connection systems	Closed-purge sampling	52.8	52.8	75.5	343	62.9	1,200	1,200
14. Open-ended lines	Cap or plug	17.9	17.9	25.6	79.4	12.3	690	690

[a]VOC reduction includes benzene.

[b]For the leak detection and repair program, a monitoring instrument is also required with an estimated nationwide capital cost of $622,000 and a total annualized cost of $366,000/yr.

controls for pressure-relief devices, sampling connections, and open-ended lines in benzene service (at least 10-percent benzene by weight).

Regulatory Alternative III was chosen as a more stringent combination of controls that would yield a greater emission reduction than that achieved by Regulatory Alternative II. The options chosen for analysis as Regulatory Alternative III include a wash-oil final cooler; equipment specifications for pumps, valves, and exhausters in benzene service (at least 1-percent benzene for exhausters and at least 10-percent benzene for pumps and valves, by weight); and for other sources the same controls as listed for Regulatory Alternative II.

8.1.5 Comparison of Actual and Estimated Capital Costs

Because only a few gas blanketing systems have been installed, any comparison of actual and estimated costs is limited. Armco, Inc., personnel estimated the cost of their gas blanketing system as $130,000 (1975 dollars) but warned that the estimate was approximate. The system was part of a larger multimillion-dollar construction project, which made it difficult to extract only gas blanketing costs.[14] Inflating this estimate to 1982 dollars at a rate of 10 percent per year yields an estimate of $250,000 (1982 dollars).

The Armco system controlled tar decanters; flushing-liquor circulation tanks; ammonia-liquor storage tanks; tar-collecting, tar-dewatering, and tar storage tanks; and the light-oil plant, sump, and storage tanks. A capacity of 837 Mg coke/day puts the plant into the Model Plant 1 category. Capital cost estimates for Model Plant 1 for sources controlled at Armco total $121,000 to $412,000 (1982 dollars) with a midrange estimate of $267,000. The Model Plant 1 estimate appears reasonable compared to the actual plant estimate.

Bethlehem Steel Corporation at Sparrows Point estimated the cost of gas blanketing the light-oil plant in by-product Plant B as $44,000 (1982 dollars). Plant personnel indicated that this blanketing system was also part of a larger project, and all costs could not be identified clearly.[15] The two by-product plants at Sparrows Point are designed for a total coke capacity of 7,100 Mg/day, which roughly equals two Model-2-type plants. Costs for gas blanketing the light-oil plant for Model Plant 2 were estimated as $72,000 to $120,000 with a midrange of $96,000 (1982 dollars). Comparison with Bethlehem's estimate of

$44,000 indicates this estimate may be high. However, the estimate encompasses a wide range of piping distances for the model plants, and another specific plant with a different layout may incur greater expenses than the relatively compact Sparrows Point plant would.

Two other companies submitted cost estimates for their own design of a gas blanketing system. These designs were more sophisticated than were gas blanketing systems that have been used in the industry because of elaborate pressure controllers, alarms, blanketing techniques, and redundant controls. The two companies suggested they might choose to use nitrogen or natural gas instead of coke oven gas to blanket the emission sources. These designs have not been applied by the industry, and because the blanketing technology differs from that recommended in Chapter 4 and analyzed in this chapter, direct-cost comparisons would not be valid. However, in total capital costs, estimates for the theoretical designs of the undemonstrated systems were significantly higher than was the simpler coke oven gas blanketing system, which has been applied in at least three by-product recovery plants.

8.2 OTHER COST CONSIDERATIONS

By-product coke plants have incurred a number of regulations that relate to atmospheric and environmental emissions of solid waste and water. The Occupational Safety and Health Administration (OSHA) has developed occupational health rules that restrict personal exposure of workers to 10 ppm benzene (8-hour time-weighted average). It is presently unclear which by-product emission sources are covered by OSHA benzene standards and which mandated equipment and equipment performance could be required. The environmental control alternatives could effectively lower the emissions of the affected sources and help attain the personal exposure standard, but the converse is not necessarily true. OSHA controls could reduce worker exposure and have little environmental benefit; e.g., venting of emissions into the atmosphere away from the workers. For these reasons, the cost of OSHA compliance is assumed to have no influence on potentially mandated environmental controls.

The coke oven by-product plants also have occupational health requirements for exposure to benzene-soluble particulate materials from the coke oven battery. Atmospheric emission controls are required for charging, doors, pushing, quenching, and oven leaks. The costs for OSHA regulations and other air and water regulations have been included in the baseline costs, which will be analyzed in Chapter 9, Economic Impact.

8.3 REFERENCES

1. Neveril, R. B. Capital and Operating Costs of Selected Air Pollution Control Systems. U.S. Environmental Protection Agency. Research Triangle Park, NC. Publication No. EPA-450/5-80-002. December 1978. p. 3-2-3-8.

2. Mossman, M. J. Mechanical and Electrical Cost Data: 1982, 5th ed. Robert Snow Means Company, Inc. 1981.

3. National Construction Estimator: 1982, 30th ed. Craftsman Book Company, 1982. p. 194-197.

4. PEDCo Environmental, Inc. Technical Approach for a Coke Production Cost Model. (Prepared for U.S. Environmental Protection Agency.) EPA Contract No. 68-02-3071, Task 1. December, 1979. p. 12.

5. Perry, R. H. (ed). Chemical Engineer's Handbook. (Fifth Edition). McGraw-Hill, Inc., 1973. p. 9-16.

6. Current Prices of Chemicals and Related Materials. Chemical Marketing Reporter. April 9, 1982. p. 40-41.

7. Reference 1, p. A-9.

8. Reference 1, p. 3-15-3-18.

9. Hall, R. S., J. Matley, and K. J. McNaughton. Current Costs of Process Equipment. Chemical Engineering. April 5, 1982. 89(11): 80-116.

10. Happell, J., and D. G. Jordan. Chemical Process Economics. 2nd ed. Marcel Dekker. NY. 1975. pp. 213-255.

11. Wilson, P. J., Jr., and J. H. Wells. Coal, Coke, and Coal Chemicals. New York, McGraw-Hill, 1950. p. 44.

12. Guthrie, K. M. Process Plant Estimating, Evaluation, and Control. Solana Beach, Craftsman Book Company, 1974.

13. VanOsdell, D. W., et. al. Environmental Assessment of Coke By-Product Recovery Plants. U.S. Environmental Protection Agency. Research Triangle Park, NC. Publication No. 600/2-79-016. January 1979. 387 p.

14. Branscome, M. R. Trip Report to Armco, Incorporated, Houston, Texas. March 4, 1982. Research Triangle Institute.

15. Letter from McMullen, R. M., Bethlehem Steel Corporation, to Cuffe, S. T., U.S. Environmental Protection Agency. March 12, 1982. Section 114 response.

9. ECONOMIC IMPACT

This chapter addresses the economic impacts of the regulatory alternatives for coke oven by-product plants. These alternatives are described in Chapter 6 and apply to new and existing coke oven by-product plants. Regulatory Alternatives II and III would have neglible impacts on the price and production level of furnace and foundry coke but the regulatory alternatives are not expected to result in any closings of furnace or foundry coke batteries, plants, or companies.

Section 9.1 presents a profile of the coke industry. Section 9.2 contains an analysis of the impacts of the regulatory alternatives, which also addresses the potential impacts of compliance with a comprehensive list of environmental and other controls. These impacts are measured against the existing state of control for all sources. Section 9.3 presents potential socioeconomic and inflationary impacts.

9.1 INDUSTRY PROFILE

9.1.1 Introduction

Coke production is a part of Standard Industrial Code (SIC) 3312--Blast Furnaces and Steel Mills. Coke is principally used in the production of steel and ferrous foundry products, which are also part of the output of SIC 3312. Thus coke is both produced and principally consumed within SIC 3312. Furthermore, many producers of furnace coke are fully integrated iron- and steel-producing companies. Any regulation on coke production is expected to have some impact on the entire blast furnaces and steel mills industry with special emphasis on coke producers.

This profile has two purposes: (1) to provide the reader with a broad overview of the industry and (2) to lend support to an economic analysis by assessing the appropriateness of various economic models to analyze the industry. Further, the profile provides some of the data necessary to the analysis itself.

The industry profile comprises six major sections. The remainder of this introduction, which constitutes the first section, provides a brief, descriptive, and largely qualitative look at the industry. The remaining five sections of the profile conform with a particular model of industrial organizational analysis. This model maintains that an industry can be characterized by its basic conditions, market structure, market conduct, and market performance.

The basic conditions in the industry, discussed in the second and third sections of this profile, are believed to be major determinants of the prevailing market structure. Most important of these basic conditions are supply conditions, which are largely technological in nature, and demand conditions, which are determined by the attributes of the products themselves.

The market structure and market conduct of the blast furnaces and steel mills industry are examined in the fourth section. Issues addressed include geographic concentration, firm concentration, integration, and barriers to entry. Market structure is believed to have a major influence on the conduct of market participants. Market conduct is the price and nonprice behavior of sellers. Of particular interest is the degree to which the industry pricing behavior can be approximated by the competitive pricing model, the monopoly pricing model, or some model of imperfect competition.

The fifth section of the industry profile addresses market performance. The historical record of the industry's financial performance is examined, with some emphasis on its comparison with other industries. The sixth section of the industry profile presents projections of key variables such as coke production and steel production. The seventh section discusses market behavior.

9.1.1.1 Definition of the Coke Industry. Coke production is a part of SIC 3312--Blast Furnaces and Steel Mills, which includes establishments that produce coke and those that primarily manufacture hot metal, pig iron, silvery pig iron, and ferroalloys from iron ore and iron and steel scrap. Establishments that produce steel from pig iron, iron scrap, and steel scrap and establishments that produce basic shapes such as plates, sheets, and bars by hot rolling the iron and steel are also included in SIC 3312.[1] The total value of shipments from SIC 3312 in 1980 was $50,303,900,000[2] and

an approximate value for total coke production in 1980 was $4,648,413,000,[3] or less than 10 percent of the total value of shipments.

Coke is produced in two types of plants: merchant and captive. Merchant plants produce coke to be sold on the open market, and many are owned by chemical or other companies. The majority of coke plants in the United States are captive plants which are vertically integrated with iron and steel companies and use coke in the production of pig iron. At the end of 1979, 17 plants were merchant and 43 were captive, and merchant plants accounted for only 9 percent of total coke production.[4]

9.1.1.2 Brief History of the Coke Industry in the Overall Economy. Traditionally, the value of coke produced in the United States has constituted less than 1 percent of the gross national product (GNP).[5] [6] During most of the 1950's, coke production was about 0.30 percent of GNP, and during the 1960's and until the mid-1970's, coke production was only about 0.20 percent or less of GNP. However, in 1974, coke production as a percent of GNP rose to above 0.30 percent. This trend continued for the next 2 years. By 1979, coke production was about 0.2 percent of GNP.[7] [8]

Previously, U.S. coke exports have been greater than imports, but that trend may be changing. The values of all U.S. imports and exports and U.S. coke imports and exports are shown in Table 9-1. From 1950 to 1972, coke exports were much greater than coke imports, but after 1973, this trend was reversed. The same pattern applies to the percentages of coke imports and exports within total U.S. imports and exports. From 1950 to 1972, coke exports were a larger percentage of total U.S. exports than coke imports were of total U.S. imports. Again, from 1973 to 1979, this trend reversed, and coke imports were a larger proportion of total U.S. imports than coke exports were of total U.S. exports.

U.S. coke production has always been a substantial portion of world coke production. This share has decreased during the past 30 years, as indicated in Table 9-2. From 1950 to 1977, world coke production generally increased while U.S. coke production decreased. This trend explains the decline in the U.S. percentage of world coke production.

9.1.1.3 Size of the Iron and Steel Industry. The value of shipments of SIC 3312 has increased since 1960. There have been a few fluctuations in this growth; for example, as shown in Table 9-3, the 1965 value of

TABLE 9-1. COKE INDUSTRY FOREIGN TRADE[4 5 6]

Year	Total U.S. imports (billion dollars)[a]	Coke imports for consumption (million dollars)[a]	Coke imports as a share of total imports (percent)	U.S. exports (billion dollars)[a]	Coke exports (million dollars)[a]	Coke exports as a share of total exports (percent)
1950	8.9	5.3	0.06	10.3	6.2	0.06
1951	11.0	1.9	0.02	15.0	17.7	0.12
1952	10.7	4.5	0.04	15.2	13.7	0.09
1953	10.9	1.7	0.02	15.8	9.3	0.06
1954	10.2	1.3	0.01	15.1	6.2	0.04
1955	11.4	1.4	0.01	15.5	8.2	0.05
1956	12.6	1.5	0.01	19.1	11.5	0.06
1957	13.0	1.5	0.01	20.9	14.4	0.07
1958	12.8	1.6	0.01	17.9	7.1	0.04
1959	15.2	1.4	0.01	17.6	8.7	0.05
1960	14.7	1.5	0.01	20.6	6.9	0.03
1961	14.7	1.5	0.01	21.0	8.2	0.04
1962	16.4	1.9	0.01	21.7	7.4	0.03
1963	17.1	2.0	0.01	23.3	8.3	0.04
1964	18.7	1.5	0.01	26.5	10.1	0.04
1965	21.4	1.4	0.01	27.5	16.3	0.06
1966	25.5	1.8	0.01	30.3	23.4	0.08
1967	26.8	1.7	0.01	31.5	16.5	0.05
1968	33.2	1.9	0.01	34.6	18.6	0.05
1969	36.0	3.4	0.01	38.0	38.5	0.10
1970	39.9	3.5	0.01	42.5	78.9	0.19
1971	45.6	5.0	0.01	43.5	44.8	0.10
1972	55.8	4.6	0.01	49.4	30.7	0.06
1973	70.5	39.3	0.06	71.4	33.1	0.05
1974	103.7	193.2	0.19	98.3	43.6	0.04
1975	98.0	156.5	0.16	107.1	74.7	0.07
1976[b]	124.0	111.1	0.09	114.7	66.7	0.06

[a]Current dollars.

[b]In 1977 and 1978, coke imports and exports were reported in unit (ton) terms and not value (dollar) terms.

TABLE 9-2. COKE PRODUCTION IN THE WORLD[2 4 7]

Year	World production[a] (million megagrams)	U.S. production (million megagrams)	U.S. production as a share of world production (percent)
1950	182.3	65.9	36.1
1951	204.1	71.9	35.2
1952	208.9	62.0	29.7
1953	225.6	71.5	31.7
1954	211.5	54.4	25.7
1955	242.3	68.3	28.2
1956	256.8	67.6	26.3
1957	266.1	69.0	25.9
1958	255.0	48.6	19.1
1959	260.4	50.7	19.5
1960	279.7	51.9	18.6
1961	272.0	46.9	17.2
1962	272.9	47.1	17.3
1963	281.7	49.3	17.5
1964	298.5	56.4	18.9
1965	310.3	60.7	19.6
1966	310.4	61.2	19.7
1967	303.9	58.6	19.3
1968	315.8	57.8	18.3
1969	335.8	58.8	17.5
1970	350.5	60.3	17.2
1971	342.7	52.1	15.2
1972	340.5	54.9	16.1
1973	365.8	58.4	16.0
1974	367.4	55.9	15.2
1975	363.3	51.9	14.3
1976	367.2	52.9	14.4
1977	373.5	48.5	13.0
1978	364.7	44.5	12.2
1979	341.0	48.0	14.1

[a]Oven and beehive coke combined.

TABLE 9-3. VALUE OF SHIPMENTS, SIC 3312[8] [9]

Year	Current dollars (millions)	1972 Dollars (millions)
1960	15,783.8	22,981.7
1961	14,873.3	21,468.4
1962	15,571.6	22,071.7
1963	16,418.0	22,933.4
1964	18,840.1	25,914.9
1965	20,841.7	28,043.2
1966	21,193.9	27,610.6
1967	19,620.6	24,829.9
1968	21,161.1	25,628.1
1969	22,299.0	25,713.8
1970	21,501.6	23,535.0
1971	21,971.3	22,882.0
1972	23,946.7	23,946.7
1973	30,365.5	28,700.9
1974	41,671.7	35,917.7
1975	35,659.8	28,038.8
1976	39,684.1	29,643.8
1977	41,897.8	29,645.4

shipments of SIC 3312 was the highest value between 1960 and 1972. Since 1972, the value of shipments has remained around $30 million, with the highest value being $35 million (1972 dollars) in 1974.

For SIC 3312, Table 9-4 shows the value added by manufacture, the total number of employees, and the value added per employee. Current and constant (1972) dollar figures are included. Both the total value added by manufacture and the value added per employee peaked in 1974, the same year in which the value of shipments for this industry was the highest. The increasing value added per employee might indicate that this industry is changing to a more capital-intensive production process.

9.1.2 Production

9.1.2.1 Product Description. Two types of coke are produced: furnace coke and foundry coke. Furnace coke is used as a fuel in blast furnaces; foundry coke is used as a fuel in the cupolas of foundries. Coke is also used for other miscellaneous processes such as residential and commercial heating. In 1978, only 2 percent of all coke used in the United States was used for these miscellaneous purposes, 93 percent was used in blast furnaces, and the remaining 5 percent was used in foundries.[14] Time-series data for the percent of total U.S. consumption attributable to each use are shown in Figure 9-1.

9.1.2.2 Production Technology. Coke is typically produced from coal in a regenerative type of oven called the by-product oven. The type of coal used in coke production and the length of time the coal is heated (coking time) determine the end use of the coke. Both furnace and foundry coke are usually obtained from the carbonization of a mixture of high- and low-volatile coals. Generally, furnace coke is obtained from a coal mix of 10 to 30 percent low-volatile coal and is coked an average of 18 hours, and foundry coke is obtained from a mix of 50 percent or more low-volatile coal and is coked an average of 30 hours.

The first by-product oven in the United States was built in 1892 to produce coke and to obtain ammonia to be used in the production of soda ash. In such ovens, the by-products of carbonization (such as ammonia, tar, and gas) are collected instead of being emitted into the atmosphere as they were in the older, beehive ovens.

TABLE 9-4. VALUE ADDED, SIC 3312[8] [9]

Year	Value added by manufacture		Employees (thousands)	Value added per employee--1972 dollars (thousands)
	Current dollars (millions)	1972 Dollars (millions)		
1960	6,844.4	9,965.6	550.0	18.1
1961	6,546.3	9,449.0	503.4	18.8
1962	6,620.9	9,384.7	502.2	18.7
1963	7,506.4	10,485.3	500.5	20.9
1964	8,479.6	11,663.8	532.9	21.9
1965	9,379.8	12,620.8	565.4	22.3
1966	9,643.6	12,563.3	559.4	22.5
1967	8,910.1	11,275.8	533.1	21.2
1968	9,275.8	11,233.9	533.1	21.1
1969	9,853.2	11,362.1	537.7	21.1
1970	9,350.5	10.234.8	526.5	19.4
1971	9,563.1	9,959.5	482.2	20.7
1972	10,304.7	10,304.7	469.1	22.0
1973	12,769.4	12,069.4	502.1	24.0
1974	17,425.8	15,019.7	518.0	29.0
1975	13,356.2	10,501.8	451.3	23.3
1976	14,755.5	11,022.3	451.9	24.4
1977	15,021.4	10,628.6	441.4	24.1

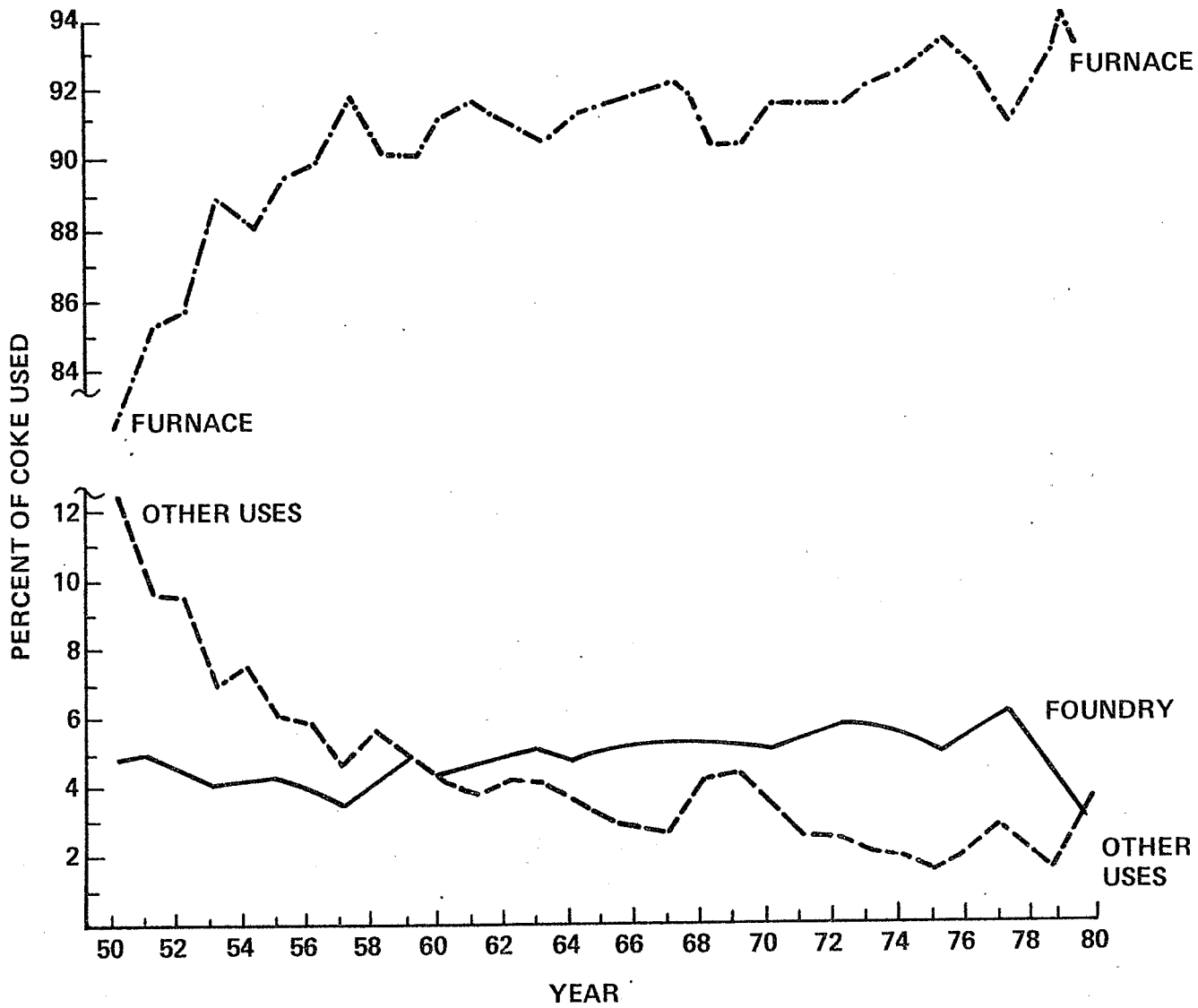

Figure 9-1. Uses of oven coke as percents of total coke consumption.[2,6,14]

The total amount of coke that can be produced each year is restricted by the number of ovens in operation for that year, and not all ovens are in operation all of the time. Oven operators try to avoid closing down a group of ovens for any reason because of the time and energy lost while the ovens cool and reheat and because of the oven deterioration that results from cooling and reheating. However, it is estimated that at any time, approximately 5 to 10 percent of existing coke oven capacity is out of service for rebuilding or repair.[20] In a report written for the Department of Commerce, Father William T. Hogan estimated the potential annual maximum capacity of U.S. oven coke plants as of July 31, 1979.[21] His estimates are shown in Table 9-5. Hogan assumes that almost 10 percent of his estimate of total capacity will be out of service at any given time; therefore, he subtracts the out-of-service capacity from total capacity to obtain maximum annual capacity.

Within the limits of the number of ovens available for coking, both furnace and foundry coke production levels vary. Some ovens that produce furnace coke can be switched to produce foundry coke by changing the coal mix and increasing the coking time. Furthermore, some ovens that produce foundry coke could be changed to produce furnace coke by changing the coal mix and decreasing the coking time. Also, some variation in the combination of flue temperature and coking time is possible for either type of coke. A shorter coking time results in greater potential annual production.

9.1.2.3 Factors of Production. Table 9-6 provides a typical labor and materials cost breakdown for furnace coke production. Coal is the major material input in the production of coke. In 1979, greater than 61 percent of the coal received by coke plants was from mines that were company owned or affiliated.[23] In this same year, 14 States shipped some coal to coke plants outside their borders.[24] Of the coal received by domestic coke plants, over 81 percent came from West Virginia, Kentucky, Pennsylvania, and Virginia.[25] Any potential adverse impact on the coke industry probably will have some impact in these States. A total of 69.9 million megagrams of bituminous coal was carbonized in 1979.[26]

Table 9-7 shows employment in the by-product coke industry from 1950 to 1970 and the percentage of total SIC 3312 employees in the by-product

TABLE 9-5. POTENTIAL MAXIMUM ANNUAL CAPACITY OF OVEN COKE PLANTS IN THE UNITED STATES ON JULY 31, 1979[12]

	Number of batteries	Number of ovens	Capacity (Mg)
In existence			
Furnace plants	169	10,076	53,095,381
Merchant plants	30	1,337	4,400,691
Total	199	11,413	57,496,072
Out of service[a]			
Furnace plants	(18)	(1,026)	(5,255,001)
Merchant plants	(2)	(117)	(460,599)
Total	(20)	(1,143)	(5,715,600)
In operation			
Furnace plants	151	9,050	47,840,380
Merchant plants	28	1,220	3,940,092
Total	179	10,270	51,780,472

[a]Batteries and ovens down for rebuilding and repair.

TABLE 9-6. TYPICAL COST BREAKDOWNS: FURNACE COKE PRODUCTION AND HOT METAL (BLAST FURNACE) PRODUCTION[13]

Furnace coke production	
Labor and materials	Percent of cost
Coking coal	77.1
Coal transportation	9.4
Labor (operation and maintenance)	6.6
Maintenance materials	6.9
Total labor and material costs	100.0

Hot metal production	Percent of cost
Charge metallics	42.5
Iron ore	(6.3)
Agglomerates	(33.3)
Scrap	(2.9)
Fuel inputs	44.8
Coke	(41.8)
Fuel oil	(3.0)
Limestone fluxes	0.7
Direct labor	7.6
Maintenance	1.5
General expenses	2.9
Total labor and material costs	100.0

TABLE 9-7. EMPLOYMENT IN THE BY-PRODUCT COKE INDUSTRY[15]

Year	Number of employees	Percentage of all employees in SIC 3312
1950	20,942	NA
1951	22,058	NA
1952	21,919	NA
1953	21,011	NA
1954	17,944	NA
1955	19,595	NA
1956	19,318	NA
1957	19,203	NA
1958	15,654	3.06
1959	15,865	3.13
1960	15,779	2.87
1961	13,106	2.60
1962	12,723	2.53
1963	12,696	2.54
1964	13,021	2.44
1965	14,003	2.48
1966	13,745	2.46
1967	13,662	2.56
1968	14,136	2.65
1969	13,617	2.53
1970	13,997	2.66
1971[a]	11,955	2.48
1972	11,127	2.37
1973	11,121	2.21
1974	11,207	2.16
1975	12,109	2.68
1976	11,047	2.44
1977	10,196	2.31

NA = not applicable.

[a]Figures for 1971-1977 are estimates. See text for more detail.

coke industry. This table shows decreasing employment in the by-product coke industry. A similar decline in employment has occurred in SIC 3312. Unfortunately, employment data for the by-product coke industry are not available after 1970; however, these figures can be estimated by regressing employment in the by-product coke industry on total iron and steel industry employment and on the ratio of coke used in steel production.* These estimates are also shown in Table 9-7.

9.1.3 Demand and Supply Conditions

Domestic consumption of coke from 1950 to 1980 is graphed in Figure 9-2. In the early 1950's, the amount of coke consumption was fairly large; an average of 65 million megagrams was consumed annually between 1950 and 1958. The late 1950's and early 1960's showed a sharp decrease in coke consumption, with an average of only 48 million megagrams consumed annually. Domestic consumption of coke increased during the mid-1960's to mid-1970's to an annual figure of 57 million megagrams but it did not reach the 1950 to 1957 level. The late 1970's show another slump in coke consumption.

The variation in coke consumption shown in Figure 9-2 has both cyclic and trend components. The demand for coke is derived from demands for iron and steel products, and these demands are sensitive to the performance of the overall economy. Cycles in coke demand are linked to cycles in aggregate demand or cycles in demand for particular products such as automobiles.

The trend component in coke consumption results from changes in blast furnace production techniques. Coke is used as a fuel in blast furnaces, but it is not the only fuel that can be used. Coke oven gas, fuel oil, tar and pitch, natural gas, and blast furnace gas have all been used as supplements to coke in heating the blast furnaces. The increased use of these supplemental fuels over the past 20 years has caused the amount of coke used per ton of pig iron produced (the coke rate) to decrease. Other causes of the decline in coke rate are increased use of oxygen in the blast

---

*Regressions performed by Research Triangle Institute, 1980.

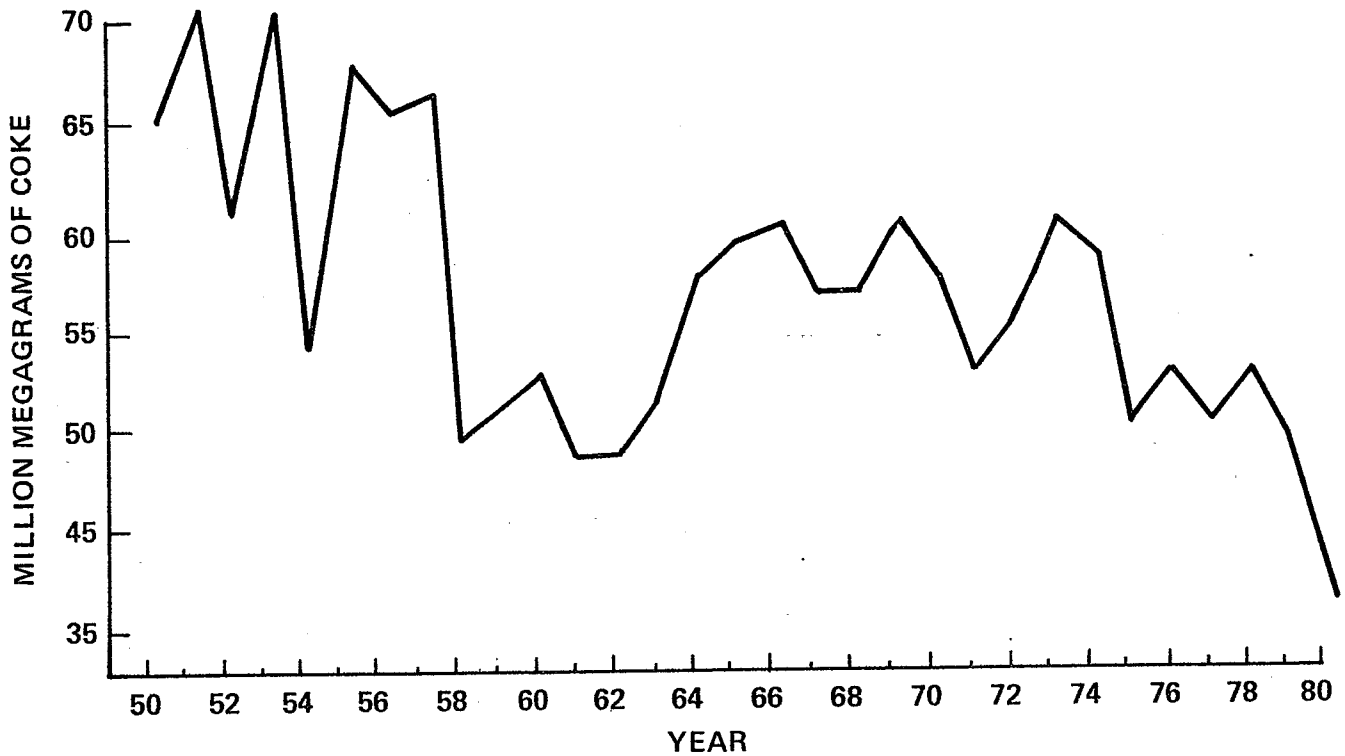

Figure 9-2. U.S. apparent consumption of coke.[6,19]

furnaces and use of higher metallic content ores. Table 9-8 shows U.S. pig iron production, coke consumed in the production of pig iron, and the coke rate for 1950 to 1980. (Data limitations make it difficult to calculate the foundry coke rate in cupola production.)

Recently, there has been some concern about the ability of the United States' coke-making capacity to support domestic steel production--the major source of coke demand. The study conducted by Hogan and Koelble of the Industrial Economics Research Institute at Fordham University indicates that in 1978, U.S. production of coke was 14.1 percent below domestic consumption.[31] Imports increased dramatically in that same year. Hogan and Koelble attribute this decline in coke production to the abandonment of coke ovens for environmental reasons and predict a severe coke shortage by 1982.[32] This prediction is disputed in a Merrill Lynch Institutional Report by Charles Bradford. The Bradford report attributes the lack of adequate U.S. coke production in 1978 to two factors: (1) a coal miner's strike, which caused the drawing down of stocks of coke when they should have been increasing, and (2) the premature closing because of EPA regulation of some coke ovens that normally would have been replaced before they were closed.[33] The Bradford report states that a survey of U.S. steel producers revealed that all of the major steel producers are or soon will be self-sufficient with regard to coke-making capacity.[34] The Bradford explanation of 1978 coke imports seems more reasonable because 1979 coke imports decreased about 1.6 million megagrams compared to the 1978 level. Furthermore, it seems unlikely that a severe shortage of coke capacity will occur in 1982 because currently there are no signs of a major shortfall in capacity.

9.1.4 Market Structure

Market power, the degree to which an individual producer or groups of producers can control market price, is of particular economic importance. Market structure is an important determinant of market power. Pricing behavior is relevant to the choice of the methodology used in assessing the potential impacts of new regulations. It is important to determine if the competitive pricing model (price equal to marginal cost) adequately describes pricing behavior for coke producers.

TABLE 9-8. COKE RATE[2 4 7]

Year	Pig iron production (thousand megagrams)	Coke used in blast furnaces (thousand megagrams)	Coke rate
1950	58,514	51,403	0.86
1951	63,756	55,362	0.87
1952	55,618	49,386	0.89
1953	67,906	58,880	0.87
1954	52,570	46,861	0.89
1955	69,717	60,675	0.87
1956	68,067	58,279	0.86
1957	71,128	60,861	0.86
1958	51,851	42,898	0.83
1959	54,622	44,107	0.81
1960	60,329	46,462	0.77
1961	58,834	42,855	0.73
1962	59,546	42,298	0.71
1963	65,173	44,596	0.68
1964	77,527	51,076	0.66
1965	80,021	53,576	0.67
1966	82,815	54,653	0.66
1967	78,744	51,300	0.65
1968	80,529	51,399	0.64
1969	86,186	55,065	0.64
1970	82,820	54,754	0.66
1971	73,829	48,269	0.65
1972	80,628	50,214	0.62
1973	91,915	54,791	0.60
1974	86,616	51,154	0.59
1975	72,322	44,375	0.61
1976	79,788	47,678	0.60
1977	73,931	44,292	0.60
1978	79,552	47,889	0.60

Any analysis of market structure must consider the characteristics of the industry. This analysis addresses the number of firms producing coke; the concentration of production in specific firms; the degree of integration in coke production; the availability of substitutes for coke; and the availability of substitutes for the commodities for which coke is an input to production. Also, some information on past pricing in the coke industry is presented. These topics will be considered together with financial performance (Section 9.1.5) and growth (Section 9.1.6) in assessing market behavior (Section 9.1.7).

9.1.4.1 Concentration Characteristics and Number of Firms. This section describes various concentration measures that can be computed for the furnace and foundry coke industries. Normally, concentration ratios are used as an indication of the existence of market power. While concentration ratios are a useful tool for describing industry structure, concentration should not be used as an exclusive measure of market power. Many other factors (e.g., availability of substitutes, product homogeneity, ease of market entry) determine a firm's ability to control market price.

As of December 1982, 30 companies operated by-product coke ovens.[35] Fourteen companies are integrated iron and steel producers; 16 companies are merchant firms. These companies owned and operated a total of 55 coke plants; 37 of these plants were captive and 18 of them were merchant. A list of these companies, their plant locations, the major uses of coke at each plant, and plant coke capacities is given in Table 9-9.

Reported capacities in Table 9-9 are maximum, nominal figures, which do not include any allowance for outage like that estimated for the overall industry in Table 9-5. All of the largest plants are captive, and most of the merchant plants have very small capacities. Furnace coke production is concentrated in captive plants. Virtually all of the coke used in foundries and in other industries was produced by merchant plants. If coke plant sites were ranked according to capacity, the top five plant sites and top ten plant sites would have 30.9 percent and 45.8 percent of total coke capacity, respectively. (A plant site or location may include more than one complete plant.)

By-product coke plants are concentrated in the States bordering on the Ohio River, probably because of the coal in that area. Figure 9-3 shows

TABLE 9-9. COKE PLANTS IN THE UNITED STATES, January 1980[20,21]

Company name	Plant location	Classification of plant	Major uses of coke[a]	Coke capacity (thousand megagrams per year)
Armco, Inc.	Hamilton, OH	Captive	Blast furnace	542
	Houston, TX	Captive	Blast furnace	306
	Middletown, OH (2)[b]	Captive	Blast furnace	1,772
Bethlehem Steel Corp.	Bethlehem, PA	Captive	Blast furnace	2,067
	Burns Harbor, IN	Captive	Blast furnace	1,921
	Johnstown, PA	Captive	Blast furnace	381
	Lackawanna, NY	Captive	Blast furnace	1,623
	Sparrows Point, MD	Captive	Blast furnace	3,082
CF&I Steel Corp.	Pueblo, CO	Captive	Blast furnace	888
Crucible Steel, Inc.	Midland, PA	Captive	Blast furnace	414
Cyclops Corp. (Empire-Detroit)	Portsmouth, OH	Captive	Blast furnace	397
Ford Motor Co.	Dearborn, MI	Captive	Blast furnace	1,409
Inland Steel Co.	E. Chicago, IN (3)	Captive	Blast furnace	3,711
Interlake, Inc.	Chicago, IL	Captive	Blast furnace	581
J&L Steel Corp.	Aliquippa, PA	Captive	Blast furnace	1,215
	Campbell, OH	Captive	Blast furnace	1,089
	E. Chicago, IN	Captive	Blast furnace	1,377
	Pittsburgh, PA	Captive	Blast furnace	1,788
Kaiser Steel Corp.	Fontana, CA	Captive	Blast furnace	1,540

(continued)

TABLE 9-9. (continued)

Company name	Plant location	Classification of plant	Major uses of coke[a]	Coke capacity (thousand megagrams per year)
Carondelet Coke Company	St. Louis, MO	Merchant	Foundry, other industrial	232
Chattanooga Coke and Chemical Co.	Chattanooga, TN	Merchant	Foundry, other industrial	130
Citizens Gas and Coke Utility	Indianapolis, IN	Merchant	Foundry	476
Detroit Coke	Detroit, MI	Merchant	Blast furnace, foundry	616
Donner-Hanna Coke Corp.	Buffalo, NY	Merchant	Blast furnace	860
Empire Coke Co.	Holt, AL	Merchant	Foundry	120
Erie Coke and Chemicals	Painesville, OH	Merchant	Foundry	149
Indiana Gas and Chemical	Terre Haute, IN	Merchant	Foundry, other industrial	132
Ironton Coke Corp. (McLouth Steel)	Ironton, OH	Merchant	Blast furnace, foundry	858
Keystone Coke Co.	Swedeland, PA	Merchant	Foundry	401
Jim Walter	Birmingham, AL	Merchant	Blast furnace, foundry	994
Koppers Co., Inc.	Erie, PA	Merchant	Foundry, other industrial	207
	Toledo, OH	Merchant	Foundry	157
	Woodward, AL	Merchant	Blast furnace, foundry	562

(continued)

TABLE 9-9. (continued)

Company name	Plant location	Classification of plant	Major uses of coke[a]	Coke capacity (thousand megagrams per year)
Lone Star Steel Co.	Lone Star, TX	Captive	Blast furnace	506
National Steel Corp.	Granite City, IL	Captive	Blast furnace	712
	Detroit, MI	Captive	Blast furnace	1,928
	Weirton, WV	Captive	Blast furnace	1,111
	Brown's Island, WV	Captive	Blast furnace	1,095
Republic Steel Corp.	Cleveland, OH (2)	Captive	Blast furnace	1,755
	Gadsden, AL	Captive	Blast furnace	757
	Massillon, OH	Captive	Blast furnace	166
	S. Chicago, IL	Captive	Blast furnace	439
	Thomas, AL	Captive	Blast furnace	315
	Warren, OH	Captive	Blast furnace	943
	Youngstown, OH	Captive	Blast furnace	875
U.S. Steel Corp.	Clairton, PA (3)	Captive	Blast furnace	6,017
	Fairfield, AL	Captive	Blast furnace	1,818
	Fairless Hills, PA	Captive	Blast furnace	914
	Gary, IN	Captive	Blast furnace	4,220
	Lorain, OH	Captive	Blast furnace	1,491
	Provo, UT	Captive	Blast furnace	1,158
Wheeling-Pittsburgh	E. Steubenville, WV	Captive	Blast furnace	1,507
	Monessen, PA	Captive	Blast furnace	489
Alabama By-Products Corp.	Tarrant, AL	Merchant	Foundry, other industrial[c]	708
Allied Chemical Corp.	Ashland, KY	Merchant	Blast furnace	961

(continued)

TABLE 9-9. (continued)

Company name	Plant location	Classification of plant	Major uses of coke[a]	Coke capacity (thousand megagrams per year)
Milwaukee Solvay	Milwaukee, WI	Merchant	Foundry, other industrial	195
Philadelphia Coke (Eastern Assoc. Coal Corp.)	Philadelphia, PA	Merchant	Foundry, other industrial	291
Shenango, Inc.	Neville Island, PA	Merchant	Blast furnace, foundry	397
Tonawanda Coke Co.	Buffalo, NY	Merchant	Foundry	298

[a]An end use is considered a major use if it is at least 20 percent of the plant's total distribution of coke.

[b]Numbers in parentheses indicate the number of plants at that location. If no number is indicated, only one plant exists at that location.

[c]Residential and commerical heating included in other industrial category.

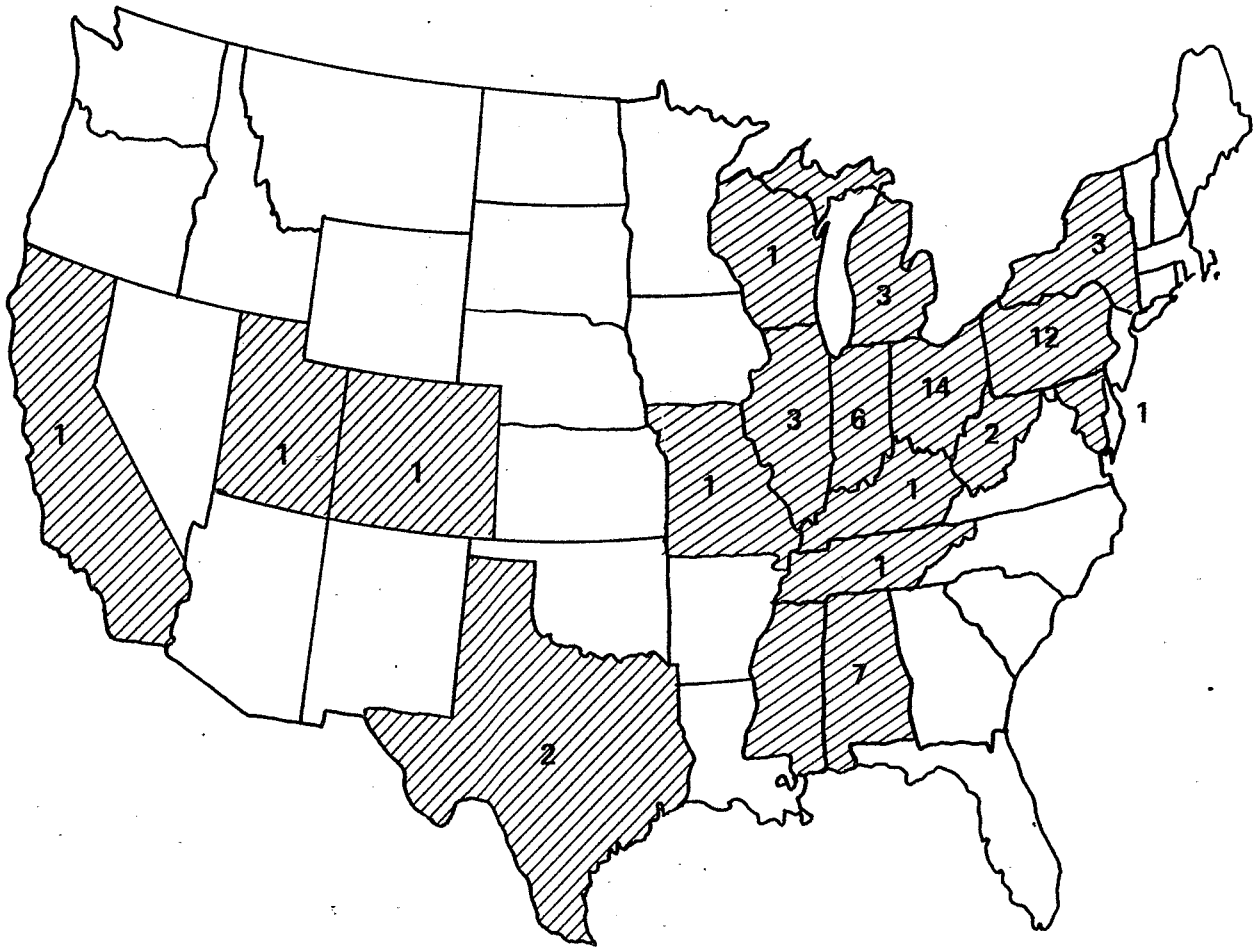

Figure 9-3. Coke plants in the United States, 1980.[38]

the number of coke plants in each State. Pennsylvania and Ohio contain 10 coke plants each, and Indiana has 8 plants.

Table 9-10 divides the United States into 11 coke-consuming and coke-producing regions and shows the amount of coke produced in each region and the locations of coke consumption. Most of the regions produce the bulk of the coke they consume; only three regions produce less than 80 percent of their own consumption and only one produces more than it needs for its own consumption. Transportation of coke across long distances is avoided whenever possible to reduce breakage of the product into smaller, less valuable pieces and to minimize freight charges.

The concentration of production or capacity in specific firms may have economic importance. Table 9-11 presents the percent of total capacity owned by the largest four (of 30) firms. The four-firm concentration ratio for the coke industry has changed little over the years. In 1959, the four-firm concentration ratio was 53.5 (the top four firms own 53.5 percent of total capacity)[40]; in 1980 it was 54.4 percent.

In the preceding discussion, furnace and foundry coke production are considered jointly. However, each existing coke battery may be considered a furnace or foundry coke producer, based on the battery's primary use. Separate capacity-based concentration ratios for the two types of coke are calculated based on this allocation. The 1980 four-firm concentration ratio for furnace coke is 60.0; the 1980 four-firm ratio for foundry coke is 57.8.

Concentration in the steel industry has economic relevance because a large fraction of all furnace coke is produced by integrated iron and steel companies. Historically, the eight largest steel producers have been responsible for approximately 75 percent of industry production. However, from 1950 to 1976, the share of production attributable to the top four firms declined from 62 percent to 53 percent.[41]

In summary, concentration exists in the production of both types of coke and in steel production. However, the concentration is not sufficient to guarantee market power, and many companies are involved in the production of both coke and steel products. Other factors must be considered in any final assessment of market power.

TABLE 9-10. INTERREGIONAL COKE SHIPMENTS IN 1977[22]
(10^3 megagrams)

Producing region	Consuming region											Total
	AL	CA, UT CO	MD, NY	IL	IN	KY, MO, TN, TX	MI	MN, WI	OH	PN	VA, WV	
Alabama	2,228	27	10	81	112	465	195	7	114	1	51	3,361
California, Colorado, Utah	0	2,668	0	0	0	0	0	0	0	0	0	2,668
Maryland, New York	0	3	4,392	123	0	22	88	0	6	8	0	4,642
Illinois	0	0	0	1,424	0	0	0	0	0	0	0	1,424
Indiana	0	5	0	69	7,594	35	97	11	62	3	0	7,876
Kentucky, Missouri, Tennessee, Texas	14	18	0	15	5	928	125	0	13	0	20	1,138
Michigan	0	0	0	0	7	1	2,639	0	6	0	0	2,653
Minnestoa, Wisconsin	0	6	0	269	70	1	61	158	5	1	0	571
Ohio	0	4	0	138	366	379	260	0	6,356	2	12	7,517
Pennsylvania	9	0	51	1,241	134	3	52	0	1,370	10,257	3	13,120
Virgina, West Virginia	0	0	0	0	0	8	412	0	0	214	2,465	3,099
TOTAL	2,251	2,731	4,453	3,360	8,288	1,842	3,929	176	7,932	10,556	2,551	48,069

TABLE 9-11. PERCENT OF COKE CAPACITY OWNED BY TOP FIRMS (JANUARY 1980)[35]

Firm	Capacity (10^3 Mg)	Percent of total capacity
U.S. Steel, Inc.	14,002	23.52
Bethlehem Steel Corp.	7,651	12.85
J&L Steel Corp.	5,469	9.19
Republic Steel Corp.	5,250	8.82
Sum of largest four firms	32,372	54.38

9.1.4.2 Integration Characteristics. When one firm carries out activities that are at separate stages of the same productive process, especially activities that might otherwise be performed by separate firms, that firm is said to be vertically integrated. Through vertical integration, the firm substitutes intrafirm transfers for purchases from suppliers and/or sales to distributors. A firm may seek to supply its own materials inputs to ensure a stable supply schedule or to protect itself from monopolistic suppliers. The firm may seek to fabricate further or distribute its own products to maintain greater control over the consuming markets or to lessen the chance of being shut out of the market by large buyers or middlemen. Therefore, the presence of vertical integration may constitute a firm's attempt to control costs or ensure input supplies. Vertical integration does not guarantee market power (control over market price).

Many coke-producing firms, especially furnace coke producers, are vertically integrated enterprises. As previously mentioned, 45 of the existing coke plants are captive; i.e., they are connected with blast furnaces and/or steel mills. In addition, many coke firms own coal mines, and greater than 61.0 percent of the coal used in ovens was from captive mines in 1979.[23] Assurance of coal supply to coke production and coke supply to pig iron production appears to be the motivation behind such integration.

One implication of vertical integration is that much of the furnace coke used in the United States never enters the open market--it is consumed by the producing company. Accordingly, the impact analysis for furnace coke (Section 9.2.2) uses an implied price for furnace coke based on its value in producing steel products, which are transferred on the open market.

9.1.4.3 Substitutes. Substitutes for a given commodity reduce the potential for market power in production of the commodity. The substitution of other inputs for coke in blast furnaces is somewhat limited, but not totally unfeasible. In addition, electric arc furnaces, which do not require coke, are becoming increasingly important in steel production. The recent trend toward electric arc furnaces and mini-mills has eased entry into the iron and steel industry, which in turn reduces market power.

Imported coke can also be substituted for domestically produced coke. In fact, although U.S. iron and steel producers prefer to rely on domestic sources of coke, coke imports have increased recently. If the cost of domestic coke increased substantially compared to the cost of imported coke, U.S. iron and steel producers might attempt to increase imports even more.

Furthermore, substitutes exist for the final products (iron and steel) to which coke is an input. Increases in the price of coke and the resulting increases in the price of iron and steel products can lead to some substitution of other materials for iron and steel, which also reduces market power in the production of coke. Analagous substitutions for foundry coke are possible, and cupola production of ferrous products, which uses foundry coke, has competition from electric arc furnaces that do not use coke. Hence, there is a technological substitute for foundry coke in the manufacture of ferrous products. Furthermore, imported foundry coke can be substituted for domestic foundry production. In conclusion, some substitution for coke is possible in the manufacture of both steel and ferrous products.

9.1.4.4 Pricing History. As previously indicated, a significant portion of all U.S. coke production is not traded on the market. However, the Bureau of Mines collects annual data on coke production and consumption and gives the quantity and the total value of coke consumed by producing industries, sold on the open market, and imported. Dividing total value by quantity yields an average price for each of these categories. Time-series data on these three average values are given in Table 9-12. (Furnace and foundry coke are combined in these figures.)

Also shown in Table 9-12 are data on the average value of coal that is carbonized in coke ovens. An examination of coke and coal prices reveals that increases in coal prices generally coincide with increases in coke prices. In fact, only 3 years show an increase in the price of coal that was not accompanied by an increase in the price of the two categories of coke. Although it is impossible to conclude from this trend that individual firms have market power, it indicates that the industry can pass through some increases in costs.

TABLE 9-12. COMPARISON OF COAL PRICES AND DOMESTIC AND IMPORTED COKE PRICES[2 4 7]

	Average value of coal carbonized in coke ovens[a,b] ($/Mg)	Average value of oven coke used by producers[a] ($/Mg)	Average value of oven coke sold commercially[a] ($/Mg)	Average value of imported coke[a,c] ($/Mg)
1950	9.56	14.26	14.54	13.34
1951	9.85	14.50	15.72	13.17
1952	10.17	15.11	17.63	15.96
1953	10.19	15.36	17.96	12.02
1954	9.92	17.33	18.95	11.98
1955	9.74	17.90	18.52	12.26
1956	10.31	19.39	20.27	12.38
1957	10.92	19.98	21.51	14.43
1958	10.90	19.82	21.90	14.25
1959	10.89	19.16	23.03	12.89
1960	10.90	19.92	22.32	13.06
1961	10.79	19.12	23.30	13.44
1962	10.86	19.53	23.36	14.42
1963	10.46	18.88	23.24	14.78
1964	10.23	19.17	22.85	16.10
1965	10.48	17.89	23.90	16.95
1966	10.78	18.40	24.49	20.60
1967	11.05	18.58	24.99	20.41
1968	11.03	19.57	24.25	22.31
1969	11.49	21.54	27.01	21.36
1970	13.46	30.30	33.04	25.46
1971	15.43	32.86	41.29	31.93
1972	17.34	35.76	44.87	27.70
1973	20.19	41.34	47.31	40.16
1974	40.22	82.32	72.47	60.14
1975	48.73	92.84	96.61	94.84
1976	48.68	93.83	104.01	93.35
1977	50.99	90.57	111.95	--
1978	57.37	105.79	118.03	--

[a]Both furnace and foundry coke and the coals used to produce furnace and foundry coke are included in these figures.

[b]Market value at the oven (current dollars).

[c]General customs value as reported by the Department of Commerce (current dollars).

9.1.4.5 Market Structure Summary. Although there is no perfect method for measruing the extent of market power, the preceding sections addressed four characteristics used to measure the potential for market power--concentration, integration, substitution, and historical price trends. Concentration statistics indicated that some potential for market power exists in the coke industry, yet, these statistics are not conclusive proof. Similarly, vertical integration in the steel industry is not conclusive in identifying the presence of market power because vertical integration is a method of controlling the cost and ensuring the quality and supply of inputs. Finally, the possibility of substitution represents a strong argument against the existence of extensive market power in the coke-making industry.

9.1.5 Financial Performance

Financial data on many of the coke-producing firms or their parent firms, including captive and merchant furnace and foundry producers, are shown in Table 9-13. (Data for other firms were not available.) From the financial data in Table 9-13, three ratios have been calculated for each company (Table 9-14). The first, a liquidity ratio, is a measure of a firm's ability to meet its current obligations as they are due. A liquidity ratio above 1.0 indicates that the firm is able to pay its current debts with its current assets; the higher the ratio, the bigger the difference between current obligations and the firm's ability to meet them. All of the coke-producing firms have liquidity ratios between 1.0 and 3.0. These figures are consistent with liquidity ratios for firms in a wide variety of manufacturing industries.

The second ratio, a coverage ratio, gives an indication of the firm's ability to meet its interest payments. A high ratio indicates that the firm is more likely to be able to meet interest payments on its loans. This ratio can also be used to determine the ability of a firm to obtain more loans. The coverage ratio of the coke-producing firms ranged from 1.5 to 15.5. Such ratios are equal to or higher than the coverage evidenced in most manufacturing industries.

The last of the ratios, a leverage ratio, indicates the relationship between the capital contributed by creditors and that contributed by the owners. Leverage magnifies returns to owners. Aggressive use of debt

TABLE 9-13. FINANCIAL INFORMATION ON COKE-PRODUCING FIRMS, 1978[25]
(thousand 1978 dollars)

Company name[a]	Net sales	EBIT[b]	Cash flow	Net working capital	Current assets	Current liabilities
Armco, Inc.	4,357,285	399,149	337,071	631,950	1,270,810	638,860
Bethlehem Steel Corp.	6,184,900	396,500	547,000	597,900	1,601,400	1,003,500
CF&I Steel Corp.	475,143	18,005	49,987	41,909	115,720	73,811
Crucible Steel, Inc.	1,807,882	192,444	131,212	503,441	835,953	332,512
Cyclops Corp.	779,345	40,655	33,595	95,808	224,360	128,552
Ford Motor Co.	42,784,100	2,973,500	2,902,600	3,092,600	12,370,600	9,278,000
Inland Steel Co.	3,248,008	284,601	273,653	326,357	810,129	483,772
Interlake, Inc.	921,127	25,188	33,500	163,348	340,782	177,434
J&L Steel Corp.	2,573,577	69,900	111,080	130,020	617,920	487,900
Kaiser Steel Corp.	711,983	79,560	53,127	66,970	223,229	156,259
Northwest Industries, Inc.	2,359,700	325,600	220,200	458,800	811,800	353,000
National Steel Corp.	3,788,681	261,150	260,513	543,151	1,308,862	765,711
Republic Steel Corp.	3,479,458	299,933	211,635	470,862	928,604	457,742
U.S. Steel Corp.	11,049,500	441,400	7,450,600	1,363,800	3,406,900	2,043,100
Wheeling-Pittsburgh	1,161,597	38,899	53,562	133,855	345,312	211,457
Alabama By-Products Corp.	201,072	29,076	26,334	33,559	61,319	27,760
Allied Chemical Corp.	3,267,956	336,617	323,214	279,663	926,494	646,831
Diamond Shamrock Corp.	1,677,602	241,354	241,273	280,004	571,692	291,688
McLouth Steel	677,849	29,649	34,111	70,799	201,252	130,453
Jim Walter	1,672,344	218,731	127,490	571,557	1,152,690	581,133
Koppers Co., Inc.	1,581,876	141,894	128,662	292,591	528,569	235,978
Philadelphia Coke	665,861	37,471	51,279	63,178	179,919	116,741

(continued)

TABLE 9-13. (continued)

Company name	Annual interest expense	Total assets	Long term debt	Tangible net worth
Armco, Inc.	57,393	3,095,519	484,603	1,572,452
Bethlehem Steel Corp.	86,400	4,933,200	182,000	2,360,200
CF&I Steel Corp.	5,960	402,900	57,286	209,527
Crucible Steel, Inc.	29,804	1,263,813	294,296	563,541
Cyclops Corp.	4,142	371,759	40,078	167,172
Ford Motor Co.	194,800	22,101,400	1,144,500	9,686,300
Inland Steel Co.	49,511	2,597,552	652,140	1,254,379
Interlake, Inc.	11,600	658,415	136,169	306,311
J&L Steel Corp.	26,593	1,845,508	397,701	743,582
Kaiser Steel Corp.	29,422	1,044,787	347,020	481,530
Northwest Industries, Inc.	56,800	1,933,700	580,600	811,200
National Steel Corp.	54,076	3,130,041	394,356	1,342,809
Republic Steel Corp.	36,800	2,584,869	447,119	1,409,511
U.S. Steel Corp.	191,400	10,536,300	2,194,500	5,281,000
Wheeling-Pittsburgh	15,479	793,226	189,024	357,147
Alabama By-Products Corp.	9,857	243,977	89,549	105,916
Allied Chemical Corp.	68,696	3,227,949	741,008	1,272,324
Diamond Shamrock Corp.	55,391	2,056,992	666,461	878,038
McLouth Steel	15,802	453,587	128,773	180,607
Jim Walter	63,136	1,809,501	514,915	598,267
Koppers Co., Inc.	13,190	1,034,207	221,264	519,657
Philadelphia Coke	21,684	850,615	243,633	342,987

[a]Parent firms of captive coke plants are listed first, followed by parent firms of merchant producers.

[b]EBIT = earnings before interest and income taxes.

TABLE 9-14. FINANCIAL RATIOS FOR COKE-PRODUCING FIRMS

Company name	Liquidity ratio[a]	Coverage ratio[b]	Leverage ratio[c]
Armco, Inc	1.99	6.95	1.97
Bethlehem Steel Corp.	1.60	4.59	2.09
CF&I Steel Corp.	1.57	3.02	1.92
Crucible Steel, Inc.	2.51	6.46	2.24
Cyclops Corp.	1.75	9.82	2.22
Ford Motor Company	1.33	15.26	2.28
Inland Steel Co.	1.67	5.75	2.07
Interlake, Inc.	1.92	2.17	2.15
J&L Steel Corp.	1.27	2.63	2.48
Kaiser Steel Corp.	1.43	2.70	2.17
Northwest Industries, Inc.	2.30	5.73	2.38
National Steel Corp.	1.71	4.83	2.33
Republic Steel Corp.	2.03	8.15	1.83
U.S. Steel Corp.	1.67	2.31	2.00
Wheeling-Pittsburgh	1.63	2.51	2.22
Alabama By-Products	2.21	2.95	2.30
Allied Chemical Corp.	1.43	4.90	2.54
Diamond Shamrock Corp.	1.96	4.36	2.34
McLouth Steel	1.54	1.88	2.51
Jim Walter	1.98	3.46	3.02
Koppers Co., Inc.	2.24	10.76	1.99
Philadelphia Coke	1.54	1.73	2.48

[a]Liquidity ratio $= \frac{\text{Current assets}}{\text{Current liabilities}}$

[b]Coverage ratio $= \frac{\text{EBIT}}{\text{Annual interest expense}}$

[c]Leverage ratio $= \frac{\text{Total liabilities}}{\text{Tangible net worth}}$

increases the chance of default and bankruptcy. The chance of larger returns must be balanced with the increased risk of such actions. The leverage ratio indicates the vulnerability of the firm to downward business cycles. Also, a high ratio reveals a low future debt capacity, i.e. additions to debt in the future are less likely. The firms with coke-making capacity had leverage ratios that ranged from 1.8 to 3.0. These figures are relatively high among leverage ratios for firms in many manufacturing industries. Firms with coke-making capacity are engaged in substantial amounts of debt financing.

Another measure of financial performance is the rate of return on equity. Studies of the iron and steel industry show low rates of return on equity. In an analysis performed by Temple, Barker, and Sloane, Inc. (TBS), the real (net of inflation) rate of return in the steel industry was estimated to be 0.2 percent for the period 1970 to 1980. The TBS analysis projects a rate of return on equity of 1.0 percent for 1980 to 1990.[44] These estimates of historical and projected return on equity compare very poorly with estimates of the required return on investment in the steel industry. A difference between realized and required returns implies that equity financing of capital expenditures may be difficult.

As noted, low rates of return on equity affect common stock prices and have implications for future investment financing, including environmental control expenditures. For the steel industry, issuing new stock to raise investment capital is unlikely under current circumstances. If environmental and other control investments cannot be financed through new equity, another source of funds must be found. Increased debt is one potential source. However, firms with coke-making capacity already have incurred substantial amounts of debt. The TBS analysis concludes that to avoid deterioration in its financial condition, the steel industry is likely to reduce expenditures to modernize productive facilities rather than increase its external financing.[45]

9.1.6 Projections

The demand for coke is derived from the demand for steel produced by processes that utilize coke. Hence, projection of the future production of steel by process type is a necessary precursor to the development of projections of coke production and coke capacity requirements.

In the initial study, steel industry projections developed by Data Resources Incorporated (DRI) were used. However, the DRI projections developed during 1979 are for a short time period (up to 5 years), whereas projections of the economic impact of the quench tower standard are required for years up to 1995. A revised projection of steel production by process type (basic oxygen furnace, open hearth, and electric arc) for 1985, 1990, and 1995 has been developed and is presented in Table 9-15. This projection is based on two sources:

1. "Environmental Policy for the 1980's: Impact on the American Steel Industry," Arthur D. Little, Inc. 1981.

2. Memorandum from Don Anderson, Economics Department, Research Triangle Institute, to Dave McLamb, U.S. Environmental Protection Agency. November 20, 1981.

In developing the projections for 1995, it is assumed that the growth of the projected variables between 1990 and 1995 will be the same as the growth pattern between 1980 and 1990.

Table 9-16 presents the projection of furnace-coke consumption, furnace-coke production, and furnace-coke imports for 1985, 1990, and 1995. The projected furnace-coke consumption is based on a continuation of historical trends of furnace-coke consumption in hot-steel production (steel produced in basic oxygen and open-hearth furnace processes) and the projected steel production presented in Table 9-15. Furnace coke capacity requirements are projected assuming a capacity utilization rate of 85 percent by the coke producers during the period.

Coke capacity projection is sensitive to the level of coke imports. Hogan and Koelble[46] assert that coke suppliers in western Europe and Japan, which are the major foreign coke suppliers to the U.S. steel industry, are not likely to export substantial additional quantities to the United States, in spite of the fact that U.S. coke imports have been growing steadily. If so, coke imports for 1985 and 1995 are more likely to remain at about the 1985 level of imports of 3.5 million Mg during the 1985-95 period. In Table 9-17, the coke capacity (furnace coke plus foundry coke) is projected under two scenarios: Scenario 1 is the long-run capacity projection of Table 9-15, and Scenario 2 is the capacity projection, assuming coke imports at the projected 1985 level through 1995.

TABLE 9-15. SUMMARY OF THE PROJECTIONS FROM THE LINEAR MODEL[a]

Variable	Projections 1985	Projections 1990
1. World coke production	427,015	460,270
2. Furnace coke production[b]	39,893	35,933
3. Foundry coke production[b]	2,959	2,914
4. Furnace coke consumption	43,440	40,660
5. Foundry coke consumption	2,536	2,491
6. Coke imports	3,547	4,727
7. Coke exports[c]	423	423
8. Coke capacity	49,115	49,115[d]
9. Capacity utilization[e]	84.37	80.52
10. Coal rate	1.40	1.36
11. Capital/output ratio	14.00	18.59
12. VMP of coke[f] (1979 $/Mg)	208.27	262.55

Note: Figures for variables 1-8 are in thousand megagrams.
Figures for variable 9 are in percent.
Figures for variable 10 are in megagrams of coal per megagrams of coke.
Figures for variables 11-12 are in current dollars per megagram.

[a]The projection methodology includes no explicit assumption of additional controls like those assessed in this report. Projections are based on normal growth and intended to represent long-run trends in the industry.

[b]U.S coke production = coke demand + coke exports - coke imports.

[c]Assumed constant throughout the decade.

[d]1990 coke capacity is assumed to equal 1985 coke capacity.

[e]Capacity utilization = U.S. coke production/coke capacity.

[f]VMP stands for value of marginal product. This is a measure of the implied price of furnace coke based on its value in the production of steel products. Historical estimates of VMP were based on econometric analysis of production functions for steel.

TABLE 9-16. SUMMARY OF STEEL INDUSTRY PROJECTIONS

Variable	Projections 1985	Projections 1990
1. U.S. steel production[a]	132,723	137,713
2. Proportion, basic oxygen furnace[a]	64.25	66.50
3. Proportion, electric arc furnace[a]	27.83	30.98
4. Proportion, open hearth furnace[a]	7.92	2.52
5. U.S. steel consumption[b]	154,442	162,534
6. Steel imports	23,913	27,298
7. Steel exports	2,194	2,477
8. Labor productivity	347.04	411.39
9. Producer price index of steel mill products (1967 = 100)	287.5	323.5
10. Producer price index of ferrous scrap (1967 = 100)	324.7	383.2

Note: Figures for variables 1 and 5-7 are given in thousand megagrams.
Figures for variables 2-4 are in percent.
Figures for variable 8 are in thousand megagrams per employee.

[a]Based on estimates by Data Resources, Inc.[28]

[b]Steel consumption = steel production + steel imports - steel exports.

TABLE 9-17. PROJECTIONS OF COKE CAPACITY REQUIREMENTS[a]
1985, 1990, and 1995

Capacity requirements scenario	Projections (10^3 Mg/yr)		
	1985	1990	1995
1	49,587 [46,106]	48,578 [45,149]	47,558 [44,182]
2	49,587 [46,106]	49,966 [46,538]	50,334 [46,959]

[a]Coke capacity includes furnace and foundry coke. Figures in brackets represent furnace coke capacity.

Note: Scenario 1 assumes imports to grow at the long-term trend; Scenario 2 assumes the imports for 1990 and 1995 at the 1985 trend level.

Forecasts of U.S. coke demand are very sensitive to forecast steel production and technology. Other projections have been made of domestic coke needs in 1985. In a Merrill Lynch Institutional Report, Charles Bradford forecast furnace coke consumption for 1985 at between 38.1 and 43.5 million megagrams.[43] Blast furnace consumption assumed to be 92 to 93 percent of total coke consumption (figures for recent years) corresponds to a forecast of total coke demand of 41 to 46 million megagrams. The projection presented in this report is at the high end of that range. However, Hogan and Koelble and Lawrence R. Smith (Koppers) forecast a much higher coke demand for 1985. They project the demand for furnace coke alone at 51.7 to 53.5 million megagrams.[28] These sources do not directly address foundry coke demand; consequently, the projections for foundry coke production cannot be compared.

9.1.7 Market Behavior: Conclusions

Market structure, financial performance, and potential growth influence the choice of a methodology to describe supply responses in the coke-making industry. Although some characteristics of this industry indicate a potential for market power, other characteristics belie it.

Some concentration exists in coke-making capacity and steel production; however, many firms produce coke and iron and steel products. Vertical integration is substantial; however, integration appears to result primarily from a desire for increased certainty in the supply of critical inputs. Furthermore, substitution through alternative technologies and coke imports is feasible, and some substitutes for the industry's final products (iron and steel) are available. In any industry, the potential for substitution is a major factor leading to competitive pricing. Certainly, the financial profile of coke-making firms is not indicative of monopoly profits. Prospects for industry growth are limited. An individual firm must actively compete with other firms in the industry to improve its profit position.

No industry matches the textbook definition of perfect competition. The important issue is whether or not the competitive model satisfactorily captures major behavioral responses of firms in the industry. Based on the factors outlined in this section, the competitive pricing model adequately describes supply responses for coke-making firms.

9.2 ECONOMIC IMPACT OF REGULATORY ALTERNATIVES

9.2.1 Summary

Economic impacts have been projected for the baseline and for each regulatory alternative. Furnace and foundry coke impacts are examined separately because their production costs and markets differ. All cost and price impacts are in third-quarter 1979 dollars. To convert to 1982 dollars, multiply by 1.25 which is the ratio of the 1982 producer price to the same index for the third quarter of 1979, as updated in the Survey of Current Business.[46 47] When measured on a per-unit basis, the costs of meeting baseline regulations for foundry coke plants tend to be greater than those for furnace coke plants for two reasons. First, some economies of scale are present for some of the controls. Foundry plants tend to be smaller than furnace plants, thus, they have higher per-unit control costs. Second, for a given battery, foundry coke output will be less than furnace coke output because foundry coke coking time is about two-thirds longer than furnace coke coking time.

Recovery credits cause Regulatory Alternative II to result in annualized costs of $-1 million for furnace and foundry coke producers combined. Regulatory Alternative II requires capital expenditures of $23 million for furnace and foundry coke producers combined. Regulatory Alternative III would result in annualized costs of $42 million and capital costs of $161 million for the combined furnace and foundry coke sectors. Full compliance with baseline regulations measured against the existing state of control results in annualized costs of $436 million and capital costs of $1,159 million.

Price impacts are estimated under the empirically supported assumption that furnace coke demand is responsive to higher coke prices. Foundry coke demand is also assumed to respond to price. Regulatory Alternative II would have negligible impacts of $0.02/Mg and $0.19/Mg (less than 0.10 percent change) on the prices of furnace and foundry coke, respectively (1979 dollars). Regulatory Alternative III would result in furnace and foundry coke price increases of $0.70/Mg (0.05 percent) and $1.44/Mg (0.77 percent), respectively. Compliance with baseline regulations measured against the existing state of control increases the furnace coke price by 6.4 percent and the foundry coke price by 15.4 percent.

Regulatory Alternatives II and III would have little impact on the production of either furnace or foundry coke. Complete compliance with baseline regulations measured against existing compliance would decrease furnace production by 6.6 percent and foundry production by 12.2 percent. Complete compliance with baseline regulations produces three potential furnace battery closures and five potential foundry battery closures. The regulatory alternatives are not projected to result in any battery, plant, or company closures.

9.2.2 Methodology

The following approach focuses on the long-run adjustment process of furnace and foundry coke producers to the higher costs of coke production that the baseline and the regulatory alternatives will create. These long-run adjustments involve investment and shutdown decisions. Short-run adjustments, such as altering coking times, to meet the fluctuations in the demand for coke are not the subject of this analysis.

Because of differences in production costs and markets, furnace and foundry coke producers are modeled separately. Both are assumed to behave as if they were competitive industries selling coke in a market. This assumption is somewhat more realistic for foundry than for furnace coke producers because most furnace coke is produced in plants captive to the steel industry. However, interfirm and intrafirm shipments of coke are not uncommon, as can be inferred from Table 9-10. A plant-by-plant review of the coke industry by Hogan and Koelble also confirms the existence of such exchanges.[48]

A set of programmed models has been developed to produce intraindustry and interindustry estimates of the economic impacts of the alternative regulations. The models are applied to both furnace and foundry coke, and the sectors included are coke, steel, and ferrous foundries. The rest of the economy is incorporated into the interindustry portion of the analysis.

The analytical approach incorporates a production cost model of the coke industry based on engineering data, an econometric model of the steel industry, and an input-output model of the rest of the economy and final demand. The interrelationships of these models for furnace coke are shown in Figure 9-4. The upper portion of Figure 9-4 encompasses the supply side impacts of the regulatory alternatives; the lower portion contains the

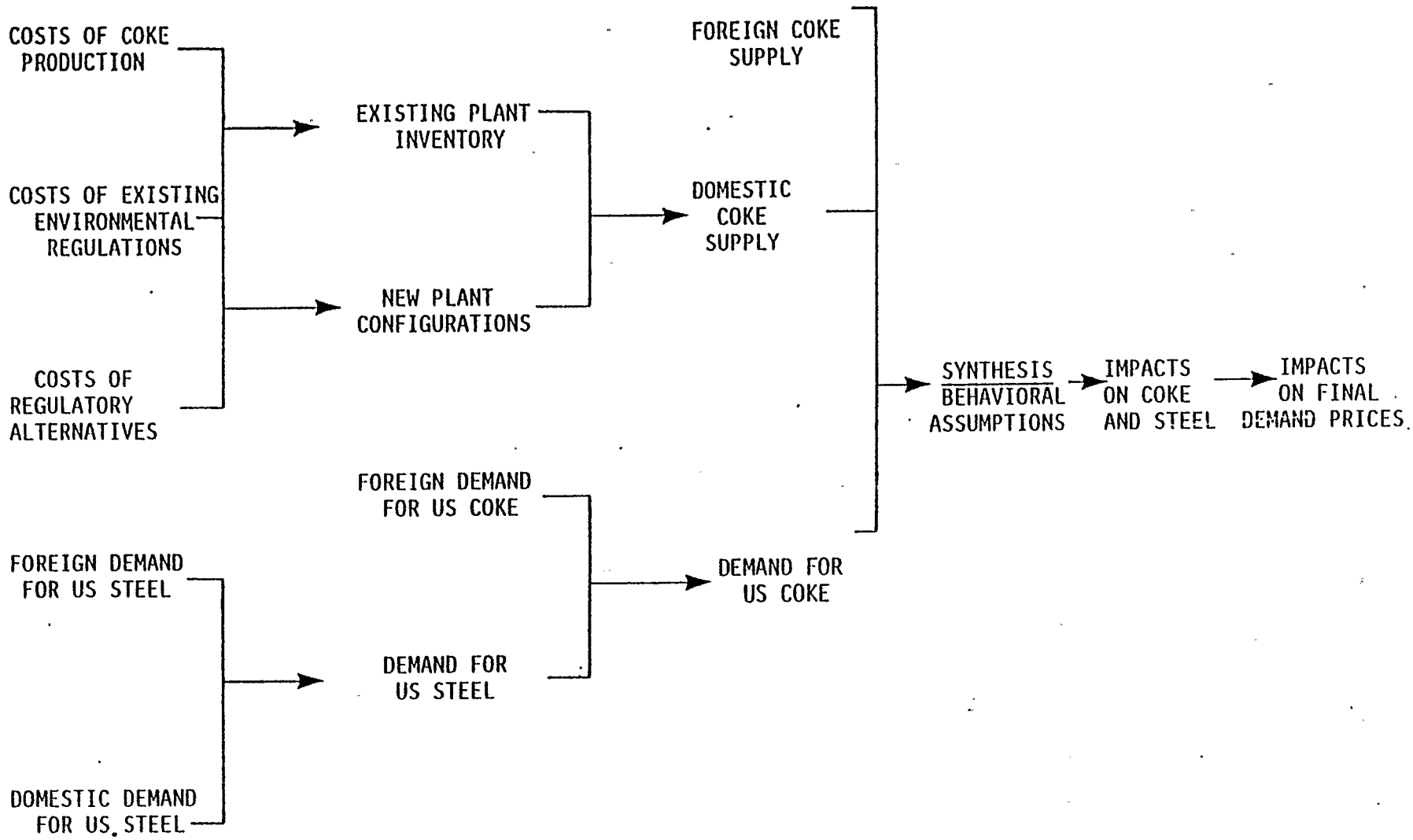

Figure 9-4. Economic impact model.

demand side impacts. In the synthesis step, the two sides are brought together and the equilibrium price and quantity relationships are determined. An analogous diagram for foundry coke would substitute ferrous foundry products for steel. The methodology is described further in the following subsections.

9.2.2.1 Supply Side. A production cost model that incorporates technical relationships and engineering cost estimates is used with plant-specific information to compute separate industry supply functions, with and without additional controls.[49] Supply functions are estimated on a year-by-year basis for furnace and foundry coke plants projected to be in existence between 1980 and 1990. Both coke production costs and the costs that plants incur to meet existing environmental regulations are computed to estimate the industry supply curve before any additional controls are applied. Estimates of the costs of control for further compliance with the baseline regulations and the regulatory alternatives are used to compute the projected upward shifts in that supply function. All costs are in 1979 dollars.

This approach provides a method of estimating the industry supply curve for coke, which shows the alternative coke quantities that will be placed on the market at alternative prices. When the supply curve is considered in conjunction with the demand curve, an equilibrium price and coke output rate can be projected. Supply curve shifts caused by the regulatory alternatives can be developed from the compliance cost estimates made by the engineering contractor. These new supply functions, along with the demand curve, can then be used to compute the equilibrium price and output rate under each regulatory alternative.

9.2.2.1.1 Data base. Plant-by-plant data on over 60 variables for furnace and foundry coke plants in existence in 1979 were compiled from government publications, industry contacts, and previous studies of the coke industry. The data base was sent to the American Iron and Steel Institute, which submitted it to their members for verification, corrections, and additions,[50] and to the American Coke and Coal Chemicals Institute.

9.2.2.1.2 Output relationships. For a given battery, the full capacity output of coke, measured in megagrams per year, is dependent on the nominal coal charge (megagrams of coal per charge) per oven, the number of ovens, and the effective gross coking time (net coking time plus decarbonization time). The following values for effective gross coking time were used except where plant-specific values were available.[49 50]

	Furnace coke	Foundry coke
Wet coal	18 hours	30 hours
Preheated coal	13 hours	24 hours

An age-specific outage rate that varies from 4 to 10 percent is assumed to allow for normal maintenance and repair. Thus, the model assumes some increase in such costs as plants age.

The quantities of by-products produced are estimated from engineering relationships. These quantities depend on the amount of coal carbonized, percentage of coal volatile matter, coking time, and configuration of the by-product facility at a plant. The by-products included in the model are coke breeze, coke oven gas, tar, crude light oil, BTX, ammonium sulfate, anhydrous ammonia, elemental sulfur, sodium phenolate, benzene, toluene, xylene, naphthalene, and solvent naphtha. All plants are assumed to produce breeze and coke oven gas.

9.2.2.1.3 Operating costs. The major costs of operation for a coke plant are expenditures for coal, labor, utilities, and chemicals. The activities within the coke plant were allocated to five production and ten environmental control cost centers (Figure 9-5) to facilitate the development of the operating cost estimates.

Coal is the major operating cost item in coke production. Plant-specific estimates of the delivered price of coal were developed by identifying the mine that supplies each plant and estimating transportation costs from the mine to the plant. When it was not known which coal mine supplied a particular plant, it was assumed that the coal came from the nearest mines supplying coal of the same volatile matter and ash content as that used by the plant. Transportation cost estimates were based on the distances traveled and the transport mode (barge or rail) employed.

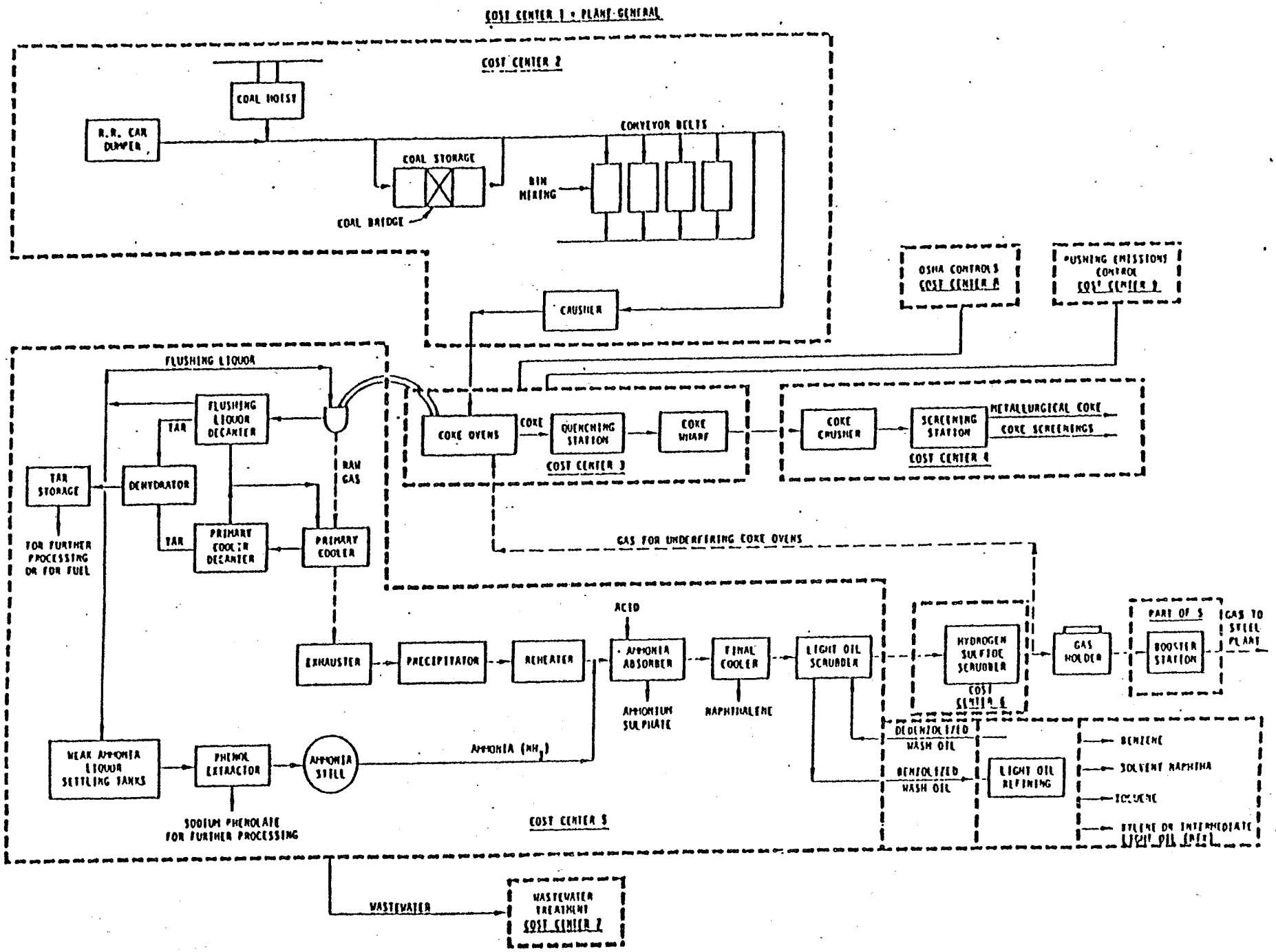

Figure 9-5. Coke plant cost centers.

Maintenance labor and supervision requirements were estimated for 69 jobs within the coke plant. Primary variables that determine the number of maintenance labor and supervision man-hours needed include type of plant (merchant or captive), number of battery units, number of plants at a site, size of by-product plant, type of coal charge (wet or preheated), and coke production. The labor rates used for captive plants were $17.04/h for supervisory positions and $15.70/h for production labor. For merchant plants, rates of $15.80/h and $14.40/h were assumed.

The major utilities at a coke plant are steam, electricity, water, and other fuels. Utility requirements were estimated from the data on the plant configuration and output rates for coke and the by-products. The prices used for the utilities are $5.44/10^3 lb steam; $0.027/kWh electricity; $0.16/10^3 gal cooling water; and $2.76/10^6 Btu underfire gas.

9.2.2.1.4 Capital costs. Although no net additions to industry coke-making capacity are anticipated during the 1980 to 1990 period, a number of producers have plans to rebuild or replace existing batteries. Such actions will alter the long-run industry supply curve because the new batteries will typically have lower operating costs per unit of output than the batteries they replace and, most importantly, their capital costs will be reflected in the new supply curve. Hogan and Koelble[43] have identified plant-by-plant rebuild/replacement intentions. These plans are included in the data base. The cost of building a model new coke battery and the cost of major rehabilitation of an existing battery have been estimated for the affected facilities. It has been assumed that new furnace construction will be 6-meter batteries and new foundry construction will be 4-meter batteries. Pad-up rebuilds are assumed to leave the battery size unchanged. Pad-up rebuild costs were estimated as a function of battery size. A zero salvage value is assumed for existing batteries.

The capital cost breakdown for new plants is shown in Table 9-18. For such plants, the major capital cost items are the battery, quench tower, quench car, pusher machine, larry car, door machine and coke guide, by-product plant, coal handling system, and coke handling system. A 60-oven battery is assumed. Pipeline charging can increase the coke-making capacity of a given oven by about 25 percent by reducing gross coking time.

TABLE 9-18. ESTIMATED CAPITAL COSTS OF NEW BATTERIES[51]

	Conventionally charged battery		Pipeline charged battery	
	4-meter[a]	6-meter[a]	4-meter[a]	6-meter[a]
Capacity (10^3 Mg/yr)	450	720	560	900
Capital costs by element (10^6 1979 dollars)				
Coke battery	34.20	48.90	64.60	83.70
Quench tower with baffles	2.45	2.85	2.45	2.85
Quench car and pushing emissions control	6.58	7.92	6.58	7.92
Pusher machine	2.50	3.20	2.40	3.20
Air-conditioned larry car	1.72	2.28	0	0
Door machine and coke guide	1.80	2.10	1.80	2.10
By-product plant	32.50	39.75	35.76	43.74
Coal-handling system	18.20	23.60	20.62	26.70
Coke-handling system	6.85	8.80	7.74	10.00
Offsites	1.60	1.80	1.69	1.91
Total	$108.40	$141.20	$143.74	$182.12

[a]In the production cost model, new foundry batteries were assumed to be 4-meter batteries and new furnace batteries were assumed to be 6-meter batteries.

Consequently, the per-unit operating cost is reduced. The capital costs show economies of scale, i.e., larger plants have smaller per-unit-of-capacity capital costs. The capital cost per unit of capacity is higher for pipeline-charged batteries than for conventionally charged batteries.

Periodically, batteries must undergo major rehabilitation or rebuilding because of performance deterioration. The costs of pad-up rebuilds will vary from site to site depending on battery maintenance, past operating practices, and other factors. Average estimates of the cost of rebuilding were developed for this study and are shown in a report by PEDCo.[49] The economic life of coke-making facilities is subject to considerable variation depending upon past maintenance and operating practices, which also affect current operating costs. For this study, 25 years was used as the average preferred life of a new coke-making facility; however, many batteries are operated for 35 to 40 years. If 35 to 40 years is a more reasonable battery lifetime, use of a 25-year lifetime will result in some overestimation of the annual costs of new or rebuilt facilities. However, firms will probably not plan or expect to wait 35 to 40 years to recoup an investment in coke-making capacity.

9.2.2.1.5 Environmental costs. Plant-specific estimates of the installed capital and operating costs for current and proposed environmental regulations and the regulatory alternatives under consideration in this study were incorporated in the model. The current and proposed regulations include workplace standards (Occupational Safety and Health Administration) [OSHA], water quality regulations best practicable technology [BPT] and best available technology [BAT], State implementation plan (SIP) requirements, and proposed air quality regulations for topside, charging, and door leaks (National Emission Standard for Hazardous Air Pollutants) [NESHAP] and quench towers (New Source Performance Standards [NSPS]. Compliance expenses already incurred for all plants in the data base for each of the current and proposed regulations (existing control costs) were estimated. Therefore, it was possible to estimate the remaining environmental costs to plants to meet current and proposed regulations (baseline control costs). It has been assumed that costs to comply with

OSHA and BPT water requirements under the Federal Water Pollution Control Act will have to be incurred by 1981. Costs for all other existing environmental regulations are assumed to be incurred by 1983.

The scatter diagrams in Figures 9-6 and 9-7 show estimates from the coke supply model of average total cost of production in 1980, including environmental costs, for all furnace and foundry coke plants. A weak, inverse relationship between the average cost of production and the size of the plant is evident in Figures 9-6 and 9-7. However, a number of other factors create variability in the average cost of production across coke plants. The most important of these factors are the delivered price of coal, the age of the plant, and the by-products recovered.

9.2.2.1.6 Coke supply function--existing facilities. The operating and capital cost functions were used to estimate the cost of production, including relevant environmental costs, for all plants in the data base. This cost does not include a return on investment for existing facilities. The capital costs for these facilities have already been incurred and do not affect operating decisions.

Capital costs that have not yet been incurred are annualized at 6.2 percent, which is estimated to be the real (net of inflation) cost of capital for the coke industry. (This percentage is an after-tax estimate.) This figure, which was estimated from data on the capital structure for publicly owned steel companies, has been used in this study as the minimum acceptable rate of return on new facilities.[52]

The capital costs of controls affixed to coke oven batteries are annualized under two different assumptions. For scenario A, it is assumed that when a battery reaches the end of its useful life, it is rebuilt or replaced by a battery of the same height. If this situation occurs, most of the control equipment is salvageable.[53] Accordingly, under scenario A, each annualization is performed over the life of the control equipment.

However, not every battery is rebuilt or replaced at the end of its useful life. Similarly, some old batteries are replaced by new batteries that are not comparable in size (height). In such cases, capital expenditures for affixed controls must be recouped by the time battery retirement occurs. Under scenario B, this control equipment is assumed to be completely unsalvageable. Annualizations are performed over the remaining

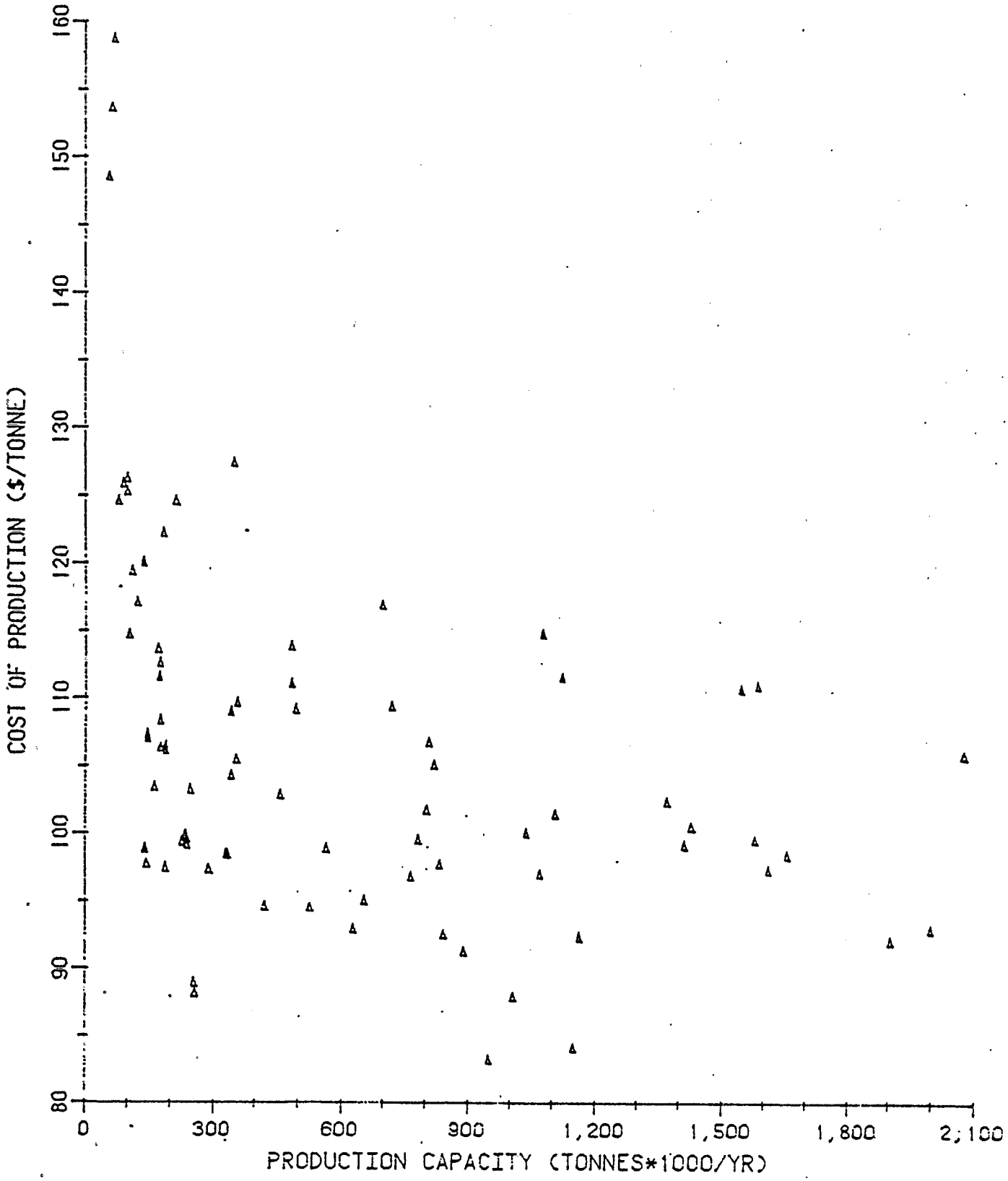

Figure 9-6. Estimated average cost of furnace coke production as a function of plant production, 1980.

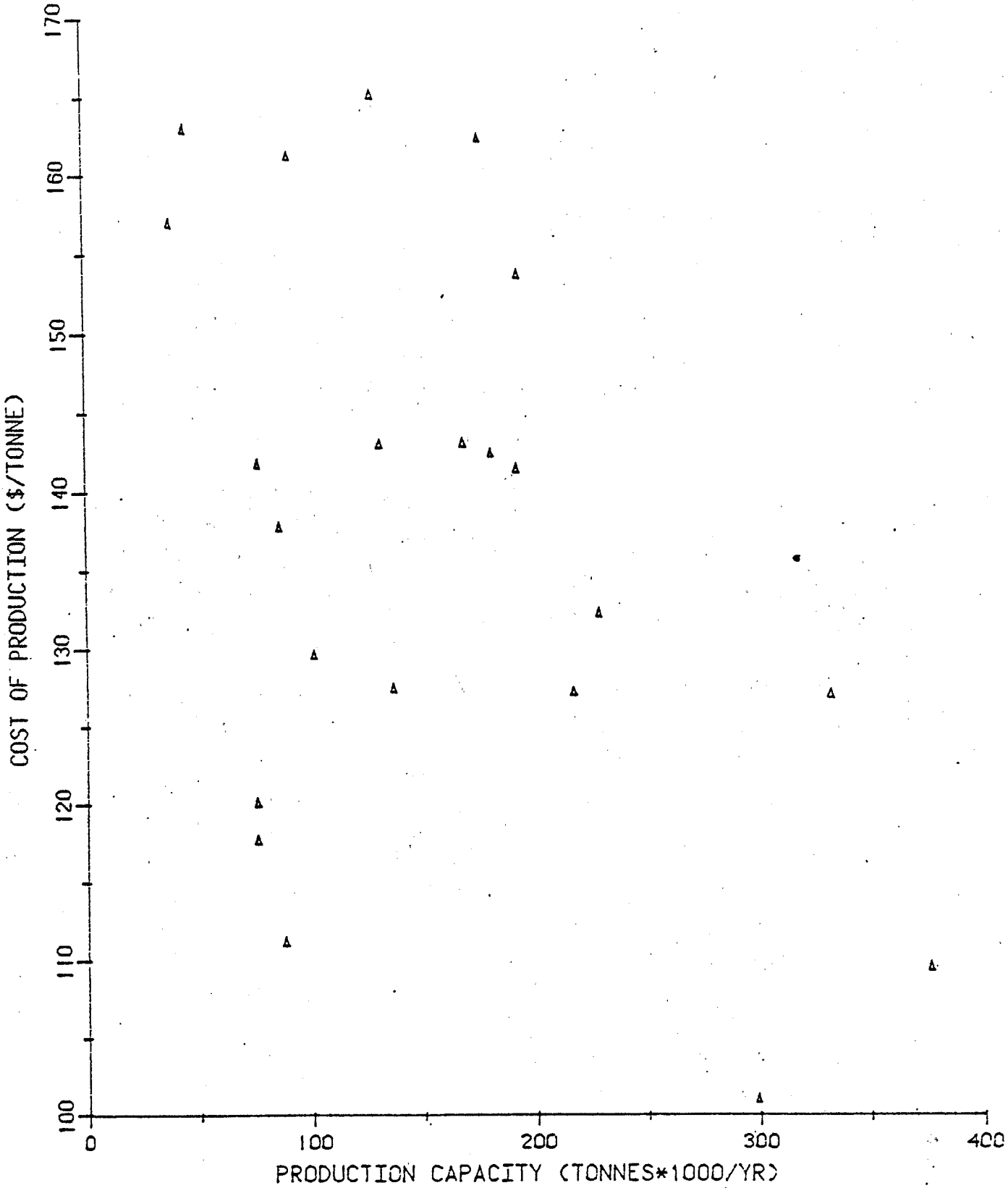

Figure 9-7. Estimated average cost of foundry coke production as a function of plant production, 1980.

life of the battery or over the control life, whichever is smaller. Estimates of remaining life for existing batteries are based on a long total life (40 years) because some batteries are being kept in operation for 40 years. While 40 years is longer than the preferred average life of a battery, it is not necessarily longer than the battery's realized life.

The regulatory alternatives for coke oven by-product plants involve control equipment that is not affixed to batteries. Accordingly, the equipment is not affected by battery age or size (height) of the battery replacement. The capital costs of the regulatory alternatives are annualized over the life of the control equipment (10 years). This action is tantamount to assuming either that all by-product plants have a remaining life of at least 10 years or that the control equipment is salvageable.

The supply function for each plant is estimated as follows: the average cost of production is computed for each battery in the plant; these batteries are arranged in increasing order of their average costs of production and the output for each battery is accumulated to produce a stepped marginal cost function for the plant; plant overhead costs are averaged for all relevant plant output rates; and average total costs are computed for each output rate by summing the average costs for plant overhead and the battery. Each plant's supply function is the portion of the marginal cost function above the average total cost function. For existing plants where the average total cost exceeds marginal cost over the entire range of output, the supply function is the point on the plant's average total cost function represented by capacity output (after allowing for outages). The aggregate long-run supply function for all currently existing coke plants and batteries is obtained by horizontally summing the supply function for each plant. The 1980 industry marginal cost (supply) curves for existing furnace and foundry coke plants are presented in Figures 9-8 and 9-9, respectively.

9.2.2.1.7 Coke supply function--new facilities. The cost of coke production for new furnace and foundry batteries was estimated from the engineering cost model, assuming the new model plants described previously. These costs include the normal return on investment and allowances for

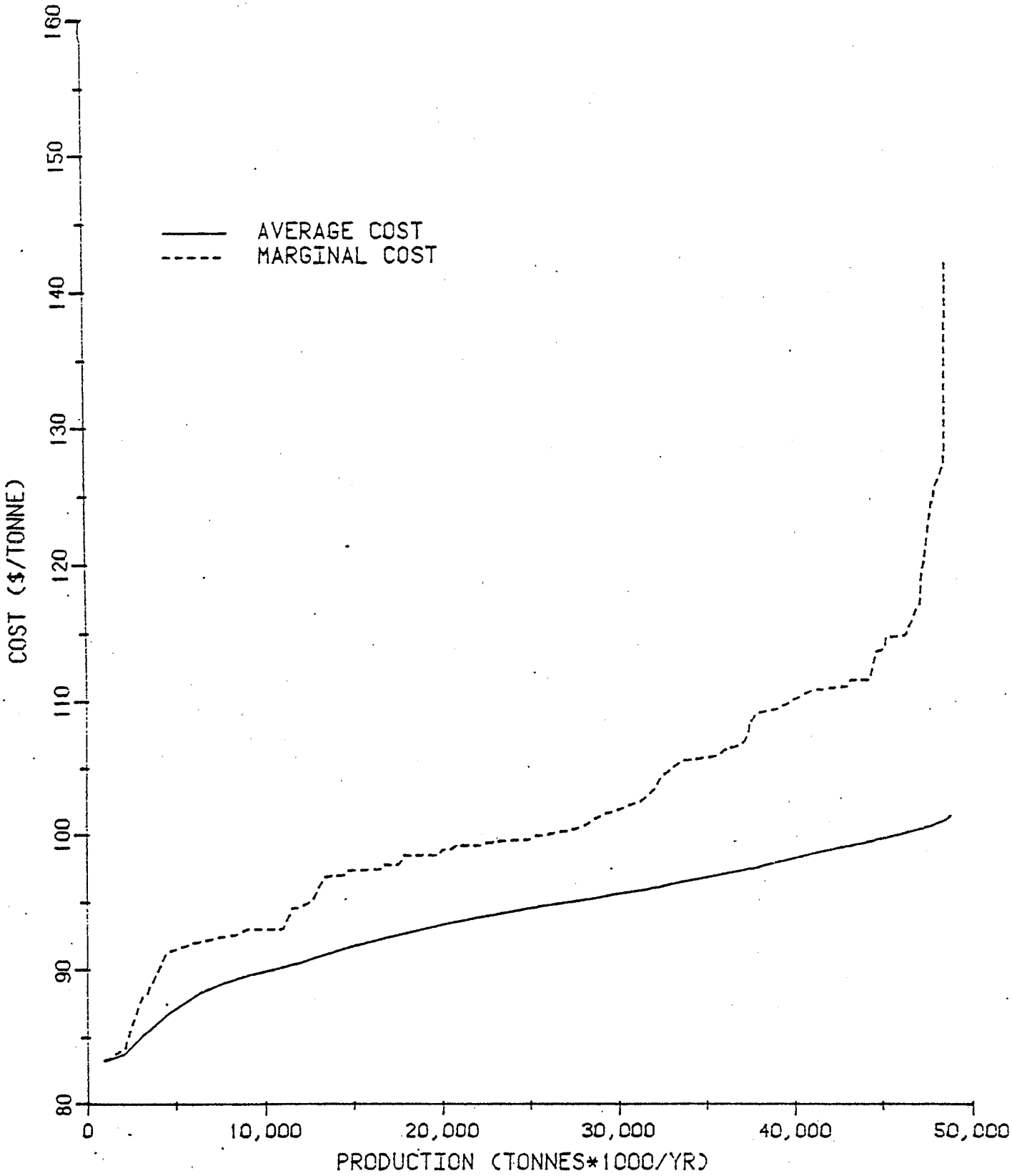

Figure 9-8. Marginal and average cost functions for furnace coke, 1980.

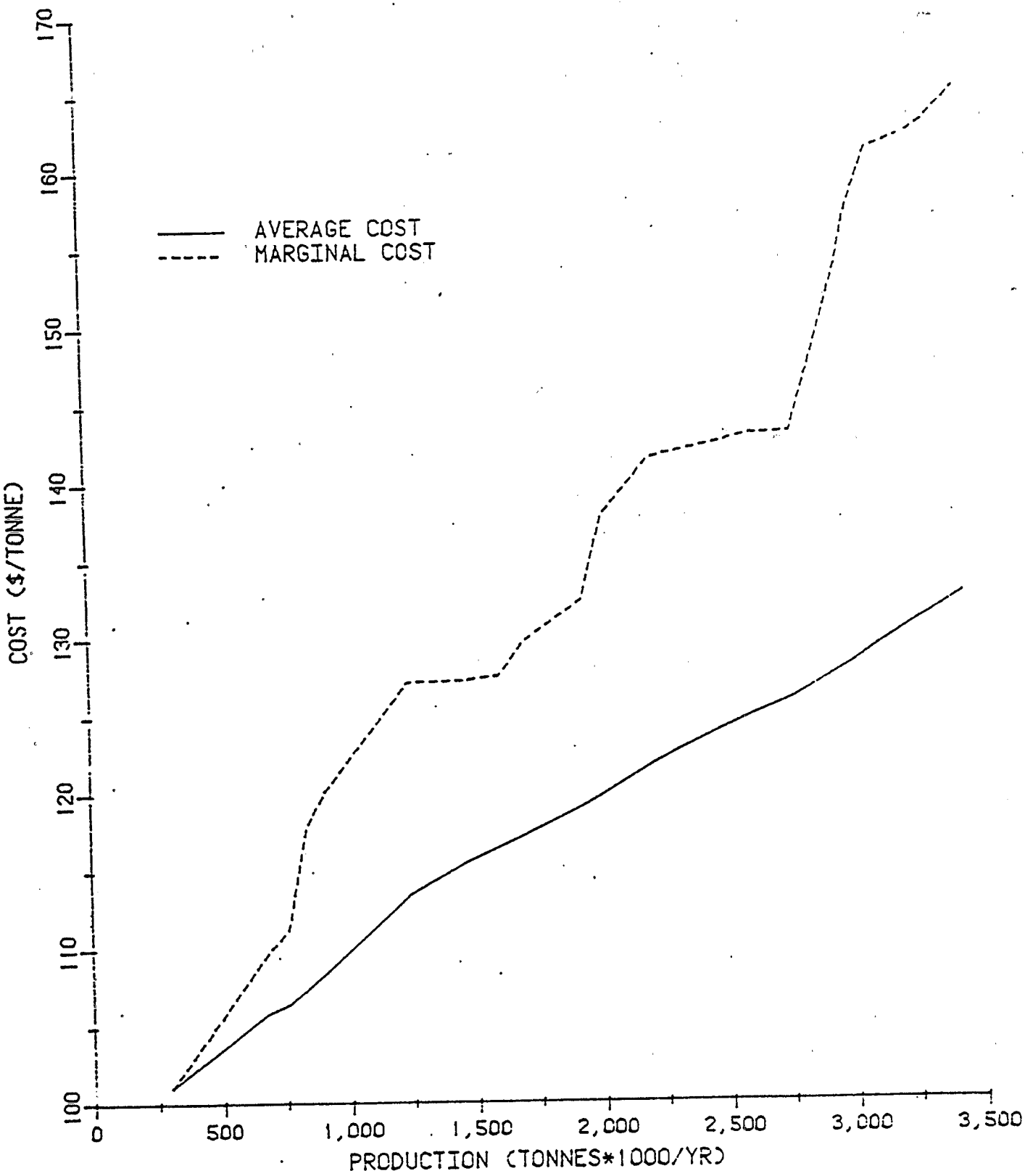

Figure 9-9. Marginal and average cost functions for foundry coke, 1980.

depreciation and corporate income taxes. When expressed on a per-unit basis, these costs are the minimum price at which it is attractive to build new facilities.

9.2.2.2 Demand Side. The demand for coke is derived from the demand for products that use coke as an input to production--primarily steel and ferrous foundry products. A demand function for furnace coke was derived by econometrically modeling the impacts of changes in furnace coke production costs on the steel industry.[54]

The econometric model of the steel industry has two sectors: steel and coke. The steel sector includes domestic steel supply, steel imports and exports, and steel consumption (steel supply plus imports minus exports). Similarly, the model of the coke sector consists of domestic coke supply, domestic coke demand, and coke imports and exports. The two sectors are linked by a derived coke demand function, which includes as variables steel production, steel price, and quantities and prices of other inputs to steel production. The domestic supply of steel is assumed equal to domestic demand for U.S. steel plus world demand for U.S. steel minus U.S. import demand.

Both linear and nonlinear specifications were used to estimate the steel-sector model. Two-stage least squares were used to estimate the different components of the steel sector. Visual inspections of the correlation matrix and a plot of the dependent variable versus the residuals indicated no multicollinearity or heteroscedasticity problems. The Durbin-Watson statistic showed no evidence of autocorrelation.

The econometric estimation of the coke sector was complicated by the small share of total domestic production that is traded in the market. The fact that very little coke is actually sold creates concern over the reported price of coke. Therefore, estimates of the implied price of coke were developed, based on the value of coke in steelmaking, and used in the analysis.[55] [56] Estimates of elasticities for coke and steel functions are presented in Table 9-19.

An attempt was made to derive a demand function for foundry coke in an analogous manner. However, the relevant coefficient estimates were not statistically significant at a reasonable level. A direct estimation of

TABLE 9-19. ESTIMATES OF ELASTICITIES OF STEEL AND COKE MARKETS

		Point estimate	Interval estimate[a]
1.	Percent change in furnace coke demand for 1 percent change in the price of furnace coke	-1.17[b,c]	(-1.06, -1.29)
2.	Percent change in foundry coke demand for 1 percent change in the price of foundry coke	-1.03[d]	--[d]
3.	Percent change in import demand for 1 percent change in the price of furnace coke	1.88	(-1.68, 5.44)
4.	Percent change in price of steel for 1 percent change in the price of furnace coke	0.14[c]	(0.139, 0.141)
5.	Percent change steel demand for 1 percent change in the price of steel	-1.86[c]	(-0.54, -3.18)
6.	Percent change in steel imports for 1 percent change in the price of steel	1.51[c]	(0.51, 2.51)

Note: Estimates are based on the empirical analysis using annual data for the years 1950-1977 with a structural econometric model of steel and coke markets.

[a]Interval estimates are based on 95 percent confidence level.

[b]Derived from the production function for steel.

[c]Significantly different from zero at 1 percent level of statistical significance.

[d]Calculation based on the theoretical relationship between input demand elasticity and input cost share in the production of foundry products. Accordingly, no interval is provided.

the demand function, based on the prices of foundry coke, foundry coke substitutes, and complementary inputs, was also attempted. Unfortunately, the precise data necessary to properly estimate the demand function was not readily available from published sources. Accordingly, the elasticity of demand for foundry coke was estimated based on the theoretical relationship between the production function for foundry products and the derived demand function for inputs to foundry production. This elasticity calculation is based on a 3-year average of the cost share of foundry coke in foundry production. This estimate is presented in Table 9-19.

9.2.2.3 Synthesis. Separate linear functions were fit to the furnace and foundry coke marginal cost values depicted in Figures 9-8 and 9-9. As illustrated in Figure 9-10, each supply function is used with the demand function for the appropriate type of coke to compute the initial equilibrium price-quantity values (P_1 and Q_1 in Figure 9-10). The supply function is reestimated for each regulatory alternative (S' in Figure 9-10), and the new equilibrium price-quantity values are predicted.

9.2.2.4 Economic Impact Variables. Table 9-20 shows the specific economic variables for which impacts are estimated. The methodology presented previously was designed to provide industry-level estimates of these impacts. The conventional demand and supply partial equilibrium model of a competitive market was chosen for this analysis because it was believed to represent the key characteristics of the coke market and many of the impacts of interest can be readily estimated from this model. In Figure 9-11, DD' represents the derived demand for coke. The line cd represents the supply of coke. The equilibrium price and quantity are P_1 and Q_1, respectively. The area $OcdQ_1$ is the total cost of coke production, OP_1dQ_1 is the total revenue, and cP_1d represents before-tax profits. The total cost of coke production ($OcdQ_1$) can be divided into costs incurred to produce coke per se ($OabQ_1$) and the costs being incurred to meet existing environmental and other regulations (acdb).

The regulatory alternatives will increase the cost of coke production by shifting the supply function to ef. Given the demand and supply functions as drawn in Figure 9-11, higher costs of production will lead to higher prices. If there were no substitutes for coke and no decrease in

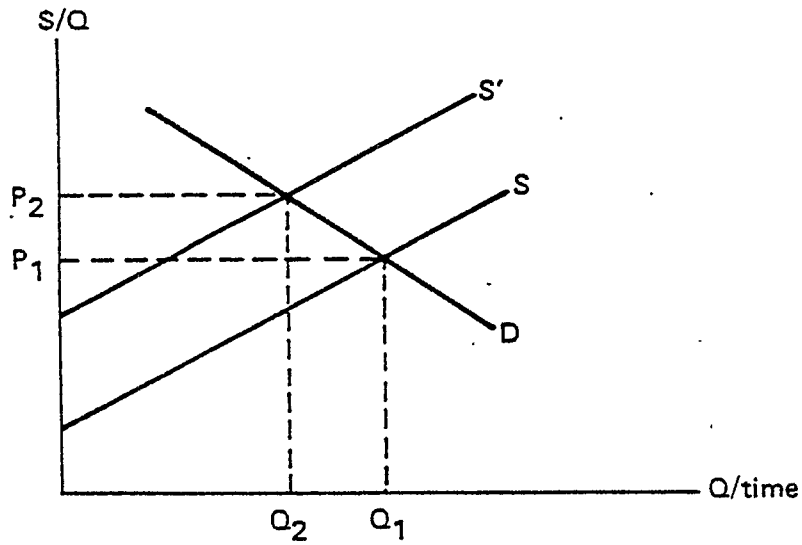

Figure 9-10. Coke supply and demand.

TABLE 9-20. ECONOMIC IMPACT VARIABLES AND AFFECTED SECTORS

Variable	Sector			
	Furnace coke	Foundry coke	Steel	Final demand
Price	X	X	X	X
Output	X	X	X	
Profits	X	X		
Costs	X	X		
Plant closures/openings	X			
Capital requirements	X	X		
Factor employment				
Labor	X	X		
Metallurgical coal	X	X		
Imports	X		X	

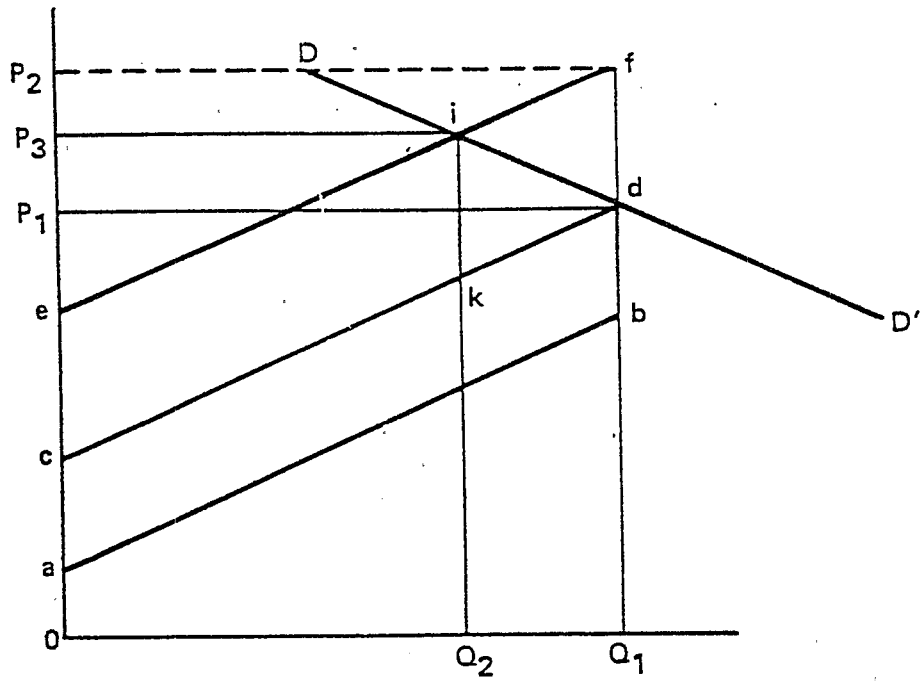

Figure 9-11. Coke demand and supply with and without regulatory alternatives.

the production of coke-using products, the rate of coke consumption would remain at Q_1 annually and the price of coke would increase to P_2. The cost of the regulatory alternative would be cefd. However, a production decrease is more likely. As shown in Figure 9-11, the price would rise to P_3 and the quantity demanded would fall to Q_2. The actual costs of the regulatory alternative are ceik, and profits before income taxes are eP_3i.

9.2.3 Furnace Coke Impacts

As described in Section 9.2.2 of this analysis, the furnace coke industry has been modeled as a competitive industry supplying coke to the steel industry. This definition implies the existence of interfirm and intrafirm shipments of coke. However, no allowance has been made for coke transportation costs, although coal transportation costs are included in the cost of coke production estimates. Coke plants and their associated steel mills are typically clustered together. As noted in Section 9.1.4.1, most coke is consumed within the region where it is produced. Hence, transportation across great distances is uncommon. Therefore, the omission of coke transport costs should not greatly influence the calculations.

Trend projections for the 1980 to 1990 period in coke and steel production and consumption were presented in Section 9.1. The baseline values for 1983, presented in Table 9-21, are based on these projections. The projected values for 1983 were assumed to reflect full compliance with applicable SIP, OSHA, water, and other air quality regulations, including recommended standards (which may or may not be imposed) for topside, charging, and door leaks (NESHAP) and quench towers (NSPS). The coke supply model was used to compute the price of furnace coke, costs, revenues, and profits, given these trend projections. Coal consumption and employment projections were made using current coal- and labor-output ratios. The supply function was reestimated assuming only existing levels of control for all emission sources. This estimation was used to determine the impacts of moving from existing to baseline control for all sources. These impacts are also presented in Table 9-21.

Table 9-22 presents the capital and operating costs that have yet to be incurred, but that must be incurred in meeting the baseline for all

TABLE 9-21. 1983 BASELINE VALUES FOR ECONOMIC IMPACT ANALYSIS--FURNACE COKE

	Baseline values[a]	Impact of moving from existing to baseline control[b]
Coke market		
Price (1979 $/Mg)	130.10	7.84
Production (10^3 Mg/yr)	39,528	-2,781
Consumption (10^3 Mg/yr)	42,603	-2,433
Imports (10^3 Mg/yr)	3,075	348
Employment (jobs)	7,088	-479
Coal consumption (10^3 Mg/yr)	47,836	-3,366
Steel market		
Price ($/Mg)	409.36	3.53
Production (10^3 Mg/yr)	116,960	-2,498
Consumption (10^3 Mg/yr)	137,438	-2,204
Imports (10^3 Mg/yr)	22,559	294
Employment (10^3 Mg/yr)	401,145	-7,708

[a]Baseline includes: OSHA (coke oven emissions); desulfurization, pushing, coal handling, coke handling, quench tower, and battery stack controls; BPT and BAT water regulations; and recommended regulations of topside, charging, and door leaks (NESHAP) and quench towers (NSPS).

[b]The effects of moving from existing (December 31, 1979) levels of control to the regulatory baseline are included in the baseline values.

TABLE 9-22. BASELINE CONTROL COSTS--FURNACE COKE (10^6 \$, 1979 \$)[a]

	Total annualized costs	Incremental capital costs[d]
Costs already incurred to meet existing and proposed regulations[b]	495[c]	1,461
Cost yet to be incurred to meet existing and proposed regulations[b]	372	967
Total cost to meet baseline	867	2,428

[a]Calculated for all batteries projected to be in existence in 1983.[49 51]

[b]Includes: OSHA; desulfurization, pushing, coal handling, coke handling, quench tower, and battery stack emission controls; BPT and BAT water regulations; and recommended regulations of topside, charging, and door leaks (NESHAP) and quench towers (NSPS).

[c]Not including capital charges (sunk costs).

[d]The capital costs of controls already in place are estimated as if the controls were put in place in the third quarter of 1979.

sources. Table 9-22 also provides an estimate of the costs that have already been incurred to meet existing and proposed regulations (the baseline) for all sources.

9.2.3.1 Price Effects. The price of furnace coke is assumed to be established in a competitive market. In the basic model of a competitive market, the interaction of supply and demand determine the equilibrium price. This price is dependent on the costs of production of the marginal producer and the value of the product to the marginal buyer. The marginal producer is the producer who is willing to supply the commodity at the market price because he is just covering all his costs at that price. The marginal buyer is just willing to pay the market price. Other buyers who value the product more still pay only the market price.

Estimates of the demand and supply functions for furnace coke are necessary to develop projections of the equilibrium price for furnace coke with and without increased control. The supply of furnace coke as shown previously would be shifted by the regulatory alternatives. The demand for furnace coke has been econometrically estimated and found to be responsive to price changes. The estimated elasticity of demand for furnace coke is -1.2. This responsiveness reflects the substitution of other fuels for coke in blast furnaces; the substitution of other inputs, primarily scrap, for pig iron in steelmaking; and the substitution of other commodities for steel throughout the economy.

Higher prices for coke will increase the cost of steel production unless there is a perfect substitution between coke and other inputs to steelmaking. In that case, the consumption of coke would decrease to zero. If substitutions for coke in steelmaking were not possible (i.e., input proportions were fixed), the steel price increase would be the percentage change in coke price times the share that coke represents in the cost of steelmaking (14.3 percent) times the base price of steel. This assumption is used to develop maximum steel price effects.

Table 9-23 presents the furnace coke and steel price impacts of the regulatory alternatives. This table also shows the impacts on prices caused by the change from existing to baseline levels of control for all

TABLE 9-23. PRICE EFFECTS OF REGULATORY ALTERNATIVES--
FURNACE COKE, 1983[a]
(1979 dollars)

	Coke ($/Mg)	Steel ($/Mg)
Price assuming existing controls	122.26	405.83
Price increase caused by moving from existing to baseline controls	7.84	3.53
Price increase caused by moving from baseline to Regulatory Alternative		
II	0.02	0.01
III	0.70	0.30

[a]Regulated sources included in the baseline are described in Table 9-21.

sources. Complete compliance with the baseline measured against current control increases the coke price by 6.4 percent. The proposed regulatory alternatives are not likely to affect coke prices.

9.2.3.2 Production and Consumption Effects. The estimated demand and supply relationships for coke are used to project the production and consumption effects of the regulatory alternatives. As shown in Table 9-24, the changes in coke production and consumption are fairly small for the two regulatory alternatives. Moving from existing to baseline levels of control reduces coke production by 6.6 percent.

Imported coke is a close substitute for domestically produced coke. Imported coke is not a perfect substitute because coke quality deteriorates during transit and contractual arrangements between buyers and sellers are not costless. However, increases in the costs of production for domestic plants will increase the incentive to import coke.

The projected increases in coke imports are reported in Table 9-24. As illustrated below, coke imports have increased significantly since 1972.

Year	Imports (10^3 Mg)
1972	168
1973	978
1974	3,211
1975	1,650
1976	1,189
1977	1,659
1978	5,191
1979	3,605

The recent increase in imports is believed to be the result of a coal strike in the United States during 1978 combined with depressed conditions in the market for steel in the countries exporting coke to the United States. Accordingly, continued importation at a high level may depend upon future market conditions for steel in other countries. In any case, the change in coke imports projected for all the regulatory alternatives is small.

9.2.3.3 Coal Consumption and Employment Effects. Any reductions in coke and steel production are expected to cause reductions in the use of the factors that produce them. The major inputs to coke production are coal and labor. Labor is also an important input in coal mining.

TABLE 9-24. PRODUCTION AND CONSUMPTION EFFECTS OF REGULATORY ALTERNATIVES--FURNACE COKE, 1983[a]

	Coke market (10^3 Mg/yr)			Steel market (10^3 Mg/yr)		
	Production	Consumption	Imports	Production	Consumption	Imports
Value assuming existing controls	42,309	45,036	2,727	119,458	139,642	22,265
Change in value caused by moving from existing to baseline controls	-2,781	-2,433	348	-2,498	-2,204	294
Change in value caused by moving from baseline to Regulatory Alternative						
II	-10	-8	1	-9	-8	1
III	-235	-205	29	-211	-186	25

[a]Regulated sources included in the baseline are described in Table 9-21.

The coal consumption and employment implications of the projected reductions in coal, coke, and steel production are shown in Table 9-25. These values were developed assuming constant coal- and labor-output ratios. The employment impacts shown do not include the estimated increases in employment caused by the regulatory alternatives. Therefore, the employment impacts represent maximum values.

9.2.3.4 Financial Effects.

The aggregate capital costs of the regulatory alternatives are summarized in Table 9-26. Capital costs have also been summed across member plants to determine the cost to each coke-producing company of meeting baseline and alternative regulations. The total capital costs by company may be used to produce ratios that express the relation between: (1) total capital cost and the average net income of the company and (2) total capital cost and the annual average net capital investment of the company. This analysis is presented to give some insight into the distribution of the financial effects across coke-producing firms.

The ratio of capital cost to net income may be used as a measure of the ability of each company to finance the capital cost. The larger the ratio, the more likely a company will be to have capital shortage problems and to have to rely upon external debt financing. The second ratio, the ratio of total capital cost to annual average net investment, is an indicator of whether the usual sources of investment capital available to the firm will be sufficient to finance the additional capital costs caused by the regulatory alternatives. The larger this ratio, the greater the possibility that investment needed to comply with the regulatory alternatives would significantly reduce investment in other areas. Thus, both ratios provide some insights regarding the degree to which firms will be able to finance the controls required to meet the regulatory alternatives without a serious impact on their financial position.

Financial analysis is necessarily restricted to companies for which financial data are publicly accessible. Therefore, financial analysis cannot be conducted for privately owned companies. These companies are usually the smallest in a given industry, and they probably experience higher per unit costs of regulation and higher costs for securing financing than do larger companies.

TABLE 9-25. COAL CONSUMPTION AND EMPLOYMENT EFFECTS OF REGULATORY ALTERNATIVES--FURNACE COKE, 1983[a]

	Coal consumption for coke (10^3 Mg/yr)	Employment (jobs)[b]		
		Coal[c] mining	Coke plant	Steel-making
Change caused by moving from existing to baseline controls	-3,365	-1,077	-478	-7,708
Change caused by moving from baseline to Regulatory Alternative				
II	-12	-4	-2	-26
III	-284	-91	-40	-651

[a]Regulated sources included in the baseline are described on Table 9-21.

[b]Employment impacts are based on input-output relationships and production impacts. Impacts on coke plant employment do not include jobs created by the relevant controls.

[c]Annual labor productivity in coal mining is estimated as 3,125 Mg/yr/job.

TABLE 9-26. INDUSTRY CAPITAL REQUIREMENTS OF REGULATORY ALTERNATIVES--FURNACE COKE, 1983

	Capital costs of regulations[a] (10^6 1979 $)
Capital costs caused by moving from existing to baseline controls[b]	1,008
Capital costs caused by moving from baseline to Regulatory Alternative	
II	22
III	137

[a]Calculated for all plants projected to be in existence in 1983.[48 50]

[b]The regulated sources included in the baseline are described in Table 9-22.

A further complication of financial analysis is that many coke-producing companies are wholly owned subsidiaries of larger, highly diversified corporations. Financial data are available for the parent corporations only. Analysis of these data will probably lead to the conclusion that the parent companies have ample resources to finance additional capital costs. However, the extent to which these corporations will make such investments, or will cease some coke operations in favor of other investment opportunities evidencing higher rates of return, cannot be determined without knowledge of the required return on investment specific to the firm and the other investment opportunities that exist for the firm.

Table 9-27 provides estimates of the capital costs of meeting the baseline regulations and of each regulatory alternative as a percentage of average annual net income for each furnace-coke-producing company. Whenever possible, average annual net income was computed for each company by averaging net income data (in constant 1979 dollars) for 1977 to 1981. In some instances, less than 5 years of data were available. In the case of companies that are subsidiaries of other companies, the net income figures used were those of the parent companies. Because of the approximate nature of this analysis, the companies are represented by alphabetic characters.

Table 9-27 indicates that the most capital-intensive regulatory costs are associated with meeting baseline regulations. Regulatory Alternatives II and III do not impose capital costs in excess of 18 percent of net income for any of the companies. The costs of the regulatory alternatives could most likely be met with internal financing.

The costs of meeting the baseline regulations simultaneously with each of the regulatory alternatives are given in Table 9-28 and are expressed as ratios of compliance capital costs to average annual net income. For 7 of the 15 analyzed firms, each regulatory alternative in combination with the baseline has associated capital costs in excess of 50 percent of net income. For 2 of these firms, G and M, associated capital costs are in excess of 100 percent of net income. These companies may experience difficulties financing control expenditures. However, the bulk of the expenditures required are pending baseline expenditures. Slowness in meeting baseline regulations may signal the intention to retire facilities. Nonetheless,

TABLE 9-27. THE RATIO OF INCREMENTAL CAPITAL COSTS TO NET INCOME--FURNACE COKE PRODUCERS, 1983

	Ratio of compliance capital costs to average annual net income by firm (%)[a]															
	A	B	C	D	E	F	G	H[c]	I	J	K	L	M	N	P	R
Costs caused by moving from existing to baseline controls[b]	6	51	12	6	46	37	127		2	86	82	86	346	6	25	63
Costs caused by moving from baseline to Regulatory Alternative																
II	1	1	1	0	1	1	3		0	2	3	1	4	0	0	1
III	4	7	9	0	8	9	15		1	11	15	8	18	2	4	8

NC = No cost to the company arises from this regulatory alternative.

[a]Average annual net income calculated from company profiles in Moody's Industrial Manual, Moody's Investor Service, New York, 1982. (Calculations were made on a constant 1979 dollar basis.)

[b]The regulated sources included in the baseline are described in Table 9-22 of the BID.

[c]This company has an average annual net income that is negative (net loss).

TABLE 9-28. THE RATIO OF CUMULATIVE CAPITAL COSTS TO NET INCOME--FURNACE COKE PRODUCERS, 1983[a]

Regulatory Alternative	Ratio of compliance capital costs to average annual net income by firm (%)[b]															
	A	B	C	D	E	F	G	H[c]	I	J	K	L	M	N	P	R
II	7	52	13	6	47	39	130		2	88	84	87	350	6	25	64
III	10	58	21	7	54	47	142		3	97	97	93	364	8	29	71

NC = No cost to the company arises from this regulatory alternative.

[a]Capital costs include the costs of moving from existing to baseline controls plus the cost of the indicated regulatory alternative. The regulated sources included in the baseline are discussed in Table 9-22 of the BID.

[b]Average annual net income calculated from company profiles in Moody's Industrial Manual, Moody's Investor Service, New York, 1982. (Calculations were made on a constant 1979 dollar basis.)

[c]This company has an average annual net income that is negative (net loss).

given that the average annual net income figures are those for the parent companies, the cost of each regulatory alternative in combination with the baseline may be prohibitive to several of the firms.

Net income does not represent the sum of cash available annually to the company. Cash flow also includes the amount written off to depreciation, depletion, and amortization. Cash flow was not used as the denominator in computing these ratios because depreciation accounting practices vary widely among companies, and consistency of the data would have suffered. However, the implication is that the ratios are somewhat overstated because, in practice, additional cash is available to the company.

Table 9-29 provides the ratio of capital costs to average annual net investment by company for the baseline and each regulatory alternative. The average annual net investment was calculated from financial records in the same manner as average annual net income. However, in many instances, only 2 years of data were available. This ratio compares the relative amounts of the investment required for regulatory compliance and normal investment by the firm. The ratio provides some indication of the degree to which investment required for regulatory compliance might crowd out normal investment.

Again, the bulk of compliance costs are associated with meeting baseline regulations. The regulatory alternatives impose capital costs as a percentage of average annual net investment between 0 and 6 percent. Cumulative capital cost to net investment ratios (baseline costs summed with costs of each regulatory alternative) are given in Table 9-30. Two of these firms have cumulative ratios in excess of 50 percent; this might be prohibitively large.

The leverage ratios presented in Table 9-14 indicate that coke-producing firms are engaged in a substantial amount of external financing. These firms may be reticent (or unable) to borrow more heavily. Furthermore, financing capital expenditures by issuing additional common stock would tend to dilute existing stockholder equity. Considering the low historical return on investment in the industry, this dilution would probably be unacceptable. An analysis of the iron and steel industry undertaken by Temple, Barker, and Sloane, Inc.,[53] addresses the question of external financing with regard to water pollution control expenditures. This

TABLE 9-29. THE RATIO OF INCREMENTAL CAPITAL COSTS TO NET INVESTMENT--FURNACE COKE PRODUCERS, 1983

	Ratio of compliance capital costs to average annual net income by firm (%)[a]															
	A	B	C	D	E	F[c]	G[c]	H	I	J	K	L[c]	M	N	P	R
Costs caused by moving from existing to baseline controls[b]	7	18	8	1	18			51	2	44	32		98	2	17	32
Costs caused by moving from baseline to Regulatory Alternative																
II	1	0	1	0	0			0	0	1	1		1	0	0	0
III	4	3	6	0	3			5	2	6	6		5	1	2	4

NC = No cost to the company arises from this regulatory alternative.

[a]Average annual net income calculated from company profiles in Moody's Industrial Manual, Moody's Investor Service, New York, 1982. (Calculations were made on a constant 1979 dollar basis.)

[b]The regulated sources included in the baseline are described in Table 9-22 of the BID.

[c]Data on annual investment are not available for this company.

TABLE 9-30. THE RATIO OF CUMULATIVE CAPITAL COSTS TO NET INVESTMENT--FURNACE COKE PRODUCERS, 1983[a]

Regulatory Alternative	Ratio of compliance capital costs to average annual net income by firm (%)[b]															
	A	B	C	D	E	F[c]	G[c]	H	I	J	K	L[c]	M	N	P	R
II	7	18	9	1	19			52	2	46	33.		99	2	18	32
III	11	20	14	1	21			56	4	50	38		103	3	19	36

NC = No cost to the company arises from this regulatory alternative.

[a]Capital costs include the costs of moving from existing to baseline controls plus cost of the indicated regulatory alternative. The regulated sources included in the baseline are described in Table 9-32 of the BID.

[b]Average annual net income calculated from company profiles in Moody's Industrial Manual, Moody's Investor Service, New York, 1982. (Calculations were made on a constant 1979 dollar basis.)

[c]Data on annual investment are not available for this company.

analysis concludes that to avoid deterioration in its financial condition, the industry is likely to reduce expenditures to modernize production facilities rather than increase its external financing.

9.2.3.5 Battery and Plant Closures. Battery closure candidates are batteries that have marginal costs of operation greater than the projected price of coke. Some batteries are closure candidates under existing regulatory controls while others become closure candidates when total compliance with baseline regulations is posited. No other batteries become closure candidates when the regulatory alternatives are added.

Under the existing state of control, nine furnace batteries are closure candidates. When compliance with all baseline regulations is posited, three additional batteries become closure candidates. None of the regulatory alternatives adds to the closure list. Hence, the total impacts under the most stringent combination of regulatory alternatives include 12 batteries as closure candidates.

The 12 batteries identified as closure candidates under baseline control are owned by six companies and are located in seven plants. Three entire plants are closed under baseline conditions; no entire companies are closed.

The number of closure candidates under any regulatory scenario is extremely sensitive to the projections of coke demand and coke imports for 1983. A 10-percent increase in projected 1983 coke production would reduce the list of closure candidates under the baseline to seven batteries in five plants owned by four companies.

The decision to close a battery is more complicated than the basic closure rule would indicate; this is particularly true for integrated iron and steel producers. Continued access to profits from continued steel production is a key factor in the closure decision for a captive battery. Before closing or idling a coke battery, managers would want to know where they would get coke on a reliable basis in order to continue making steel. The obvious sources to be investigated include other plants within the same company, other companies, and foreign suppliers. As noted in Section 9.1, some interregional and international movement of coke occurs.

Obtaining coke from offsite sources introduces two potential complications: the cost of transporting coke and the certainty of the coke supply. Obtaining coke from a nearby source might be the most profitable alternative to transporting coke. If coke must be shipped over long distances, onsite production at a cost above the projected market price might be more profitable. Three of the battery closure candidates under the baseline are located some distance from most other coke-producing facilities.

If coke must be purchased, certainty of supply is a complication. Steel producers prefer to have captive sources of coke to safeguard against supply interruptions, and they may be willing to pay a premium for this security. Producing at a cost above market price would involve such a premium. Five of the twelve closure candidates under the baseline produce at marginal costs that are less than 3 percent above the projected market price. Another two of the twelve closure candidates under baseline compliance produce coke at marginal costs that are less than 5 percent above the market price. If 5 percent is not an excessive premium to pay for certainty of supply, these batteries would not close.

Several other factors could affect a particular plant's decision to close a battery. These factors relate to the relationship of coke quality to the type of steel commodities produced, the existence of captive coal mines, and required control and other expenditures.

The developed demand model uses a single coke price, which represents an average quality of coke used to produce a weighted average mix of steel products. If high production costs for a particular battery are associated with a higher than average quality of coke, continued production might be justified. Production would also be justified if the firm produces only the most highly valued steel products.

Some coke-producing firms also own coal mines and may wish to secure continued access to profits from coal mining. Because profits in the coal sector may be subject to less effective taxation because of depletion allowances, these profits may be extremely attractive.

Under the baseline, over half of the battery closure candidates have incurred over 80 percent of projected baseline control expenditures. Three of the battery closure candidates have incurred less than 30 percent of

projected baseline expenditures. Furthermore, an integrated iron and steel producer must consider the question of necessary expenditures for its entire steel plant. If the steel facility is old or if substantial additional expenditures will be necessary to comply with regulations on other parts of the facility, then closure is more likely.

As can be concluded from the preceding discussion, closure decisions are so specific to individual situations and managers' perceptions regarding their future costs and revenues that exact projections of closures should be viewed with caution.

9.2.4 Foundry Coke Impacts

Oven coke other than furnace coke represents less than 10 percent of U.S. coke production. The majority of it is used as a fuel in the cupolas of foundries. The remainder is used for a variety of purposes, especially for heating.

Projections of various foundry coke variables in the absence of the regulatory alternatives are presented in Table 9-31. These projections are based on historical trends in foundry coke production and consumption extrapolated to 1983 and on the coke supply model. Table 9-31 also provides estimates of the impacts of meeting the baseline for all regulations measured against the existing state of control. Table 9-32 presents the cost already incurred and the costs yet to be incurred to meet current and recommended regulations. Some or all of the recommended regulations may not be promulgated.

9.2.4.1 Price and Production Effects. In developing the estimates of price and quantity impacts, a vertical shift caused by each regulatory alternative has been projected in the linear estimate of the foundry coke supply function generated under the regulatory baseline. This shift is used in conjunction with an estimated elasticity demand for foundry coke of -1.03. The projected price and quantity effects of these shifts are presented in Table 9-33.

Complete compliance with the baseline, measured against the current state of control, increases the foundry coke price by 15.4 percent. This price increase causes a 12.2-percent reduction in foundry production. The proposed regulatory alternatives do not cause any significant change in coke price or coke output.

TABLE 9-31. 1983 BASELINE VALUES FOR ECONOMIC IMPACT ANALYSIS--FOUNDRY COKE

	Baseline values[a]	Impact of moving from existing to baseline control[b]
Coke market		
Price (1979 $/Mg)	188.81	25.19
Production (10^3 Mg/yr)	2,977	-412
Consumption (10^3 Mg/yr)	2,554	-412
Employment (jobs)	496	-71
Coal Consumption (10^3 Mg/yr)	3,534	-570

[a]Baseline includes: OSHA (coke oven emissions); desulfurization, pushing, coal handling, coke handling, quench tower, and battery stack controls; BPT and BAT water regulations; and recommended regulations of topside, charging, and door leaks (NESHAP) and quench towers (NSPS).

[b]The effects of moving from existing (December 31, 1979) levels of control to the regulatory baseline are included in the baseline values.

TABLE 9-32. BASELINE CONTROL COSTS--FOUNDRY COKE[a]
(10^6 1979 $)

	Total annualized costs	Incremental capital costs
Costs already incurred to meet existing and proposed regulations[b]	45[c]	131[c]
Cost yet to be incurred to meet existing and proposed regulations[b]	64	192
Total cost to meet baseline[b]	109	323[d]

[a]Calculated for all batteries projected to be in existence in 1983.[41 44]

[b]Includes: OSHA; desulfurization, pushing, coal handling, coke handling, quench tower and battery stack emission controls; BPT and BAT water regulations; and recommended regulations of topside, charging, and door leaks (NESHAP) and quench towers (NSPS).

[c]Not including capital charges (sunk costs).

[d]The capital costs of controls already in place are estimated as if the controls were put in place in the third quarter of 1979.

TABLE 9-33. PRICE AND QUANTITY EFFECTS OF REGULATORY ALTERNATIVES FOUNDRY COKE, 1983[a]

	Coke price impact (1979 $/Mg)	Coke quantity impact (10^3 Mg/yr)
Value assuming existing controls	163.62	3,389
Change in value caused by moving from existing to baseline controls	25.19	-412
Change in value caused by moving from baseline to Regulatory Alternative		
II	0.19	-3
III	1.44	-24

[a]Regulated sources included in the baseline are described in Table 9-31.

9.2.4.2 Coal Consumption and Employment Effects. Any reductions in foundry coke production are expected to cause reductions in the use of the factors that produce the foundry coke. The major inputs to foundry coke production are coal and labor. Labor is also an important input in coal mining.

The coal consumption and employment implications of the projected reductions in coke production are shown in Table 9-34. These values were developed assuming constant coal- and labor-output ratios. The employment impacts shown do not include any employment increases caused by the regulatory alternatives. Consequently, the employment impacts represent maximum values.

9.2.4.3 Financial Effects. The aggregate capital costs of the regulatory alternatives are summarized in Table 9-35. The capital requirements to meet Regulatory Alternatives II and III for the foundry coke industry are $3 million and $19 million, respectively. Capital costs have also been summed across member plants to determine the cost to each company of meeting baseline and alternative regulations. These company capital costs, along with firm-specific financial data, are used to produce the same two financial ratios as described above for furnace coke: (1) total capital cost to net income and (2) total capital cost to net capital investment. Financial data are not available for the foundry coke producers that are privately held companies. Therefore, ratios for these companies are not included in the analysis.

Table 9-36 provides ratios of capital costs to net income for each foundry coke producer. The costs of meeting the baseline regulations are substantial. This is not unexpected since foundry coke production plants operate at a significantly lower production rate for the same level of investment as compared with furnace coke production rates. This is due to the longer coking time for foundry coke. Furthermore, in looking at the available data on the age of the batteries used in the production processes within each plant, there appears to be a correlation between the age of the battery used and the level of compliance costs facing the firm. The data suggest that the foundry coke producing plants which are facing the highest pending compliance costs are operating with batteries which were installed

TABLE 9-34. COAL CONSUMPTION AND EMPLOYMENT EFFECTS OF REGULATORY ALTERNATIVES--FOUNDRY COKE, 1983[a]

	Coal consumption for coke (10^3 Mg/yr)	Employment (jobs)[b]	
		Coal mining[c]	Coke plant
Change caused by moving from existing to baseline controls	-570	-182	-71
Change caused by moving from baseline to Regulatory Alternative			
II	-4	-1	-1
III	-33	-10	-4

[a]Regulated sources included in the baseline are described in Table 9-31.

[b]Employment impacts are based on input-output relationships and production impacts. Impacts on coke plant employment do not include jobs created by the relevant controls.

[c]Annual labor productivity in coal mining is estimated as 3,125 Mg per job.

TABLE 9-35. INDUSTRY CAPITAL REQUIREMENTS OF REGULATORY ALTERNATIVES--FOUNDRY COKE, 1983

	Capital costs of regulations[a] (10^6 1979 $)
Capital costs caused by moving from existing to baseline controls[b]	149
Capital costs caused by moving from baseline to Regulatory Alternative	
II	3
III	14

[a]Calculated for all plants projected to be in existence in 1983.[48 50]

[b]The regulated sources included in the baseline are described in Table 9-31.

TABLE 9-36. THE RATIO OF INCREMENTAL CAPITAL COSTS TO NET INCOME--FOUNDRY COKE PRODUCERS, 1983

	Ratio of compliance costs to average annual net income by firm (%)[a]					
	AA	BB	CC	DD	EE	FF
Costs caused by moving from existing to baseline controls[b]	154	395	128	63	19	24
Costs caused by moving from baseline to Regulatory Alternative						
II	2	3	9	1	0	0
III	19	3	57	8	0	0

NC = No cost to the company arises from this regulatory alternative.

[a]Average annual net investment calculated from company profiles in Moody's Industrial Manual, Moody's Investor Service, New York, 1982. (Calculations were made on a constant 1979 dollar basis.)

[b]The regulated sources included in the baseline are described in Table 9-32 of the BID.

between 1919 and 1946. Conversely, the foundry coke producers which are facing the lowest pending compliance costs are operating, for the most part, with batteries installed between 1950 and 1979.

Capital costs do not exceed 15 percent of the average annual net income for either Regulatory Alternative II or III for four of the six analyzed companies. These costs could probably be met by internal financing. Regulatory Alternative III imposes costs in excess of 15 percent of net income for two of the six foundry coke producers. The cumulative costs of moving through the baseline to each alternative level of control are given in Table 9-37. These costs are substantial (in excess of 100 percent) for several of the firms, and they may be prohibitive.

Ratios of compliance costs to average annual net investment for the foundry coke producers are provided in Table 9-38. The costs of moving from baseline to a regulatory alternative are never more than 17 percent of the average annual net investment. However, as shown in Table 9-39, the costs of these alternatives and meeting the baseline regulations are in excess of 100 percent of average annual net investment for one firm and in excess of 50 percent for another.

Tables 9-35 through 9-39 identified the existence of firms that may experience prohibitive cumulative capital costs as a result of regulatory actions. Firms would use internal financing, additional equity financing, and/or debt financing to make these capital expenditures. Since many of the foundry plants are owned by private corporations, data are insufficient to assess the eventual sources of capital that these firms will use. Therefore, only qualitative statements can be made concerning the impacts of financing regulatory investments. Any internal financing would reduce return on equity by directly reducing dividends or by reducing productive capital expenditures. Debt financing may reduce the return on equity by increasing the cost of debt financing. Finally, financing regulatory capital requirements using new common stock issues will have a tendency to dilute present owner's equity. This dilution could be substantial.

9.2.4.4 Battery and Plant Closures. The decision rule used to indicate closure candidates among furnace batteries is also used for foundry batteries. Any foundry battery for which the marginal cost of operation is

TABLE 9-37. THE RATIO OF CUMULATIVE CAPITAL COSTS TO NET INCOME--FOUNDRY COKE PRODUCERS, 1983[a]

Regulatory Alternative	Ratio of compliance costs to average annual net income by firm (%)[b]					
	AA	BB	CC	DD	EE	FF
II	156	398	137	64	20	24
III	173	398	185	71	20	24

NC = No cost to the company arises from this regulatory alternative.

[a]Capital costs include the costs of moving from existing to baseline controls plus the cost of the indicated regulatory alternative. The regulated sources included in the baseline are described in Table 9-32 of the BID.

[b]Average annual net investment calculated from company profiles in Moody's Industrial Manual, Moody's Investor Service, New York, 1982. (Calculations were made on a constant 1979 dollar basis.)

TABLE 9-38. THE RATIO OF INCREMENTAL CAPITAL COSTS TO NET INVESTMENT--FOUNDRY COKE PRODUCERS, 1983

	Ratio of compliance costs to average annual net investment by firm (%)[a]					
	AA	BB	CC[b]	DD	EE	FF
Cost caused by moving from existing to baseline controls[c]	134	54		32	9	10
Costs caused by moving from baseline to Regulatory Alternative						
II	2	0		0	0	0
III	17	0		4	0	0

NC = No cost to the company arises from this regulatory alternative.

[a]Average annual net investment calculated from company profiles in Moody's Industrial Manual, Moody's Investor Service, New York, 1982. (Calculations were made on a constant 1979 dollar basis.)

[b]Data on annual investment are not available for this company.

[c]The regulated sources included in the baseline are described in Table 9-32 of the BID.

TABLE 9-39. THE RATIO OF CUMULATIVE CAPITAL COSTS TO NET INVESTMENT--FOUNDRY COKE PRODUCERS, 1983[a]

Regulatory Alternative	Ratio of compliance costs to average annual net investment by firm (%)[b]					
	AA	BB	CC[c]	DD	EE	FF
II	136	55		32	10	10
III	151	55		36	10	10

NC = No cost to the company arises from this regulatory alternative.

[a]Capital costs include the costs of moving from existing to baseline controls plus the cost of the indicated regulatory alternative. The regulated sources included in the baseline are described in Table 9-32 of the BID.

[b]Average annual net investment calculated from company profiles in Moody's Industrial Manual, Moody's Investor Service, New York, 1982. (Calculations were made on a constant 1979 dollar basis.)

[c]Data on annual investment are not available for this company.

greater than the projected price of foundry coke is a candidate for closure. According to this criterion and assuming baseline control, eight batteries that are projected to be in existence in 1983 are closure candidates. These batteries are located in five plants owned by five companies. Three entire plants are closed under baseline conditions. All eight batteries are smaller than the average foundry battery.

Three of the eight batteries and one of the three plants are closure candidates under the existing state of control. Complete compliance with current and proposed regulations is responsible for five potential battery closures, which result in two potential plant closures. Compliance with even the most stringent of the regulatory alternatives should not add to the list of closure candidates.

The number of closure candidates under any regulatory scenario is extremely sensitive to projected foundry coke production in 1983. A 12-percent increase in projected production would reduce the list of closure candidates under the baseline to four batteries and one plant.

If the battery closure candidates provide coke to nearby foundries and if there are no other sources of coke in the immediate vicinity, these batteries may continue to operate. The cost of transporting coke from distant sources may be sufficiently high to outweigh potential cost and price differences between foundry coke producers.

9.3 POTENTIAL SOCIOECONOMIC AND INFLATIONARY IMPACTS

9.3.1 Compliance Costs

The estimated total annualized costs to coke producers for compliance with the regulatory alternatives are shown in Table 9-40. Furnace and foundry coke costs are shown separately and in total. Costs for furnace and foundry producers are differentiated because of differences in coke prices and control costs per unit of output. The costs are for all plants projected to be in existence but not necessarily operating in 1983 are calculated.

In 1983, Regulatory Alternative II would result in negative compliance costs for furnace coke producers and positive compliance costs ($0.4 million per year) for foundry producers. For furnace and foundry coke producers combined, Regulatory Alternative III would result in compliance

TABLE 9-40. COMPLIANCE COSTS OF REGULATORY ALTERNATIVES UNDER SCENARIO A, 1983[a]

	Compliance cost[b] (10^6 \$/yr, 1979 \$)			Ratio of average cost of compliance to the price of coke[c] (%)	
	Furnace coke	Foundry coke	Total	Furnace coke	Foundry coke
Costs caused by moving from existing to baseline controls	372.0	64.0	436.0	7.23	11.39
Costs caused by moving from baseline to Regulatory Alternative					
II	-1.4	0.4	-1.0	-0.03	0.07
III	36.9	4.6	41.5	0.72	0.82

[a]Regulated sources included in the baseline are described in Table 9-31.

[b]Calculated for all plants projected to be in existence in 1983.[48 50]

[c]Assuming baseline price and production levels.

costs (in 1979 dollars) of $41.5 million per year. It is expected that 1983 will be the year of maximum impact. Thus, annual compliance costs do not exceed the critical level, $100 million, indicated in Executive Order 12291.

Estimates of the costs of the regulatory alternatives that exclude closure candidate expenditures were also computed. Without closure candidates, Regulatory Alternatives II and III would still result in negative compliance costs for both furnace and foundry producers.

The ratios of the average costs of compliance per unit of coke production to the prices of furnace coke and foundry coke under the regulatory baseline are shown in the right-hand portion of Table 9-40. These ratios are negative under both the regulatory alternatives.

9.3.2 Prices and Consumer Costs

The price changes projected in Section 9.2 are reproduced in Table 9-41. Coke price changes are based on the assumption that quantity adjustments indicated by estimated demand and supply functions will occur. Some part of the expected changes in the price of steel and ferrous foundry products will be passed forward by producers who use steel and ferrous products and some will be absorbed by these producers. The degree to which those changes are passed forward as opposed to being absorbed will depend on the demand and supply conditions of the affected markets.

Projections of the impacts on consumer prices of changes in the price of steel and ferrous foundry products were made using input-output analysis. These projections are developed under the assumption that purchasers of these products will pass forward the entire projected price increases to final consumers. Hence, this projection represents a worst case outcome for consumer prices. As shown in Table 9-41, the effects on consumer prices are nominal for both regulatory alternatives.

9.3.3 Balance of Trade

Projecting recent trends in coke imports implies continued increases in coke imports. Imposition of the regulatory alternatives is expected to slightly reinforce this trend. Some increase in steel imports is possible also. However, since steel price increases caused by coke price increases

TABLE 9-41. COKE, STEEL, FERROUS FOUNDRY, AND CONSUMER PRODUCTS PRICE EFFECTS OF REGULATORY ALTERNATIVES UNDER SCENARIO A, 1983[a]

	Furnace coke ($/Mg, 1979 $)	Foundry coke ($/Mg, 1979 $)	Steel ($/Mg, 1979 $)	Foundry products (%)	Increase in consumer price level (%)
Increase caused by moving from existing to baseline controls	7.84	25.19	3.53	0.40	.00075
Increase caused by moving from baseline to Regulatory Alternative					
II	0.02	0.19	0.01	0.01	0.00001
III	0.70	1.44	0.30	0.02	0.00020

[a]Regulated sources included in the baseline are described in Table 9-31.

are projected to be quite small, any increase in imports caused by the regulatory alternatives should be minor. Moreover, trade regulations covering steel imports may mitigate such increases.

In the aggregate it appears unlikely that these regulatory alternatives would significantly affect the U.S. balance of trade position, given the small share of international trade represented by coke imports. However, compliance with the baseline for all control sources in the coke plant is estimated to increase coke imports by at least 10 percent.

9.3.4 Community Impacts

Furnace and foundry coke and steel production facilities are in Pennsylvania, Indiana, Ohio, Maryland, New York, Colorado, California, Michigan, Illinois, Alabama, Utah, Kentucky, Tennessee, Missouri, Wisconsin, and West Virginia. Closure of coke facilities could have impacts on communities in these States. The regulatory alternatives are not projected to result in closures. Potential production decreases should not be sufficient to generate significant community impacts. However, further compliance with existing and proposed regulations could result in additional battery and plant closures and the resulting community impacts.

9.3.5 Small Business Impacts

The Regulatory Flexibility Act (RFA) requires consideration of the potential impacts of proposed regulations on small "entities." For the NESHAP for coke oven by-product plants, small entities can be defined as small furnace and foundry coke firms. The Environmental Protection Agency Office of Planning and Evaluation recently drafted a set of guidelines for RFA compliance. This section addresses two of the draft guideline requirements that relate to the economic aspects of the RFA.

- Identifying small firms impacted by the NESHAP, and
- Estimating the economic impact of the NESHAP on these small firms.

The guidelines for conducting a regulatory flexibility analysis define a small business as "any business concern which is independently owned and operated and not dominant in its field as defined by the Small Business Administration Regulations under Section 3 of the Small Business Act." The Small Business Administration (SBA) defines small firms in terms of

employment. Firms owning coke ovens are included in SIC 3312, which also includes blast furnaces, steel works, and rolling mills. The SBA has determined that any firm that is in SIC 3312 and employs less than 1,000 workers will be considered small under the Small Business Act.

Table 9-42 shows employment data for all U.S. firms that operate by-product coke ovens. Names of the companies are not given because closure predictions will be made for plants owned by a few of the firms. Four firms in the list--23, 28, 29, and 30--can be designated as small based on SBA definitions. Employment information could not be found for firms 31 and 32. Therefore, they will be treated as "small" firms for the remainder of the analysis. Because the standard being proposed is a NESHAP and all existing and new plants will be expected by law to comply, all plants of the small firms not currently in compliance could be adversely impacted.

After the affected small firms are identified, the draft guidelines for the RFA require an estimate of the degree of economic impact. The first estimation method recommended by the guidelines is to obtain the percent increase in the average total cost of producing coke as a result of the proposed standard. None of the small firms identified was found to have an average cost increase that was greater than 5 percent. Present RFA guidelines state that cost increases greater than 5 percent are considered to be significant. None of these cost increases exceed the 5-percent criterion.

The second method that the RFA draft guidelines recommended for estimating economic impacts requires information on average annual capital spending of firms. The goal is to determine if the capital requirements of regulations will cause capital availability problems for small firms. Ironically, small, privately owned firms do not report their annual investment. Therefore, it is usually impossible to assess small firm capital availability. No financial data could be found for the small coke-producing firms previously identified.

The economic impact analysis in Section 9.2 included a closure analysis, which identified plant closure candidates that resulted from meeting existing regulations, i.e., OSHA coke oven emission standards, SIPs, water standards, and other air standards. These plants are called

TABLE 9-42. EMPLOYMENT DATA FOR U.S. FIRMS OPERATING COKE OVENS

Company	Employment[a]
1	54,822
2	97,700
3	7,082
4	8,900
5	239,475
6	37,341
7	13,179
8	68,000
9	12,665
10	43,000
11	38,755
12	42,690
13	171,654
14	13,990
15	4,350
16	49,014
17	38,755
18	25,200
19	22,087
20	5,862
21	3,200
22	1,400
23	175
24	22,087
25	3,700
26	10,000
27	5,862
28	183
29	100
30	150
31	Not available
32	Not available

[a]Employment data were obtained from company profiles in Moody's Industrial Manual[42] and telephone conversations with company representatives.

baseline closure candidates. Furthermore, closure candidates were also estimated as a result of implementing the proposed NESHAP. The results of the closure analysis revealed that the proposed NESHAP will have no impact on the plants.

9.3.6 Energy

The regulatory alternatives do not have any significant direct energy impacts. Although some indirect impacts are possible, they are likely to be minor in nature.

Indirect impacts could include the substitution of fossil fuels for coke in blast furnaces, further reducing the coke rate. Some reduction is projected to occur in any case, but technological limits govern the degree to which the coke rate can be reduced. Furthermore, projected coke price increases are minor when compared to recent and projected fossil fuel price increases. Of course, if imports increase, fuel will be needed to transport them. Furthermore, if imports replace domestic coke production, excess coke oven gas, some of which is currently used in other parts of the steel plant, may be replaced by other fuels. But if steel production decreases, there will be some reduction in fuel consumption.

9.4 REFERENCES

1. Standard Industrial Classification Manual, 1972. Executive Office of the President, Office of Management and Budget. Washington, DC. U.S. Government Printing Office. 1972. p. 145.

2. 1980 Annual Survey of Manufactures. Statistics for Industry Groups and Industries (Including Supplemental Labor Costs). Bureau of the Census, U.S. Department of Commerce. Washington, DC. February 1982.

3. Coke and Coal Chemicals in 1980. Office of Coal, Nuclear, Electric and Alternate Fuels. Energy Information Administration, U.S. Department of Energy. Washington, DC. November 1981. p. 4.

4. Energy Data Reports: Coke and Coal Chemicals in 1979. Office of Coal and Electric Power Statistics, Energy Information Administration, U.S. Department of Energy. Washington, DC. October 31, 1980. p. 33-37.

5. Statistical Abstract of the United States: 1978. 99th Edition. Bureau of the Census, U.S. Department of Commerce. Washington, DC. 1978. p. 441.

6. Minerals Yearbook. Bureau of Mines, U.S. Department of the Interior, U.S. Government Printing Office. Washington, DC. 1950-1978. (Table and page numbers vary because of reclassifications).

7. Reference 3. p. 4.

8. Statistical Abstracts of the United States: 1980. 101st Edition. Bureau of the Census, U.S. Department of Commerce. Washington, DC. 1980. p. 437.

9. Reference 5. p. 874.

10. Historical Statistics of the United States: Colonial Times to 1970. Bureau of the Census, U.S. Government Printing Office, U.S. Department of Commerce. Washington, DC. 1975. p. 904-905.

11. Reference 4, p. 8.

12. 1979 Annual Survey of Manufactures. Value of Product Shipments. Bureau of the Census, U.S. Department of Commerce. Washington, DC. October 1981. p. 19.

13. Reference 2, p. 16, 19.

14. Energy Data Reports: Coke and Coal Chemicals in 1978. Office of Energy Data Operation, Energy Information Administration, U.S. Department of Energy. Washington, DC. 1980. p. 3-5.

15. 1972 Census of Manufactures. Bureau of the Census, U.S. Department of Commerce, U.S. Government Printing Office. Washington, DC. 1976.

16. 1977 Census of Manufactures. Bureau of the Census, U.S. Department of Commerce, U.S. Government Printing Office. Washington, DC. 1979. p. 2.

17. 1978 Annual Survey of Manufactures. Statistics for Industry Groups and Industries (including supplemental labor costs). Bureau of the Census, U.S. Department of Commerce. Washington, DC. January 1981. p. 16.

18. Minerals Yearbook, 1980. Volume I--Metals and Minerals. Bureau of Mines, U.S. Department of the Interior, U.S. Government Printing Office. Washington, DC. 1981. p. 437.

19. Reference 3, p. 3.

20. Analysis of the U.S. Metallurgical Coke Industry. Industrial Economics Research Institute. Fordham University. October 1979. p. 41.

21. Reference 20. p. 40.

22. Kerrigan, Thomas J. Influences upon the Future International Demand and Supply for Coke. Ph.D. dissertation. Fordham University. New York. 1977. p. 14, 114.

23. Reference 4. p. 1.

24. Reference 4. p. 13.

25. Reference 4. p. 3-5.

26. Reference 4. p. 3-5.

27. Standard Support and Environmental Impact Statement: Standards of Performance for Coke Oven Batteries. Emissions Standards and Engineering Division, Environmental Protection Agency. May 1976. p. 3-7.

28. The Politics of Coke. 33 Metal Producing. March 1980. p. 49-51.

29. Reference 4. p. 20.

30. Reference 3, p. 33-35.

31. Reference 20. p. i.

32. Reference 20. p. ii.

33. The Outlook for Metallurgical Coal and Coke. Institutional Report. Merrill Lynch, Pierce, Fenner, and Smith, Inc. 1980. p. 1.

34. Reference 33. p. 5.

35. Technical Approach for a Coke Production Cost Model. PEDCo Environmental, Inc. 1979. p. 39-50.

36. Energy Data Reports: Coke Producers in the United States in 1978. Office of Energy Data and Interpretation, Energy Information Administration, U.S. Department of Energy. Washington, DC. September 4, 1979.

37. Energy Data Reports: Distribution of Oven and Beehive Coke and Breeze. Office of Energy Data and Interpretation, Energy Information Administration, U.S. Department of Energy. Washington, DC. April 10, 1979. p. 7-8.

38. Moody's Industrial Manual, Volumes 1 and 2. Moody's Investors Service, Inc. New York. 1981.

39. Annual Statistical Report American Iron and Steel Institute. Washington, DC. 1981. p. 21.

40. DeCarlo, J. A., and M. M. Otero. Coke Plants in the United States on December 31, 1959. Bureau of Mines, U.S. Department of the Interior. Washington, DC. 1960. p. 4-10.

41. Staff Report on the United States Steel Industry and its International Rivals: Trends and Factors Determining International Competitiveness. Bureau of Economics, Federal Trade Commission, U.S. Government Printing Office. Washington, DC. November 1977. p. 53.

42. Moody's Industrial Manual. Moody's Investors Service, Inc. New York. 1979.

43. Reference 33. p. 3.

44. An Economic Analysis of Proposed Effluent Limitations Guidelines, New Source Performance Standards, and Pretreatment Standards for the Iron and Steel Manufacturing Point Source Category. Exhibit 6. Temple, Barker, and Sloane, Inc., Lexington, Massachusetts. December 1980.

45. Reference 44. p. VI-4.

46. Survey of Current Business, Bureau of Economic Analysis, U.S. Department of Commerce. Washington, D.C. August 1980. p. 5-7.

47. Survey of Current Business, Bureau of Economic Analysis, U.S. Department of Commerce. Washington, D.C. April 1983, p. 5-6.

48. Reference 20, p. 63-111.

49. Reference 35, p. 1-69.

50. Letter from Young, E. F., American Iron and Steel Institute, to Pratopos, J., U.S. Environmental Protection Agency. May 16, 1980.

51. Reference 35, p. 85.

52. Economic Impact of NSPS Regulations on Coke Oven Battery Stacks. Research Triangle Institute. Research Triangle Park, NC. May 1980. p. 8-45, 8-47.

53. Letter from Kemner, William F., PEDCo Environmental, Inc., to Bingham, Tayler, Research Triangle Institute. March 31, 1980.

54. An Econometric Model of the U.S. Steel Industry. Research Triangle Institute. Research Triangle Park, NC. March 1981.

55. Ramachandran, V. The Economics of Farm Tractorization in India. Ph.D. dissertation. North Carolina State University. Raleigh, NC. 1979.

56. Heckman, James J. Shadow Price, Market Wages, and Labor Supply. Econometrica. 42. p. 679-694.

57. An Economic Analysis of Proposed Effluent Limitations Guidelines, New Source Performance Standards, and Pretreatment Standards for the Iron and Steel Manufacturing Point Source Category. Temple, Barker, and Sloane, Inc., Lexington, MA, December 1980. p. VI-4.

APPENDIX A

EVOLUTION OF THE PROPOSED STANDARDS

APPENDIX A - EVOLUTION OF THE PROPOSED STANDARDS

The study to develop national emission standards for benzene emissions from coke by-product recovery plants was initiated in October 1978 under U.S. Environmental Protection Agency Contract Number 68-02-3056. Research Triangle Institute was designated as the lead contractor under the direction of Mr. L. L. Beck of the EPA Office of Air Quality Planning and Standards, Industrial Studies Branch.

During the course of this study, process and emissions data were obtained through a source sampling survey followed by an emission testing program and a Section 114 questionnaire entitled, "Current and Planned Emission Controls for Coke By-Product Recovery Plants." The source sampling survey and the emission testing program were conducted at approximately 7 plants. Analysis of the liquid samples collected during the source sampling survey was performed by TRW, Inc. This information was supplemented by other plant tours, meetings, and telephone contacts, in addition to data obtained from a literature search and through the Agency.

Chapters 3 through 6 of the draft Background Information Document (BID), which describe the industry, emission control techniques, reconstruction and modification considerations, model plants, and regulatory alternatives, were completed in February 1981 and mailed to industry for review and comment. The draft economic analysis was completed in August 1981. Industry comments on the draft BID were analyzed and incorporated into a revised version that was submitted to the EPA Working Group in October 1981 for internal review of the project. Working Group comments were considered and incorporated into the draft BID, preamble, and regulation, to complete the package that

was distributed to the National Air Pollution Control Techniques Advisory Committee in November 1981. Similar packages were sent to industry and environmental groups for additional comment.

Prior to and during the data-gathering process, discussions were held with individual steel companies and with representatives from the American Iron and Steel Institute. Other meetings were held to review the project with the National Air Pollution Control Techniques Advisory Committee (NAPCTAC) in December 1981. The NAPCTAC is composed of 16 people from industry, State and local air pollution control agencies, environmental groups, and others with expertise in air pollution control. This meeting was open to the public and was attended by representatives of industry and environmental groups.

During the NAPCTAC meeting, concern was expressed by industry representatives that the gas blanketing emission control system recommended by EPA as the basis of the proposed standard posed safety, operation, and maintenance problems not fully addressed in the draft BID. Industry representatives also commented that estimated costs for the recommended system were understated. However, industry officials could supply no additional technical or cost information at that time.

Following the NAPCTAC meeting, EPA personnel and their representatives gathered additional technical and cost data relating to the gas blanketing systems and other control techniques that could be applied to emission sources at coke by-product recovery plants. Visits were made to four additional by-product plants to further evaluate the design of demonstrated systems and to discuss the operation, maintenance, and safety questions raised by industry representatives at the NAPCTAC meeting. These plants included Bethlehem Steel Corporation, Sparrows Point, Maryland; Republic Steel Corporation, Cleveland, Ohio; Armco Steel Corporation, Houston, Texas; and U.S. Steel Corporation, Fairless Hills, Pennsylvania.

Additional data concerning the design, operation, and cost of gas blanketing systems were also obtained through Section 114 questionnaires sent to these and other plants operating the proposed control system.

Information regarding fugitive emissions of benzene and VOC from leaking equipment components was also collected through Section 114 questionnaires sent to seven other by-product plants and through data collected for other benzene-related regulatory projects. The revised BID was transmitted for further internal review by the EPA Steering Committee during July 1982.

This draft of the BID reflects the additional information gathered in response to the issues raised at the 1981 NAPCTAC meeting. Technical revisions to the proposed gas blanketing system design are included in this draft of the BID, as are revised costs and energy, environmental, and economic impacts. This draft of the BID, preamble, and regulation also reflects comments received from industry personnel, the EPA Office of General Counsel, and the EPA Steering Committee. Other events that have occurred in the development of background information for the proposed standard are presented in Table A-1.

TABLE A-1. EVOLUTION OF THE PROPOSED STANDARDS

Date	Event
June 8, 1977	Benzene listed as a hazardous air pollutant (42 Fed. Reg. 29332).
October 12, 1978	Work begun by Research Triangle Institute.
March 8, 1979	Finalization of quality assurance techniques and sample procedures for analysis of samples.
March 16, 1979	Approval of test plan for source sampling surveys of representative coke by-product recovery plants.
April 10-11, 1979	Plant visit to Republic Steel Corporation coke by-product recovery plant at Gadsden, Alabama, to obtain samples.
April 18-20, 1979	Plant visit to Bethlehem Steel Corporation coke by-product recovery plant at Burns Harbor, Indiana, to survey and obtain samples.
April 24, 1979	Plant visit to Republic Steel Corporation coke by-product recovery plant at Cleveland, Ohio, to survey and obtain samples.
April 26, 1979	Plant visit to National Steel Corporation coke by-product recovery plant at Weirton, West Virginia, to survey and obtain samples.
April 28, 1979	Plant visit to Wheeling-Pittsburgh Steel Corporation coke by-product recovery plant at Monessen, Pennsylvania, to survey and obtain samples.
April 30 - May 1, 1979	Plant visit to U.S. Steel Corporation coke by-product recovery plant at Clairton, Pennsylvania, to survey and obtain samples.
May 3, 1979	Plant visit to U.S. Steel Corporation coke by-product recovery plant at Bethlehem, Pennsylvania, to survey and obtain samples.
June 6, 1979	Section 114 letter requesting response to attached questionnaire, "Current and Planned Emission Controls for Coke By-Product Recovery Plants," sent to U.S. Steel Corporation plants at Clairton, Pennsylvania, and Fairfield, Alabama.
July 10, 1979	Section 114 letter requesting response to attached questionnaire, "Current and Planned Emission Controls for Coke By-Product Recovery Plants," sent to Jones & Laughlin Steel Corporation plant at Aliquippa, Pennsylvania; Bethlehem Steel Corporation plant at Sparrows Point, Maryland; Kaiser

(continued)

TABLE A-1. (continued)

Date	Event
	Steel Corporation plant at Fontana, California; Inland Steel Company plant at East Chicago, Indiana; Republic Steel Corporation plant at Youngstown, Ohio; and Chattanooga Coke and Chemical Company plant at Chattanooga, Tenneseee.
October 15, 1979	Analyses of samples completed by TRW, Inc.
April 28-19, 1980	Plant visit to Wheeling-Pittsburgh Steel Corporation coke by-product recovery plant at Monessen, Pennsylvania, to survey and obtain samples.
May 12-15, 1980	Pretest survey at Bethlehem Steel Corporation coke by-product recovery plant at Bethlehem, Pennsylvania.
May 20-21, 1980	Pretest survey at U.S. Steel Corporation coke by-product recovery plant at Clairton, Pennsylvania.
May 22-23, 1980	Pretest survey at Wheeling-Pittsburgh Steel Corporation coke by-product recovery plant at Monessen, Pennsylvania.
May 28, 1980	Pretest survey at Bethlehem Steel Corporation coke by-product recovery plant at Burns Harbor, Indiana.
June 3, 1980	Pretest survey at Republic Steel Corporation coke by-product recovery plant at Gadsden, Alabama.
June 18, 1980	Plant visit to Republic Steel Corporation coke by-product recovery plant at Youngstown, Ohio, to survey and collect samples.
June 20, 1980	Section 114 letter requesting information regarding emissions from final-cooler cooling tower sent to Bethlehem Steel Corporation plant at Bethlehem, Pennsylvania.
July 7-25, 1980	Emission testing at Bethlehem Steel Corporation coke by-product recovery plant at Bethlehem, Pennsylvania.
July 28 - August 8, 1980	Emission testing at U.S. Steel Corporation coke by-product recovery plant at Clairton, Pennsylvania.
August 11-15, 1980	Emission testing at Wheeling-Pittsburgh Steel Corporation coke by-product recovery plant at Monessen, Pennsylvania.
August 28, 1980	Pretest survey at CF&I Steel Company coke by-product recovery plant at Pueblo, Colorado.

(continued)

TABLE A-1. (continued)

Date	Event
September 8-12, 1980	Emission testing at U.S. Steel Corporation coke by-product recovery plant at Fairless Hills, Pennsylvania.
September 22-26, 1980	Emission testing at Bethlehem Steel Corporation coke by-product recovery plant at Burns Harbor, Indiana
October 6-9, 1980	Emission testing at CF&I Steel Company coke by-product recovery plant at Pueblo, Colorado.
October 15-17, 1980	Emission testing at Republic Steel Corporation coke by-product recovery plant at Gadsden, Alabama.
November 24 - December 3, 1980	Emission testing at Wheeling-Pittsburgh coke by-product recovery plant at Monessen, Pennsylvania.
December 8-15, 1980	Emission testing at Republic Steel Corporation coke by-product recovery plant at Gadsden, Alabama.
January 12-23, 1981	Emission testing at Bethlehem Steel Corporation coke by-product recovery plant at Bethlehem, Pennsylvania.
February 6, 1981	Concurrence on regulatory alternatives.
February 27, 1981	Draft BID Chapters 3 through 6.3 distributed to industry for review and comment.
March 1981	Completion of Phase II.
May 18, 1981	Meeting with American Iron and Steel Institute.
October 1981	Working Group review.
October 28, 1981	Draft preamble, regulation, and BID distributed to NAPCTAC members, industry representatives, environmental groups, EPA Regions, and others in preparation for NAPCTAC meeting.
December 1-2, 1981	NAPCTAC meeting.
January 18- February 11, 1982	Section 114 requests for additional information regarding the design, operation, and costs of emission control systems sent to Bethlehem Steel Corporation, Sparrows Point, Maryland; Republic Steel Corporation, Cleveland, Ohio, and Gadsden, Alabama; U.S. Steel Corporation, Clairton,

(continued)

TABLE A-1. (continued)

Date	Event
	Pennsylvania, Gary, Indiana, and Fairless Hills, Pennsylvania; and Armco Steel Corporation, Houston, Texas.
January 20, 1982	Plant visit to Bethlehem Steel Corporation, Sparrows Point, Maryland
January 21, 1982	Plant visit to Republic Steel Corporation, Cleveland, Ohio.
February 5-11, 1982	Section 114 letter requesting information regarding benzene fugitive emissions from equipment components sent to CF&I Steel Corporation, Pueblo, Colorado; Shenago, Incorporated, Neville Island, Pennsylvania; Lone Star Steel Company, Lone Star, Texas; National Steel Corporation, Detroit, Michigan, and Browns Island, West Virginia; Keystone Coke Company, Swedeland, Pennsylvania; Koppers Company, Incorporated, Toledo, Ohio; and Jim Walters Resources, Inc., Birmingham, Alabama.
March 4, 1982	Plant visit to Armco Steel Corporation, Houston, Texas.
March 8, 1982	Plant visit to U.S. Steel Corporation, Fairless Hills, Pennsylvania.
July 1982	Draft preamble, regulation, and BID distributed to Agency representatives for Steering Committee review.
March 1983	Draft preamble, regulation, and BID distributed to Agency representatives for Steering Committee review.
July 1983	Draft preamble, regulation, and BID distributed to Agency representatives for internal review.
February 1983	Draft preamble, regulation, and BID distributed for A.A. review.

APPENDIX B

INDEX TO ENVIRONMENTAL IMPACT CONSIDERATIONS

APPENDIX B

INDEX TO ENVIRONMENTAL IMPACT CONSIDERATIONS

Agency guidelines for preparing regulatory action environmental impact statements (39 FR 37419)	Location within the Background Information Document
1. Background and description	
a. Summary of regulatory alternatives	The control options from which standards will be chosen for proposal and associated impacts are summarized in Chapter 1; a detailed description of the control options is provided in Chapter 6.
b. Statutory basis for proposing standards	The statutory basis for proposing standards is summarized in Chapter 2.
c. Relationship to other regulatory agency actions	The various relationships between the regulatory agency actions are discussed in Chapters 3 and 7.
d. Industry affected by the regulatory alternatives	A discussion of the industry affected by the regulatory alternatives is presented in Chapter 3. Further details covering the "business/economic" nature of the industry is presented in Chapter 9, Section 9.1.
e. Specific processes affected by the regulatory alternatives	The specific processes and facilities affected by the regulatory alternatives are summarized in Chapter 6. A detailed technical discussion of the sources and processes affected by the control options is presented in Chapter 3.

(continued)

INDEX TO ENVIRONMENTAL IMPACT CONSIDERATIONS (continued)

Agency guidelines for preparing regulatory action environmental impact statements (39 FR 37419)	Location within the Background Information Document
2. Impacts of the alternatives	
a. Air pollution	The air pollution impacts of the control options are discussed in Chapter 7, Sections 7.1 and 7.2. Supplementary information regarding emission measurements and estimates is presented in Appendix C. The methodology used during emission testing is discussed in Appendix D.
b. Water pollution	The water pollution impacts of the control options are discussed in Chapter 7, Section 7.3.
c. Solid waste disposal	The impact of the control options on solid waste disposal is discussed in Chapter 7, Section 7.4.
d. Energy impact	The energy impacts are discussed in Chapter 7, Section 7.5.
e. Economic impact	The cost of control options and the economic impacts of the control options are discussed in Chapters 8 and 9. Supplementary information for the Chapter 8 cost analysis is presented in Appendix F.
f. Health impact	The health risk impacts of the control options are discussed in Appendix E.

APPENDIX C

EMISSION MEASUREMENTS AND ESTIMATES

APPENDIX C
EMISSION MEASUREMENTS AND ESTIMATES

C.1 OBJECTIVE

The purpose of this appendix is to present and summarize data gathered during the development of a standard for benzene emissions from the coke oven by-product recovery plants.

C.2 DISCUSSION

The source testing program was conducted in two phases:

- Testing of process unit emissions such as those from the tar dehydrator and cooling tower.
- Testing of fugitive emissions from leaking equipment components, such as pumps and valves.

The testing of process units for benzene emissions was conducted at seven by-product recovery plants. Source and fugitive emissions from process units were measured by Modified Method 110 (Section D.1.1) and Tracer Gas Method (Section D.1.2), respectively. Tables C-1 through C-23 contain the emission data for process units. The major sources of benzene from the process units are the tar-dewatering tanks, naphthalene handling and drying operations, final-cooler cooling tower, light-oil condensers, and light-oil storage.

Fugitive emissions from leaking pumps, valves, flanges, and exhausters were field tested at three by-product recovery plants. The measurement methods are described in Section D.4 and the data are summarized in Tables C-26 through C-32. Results of the testing program and data analysis are discussed in Section C.4.

As stated in the introduction to the Compilation of Air Pollutant Emission Factors (AP-42),[1] the techniques for determining emission factors include detailed source testing, isolated source measurements

with incomplete background information, material/balance studies, and engineering appraisals. The quality of the emission factors generally becomes worse in the order stated above. Ratings A through E were assigned for the published emission factors to alert the AP-42 user to this decrease in quality.

C.3 TEST DATA FOR PROCESS UNITS

Seven coke by-product plants were tested for process unit emissions. These representative plants include U.S. Steel Corporation at Fairless Hills[2] and Clairton,[3] Republic Steel Corporation at Gadsden,[4] Wheeling-Pittsburgh Steel Corporation at Monessen,[5] Bethlehem Steel Corporation at Burns Harbor[6] and Bethlehem,[7] and CF&I Steel Corporation at Pueblo.[8] The process unit emission data are presented by plant (Tables C-1 through C-7), gas phase sources (Tables C-8 through C-16), and liquid phase sources (Tables C-17 through C-23). Emission measurement methods are discussed in detail in Section D.1.

C.4 TEST DATA FOR FUGITIVE EMISSIONS FROM LEAKS

Field testing was conducted at three by-product recovery plants to collect data on nonmethane hydrocarbon and benzene emissions from leaking valves, pumps, flanges, threaded fittings, and exhausters. The objectives of the field testing were:[9]

- To count and screen all valves and pump seals and one-third of all flanges on process lines containing at least 4 weight percent benzene; also to screen all exhauster seals and to determine the percentage of benzene in each process line surveyed.

- To measure the mass emission rate of benzene and of nonmethane hydrocarbons at each leaking source identified during the screening.

The field testing was conducted at Wheeling-Pittsburgh Steel, Monessen, Pennsylvania;[10] Bethlehem Steel, Bethlehem, Pennsylvania;[11] and Republic Steel, Gadsden, Alabama.[12] The objectives of the field testing were met and the results are summarized in the following subsections.

A statistical analysis was performed on the data from the three plants and a summary report was issued.[9] The objectives of the data analysis were:

- To compile leak frequency distributions for different benzene service populations (all sources screened, all sources on lines with at least 4 weight percent benzene, and all sources on lines with at least 10 weight percent benzene).

- To compare the percentage of benzene in the line to the estimated percentage of benzene in the leak to determine if the benzene concentration in the line is an adequate identifier of potentially significant sources.

- To prepare benzene and nonmethane hydrocarbon emission factors for all sources and for sources on lines with at least 10 percent benzene.

- To compare the coke oven by-product recovery emission factors with emission factors for petroleum refineries.

These objectives were met and details are provided in the following subsections. A brief summary of the conclusions is given in the following paragraphs.

An examination of the population data indicates that the bulk of benzene fugitive emissions can be attributed to sources on lines containing at least 10 percent benzene. Usually, only the light-oil product lines contain 10 percent or more benzene. These data indicate that no sources were found in the 4- to 10-percent benzene service range.

The study concluded that the percentage of benzene in the process stream is a good indicator of the percentage of benzene in a leak from that process stream. The program was not designed to produce an extensive data base to develop firm emission factors; however, it was designed to compare emission rates from by-product plant sources with the extensive data base on emission rates from petroleum refinery sources. The study concluded that the mean emission factors for similar leaking equipment in the two industries are reasonably close and that the confidence intervals for the two show a significant degree of overlap. Therefore, the use of petroleum refinery data to characterize equipment leak rates in by-product plants is reasonable.[13]

C.4.1 Screening Value Distributions and Leak Rates From Sampled Sources[9]

Fugitive emission screening was performed on fittings on process lines containing at least 4 weight percent benzene. Benzene is concentrated in the light-oil recovery section, so almost all of the testing was performed in this area. All three plants have light-oil recovery units that operate by the absorption/stripping method of light-oil recovery. At two of three plants, the light oil is further fractionated.

The fugitive emission testing at each of the three plants included both "screening" and "bagging" procedures. Screening is a generic term covering any quick portable method of detecting fugitive emissions. The initial screening in this study was performed with a Century Systems Organic Vapor Analyzer (OVA) Model 108.* Bagging is a technique for measuring fugitive emissions by enclosing the source in Mylar®* and analyzing an equilibrium flow of air through the enclosure. The screening and bagging procedures are described in more detail in Appendix D, Subsection D.4.

Screening value distributions are presented in Table C-26 for all tested plants. These distributions are reported by type of fitting and by the concentration of benzene in the line. Three subcategories for the amount of benzene in the line were considered:

- All service (i.e., all sources screened)
- Sources on lines with at least 4 weight percent benzene
- Sources on lines with at least 10 weight percent benzene.

However, no sources were found with benzene between 4 and 10 weight percent.

Sources with less than 4 weight percent benzene, other than exhausters, were not screened intentionally. But at the Wheeling-Pittsburgh Steel and Bethlehem Steel plants, it was not immediately

*The mention of trade names or commercial products does not constitute endorsement or recommendation for use.

known that the wash oil from the light-oil absorbers contained less than 4 weight percent benzene. Hence, these wash-oil lines were screened, even though subsequent analysis of samples from these lines showed that the benzene concentration was less than 4 weight percent.

Exhauster seals also were tested, even though these are in the service of coke oven gas with less than 4 weight percent benzene, because testing in petroleum refineries indicated that this type of fitting can be a major source of emissions. The exhausters are located on the coke oven gas line upstream from the light-oil recovery unit. The distribution of screening values for exhausters is also presented in Table C-26.

Table C-27 summarizes the benzene and nonmethane hydrocarbon leak rates in kilograms per day. All valves, pump seals, and exhausters that caused an OVA reading greater than the ambient reading or that had a visible liquid leak were sampled. Vapor phase leak rates were measured using the bagging technique. Liquid leak rates were measured directly by timed collection in a graduated cylinder, and a sample of the collected liquid was analyzed for benzene. Each sampled source was screened immediately before sampling with an OVA and with a J. W. Bacharach Instrument Company "TLV Sniffer."* These screening values are shown in Table C-27 along with the weight percent benzene in the line.

C.4.2 Comparison of Benzene Concentration in the Leak and in the Line

Table C-28 provides a comparison of the weight percent benzene in the vapor, liquid, and total leak with the weight percent benzene in the line. The weight percent benzene in the vapor sample is not directly comparable to benzene in the line, because the sample is diluted with air. These values for percent benzene are calculated as the ratio of benzene to nonmethane hydrocarbon in the sample. This method is probably accurate unless the leak is small. Those values of benzene in the leak that are much less than the benzene in the line

---

*The mention of trade names or commercial products does not constitute endorsement or recommendation for use.

represent samples that had only slightly more benzene and nonmethane hydrocarbon than the ambient air samples had. In these cases, the sampling and analytical precision is not sufficient to resolve the benzene concentration accurately and results in a lack of correlation between sample and line benzene concentrations.

The data show that the average percent difference between the weight percent benzene in the line and in the leak was -2 percent and the absolute value of the percent difference was 26 percent. The largest percent differences were found for the sources with the lowest leak rates. These difference are within the accuracy of the determination of the percent benzene and the emission rate. These data indicate that the percentage of benzene in the process stream is generally a good indicator of the percentage of benzene in a leak from the process stream. Therefore, the VOC emission factor is multiplied by the weight percent benzene in the process stream to derive a benzene emission factor for leaking equipment from the extensive VOC data base. For example, if a light-oil stream contains 70 percent benzene, the VOC emission factor for a piece of leaking equipment in light-oil service would be multiplied by 0.7 to estimate the benzene emission factor.

C.4.3 Comparison of Emission Factors

Emission factors were developed for the by-product plant sources from the estimation methodology described in Reference 9. The results for all sources screened are given in Table C-29, and the results for sources with 10 percent or more benzene in the line are given in Table C-30. In Figures C-1 to C-3, these emission factors are compared graphically with emission factors developed during the study of leaks at refineries. Tabular comparisons are presented in Tables C-31 and C-32.

In the light-oil plant, the process streams of interest contain a mixture of benzene, toluene, and xylene (light oil, BTX) or refined benzene only and are classed as a light liquid. (A light liquid is defined as a petroleum liquid with a vapor pressure greater than the vapor pressure of kerosene, about 0.3 kPa at 20° C.) Consequently,

the emission factors for equipment in light liquid service in petroleum refineries are compared with emission factors developed from the by-product plant data for equipment (pumps and valves) used in light oil, BTX, or benzene service. Exhausters are used in by-product plants to provide the motive power for coke oven gas and are located downstream of tar removal and upstream of the light-oil recovery system. The coke oven gas has a relatively low concentration of volatile organic compounds (VOC's) and is composed chiefly of hydrogen (~45 to 65 percent) and methane (~20 to 30 percent). Compressors in hydrogen service are the petroleum refinery equipment most comparable to exhausters; consequently, data for by-product plant exhausters and petroleum refinery compressors (H_2 service) are compared in the tables.

Table C-31 shows the leak frequency by equipment type as measured in the petroleum refinery study and in the by-product plant study. The valve leak frequency for coke by-product plants is about one-half that of the refinery plants, while the pump leak frequency for by-product plants is about twice that of the refinery plants. However, the 95-percent confidence intervals for the by-product plant data and the petroleum refinery data show a significant degree of overlap. A comparison is not made in Table C-31 for the leak frequency of exhausters and compressors because two of the three by-product plants tested had exhauster seals that effectively controlled emissions, whereas a very high percentage of the compressors were not fitted with effective seals. Only 8.8 percent of the exhausters that were tested had leaks.

The emission factors for nonmethane hydrocarbon leaks from valves, pumps, and exhausters (compressors) are compared in Table C-32 and graphical comparisons are given in Figures C-1, C-2, and C-3. For all sources, the 95-percent confidence intervals for the petroleum refinery data fall within the 95-percent confidence intervals for the by-product plant data. The confidence intervals for the petroleum refinery emission factors are smaller than those for coke by-product plants because the refinery data are more extensive.

The testing program at by-product plants was not designed to produce an extensive data base from which firm emission factors could

be developed. However, a previous study of fugitive emissions from petroleum refining was designed to develop emission factors for similar equipment types from an extensive data base. A comparison of emission factors for comparable sources in coke by-product plants and refineries indicates that the mean emission factors are reasonably close, especially for valves, and that the confidence intervals for all categories show a significant degree of overlap. Therefore, the use of refinery data to characterize the coke by-products fugitive emissions is reasonable.

C.5 REFERENCES

1. Masser, C. C. Compilation of Air Pollutant Emission Factors--Third Edition. Publication Number AP-42. U.S. Environmental Protection Agency. Research Triangle Park, NC. August 1977.

2. U.S. Environmental Protection Agency. Coke Oven By-Product Plants, Emission Test Report, U.S. Steel Corporation, Fairless Hills, Pennsylvania. EMB No. 80-BYC-8. March 1981.

3. U.S. Environmental Protection Agency. Coke Oven By-Product Plants, Emission Test Report for U.S. Steel Corporation, Clairton, Pennsylvania. EMB No. 80-BYC-2. March 1981.

4. U.S. Environmental Protection Agency. Coke Oven By-Product Plants, Emission Test Report for Republic Steel Corporation, Gadsden, Alabama. EMB No. 80-BYC-4. March 1981.

5. U.S. Environmental Protection Agency. Coke Oven By-Product Plants, Emission Test Report for Wheeling-Pittsburgh Steel Corporation, Monessen, Pennsylvania. EMB No. 80-BYC-3. March 1981.

6. U.S. Environmental Protection Agency. Coke Oven By-Product Plants, Emission Test Report for Bethlehem Steel Corporation, Burns Harbor, Indiana. EMB No. 80-BYC-5. March 1981.

7. U.S. Environmental Protection Agency. Coke Oven By-Product Plants, Emission Test Report for Bethlehem Steel Corporation, Bethlehem, Pennsylvania. EMB No. 80-BYC-1. March 1981.

8. U.S. Environmental Protection Agency. Coke Oven By-Product Plants, Emission Test Report for CF&I Steel Corporation, Pueblo, Colorado. EMB No. 80-BYC-6. March 1981.

9. U.S. Environmental Protection Agency. Benzene Fugitive Leaks: Leak Frequency and Emission Factors for Fittings in Coke Oven By-Product Plants. EMB No. 81-BYC-12. January 1982.

10. U.S. Environmental Protection Agency. Benzene Fugitive Leaks: Emission Test Report for Wheeling-Pittsburgh Steel Corporation, Monessen, Pennsylvania. EMB No. 80-BYC-11. August 1981.

11. U.S. Environmental Protection Agency. Benzene Fugitive Leaks: Emission Test Report for Bethlehem Steel Corporation, Bethlehem, Pennsylvania. EMB No. 80-BYC-9. August 1981.

12. U.S. Environmental Protection Agency. Benzene Fugitive Leaks: Emission Test Report for Republic Steel Corporation, Gadsden, Alabama. EMB No. 80-BYC-10. August 1981.

TABLE C-1. U.S. STEEL CORPORATION, FAIRLESS HILLS, PENNSYLVANIA[6]

Source type	Date	Sample period	Sample location	Temperature (°F)	Flowrate standard condition (stdft³/min)	Benzene concentration (ppm)	Benzene emission (lb/h)
Gas phase[a]							
Cooling tower--direct-water cooler	9/9/80	1120-1245	Tower top		297,000	18.77	67.60
		1117-1530			255,000	19.80	61.20
		1547-1700			265,000	44.40[b]	-
	9/11/80	1525-1650			369,000	18.30	81.90
Wash-oil decanter	9/10/80	1410-1440	Vent		96	706.00	0.82
		1508-1538			67	1,052.00	0.85
		1555-1625			110	692.00	0.95
Tar dehydrators--west tank	9/11/80	1015-1045	Vent		120	740.00	1.04
		1350-1420			410	3,010.00	15.01
		1730-1800			260	1,520.00	4.79
Tar dehydrators--east tank	9/11/80	1100-1130	Vent		76	2,410.00	2.22
		1345-1415			120	840.00	1.17
		1730-1800			110	2,990.00	3.89
Liquid phase							
Cooling tower	9/9/80	1410	Cooling tower--hot well	93		8.20	
		1535		96		48.20	
		1715		97		98.80	
		1410	Cooling tower--cool well	78		1.00	
		1535		78		1.00	
		1715		79		0.80	
Wash-oil decanter	9/10/80	1640	Wash-oil decanter--dipped from hatchway	205		42.20	
				205		40.30	
				205		50.30	
Tar Dehydrators	9/11/80	1805	West tank--inlet	196		285.00	
				196		295.00	
				196		251.00	
	9/11/80	1820	West tank--dipped from tank	207		629.00	
				207		599.00	
				207		634.00	
	9/11/80	1825	East tank--dipped from tank	219		282.00	
				219		286.00	
				219		261.00	

[a]Standard condition--saturated at 68° F, 29.92 inHg.

[b]Contaminated Tedlar bag.

TABLE C-2. REPUBLIC STEEL CORPORATION, GADSDEN, ALABAMA[a]

Source type	Date	Sample period	Sample location	Temperature (°F)	Flowrate standard condition (stdft^3/min)	Benzene concentration (ppm)	Benzene emission (lb/h)
Gas phase[a]							
Light-oil intercepting sump	10/16/80	a.m. (test no. 1)	Downwind		TG	4.44	4.05
					TG	2.19	3.56
					TG	1.72	5.21
					TG	2.62	3.48
					TG	2.53	3.56
					TG	3.50	6.45
	10/16/80	p.m. (test no. 2)			TG	3.43	4.47
					TG	3.20	3.81
					TG	3.48	7.98
					TG	4.58	4.65
					TG	5.25	5.81
					TG	3.43	5.18
	10/17/80	a.m. (test no. 3)			TG	1.86	5.34
					TG	1.09	6.85
					TG	4.53	6.69
					TG	1.33	5.93
					TG	2.68	4.53
					TG	4.74	4.95
Liquid phase							
Light-oil intercepting sump	10/16/80	1125	West side-inlet	87		25,800.00	
		1127	middle	82		27,900.00	
		1130	outlet	114		18.00	
	10/16/80	1135	East side-inlet	146		97.10	
		1137	middle	139		86.70	
		1140	outlet	156		1.00	

NOTE: TG = Tracer gas method used (Isobutane).

[a]Standard conditions--saturated at 68° F, 29.92 inHg.

TABLE C-3. WHEELING-PITTSBURGH STEEL CORPORATION, MONESSEN, PENNSYLVANIA[9]

Source type	Date	Sample period	Sample location	Temperature (°F)	Flowrate standard condition (stdft^3/min)	Benzene concentration (ppm)	Benzene emission (lb/h)
Gas phase[a]							
Tar storage--tank no. 2	8/12/80	1530-1600	Vent		20	1,043.10	0.25
		1710-1740			19	1,658.10	0.39
	8/13/80	1015-1045			25	2,772.20	0.85
Light-oil storage--tank no. 7	8/12/80	1532-1602	Vent		<4	29,500.00	<1.20
		1645-1715			<4	22,900.00	<0.90
	8/13/80	1022-1052			<4	25,400.00	<1.10
Tar-intercepting sump	8/12/80	1125	Downwind		TG	-	4.59
		1422			TG	-	3.71
	8/13/80	0835			TG	-	4.91
		1125			TG	-	4.65
		1323			TG	-	2.99
		1407			TG	-	4.08
Liquid phase							
Tar storage--tank no. 2	8/13/80	1520	Flushing liquor on surface in tank	168		1,580.00	
				168		1,672.00	
				168		1,565.00	
	8/13/80	1455	Inlet to tar tank--from pump	160		1,765.00	
				160		2,159.00	
				160		1,677.00	
Light-oil storage--tank no. 7	8/13/80	1505	Light oil outlet--from pump	77		680,000.00	
				77		750,000.00	
				77		670,000.00	
Common tar sump							
Heavy fraction--							
Sample 1	8/13/80	1345	Dipped from the sump	150		1,740.00	
Sample 2				150		2,020.00	
Sample 3				150		1,400.00	
Light fraction--							
Sample 1	8/13/80	1345	Dipped from the sump	150		4.00	
Sample 2				150		1.03	
Sample 3				150		6.30	

NOTE: TG = Tracer gas method used (Isobutane).

[a]Standard condition--saturated at 68° F, 29.92 inHg.

TABLE C-4. BETHLEHEM STEEL CORPORATION, BURNS HARBOR, INDIANA[10]

Source type	Date	Sample period	Sample location	Temperature (°F)	Flowrate standard condition (stdft³/min)	Benzene concentration (ppm)	Benzene emission (lb/h)
Gas phase[a]							
Tar dehydrator	9/24/80	1005-1035	(1) Vent stack		38	8,615.20	3.97
					36	9,968.00	4.30
					35	8,816.40	3.69
Tar decanter B	9/23/80	1020-1050	Vent A		58	4,760.00	3.34
		1150-1220			55	3,198.70	2.14
		1407-1437			69	4,701.60	3.94
	9/23/80	1020-1050	Vent B		188	1,819.00	4.14
		1150-1220			197	2,252.20	5.38
		1407-1437			278	2,350.80	7.91
	9/23/80	1020-1050	Vent C		59	850.00	0.61
		1150-1220			56	1,126.10	0.76
		1407-1437			66	1,207.70	0.96
Liquid phase							
Tar dehydrator	9/23/80	1420	Tar dehydrator outlet	162		1,956.00	
				162		1,834.00	
				162		2,171.00	
Tar decanter liquid	9/23/80	1525	Dipped from center hatch (between Vent B and C)	120		181.60	
				120		58.10	
				120		35.50	
	9/23/80	1415	Weir outlet (near Vent C)	178		4,387.00	
				178		4,637.00	
				178		4,495.00	

[a]Standard condition--saturated at 68° F, 29.92 inHg.

TABLE C-5. BETHLEHEM STEEL CORPORATION, BETHLEHEM, PENNSYLVANIA[11]

Source type	Date	Sample period	Sample location	Temperature (°F)	Flowrate standard condition (stdft³/min)	Benzene concentration (ppm)	Benzene emission (lb/h)	
Gas phase[a]								
							1 Fan	4 Fans
Cooling tower--direct-water final cooler	7/10/80	1034-1140	Vent		109,000	12.56	16.60	66.20
		1150-1255			114,000	14.38	19.90	79.50
		1417-1520			108,000	14.27	18.60	74.50
Tar decanter--no. 5 battery	7/8/80	1453-1523	Vent		170	1,447.20	2.90	
	7/9/80	1020-1121			160	717.80	1.40	
		1530-1600			150	1,975.00	3.60	
Light-oil condenser vent	7/11/80	1015-1045	Condenser vent		23	91,900.00	25.30	
		1056-1126			23	109,800.00	31.10	
		1212-1242			21	53,300.00	b	
		1600-1630			22	110,500.00	29.90	
Naphthalene drying tank	7/18/80	1353-1423[c]	Vent		71[c]	1,824.00[c]	1.57[c]	
	7/22/80	1337-1400			106	168.80	0.22	
		1610-1640			3	428.11	0.02	
		1813-1843			18	32.34	0.01	
		2130-2200			27	16.09	0.01	
	7/23/80	2415-2445			27	40.78	0.01	
		0220-0300			34	45.40	0.02	
		0255-0320			14	218.16	0.04	
		0404-0455			22	117.05	0.03	
Denver flotation units	7/8/80	1124	Downwind		TG	3.51	9.60	
					TG	8.61	7.35	
					TG	14.51	8.91	
	7/15/80	1030			TG	5.16	8.64	
					TG	5.42	8.48	
					TG	18.96	27.86[d]	
	7/15/80	1400			TG	6.64	12.10	
					TG	7.16	9.80	
					TG	13.67	18.98[d]	
Naphthalene melt pit	7/15/80	0800	Downwind		TG	11.48	25.13	
					TG	17.54	26.75	
					TG	16.58	27.81	
	7/15/80	0835			TG	9.45	13.01	
					TG	13.48	13.75	
					TG	14.90	13.45	
	7/16/80	0730			TG	14.99	20.86	
					TG	15.18	17.16	
					TG	10.22	23.35	

See footnotes at end of table.

(continued)

TABLE C-5. (continued)

Source type	Date	Sample period	Sample location	Temperature (°F)	Flowrate standard condition (stdft^3/min)	Benzene concentration (ppm)	Benzene emission (lb/h)
Naphthalene melt pit (con.)	7/16/80	0809	Downwind (con.)		TG	11.35	11.22[e]
					TG	5.48	4.55[e]
					TG	8.87	11.23[e]
	7/17/80	0715			TG	6.56	13.90
					TG	6.86	8.24
					TG	6.80	6.48
		0818			TG	5.28	33.70
					TG	5.61	21.87
					TG	6.16	24.44
	7/18/80	0736			TG	18.60	9.75
					TG	19.68	4.99
					TG	19.44	7.04
		0830			TG	4.41	2.98
					TG	5.70	2.48
					TG	6.80	2.39
Background for naphthalene melt pit	7/17/80	1122	Downwind		TG	14.65	8.38
					TG	15.21	6.72
					TG	9.71	6.94
		1155			TG	13.49	15.27
					TG	15.82	7.69
					TG	13.43	6.17
Liquid phase							
Cooling tower	7/10/80	1540	Hot well	86		7.10	
				86		6.40	
	7/10/80	1545	Cold well	82		3.20	
						3.80	
Tar decanter--no. 5 battery	7/8/80	1525	Flushing liquor on surface	176		5.60	
		1600		180		4.20	
	7/9/80	1415	Flushing liquor inlet from coke gas cross-over main	--		1.60	
				--			
	7/9/80	1545	Inlet to decanter from primary cooler, heavy fraction (tar)	140		1,736.00	
						1,888.00	
	7/9/80	1545	Light fraction (liquor)	140		16.40	
						16.30	

NOTE: TG gas method used (Isobutane).

[a]Standard condition--saturated at 68° F, 29.92 inHg.

[b]Run 3 not included in calculation because of sampling system leak.

[c]Trial run.

[d]Data rejected.

[e]Run voided because of leak in flowmeter.

TABLE C-6. CF&I STEEL CORPORATION, PUEBLO, COLORADO[12]

Source type	Date	Sample period	Sample location	Temperature (°F)	Flowrate standard condition (stdft^3/min)	Benzene concentration (ppm)	Benzene emission (lb/h)
Gas phase[a]							
Cooling tower--tar-bottom final cooler	10/7/80	0855-0955	Tower top		407,000	2.50	12.30
		1005-1100			384,000	2.38	11.10
		1102-1155			470,000	2.17	12.40
Tar storage tank	10/7/80	1415-1445	Vent on tank		300	622.00	2.30
		1520-1550			310	730.00	2.70
		1600-1630			240	539.00	1.60
Liquid phase							
Cooling tower--tar-bottom final cooler	10/7/80	1210	Hot well	96		38.20	
				96		51.90	
				96		115.10	
	10/7/80	1140	Cool well	78		4.10	
				78		8.90	
				78		9.40	
Tar storate tank	10/7/80	1700	Tar storage tank--dipped from top	145		16.80	
				145		75.40	
				145		6.20	

[a]Standard condition--satruated at 68° F, 29.92 inHg.

TABLE C-7. UNITED STATES STEEL CORPORATION, CLAIRTON, PENNSYLVANIA[7]

Source type	Date	Sample period	Sample location	Flowrate standard condition (stdft^3/min)	Benzene concentration (ppm)	Benzene emission (lb/h)
Gas Phase[a]						
Light-oil contaminated sump	8/1/80	1140	Downwind	TG	-	4.16
	8/4/80	1000		TG	-	3.86
	8/5/80	0925		TG	-	3.70
				TG	-	3.20
				TG	-	3.59
				TG	-	4.28

NOTE: TG Tracer gas method used (Isobutane).

[a]Standard condition--saturated at 68° F, 29.92 inHg.

TABLE C-8. COOLING TOWERS

Source location	Date	Sample period	Sample location	Flowrate standard condition (stdft^3/min)	Benzene concentration (ppm)	Benzene emission (lb/h)	
COOLING TOWER--DIRECT-WATER FINAL COOLER							
Gas Phase							
U.S. Steel, Fairless Hills, PA[6]	9/9/80	1120-1245	Tower	297,000	18.77	67.60	
		1117-1530		255,000	19.80	61.20	
		1547-1700		265,000	44.40[a]	--	
	9/11/80	1525-1650		369,000	18.30	81.90	
						1 fan	4 fans
Bethlehem Steel, Bethlehem, PA[11]	7/10/80	1034-1140	Vent	109,000	12.56	16.60	66.20
		1150-1255		114,000	14.38	19.90	79.50
		1417-1520		108,000	14.27	18.60	74.50
COOLING TOWER--TAR-BOTTOM FINAL COOLER							
Gas Phase							
CF&I Steel Corporation, Pueblo, CO[12]	10/7/80	0855-0955	Tower	407,000	2.50	12.30	
		1005-1100		384,000	2.38	11.10	
		1102-1155		470,000	2.17	12.40	

[a]Contaminated Tedlar bag.

TABLE C-9. NAPHTHALENE PROCESSING AND HANDLING

Source location	Date	Sample period	Sample location	Flowrate standard condition (stdft^3/min)	Benzene concentration (ppm)	Benzene emission (lb/h)
Gas Phase						
Bethlehem Steel, Bethlehem, PA[11]	7/18/80	1353-1423[a]	Vent	71[a]	1,824.00[a]	1.57[a]
Napthalene drying tank[a]	7/22/80	1337-1400		106	168.80	0.22
		1610-1640		3	428.11	0.02
		1813-1843		18	32.34	0.01
		2130-2200		27	16.09	0.01
	7/23/80	2415-2445		27	40.78	0.01
		0220-0300		34	45.40	0.02
		0255-0320		14	218.16	0.04
		0404-0455		22	117.05	0.03
Denver flotation units	7/8/80	1124	Downwind	TG	3.51	9.60
				TG	8.61	7.35
				TG	14.51	8.91
	7/15/80	1030	Downwind	TG	5.16	8.64
				TG	5.42	8.48
				TG	18.96	27.86[b]
	7/15/80	1400		TG	6.64	12.10
				TG	7.16	9.80
				TG	13.67	18.98[b]
Naphthalene melt pit	7/15/80	0800	Downwind	TG	11.48	25.13
				TG	17.54	26.75
				TG	16.58	27.81
	7/15/80	0835		TG	9.45	13.01
				TG	13.48	13.75
				TG	14.90	13.45
	7/16/80	0730		TG	14.99	20.86
				TG	15.18	17.16
				TG	10.22	23.35
	7/16/80	0809		TG	11.35	11.22[c]
				TG	5.48	4.55[c]
				TG	8.87	11.23[c]
	7/17/80	0715		TG	6.56	13.90
				TG	6.86	8.24
				TG	6.80	6.48
		0818		TG	5.28	33.70
				TG	5.61	21.87
				TG	6.16	24.44
	7/18/80	0736		TG	18.60	9.75
				TG	19.68	4.99
				TG	19.44	7.04
		0830		TG	4.41	2.98
				TG	5.70	2.48
				TG	6.80	2.39
Background for naphthalene melt pit	7/17/80	1122	Downwind	TG	14.65	8.38
				TG	15.21	6.72
				TG	9.71	6.94
		1155		TG	13.49	15.27
				TG	15.82	7.69
				TG	13.43	6.17

NOTE: TG Tracer gas method used (Isobutane).

[a]Trial run.

[b]Data rejected.

[c]Run voided because of leak in flowmeter.

TABLE C-10. SUMPS

Source location	Date	Sample period	Sample location	Flowrate standard condition (stdft^3/min)	Benzene concentration (ppm)	Benzene emission (lb/h)
Gas Phase[a]						
Republic Steel, Gadsden, AL[8] Light-oil intercepting sump	10/16/80	a.m. (Test #1)	Downwind	TG	4.44	4.05
				TG	2.19	3.56
				TG	1.72	5.21
		--		TG	2.62	3.48
				TG	2.53	3.56
				TG	3.50	6.45
		p.m. (Test #2)		TG	3.43	4.47
				TG	3.20	3.81
				TG	3.48	7.98
				TG	4.58	4.65
				TG	5.25	5.81
				TG	3.43	5.18
	10/17/81	a.m. (Test #3)		TG	1.86	5.34
				TG	1.09	6.85
				TG	4.53	6.69
				TG	1.33	5.93
				TG	2.68	4.53
				TG	4.74	4.95
Wheeling-Pittsburgh Steel, Manessen, PA[9] Tar-intercepting sump	8/12/80	1125	Downwind	TG	--	4.59
		1422		TG	--	3.71
	8/13/80	2035		TG	--	4.91
		1125		TG	--	4.65
		1323		TG	--	2.99
		1407		TG	--	4.08
U.S. Steel, Clairton, PA[7] Light-oil contaminated sump	8/1/80	1140	Downwind	TG	--	4.16
				TG	--	3.86
	8/4/80	1000		TG	--	3.70
	8/5/80	0925		TG	--	3.20
				TG	--	3.59
				TG	--	4.28

NOTE: TG Tracer gas method used (Isobutane).

[a]Standard condition--saturated at 68° F, 29.92 inHg.

TABLE C-11. TAR DEHYDRATORS

Source location	Date	Sample period	Sample location	Flowrate standard condition (stdft^3/min)	Benzene concentration (ppm)	Benzene emission (lb/h)
Gas Phase[a]						
Bethlehem Steel, Burns Harbor, IN[10]	9/24/80	1005-1035	Stack vent	38	8,615.20	3.97
Tar dehydrator				36	9,968.00	4.30
				35	8,816.40	3.69
U.S. Steel, Fairless Hills, PA[6]						
Tar dehydrators--west tank	9/11/80	1015-1045	Stack vent	120	740.00	1.04
		1350-1420		410	3,010.00	15.01
		1730-1800		260	1,520.00	4.79
Tar dehydrators--east tank	9/11/80	1100-1130	Stack vent	76	2,410.00	2.22
		1345-1415		120	840.00	1.17
		1730-1800		110	2,990.00	3.89

[a]Standard condition--saturated at 68° F, 29.92 inHg.

TABLE C-12. LIGHT-OIL STORAGE

Source location	Date	Sample period	Sample location	Flowrate standard condition (stdft^3/min)	Benzene concentration (ppm)	Benzene emission (lb/h)
Gas Phase[a]						
Wheeling-Pittsburgh Steel, Monessen, PA[9]						
Light-oil storage--Tank No. 7	8/12/80	1532-1602	Vent	<4	29,500.00	<1.20
		1645-1715		<4	22,900.00	<0.90
	8/13/80	1022-1052		<4	25,400.00	<1.10

[a]Contaminated Tedlar bag.

TABLE C-13. TAR STORAGE

Source location	Date	Sample period	Sample location	Flowrate standard condition (stdft^3/min)	Benzene concentration (ppm)	Benzene emission (lb/h)
Gas Phase[a]						
Wheeling-Pittsburgh Steel, Monessen, PA[9]						
Tar storage--Tank No. 2	8/12/80	1530-1600	Vent	20	1,043.10	0.25
		1710-1740		19	1,658.70	0.39
	8/13/80	1015-1045		25	2,772.20	0.85
CF&I, Pueblo, CO[12]						
Tar storage tank		1415-1445	Vent or tank	300	622.00	2.30
		1520-1550		310	730.00	2.70
		1600-1630		240	539.00	1.60

[a]Standard conditions--saturated at 68° F, 29.92 inHg.

TABLE C-14. WASH-OIL DECANTERS

Source location	Date	Sample period	Sample location	Flowrate standard condition (stdft^3/min)	Benzene concentration (ppm)	Benzene emission (lb/h)
Gas Phase						
U.S. Steel, Fairless Hills, PA[6]	9/10/80	1410-1440	Vent	96	706.00	0.82
		1508-1538		67	1,052.00	0.85
		1555-1625		110	692.00	0.95

TABLE C-15. TAR DECANTERS

Source location	Date	Sample period	Sample location	Flowrate standard condition (stdft^3/min)	Benzene concentration (ppm)	Benzene emission (lb/h)
Gas Phase[a]						
Bethlehem Steel, Burns Harbor, IN[10]						
Tar decanter B	9/23/80	1020-1050	Vent A	58	4,760.00	3.34
		1150-1220		55	3,198.70	2.14
		1407-1437		69	4,701.60	3.94
	9/23/80	1020-1050	Vent B	188	1,819.00	4.14
		1150-1220		197	2,252.20	5.38
		1407-1437		278	2,350.80	7.91
	9/23/80	1020-1050	Vent C	59	850.00	0.61
		1150-1220		56	1,126.10	0.76
		1407-1437		66	1,207.70	0.96
Bethlehem Steel, Bethlehem, PA[11]						
Tar decanter-- No. 5 battery	7/8/80	1453-1523	Vent	170	1,447.20	2.90
	7/9/90	1020-1121		160	717.80	1.40
		1530-1600		150	1,975.00	3.60

[a]Standard condition--saturated at 68° F, 29.92 inHg.

TABLE C-16. LIGHT-OIL CONDENSER VENT

Source location	Date	Sample period	Sample location	Flowrate standard condition (stdft^3/min)	Benzene concentration (ppm)	Benzene emission (lb/h)
Gas Phase						
Bethlehem Steel, Bethlehem, PA[11]	7/11/80	1015-1045	Condenser vent	23	91,900.00	25.30
		1056-1126		23	109,800.00	31.10
		1212-1242		21	53,300.00	--[a]
		1600-1630		22	110,500.00	29.90

[a]Run 3 not included in calculation because of sampling system leak.

TABLE C-17. COOLING TOWERS

Source location	Date	Sample period	Sample location	Temperature (°F)	Benzene concentration (ppm)
			COOLING TOWER--DIRECT-WATER FINAL COOLER		
Liquid phase					
Bethlehem Steel Corporation, Bethlehem, PA[11]	7/10/80	1540	Hot well	86	7.10
		1540		86	6.40
	7/10/80	1545	Cold well	82	3.20
					3.80
U.S. Steel Corporation, Fairless Hills, PA[6]	9/9/80	1410	Cooling tower-- hot well	93	8.20
		1535		96	48.20
		1715		97	48.80
		1410	Cooling tower-- cool well	78	1.00
		1535		78	1.00
		1715		79	0.80
			COOLING TOWER----TAR-BOTTOM FINAL COOLER		
CF&I Steel Corporation, Pueblo CO[12]					
Tar-bottom final cooler	10/7/80	1210	Hot well	96	38.20
				96	51.90
				96	115.10
	10/7/80	1140	Cold well	78	4.10
				78	8.90
				78	9.40

TABLE C-18. TAR DECANTERS

Source location	Date	Sample period	Sample location	Temperature (°F)	Benzene concentration (ppm)
Liquid phase					
Bethlehem Steel Corporation, Bethlehem, PA[11]					
Tar decanter-- no. 5 battery	7/8/80	1525	Flushing liquor on surface	176	5.60
		1600		180	4.20
	7/9/80	1415	Flushing liquor inlet from coke gas cross-over main	--	1.60
				--	
	7/9/80	1545	Inlet to decanter from primary cooler, heavy fraction (tar)	140	1,736.00
					1,888.00
	7/9/80	1545	Light fraction (liquor)	140	16.40
					16.30
Bethlehem Steel Corporation, Burns Harbor, PA[10]					
Tar decanter liquid	9/23/80	1525	Dipped from center hatch (between Vents B and C)	120	181.60
				120	58.10
				120	35.50
	9/23/80	1415	Weir outlet (near Vent C)	178	4,387.00
				178	4,637.00
				178	4,495.00

TABLE C-19. TAR DEHYDRATORS

Source location	Date	Sample period	Sample location	Temperature (°F)	Benzene concentration (ppm)
Liquid phase					
U.S. Steel Corporation, Fairless Hills, PA[6]	9/11/80	1805	West tank--inlet	196	285.00
				196	295.00
				196	251.00
	9/11/80	1820	West tank--dipped from tank	207	629.00
				207	599.00
				207	634.00
	9/11/80	1825	East tank--dipped from tank	219	282.00
				219	286.00
				219	261.00
Bethlehem Steel Corporation, Burns Harbor, IN[10]	9/23/80	1420	Tar dehydrator outlet	162	1,956.00
				162	1,834.00
				162	2,171.00

TABLE C-20. TAR STORAGE TANKS

Source location	Date	Sample period	Sample location	Temperature (°F)	Benzene concentration (ppm)
Liquid phase					
Wheeling-Pittsburg Steel Corporation, Monessen, PA[9]					
Tar storage--type no. 2	8/13/80	1520	Flushing liquor on surface in tank	168	1,580.00
				168	1,672.00
				168	1,565.00
	8/13/80	1455	Inlet to tar tank--from pump	160	1,765.00
				160	2,159.00
				160	1,677.00
CF&I Steel Corporation, Pueblo, CO[12]					
Tar storage tank	10/7/80	1700	Tar storage tank--dipped from top	145	16.80
				145	75.40
				145	6.20

TABLE C-21. WASH-OIL DECANTER

Source location	Date	Sample period	Sample location	Temperature (°F)	Benzene concentration (ppm)
Liquid phase					
U.S. Steel Corporation, Fairless Hills, PA[6]	9/10/80	1640	Wash-oil decanter--dipped from hatchway	205	42.20
				205	40.30
				205	50.30

TABLE C-22. SUMPS

Source location	Date	Sample period	Sample location	Temperature (°F)	Benzene concentration (ppm)
Liquid phase					
Republic Steel Corporation, Gadsden, AL[8]					
Light-oil intercepting sump	10/16/80	1125	West side-inlet	87	25,800.00
		1127	middle	82	27,900.00
		1130	outlet	114	18.00
	10/16/80	1135	East side-inlet	146	97.10
		1137	middle	139	86.70
		1140	outlet	156	1.00
Wheeling-Pittsburgh Steel Corporation, Monessen, PA[9]					
Common-tar sump					
Heavy fraction-Sample 1	8/13/80	1345	Dipped from the sump	150	1,740.00
Sample 2				150	2,020.00
Sample 3				150	1,400.00
Light fraction-Sample 1	8/13/80	1345	Dipped from the sump	150	4.00
Sample 2				150	1.03
Sample 3				150	6.30

TABLE C-23. LIGHT-OIL STORAGE

Source location	Date	Sample period	Sample location	Temperature (°F)	Benzene concentration (ppm)
Liquid phase					
Wheeling-Pittsburgh Steel Corporation, Monessen, PA[9]					
Light-oil storage-- tank no. 7	8/13/80	1505	Light-oil outlet-- from pump	77	680,000.00
				77	750,000.00
				77	670,000.00

TABLE C-24. PAINT FACTORS FOR FIXED-ROOF TANKS

Tank color		Paint factors (F_p)	
		Paint condition	
Roof	Shell	Good	Poor
White	White	1.00	1.15
Aluminum (specular)	White	1.04	1.18
White	Aluminum (specular)	1.16	1.24
Aluminum (specular)	Aluminum (specular)	1.20	1.29
White	Aluminum (diffuse)	1.30	1.38
Aluminum (diffuse)	Aluminum (diffuse)	1.39	1.46
White	Gray	1.30	1.38
Light gray	Light gray	1.33	1.44[a]
Medium gray	Medium gray	1.40	1.58[a]

[a]Estimated from the ratios of the seven preceding paint factors.

TABLE C-25. TANK TYPE, SEAL, AND PAINT FACTORS FOR FLOATING-ROOF TANKS

Tank type	K_t	Seal type	K_s	Paint color of shell and roof	K_p
Welded tank with pan or pontoon roof, single or double seal	0.045	Tight fitting (typical of modern metallic and nonmetallic seals)	1.00	Light gray or aluminum	1.0
				White	0.9
Riveted tank with pontoon roof, double seal	0.11	Loose fitting (typical of seals built prior to 1942)	1.33		
Riveted tank with pontoon roof, single seal	0.13				
Riveted tank with pan roof, double seal	0.13				
Riveted tank with pan roof, single seal	0.14				

TABLE C-26. SCREENING RESULT FREQUENCY DISTRIBUTION BY SOURCE TYPE AND BENZENE SERVICE FOR ALL UNITS

Benzene Service	Screening Value (PPMV)	Flanges		Threaded Fittings		Valves		Pump Seals		Exhausters		Total	
		#	%	#	%	#	%	#	%	#	%	#	%
All Service[a]	0 to 199	223	100.0	70	100.0	226	91.5	18	56.3	27	79.4	564	93.1
	200 to 9,999	0	0.0	0	0.0	13	5.3	5	15.6	4	11.8	22	3.6
	≥ 10,000	0	0.0	0	0.0	8	3.2	9	28.1	3	8.8	20	3.3
	Total Sources Screened	223	100.0	70	100.0	247	100.0	32	100.0	34	100.0	606	100.0
≥ 4% Benzene	0 to 199	66	100.0	59	100.0	117	86.7	6	30.0	4	100.0	252	88.7
	200 to 9,999	0	0.0	0	0.0	10	7.4	5	25.0	0	0.0	15	5.3
	≥ 10,000	0	0.0	0	0.0	8	5.9	9	45.0	0	0.0	17	6.0
	Total Sources Screened	66	100.0	59	100.0	135	100.0	20	100.0	4	100.0	284	100.0
≥ 10% Benzene	0 to 199	66	100.0	59	100.0	117	86.7	6	30.0	0	--	248	88.6
	200 to 9,999	0	0.0	0	0.0	10	7.4	5	25.0	0	--	15	5.4
	≥ 10,000	0	0.0	0	0.0	8	5.9	9	45.0	0	--	17	6.1
	Total Sources Screened	66	100.0	59	100.0	135	100.0	20	100.0	0	100.0	280	100.0

= Number of sources in each category

% = Percent of total sources screened

a All service category includes all sources screened except exhausters, regardless of the percent benzene in the line. No attempt was made to screen all sources with less than 4% benzene, however, so these figures do not represent a complete unit inventory.

TABLE C-37. BENZENE AND NONMETHANE LEAK RATES (kg/day) FROM SAMPLED SOURCES

	Plant[a]	Source ID[b]	Before Tenting OVA Screening Value (ppmv)	Before Tenting TLV Screening Value (ppmv)	Weight Percent Benzene In Line	Benzene Leak Rates			Nonmethane Leak Rates		
						Vapor	Liquid	Total	Vapor	Liquid	Total
Valves	1	18	1500	400	39.00	0.0002	0.0000	0.0002	0.0015	0.0000	0.0015
	2	23	0	No Data	71.50	No Data	3.2639	No Data	No Data	4.7578	No Data
	2	32	70000	8700	71.50	4.7389	0.0000	4.7389	5.1927	0.0000	5.1927
	2	73	2200	500	71.50	0.0102	0.0000	0.0102	0.0162	0.0000	0.0162
	2	121	10000	4200	71.50	0.0028	0.0000	0.0028	0.0100	0.0000	0.0100
	2	122	100001	10001	71.50	0.4868	0.4389	0.9257	0.4929	0.6029	1.0958
	2	123	3600	0	71.50	0.0172	0.0000	0.0172[e]	0.0267	0.0000	0.0267[e]
	2	124	100001	10001	71.50	1.4287	0.0000	1.4287	1.2395	0.0000	1.2395
	2	125	100000	600	71.50	0.0147	0.0000	0.0147[e]	0.0159	0.0000	0.0159[e]
	2	129	10000	800	71.50	0.0742	0.0000	0.0742	0.0701	0.0000	0.0701
	3	40	500	2000	ND[c]	0.0000	0.0000	0.0000	0.0001	0.0000	0.0001
	3	84	50	50	ND	0.0000	0.0000	0.0000	0.0000	0.0000	0.0000
	3	87	600	2600	NA[c]	0.0014	0.0000	0.0014	0.0043	0.0000	0.0043
	3	91	800	1800	ND	0.0260	0.0000	0.0260	0.0339	0.0000	0.0339
	3	103	300	400	NA	0.0015	0.0000	0.0015	0.0029	0.0000	0.0029
	3	104	35	80	NA	0.0032	0.0000	0.0032	0.0050	0.0000	0.0050
	3	108	150	540	63.00	0.0000	0.0000	0.0000	No Data[f]	0.0000	No Data
	3	114	2000	900	63.00	0.0215	0.0000	0.0215	0.0263	0.0000	0.0263
	3	115	350	300	63.00	0.0031	0.0000	0.0031	0.0071	0.0000	0.0071
	3	116	350	200	63.00	0.0000	0.0000	0.0000	0.0034	0.0000	0.0034
	3	120	29000	10001	63.00	0.3511	1.1425	1.4936	No Data	2.0401	No Data
	3	121	5000	2000	63.00	0.0302	0.0000	0.0302	0.0386	0.0000	0.0386
	3	124	65	28	63.00	0.0000	0.0000	0.0000	0.0000	0.0000	0.0000
	3	129	110	100	63.00	0.0001	0.0000	0.0001	0.0005	0.0000	0.0005
	3	139	140	60	63.00	0.0006	0.0000	0.0006	0.0013	0.0000	0.0013
	3	141	30000	10001	63.00	0.2382	0.0000	0.2382	0.3488	0.0000	0.3488
Pump Seals	1	98-I	1000	4200	85.00	0.5953	0.0000	0.5953	0.7093	0.0000	0.7093
	1	98-Ø	45000	10001	85.00	1.6684	1.3995	3.0679	1.7137	1.7860	3.4996
	1	117-Ø	15000	10001	77.00	0.4086	0.0000	0.4086	0.4333	0.0000	0.4333
	1	131-Ø	6000	6500	77.00	1.1581	1.7736	2.9318	1.2764	2.2610	3.5374
	1	139-I	40000	7500	39.00	No Data	6.1584	No Data	1.5555	15.3825	16.9380
	1	139-I[d]	5000	5400	39.00	0.9945	6.1330	7.1275	0.9069	15.3172	16.2241
	1	139-Ø	7000	4000	39.00	No Data	0.0000	No Data	1.0155	0.0000	1.0155
	1	139-Ø[d]	1000	1100	39.00	0.6272	0.0000	0.6272	0.8073	0.0000	0.8073
	1	141-I	500	700	0.97	0.0095	0.0000	0.0095	0.0106	0.0000	0.0106
	2	21-S	50000	8200	71.50	3.1515	0.0000	3.1515	4.0297	0.0000	4.0297
	2	28-S	100001	10001	71.50	1.3240	5.2077	6.5317	1.4234	7.8666	9.2900
	2	119-S	60000	8000	71.50	4.8617	13.1965	18.0582	5.2887	17.2277	22.5164
	2	120-S	24000	10001	71.50	6.8238	27.6367	34.4604	7.9808	36.0792	44.0599

(Continued)

TABLE C-27. (continued)

	Plant	Source ID[b]	Before Tenting OVA Screening Value (ppmv)	Before Tenting TLV Screening Value (ppmv)	Weight Percent Benzene In Line[c]	Benzene Leak Rates Vapor	Benzene Leak Rates Liquid	Benzene Leak Rates Total	Nonmethane Leak Rates Vapor	Nonmethane Leak Rates Liquid	Nonmethane Leak Rates Total
Pump Seals	3	26-I	140	700	ND	0.0257	0.0000	0.0257	0.0354	1.2716	1.3070
	3	27-Ø	25	35	ND	0.0013	0.0000	0.0013	0.0028	0.0000	0.0028
	3	66-I	30	35	ND	0.0081	0.0000	0.0081	0.0111	0.4187	0.4298
	3	68-I	15	14	ND	0.0017	0.0000	0.0017	0.0026	0.1821	0.1848
	3	98-Ø	20000	10001	63.00	0.8473	0.0000	0.8473	No Data	0.0000	No Data
	3	98-Ø[d]	15000	7600	63.00	0.6937	0.0000	0.6937	1.0233	0.0000	1.0233
	3	109-I	6000	8000	63.00	0.8701	0.0000	0.8701	No Data	0.0000	No Data
	3	109-I[d]	15000	8000	63.00	0.7878	0.0000	0.7878	1.2266	0.0000	1.2266
	3	333-Ø	3200	10001	63.00	3.0992	4.4133	7.5125	3.1692	6.8424	10.0115
	3	334-I	75000	10001	63.00	2.2132	96.2911	98.5043	1.8661	149.289	151.155
Exhausters	2	2	2000	1300	3.10	0.0207	0.0000	0.0207	0.1248	0.0000	0.1248
	2	4	500	1100	3.10	0.0082	0.0000	0.0082	0.0598	0.0000	0.0598
	3	18	75000	10001	2.10	2.1791	0.0000	2.1791	5.3717	0.0000	5.3717
	3	19	100001	10001	2.10	1.6867	0.0000	1.6867	4.1286	0.0000	4.1286
	3	20	40000	10001	2.10	1.8928	0.0000	1.8928	No Data	0.0000	No Data
	3	20[d]	65000	10001	2.10	0.2317	0.0000	0.2317	0.5790	0.0000	0.5790
	3	23	15000	10001	2.10	0.0071	0.0000	0.0071	0.0303	0.0000	0.0303

[a] Plant codes are as follows:
1) Wheeling-Pittsburgh Steel
2) Republic Steel
3) Bethlehem Steel

[b] I denotes inboard seal and Ø denotes outboard seal of a pump with two seals. S denotes a single seal pump.

[c] NA= Stream was not sampled and there was not sufficient data to make an estimate.
ND= No benzene detected (Benzene < 1 weight percent).

[d] These sources were sampled twice because problems occurred during initial sampling (leaky ambient air bag, THC not operating).

[e] The benzene analyses and the nonmethane hydrocarbon analyses were performed on two different instruments. The vapor sample for these two sources was approximately 100% benzene, and normal experimental error between the two analyses resulted in the anomalous results of the benzene leak rates being larger than the nonmethane leak rates.

[f] No data = No data was collected because vapor leak stopped before fitting could be sampled, THC was not operating, or sample bag leaked.

TABLE C-28. COMPARISON OF PERCENT BENZENE IN LINE TO PERCENT BENZENE IN EQUIPMENT LEAKS FOR COKE OVEN BY-PRODUCT PLANTS

Equipment Type	Plant[a]	Source ID[b]	Before Tenting Screening Value (ppmv)	Nonmethane Leak Rate (kg/Day)	Weight Percent Benzene In Line[c]	Weight Percent Benzene In Total Leak[d]	Weight Percent Benzene In Vapor Leak[d]	Weight Percent Benzene In Liquid Leak	Other Major Chemicals In Line
Block Valves	1	18	1500	0.00147	39.00 (M)	15.83	15.83	--[e]	Light Oil
	2	23	0	No Data	71.50 (M)	--	--	68.60	Toluene, Xylene
		73	2200	0.01622	71.50 (E)	63.15	63.15	--	Toluene, Xylene
		121	10000	0.00996	71.50 (M)	28.48	28.48	--	Toluene, Xylene
		122	100001	1.09578	71.50 (M)	84.48	98.76	72.80	Toluene, Xylene
		123	3600	0.02665	71.50 (M)	64.38	64.38	--	Toluene, Xylene
		124	100001	1.23947	71.50 (M)	115.26[f]	115.26[f]	--	Toluene, Xylene
		125	100000	0.01590	71.50 (M)	92.21	92.21	--	Toluene, Xylene
		129	10000	0.07013	71.50 (M)	105.78[f]	105.78[f]	--	Toluene, Xylene
	3	40	500	0.00011	(ND) (M)	0.00	0.00	--	Wash Oil
		84	50	0.00000	(ND) (M)	--	--	--	Wash Oil
		87	600	0.00432	(NA)	32.61	32.61	--	Water, Heavy Organics
		91	800	0.03388	(ND) (M)	76.77	76.77	--	Wash Oil
		103	300	0.00286	(NA)	53.57	53.57	--	Water
		104	35	0.00503	(NA)	62.74	62.74	--	Water
		108	160	No Data	63.00 (M)	--	--	--	Toluene, Xylene
		114	2000	0.02634	63.00 (M)	81.62	81.62	--	Toluene, Xylene
		116	350	0.00336	63.00 (M)	0.00	0.00	--	Toluene, Xylene
		120	29000	No Data	63.00 (M)	--	--	56.00	Toluene, Xylene
		124	65	0.00000	63.00 (M)	--	--	--	Toluene, Xylene
		129	170	0.00050	63.00 (M)	20.00	20.00	--	Toluene, Xylene
		139	140	0.00129	63.00 (M)	46.83	46.83	--	Toluene, Xylene
		141	30000	0.34882	63.00 (M)	68.30	68.30	--	Toluene, Xylene
Control Valves	2	32	70000	5.19267	71.50 (M)	91.26	91.26	--	Toluene, Xylene
	3	115	350	0.00714	63.00 (M)	43.65	43.65	--	Toluene, Xylene
		121	5000	0.03857	63.00 (M)	78.30	78.30	--	Toluene, Xylene
On-Line Pump Seals	1	98-I	1000	0.70926	85.00 (M)	83.93	83.93	--	Toluene, Xylene
		98-Ø	45000	3.49964	85.00 (M)	87.66	97.36	78.36	Toluene, Xylene
		117-Ø	15000	0.43330	77.00 (M)	94.30	94.30	--	Toluene, Xylene
		131-Ø	6000	3.53743	77.00 (M)	82.88	90.73	78.44	Toluene, Xylene
		139-I	40000	16.93801	39.00 (M)	--	--	40.04	Wash Oil
		139-I[g]	5000	16.22410	39.00 (M)	43.93	109.66[f]	40.04	Wash Oil
		139-Ø	7000	1.01553	39.00 (M)	--	--	--	Wash Oil
		139-Ø	1000	0.80732	39.00 (M)	77.69	77.69	--	Wash Oil
		141-I	500	0.01057	0.97 (M)	90.02	90.02	--	Wash Oil

(Continued)

TABLE C-28. (continued)

Equipment Type	Plant[a]	Source ID[b]	Before Tenting Screening Value (ppmv)	Nonmethane Leak Rate (kg/Day)	Weight Percent Benzene In Line[c]	Weight Percent Benzene In Total Leak[d]	Weight Percent Benzene In Vapor Leak[d]	Weight Percent Benzene In Liquid Leak	Other Major Chemicals In Line
On-Line Pump Seals	2	21-S	50000	4.02973	71.50 (M)	78.21	78.21	--[e]	Toluene, Xylene
		119-S	60000	22.51639	71.50 (M)	80.20	91.93	76.60	Toluene, Xylene
		120-S	24000	44.05992	71.50 (M)	78.21	85.50	76.60	Toluene, Xylene
	3	26-I	140	1.30700	(ND) (M)	1.97	72.64	0.00	Wash Oil
		27-Ø	25	0.00282	(ND) (M)	46.15	46.15	--	Wash Oil
		66-I	30	0.42978	(ND) (M)	1.87	72.80	0.00	Wash Oil
		68-I	15	0.18475	(ND) (M)	0.90	63.33	0.00	Wash Oil
		98-Ø	20000	No Data	63.00 (M)	--	--	--	Toluene, Xylene
		98-Ø[g]	15000	1.02333	63.00 (M)	67.79	67.79	--	Toluene, Xylene
		109-I	6000	No Data	63.00 (M)	--	--	--	Toluene, Xylene
		109-I[g]	15000	1.22656	63.00 (M)	64.23	64.23	--	Toluene, Xylene
		333-Ø	3200	10.01154	63.00 (M)	75.04	97.79	64.50	Toluene, Xylene
		334-I	75000	151.155	63.00 (M)	65.17	118.60[f]	64.50	Toluene, Xylene
Off-Line Pump Seals	2	28-S	100001	9.29001	71.50 (M)	70.31	93.02	66.20	Toluene, Xylene
Exhausters	2	2	2000	0.12483	3.10 (E)	16.58	16.58	--	Coke Oven Gas
		4	500	0.05975	3.10 (E)	13.76	13.76	--	Coke Oven Gas
	3	18	75000	5.37174	2.10 (E)	40.57	40.57	--	Coke Oven Gas
		19	100001	4.12858	2.10 (E)	40.85	40.85	--	Coke Oven Gas
		20	40000	No Data	2.10 (E)	--	--	--	Coke Oven Gas
		20[g]	65000	0.57896	2.10 (E)	40.02	40.02	--	Coke Oven Gas
		23	15000	0.03030	2.10 (E)	23.28	23.28	--	Coke Oven Gas

[a] Plant codes are as follows:
1) Wheeling-Pittsburgh Steel
2) Republic Steel
3) Bethlehem Steel

[b] I denotes inboard seal and Ø denotes outboard seal of a pump with 2 seals, S denotes a single seal pump.

[c] M = Measured , E = Estimated , NA = Stream was not sampled and there was not sufficient data to make an estimate
ND = No benzene detected, Benzene < 1 weight percent.

[d] Weight percent benzene = $\frac{\text{mass emissions of benzene}}{\text{mass emissions of NMHC}} \times 100$ Where the weight percent benzene in the vapor leak is much less than the weight percent benzene in the line, note that these sources generally have low leak rates and are difficult to sample and analyze accurately.

[e] Insufficient data or no liquid leak present.

[f] Analyses for benzene and NMHC were performed on different instruments - probably almost all of the NMHC in this sample is benzene.

[g] These sources were sampled twice because problems occurred during initial sampling (leaky ambient air bag, THC not operating).

No data = No data collected because vapor leak stopped before fitting could be sampled, THC was not operating, or sample bag leaked.

TABLE C-29. EMISSION FACTORS FOR ALL SOURCES SCREENED ACCORDING TO SOURCE

		NONMETHANE				BENZENE			
				Emission Factor				Emission Factor	
Source Type	Number Screened[1]	Number Emitting[2]	Number Liquid Emitters[3]	Estimate (kg/day/source)	95% Confidence Interval	Number Emitting[2]	Number Liquid Emitters[3]	Estimate (kg/day/source)	95% Confidence Interval
Valves	247	29	3	0.19	(0.02,1.4)	27	3	0.11	(0.01,0.71)
Pump Seals	32	20	11	6.3	(1.3,28)	20	8	2.6	(0.56,11)
Exhausters	34	7	0	0.37	(0.006,10)	7	0	0.087	(0.002,1.4)

[1] Sources were screened using instrument screening and inspection for visible leakage.

[2] Emitting sources were those releasing emissions detectable by the screening method (excluding those sources with measured leak rate of zero).

[3] Liquid emitting sources were those releasing liquid leakage detectable by visual inspection.

TABLE C-30. EMISSION FACTORS FOR SOURCES WITH ≥ 10% BENZENE IN LINE ACCORDING TO SOURCE

		NONMETHANE				BENZENE			
				Emission Factor				Emission Factor	
Source Type	Number Screened[1]	Number Emitting[2]	Number Liquid Emitters[3]	Estimate (kg/day/source)	95% Confidence Interval	Number Emitting[2]	Number Liquid Emitters[3]	Estimate (kg/day/source)	95% Confidence Interval
Valves	135	21	3	0.36	(0.03,3.3)	20	3	0.21	(0.02,1.7)
Pump Seals	20	15	8	5.2	(1.3,18)	15	8	4.0	(1.1,13)

[1] Sources were screened using instrument screening and inspection for visible leakage.

[2] Emitting Sources were those releasing emissions detectable by the screening method (excluding those sources with measured leak rate of zero).

[3] Liquid emitting sources were those releasing liquid leakage detectable by visual inspection.

TABLE C-31. COMPARISON OF LEAK FREQUENCIES FOR VALVES AND PUMPS

Study	Valves, light liquid			Pumps, light liquid		
	Number tested	Percent leaking[a]	95-percent CI[b]	Number tested	Percent leaking[a]	95-percent CI[b]
Refinery[c]	913	11.0	8-14	470	24	19-26
Coke oven by-product[d]	135	5.9	1.8-10	20	45	23-67[e]

[a]Percent with screening values greater than or equal to 10,000 ppmv.

[b]95 percent confidence interval for percent leaking greater than or equal to 10,000 ppm.

[c]Screened with Bacharach TLV Sniffer calibrated with hexane. Reference: Wetherold, R. G., et al. Assessment of Atmospheric Emissions from Petroleum Refining. Volume 3, Appendix B. Prepared for U.S. Environmental Protection Agency, Industrial Environmental Research Laboratory. Research Triangle Park, N.C. Report Number EPA-600/2-80-075c. April 1980. p. 84-124. Docket Number A-79-27-II-A-30.

[d]Screened with OVA-108 and Bacharach TLV Sniffer. Calibration gas was not stated. Reference: Benzene Fugitive Leaks - Coke Oven By-Product Plants: Leak Frequency and Emission Factors for Fitting in Coke Oven By-Product Plants. U.S. EPA, Emission Standards and Engineering Division, Emission Measurement Branch, Research Triangle Park, N.C. Report Number EMB-81-BYC-12. January 1982, p. 7.

[e]95-percent confidence intervals estimated as two standard deviations.

TABLE C-32. COMPARISON OF EMISSION FACTORS (kg/day) FROM SOURCES IN COKE BY-PRODUCT PLANTS AND REFINERIES

Source Type	Coke By-Product Plants		Refineries	
	Emission Factor (Confidence Interval)	Service	Emission Factor (Confidence Interval)	Service
Valves	0.36 (0.03 - 3.3)	> 10% Benzene	0.26 (0.19 - 0.39)	Light Liquid
Pump Seals	5.2 (1.3 - 18)	> 10% Benzene	2.7 (1.7 - 4.0)	Light Liquid
Exhausters (Compressors)	0.37 (0.006 - 10)	All	1.2 (0.54 - 2.5)	Hydrogen
Connections	---	---	0.007 (0.002 - 0.027)	All

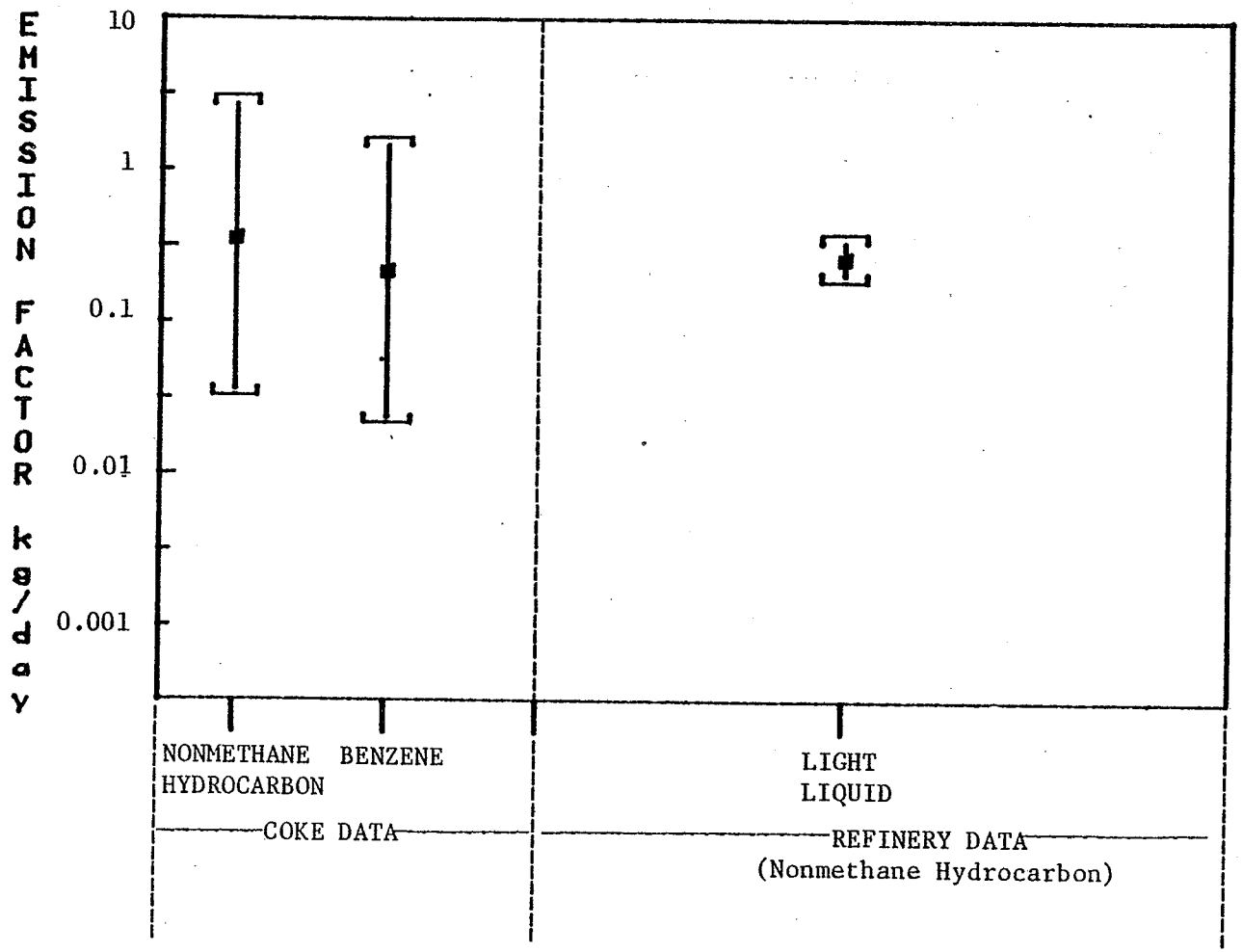

Bracketed intervals are 95% confidence intervals.

Figure C-1. Emission factor comparison—coke (sources with ⩾ 10% benzene service) and refinery (light liquid)—values.)

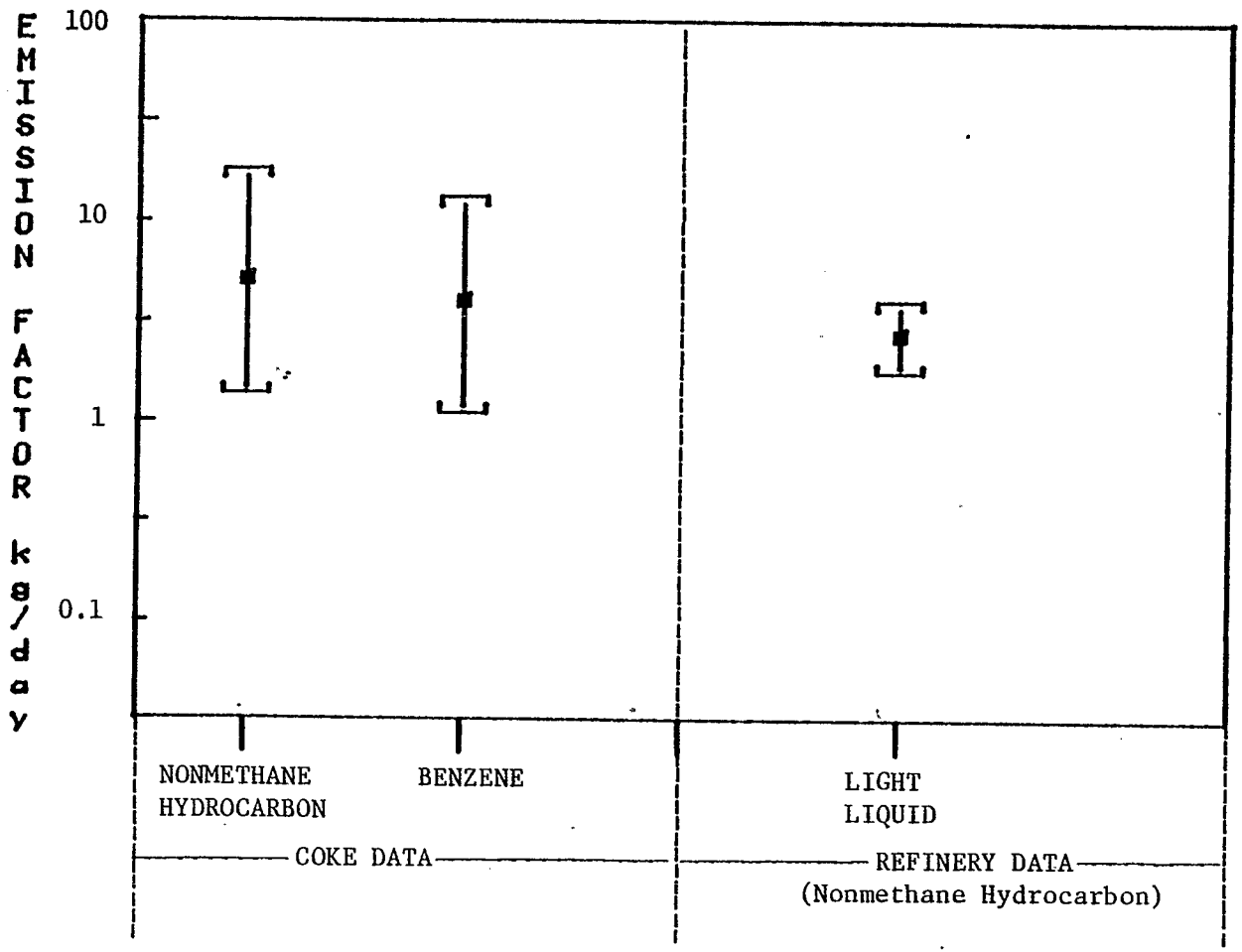

Bracketed intervals are 95% confidence intervals.

Figure C-2. Emission factor comparison—coke (sources with ⩾ 10% benzene service) and refinery (light liquid)—pump seals.

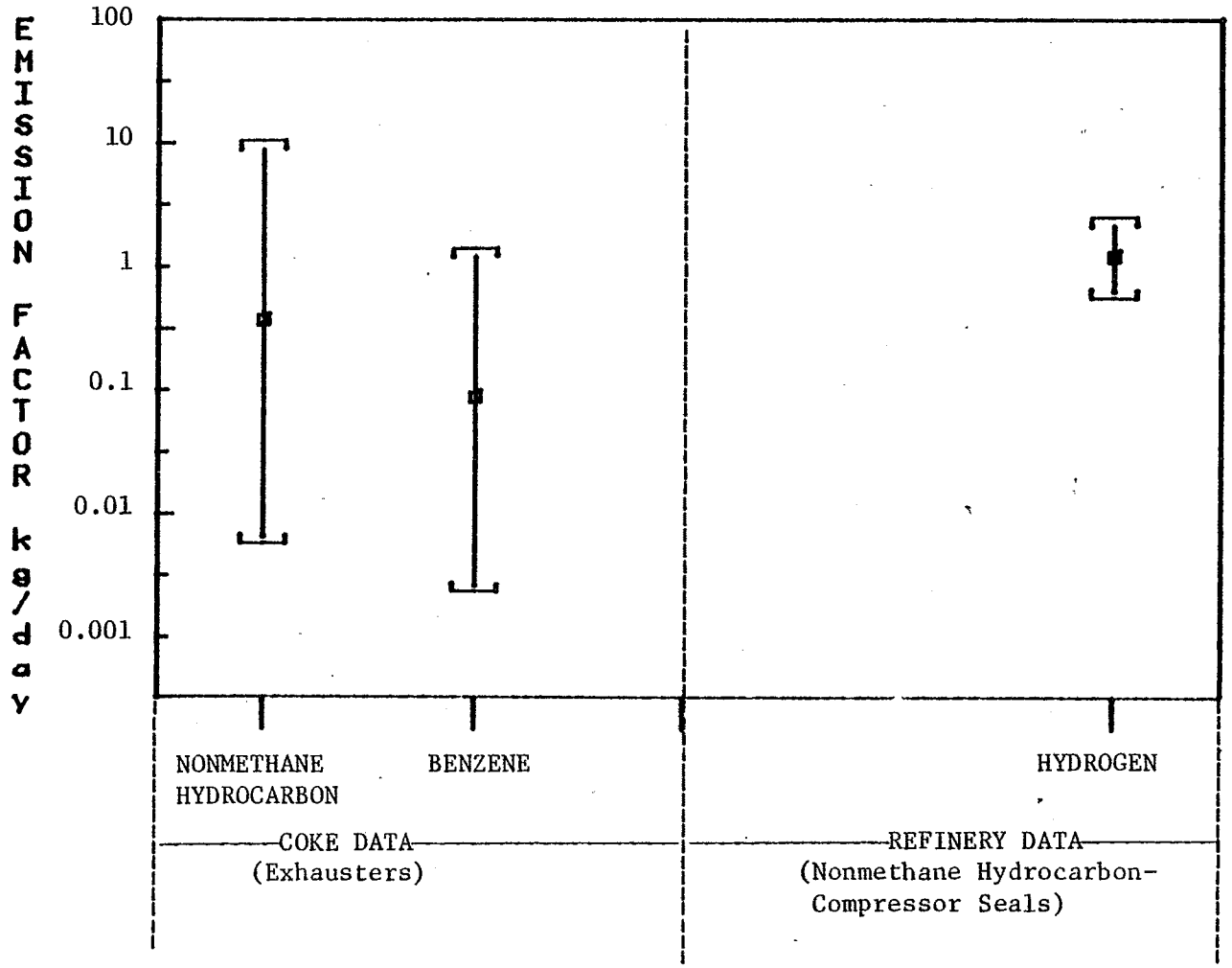

Bracketed intervals are 95% confidence intervals.

Figure C-3. Emission factor comparison—coke (exhausters) and refinery (compressor seals).

APPENDIX D

EMISSION MEASUREMENTS AND CONTINUOUS MONITORING

APPENDIX D

EMISSION MEASUREMENTS AND CONTINUOUS MONITORING

D.1 INTRODUCTION

Appendix D is divided into two sections, the first dealing with fugitive benzene process emissions and the second covering fugitive benzene leaks.

For purposes of this study, the difference between fugitive process emissions and fugitive leaks is that process emissions originate from sources normally vented to or open to the atmosphere, whereas a fugitive leak is an accidental escape from normal confinement due to improper equipment or maintenance. For example, the process emission study covered such sources as storage tanks, sumps, cooling towers, and material-handling processes; the fugitive leak survey included pumps, valves, and flanges located throughout the by-product plant.

Subsections D.2 through D.4 cover the fugitive process emission study and Subsections D.5 through D.8 cover the fugitive leak survey.

D.2 EMISSION MEASUREMENT METHODS FOR FUGITIVE PROCESS EMISSIONS

During the standard support study for fugitive benzene process emissions from coke oven by-product plants, the U.S. Environmental Protection Agency (EPA) conducted emission tests at seven facilities. A total of 21 sources were tested: 14 for source benzene emissions, 5 for fugitive benzene emissions, and 2 for benzo-a-pyrene (BaP).

Source benzene emissions were measured through a modified EPA Method 110 procedure developed in the field for application to this test program. Fugitive benzene emissions were measured using a tracer gas to model and estimate benzene emissions from unconfined sources. BaP was sampled through a draft EPA method. The procedures used for these three test methods are described below.

D.2.1 Determination of Benzene from Stationary Sources: EPA Method 110 and Modifications

EPA Method 110 consists of drawing a time-integrated stack gas sample through a probe into a Tedlar* sample bag, which is enclosed in a leak-free drum, by use of a pump hooked to the drum outlet that slowly evacuates the drum, causing the bag to fill.

The method was modified because it did not account for moisture in the sample stream and is only designed to measure benzene concentration, not mass emission rate. The following modifications were made to all tests done using Method 110:

1. Velocity and temperature readings were taken at the top of the stack at 5-minute intervals during the 30-minute sampling runs to obtain mass emission rates. This information was used to calculate flow rate, which was used in conjunction with benzene concentration to yield mass emission rate. Velocity readings were made by using a vane anemometer with direct electronic readout.

2. A personnel sampling pump was substituted for the pump, needle valve, and flow meter of the method. The personnel pumps have built-in flow meters and rate adjustment screws and have the further advantage of being intrinsically safe, as required in many areas of the coke plant.

3. Swagelok fittings were used in place of quick connects.

4. Instead of being discarded, Teflon sample lines after each set of samples were washed with propylene carbonate and/or acetone and flushed with nitrogen before reuse.

5. An orifice and megnehelic gauge were inserted in the sampling line before the Tedlar bag to indicate that air flow was reaching the bag.

6. A water knockout trap was inserted between the probe and magnehelic gauge to collect any condensate in the sample line.

---

*Mention of trade names or specific products does not constitute endorsement by the U.S. Environmental Protection Agency.

7. The following cleanup procedures were followed:

If any condensate were collected in the trap or sample line, it was measured and saved for analysis. The probe, line, and trap were then washed with propylene carbonate, which was also saved for analysis. Any benzene found in these washed and water catches was added to the total found in the sample bag to determine mass emission rates.

Bag volumes were measured whenever water was collected in the trap by emptying the bag through a dry gas meter after the sample was analyzed. The volume of water collected in the trap was then converted to an equivalent air volume and was added to the volume in the bag to determine the percent moisture in the sample stream.

After the probe, line, and trap washes were completed, the lines were washed with acetone to remove the propylene carbonate film and flushed with nitrogen to dry.

Figure D-1 shows the modified Method 110 setup.

In some cases the probe plugged with naphthalene, resulting in no sample collection. This occurred on the naphthalene-drying tank and on two tar dehydrators. The solution to this problem was to use a large diameter glass probe in place of the stainless steel tubing and to pass the sample stream through propylene carbonate to knock out the naphthalene. As shown in Figure D-2, the knockout train consists of three impingers, the first two each containing 100 mℓ of propylene carbonate, and the third empty. After the naphthalene was scrubbed out, the sample stream passed through Teflon tubing and on into the sampling drum as usual. Cleanup consisted of saving the impinger catches and washes in addition to the sample line and water trap washes for analysis of benzene.

D.2.2 Fugitive Benzene Sources: Tracer Gas Method

The tracer gas method is a practical procedure for quantifying mass emissions of volatile organics from sources essentially open to the atmosphere without disturbing flow or dispersion patterns of the source operation. This method uses the release of a tracer gas directly over the source of interest; the tracer gas will then follow the same dispersion patterns as will emissions from the source. The mass of

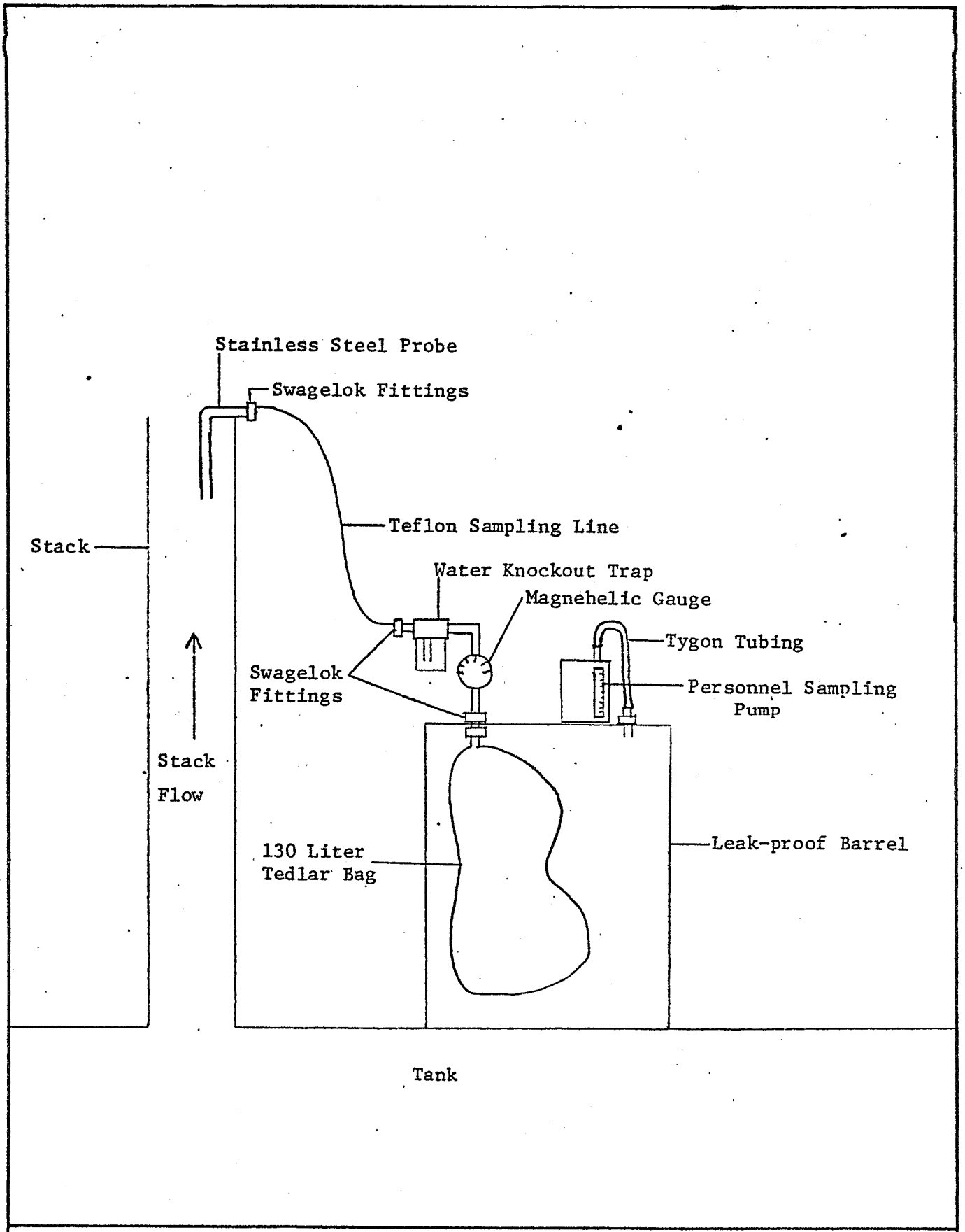

FIGURE D-1
MODIFIED METHOD 110 SAMPLING TRAIN

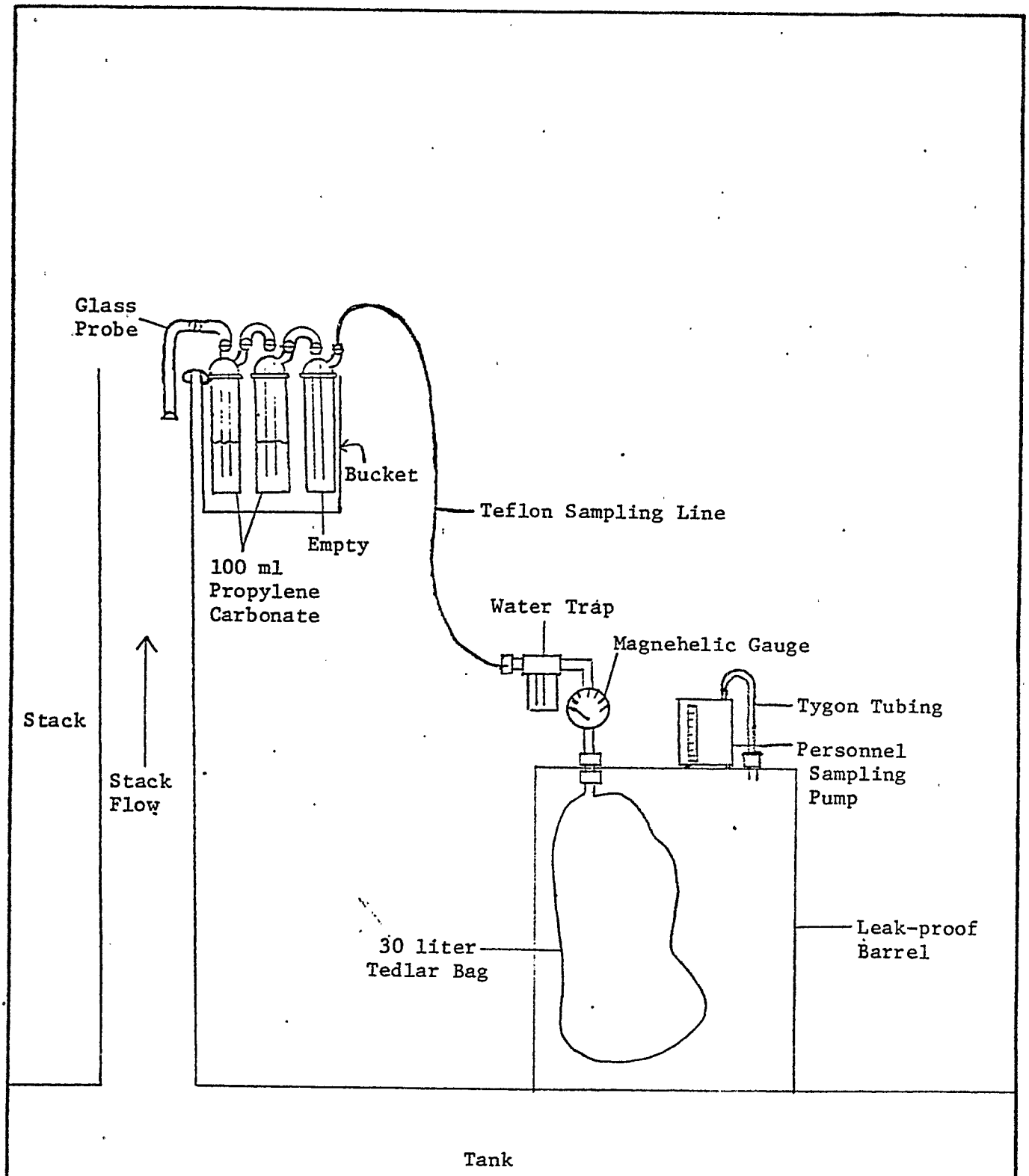

FIGURE D-2 MODIFIED METHOD 110 SAMPLING TRAIN WITH PROPYLENE CARBONATE KNOCKOUT TRAP

tracer released over the sampling period is known and the mass-to-mass ratio of the benzene to the tracer gas in the collected samples is determined by gas chromatography. The benzene emission rate can be calculated with this information.

The method is based on the principle that the chosen tracer gas will model the dispersion of benzene from the source. The tracer gas chosen for this project was isobutane because it was not present in the sources to be tested and could be separated readily from other source trace components by the same column used for benzene. In addition, isobutane is a nontoxic gas that can be readily dispensed from a pressurized cylinder at a uniform measured rate.

D.2.2.1 Sampling Strategy. The program for a sampling run generally involved collection of triplicate downwind samples and a single-point upwind sample. Prior to testing, grab samples were collected in glass flasks and analyzed to determine benzene concentration in the vicinity of the source to be tested. This information was correlated with wind speed and direction to choose the exact sampler locations. Ideally, downwind samplers would be equidistant from the source and along approximately a 30° arc.

Two sets of samples were integrated over consecutive half-hour periods and together constituted a single test. Samples were collected by Environmental Measurements Air Quality Assurance II sampling systems into clean 10-liter Tedlar bags. The Air Quality Assurance II samplers are self-contained units capable of collecting one or more integrated samples at a preset rate. For tracer tests the sampling rate used 10 ℓ/h. Tedlar bags to be reused for sampling were flushed three times with nitrogen and allowed to sit overnight three-quarters full. Prior to their next use, each was analyzed for benzene content.

The tracer gas dispersion apparatus was positioned over the source to be tested as near as possible to the actual emissions. Ideally, the dispersion tube or support member spanned the the emission source at its center. After being collected, the tracer gas samples were transported immediately to the gas chromatograph and analyzed. The elapsed time between sample collection and analysis never exceeded

1 hour. Some of the samples were retained for 24 hours and reanalyzed to verify that there was no sample degradation in samples of this type. The loss of benzene and isobutane observed was typically less than 5 percent.

D.2.2.2 Dispersion Apparatus. The apparatus for the dispersion of trace gas consists of a cylinder of the tracer gas connected to a dry gas meter, a rotameter, and a dispersion tube. All necessary connecting lines are Teflon. The dispersion tube was 8 feet long in two 4-foot sections connected via a T-joint to each other and to the tracer gas source. The tube was constructed of 1/4-inch O.D. stainless steel tubing with 0.041-inch holes every 19 inches. The ends of the tube were capped.

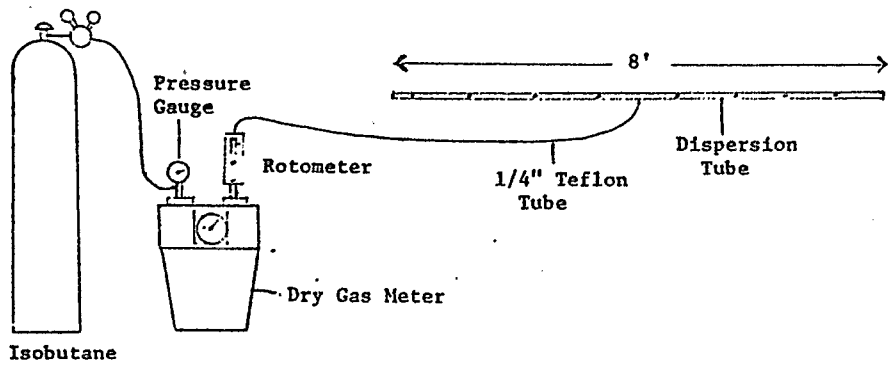

D.2.2.3 Method Development.

D.2.2.3.1 Tracer gas selection. The initial consideration with the tracer gas method is the selection of a suitable gas for which several criteria are used. First, the tracer gas must not be present in the atmosphere at the sampling location. Second, the tracer gas must be separable from other components in the background at the sampling location and quantifiable on the same gas chromatograph (GC) column without interfering with the elution of the compound(s) of primary interest. The tracer gas should also be readily available, transportable, economically feasible, and safe for any given usage.

Isobutane is the recommended tracer gas to determine benzene emissions at coke oven by-product plants. The second choice for a tracer gas is a halogenated hydrocarbon. At coke oven by-product plants, the hydrocarbons in the background atmosphere are almost

exclusively emissions from the coking operation, and neither isobutane nor halogenated hydrocarbons are present to any significant degree. Isobutane was chosen over a halogenated hydrocarbon on the basis of chromatographic elution characteristics. Isobutane elutes well before the benzene peak, thus eliminating any interference when a temperature program is used for the chromatographic analysis.

Separation of isobutane from mixtures containing hydrocarbon concentrations typical of coke oven by-product plants was verified when samples collected at different sources in a coke oven by-product plant were spiked with various concentrations of isobutane and a temperature program of chromatographic analysis was conducted to achieve the desired separation. In all cases, the desired separation was achieved.

D.2.2.3.2 Dispersion tube configuration. Two different dispersion tube configurations were tested, both constructed from 1/4-inch O.D. stainless steel tubing. The first tube tested was 8 feet long with the tracer source connected to one end of the tube. The tube contained holes every 19 inches that were progressively larger moving away from the gas source, ranging from 0.062 inch to 0.031 inch. The second tube was 8 feet long in two 4-foot sections that were connected via a T-joint to each other and to the tracer gas source. This dispersion tube had 0.041-inch holes every 19 inches and the ends were capped.

Of the two types of dispersion tubes tested, the latter described was more efficient for the dispersion of the tracer. This judgment was made by visual inspection of the holes in each tube while isobutane was flowing at 0.1 ft^3/m. At this rate, isobutane can be seen as it leaves the dispersion tube, and differences in the relative volume leaving each hole are visually discernible. The first configuration had all gas coming out of the first two holes, whereas the second configuration had uniform emissions from each orifice.

D.2.2.3.3 Method verification. To check the validity of the tracer gas method, a series of experiments was run in which known amounts of benzene and isobutane were released simultaneously, and the ratio of the two was checked against the downwind sample concentration ratio.

Samples were collected along a 30° arc, 25 feet downwind from the emission source.

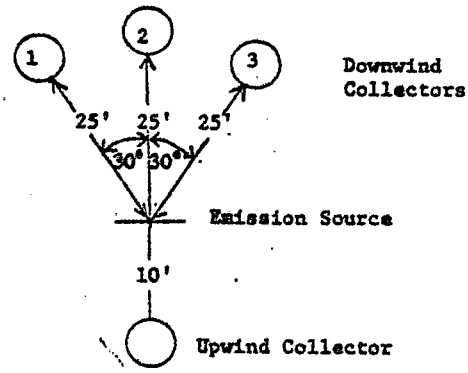

Initially, samples were grab samples collected in clean 1-liter glass gas flasks. Later samples were integrated over a 1/2-hour period and collected in clean 10-liter Tedlar bags via Emissions Measurements Air Quality Sampler with a flow rate of 10 ℓ/hr.

Two methods were tried for releasing benzene--direct evaporation, and through a heated bubbler. Both methods proved adequate for experimental determinations. When evaporation was used to release benzene, a stainless steel pan 16 inches × 24 inches × 1/2 inches was employed to contain the benzene. During an experimental determination, benzene was added to the pan in 50-cm^3 aliquots at intervals frequent enough to maintain a constant surface area of benzene in order to keep the benzene emissions constant. However, this evaporation method proved unsatisfactory on days when the wind speed exceeded 15 to 20 mph due to the changing evaporation rate resulting from gusting wind. A more steady benzene emission was achieved by using a heated bubbler. The bubbler system consisted of a 500-cm^3 impinger of the Greenburg-Smith design wrapped with a heat tape. The impinger was kept at a constant temperature below the boiling point of benzene. A rubber disphragm pump was used to push atmospheric air through a bubbler and flow was regulated with a rotameter.

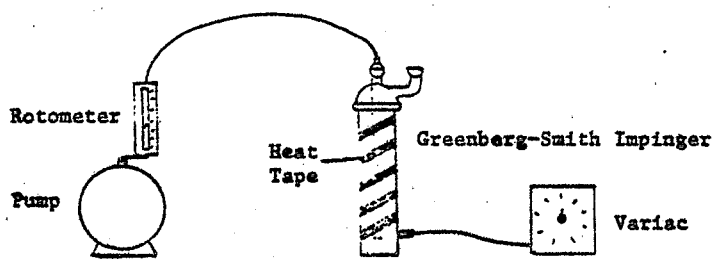

It was necessary to add more benzene during an experimental run, because the emission rate drops substantially if the benzene level drops too low in the impinger. The frequency of addition and the quantity of benzene per addition depend on the emission rate used. For these determinations, it was necessary to add 50 cm^3 of benzene at approximately 10-minute intervals.

In initial determinations, portions of actual presurvey samples containing 62 percent benzene were released to simulate the type of sample that would be encountered in the field. Various amounts of the sample mixture from 0.20 to 10 cm^3 were released, and samples were collected downwind in 1-liter gas flasks. When these samples were analyzed, the amount of benzene detected was very small, approximately 20 ppb. It was apparent that it would be necessary to release significantly more benzene to produce the necessary concentration at the sampling location so that quantitative mass-to-mass ratios could be calculated.

Because of the necessity of releasing more benzene and avoiding the foul odor the high-concentration benzene field samples possessed, it was decided that pure benzene would be used for all subsequent determinations.

For the next series of experiments evaporation as previously described was used to release benzene. This series of experiments

produced results accurate to within 10 percent of the theoretical mass-to-mass ratios with a minimum benzene emission of 0.54 lb/hr for the series. These experiments were performed on days when wind speed was light (5 to 10 mph) and wind direction was steady (see Table D-1).

The next experiment was designed to test variations that might be introduced when wind speed was 20 to 25 mph and direction was 180° variable due to a changing weather system. The benzene evaporation rate was affected noticeably by conditions as were emission dispersion patterns. Erratic results were produced by the meteorological stress on key experimental variables. Calculated mass-to-mass ratios differed from the theoretical value by as much as 15 to 56 percent, demonstrating the effect of high and variable winds on the technique. The benzene bubbler as described was used to provide a steady source of benzene emissions at a rate independent of meteorological conditions in order to reduce stress on the experiment. On the day chosen to use the bubbler system, wind speed was 15 to 20 mph and direction was steady. Favorable results were obtained despite the relatively strong wind, demonstrating that the tracer technique is valid in winds up to 20 mph depending on the sampling location (see Table D-1).

D.2.2.3.4 Conclusions. When the tracer gas method is used, it is necessary to verify that the tracer gas is detectable at the chosen sampling location because the method depends somewhat upon meteorological conditions. The method works best when wind speed is light to moderate, 5 to 15 mph, and wind direction is steady. When wind speed exceeds approximately 20 mph or if there is no wind and/or the wind direction is too variable, dispersion patterns conducive to accurate sampling are disturbed and quantitative mass-to-mass relationships are difficult to establish. The upper limit of stress with respect to meteorological conditions can be examined by the spread of mass-to-mass ratios for each individual sample for a given sampling run. If the calculated ratios are inconsistent or the deviation between each calculated ratio and the mean is greater than 20 percent, it would be necessary to seek an explanation based on process variations or meteorological conditions or to void the sampling run and possibly suspend sampling until conditions are more favorable.

TABLE D-1. EXPERIMENTAL DATA

Release rate (g/min)	Benzene release method	Sample type	Wind speed	Wind direction	Theoretical ($T\phi/ic_4$)	ϕ/ic_4 (#1)	ϕ/ic_4 (#2)	ϕ/ic_4 (#3)	Average
ϕ 0.027 ic_4 5.26	Evaporation	Grab	0-5 mph	Steady	0.005	*NO	NO	NO	--
ϕ 0.993 ic_4 8.27	Evaporation	Grab	0-5 mph	Steady	0.120	*NO	NO	NO	--
ϕ 4.05 ic_4 7.16	Evaporation	Grab	0-5 mph	Steady	0.57	0.64	0.64	0.65	0.645
ϕ 9.40 ic_4 6.38	Evaporation	Integrated	5-10 mph	Steady	1.47	1.57	1.43	--	1.50
ϕ 10.85 ic_4 13.59	Evaporation	Integrated	20-25 mph	Variable	0.80	1.29	1.82	0.94	1.35
ϕ 9.40 ic_4 8.25	Bubbler	Integrated	15-20 mph	Steady	1.14	1.40	0.93	1.02	1.12
ϕ 6.33 ic_4 6.48	Bubbler	Integrated	0-5 mph	Steady	0.91	0.97	0.96	0.96	0.96
ϕ 6.48 ic_4 6.48	Bubbler	Integrated	0-5 mph	Steady	1.00	0.91	0.86	0.89	0.89

ϕ - Benzene.

ic_4 - Isobutane.

*No benzene; only isobutane detected.

D.2.3 Determination of BaP from Stationary Sources

An EPA draft method was used for sampling BaP. The method basically consists of an EPA Method 5 sampling train modified to include an adsorbent sample tube packed with XAD resin located between the heated filter and the impinger train. The adsorbent sample tube was maintained at a temperature of 53° C ± 2° C (127° F ± 4°). Figure D-3 shows a schematic of the BaP sampling train.

The solvent used for washing the impingers and sample train glassware was tetrahydrofuran (THF). THF was also used in the laboratory to extract BaP from the filter and resin.

The purpose of the resin was to absorb any BaP that might pass through the filter, although the results were inconclusive about the effectiveness of the filter/resin system. In the runs on the pitch prilling tank, less than 15 percent of the total BaP was collected on the filter and in the front-half washings, whereas in the pitch storage tank runs almost 69 percent of the total BaP was collected on the filter.

Modifications to the draft method included the use of THF as the extraction and wash solvent in place of methylene chloride and substitution of gas chromatography for fluorescence spectrophotometry in the analytical method.

D.3 PERFORMANCE TEST METHODS FOR FUGITIVE PROCESS EMISSIONS

The control technology considered for regulating benzene emissions from coke by-product recovery plants includes equipment standards that would totally eliminate point source emissions. Consequently, no performance test methods would be applicable.

For confined sources vented to the atmosphere through a stack, EPA Method 110 is recommended for benzene. Concurrently with Method 110, stack gas velocity and temperature should be monitored to calculate a mass emission rate from the process. Due to the low velocity encountered in many process vents, it is recommended that stack velocity be measured with a vane anemometer. Additionally, many process vents are not equipped with sampling prots and sampling must be conducted from the top opening of the vent. For high-moisture gas

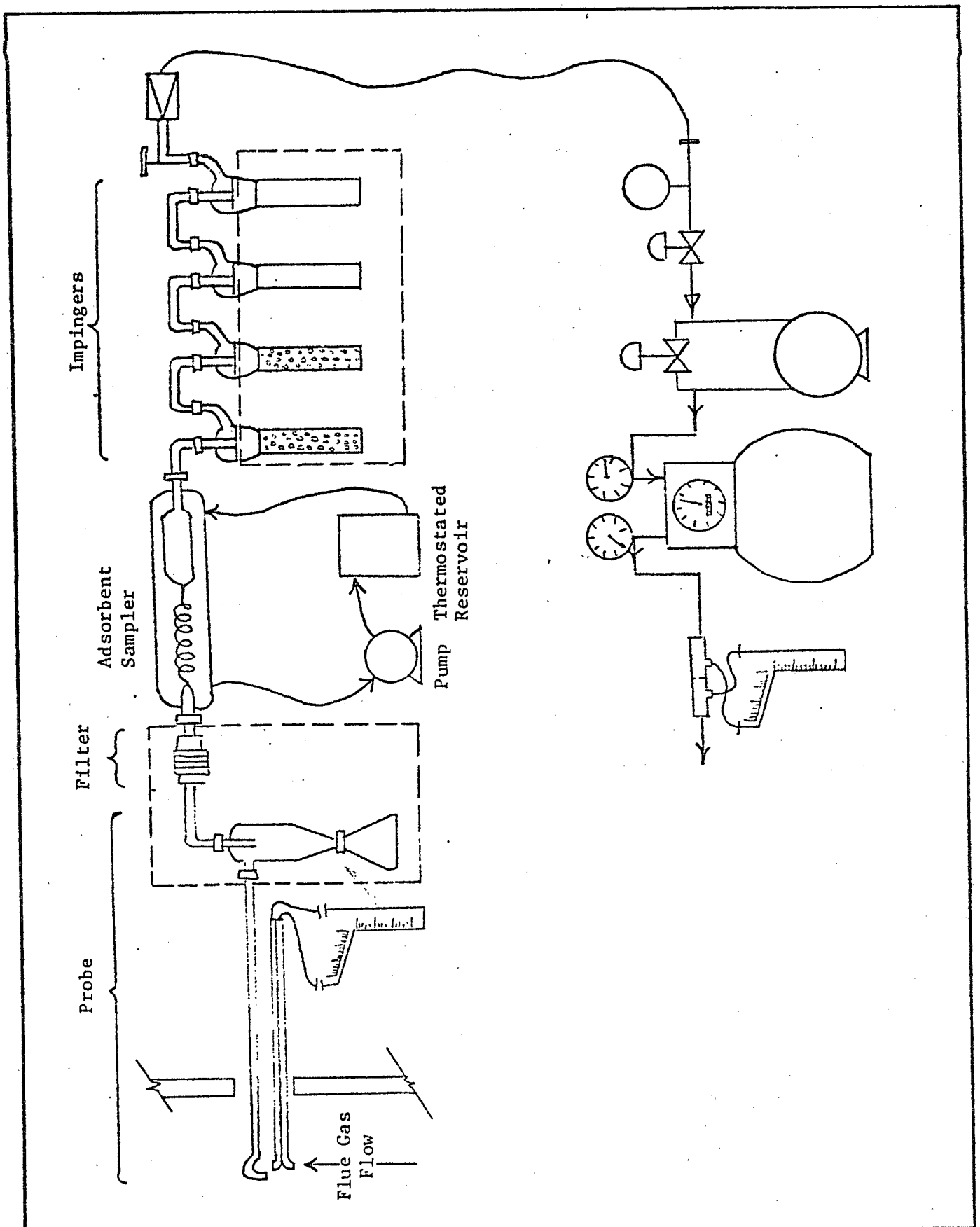

FIGURE D-3 BaP SAMPLING TRAIN

streams, a water knockout trap is recommended to prevent the moisture from condensing in the sample bag. Any moisture collected in the trap must be analyzed subsequently for benzene to determine total emissions from the test run.

The cost for three 1-hour Method 110 test runs would be approximately $2,000. If the plant has in-house sampling capabilities, the cost could be less.

For fugitive process emissions from sumps or other open sources, a standardized method of known precision and accuracy that would apply to all similar sources is not practicable due to technological and economic limitations. Therefore, no performance test methods would be applicable for such a process.

D.4 CONTINUOUS MONITORING FOR FUGITIVE PROCESS EMISSIONS

No emission monitoring instrumentation, data acquisition, and data processing equipment specifically installed to measure benzene emissions in atmospheric vents at coke by-product recovery plants has been determined to date. However, commercial systems are available that incorporate automated GC with flame ionization detection (FID) and are equipped with automatic data processing systems. With selection of the proper separation column and operating cycle time, this type of system could feasibly be used to monitor benzene emissions, although EPA has not yet developed performance specifications for benzene emission monitors.

It is estimated that the installed capital cost of an emission monitoring system would range from $30,000 to $50,000 depending on the system chosen and the installation difficulty encountered. The annual operating cost is estimated to be between $8,000 to $10,000 per year.

D.5 EMISSION MEASUREMENT METHODS FOR FUGITIVE LEAKS

To provide data in support of standards for the control of fugitive benzene leaks and other nonmethane hydrocarbon emissions from coke oven by-product recovery units in steel mills, emission factors for valves, flanges, pump seals, and exhauster seals were developed from a determination of the frequency of leak occurrences from these sources and from measurements of their emission rates. EPA conducted test

programs at three coke by-product plants[1] to screen sources in every type of service, to measure the emission rate from sources found leaking, and to analyze emissions for total nonmethane hydrocarbons (NMHC's) and for benzene concentration.

Proposed Reference Method 21[2] was used to determine whether or not a leak was present at each source and to estimate the leak rate. All potential fugitive sources were tested for leaks by this "screening" procedure, which also provided a count of the frequency of leaks from the different types of source (i.e., valves, flanges, pumps, and exhausters) and for each service (i.e., liquid or vapor).

For sources found to be leaking, the mass emission rate was determined by enclosing the source temporarily in plastic through a bagging technique. A vacuum flow technique was used to establish a known flow rate of air through the bag, and the concentration of NMHC's and benzene in the air stream was analyzed by means of a total hydrocarbon analyzer (THC) or a GC equipped with an FID.

From the screening data and measured emission rates, it was possible to develop correlations to predict, within confidence intervals, the mean vapor leak rate from a given source type based on its screening value. These correlations permitted the calculation of emission factors for NMHC's and benzene vapor and for total (vapor and liquid) emissions from valves, flanges, and pump and exhauster seals at coke by-product plants.

D.5.1 Leak Detection Method

Proposed Reference Method 21,[2] which describes procedures for using a portable instrument to determine VOC leaks, was developed during earlier test programs to develop data on fugitive emissions from petroleum refineries[3] and synthetic organic chemical manufacturing industry (SOCMI) plants.[4] Reference Method 21 was considered applicable for this program because of the similarity of the fugitive leak sources and the range of vapor pressures of the chemical gaseous and liquid streams present in coke oven by-product processing plants. In the initial refinery programs, the instrument used to monitor for fugitive leaks was a J. W. Bacharach "TLV Sniffer," which uses a catalytic oxidation detector. More recently, a Century Systems Organic Vapor

Analyzer (OVA) Model 108, which uses an FID, has been used. The TLV Sniffer was necessary to relate the data base of the current program with the much larger data base from the refinery and SOCMI programs. The initial screening measurements of all potential fugitive emission sources were performed only with the OVA. Then, just prior to and immediately after the emission rate was measured from leaking sources, screening values were obtained with both the OVA and the TLV Sniffer.

Hexane gas at 2,000 ppmv was used to calibrate the TLV Sniffer in the refinery studies and was used again in this program for the TLV Sniffer calibration. Methane standard gas mixtures are recommended for use with the OVA.

It was recognized that coke by-product units have a number of potential vapor components and compositions to which all analyzer types do not respond equally. The alternative of specifying a different calibration material for each stream type and normalization factors for each instrument type was not investigated. Because at least four instrument types are available that might be used in this procedure, and a large number of potential stream compositions are possible, the amount of prior knowledge necessary to develop and subsequently use such factors would make the interpretation of results prohibitively complicated. Based on EPA test results in the SOCMI program,[4] the number of concentration measurements in the range where a variability of two or three would change the decision as to whether or not a leak exists was small compared to the total number of potential leak sources.

D.5.2 Emission Rate

D.5.2.1 Sampling. Prior to the first test, available methods for measuring fugitive leaks were reviewed, with emphasis on methods that would provide data on emission rates from each source. Each individual piece of equipment must be enclosed in a temporary cover for emission containment to measure emission rates. After containment, the leak rate can be determined by using concentration change and flow measurements. This procedure has been used in several studies[3 5] and has been demonstrated feasible to develop screening value-emission rate correlations and emission factors. However, direct measurement of emission rates from leaks is a time-consuming and expensive procedure

requiring about $40 for materials and equipment and 2 person-hours per source[6] and is not feasible or practical for routine testing because of the large number of sources within each process unit. There can be more than 100 valves in light liquid and gas service in a process unit.

To measure the leak rate accurately for any given fitting, the fitting was isolated from the ambient air by an enclosure (or tent) of Mylar plastic (polyethylene terephthalate) that may range in thickness from 1.5 to 15 mils. Mylar is well suited to this function because it does not absorb significant amounts of hydrocarbons, is very tough, and has a high melting point (250° C). The enclosures were kept small to provide a more effective seal, to minimize the time required to reach steady-state conditions, and to minimize or prevent condensation of heavy hydrocarbons inside the enclosure by reducing residence time and surface area available for heat transfer.

The tent was connected to a sampling train, dry gas meter, and vacuum pump as indicated in Figure D-4 to permit a measured flow of air to pass through the enclosure. If the enclosure were so air tight that a significant vacuum existed, a hole was made in the tent on the opposite side from the outlet. Sample bags of 2-mil Tedlar plastic were used to collect gas samples and transport them to a mobile laboratory for analyses. The cold trap was placed close to the tent to condense water and heavy organics, thus preventing condensation in downstream lines and equipment. Any organic condensate that collected in the cold trap was measured for later use in calculating total leak rates. The use of such a cold trap was critical; without it, order of magnitude errors were possible.

The flow rate through the system was throttled with a control valve immediately upstream of the vacuum pump when necessary to avoid operations with an explosive mixture of hydrocarbon in the air.

The sample procedure was accomplished in the following steps:

- Obtain screening values with the OVA and TLV Sniffer.
- Enclose the fitting in a tight Mylar shroud.

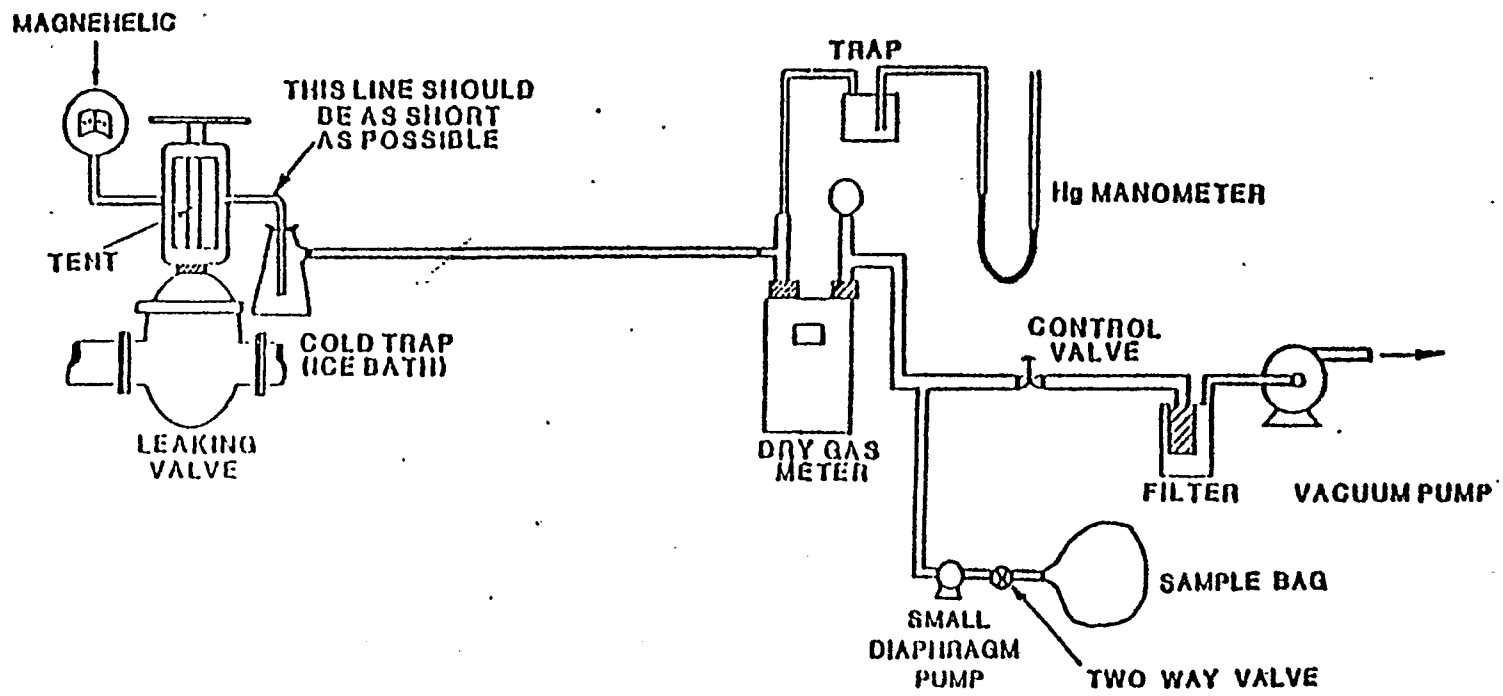

Figure D-4 - Sampling Train for Baggable Sources of Hydrocarbon Emissions Using a Diaphragm Sampling Pump

- Connect the sampling train to the "tent."
- Immerse the cold trap in an ice bath.
- Note the initial reading of the dry gas meter.
- Start the vacuum pump and a stopwatch simultaneously.
- Record the temperature and pressure at the dry gas meter.
- Observe the volatile organic compound (VOC) concentration with the OVA at the vacuum pump exhaust.
- Record the temperature, pressure, dry gas meter reading, outlet VOC concentration, and elapsed time every 2 to 5 minutes.
- When the outlet VOC concentration stabilized, the system was at steady-state condition. Fill a gas sample bag from the discharge of the Teflon-lined diaphragm pump.
- Fill another bag with ambient air near the tent area to measure the background VOC concentration.
- Take a final set of readings and stop the vacuum pump.
- Remove the cold trap, seal it, and transport it to the laboratory along with the two bag samples and the data sheet.
- Remove tent.
- Rescreen source with the OVA and TLV Sniffer.

D.5.2.2 Chromatographic Analysis. The concentration of total hydrocarbon and of benzene was determined through gas chromatographic procedures to quantitate the VOC emissions from the bagged sources.

Primary analysis of VOC's was performed on a Byron 301C THC as was done in an earlier study.[7] Because of an upper limit of 20,000 ppmv to quantitate VOC samples on this instrument, when necessary, dilutions of the relevant samples were made with a 1.5-liter gas-tight syringe.

Methane calibrations were carried out daily on the THC with an 8,000-ppmv methane/air tank standard. NMHC calibrations were also carried out daily on the THC with a 713 ppmv NBS propane standard.

Analyses for benzene were performed on a Hewlett Packard 573A dual FID Gas Chromatograph. Dual gas samples were introduced simultaneously onto separate columns with a Valco 10 port Hastalloy C multiport valve installed immediately forward of the GC syringe injection ports. Peak integrations were compiled on two Hewlett Packard 3380A electronic integrators.

Liquid samples were analyzed by normal syringe injection techniques using benzene as an external standard.

The columns and conditions used for the analyses are listed below:

- 1/8-in. OD, 2-mm ID, 15-ft, 5 percent SP-2100/1.75 percent Benton 34 on 100/120 mech Supelcoport.
- 1/8-in. OD, 2-mm ID, 15-ft, 10 percent TCEP on 100/120 mesh chromosorb P acid washed.
- N_2 carrier at 20 mℓ/min.
- Isothermal at 110° C.

The instrument was calibrated daily with a 5,571-ppmv benzene in air standard. Single analyses were done simultaneously on the two different volumes after calibration.

D.6 CONTINUOUS MONITORING SYSTEMS AND DEVICES FOR FUGITIVE LEAKS

Because the leak determination procedure is not a typical emission measurement technique, continuous monitoring approaches are not directly applicable. Continual surveillance is achieved by repeated monitoring or screening of all potential leak sources. A continuous monitoring system or device could serve as an indicator that a leak has developed between inspection intervals. In the study of fugitive emissions from synthetic organic chemical manufacturing,[4] EPA performed a limited evaluation of fixed-point monitoring systems for their effectiveness in leak detection. The systems consisted of both remote sensing devices with a central readout and a central analyzer system (gas chromatograph) with remotely collected samples. Results of these tests indicated that fixed-point systems were not capable of sensing all leaks found by individual component testing. This is to be expected since these systems are affected significantly by local dispersion

conditions and would require either many individual point locations, or very low detection sensitivities to achieve results similar to those obtained through an individual component survey.

It is recommended that fixed-point monitoring systems not be required since general specifications cannot be formulated to ensure equivalent results and each installation would have to be evaluated individually.

D.7 PERFORMANCE TEST METHOD FOR FUGITIVE LEAKS

The recommended fugitive emission detection procedure is Reference Method 21. This method incorporates the use of a portable instrument to detect the presence of volatile organic vapors at the surface of the interface where direct leakage to the atmosphere could occur. This technique's approach assumes that if an organic leak exists, vapor concentration will increase in the vicinity of the leak and that the measured concentration is generally proportional to the organic compound's mass emission rate.

An additional procedure provided in Reference Method 21 is to determine "no detectable emissions." The portable VOC detector is used to determine local ambient VOC concentration in the vicinity of the source to be evaluated, and then a measurement is made at the surface of the potential leak interface. If a concentration change of less than 2 percent of the leak definition is observed, a "no detectable emissions" condition exists. The definition of 2 percent of the leak definition was selected based on the readability of a meter scale graduated in 2 percent increments from 0 to 100 percent of scale and not necessarily on the performance of emission sources. "No detectable emissions" would exist when the observed concentration change between local ambient and leak interface surface measurements is less than 200 ppmv if the leak definition is 10,000 ppmv.

Reference Method 21 does not include a specification of the instrument calibration basis or a definition of a leak in terms of concentration. Based on results of EPA field tests and laboratory studies, methane is recommended as the reference calibration basis for fugitive emission sources at coke oven by-product recovery units.

At least four types of detection principles currently are available in commercial portable instruments. These are flame ionization, catalytic oxidation, infrared absorption (NDIR), and photoionization. Two types (flame ionization and catalytic oxidation) are known to be available in factory mutual certified versions for use in hazardous atmospheres.

The recommended test procedure includes a set of design and operating specifications and evaluation procedures by which an analyzer's performance can be evaluated. These parameters were selected based on the allowable tolerances for data collection and not on EPA evaluations of the performance of individual instruments. Based on manufacturer's literature specifications and reported test results, commercially available analyzers can meet these requirements.

There is little correlation between screening value and emission rate for sources exhibiting liquid leaks. When a source has a visible liquid leak, a leak rate may be estimated by collecting and measuring the volume of liquid in a given time. The sum of the vapor and liquid leak is then a good estimate of the total leak.

The estimated purchase cost for an analyzer ranges from about $1,500 to $5,000, depending on the type and optional equipment. The cost of surveying a unit consisting of approximately 300 potential leaking sources will consist basically of the cost of 40 labor hours. A two-man team should be able to screen approximately 150 sources per day and record the location and nature of the sources leaking.

An alternative approach to leak detection is an area survey, or walk-through, using a portable detector. In this approach, the unit area is surveyed by walking through the unit, positioning the instrument probe within one meter of all valves and pumps, and continuously recording the concentration on a portable strip chart recorder. After completion of the walk-through, local wind conditions are used with the chart data to locate the approximate source of any increased ambient concentrations. This procedure was found to yield mixed results in an earlier EPA study.[4] In some cases, the majority of leaks located by individual component testing could be located by walk-through surveys. In other tests, prevailing dispersion conditions

and local, elevated ambient concentrations complicated or prevented the interpretation of the results. Because of the potential variability in results from site to site, routine walk-through surveys were not selected as a reference or alternate test procedure.

D.7 REFERENCES

1. Smith, C. D., and J. L. Steinmetz (Radian Corporation). Emission Factors and Frequency of Leak Occurrence for Fittings in Coke By-Product Recovery Units. Draft Final Report. Prepared for U.S. Environmental Protection Agency. Research Triangle Park, NC. Contract No. 68-02-3542. March 1981.

2. Method 21, "Determination of Volatile Organic Compound Leaks." Federal Register 40 CFR, Part 60, Appendix A. 48 FR 37598, August 18, 1983.

3. Wetherold, R. G., L. P. Provost, D. D. Rosebrook, and C. D. Smith. (Radian Corporation). Emission Factors and Frequency of Leak Occurrence for Fittings in Refinery Process Units. Prepared for U.S. Environmental Protection Agency. Research Triangle Park, NC. Publication No. EPA-600/2-79-004. February 1979.

4. U.S. Environmental Protection Agency. VOC Fugitive Emissions in Synthetic Organic Chemicals Manufacturing Industry--Background Information for Proposed Standards, Draft EIS. Research Triangle Park, NC. Publication No. EPA-450/3-80-033a. November 1980.

5. Joint District, Federal, and State Project for the Evaluation of Refinery Emissions. Los Angeles County Air Pollution Control District. Report Numbers 2, 3, 5, 6, and 8. 1957-1958.

6. Memo from Harris, G. E., Radian Corporation, to Wilkins, G. E., Radian Corporation. June 19, 1980. 1 p. Information about bagging costs.

7. U.S. Environmental Protection Agency. Control of Volatile Organic Compound Leaks from Petroleum Refinery Equipment. Research Triangle Park, NC. Publication No. EPA-450/2-78-036. June 1978.

APPENDIX E

METHODOLOGY FOR ESTIMATING LEUKEMIA INCIDENCE AND MAXIMUM LIFETIME RISK FROM EXPOSURE TO BENZENE EMISSIONS FROM COKE OVEN BY-PRODUCT RECOVERY PLANTS

APPENDIX E -

METHODOLOGY FOR ESTIMATING LEUKEMIA INCIDENCE AND MAXIMUM LIFETIME RISK FROM EXPOSURE TO BENZENE EMISSIONS FROM COKE OVEN BY-PRODUCT RECOVERY PLANTS

E.1 INTRODUCTION

The purpose of this appendix is to describe the methodology used to estimate leukemia incidence and maximum lifetime risk from population exposure to benzene emissions from coke oven by-product recovery plants, to present emissions data for the regulatory baseline, and to describe the calculation of input data for other regulatory alternatives. The methodology consists of four major components: estimation of the annual average concentration patterns of benzene in the region surrounding each plant, estimation of the population associated with each computed concentration, estimation of exposures computed by summing the products of the concentrations and associated populations, and finally, estimation of annual leukemia incidence and maximum lifetime risk which are obtained from exposure and benzene potency data.[1] Due to the assumptions made in each of these four steps of the methodology, there is considerable uncertainty associated with the lifetime individual risk and leukemia incidence numbers calculated in this appendix. They may represent overestimates or underestimates. These uncertainties are explained in Section E.7 of this appendix. The health effects of benzene will not be included in this appendix; however, information on health effects is contained in EPA Docket No. 79-3 and "Response to Public Comments on EPA's Listing of Benzene Under Section 112 and Relevant Procedures for the Regulation of Hazardous Air Pollutants," EPA-450/5-82-003. The appendix is presented in major subsections:

- Section E.2, Atmospheric Dispersion Methodology, describes the methodology for calculating concentrations of benzene emissions to a radius of 20 km from the source.

- Section E.3, Population Around Coke Oven By-Product Recovery Plants, describes the method used to estimate the population at risk; i.e., persons residing within 20 km of existing coke oven by-product recovery plants.

- Section E.4, Population Exposure Methodology, describes the methodology for calculating expected population exposures.

- Section E.5, Model Input Data, presents input data for the regulatory baseline and describes the calculation of input data for other regulatory alternatives.

- Section E.6, Leukemia Incidence Estimates, describes the annual leukemia incidence resulting from nonoccupational exposure and the maximum lifetime risk of leukemia attributable to benzene emissions from existing U.S. coke oven by-product recovery plants.

- Section E.7, Uncertainties in Estimates, discusses potential causes of uncertainties in the derivation of the unit risk factor and the human exposure model.

E.2 ATMOSPHERIC DISPERSION METHODOLOGY

The human exposure model,[1] which uses the same basic dispersion algorithm as the EPA's climatological display model (CDM),[2] was used to make concentration pattern estimates.

Because wind velocity and atmospheric stability are the only meteorological variables involved in the Gaussian dispersion estimation, it is only necessary to evaluate 36 potential solutions (six wind speed categories times six stability classes) for a given source elevation and building cross-section combination. In this manner, a file of normalized Gaussian solutions (concentrations/emissions), one for each combination of stability and wind speed classes, is created. This file is then stored for further use (matrix multiplication) in conjunction with climatological (STAR*) data and emissions data. This

---

*STAR data are standard climatological frequence of occurrence summaries formulated for use in EPA models and available for major U.S. sites from the National Climatic Center, Asheville, N.C. The data consist of frequencies which are tabulated as functions of wind speed stability and wind direction classes.

approach allows incorporation of the following key factors in the estimation of annual average ground level concentration patterns from a single emission site:

- Climatological data (STAR) from the nearest or otherwise most appropriate site,
- Individual emissions from each identified stack or vent within a plant, as well as fugitive emissions,
- Plume release height, speed, and buoyancy, and
- Urban or rural character of the emission site.

The output from the concentration pattern part of the computer program is a well-formatted concentration array for 160 receptors around each plant (10 receptors at distances of 0.2, 0.3, 0.5, 0.7, 1, 2, 5, 10, 15, and 20 km along each of 16 wind directions). Each receptor in the array has an associated value which is equal to the sum of all individual contributions from emissions sources within a plant. The concentration patterns for each plant can be found in Docket No. A-79-16.

E.3 POPULATION AROUND COKE OVEN BY-PRODUCT RECOVERY PLANTS

The human exposure model (HEM) estimates the population that resides in the vicinity of each receptor coordinate surrounding each coke oven by-product recovery plant. The population "at risk" to benzene exposure was considered to be persons residing within 20 km of coke oven by-product recovery plants.

A slightly modified version of the "Master Enumeration District List-- Extended (MED-X)" data base is used for population pattern estimation.[1] This data base is broken down into enumeration district/ block group (ED/BG) values. MED-X contains the population centroid coordinates (latitude and longitude) and the 1970 population of each ED/BG in the United States (50 States plus the District of Columbia). For human exposure estimations, MED-X has been reduced from its complete form (including descriptive and summary data) to produce a randomly accessible computer file of the data necessary for the estimation.

A separate file of county-level growth factors, based on 1978 estimates of the 1970 to 1980 growth factor at the county level, has also been used to estimate 1980 population figures for each ED/BG.

E.4 POPULATION EXPOSURE METHODOLOGY

E.4.1 Exposure Methodology

For each receptor coordinate, the estimated concentration of benzene and the population estimated to be exposed to that particular concentration are generated. The HEM multiplies these two numbers to produce population exposure estimates and sums these products for each plant. A two-level scheme has been adopted in order to pair concentrations and populations prior to the computation of exposure. The two-level approach is used because the concentrations are defined on a radius-azimuth (polar) grid pattern with nonuniform spacing. At small radii, the grid cells are generally much smaller than ED/BGs; at large radii, the grid cells are much larger than ED/BGs. The area surrounding the source is divided into two regions, and each ED/BG is classified by the region in which its centroid lies. Population exposures are calculated differently for the ED/BGs located within each region.

For ED/BG centroids located between 0.1 km and 2.8 km from the emission source, populations are divided between neighboring concentration grid points. There are 96 (6 × 16) polar grid points within this range. Each grid point has a polar sector defined by two concentric arcs (radii 0.1, 0.25, 0.4, 0.6, 0.8, 1.2, and 2.8 km) and two wind direction radials. Each of these grid points is assigned to the nearest ED/BG centroid identified from MED-X. The population associated with the ED/BG centroid is then divided among all concentration grid points assigned to it. The exact land area within each polar sector is considered in the apportionment.

For population centroids between 2.8 km and 20 km from the source, a concentration grid cell, the area approximating a rectangular shape bounded by four receptors, is much larger than the area of a typical ED/BG (usually 1 km in diameter). Since there is a linear relationship between the logarithm of concentration and the logarithm of distance for receptors more than 2 km from the source, the entire population of

the EG/BD is assumed to be exposed to the concentration that is geometrically interpolated radially and arithmetically interpolated azimuthally from the four receptors bounding the grid cell. Concentration estimates for 80 (5 × 16) grid cell receptors at 2.0, 5.0, 10.0, 15.0, and 20.0 km from the source along each of 16 wind directions are used as reference points for this interpolation.

In summary, two approaches are used to arrive at coincident concentration/population data points. For the 96 concentration points within 2.8 km of the source, the pairing occurs at the polar grid points using an apportionment of ED/BG population by land area. For the remaining portions of the grid, pairing occurs at the ED/BG centroids themselves, through the use of log-log linear interpolation. (For a more detailed discussion of the methodology used to estimate populations, refer to Reference 1.)

E.4.2 Total Exposure

Total exposure (persons-μg/m^3) is the sum of all multiplied pairs of concentration-population computed by the previously discussed methodology:

$$\text{Total exposure} = \sum_{i=1}^{N} (P_i C_i) \qquad (1)$$

where

P_i = population associated with point i,

C_i = annual average benzene concentration at point i, and

N = total number of polar grid points between 0 and 2.8 km and ED/BG centroids between 2.8 and 20 km.

The computed total exposure is then used with the unit risk factor to estimate incidence and maximum lifetime individual risk. This methodology is described in the following sections. (Note: "Exposure" as used here is the same as "dosage" in the computer printout in Docket A-79-16.)

E.4.3 Unit Risk Factor

The unit risk factor (URF) is defined as the probability of contracting leukemia assuming an individual is exposed to 1 μg/m^3 of

benzene for 1 year. The URF for benzene is 9.9×10^{-8}. The URF was calculated by EPA's Carcinogen Assessment Group (CAG). The derivation of the URF can be found in the CAG report on population risk to ambient benzene exposure[3] and is updated in the EPA report, "Response to Public Comments on EPA's Listing of Benzene Under Section 112 and Relevant Procedures for the Regulation of Hazardous Air Pollutants," EPA-450/5-82-003.

E.4.4 Calculation of Estimated Annual Leukemia Incidence

The annual leukemia incidence associated with a given plant under a given regulatory alternative is the product of the total exposure in $\mu g/m^3$-persons and the unit risk factor, 9.9×10^{-8}. Thus,

$$\text{Annual incidence} = (\text{total exposure}) \times (\text{unit risk factor}) \ , \qquad (2)$$

where total exposure is calculated according to Equation (1).

E.4.5 Calculation of Maximum Lifetime Risk

The populations in areas surrounding coke oven by-product recovery plants have various risk levels of leukemia incidence from exposure to benzene emissions. Using the maximum concentration of benzene to which any person is exposed, it is possible to calculate the maximum lifetime risk of leukemia (lifetime probability of leukemia to persons exposed to the highest concentration of benzene) attributable to benzene emissions using the following equation:

$$\text{Maximum lifetime risk} = {}_{max}C_{ij} \times (\text{URF}) \times 70 \ , \qquad (3)$$

where

${}_{max}C_{ij}$ = the maximum concentration at any receptor location where exposed persons reside, and

URF = the unit risk factor, 9.9×10^{-8}, and

70 years = average individual's life span.

E.5 MODEL INPUT DATA

The inputs to the model include plant-specific locations, source types, and emissions from each source type. Table E-1 lists the 55 plants with the latitudes and longitudes, which were derived from maps. It also lists the emissions under the regulatory baseline for

TABLE E-1. COKE BY-PRODUCT RECOVERY PLANTS AND SOURCES OF BENZENE EMISSIONS FOR REGULATORY BASELINE[a]

Plant and address	Latitude	Longitude	Coke production capacity (Mg/day)	Tar decanter	Tar storage	Excess-ammonia liquor tank	Light-oil storage	Light-oil waste-water sump	Light-oil condenser vent	Wash-oil decanter	Wash-oil circulation tank	Leaks	Tar dewatering	Flushing-liquor circulation tank	Benzene storage	Denver flotation unit	Naphthalene melt pit	Naphthalene drying tank	Tar-bottom final-cooler cooling tower	Direct-water final-cooler cooling tower	BTX storage	Tar-intercepting sump
1. Alabama By-Products, Tarrant, AL	33.58077	86.78128	1,938	1.7253	0.2694	0.2018	0.1301	0.3364	1.9661	0.0853	0.0853	0.7832	0.4709	0.2018	–	–	–	–	1.5700	–	–	2.1308
2. Empire Coke, Holt, AL	33.23720	87.48330	328	0.2921	0.0456	0.0342	0.0220	0.0569	0.3378	0.0144	0.0144	0.7832	0.0797	0.0342	–	0.3305	0.0756	0.0004	–	1.0250	0.0220	0.3606
3. Jim Walter, Birmingham, AL	35.56096	86.79167	1,362	1.2128	0.1893	0.1419	0.0914	0.2364	1.4029	0.0599	0.0599	0.7832	0.3310	0.1419	–	–	–	–	1.1032	–	0.0914	1.4975
4. Koppers Company, Woodward, AL	33.45017	86.96342	1,538	1.3692	0.2139	0.1602	0.1032	0.2670	1.5841	0.0677	0.0677	0.7832	0.3737	0.1602	–	–	–	–	1.2458	–	–	1.6910
5. Republic Steel, Gadsden, AL	34.01196	86.04382	2,972	1.8446	0.2880	0.2158	0.1391	0.3597	2.1342	0.0912	0.0912	0.7832	0.5035	0.2158	–	2.0875	0.4776	0.0026	–	6.4750	–	2.2782
6. Republic Steel, Thomas, AL	33.52677	86.86217	862	0.7676	0.1198	0.0898	0.0579	0.1496	0.8879	0.0379	0.0379	0.7832	0.2095	0.0898	–	0.8685	0.1987	0.0011	–	2.6938	–	0.9478
7. U. S. Steel, Fairfield, AL	33.48624	86.92789	4,324	3.8495	0.6010	0.4504	0.2803	0.7507	4.4537	0.1903	0.1903	0.7832	1.0507	0.4504	–	4.3564	0.9967	0.0054	–	13.5125	–	4.7542
8. Kaiser Steel, Fontana, CA	34.12500	117.44667	4,175	3.7172	0.5803	0.4348	0.2803	0.7248	4.3003	0.1837	0.1837	0.7832	1.0145	0.4348	–	–	–	–	3.3818	–	0.2803	4.5904
9. CF & I, Pueblo, CO	38.18194	104.62083	2,433	2.1661	0.3382	0.2534	0.1633	0.4224	2.5060	0.1071	0.1071	1.8106	0.5912	0.2534	0.1633	–	–	–	1.9707	–	–	2.6751
10. Interlake, S. Chicago, IL	41.64798	87.62442	1,416	1.2609	0.1968	0.1475	0.0951	0.2458	1.4585	0.0623	0.0623	0.7832	0.3341	0.1475	–	1.4266	0.3264	0.0018	–	4.4250	–	1.5569
11. National Steel, Granite City, IL	38.69607	90.12426	1,951	1.7368	0.2712	0.2032	0.1310	0.3387	2.0095	0.0858	0.0858	0.7832	0.4741	0.2032	–	1.9656	0.4497	0.0024	–	6.0969	0.1310	2.1451
12. Republic Steel, S. Chicago, IL	41.68983	87.54191	1,203	1.0713	0.1672	0.1253	0.0808	0.2088	1.2391	0.0529	0.0529	0.7832	0.2923	0.1253	–	–	–	–	0.9744	–	–	1.3227
13. Bethlehem Steel, Burns Harbor, IN	41.63428	87.14046	4,572	4.0704	0.6355	0.4762	–	–	–	–	–	–	1.1110	0.4762	–	–	–	–	–	–	–	5.0269
14. Citizens Gas & Coke Util., Indianapolis, IN	39.75357	86.11640	1,305	1.1617	0.1814	0.1359	–	–	–	–	–	–	0.3171	0.1359	–	–	–	–	–	–	–	1.4349
15. Indiana Gas & Chemical, Terre Haute, IN	39.44720	87.39628	363	0.3233	0.0505	0.0378	0.0244	0.0630	0.3739	0.0160	0.0160	0.7832	0.0882	0.0378	–	0.3657	0.0837	0.0005	–	1.1344	–	0.3991
16. Inland Steel, E. Chicago, IN	41.64694	87.42750	7,731	6.8828	1.0746	0.8052	0.5189	1.3421	7.9629	0.3402	0.3402	0.7832	1.8786	0.8052	–	–	–	–	6.2621	–	–	8.5002
17. J&L Steel, E. Chicago, IN	41.65889	87.47583	3,772	3.3582	0.5243	0.3929	0.2532	0.6548	3.8852	0.1660	0.1660	0.7832	0.9166	0.3929	–	3.8003	0.8695	0.0047	–	11.7875	0.2532	4.1473
18. U. S. Steel, Gary, IN	41.60583	87.31444	9,145	8.1418	1.2712	0.9525	0.6139	1.5876	9.4194	0.4024	0.4024	0.7832	2.2222	0.9525	–	9.2136	2.1079	0.0114	–	28.5781	–	10.0549
19. Allied Chemical, Ashland, KY	38.45640	82.60786	2,632	2.3432	0.3659	0.2741	0.1767	0.4569	2.7110	0.1158	0.1158	0.7832	0.6396	0.2741	–	–	–	–	2.1319	–	–	2.8939
20. Bethlehem Steel, Sparrows Point, MD	39.20454	76.49800	7,057	6.2832	0.9809	0.7350	0.4737	1.2251	7.2687	0.0062	0.0062	1.8106	1.7149	0.7350	0.4737	–	–	–	–	–	–	7.7592
21. Detroit Coke, Detroit, MI	43.23966	83.10320	1,687	1.5020	0.2345	0.1757	–	–	–	–	–	–	0.4099	0.1757	–	–	–	–	–	–	–	1.8549
22. Ford Motor Company, Dearborn, MI	42.30399	83.15585	3,035	2.7048	0.4215	0.3161	0.2037	0.5269	3.1263	0.1335	0.1335	0.7832	0.7377	0.3161	–	–	–	–	–	–	–	3.3371
23. National Steel, Detroit, MI	42.25872	83.12036	5,280	4.7009	0.7339	0.5499	0.3544	0.9166	5.4384	0.2323	0.2323	0.7832	1.2830	0.5499	–	5.3167	1.2222	0.0073	–	16.5000	0.3544	5.8054
24. Carondolet Corporation, St. Louis, MO	38.54308	90.28183	636	0.5664	0.0884	0.0662	–	–	–	–	–	–	0.1546	0.0662	–	–	–	–	–	–	–	0.6993
25. Tonawanda Coke Co., Buffalo, NY	42.98295	78.93953	818	0.7281	0.1137	0.0852	–	–	–	–	–	–	0.1988	0.0852	–	–	–	–	–	–	–	0.8994
26. Bethlehem Steel, Lackawanna, NY	42.82469	78.85427	4,038	3.5949	0.7613	0.4206	0.2711	0.7010	4.1591	0.1777	0.1777	0.7832	0.9812	0.4206	–	–	–	–	3.2708	–	0.2711	4.4398
27. Donner-Hanna Coke, Buffalo, NY	42.85411	78.83856	2,356	2.0978	0.3275	0.2454	0.1582	0.4090	2.4267	0.1037	0.1037	0.7832	0.5725	0.2454	–	–	–	–	1.9084	–	–	2.5904
28. Armco Steel, Hamilton, OH	39.43155	84.53110	1,484	1.3210	0.2063	0.1546	0.0946	0.2576	1.5285	0.0653	0.0653	0.7832	0.3606	0.1546	–	1.4951	0.3421	0.0019	–	4.6375	–	1.6317
29. Armco Steel, Middletown, OH	39.49511	84.40667	4,853	4.3207	0.6746	0.5054	0.3258	0.8425	4.9986	0.2135	0.2135	1.8106	1.1793	0.5054	0.3278	4.8894	1.1186	0.0061	–	15.1656	–	5.3359
30. Ironton Coke, Ironton, OH	38.50706	82.65830	2,351	2.0930	0.3268	0.2449	0.1578	0.4081	2.4215	0.1034	0.1034	0.7832	0.5713	0.2449	–	–	–	–	1.9043	–	–	2.5849

TABLE E-1. (con.)

Plant and address	Latitude	Longitude	Coke production capacity (Mg/day)	Tar decanter	Tar storage	Excess-ammonia liquor tank	Light-oil storage	Light-oil waste-water sump	Light-oil condenser vent	Wash-oil decanter	Wash-oil circulation tank	Leaks	Tar dewatering	Flushing-liquor circulation tank	Benzene storage	Denver flotation unit	Naphthalene melt pit	Naphthalene drying tank	Tar-bottom final-cooler cooling tower	Direct-water final-cooler cooling tower	BTX storage	Tar-intercepting sump
31. J&L Steel, Campbell, OH	41.06436	80.59536	2,982	2.6351	0.4145	0.3106	0.2002	0.5177	3.0715	0.1312	0.1312	0.7832	0.7246	0.3106	–	3.0044	0.6874	0.0037	–	9.3188	–	3.2787
32. Koppers Company, Toledo, OH	41.67131	83.48896	430	0.3831	0.0598	0.0448	–	–	–	–	–	–	0.1045	0.0448	–	–	–	–	3.483	–	–	0.4728
33. New Boston Coke, Portsmouth, OH	38.75347	82.92522	1,031	0.9177	0.1433	0.1074	0.0692	0.1790	1.0619	0.0454	0.0454	0.7832	0.2505	0.1074	–	–	–	–	0.8351	–	–	1.1336
34. Republic Steel, Cleveland, OH	41.47210	81.66584	4,806	4.2788	0.6680	0.5006	0.3226	0.8343	4.9502	0.2115	0.2115	0.7832	1.1679	0.5006	–	–	–	–	–	–	0.3226	5.2842
35. Republic Steel, Massillon, OH	40.77106	81.53319	455	0.4052	0.0633	0.0474	0.0305	0.0790	0.4687	0.0200	0.0200	0.7832	0.1106	0.0474	–	0.4584	0.1049	0.0006	–	1.4219	–	0.5003
36. Republic Steel, Warren, OH	41.21176	80.81750	2,584	2.3004	0.3592	0.2691	0.1735	0.4486	2.6615	0.1137	0.1137	0.7832	0.6279	0.2691	–	2.6034	0.5956	0.0032	–	–	–	2.8411
37. Republic Steel, Youngstown, OH	41.07977	80.62503	2,395	2.1324	0.3329	0.2494	0.1608	0.4158	2.4669	0.1054	0.1054	1.8106	0.5820	0.2494	0.1608	2.4130	0.5521	0.0030	–	7.4844	–	2.6333
38. U. S. Steel, Lorain, OH	41.48645	81.67676	3,645	3.2451	0.5067	0.3796	0.2447	0.6328	3.7544	0.1604	0.1604	0.7832	0.8857	0.3796	–	3.6723	0.8402	0.0046	–	11.3906	–	4.0077
39. Bethlehem Steel, Bethlehem, PA	40.61226	75.36644	5,293	4.7124	0.7357	0.5513	0.3553	0.9189	5.4518	0.2329	0.2329	0.7832	1.2862	0.5513	–	5.3327	1.2200	0.0066	–	16.5406	0.3552	5.8197
40. Bethlehem Steel, Johnstown, PA	40.33333	78.93750	1,044	0.9293	0.1451	0.1087	0.0701	0.1812	1.0753	0.0459	0.0459	0.7832	0.2537	0.1087	–	–	–	–	0.8456	–	0.0701	1.1479
41. J&L Steel, Aliquippa, PA	40.63095	80.26250	3,327	2.9621	0.4625	0.3465	0.2233	0.5776	3.4268	0.1464	0.1464	1.8106	0.8085	0.3465	0.2233	–	–	–	2.6949	–	–	3.6580
42. J&L Steel, Pittsburgh, PA	40.43165	79.96730	4,898	4.3606	0.6808	0.5101	0.3288	0.8503	5.0449	0.2155	0.2155	0.7832	1.1902	0.5101	–	4.9347	1.1290	0.0061	–	15.3063	–	5.3854
43. Koppers Company, Erie, PA	42.11905	80.10000	567	0.5048	0.0788	0.0591	–	–	–	–	–	–	0.1378	0.0591	–	–	–	–	–	–	–	0.6234
44. Philadelphia Coke, Philadelphia, PA	39.99478	75.07028	798	0.7103	0.1109	0.0831	–	–	–	–	–	–	0.1939	0.0831	–	–	–	–	–	–	–	0.8774
45. Shenango, Inc. Pittsburgh, PA	40.49935	80.09017	1,633	1.4539	0.2270	0.1701	0.1096	0.2835	1.6820	0.0719	0.0719	0.7832	0.3968	0.1701	–	1.6453	0.3764	0.0020	–	5.1031	–	1.7955
46. U. S. Steel, Clairton, PA	40.29561	79.87055	12,673	11.2829	1.7616	1.3199	0.8507	2.2000	0.2611	0.5576	0.5576	1.8106	–	1.3199	0.8507	–	–	–	–	–	–	13.9340
47. U. S. Steel, Fairless Hills, PA	40.16667	74.81250	2,505	2.2301	0.3482	0.2609	0.1682	0.4349	2.5802	0.1102	0.1102	0.7832	0.6087	0.2009	–	2.5238	0.5774	0.0031	–	7.8281	–	2.7543
48. Wheeling-Pittsburgh, Monessen, PA	40.16170	79.90447	1,339	1.1914	0.1861	0.1395	0.0899	0.2325	1.3792	0.0589	0.0589	0.7832	0.3254	0.1395	–	–	–	–	1.0846	–	–	1.4722
49. Chattanooga Coke & Chem., Chattanooga, TN	34.99507	85.31705	355	0.3162	0.0494	0.0370	0.0238	0.0616	0.3657	0.0156	0.0156	0.7832	0.0863	0.0370	–	0.3577	0.0818	0.0004	–	1.1094	–	0.3903
50. Lone Star Steel, Lone Star, TX	32.94821	94.67945	1,387	1.2349	0.1928	0.1445	0.0931	0.2408	1.4286	0.0610	0.0610	0.7832	0.3370	0.1445	–	1.3966	0.3211	0.0019	–	4.3344	0.0931	1.5250
51. U. S. Steel, Provo, UT	40.31676	111.74144	2,982	2.6551	0.4145	0.3106	0.2002	0.5177	3.0715	0.1312	0.1312	1.8106	0.7246	0.3106	0.2002	3.0044	0.6874	0.0037	–	9.3188	–	3.2787
52. National Steel, Browns Island, WV	40.41750	80.60500	2,999	2.6700	0.4169	0.3124	0.2013	0.5206	3.0890	0.1320	0.1320	0.7832	0.7288	0.3124	–	–	–	–	–	–	0.2013	3.2974
53. National Steel, Weirton, WV	40.41750	80.60500	3,044	2.7099	0.4231	0.3170	0.2043	0.5284	3.1353	0.1339	0.1339	0.7832	0.7397	0.3170	–	–	–	–	2.4656	–	0.2043	3.3469
54. Wheeling-Pittsburgh, E. Steubenville, WV	40.34189	80.60442	4,127	3.6743	0.5737	0.4298	0.2770	0.7165	4.2508	0.1816	0.1816	0.7832	1.0029	0.4298	–	–	–	–	–	–	–	4.5376
55. Milwaukee Solvay, Milwaukee, WI	43.01310	87.91170	534	0.4755	0.0742	0.0556	–	–	–	–	–	–	0.1298	0.0556	–	–	–	–	–	–	–	0.5871

[a]Benzene emissions are in grams per second.

each of the source types present in the plant. The baseline reflects the emissions with no benzene standard under Section 112 of the Clean Air Act. For most sources at most plants, baseline represents uncontrolled emissions. However, where a source at a plant is controlled, the baseline emissions reflect that level of control.

The rate of emissions for each source type at each plant is determined using the benzene emission factors per megagram of coke produced that are listed in Chapter 3 of the background information document and the total coke production. As an example, the calculation of emissions from tar decanting at Plant 26 is presented in Equation (4). The emission factor for tar decanting has been determined to be 77 g of benzene per megagram of coke produced. At Plant 26, the capacity is 4,038 Mg of coke produced per day. The rate of benzene emissions from tar decanting in grams per second is obtained as follows:

$$\left(\frac{77 \text{ g of benzene}}{\text{Mg of coke}}\right) \left(\frac{4{,}038 \text{ Mg of coke}}{\text{day}}\right) \left(\frac{\text{day}}{86{,}400 \text{ sec}}\right) = 3.60 \text{ g/s} \quad . \quad (4)$$

When the emissions are controlled, the uncontrolled emission rates are adjusted according to the efficiency of the control technique. For example, a gas blanketing system on tar decanters provides 95-percent control of benzene emissions. As shown in Equation (4), the uncontrolled rate of benzene emissions from the tar decanter at Plant 26 is 3.60 g/s. When controlled by gas blanking, this emission rate would be reduced by 95 percent, to 0.18 g/s (3.60 × 0.05).

Table E-2 presents the parameters of the stack and stack gas that are input to the model for each source type. The parameters include gas temperature and velocity, diameter of the vent, height of emission point from the ground, and vertical cross-sectional area of the building associated with the stack. They were derived from plant visits, emission test reports, Section 114 responses, blueprints of plant designs supplied by the companies, and engineering estimates.

This appendix only shows model inputs and results for the baseline case. When best available technology (BAT) and beyond BAT are selected,

TABLE E-2. COKE BY-PRODUCT RECOVERY PLANTS
DISPERSION ANALYSIS PARAMETERS

Source	Temperature of gas emitted (°K)	Diameter of vent (m)	Stack gas Velocity (m/s)	Height of emission point from ground (m)	Vertical cross-sectional area of building (m^2)
Tar decanter	328	0.29	2.25	4.57	43.7
Tar storage	319	0.44	0.59	12.3	240.0
Excess ammonia-liquor tank	323	0.16	0.0001	10.1	101.9
Light-oil storage tank	307	0.19	0.0001	4.30	23.6
Light-oil wastewater sump	322	5.64	0.0001	0	0
Light-oil condenser vent	313	0.05	0.68	17.0	0
Wash-oil decanter	363	0.20	4.1	4.57	38.1
Wash-oil circulation tank	362	0.19	0.0001	4.30	23.6
Leaks	NA[a]	NA	NA	1.00	0
Tar dewatering	346	0.16	2.8	4.27	21.6
Flushing-liquor circulation tank	348	0.16	0.0001	4.60	29.2
Benzene storage	307	0.19	0.0001	4.30	23.6
Denver flotation unit	323	5.80	0.0001	1.00	7.0
Naphthalene melt pit	367	4.07	0.0001	0	0
Naphthalene drying tank	367	0.16	2.93	4.30	21.6
Tar-bottom final-cooler cooling tower	295	6.09	7.9	6.70	58.5
Direct-water final-cooler cooling tower	303	5.17	6.9	22.9	181.3
BTX storage	307	0.19	0.0001	4.30	23.6
Tar-intercepting sump	339	1.95	0.0001	0	0

NA = Not applicable.

[a]The SHED/HEM defaults to 293° K as an ambient temperature if the input data do not specify a temperature.

the dispersion and exposure modeling are done using the same methodology as for the baseline case. The emission rates are adjusted according to the percent reduction afforded by the control technique.

E.6 LEUKEMIA INCIDENCE ESTIMATES

Table E-3 presents the estimates of maximum annual average concentration and of total exposure for each plant under baseline conditions. The industry-wide estimates of total exposure, annual incidence, and maximum lifetime risk under baseline are presented in the following sections. The computer printout indicating health risk impacts at the baseline, BAT and beyond BAT levels can be found in Docket A-79-16.

E.6.1 Total Exposure

Total exposure (in megagrams per cubic meter multiplied by the number of persons) was found by multiplying each appropriate concentration by the population exposed to that concentration and summing the products of these two numbers as shown in Equation (1). Total industry-wide exposure under baseline is 2.74×10^7 persons-$\mu g/m^3$.

E.6.2 Estimated Annual Leukemia Incidence

The annual leukemia incidence is estimated as shown by Equation (2). The industry-wide estimated annual leukemia incidence is 2.6 cases/year.

E.6.3 Maximum Lifetime Risk Estimates

The maximum lifetime risk estimate within the coke oven by-product recovery industry is 8.3×10^{-3}, where the maximum concentration is 1.19×10^3 $\mu g/m^3$. The population at this level of risk is a small subset of the total population exposed to benzene emissions from coke oven by-product recovery plants.

E.7 UNCERTAINTIES

Estimates of both leukemia incidence and maximum lifetime risk are primarily functions of estimated benzene concentrations, populations, the unit risk factor, and the exposure model. The calculations of these variables are subject to a number of uncertainties of various degrees. Some of the major uncertainties are identified below.

TABLE E-3. ESTIMATED MAXIMUM CONCENTRATION AND EXPOSURE FOR BENZENE EMISSIONS FROM COKE BY-PRODUCT PLANTS BASELINE CASE

Plant and address	Maximum annual average concentration ($\mu g/m^3$)	Total exposure (persons-$\mu g/m^3$)
1. Alabama By-Products, Terrant, AL	3.49×10^2	3.17×10^5
2. Empire Coke, Holt, AL	1.10×10^2	4.24×10^4
3. Koppers Company, Woodward, AL	2.86×10^2	1.90×10^5
4. Republic Steel, Gadsden, AL	5.13×10^2	2.36×10^5
5. Republic Steel Thomas Works, Birmingham, AL	2.37×10^2	3.37×10^5
6. Jim Walter, Birmingham, AL	1.15×10^2	2.78×10^5
7. U.S. Steel, Fairfield, AL	2.50×10^2	9.75×10^5
8. Kaiser Steel, Fontana, CA	1.19×10^3	4.47×10^5
9. CF&I, Pueblo, CO	1.00×10^2	1.51×10^4
10. National Steel, Granite City, IL	4.79×10^2	5.84×10^5
11. Interlake, S. Chicago, IL	1.00×10^2	8.64×10^5
12. Republic Steel, S. Chicago, IL	1.11×10^2	4.34×10^5
13. Bethlehem Steel, Burns Harbor, IN	1.00×10^2	5.08×10^4
14. Citizens Gas & Coke Utility, Indianapolis, IN	8.37×10^1	2.01×10^5
15. Indiana Gas and Chemical, Terre Haute, IN	6.73×10^1	7.98×10^4
16. Inland Steel, East Chicago, IN	6.06×10^2	1.11×10^6
17. J&L Steel, East Chicago, IN	4.43×10^2	1.08×10^6
18. U.S. Steel, Gary, IN	5.00×10^2	1.41×10^6
19. Allied Chemical, Ashland, KY	2.92×10^2	1.98×10^5
20. Bethlehem Steel, Sparrows Point, MD	2.50×10^2	6.33×10^5
21. Detroit Coke, Detroit, MI	5.00×10^1	1.95×10^5
22. Ford Motor Company, Dearborn, MI	1.00×10^2	7.17×10^5
23. National Steel, Detroit, MI	1.00×10^2	1.25×10^6
24. Carondolet Corporation, St. Louis, MO	7.58×10^1	1.49×10^5
25. Tonawanda Coke Co., Buffalo, NY	8.28×10^1	4.49×10^4
26. Bethlehem Steel, Lackawanna, NY	2.50×10^2	7.99×10^5
27. Donner-Hanna Coke, Buffalo, NY	3.49×10^2	7.37×10^5

(continued)

TABLE E-3 (continued)

Plant and address	Maximum annual average concentration ($\mu g/m^3$)	Total exposure (persons-$\mu g/m^3$)
28. Ironton Coke, Ironton, OH	2.64×10^2	2.30×10^5
29. Armco Steel, Hamilton, OH	1.00×10^2	1.66×10^5
30. Armco Steel, Middletown, HO	6.15×10^2	9.57×10^5
31. New Boston Coke, Portsmouth, OH	1.30×10^2	4.06×10^4
32. J&L Steel, Campbell, OH	3.47×10^2	5.85×10^5
33. Koppers Co., Toledo, OH	3.34×10^1	3.22×10^4
34. Republic Steel, Cleveland, OH	5.19×10^2	1.16×10^6
35. Republic Steel, Massillion, OH	2.50×10^1	6.50×10^4
36. Republic Steel, Warren, OH	2.08×10^2	2.06×10^5
37. Republic Steel, Youngtown, OH	3.12×10^2	5.76×10^5
38. U.S. Steel, Lorain, OH	2.50×10^2	1.33×10^6
39. Bethlehem Steel, Bethlehem, PA	6.77×10^2	1.41×10^6
40. Bethlehem Steel, Johnstown, PA	1.25×10^2	1.97×10^5
41. J&L Steel, Aliquippa, PA	3.36×10^2	2.63×10^5
42. Koppers Company, Erie, PA	5.42×10^1	6.93×10^4
43. Philadelphia Coke, Philadelphia, PA	4.27×10^1	1.86×10^5
44. Shenango Coke, Pittsburgh, PA	1.00×10^2	3.90×10^5
45. U.S. Steel, Clairton, PA	9.25×10^2	1.05×10^6
46. U.S. Steel, Fairless Hills, PA	4.82×10^2	8.88×10^5
47. Wheeling-Pittsburgh, Monessen, PA	1.34×10^2	1.13×10^5
48. Chattanooga Coke & Chemical, Chattanooga, TN	1.25×10^2	1.15×10^5
49. Lone Star Steel, Lone Star, TX	1.00×10^2	1.60×10^4
50. Lone Star Steel, Provo, UT	1.00×10^2	9.63×10^4
51. National Steel, Browns Island, WV	2.76×10^2	1.26×10^5
52. National Steel, Weirton, WV	2.82×10^2	1.46×10^5
53. Wheeling-Pittsburgh, E. Steubenville, WV	5.00×10^1	1.86×10^5
54. Milwaukee Solvay, Milwaukee, WI	3.06×10^1	1.23×10^5
55. J&L Steel, Pittsburgh, PA	6.35×10^2	3.25×10^6

E.7.1 Benzene Concentrations

Modeled ambient benzene concentrations depend upon: (1) plant configuration, which is difficult to determine for more than a few plants; (2) emission point characteristics, which can be different from plant to plant and are difficult to obtain for more than a few plants; (3) emission rates, which may vary over time and from plant to plant; and (4) meteorology, which is seldom available for a specific plant. The particular dispersion modeling used can also influence the numbers. The dispersion models also assume that the terrain in the vicinity of the source is flat. For sources located in complex terrain, the maximum annual concentration could be underestimated by several fold due to this assumption. The best model to use (ISC) is usually too resource intensive for modeling a large number of sources. The less complex model that was used for coke by-product recovery plants introduces further uncertainty through a greater number of generalizing assumptions. The dispersion coefficients used in modeling are based on empirical measurements made within 10 kilometers of sources. These coefficients become less applicable at long distances from the source, and the modeling results become more uncertain. Assuming the inputs to the dispersion model are accurate, the predicted benzene concentrations are considered to be accurate to within a factor of 2.

E.7.2 Exposed Populations

Several simplifying assumptions were made with respect to the assumed exposed population. The exposed population was assumed to be immobile, remaining at the same location 24 hours per day, 365 days per year, for a lifetime (70 years). This assumption is counterbalanced to some extent (at least in the calculation of incidence) by the assumption that no one moves into the exposure area either permanently as a resident or temporarily as a transient. The population "at risk" was assumed to reside within 20 km of each plant regardless of the estimated concentration at that point. The selection of 20 km is considered to be a practical modeling stop-point considering the uncertainty of dispersion estimates beyond 10 km. The results of dispersion modeling are felt to be reasonably accurate within that

distance (see above). The uncertainty of these assumptions has not been quantified.

E.7.3 Unit Risk Factor

The unit risk factor contains the uncertainties associated with the occupational studies of Infante, Aksoy, and Ott, and the variations in the dose/response relationships among the studies. Other uncertainties regarding the occupational studies and the workers exposed that may affect the unit risk factor were raised during the public comment period on the listing of benzene and focus on assumptions and inconclusive data contained in the studies. However, those uncertainties have not been quantified.

E.7.4 Other Uncertainties

There are several uncertainties associated with estimated health impacts. Maximum lifetime risk and annual leukemia incidence were calculated using the unit risk factor, which is based on a no-threshold linear extrapolation of leukemia risk and applies to a presumably healthy white male cohort of workers exposed to benzene concentrations in the parts per million range. It is uncertain whether the unit risk factor can be accurately applied to the general population, which includes men, women, children, nonwhites, the aged, and the unhealthy, who are exposed to concentrations in the parts per billion range. It is uncertain whether these widely diverse segments of the population may have susceptibilities to leukemia that differ from those of workers in the studies. Furthermore, while leukemia is the only benzene health effect considered in these calculations, it is not the only possible health effect. Other health effects, such as aplastic anemia and chromosomal aberrations, are not as easily quantifiable and are not reflected in the risk estimates. Although these other health effects have been observed at occupational levels, it is not clear if they result from ambient benzene exposure levels. Additionally, benefits that would affect the general population as the result of indirect control of other organic emissions in the process of controlling benzene emissions from coke by-product recovery plants are not quantified. Possible benzene exposures from other sources also are

not included in the estimate. For example, an individual living near a coke by-product recovery plant is also exposed to benzene emissions from automobiles. Finally, these estimates do not include cumulative or synergistic effects of concurrent exposure to benzene and other substances.

E.8 REFERENCES

1. Environmental Protection Agency. 1980: Human Exposure to Atmospheric Concentrations of Selected Chemicals, Attachment B. U.S. Environmental Protection Agency. Research Triangle Park, North Carolina. EPA Contract No. 68-02-3066.

2. Busse, A. D., and J. R. Zimmerman. User's Guide for the Climatological Dispersion Model. U.S. Environmental Protection Agency. Research Triangle Park, North Carolina. Publication No. EPA-RA-73-024 (NTIS PB 227346/AS). December 1973.

3. Albert , R. E. Carcinogen Assessment Group's Final Report on Population Risk to Ambient Benzene Exposures. U.S. Environmental Protection Agency. Publication No. EPA-450/5-80-004. January 1979.

APPENDIX F

SUPPLEMENTAL INFORMATION FOR THE COST ANALYSIS

APPENDIX F

SUPPLEMENTAL INFORMATION FOR THE COST ANALYSIS

F.1 CONTROL COSTS FOR FUGITIVE BENZENE EMISSIONS FROM EQUIPMENT COMPONENTS

The detailed cost analysis for various control techniques applied to fugitive emission sources is presented in Tables F-1 through F-6. Controls are analyzed for valves, pumps, exhausters, pressure relief devices, open-ended lines, and sampling connections in benzene service. The tables include estimates for both a leak detection and repair program at different intervals and costs of equipment specifications. The analysis for each source is on a per item basis (e.g., cost per valve) and includes capital costs, annualized capital and operating costs, recovery credits, emission reductions, and cost effectivenesses.

For the purpose of this analysis and for consistency with the model plants derived in Chapter 6, two types of plants are defined. One type of plant recovers light oil only, and the other plant recovers light oil and benzene. Model Plants 1 and 2 from Chapter 6 are assigned to the first type, and Model Plant 3 represents the second type, which produces benzene. Recovery credits for all of the model plants are based on the value and quantity of benzene in the total emission reduction. A value of $350/Mg benzene (1979 dollars) is used. For Model Plants 1 and 2 which do not refine light oil to benzene, this is equivalent to a recovery credit of $245/Mg for additional light oil which is 70 percent benzene. Emission reductions and cost effectivenesses are different for the two types because some of the equipment at Model Plant 3 handles pure benzene and therefore has a higher benzene emission rate. For the purpose of estimating emission reductions, the process streams at Model Plants 1 and 2 are assumed to

TABLE F-1. ANNUALIZED CONTROL COSTS FOR VALVES IN LIGHT LIQUID SERVICE[a]
(May 1979 Dollars)

Costs	Control technique: Quarterly inspections	Monthly inspections	Sealed-bellows valve
Installed capital cost	0	0	3,700[b]
Annualized capital			
A. Control equipment[c]	0	0	600[d]
B. Initial leak repair[e]	0.44	0.44	0
Annualized operating costs			
A. Maintenance	0	0	185[f]
B. Miscellaneous	0	0	148[g]
C. Labor			
1. Monitoring[h]	2.04	6.09	0
2. Leak repair[i]	3.27	3.34	0
3. Administrative and support[j]	2.12	3.77	0
Total annual cost before credit	7.87	13.64	933
Recovery credit			
Models 1 and 2[k]	14.7	16.8	23.1
Model 3[k]	18.2	20.7	28.7
Net annualized cost[l]			
Models 1 and 2	(6.83)	(3.16)	910
Model 3	(10.33)	(7.06)	904
Total emission reduction (Mg/yr)			
All VOC's[m]	0.060	0.069	0.095
Benzene			
Models 1 and 2[n]	0.042	0.048	0.066
Model 3[n]	0.052	0.059	0.082
Cost effectiveness ($/Mg)[o]			
VOC's ($/Mg VOC)			
Models 1 and 2	(114)	(46)	9,600
Model 3	(172)	(102)	9,500
($/Mg benzene)[n]			
Models 1 and 2	(163)	(66)	13,800
Model 3	(199)	(120)	11,000
Weighted average ($/Mg benzene)[p]	(170)	(75)	13,300

[a]All costs and emission reduction estimates are for one piece of equipment in benzene service.

[b]Telecon. McInnis, J. R., PES, Inc., to Caton, V., and Hetrick, C., Chempump Division of Crane, Warrington, PA. August 23, 1979. Cost of sealed-bellows valve.

[c]Cost of monitoring instrument is not included in this analysis.

[d]Based on 10-year equipment life and 10 percent interest (CRF = 0.163).

[e]Annualized charge for initial leak repairs for a valve inspection program is obtained by: number of leaks × repair time × 15.50/hr × 1.4 (overhead) × 0.163 (CRF for initial repair, 10 years at 10 percent interest). Assume 11 percent of light-liquid valves leak in initial survey. Initial leak repair is constant for all monitoring intervals.

	# valves	×	% leaking	=	# leaks	×	Repairs time (hr)	×	Labor rate ($/hr)	×	1.4	×	0.163	=	$/yr
Light liquid:	1	×	0.11	=	0.11	×	1.13	×	15.50	×	1.4	×	0.163	=	0.44

[f] 0.05 × capital cost.

[g] 0.04 × capital cost.

[h] Monitoring labor cost (from LDAR model):

	# light-liquid valves	×	Fraction screened	=	# valves screened	×	Monitoring time (hr)	×	Labor rate ($/hr)	=	Monitoring labor cost ($/yr)
Quarterly:	1	×	3.94	=	3.94	×	2/60	×	15.50	=	2.04
Monthly:	1	×	11.79	=	11.79	×	2/60	×	15.50	=	6.09

[i] Leak repair cost (from LDAR model):

	# light-liquid valves	×	Fraction of sources operated on	=	# leaks	×	Repair time (hr)	×	Labor rate ($/hr)	=	Leak repair cost ($/yr)
Quarterly:	1	×	0.1867	=	0.187	×	1.13	×	15.50	=	3.27
Monthly:	1	×	0.1909	=	0.191	×	1.13	×	15.50	=	3.34

[j] 0.40 × (monitoring cost + leak repair cost).

[k] Recovery credit is based on the value of benzene ($350/Mg) and the benzene emission reduction. For Models 1 and 2 which do not refine light oil to benzene, this is equivalent to using a value of $245/Mg for additional light oil recovery.

[l] Total annual cost (before credit)--recovery credit.

[m] For light-liquid valves, the LDAR model estimates percent reduction in mass emissions. The emission factor for light-liquid valves is derived from refinery data (Docket No. A-79-27-II-A-30, p. 266).

Inspection interval	Emission factor (kg/day)	×	% reduction	×	Conversion to Mg/yr	=	Total VOC emission reduction (Mg/yr)	Benzene emission reduction (Mg/yr) Model A	Benzene emission reduction (Mg/yr) Model B
Quarterly:	0.26	×	0.627	×	0.365	=	0.060	0.042	0.052
Monthly:	0.26	×	0.725	×	0.365	=	0.069	0.048	0.059

For sealed-bellows valves, an emission factor of 0.26 kg/day and 100 percent control efficiency are used.

[n] Benzene emission reduction and cost-effectiveness estimates are presented for each model unit, based on the percentage of benzene in each process: Models 1 and 2 = 70 percent benzene; Model 3 = 86 percent benzene.

[o] Obtained by dividing net annualized cost by total VOC or benzene emission reductions.

[p] Weighted average cost effectiveness for existing model units =

$$\frac{\text{Net annual cost (\$/yr) Models 1 and 2} \times \text{Fraction of Models 1 and 2} + \text{Net annual cost (\$/yr) Model 3} \times \text{Fraction of Model 3}}{\text{VOC emission reduction (Mg/yr)} \times \left(\frac{\text{\# of existing Models 1 and 2} \quad \text{\% benzene in 1 and 2}}{\text{\# of existing Models 1 and 2}} + \frac{\text{\# of existing Model 3's} \quad \text{\% benzene in 3}}{\text{\# of existing Model Unit 3's}}\right)}$$

$$= \frac{\text{(39/46) Net annual cost (\$/yr) Models 1 and 2 + (7/46) Net annual cost (\$/yr) Model 3}}{\text{VOC emission reduction (Mg/yr)} \times \frac{39(0.70) + 7(0.86)}{39 + 7}}$$

$$= \frac{\text{(0.85) Net annual cost Models 1 and 2 + (0.15) Net annual cost Model 3}}{\text{VOC emission reduction (Mg/yr)} \times 0.72}$$

TABLE F-2. ANNUALIZED CONTROL COSTS FOR LIGHT-LIQUID PUMPS--EXISTING UNITS[a]
(May 1979 Dollars)

Costs	Quarterly inspections	Monthly inspections	Dual mechanical seals with barrier fluid system and degassing vents[b]
Installed capital cost			
A. Seal	0	0	870
B. Barrier fluid system	0	0	1,530
C. Degassing vents	0	0	4,090
Annualized capital			
A. Control equipment[c]			
1. Dual mechanical seals			
· Seal[d]	0	0	332
· Installation[e]	0	0	48
2. Barrier fluid system	0	0	249
3. Degassing vents[f]	0	0	667
4. Replacement seal[g]	46	49	0
B. Initial leak repair[h]	14	14	0
C. Initial seal replacement[i]	4.7	4.7	0
Annualized operating costs			
A. Maintenance[j]			
1. Dual mechanical seals	0	0	44
2. Barrier fluid system	0	0	37
3. Degassing vents	0	0	205
B. Miscellaneous[k]			
1. Dual mechanical seals	0	0	35
2. Barrier fluid system	0	0	29
3. Degassing vents	0	0	164
C. Labor			
1. Monitoring[l]	17	38	0
2. Leak repair[m]	97	102	0
3. Administrative and support[n]	46	56	0
Annualized cost before credit	225	264	1,810
Recovery credit[o]			
Models 1 and 2	172	200	242
Model 3	210	249	298
Net annualized cost[p]			
Models 1 and 2	53	64	1,570
Model 3	15	15	1,510
Total emission reduction (Mg/yr)			
All VOC's[q]	0.70	0.82	0.99
Benzene			
Models 1 and 2[r]	0.49	0.57	0.69
Model 3[r]	0.60	0.71	0.85
Cost effectiveness ($/Mg)[s]			
VOC's ($/Mg VOC)			
Models 1 and 2	76	78	1,600
Model 3	21	18	1,500
Benzene ($/Mg benzene)			
Models 1 and 2	108	112	2,300
Model 3	25	21	1,800
Weighted average ($/Mg benzene)[t]	94	96	2,200

Footnotes on next page.

[a]All costs and emission reduction estimates are for one light-liquid pump in benzene service.

[b]Letter from J. A. Pearson, The Goodyear Tire and Rubber Company, to J. R. Farmer, U.S. EPA. November 16, 1979. (Docket No. A-79-27-II-D-77) Pump costs from BID I, p. 8-5. Capital costs of retrofitting an existing pump seal = $573 + $297 (installation) = $870.

[c]Cost of monitoring instrument is not included in this analysis.

[d]Annualized cost of dual seal = $573 × 0.58 CRF = $332.

[e]Nineteen hours installation at $15.50 per hour = $295 × 0.163 CRF = $48.

[f]Based on 10-year equipment life and 10 percent interest (CRF = 0.163).

[g]New seal cost is $225 with a 50 percent credit for the old seal. Annual cost = 225 - 1/2(225) = 113 (last quarter 1978). Cost index =

$$\frac{279.6}{266.6} = 1.05 \times 113 = \$119/\text{seal replaced.}$$

For quarterly and monthly monitoring, number of leaks = 0.39 and 0.41, respectively (see footnote m).

[h]Annualized charge for initial leak repairs for inspection program is obtained by: number of leaks per component × repair time × $15.50/hr × 1.4 (overhead) × 0.163 (CRF for initial repair over 10 years at 10 percent interest). Assume 24 percent of pumps leak in initial survey. Initial leak repair is constant for all monitoring intervals; 1 pump × 0.24 leaks/pump × 16 repair hr/leak × $15.50/hr × 1.4 × 0.163 CRF = $13.58.

[i]Initial seal repair cost: percent of pumps initially leaking × replacement seal cost × capital recovery factor (0.24 × $119 × 0.163 = $4.70).

[j]0.05 × capital cost.

[k]0.04 × capital cost.

[l]Monitoring labor cost (from LDAR model):

	# pumps	×	Fraction screened	=	# pumps screened	×	Monitoring* time (hr)	×	Labor rate ($/hr)	=	Monitoring labor cost ($/yr)
Quarterly:	1	×	4	=	4	×	10/60	×	15.50	=	$10
Monthly:	1	×	12	=	12	×	10/60	×	15.50	=	$31
Weekly visual:	1	×	52	=	52	×	0.5/60	×	15.50	=	$7

*Assumes two-person monitoring team per pump.

[m]Leak repair cost (from LDAR model):

	# pumps	×	Fraction of sources operated on	=	# leaks	×	Repair time (hr/leak)	×	Labor rate ($/hr)	=	Leak repair cost ($/yr)
Quarterly:	1	×	0.3943	=	0.39	×	16	×	15.50	=	$97
Monthly:	1	×	0.4080	=	0.41	×	16	×	15.50	=	$102

[n]0.40 × (monitoring cost + leak repair cost).

[o]Recovery credit is based on the value of benzene ($350/Mg) and the benzene emission reduction. For Models 1 and 2 which do not refine light oil to benzene, this is equivalent to using a value of $245/Mg for additional light oil recovery.

[p]Total annual cost (before credit) - recovery credit.

[q]The LDAR model estimates control efficiency (percent reduction in mass emissions) for pumps. The emission factor for pumps is derived from refinery data (Docket No. A-79-27-II-A-30, p. 266).

	Emission factor (kg/day)	×	% reduction	×	Conversion to Mg/yr	=	Total VOC emission reduction (Mg/yr)
Quarterly:	2.7	×	0.709	×	0.365	=	0.70
Monthly:	2.7	×	0.833	×	0.365	=	0.82

*100 percent control efficiency is assumed for dual mechanical pump seal systems.

[r]Benzene emission reduction and cost-effectiveness estimates are presented for each model unit, based on the percentage of benzene in each process: Models 1 and 2 = 70 percent benzene; Model 3 = 86 percent benzene.

[s]Obtained by dividing net annualized cost by total VOC or benzene emission reductions.

[t]Weighted average cost effectiveness for existing model unit =

$$\frac{\text{Net annual cost (\$/yr) Models 1 and 2} \times \text{Fraction of Models 1 and 2} + \text{Net annual cost (\$/yr) Model 3} \times \text{Fraction of Model 3}}{\text{VOC emission reduction (Mg/yr)}}$$

$$\times \frac{\text{\# of existing Models 1 and 2} \quad \text{\% benzene in 1 and 2}}{\text{\# of existing Models 1 and 2}} + \frac{\text{\# of existing Model 3's} \quad \text{\% benzene in 3}}{\text{\# of existing Model Unit 3's}}$$

$$= \frac{\text{(39/46) Net annual cost (\$/yr) Models 1 and 2 + (7/46) Net annual cost (\$/yr) Model 3}}{\text{VOC emission reduction (Mg/yr)}} \times \frac{39(0.70) + 7(0.86)}{39 + 7}$$

$$= \frac{\text{(0.85) Net annual cost Models 1 and 2 + (0.15) Net annual cost Model 3}}{\text{VOC emission reduction (Mg/yr)}} \times 0.72$$

( ) denotes savings.

TABLE F-3. ANNUALIZED CONTROL COSTS FOR EXHAUSTERS--EXISTING UNITS[a]
(May 1979 Dollars)

Costs	Quarterly inspections	Monthly inspections	Degassing reservoir vents
Installed capital cost	0	0	7,300[b]
Annualized capital			
A. Control equipment[c]	0	0	1,190
B. Initial leak repair[d]	12	12	0
Annualized operating costs			
A. Maintenance[e]	0	0	365
B. Miscellaneous[f]	0	0	292
C. Labor			
1. Monitoring[g]	21	62	0
2. Leak repair[h]	22	33	0
3. Administrative and support[i]	17	38	0
Annualized cost before credit	72	145	1,847
Recovery credit--light oil[j]	19	22	35
Net annualized cost[k]	53	123	1,812
Total emission reduction (Mg/yr)[l]			
All VOC's	0.237	0.275	0.43
Benzene (all models)[m]	0.055	0.064	0.10
Light oil	0.079	0.091	0.14
Cost Effectiveness ($/Mg)[n]			
VOC's ($/Mg VOC)	220	450	4,200
Benzene ($/Mg benzene)	960	1,900	18,000

[a]All costs and emission reduction estimates are for one piece of equipment.

[b]Cost per seal. From: Emission Control Options for the Synthetic Organic Chemicals Manufacturing Industry. Fugitive Emissions Report. Hydroscience. February 1979. Cost updates from Chemical Engineering. Economic Indicators, 86(16):7. July 30, 1979. Costs have same basis as pump seals with a single compressor seal connected to a vent. The compressor seal area could be vented directly to a control device at similar cost.

[c]Based on 10-year equipment life and 10 percent interest (CRF = 0.163).

[d]Annualized charge for initial leak repairs for inspection program is obtained by: number of leaks per component × repair time × $15.50/hr × 1.4 (overhead) × 0.163 (CRF for initial repair over 10 years at 10 percent interest). Test data found 8.8 percent of exhausters leaking in initial survey. Initial leak repair is constant for all monitoring intervals.

$$1 \text{ exhauster} \times 0.088 \text{ leaks/exhauster} \times 40 \text{ repair hr/leak}$$
$$\times \$15.50/\text{hr} \times 1.4 \times 0.163 \text{ (CRF)} = \$12/\text{yr}.$$

[e]0.005 × capital cost.

[f]0.04 × capital cost.

Footnotes from Table F-3. (continued)

[g]Monitoring labor cost:

	No. Exhausters	×	No. of inspectors	×	Monitoring time (hr)	×	Monitoring frequency (times/yr)	×	Labor rate ($/hr)	=	Monitoring labor cost ($/yr)
Quarterly	1	×	2	×	10/60	×	4	×	15.5	=	21
Monthly	1	×	2	×	10/60	×	12	×	15.5	=	62

[h]Leak repair cost:

	No. exhausters	×	Fraction*	=	No. Leaks	×	Repair time	×	Labor rate	=	Leak repair cost ($/yr)
Quarterly	1	×	(0.088)(0.01)(4)	=	0.035	×	40	×	15.5	=	22
Monthly	1	×	(0.088)(0.05)(12)	=	0.053	×	40	×	15.5	=	33

*Assumes 5 percent of leaks initially detected are found with monthly monitoring, assumes 10 percent for quarterly monitoring.

[i]0.4 × (monitoring cost + repair cost).

[j]Light oil recovery credit is $245/Mg and is equivalent to $350/Mg benzene. (Light oil is approximately 70 percent benzene.)

[k]Total annual cost (before credit)-recovery credit.

[l]The uncontrolled emission factor is 1.2 kg VOC/day based on data from compressors primarily in hydrogen service. Analysis of coke oven emissions showed that 23.5 percent of the VOC was benzene. Emission reductions of 55, 64, and 100 percent are estimated for quarterly, monthly, and degassing reservoir vents, respectively, and are based on the ABCD and LDAR models described in Chapter 4.

[m]Models 1, 2, and 3 are equivalent in benzene concentration for this emission source.

[n]Obtained by dividing net annualized cost by the emission reduction achieved.

TABLE F-4. ANNUALIZED CONTROL COSTS FOR PRESSURE RELIEF DEVICES--EXISTING UNITS[a]
(May 1979 Dollars)

Costs	Control technique			
			Rupture disk system	
	Quarterly inspections	Monthly inspections	Block valve	Three-way valve
Installed capital cost	0	0	3,310[b]	4,380[c]
Annualized capital				
A. Control equipment[d]	0	0	620[e]	800[e]
B. Initial leak repair	0	0	0	0
Annualized operating costs				
A. Maintenance[f]	0	0	170	220
B. Miscellaneous[g]	0	0	130	180
C. Labor				
1. Monitoring[h]	17	50	0	0
2. Leak repair	0	0	0	0
3. Administrative and support[i]	7	20	0	0
Total annualized cost before credit	24	70	920	1,200
Recovery credit				
Models 1 and 2[j]	154	182	347	347
Model 3[j]	189	224	427	427
Net annualized cost[k]				
Models 1 and 2	(130)	(112)	573	853
Model 3	(165)	(154)	493	773
Total emission reduction (Mg/yr)[l]				
All VOC's	0.63	0.74	1.42	1.42
Benzene[m]				
Models 1 and 2	0.44	0.52	0.99	0.99
Model 3	0.54	0.64	1.22	1.22
Cost effectiveness ($/Mg)[n]				
VOC's ($/Mg VOC)				
Models 1 and 2	(210)	(150)	404	600
Model 3	(260)	(210)	350	540
Benzene ($/Mg benzene)				
Models 1 and 2	(295)	(215)	579	862
Model 3	(305)	(240)	404	634
Weighted average ($/Mg benzene[o]	(300)	(220)	550	820

[a]All costs and emission reduction estimates are for one piece of equipment in benzene service.

[b]Refinery CTG. June 1978. p. 4-6. Cost update from: Economic Indicators. Chemical Engineering. 86(16):7. July 30, 1979.

[c]Memo from Cole, D. G., PES, Inc., to Hustvedt, K. C., U.S. EPA. Estimated Costs for Rupture Disk System with a 3-way valve. July 29, 1981 (Docket No. A-80-44-II-B-35). Costs were adjusted to reflect May 1979 dollars.

[d]Cost of monitoring instrument is not included in this analysis.

[e]Obtained by multiplying capital recovery factor (2 years, 10 percent interest = 0.58) by capital cost for rupture disk and capital recovery factor (10 years, 10 percent interest = 0.163) by capital cost for all other equipment (rupture disk holder, piping, valves, and pressure relief valve).

[f]0.05 × capital cost.

[g]0.04 × capital cost.

Footnotes from Table F-4. (continued)

[h]Monitoring labor hours (i.e., # workers × # components × time to monitor × times monitored per year) × $15.50 per hour. Assumes two-man monitoring team per relief valve, 8 minutes monitoring time per valve, monitored quarterly or monthly.

[i]0.40 × (monitoring cost + leak repair cost).

[j]Recovery credit is based on the value of benzene ($350/Mg) and the benzene emission reduction. For Models 1 and 2 which did not refine light oil to benzene, this is equivalent to using a value of $245/Mg for additional light oil recovery.

[k]Total annual cost (before credit)-recovery credit.

[l]VOC emission reduction is based on an uncontrolled emission factor of 3.9 kg/day. Control efficiencies of 44, 52, and 100 percent were used for quarterly inspections, monthly inspections, and equipment, respectively, and are based on the ABCD and LDAR model discussed in Chapter 4.

[m]Benzene emission reduction and cost-effectiveness estimates are presented for each model unit, based on the percentage of benzene in each process: 1 and 2 = 70 percent benzene; 3 = 86 percent benzene.

[n]Obtained by dividing net annualized cost by total VOC or benzene emission reductions.

[o]Weighted average cost effectiveness for existing model units =

$$\frac{\text{Net annual cost (\$/yr) Models 1 and 2} \times \text{Fraction of Models 1 and 2} + \text{Net annual cost (\$/yr) Model 3} \times \text{Fraction of Model 3}}{\text{VOC emission reduction (Mg/yr)}} \times \frac{\frac{\text{\# of existing Models 1 and 2} \quad \text{\% benzene in 1 and 2}}{\text{\# of existing Models 1 and 2}} + \frac{\text{\# of existing Model 3's} \quad \text{\% benzene in 3}}{\text{\# of existing Model Unit 3's}}}{}$$

$$= \frac{\text{(39/46) Net annual cost (\$/yr) Models 1 and 2 + (7/46) Net annual cost (\$/yr) Model 3}}{\text{VOC emission reduction (Mg/yr)}} \times \frac{39(0.70) + 7(0.86)}{39 + 7}$$

$$= \frac{\text{(0.85) Net annual cost Models 1 and 2 + (0.15) Net annual cost Model 3}}{\text{VOC emission reduction (Mg/yr)}} \times 0.72$$

TABLE F-5. ANNUALIZED CONTROL COSTS FOR OPEN-ENDED LINES--EXISTING UNITS[a]
(May 1979 Dollars)

Costs	Control technique: Caps on open end
Installed capital cost[b]	50
Annualized capital	
A. Control equipment[c]	8
B. Initial leak repair	0
Annualized operating costs	
A. Maintenance[d]	3
B. Miscellaneous[e]	2
C. Labor	
1. Monitoring	0
2. Leak repair	0
3. Administrative and support	0
Total annualized cost before credit	13
Recovery credit	
Models 1 and 2[f]	4.90
Model 3	5.95
Net annualized cost[g]	
Models 1 and 2	8.10
Model 3	7.05
Total emission reduction (Mg/yr)	
All VOC's[h]	0.020
Benzene[i]	
Models 1 and 2	0.014
Model 3	0.017
Cost effectiveness ($/Mg)[j]	
VOC's ($/Mg VOC)	
Models 1 and 2	405
Model 3	353
Benzene ($/Mg benzene)	
Models 1 and 2	579
Model 3	415
Weighted average ($/Mg benzene)[k]	550

[a]All costs and emission reduction estimates are for one piece of equipment in benzene service.

[b]Emissions Control Options for the Synthetic Organic Chemicals Manufacturing Industry. Fugitive Emissions Report. Hydroscience. February 1979. (Cost updates from: Chemical Engineering. Economic Indicators. April 23, 1979 and July 30, 1979).

[c]Based on 10-year equipment life and 10 percent interest (CRF = 0.163).

[d]0.05 × capital cost.

Footnotes from Table F-5. (continued)

[e]0.04 × capital cost.

[f]Recovery credit is based on the value of benzene ($350/Mg) and the benzene emission reduction. For Models 1 and 2 which do not refine light oil to benzene, this is equivalent to using a value of $245/Mg for additional light oil recovery.

[g]Total annual cost (before credit)--recovery credit.

[h]VOC emission reduction is based on an uncontrolled emission factor of 0.055 kg/day and assumes 100 percent control efficiency for caps.

[i]Benzene emission reduction and cost-effectiveness estimates are presented for each model unit, based on the percentage of benzene in each process: 1 and 2 = 70 percent benzene; 3 = 86 percent benzene.

[j]Obtained by dividing net annualized cost by total VOC or benzene emission reduction.

[k]Weighted average cost effectiveness for existing model units =

$$\frac{\text{Net annual cost (\$/yr) Models 1 and 2} \times \text{Fraction of Models 1 and 2} + \text{Net annual cost (\$/yr) Model 3} \times \text{Fraction of Model 3}}{\text{VOC emission reduction (Mg/yr)} \times \dfrac{\text{\# of existing Models 1 and 2} \times \text{\% benzene in 1 and 2} + \text{\# of existing Model 3's} \times \text{\% benzene in 3}}{\text{\# of existing Models 1 and 2} + \text{\# of existing Model Unit 3's}}}$$

$$= \frac{\text{(39/46) Net annual cost (\$/yr) Models 1 and 2 + (7/46) Net annual cost (\$/yr) Model 3}}{\text{VOC emission reduction (Mg/yr)} \times \dfrac{39(0.70) + 7(0.86)}{39 + 7}}$$

$$= \frac{\text{(0.85) Net annual cost Models 1 and 2 + (0.15) Net annual cost Model 3}}{\text{VOC emission reduction (Mg/yr)} \times 0.72}$$

TABLE F-6. ANNUALIZED CONTROL COSTS FOR SAMPLING CONNECTIONS--EXISTING PLANTS[a]
(May 1979 Dollars)

Costs	Control technique: Closed-purge sampling systems
Installed capital cost[b]	480
Annualized capital	
A. Control equipment[c]	78
B. Initial leak repair	0
Annualized operating costs	
A. Maintenance[d]	24
B. Miscellaneous[e]	19
C. Labor	
1. Monitoring	0
2. Leak repair	0
3. Administrative and support	0
Total annualized cost before credit	121
Recovery credit	
Models 1 and 2[f]	32
Model 3	39
Net annualized cost[g]	
Models 1 and 2	89
Model 3	82
Total emission reduction (Mg/yr)	
All VOC's[h]	0.13
Benzene[i]	
Models 1 and 2	0.092
Model 3	0.11
Cost effectiveness ($/Mg)[j]	
VOC's ($/Mg VOC)	
Models 1 and 2	685
Model 3	631
Benzene ($/Mg benzene)	
Models 1 and 2	967
Model 3	745
Weighted average ($/Mg benzene)[k]	940

[a]All costs and emission reduction estimates are for one piece of equipment in benzene service.

[b]Hydroscience, Inc. Emissions Control Options for the Synthetic Organic Chemicals Manufacturing Industry. Fugitive Emissions Report. For U.S. EPA. February 1979. Costs were updated to reflect May 1979 dollars using: Economic Indicators, Chemical Engineering. 86(9):7, April 23, 1979 and 86(16):7, July 30, 1979.

[c]Based on 10-year equipment life and 10 percent interest (CRF = 0.163).

[d]0.05 × capital cost.

Footnotes for Table F-6. (continued)

[e] 0.04 × capital cost.

[f] Recovery credit is based on the value of benzene ($350/Mg) and the benzene emission reduction. For Models 1 and 2 which do not refine light oil to benzene, this is equivalent to using a value of $245/Mg for additional light oil recovery.

[g] Total annual cost (before credit)--recovery credit.

[h] VOC emission reduction is based on an uncontrolled emission factor of 0.36 kg/day and assumes 100 percent control efficiency for closed-sampling systems.

[i] Benzene emission reduction and cost-effectiveness estimates are presented for each model unit, based on the percentage of benzene in each process: 1 and 2 = 70 percent benzene; 3 = 86 percent benzene.

[j] Obtained by dividing net annualized cost by total VOC or benzene emission reductions.

[k] Weighted average cost effectiveness for existing model units =

$$\frac{\text{Net annual cost (\$/yr) Models 1 and 2} \times \text{Fraction of Models 1 and 2} + \text{Net annual cost (\$/yr) Model 3} \times \text{Fraction of Model 3}}{\text{VOC emission reduction (Mg/yr)} \times \dfrac{\text{\# of existing Models 1 and 2} \times \text{\% benzene in 1 and 2} + \text{\# of existing Model 3's} \times \text{\% benzene in 3}}{\text{\# of existing Models 1 and 2} + \text{\# of existing Model Unit 3's}}}$$

$$= \frac{\text{(39/46) Net annual cost (\$/yr) Models 1 and 2} + \text{(7/46) Net annual cost (\$/yr) Model 3}}{\text{VOC emission reduction (Mg/yr)} \times \dfrac{39(0.70) + 7(0.86)}{39 + 7}}$$

$$= \frac{\text{(0.85) Net annual cost Models 1 and 2} + \text{(0.15) Net annual cost Model 3}}{\text{VOC emission reduction (Mg/yr)} \times 0.72}$$

have a benzene concentration of 70 percent, and the process streams at Model Plant 3 are assumed to have an average concentration of 86 percent benzene.

The origin of the emission estimates is provided in Chapter 3, and control techniques and efficiencies are discussed in Chapter 4. Total costs for the model plants and nationwide costs are summarized in Chapter 8 and are based on the cost analysis presented in Table F-1 through F-6.

F.2 COST ESTIMATE FOR AN OPERATING BY-PRODUCT COKE PLANT[1 2]

A survey and a field inspection were conducted at an operating by-product coke plant to examine site-specific factors that may affect gas blanketing costs. The purpose was to develop a detailed cost estimate for retrofitting a coke oven gas blanketing system, which had been applied at other by-product plants, in a plant without a gas blanketing system.

The coke plant that was inspected was constructed between 1952 and 1953 and is widely spaced compared to some older by-product plants. The effect of widely spaced process units on costs is twofold, and the effects would tend to balance when compact plants are considered. One effect is that there is more than adequate room for installing the required equipment, and the other balancing effect is that piping runs tend to be longer and more costly than are those required in more compact plants.

Because the designated sources of benzene emissions are at widely spaced locations, a single, unified control system covering all the sources would not be cost effective. Geographically, the sources are grouped in five individual locations, and each location has its own site-specific problems and requirements. Each location was studied individually, and drawings were prepared for control systems at each site.[3]

The most logical routes for new vent piping were within existing pipe aisles. This location provided a cost advantage in installation because the new piping could be suspended from existing pipe supports

and gas mains. Another advantage is that the mass of piping, especially of larger diameter, protects against damage from moving vehicles such as cranes.

Venting rates are based on test data obtained from similar sources at other by-product plants. A conservative approach taken when pipe diameters were sized to produce a preliminary cost estimate ensured a substantially adequate system. The following subsections discuss the cost assumptions and describe the proposed control options.

F.2.1 Cost References and Cost Assumptions

Piping costs were obtained from Reference 4 (Mechanical and Electrical Cost Data by M. S. Mossman) for welded piping; flanged piping; steam tracing, drains, and vents; insulation; and labor rates for various trades. The new vent piping is assumed to be all welded construction except for welded flanges to accommodate valves and piping specialties, and flanged piping that is used in the light-oil plant. In general, the new piping is suspended from existing structural supports by use of welded brackets, support rods, and split rings.

Unit prices for labor and material were increased approximately 14 percent to convert to 1982 dollars. An additional 15 percent was applied to labor costs to cover installation in an area where operations may interfere with work progress. The low adder to labor is appropriate where pipe runs are readily accessible by mobile crane and adequate working room is available. In a more crowded by-product plant, labor interference may be greater; however, the increased labor cost would be offset by shorter piping runs.

Flanged pipe is used in the light-oil plant because of welding restrictions in a hazardous area. Sections of pipe are prefabricated and carried into the plant for erection. Installation labor costs were increased by 85 percent to cover the extra work and precautions required in a hazardous area. Additional pipe supports, bolted to new concrete foundations, are included for blanketing the light-oil condenser and light-oil storage tank.

Steam tracing is 0.5-in.-diameter pipe with screw connections in the light-oil plant and welded construction in other areas. Pipe insulation is fiberglass with a stainless steel jacket.

Reference 5 (National Construction Estimator, 1981) provided unit prices of labor and materials for various types of steel construction as well as unit prices for bolts and welding. These unit costs were applied to the construction of seals and covers for the tar and primary cooler decanters. Cost data for pressure taps into gas lines were supplied by the Mueller Company and include material and labor for the stopper fitting, rental and transportation of the tapping machine, crane rental, and supervision.

F.2.2 System Number 1--Flushing-Liquor Decanter

The flushing-liquor decanters and circulation tank are located at the end of the coke battery several hundred feet from the main by-product recovery plant. The emission sources for this location are listed below.

Source	Dimensions	Estimated vent rate (acfm)
Flushing-liquor decanter 1	20 ft × 45 ft × 11.8 ft	415
Flushing-liquor decanter 2	20 ft × 45 ft × 11.8 ft	415
Tar-collecting tank 1	11 ft diameter × 36 ft long	183
Tar-collecting tank 2	11 ft diameter × 36 ft long	183
Circulating tank	11 ft diameter × 36 ft long	183

The three tanks are horizontal and welded with dished heads, while the decanters are rectangular with sides and bottoms made of reinforced steel. The decanter top is made of concrete slabs on steel support beams and is sealed by tar joints. Excessive pressure may tend to lift the concrete slabs and break the tar joints; therefore, a new cover may be required to apply a gas blanket.

Emission control is provided by a blanket of coke oven gas from a connection upstream of the Askania regulator for Battery Number 1. The normal gas pressure at this point is 5 mm of water and is limited to 15 mm of water by means of a low-pressure gas bleeder. The existing atmospheric vents are 6-in. in diameter and are tied into the main

header, which is 8-in. in diameter (see Table F-7). For the 8-in. line size, the gas pressure in the decanter will not exceed 7 in. of water under maximum venting conditions from all tanks.

The 8-in. main vent line follows and is supported from the existing 18-in. flushing-liquor line. Three-way plug valves are provided for isolating each source from the gas blanket, and 2 in. of fiberglass insulation is included. Each decanter will be provided with a seal plate near the discharge end of the conveyor (see Table F-8). The plate will be bolted to the supporting steel for the concrete top and to the sidewalls and will extend below the liquid surface to provide a gas seal.

F.2.3 System Number 2--Primary Cooler Decanters and Tar Dehydrators

Two decanters and tar dehydrators are located side by side at the primary cooler with the dimensions given below:

Source	Dimensions	Estimated vent rate (acfm)
Primary cooler decanter 1	11 ft × 48 ft × 11.8 ft high	248
Primary cooler decanter 2	11 ft × 48 ft × 11.8 ft high	248
Tar dehydrator, west	10 ft diameter × 25 ft long	525
Tar dehydrator, east	10 ft diameter × 25 ft long	157

The proposed control technique is to blanket the vessel with its own vapors slightly above atmospheric pressure. The system requires 6-in. vent piping, steam tracing, and insulation as described in Subsection F.2.2 and in Table F-9. Vent connections are made from the tanks to the inlet of the primary cooler where the gas pressure is -30 in. of water (-45 in., maximum). Two pressure control stations, one operating and one standby, are provided between the emission sources and the coke oven gas line. The purpose of the control station is to maintain an essentially zero (atmospheric) pressure for the gas blanket within the tar dehydrators and primary cooler decanters. Condensation and fouling are minimized by steam tracing, insulation, steamout and drain connections, Teflon®-lined butterfly control valves, and chemical seals at the pressure tap. Alarms are provided to indi-

TABLE F-7. SYSTEM # 1--VENT FOR FLUSHING-LIQUOR DECANTER

Description	Quantity		Cost material		Cost labor		Total cost
	Unit	Total	Unit	Total	Unit	Total	
Decanter seal plates and repairs to top (see Table F-8)		2					15,600
8-in. pressure tap into gas main (see Table F-8)		1					3,250
8-in. vent pipe - plug valve		1		810	205	210	1,020
- straight pipe	linear ft	530	20.75	11,000	21.35	11,310	22,310
- 90° ells		2	121	240	131	260	500
- 45° ells		3	77	230	121	360	590
- tees		4	177	710	216	860	1,570
- reducers		1	75	80	118	120	200
- flanges		2	113	230	76	150	380
6-in. vent pipe - 3-way plug valves		5	1,440	7,200	220	1,100	8,300
- straight pipe	linear ft	150	16.00	2,400	17.24	2,590	4,990
- 90° ells		10	76	760	106	1,060	1,820
- tees		4	98	390	177	710	1,100
- flanges		24	70	1,680	54	1,540	3,220
1/2-in. schedule 80 pipe - valves		8	17	140	7	60	200
- straight pipe		900	1.24	1,120	2.66	2,390	3,510
- steam traps		2	33	70	13	30	100
Pipe insulation - 8 in. diameter × 2 in. thick, stainless jacket straight sections	linear ft	530	12.50	6,630	14.50	7,690	14,320
- valves and fittings (× 3)	linear ft	40	12.50	500	14.50	580	1,080
- 6 in. diameter × 2 in. thick, stainless jacket straight sections	linear ft	150	10.30	1,550	10.38	1,560	3,110
- valves and fittings (× 3)	linear ft	75	10.30	780	10.38	780	1,560
- ½ in. diameter × 1 in. thick	linear ft	220	.59	130	1.27	280	410
TOTAL							89,140
Engineering (7%) and Contingency (10%)							15,200
Overhead and Profit (25%)							26,060
						TOTAL	130,400

TABLE F-8. DECANTER--WATER SEAL AND COVERS

Item	Description	Quantity Unit	Quantity Total	Cost material Unit	Cost material Total	Cost labor Unit	Cost labor Total	Total cost
Seal plate	Seal plate - schedule 18 × 42.7 in./ft - 20 ft. long	lb	854		260		260	520
	Clip angles - 4 in. × 4 in. × 3/8 in. - 18 in. long[a] 2 required	lb	30		20		40	60
	Bolts @ 6 in. diameter 46 @ $3 + drilling $10 each							600
	Gaskets							30
	Welding--1/4-in. fillet	linear ft	6					40
	Remove concrete planks (4) 12 ft × 20 ft × 4 in. thick	ft^3	80				1,000	1,000
	Clean tank in work area	Personhours	120				2,500	2,500
	Replace planks and seal with tar	ft^3	80				1,500	1,500
				Per tank				$6,250
Openings in tank top	Plates (3) 24 in. × 26 in. × 3/8 in.	lb	270		120			120
	Bolts @ $3 + drilling $10 each	No.	54					700
	Gaskets							60
	Clean surfaces of tar	Personhours	16					220
	Hand holds							150
								1,250
Weir control	Remove and blank opening							300
	Total cost per decanter							7,800
	2 decanters						TOTAL	$15,600
8-in. pressure tap	1/3 of rental for Mueller tapping machine, crane, and supervision							1,500
	Labor 3 hr for 4 men							350
	Fittings							1,400
							TOTAL	3,250

[a]Bolt to sides of decanter and to existing tee beams.

TABLE F-9. SYSTEM #2--VENTS FOR PRIMARY COOLER DECANTER AND TAR DEHYDRATOR

Description	Quantity		Cost material		Cost labor		Total cost
	Unit	Total	Unit	Total	Unit	Total	
Replace concrete tops of decanters with steel		2					32,000
6-in. vent pipe - 3-way plug valves		4	1,400	5,760	220	880	6,640
- 2-way plug valves		5	450	2,250	170	850	3,100
- straight pipe	linear ft	128	16.00	2,050	17.24	2,200	4,250
- 90° ells		7	76	530	106	740	1,270
- tees		5	98	500	177	890	1,390
- flanges		26	70	1,820	54	1,400	3,220
6-in. pressure tap		1					2,800
Control station includes 2 each valves with actuator and positioner, transmitter, and chemical seal 1 each controller and alarms		1					12,600
1/2-in. schedule 80 pipe - valves		10	17	170	7	70	240
- straight pipe	linear ft	190	1.24	240	2.66	510	750
- steam trap		1	33	30	13	10	40
Pipe insulation - 6 in. diameter × 2 in. thick, stainless jacket	linear ft	128	10.30	1,320	10.38	1,330	2,650
- straight sections							
- valves and fittings (× 3)	linear ft	69	10.30	710	10.38	720	1,430
- 1/2 in. diameter × 1 in. thick	linear ft	45	.59	30	1.27	60	90
Valve operating platform (4 ft × 8 ft) and ladder (30 ft)							5,300
6-in. emergency relief vent		1	890	890	100	100	990
Total							$78,760
Engineering (7%) and Contingency (10%)							13,390
Overhead and profit (25%)							23,050
							$115,200

cate abnormal pressure conditions. For additional safety, the concrete decanter top is removed and a new welded steel plate is sealed to the decanter top (see Table F-10).

F.2.4 System Number 3--Tar Storage Tanks

The system proposed for controlling emissions from the tar storage tanks (see Table F-11), which are remotely located from the main plant, is a wash-oil scrubber. The two tar storage tanks are 65 ft in diameter and 40 ft in height with an estimated vent rate of 310 acfm.

The vent gases enter the scrubber's base through 6-in. lines and flow upward, countercurrent to the wash-oil spray. Debenzolized wash oil is sprayed into the top of a scrubber with dimensions of 1.5 ft in diameter and 16 ft in length. A 1-in. line supplies 4.4 gal/min of wash oil from the wash-oil supply line. The spray chamber is partially elevated above one of the tar storage tanks to allow gravity flow through a 1.25-in. return line to the base of the light-oil scrubbing tower. All lines are heat traced and insulated to prevent condensation.

F.2.5 System Number 4--Ammonia Liquor Tanks

The plant has five storage tanks for ammonia liquor, three for phenolized ammonia liquor (each 30 ft in diameter and 32 ft in height), and two for dephenolized ammonia liquor (38 ft and 34 ft in diameter; both 32 ft in height). No data are available on measured vent rates, but the rates are expected to be low because the ammonia liquor contains mostly water at close to ambient temperatures. The tanks are filled by pumps rated at 100 gal/min; therefore, the maximum emission rate is estimated as approximately 15 ft^3/min for each tank.

The proposed gas blanketing system is comprised of three-way valves and 4-in. vent pipes at each tank with connections to a 6-in. pipe to the gas line at the gas holder. The gas pressure in the holder is normally 15 in. of water and will not exceed 18 in. of water without blowing the water seals. Steam tracing and insulation are provided to avoid condensation or freezing in the vent lines. The tap into the gas line is 8 in. to provide a common connection for the light-oil plant's system, which is described in the following subsection. This tap is made under pressure, and a new valve-operating platform is provided for access (see Table F-12).

TABLE F-10. SYSTEM: #2--REPLACE TOP OF PRIMARY COOLER DECANTER WITH STEEL (PER DECANTER)

Description	Quantity		Cost material		Cost labor		Total cost
	Unit	Total	Unit	Total	Unit	Total	
Blank valves and remove existing concrete top	Personhours	120		250		1,750	2,000
Clean tank interior							5,000
Top plates (6) 8 ft 1 in. × 11 ft. 6 in. × 7/16	lb	10,920		2,730			2,730
Support beams 11.0 lb/ft × 11 ft. 2 in. long--16 required	lb	1,970		590			590
Lay out, cut to size, and weld in place	Personhours	144					2,660
Provide openings with bolted and gasketed covers							
Opening 4 ft 9 in. × 6 ft 0 in.--1 required	lb	1,200		400			400
Lay out, cut, weld, and bolt in place	Personhours	48				880	880
Opening 2 ft 0 in. × 3 ft 0 in.--2 required	lb	570					570
Lay out, cut, weld, and bolt in place	Personhours	40				740	740
6-in. flanged vent pipe							430
TOTAL							16,000

TABLE F-11. SYSTEM #3--TAR STORAGE TANKS

Description	Quantity Unit	Quantity Total	Cost material Unit	Cost material Total	Cost labor Unit	Cost labor Total	Total cost
Spray scrubber - 18 in. diameter × 16 ft high		1		750		780	1,530
6-in. vent pipe - straight pipe	linear ft	70	16.00	1,120	17.24	1,210	2,330
- 90° ells		6	76	460	106	640	1,100
- flanges		8	70	560	54	430	990
1 1/4-in. wash oil - valve		1	100	100	20	20	120
- straight pipe	linear ft	580	2.17	1,260	3.69	2,140	3,400
- 90° ell		6	9.35	60	25.02	300	360
1-in. wash oil - valve		1	65	70	10	10	80
- straight pipe	linear ft	600	1.71	1,030	3.45	2,070	3,100
- 90° ell		7	24	170	35	250	420
1/2-in. schedule 80 - gate valves		5	17	90	7	40	130
- straight pipe		170	1.24	210	2.66	450	660
- steam trap		1	33	30	13	10	40
Pipe insulation - 6 in. diameter × 2 in. thick, stainless jacket	linear ft	70	10.30	720	10.38	730	1,450
- straight section							
- valves and fittings (× 3)	linear ft	20	10.30	20	10.38	20	40
- 1/2 in. diameter × 1 in. thick	linear ft	100	.59	60	1.27	130	190
TOTAL							$15,940
Engineering (7%) and Contingency (10%)							2,710
Overhead and Profit (25%)							4,650
TOTAL							$23,300

TABLE F-12. SYSTEM #4--VENT FOR AMMONIA LIQUOR TANKS

Description	Quantity		Cost material		Cost labor		Total cost
	Unit	Total	Unit	Total	Unit	Total	
8-in. pressure tap		1					3,250
8-in. vent pipe - 2-way plug valve		1		810		210	1,020
- flanges		2	113	230	76	150	380
- tee and reducer		1	252	250	334	330	580
6-in. vent pipe - straight pipe	linear ft	205	16.00	3,280	17.24	3,530	6,810
- reducers		2	42	80	75	150	230
- tees		4	98	390	177	710	1,100
4-in. vent pipe - 3-way plug valves		5	830	4,150	100	500	4,650
- straight pipe	linear ft	140	9.57	1,340	9.17	1,280	2,620
- 90° ells		12	24	290	71	850	1,140
1/2-in. schedule 80 pipe - valves		4	17	70	7	30	100
- straight pipe	linear ft	500	1.24	620	2.66	1,330	1,950
- steam trap		1	33	30	13	10	40
Pipe insulation - 6 in. diameter × 2 in. thick with stainless jacket	linear ft	205	10.30	2,110	10.38	2,130	4,240
- straight section							
- valves and fittings (× 3)	linear ft	20	10.30	210	10.38	210	420
- 4 in. diameter × 1 1/2 in. thick, stainless jacket	linear ft	140	6.56	920	8.50	1,190	2,110
- straight section							
- valves and fittings (× 3)	linear ft	40	6.56	260	8.50	340	600
- 1/2 in. diameter × 1 in. thick	linear ft	160	.59	100	1.27	200	300
Valve operating platform and ladder		1					5,300
1 1/4-in. vent valve		5	130	650	40	200	850
TOTAL							$37,690
Engineering (7%) and Contingency (10%)							6,410
Overhead and profit (25%)							11,000
TOTAL							

F.2.6 Light-oil plant

Emission sources in the light-oil plant are listed below (see Table F-13).

Sources	Dimensions	Estimated vent rate (acfm)
Condenser vent	--	25
Light-oil storage	47 ft diameter × 32 ft high	4
Light-oil receiver	10 ft diameter × 30 ft long	4
Wash-oil circulation	11 ft diameter × 36 ft long	4
Wash-oil decanter	12 ft × 35 ft × 10 ft high	141
Wash-oil recovery	10 ft diameter × 30 ft long	101
Secondary light-oil 1	10 ft diameter × 30 ft long	4
Secondary light-oil 2	10 ft diameter × 30 ft long	4

The gas blanketing is provided by clean coke oven gas from the gas holder. Vent pipes, which are 3 in., 4 in., and 6 in. in diameter, all connect to a common 6-in. header that ties into the 8-in. pressure tap described previously. In general, the vent piping follows the existing steam and wash-oil piping to and from the light-oil plant. The vent line from the light-oil condenser runs along the existing building structure and requires some new pipe supports. New pipe supports also are required for the vent piping, which runs from the light-oil storage tank and receiver back to the 6-in. header.

All of the vent piping within the confines of the light-oil plant will be prefabricated with flanged joints to avoid welding within this area. The steam tracing in this area will have screwed fittings. All of the piping exterior to this area will be provided with welded joints. Insulation is provided in addition to the steam tracing to avoid vapor condensation.

The connection to each source is provided with a flanged three-way valve to isolate the source when desired. This valve is arranged so the tank connects either to the vent system or to the atmosphere through a flame arrestor. There are three access openings into the wash-oil decanter that require new bolted and gasketed covers.

F.2.7 Safety and Operational Aspects[2]

The proposed systems for controlling benzene emissions are based on technology that has been applied successfully at various coke

TABLE F-13. SYSTEM #5--LIGHT-OIL PLANT

Description	Quantity Unit	Quantity Total	Cost material Unit	Cost material Total	Cost labor Unit	Cost labor Total	Total cost
Covers for wash-oil decanter tank		3					2,100
6-in. vent pipe - 3-way plug valve		1	144	1,440	330	330	1,770
- straight pipe, flanged in light-oil plant	linear ft	330	28.60	9,500	27.60	9,100	18,600
- welded in coke plant		510	16.00	8,160	1,724	8,620	16,780
- 90° ells, flanged		3	110	330	85	260	590
- tees, flanged		7	154	1,080	130	910	1,990
4-in. vent pipe - straight pipe, flanged	linear ft	235	16.00	3,760	22.40	5,270	9,030
- 90° ells, flanged		5	71	350	63	320	670
- tees, flanged		2	107	210	100	200	410
- support columns		3					4,500
3-in. vent pipe - 3-way plug valves		7	600	4,200	130	910	5,110
- straight pipe, flanged	linear ft	240	11.57	2,780	19.38	4,650	7,430
- 90° ells, flanged		4	54	220	45	180	400
- reducers, flanged		5	63	320	45	270	590
- support columns		8					12,000
Flame arrestors - 6-in. size		1	1,670	1,670	200	200	1,870
- 3-in. size		5	830	4,150	85	430	4,580
1/2-in. schedule 80 pipe - valves		22	17	370	7	150	520
- straight pipe	linear ft	1,410	1.24	1,750	2.66	3,750	5,500
- steam traps		4	33	120	13	50	170
Pipe insulation - 6 in. diameter × 2in. thick, stainless jacket - straight sections	linear ft	840	10.30	8,650	11.25	9,450	18,100
- valves and fittings (× 3)	linear ft	35	10.30	350	11.25	390	740
- 4 in. diameter × 1 1/2 in. thick, stainless jacket - straight sections	linear ft	235	6.56	1,540	10.20	2,400	3,940
- valves and fittings (× 3)	linear ft	20	6.56	130	10.20	200	330
Pipe insulation - 3 in. diameter × 1 1/2 in. thick, stainless jacket - straight sections	linear ft	240	5.71	1,370	8.74	2,100	3,470
- valves and fittings (× 3)	linear ft	35	5.71	200	8.74	310	510
- 1/2 in. diameter × 1 in. thick	linear ft	100	.59	60	1.27	130	190
TOTAL							$121,980
Engineering (7%) and Contingency (10%)							20,720
Overhead and Profit (25%)							35,700
TOTAL							$178,400

plants. Two general types of technology are employed. One is the use of coke oven gas as a blanket either from the gas holder or from the collecting main. The first has been used at the Sparrows Point Plant for Bethlehem Steel, the Cleveland Plant of Republic Steel, and the Houston Plant of Armco. The second has been used at the Houston Plant of Armco for tar decanters and flushing-liquor circulation tanks. Also at the Houston works is a second type of system that permits venting of various tanks, including ammonia liquor storage, tar dewatering, and tar storage, to the atmosphere through a wash-oil scrubber.

At the Houston works, a negative-pressure system was used for tar-collecting tanks. In this system, the tanks were connected directly to the inlet of the primary cooler without the use of control valves, thereby imposing a negative pressure of -25 inches of water on the tanks. The use of negative coke oven gas pressure on tanks is not unusual. In fact, each by-product plant has a primary cooler, which is in effect a large tank, and every primary cooler operates at negative pressure. The concern is not the existence of negative pressure in the tank, but rather that the tank be designed for this operating condition.

The proposed systems employ various features to maximize safety and to facilitate operations. These are listed below:

1. Three-way Plug Valves. In all systems that control emissions by a coke oven gas blanket, each of the tanks under this control is connected to a common vent pipe by a three-way plug valve. The valve connections are arranged so that in one position the tank is connected to the vent main, and in the other position the tank is connected to the atmosphere. This arrangement permits the vent main and/or the tank(s) to be isolated to perform maintenance operations. It also ensures that the tank is vented at all times. The plug valve, in either position, provides a clear opening for the ready passage of vent vapors and avoids pockets where tar and other deposits may accumulate over time and thereby interfere with opening and closing of the valve.

2. Steam Tracing. All vent piping in the various systems is steam traced and insulated to avoid condensation and accumulation of tar vapors as well as condensation of water vapor. On the basis of experience with this method of keeping the lines warm, there should be little or no problem with accum-

ulations that might eventually plug the lines. Nevertheless, pressure and drain connections are provided in the various pipelines for steaming them out should the need arise.

3. Coke Oven Gas Blanketing. Coke oven gas blanketing is used for various systems as described below.

   a. Coke oven gas at 5 mm of water normal (15 mm, maximum) for gas from the collecting main. An 8-in. vent pipe from the collecting main to the tanks ensures that pressure at the emission source will remain low and that the water seal at the decanter will not be blown. If desired, additional safety could be provided by means of a Protectoseal 6-in. pressure vent, piped to an elevated location, complete with alarm at the upstream end of the 8-in. vent line. This addition would cost $4,300.

   b. Coke oven gas at -30 in. normal (-45 in. maximum) for gas from the inlet of the primary cooler. This system has two pressure control stations, one operating and one standby, between the emission sources and the gas line connection. The purpose of the control station is to maintain an essentially zero atmospheric pressure condition within the emission sources. The control system has valves that are completely Teflon®-lined and pressure taps that have 3-in. diameter chemical seals, all to minimize operational problems due to fouling. In addition, alarms indicate abnormal pressure conditions.

   c. Coke oven gas at 15 in. of water normal (18 in. maximum) from the gas holder. All emission sources in these systems are capable of sustaining the maximum gas pressure. In addition, the quality of the coke oven gas at the holder is such that the maintenance requirements should be extremely limited.

4. Wash-Oil Vent Scrubbers. System Number 3 is vented to the atmosphere through a scrubber that employs debenolized wash oil as the scrubbing medium. In System Number 3, oil is used once through at a flow rate of 4.4 gal/min, which is 1 percent of the wash-oil circulating rate at the coke works.

   The benzenolized wash oil from the vent scrubber is delivered to the existing wash-oil stills for processing and reuse. At other coke plants without such a system, several options would exist for handling the oil from the wash-oil scrubbers. These options include a new small distillation and cooling system in which the benzene vapors would be returned to the coke oven gas main, or the use of Number 2

fuel oil as the absorbing medium, the benzenolized oil being used for combustion in the coke plant or in the steel mill.

Wash-oil scrubbers impose essentially no pressure restrictions on the vent gases. Therefore, they are especially useful in coke plants that have benzene sources in the form of large, old, rivetted tanks. In such plants, there may be concern that blanketing with coke oven gas may be hazardous due to leaks and to structural conditions within the sources. Use of wash-oil scrubbers for these sources avoids the hazard.

5. Alternative Control Methods. As an alternative to the vent scrubber for the coke oven gas blanket, there are conditions under which it may be desirable to use natural gas or nitrogen for blanketing. These latter systems have the disadvantage of requiring a substantially higher degree of control equipment with accompanying higher costs for installation and for maintenance. The nitrogen system, in particular, imposes a further cost because of the gas consumption. Nevertheless, if a plant has pure benzene product storage and handling, it may be necessary to use the systems for those sources to avoid contamination.

6. Light-Oil Plant. In providing the new vent system, flame arrestors were added at five locations that had been operating without them. These are the wash-oil circulating tank, the wash-oil decanter tank, the wash-oil receiver, and the Number 1 and Number 2 secondary light-oil storage tanks. The flame arrestors are used only when the three-way valve is positioned to vent the tanks to atmosphere. Although these tanks have been operating safely without the flame arrestors, it was deemed desirable for the purpose of the study to add them at a cost of $9,500.

An additional cost of $11,300 is imposed by the arrangement of the 6-in. vent header at its north end where it runs parallel to and duplicates the vent header from the ammonia liquor tanks. Elimination of this duplication by means of a common header for both sources would save this expenditure. However, there is a remote possibility that vapors from the ammonia liquor tanks might back upstream into the light-oil plant, thereby contaminating the light-oil products. The provision of parallel headers is a conservative design approach.

In the light-oil plant, the use of gas blanketing will improve the operation safety. At present, when the tanks breathe, air may enter them through the vent pipe and create an explosive mixture within. This possibility is recognized particularly at the light-oil condenser vent where a con-

tinuous steam purge is in operation. Under the new system, there is no possibility of creating this explosive mixture; in addition, the use and cost of the steam purge may be eliminated.

F.3 ESTIMATE OF QUANTITY AND VALUE OF ORGANICS OTHER THAN LIGHT OIL IN BY-PRODUCT PLANT EMISSIONS

The quantity of other organics in by-product plant emissions was estimated from data provided by an environmental assessment of a by-product recovery plant.[6] These data are for a specific plant and limited number of sources and require numerous assumptions to extrapolate to all by-product sources. The available data are summarized in Table F-14. Emissions of other organics are estimated by multiplying the benzene emissions (Chapter 7) by the ratio of other organics concentration to the benzene concentration. Emissions of volatile organic compounds (VOC) are also estimated and include the quantity of total chromatographable organics (TCO, boiling point of 200 to 300° C) and the quantity of light oil (benzene, toluene, and xylene). VOC emissions are estimated by adding light oil emissions (benzene emissions divided by 0.7) and TCO emissions (benzene emissions multiplied by the ratio of TCO concentration to benzene concentration). Emissions of C_1-C_7 hydrocarbons are not included as VOC because the average molecular weight (16 to 22) indicates that this fraction is mostly methane and ethane.

Major assumptions for this analysis are listed below.

1. The environmental assessment data are representative of concentrations in by-product plant emissions.

2. The C_1-C_7 concentration in light oil storage tank emissions is also applicable to emissions from the light-oil plant and light oil sump.

3. The C_1-C_7 concentration in emissions from the primary cooler condensate is also applicable to emissions from the flushing liquor circulation tank and excess ammonia liquor storage.

4. The concentration of organics in emissions from tar storage is also applicable to emissions from tar dewatering.

5. The concentration of organics in emissions from the tar decanter is also applicable to emissions from the tar sump.

TABLE F-14. CONCENTRATION OF ORGANICS IN BY-PRODUCT PLANT EMISSIONS[6]

Source	Concentration (mg/sm^3)			
	Benzene	C_1-C_7[a]	Toluene, xylene and ethylbenzene	TCO[b]
Light-oil storage tank	1,040	225	37	--
Tar decanter	7,283	4,550	900	5,110
Primary cooler condensate	5,230	1,183	900	--
Naphthalene separation	4,700	2,051	600	660
Cooling tower	15.8	2	--	226
Tar storage tank	66	3.7	40	1,450

[a] C_1-C_7 is mostly methane and ethane with an average molecular weight of 16 to 22.

[b] TCO = total chromatographable organics and represents those organics with boiling points between 200° and 300° C.

TABLE F-15. COST EFFECTIVENESS FOR MODEL PLANT 1 WITH CREDIT FOR ALL ORGANICS

Emission source	Control option	Benzene reduction (Mg/yr)	VOC reduction (Mg/yr)	Total credit (thousands 1982 dollars/yr)	Net annualized cost (thousands 1982 dollars/yr	Cost effectiveness ($/Mg)			
						Benzene		VOC	
						Average	Incremental	Average	Incremental
1. Final-cooler cooling tower									
a. Direct-water final cooler cooling tower	1. Use tar-bottom final cooler	112	1,210	215	(184)	(1,600)	(1,600)	(150)	(150)
	2. Use wash-oil final cooler	138	1,620	281	431	3,100	24,000	270	1,500
b. Tar-bottom final cooler cooling tower	1. Use wash-oil final cooler	26	410	66	646	25,000	25,000	1,600	1,600
2. Tar decanter, tar-intercepting sump, and flushing liquor circulation tank	Coke oven gas blanketing system	64	134	42	(7.5)	(120)	(120)	(56)	(56)
3. Tar storage tanks and tar dewatering tanks	1. Wash-oil scrubber	10.8	254	41	3.7	340	340	15	15
	2. Coke oven gas blanketing system	11.8	277	45	(29)	(2,500)	(33,000)	(100)	(1,400)
4. Light-oil condenser, light-oil decanter, wash-oil decanter, and wash-oil circulation tanks	Coke oven gas blanketing system	34.6	49	8.5	13.2	380	380	270	270
5. Excess-ammonia liquor tank	1. Wash-oil scrubber	3.0	4.2	1.4	10.5	3,500	3,500	2,500	2,500
	2. Coke oven gas blanketing system	3.2	4.6	1.6	11.3	3,500	4,000	2,500	2,000
6. Light-oil storage tanks and benzene-mixture storage tanks	1. Wash-oil scrubber	1.9	2.7	0.9	12.9	6,800	6,800	4,800	4,800
	2. Coke oven gas blanketing system	2.1	3.0	0.6	14.4	6,900	7,500	4,800	5,000
7. Light-oil sump	Cover	5.4	7.7	2.7	(1.0)	(190)	(190)	(130)	(130)

TABLE F-16. COST EFFECTIVENESS FOR MODEL PLANT 2 WITH CREDIT FOR ALL ORGANICS

Emission source	Control option	Benzene reduction (Mg/yr)	VOC reduction (Mg/yr)	Total credit (thousands 1982 dollars/yr)	Net annualized cost (thousands 1982 dollars/yr	Cost effectiveness ($/Mg)			
						Benzene		VOC	
						Average	Incremental	Average	Incremental
1. Final-cooler cooling tower									
a. Direct-water final cooler cooling tower	1. Use tar-bottom final cooler	448	4,840	858	(791)	(1,800)	(1,800)	(160)	(160)
	2. Use wash-oil final cooler	550	6,450	1,130	735	1,300	15,000	110	950
b. Tar-bottom final cooler cooling tower	1. Use wash-oil final cooler	102	1,610	272	1,590	16,000	16,000	990	990
2. Tar decanter, tar-intercepting sump, and flushing liquor circulation tank	Coke oven gas blanketing system	256	538	170	(104)	(410)	(410)	(190)	(190)
3. Tar storage tanks and tar dewatering tanks	1. Wash-oil scrubber	43	1,020	164	(56)	(1,300)	(1,300)	(55)	(55)
	2. Coke oven gas blanketing system	47	1,110	178	(118)	(2,500)	(16,000)	(110)	(690)
4. Light-oil condenser, light-oil decanter, wash-oil decanter, and wash-oil circulation tanks	Coke oven gas blanketing system	138	197	34	(3.1)	(22)	(22)	(16)	(16)
5. Excess-ammonia liquor tank	1. Wash-oil scrubber	12	17	5.6	8.0	670	670	470	470
	2. Coke oven gas blanketing system	13	18	6.4	10.7	820	2,700	590	2,700
6. Light-oil storage tanks and benzene-mixture storage tanks	1. Wash-oil scrubber	15	22	7.2	15.4	1,030	1,030	700	700
	2. Coke oven gas blanketing system	17	24	4.2	18.4	1,100	1,500	770	1,500
7. Light-oil sump	Cover	22	31	10.8	(4.2)	(190)	(190)	(140)	(140)

TABLE F-17. COST EFFECTIVENESS FOR MODEL PLANT 3 WITH CREDIT FOR ALL ORGANICS

Emission source	Control option	Benzene reduction (Mg/yr)	VOC reduction (Mg/yr)	Total credit (thousands 1982 dollars/yr)	Net annualized cost (thousands 1982 dollars/yr	Cost effectiveness ($/Mg)			
						Benzene		VOC	
						Average	Incremental	Average	Incremental
1. Final-cooler cooling tower									
a. Direct-water final cooler cooling tower	1. Use tar-bottom final cooler	1,010	10,900	1,930	(1,820)	(1,800)	(1,800)	(170)	(170)
	2. Use wash-oil final cooler	1,240	14,500	2,530	766	620	11,000	53	720
b. Tar-bottom final cooler cooling tower	1. Use wash-oil final cooler	230	3,600	600	2,700	12,000	12,000	750	750
2. Tar decanter, tar-intercepting sump, and flushing liquor circulation tank	Coke oven gas blanketing system	575	1,210	381	(274)	(480)	(480)	(230)	(230)
3. Tar storage tanks and tar dewatering tanks	1. Wash-oil scrubber	98	2,250	363	(175)	(1,800)	(1,800)	(78)	(78)
	2. Coke oven gas blanketing system	106	2,450	395	(319)	(3,000)	(18,000)	(130)	(720)
4. Light-oil condenser, light-oil decanter, wash-oil decanter, and wash-oil circulation tanks	Coke oven gas blanketing system	311	444	77	(35)	(110)	(110)	(79)	(79)
5. Excess-ammonia liquor tank	1. Wash-oil scrubber	27	38	13	6	220	220	160	160
	2. Coke oven gas blanketing system	29	41	15	14	480	4,000	340	2,700
6. Light-oil storage tanks and benzene-mixture storage tanks	1. Wash-oil scrubber	34	49	16	13	380	380	270	270
	2. Coke oven gas blanketing system	37	53	9	21	570	2,700	400	2,000
7. Benzene storage tanks	1. Wash-oil scrubber	17	17	5.7	12	710	710	710	710
	2. Nitrogen gas blanketing system	19	19	2.8	16	840	2,000	840	2,000
8. Light-oil sump	Cover	48	69	24	(11.1)	(230)	(230)	(160)	(160)

6. The recovery credit for organics other than light oil is $150/Mg (1982). This estimate should be conservative based on the comparison given below.

Product	Value ($/Mg)	
Light oil or benzene as fuel	150	(1982)
Crude tar	125	(1979)
Coal tar pitch	250	(1982)
Naphthalene	264	(1979)
Light oil	330	(1982)
Benzene	470	(1982)

7. The control efficiency of a gas blanket is 98 percent and the efficiency of a wash-oil scrubber is 90 percent.

8. The installation of a tar-bottom final cooler for a direct-water final cooler will reduce other organics by the same proportion as the estimated benzene reduction.

9. The installation of a wash-oil final cooler will reduce other organics by the same proportion as the estimated benzene reduction.

The results of this cost analysis are given in Tables F-15 through F-17 for the three model plants. The total credit shown in the tables includes credits for light oil, C_1-C_7 hydrocarbons, and TCO. The net annualized cost was determined by subtracting the total credit from the midrange annualized cost (before credit) given in Chapter 8 for each control option. Parentheses are used to denote savings or net credit for cases where the value of the recovered material is greater than the cost of the control option.

F.4 REFERENCES

1. Trip Report. Fairless Works of U.S. Steel Corporation, Fairless Hills, Pennsylvania. Research Triangle Institute. March 15, 1982.

2. R. Jablin and Associates, Engineering Consultants. "Fairless Works Coke Plant: Control of Benzene Emissions" and "Discussion of Cost Assumptions and System Safety." April 2, 1982. 28 p.

3. Reference 2, Drawing Number RJA-BC001 "General Layout" and RJA-BC002 "Piping Isometrics."

4. Mossman, M.S. Mechanical and Electrical Cost Data. Robert Snow Means, Inc. 1981.

5. National Construction Estimator. Craftsman Book Company. 1982.

6. VanOsdell, D. W., et al. Environmental Assessment of Coke By-product Recovery Plants. U.S. Environmental Protection Agency. Washington, D.C. Publication No. EPA-600/2-79-016. January 1979. p. 84 to 101.

TECHNICAL REPORT DATA
(Please read Instructions on the reverse before completing)

1. REPORT NO. EPA-450/3-83-016a	2.	3. RECIPIENT'S ACCESSION NO.
4. TITLE AND SUBTITLE Benzene Emissions from Coke By-Product Recovery Plants - Background Information for Proposed Standards		5. REPORT DATE May 1984
		6. PERFORMING ORGANIZATION CODE
7. AUTHOR(S)		8. PERFORMING ORGANIZATION REPORT NO.
9. PERFORMING ORGANIZATION NAME AND ADDRESS Office of Air Quality Planning and Standards Environmental Protection Agency Research Triangle Park, North Carolina 27711		10. PROGRAM ELEMENT NO.
		11. CONTRACT/GRANT NO.
12. SPONSORING AGENCY NAME AND ADDRESS DAA for Air Quality Planning and Standards Office of Air and Radiation U.S. Environmental Protection Agency Research Triangle Park, North Carolina 27711		13. TYPE OF REPORT AND PERIOD COVERED Interim Final
		14. SPONSORING AGENCY CODE EPA/200/04

15. SUPPLEMENTARY NOTES

16. ABSTRACT

National emission standards to control emissions of benzene from new and existing coke by-product recovery plants are being proposed under Section 112 of the Clean Air Act. This document contains information on the background and authority, regulatory alternatives considered, and environmental and economic impacts of the regulatory alternatives.

17. KEY WORDS AND DOCUMENT ANALYSIS

a. DESCRIPTORS	b. IDENTIFIERS/OPEN ENDED TERMS	c. COSATI Field/Group
Air pollution Pollution control National emission standards Industrial processes Coke by-product recovery Hazardous air pollutants Benzene Steel industry	Air Pollution Control Benzene Stationary Sources	13B

18. DISTRIBUTION STATEMENT Unlimited	19. SECURITY CLASS *(This Report)* Unclassified	21. NO. OF PAGES 466
	20. SECURITY CLASS *(This page)* Unclassified	22. PRICE

EPA Form 2220-1 (Rev. 4-77) PREVIOUS EDITION IS OBSOLETE