EPA-450/4-84-014d

National Dioxin Study Tier 4 — Combustion Sources

Ash Sampling Program

By
Radian Corporation
Research Triangle Park, NC 27709

Contract No. 68-02-3850
EPA Project Officer: William H. Lamason

U.S. ENVIRONMENTAL PROTECTION AGENCY
Office Of Air And Radiation
Office Of Air Quality Planning And Standards
Research Triangle Park, NC 27711

January 1985

This report has been reviewed by the Office Of Air Quality Planning And Standards, U.S. Environmental Protection Agency, and approved for Publication as received from the contractor. Approval does not signify that the contents necessarily reflect the views and policies of the Agency, neither does mention of trade names or commercial products constitute endorsement or recommendation for use.

EPA-450/4-84-014d

TABLE OF CONTENTS

Section		Page
LIST OF TABLES		vii
LIST OF FIGURES		ix
1.0	INTRODUCTION	1
2.0	OVERVIEW OF THE ASH SAMPLING PROGRAM AND SITE SELECTION CRITERIA	3
	2.1 PROGRAM OVERVIEW	3
	2.2 SELECTION CRITERIA	4
3.0	OVERVIEW OF ASH SAMPLING PROCEDURES	17
4.0	SAMPLING LOCATIONS AND METHODS	19
	4.1 SELECTION OF A SAMPLING LOCATION	19
	4.2 SAMPLE SIZE	23
	4.3 SAMPLING METHODS	23
	4.3.1 Sampling of Ash on Conveyor Belts or in Screw Conveyors	24
	4.3.1.1 ASTM "Stopped-Belt Cut" Method (D2234-76)	24
	4.3.1.2 ASTM "Part-Stream Cut" Method (D2234-76)	29
	4.3.2 Sampling of Ash from Live Storage Hoppers on Control Devices or Bottom Ash Hoppers on Combustion Devices	30
	4.3.3 Sampling of Ash Slurries from Sluices or from Pipes	30
	4.3.3.1 Dipper/Scoop	30
	4.3.3.2 End of Pipe Sampling	31
	4.3.4 Sampling of Ash-Containing Liquids (e.g., Scrubbers)	32
5.0	SITE SPECIFIC DATA NEEDS	35
6.0	SAMPLE CONTROL, PACKAGING, AND SHIPPING	39
	6.1 CONTROL OF ASH SAMPLING KITS	39
	6.1.1 Scheduling of Ash Sampling Kits	41
	6.2 LABELING AND HANDLING OF SAMPLES	42
	6.2.1 Labeling of Samples	42
	6.2.1.1 Specific Label Entries	42
	6.3 SAMPLE CHAIN-OF-CUSTODY RECORD	44
	6.4 SAMPLE SHIPMENT	47
	6.5 SAMPLE CONTAINER PREWASHING	50

LIST OF TABLES

Number		Page
2-1	Tier 4 - Ash Sampling Program (ASP) Activities.	6
2-2	Combustion Source Categories Considered for Tier 4 Sampling Programs (November 1984)	9
2-3	Source Characteristics of Interest for Dioxin Test Program	12
4-1	Recommended Sampling Methods for Ash Sampling	25

LIST OF FIGURES

Number		Page
2-1	Site selection process for the Ash Sampling Program	5
2-2	Source descriptions for potential sampling sites for Tier 4 - National Dioxin Study.	10
4-1	Generic plant with example ash sampling sites	22
4-2	Vacuum ash handling system.	26
4-3	Air pressure ash handling system.	27
4-4	Limestone wet scrubber.	28
4-5	Schematic of tap sampling	33
5-1	Field data to be collected during sampling.	36
5-2	Example ash sampling data needs. Schematic of sampling locations	37
6-1	Example: shipping record tracking	40
6-2a	Chain-of-custody seal	43
6-2b	Sample label.	43
6-3	Source category codes to be used on sample labels	45
6-4	Chain-of-custody form	46
6-5	Sample box identification and markings.	49

1.0 INTRODUCTION

The Environmental Protection Agency's (EPA) Office of Air Quality Planning and Standards (OAQPS) is developing and implementing Tier 4 of the National Dioxin Study. The purpose of Tier 4 is to assess the emissions of dioxins/furans from combustion sources. The term "dioxins/furans" is used generically in this document to mean the tetra- through octa-polychlorinated dibenzo-p-dioxins and the tetra- through octa-polychlorinated dibenzofurans, with specific detection of the isomer 2,3,7,8-tetrachlorodibenzo-p-dioxin (2,3,7,8-TCDD).

The project plan for Tier 4[1] includes a program to collect ash samples from the flue gas of combustion source categories that have a reasonable likelihood of emitting dioxins/furans. The results of this program will provide a qualitative indication of the presence of dioxins/furans in the source emissions. A second use for the results would be to broaden the emission data base if a correlation between ash sample data and stack test data can be developed during full-scale tests.

The purposes of this document are to describe the Ash Sampling Program and to identify the activities that are proposed to be performed by OAQPS, the EPA regional offices, State and local agencies, and the EPA contractor, Radian Corporation. Specific guidance is also provided for the organizations that will perform the field sampling in the program.

The Ash Sampling Program and the site selection criteria are described in Section 2. The procedures to be implemented when a site has been selected for sampling are given in Section 3.

Section 4 describes the criteria for selection of the ash sampling location at the site and the methodology to be used to collect the sample.

---

[1]"National Dioxin Study Tier 4 - Combustion Sources, Project Plan" Air Management Technology Branch, OAQPS/EPA, Research Triangle Park, NC 27711, June 1984.

Section 5 identifies the data that must be collected at the time of sampling, and Section 6 provides specific information regarding sample control, packaging, and shipping.

2.0 OVERVIEW OF THE ASH SAMPLING PROGRAM AND SITE SELECTION CRITERIA

The purpose of the Ash Sampling Program is to broaden the coverage of the Tier 4 sampling effort and to solicit regional inputs concerning additional combustion source categories with the potential to emit dioxins/furans. Ash samples from the flue gas will be obtained from a select group of combustion source categories and will be analyzed for 2,3,7,8-TCDD, tetra- to octa-polychlorinated dibenzo-p-dioxins, and tetra- to octa-polychlorinated dibenzofurans.

Under a separate effort in the source sampling program, the analytical results for ash and flue gas samples will be statistically examined to see if the presence or absence of 2,3,7,8-TCDD, or polychlorinated dioxin/furan homologues in the ash is a meaningful and quantifiable indicator of potential air (i.e., flue gas) emissions of dioxins/furans.

If the results of the comparisons are favorable, then the results of the Ash Sampling Program can be used to broaden the coverage of source categories under Tier 4, and a potentially cheaper method of screening combustion sources for dioxin/furan emissions will have been identified.

The following sections briefly describe the activities to be conducted under the Ash Sampling Program, a schedule for these activities, and a description of the site selection process.

2.1 PROGRAM OVERVIEW

Several parties will be involved in the Ash Sampling Program. These include the OAQPS, with specific direction by the Air Management Technology Branch (AMTB), the EPA regional offices, State and local agencies, Troika*,

*Troika is the collective term for three EPA laboratories (Duluth, Minnesota; Bay St. Louis, Mississippi; and Research Triangle Park, North Carolina or their contractor laboratories) that are providing analytical support.

and Radian Corporation. A schematic of the program is given in Figure 2-1, and a list of activities by responsible organization is given in Table 2-1.

The Ash Sampling Program was initiated by OAQPS in mid-1984 through a letter sent to the regions explaining the purpose of the program and soliciting inputs. An initial list of the candidate sites was provided by the regional offices to OAQPS. These lists have been compiled and reviewed by OAQPS and Radian Corporation. Radian and OAQPS will select two or three sites from each source category for ash sampling. The regions will be notified of the site selection and will be given a sample control number and episode number by OAQPS. Prior to sending out sampling kits, the regions will be contacted to ensure that the type of sample and the sampling location identified are correct. The regions should contact the site to arrange a sampling visit and to verify all site screening information. Radian will send out sample kits to the regions once sample control numbers have been assigned and the type of sample and sampling locations have been specified. These kits will contain sample containers and instructions on sampling and shipping. The regions will conduct the ash sampling following the procedures described in Section 3.0 of this document. Following sampling, the sampler will send the ash samples to Radian where the samples will be prepared for submittal to Troika for analysis. Troika will analyze the samples and submit the results to OAQPS. The results will be compiled and reported in the Tier 4 final report.

2.2 SELECTION CRITERIA

The Agency has already performed an analysis to identify those combustion source categories which have the greatest potential to emit 2,3,7,8-TCDD. This analysis was summarized in the Tier 4 Project Plan and detailed in the report entitled "National Dioxin Study Tier 4 - Combustion Sources. Initial Literature Review and Testing Options."[2] This initial

[2]"Final Report - Review and Evaluation of Available Dioxin Emissions Data and Testing Options for Combustion Sources" Radian Corporation, Under Contract No. 68-02-3513 to EPA, September 28, 1984.

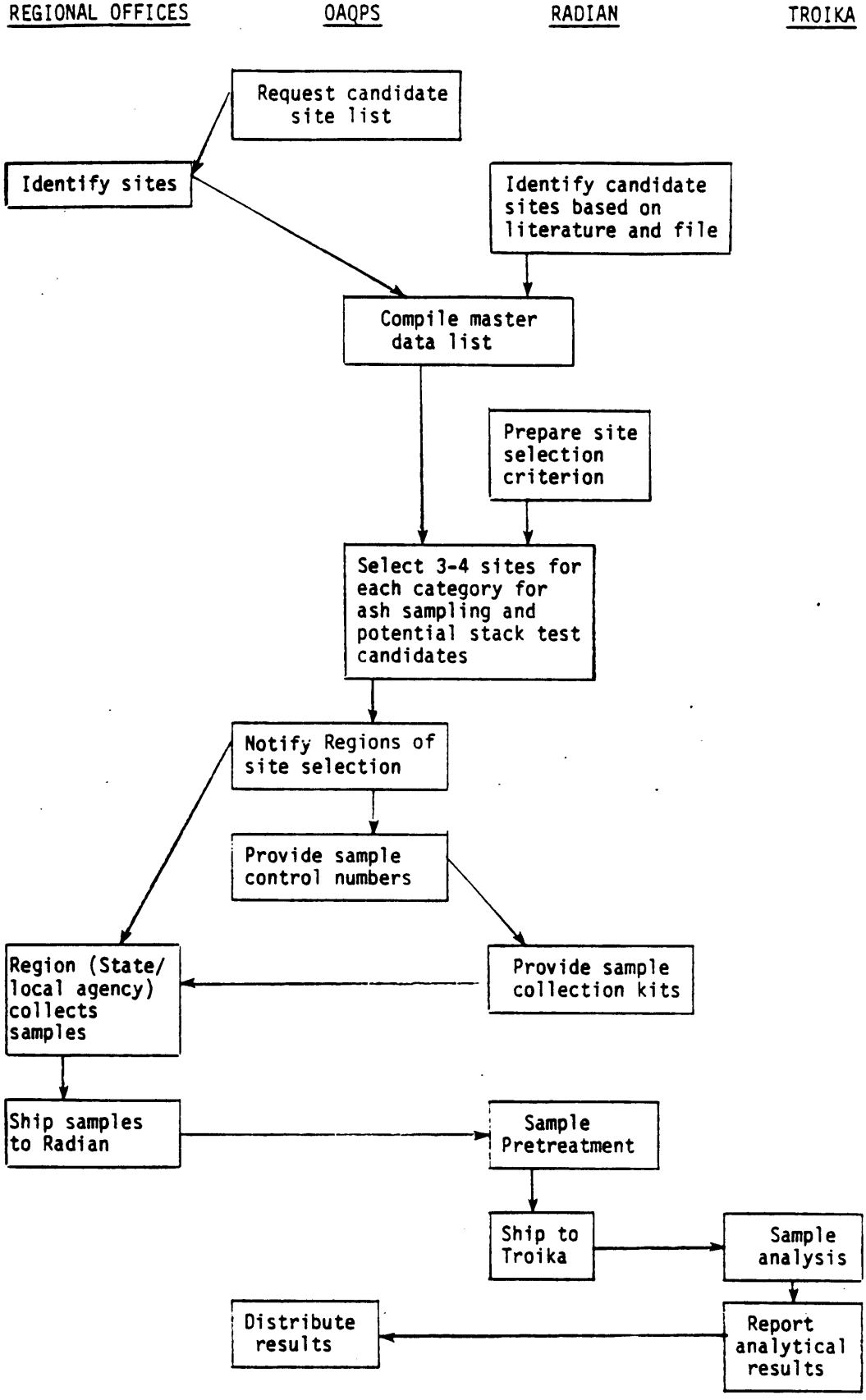

Figure 2-1. Site selection process for the Ash Sampling Program.

TABLE 2-1. TIER 4 - ASH SAMPLING PROGRAM (ASP) ACTIVITIES

Organization	Action
Regions	Identify sites and prepare region-specific source lists
Radian	Preparation of Ash Sampling Program Plan
OAQPS	Review and send ASP Plan and Procedures Document to Regions and the Sample Control Center (SCC)
OAQPS, Radian	Select sites for sampling
Regions	Site acquisition
Radian	Prepare/acquire QA blank and spiked samples
OAQPS	Contact SCC to provide number of samples and sampling schedule
OAQPS, SCC	Assign episode numbers
Radian	Preparation of sampling kits (to be assembled based on site information)
Regions	Collect samples, fill out sampling forms including site specific data needs
Regions	Packing and shipping of samples and completed sampling forms in prelabeled, prepaid containers
Radian	Receive containers and send copy of sampling forms to OAQPS
Radian	Prepare samples for Troika analysis (i.e. seiving, mixing, etc.), pack prepared samples and QC samples in shipping containers and ship to Troika/BSL
*Troika/BSL	Receive samples, prepare extract, and ship to analysis lab (RTP or Duluth)
Troika/RTP and Duluth	Receive extract, perform analysis, transmit results to BSL/SCC

Continued

TABLE 2-1. TIER 4 - ASH SAMPLING PROGRAM (ASP) ACTIVITIES (CONTINUED)

Organization	Action
SCC	Distribute results to OAQPS and regions in quarterly reports
OAQPS	Distribute results to regions
OAQPS, Radian and Regions	Analysis and review of ASP results
OAQPS and Radian	Write ASP report
OAQPS, Radian and Regions	Review of ASP report
OAQPS and Radian	Incorporation of ASP report results into final Tier 4 report

*Troika is the collective term for three EPA laboratories (Bay St. Louis, MS; Duluth, MN; and Research Triangle Park, NC, or their control laboratories) that are providing analytical support.

analysis identified and assigned ranks to broad source categories as classes, but it did not rank specific facilities within a source category. Table 2-2 summarizes the results of the initial work and subsequent data gathering. The site selection process for the Ash Sampling Program will be built upon much of the previous work, but will place its focus on specific facilities. It is anticipated that facility specific information will be provided by each region for each site identified. A brief questionnaire detailing the type of information needed for each site to aid in the screening process was developed and sent to the regions by OAQPS in August 1984. A copy of this questionnaire is included as Figure 2-2.

The purpose of screening the initial lists submitted by the regions is to select up to three ash sampling sites from each source category represented in addition to any full scale source testing sites. In some instances, only one or two facilities in a source category may be identified by the regional offices. In that case, OAQPS and Radian will identify the other one or two sites. The sites selected should be representative of the source category as a whole, and therefore should be typical of the source category in terms of easily definable population characteristics, such as, size, type of combustion device, age, etc. for the source category under consideration. There may also be a subcategory that has a high potential for dioxin emissions relative to the remainder of the category. Table 2-3 provides a list of some of the candidate categories for the Ash Sampling Program, and also indicates the source characteristics that would be desirable from the standpoint of testing for dioxins/furans. Each of these characteristics would tend to increase the chance for dioxin/furan emissions from the source category in question.

In identifying sites for ash sampling, the following factors (where information is available) will be considered:

- Does the combustion device burn a fuel that generates ash (i.e., not gaseous or liquid alone)?
- Does the source have a particulate control device?
- Does the combustion device have any polychlorinated dibenzo-p-dioxin (PCDD) or polychlorinated dibenzofurans (PCDF) in the feed or fuel?

TABLE 2-2. COMBUSTION SOURCE CATEGORIES CONSIDERED FOR TIER 4 SAMPLING PROGRAMS (NOVEMBER 1984)[1]

Rank A Source Categories
- Sewage Sludge Incinerators
- Black Liquor Boilers

Rank B Source Categories
- Industrial Incinerators (including hospital incinertors)
- PCP[2] Sludge Incinerators
- Carbon Regeneration (industrial)
- Wire Reclamation
- Wood Boilers (firing PCP treated or salt-laden wood)

Rank C Source Categories
- Charcoal Manufacturing
- Wood Stoves
- Mobile Sources
- Small Spreader-stoker Coal Boiler
- Chlorinated Organic Waste Incinerators
- Lime-Cement Kilns Cofired with Chlorinated Organic Wastes
- Commercial Boilers Firing Fuels Contaminated with Chlorinated Organic Wastes
- Forest Fires
- Apartment House Flue-fed Incinerators
- Agricultural Burning
- Landfill Flares
- Residential Oil Burners Burning Waste Oil

Rank D Source Categories
- Municipal Solid Waste (MSW) Incinerators
- Industrial Boilers Cofiring Wastes

[1]This list of source categories undergoes constant review and revision and [2]is subject to change.

[2] PCP = polychlorinated phenols

Rank A - Large source categories (greater than 1 million tons of fuel and/or waste burned annually) with elevated dioxin precursor contamination or feed/fuel. These categories have a high potential to emit TCDD, and population exposure is expected to be relatively high compared to other source categories.

Rank B - Small source categories (less than 1 million tons of fuel and/or waste burned annually) or source categories with limited dioxin precursor contamination of feed/fuel. These categories have a high potential to emit TCDD, but population exposures are expected to be low.

Rank C - Source categories less likely to emit 2,3,7,8-TCDD.

Rank D - Source categories which have been tested three or more times.

FIGURE 2-2- SOURCE DESCRIPTIONS FOR POTENTIAL SCREENING SITES FOR TIER 4 - NATIONAL DIOXIN STUDY

SOURCE IDENTIFICATION

Source Category: _____ NEDS/SCC Number(s): _____
Site Name: _____ Contact Name: _____
Address: _____ Title: _____
_____ Phone: ( ) _____

COMBUSTION PARAMETERS

The design of the source affects the operating conditions and quantity of dioxin emissions. Please descibe briefly, the type, design and size of the source, specifying units of measure where necessary (e.g. MMBtu heat input per hour, tons of fuel or feed per year). _____

FUEL AND FEED CHARACTERISTICS

The presence of dioxins, dioxin precursors (e.g. chlorinated phenols and benzenes), and chlorine in the fuel or feed are believed to be major factors in the emission of dioxins from combustion sources. Please identify the types of fuels and feeds burned (e.g. oil, coal, wood waste, etc.) and the constituents of interest (e.g. wood treated with chlorinated phenols, polyvinyl chloride insulated wire, etc.). _____

COMBUSTION DEVICE OPERATION

If dioxin or precursors are present in the fuel or feed to a combustion device, operating conditions determine if dioxins are formed and/or thermally destroyed. Please descibe briefly, the general operating conditions of the source including supporting engineering data , if available (e.g. combustion temperatures less than 800 °C, combustion zone residence time less than 1-2 seconds, high moisture content fuel, unprocessed or bulky fuel, etc.). _____

CONTROL DEVICE DESIGN AND OPERATION

If dioxins are present and are not destroyed by the combustor, a control device which operates below dioxin condensation temperatures and with a high collection efficiency for fine particulate may reduce emissions. Please describe briefly, the general design and operation of control devices, if known (e.g. fabric filter, ESP, cyclones, scrubbers, etc.). If the source is uncontrolled, write in "uncontrolled".

Figure 2-2 - SOURCE DESCRIPTIONS FOR POTENTIAL SCREENING SITES FOR TIER 4 - NATIONAL DIOXIN STUDY (CONTINUED)

ASH HANDLING SYSTEM DESIGN AND OPERATION

If dioxin is produced by a combustion device, the ash handling system design and operation is important in identifying potential contamination areas and in selecting suitable ash sampling equipment. For both combustion and control devices, briefly identify the ash handling and disposal systems (e.g., wet sluiced bottom ash, pnuematically conveyed ESP ash, hoppers, settling tanks and ponds, storage piles, etc).

_____

_____

_____

COMPLIANCE TEST REPORT

A copy of the most recent source test compliance report would be beneficial if available. The report would be very useful since it will provide engineering information on combustion operations and emissions.

ADDITIONAL PERTINENT INFORMATION (OPTIONAL)

Additional information will be required to make final determinations of "worst case" and "representative" sites and suitability for stack testing. This information may be requested later only for selected sampling sites. OAQPS may access some of this data from CDS and NEDS, if available. If however, it is more convient to provide this information during this request (i.e., data is incomplete or unavailable in CDS and NEDS), you might include it.

The following data are additional indicators of source performance:

Flue gas constituents - O_2_____% CO _____%;

Emissions data (from source test) - Particulate_____ NO_x _____ SO_2 _____ VOC_____.

For locating sampling sites and clarifying source descriptions, maps, plans and schematics may be attached.

Send To: Bill Lamason, Environmental Engineer
Field Investigation Section, AMTB (MD-14)
U. S. Environmental Protection Agency
Research Triangle Park, North Carolina 27711

TABLE 2-3. SOURCE CHARACTERISTICS OF INTEREST FOR DIOXIN TEST PROGRAM[a]

Source Category	Source Characteristics of Greater Interest
Apartment house incinerators	Units with a record of poor combustion conditions and excessive waste loading.
Black liquor boilers	Paper pulp mills using wood stored in salt water prior to pulping and/or producing bleached paper where bleach effluents are combined with the black liquor.
Carbon regeneration furnace	Activated carbon used to treat industrial waste streams of chlorinated organics.
Cement kilns	Firing chlorinated organic wastes (e.g., Cl-phenols, Cl-benzenes).
Charcoal manufacturing	Using wood scrap treated with chlorinated organics.
Chemical sludge incinerators	Burning wastes containing chlorinated organics.
Commercial boilers	Burning chlorinated organic waste contaminated fuels.
Hazardous waste incinerators	Firing chlorinated organic wastes (e.g., Cl-phenols, Cl-benzenes).
Industrial boilers (spreader stoker)	Smaller than 50 million Btu/hr with a particulate control device.
Lime kilns	Firing chlorinated organic wastes (e.g., Cl-phenols, Cl-benzenes).
Open burning	Open burning of fields or wastes which have been treated with chlorinated organics.

TABLE 2-3. SOURCE CHARACTERISTICS OF INTEREST FOR DIOXIN TEST PROGRAM[a] (Continued)

Source Category	Source Characteristics of Greater Interest
Sewage sludge incinerators	All waste treatment plants servicing areas with industry manufacturing or using chlorinated organics.
Waste incinerators, hospitals	Burning chlorinated organics.
Wire reclamation incinerators	Burning PVC-coated wire or wire contaminated with PCB's.
Wood/bark boilers	Burning pentachlorophenol treated wood or salt-laden wood.

[a]Reference: Ash Sampling Test Plan.

- Are there any PCDD/PCDF precursors in the feed or fuel (e.g., chlorophenol, chlorobenzenes)?
- What is the chlorine content of the feed and fuel?
- What kind of combustion conditions are present in the combustion device?
- Can an ash sample be obtained?

As discussed in the Tier 4 Project Plan , the majority of the source categories under consideration are combusting waste products that have the potential to be contaminated with dioxin/furan precursors such as chlorinated phenols, chlorobenzenes, or other chlorinated organics. Chlorinated phenols are widely used as herbicides, fungicides, or microbiocides. Any combustion sources burning waste products which may have been contaminated with these materials or any other precursors are potential sites. In addition, since the formation mechanism of PCDD/PCDF is uncertain and the precursor hypothesis has not been fully supported, any source category combusting high chlorine content material (such as PVC or chlorinated solvents) under poor operating conditions (i.e., low oxygen content and temperature) may also be a potential site. During the evaluation of potential test sites in each of the source categories, EPA will also consider numerous other parameters that could affect the PCDD/PCDF emissions and the ability to obtain an ash sample. These would include factors such as combustion device design and operation, presence of a control device, and the ash generation, collection handling, and disposal practices. In the selection of "worst case" sites or "typical" sites, combustion conditions will be a primary selection criteria for site selection.

The primary inputs to the site selection process will be the source description data supplied by the regional offices in conjunction with their candidate list of sites. In addition to this data, general information on each source category as a whole is being compiled by Radian. This type of information will allow a determination of representativeness of a recommended site compared to the overall source categories.

Another criteria that will be used in selecting potential ash sampling sites will be the availability of data for a candidate site. As discussed

earlier, several regions have submitted lists of candidate sites. However, completed information sheets are not available for all candidates. In many instances, only the site name and type of combustion device are provided. Information pertaining to control devices and ash handling systems have not been provided. As the site selection effort progresses, further contacts with the regions may be necessary to obtain additional data on candidate sites.

3.0 OVERVIEW OF ASH SAMPLING PROCEDURES

The purpose of this section is to outline the steps to be followed by the personnel conducting the ash sampling at any given combustion source. As described earlier, OAQPS and Radian will select candidate sampling sites from lists provided by regional offices. Each regional office will be notified concerning the sites selected from their region. Sampling kits for each site will be provided to the designated contacts in the region by Radian Corporation. After receipt of the sampling kits, the following steps should be taken.

1. Unpack the sampling kit to verify the contents and to check to see if the sample jars are clean. If any bottles appear dusty or dirty, the outside may be wiped with tissue paper wipes provided in the sampling kit. If the inside of the bottles appear dusty or dirty, do not use the containers. Notify Radian to receive a replacement kit.

2. Review Section 4.0 of the Ash Sampling Plan (this document) entitled "Sampling Locations and Methods."

3. Review any site specific data available for the source. Pay particular attention to details of the control devices, if any, and the ash handling equipment. Make a preliminary selection of the sampling location if possible (see Figures 4-1 through 4-4 in the document).

4. Schedule a visit to the facility, discuss the need for site specific data with the facility prior to the visit (see Section 5.0 of the Ash Sampling Program Plan) and the potential ash sampling locations selection in step 3 above.

5. Visit the facility, select the final sampling location in conjunction with plant personnel, obtain the samples.

6. Wipe off outside of the jars if used for sampling.

7. Attach identifying labels to each sample container. All sample containers must be sealed in the field with a tamper proof seal. Initiate a

chain-of-custody record for the sample set. Specific instructions for labeling the samples and for completing the chain-of-custody forms are given in Section 6.2 of the Ash Sampling Program Plan (this document). Pack the samples for shipment following the instructions given in Section 6.4 of the document.

8. Fill out all necessary data forms for the site and pack a copy of all forms with the samples. The information needed is given in Figure 2-2 and Section 5.0 of the Ash Sampling Program Plan. Prepare and label a schematic of the combustion device and sampling locations as described in Section 5.0.

9. Ship the samples to Radian Corporation using the sample shipping boxes and labels provided (see Section 6.4). Call Radian to inform them of the date and method of shipment.

4.0 SAMPLING LOCATIONS AND METHODS

This section describes the procedures to be used to identify an optimal sampling location for the acquisition of an ash sample, and methods that should be used to acquire the ash sample. General guidelines for the selection of a sampling location are given. However, the ultimate selection of the sampling location is at the discretion of the sampler.* The methods discussed will vary depending upon the nature of the ash at the sampling point and the type of conveyance or storage being used. Not all methods will be applicable to any one given combustion source. The sampling methods described focus on sampling from moving solid or slurry streams i.e., conveyors, pipes, sluices, etc. For the Ash Sampling Program, it is recommended that samples not be taken from storage piles, ponds, or containers due to the difficulty of getting a representative sample. It may be necessary, however, to take a sample from a live storage hopper, such as, at the bottom of a baghouse or electrostatic precipitator. The best source of information regarding the feasibility of any sampling location, and the physical characteristics of the collected ash at the location is the facility staff. The sampler should endeavor to involve facility personnel in the sampling location selection process as early as possible.

4.1 SELECTION OF A SAMPLING LOCATION

To determine the appropriate sampling location the following general criteria should be used:

*Throughout this section, the term "sampler" is used to denote the individual responsible for conducting the actual sampling. This may be someone from a regional office, State or local agency, a facility operator, or contractor personnel.

(1) The sampling should be from the ash stream that is farthest downstream from the combustion process or where the smallest size ash is collected.

(2) The sampling point or points should provide representative samples that can be collected by the standard sampling acquisition and analysis hardware. For the Ash Sampling Program, locations where the sample jar can be used directly to obtain samples are preferred.

(3) The sample should be collected from a moving stream of solid or slurry (i.e., conveyor, pipe, sluice, etc.) when possible.

(4) When possible, each sampling point should provide a representative sample of the stream. In some instances, ash or flue gas streams from several combustion sources at a facility will be combined. Only one of the combustion sources may be the focus of the Ash Sampling Program. In this case, sample points downstream of where the ash streams combine will not be representative of the one source.

In order to select the optimal sampling location that meets the above broad characteristics, the sampler should perform the following steps:

(a) Trace the flow of combustion gases from the combustion device through the heat recovery devices and control devices. This involves the physical inspection of the duct work from the combustion device to the stack.

(b) Locate and itemize control devices, stacks, and sampling locations for ash. These include: ash hoppers at the bottom of boilers, discharges from mechanical cleaning devices such as cyclones, and ash hoppers on control devices such as ESP's or fabric filters. These hoppers should be "live" storage hoppers.

(c) Determine if the physical parameters of the gas streams at each sampling location are available. This is important since a temperature history of the ash is needed in order to fully interpret the data.

Since a slurry stream requires more in-depth analysis of sampling locations, the sampler should consider the following factors:

(a) The stream homogeneity. This is the most important problem that must be addressed by the sampler. Unlike gas streams, which mix fairly evenly, liquid streams tend to be more stratified because of lower agitation and higher fluid viscosities.

(b) Stream flow rates. Large slow moving streams will offer more of a chance for stratification. This factor is especially important in large pipes or open ditches.

For all sampling the sampler should attempt to identify points where the ash in a moving stream can be sampled. This is much preferred over sampling from a storage bin or hopper. Sample consistency is also important. It is preferable to sample finely divided material rather than large coarse material since is easier to get a more representative sample of a fine material. Finally, if several sampling locations are available, the sampler should select the location farthest downstream from the combustion device, or where the finest particulate is being collected. Several studies have shown that dioxins/furans are preferentially enriched on the smallest particulate (ash). If dioxins/furans are present, they will most likely be found in the finest and coolest ash leaving the combustion device or control device. For these reasons fly ash will be preferred over bottom ash, and ash from the second control device in series is preferred over ash from the first.

A general schematic of a generic combustion device with two control devices in given in Figure 4-1. When faced with this situation, the sampler should try to sample at the second control device. The preferred location would be Point 3, the collected particulate from the control device, where the stream is being conveyed to the storage or disposal location, not Points 5 or 6, the storage or disposal site. Point 3 would represent the smallest collected particulate and the coolest ash sampling location in the system. Following identification of the candidate sampling locations, the sampler should review the location criteria listed above, prioritize the locations with respect to meeting these criteria, and select the optimal location.

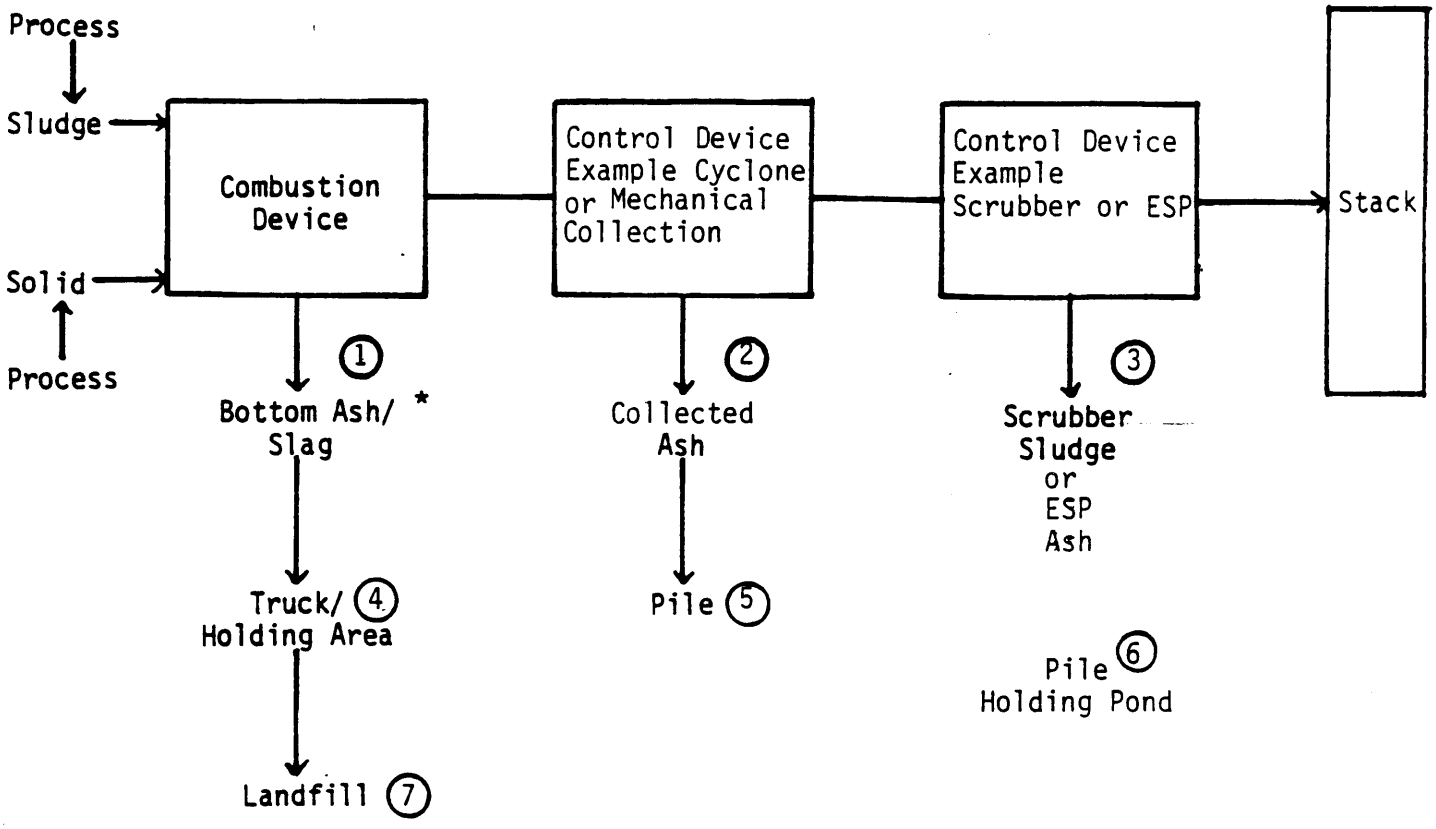

*This sampling location could be extremely hot. Care should be taken if bottom ash is to be taken directly upon leaving the combustion device.

○ Denotes potential sampling locations.

Figure 4-1. Generic plant with example ash sampling sites.

Prior to actual sampling, the sampler should ascertain the operating status of the combustion device, and determine at what rate the waste and/or fuel of interest is being fired. After sampling, the sampler should ensure that he has acquired all of the site specific data needs discussed in Section 5 of this report, including the applicable flue gas temperatures and combustion and control device operating conditions.

4.2 SAMPLE SIZE

Two 950 ml capacity sample jars will be provided. One or more grab samples of ash (sludge, liquid, etc.) should be placed in each container. The sample or samples should be of sufficient size to fill a container half to three-quarters full (approximately 500 grams per jar).

Two samples should be taken for each site, and the total sample size shipped to Radian should be 1/2 to 1 kg. This sample size will be sufficient to fulfill all analytical requirements.

It is anticipated that the time required to obtain two samples will be less than 1 hour. For the purposes of the Ash Sampling Program, integrated sampling over 4 hours (the sample period for stack testing) is not necessary.

4.3 SAMPLING METHODS

The following subsections describe the preferred methods for acquiring samples for the Ash Sampling Program. Only grab samples of ash are needed to fulfill the objectives of the program. The methods described below are modified grab sampling methods based for the most part on methods proposed by ASTM, EPA, or other organizations. In all instances, the methods have been simplified. Methods for sampling ash from moving streams and live hoppers are described. Only simple sampling equipment is needed to obtain ash samples for the program. Where possible, the sample containers should

be used as the sampling equipment. For example, if cool ash from a conveyor is to be sampled, the sample jars can be used to scoop ash from the stopped conveyor or can be held in the falling ash stream at the discharge end of the conveyor. The intent of the sampling methods described is to obtain an ash sample that has not been contaminated with other materials and that is as representative as possible.

Combustion device ash encountered during this program may be solids, sludges, slurries, or liquids, depending upon the design of the ash handling system and/or the type of particulate collection device. The recommended methods for acquiring the various types of ash samples are summarized in Table 4-1 and are discussed below.

The most typical sludge/solid streams will be bottom ash and particulate control device solids. Sludges are defined as material which contains at least 20 percent moisture but do not flow. They do not move freely as a slurry would and do not mix well when stored or contained. Solids are defined as materials which contain less than 20 percent moisture. Solids may or may not mix or flow well. The sampling methods utilized during this program will depend upon the state of the material and the sampling location.

Figures 4-2 through 4-4 show recommended sampling locations for some particulate control devices that may be encountered. If possible, ash samples should be taken from moving streams and not from storage or disposal hoppers. In all instances, sampling locations and procedures should be discussed with plant personnel. The facility operators may prefer to conduct the ash sampling at any location because of safety problems associated with access to moving equipment or sampling of hot streams.

4.3.1 Sampling of Ash on Conveyor Belts or in Screw Conveyors

4.3.1.1 ASTM "Stopped-Belt Cut" Method (D2234-76). This method covers sampling of solid materials transported on conveyor belts that can be stopped for an appreciable amount of time without disrupting plant operations (i.e., several minutes). This sampling method can be applied to dry bottom ash, char or slag, and sludge.

TABLE 4-1. RECOMMENDED SAMPLING METHODS FOR ASH SAMPLING

Sample Location	Sample Method	Section
Ash pit	Scoop or shovel through access door	4.3.2
Live hopper	Scoop or shovel through access door	
Conveyor belt	Stopped belt	4.3.1
Sluice	Dipper/scoop	4.3.3.1
End of pipe	Dipper/scoop	4.3.3.2
Pipes	Tap	4.3.3.3

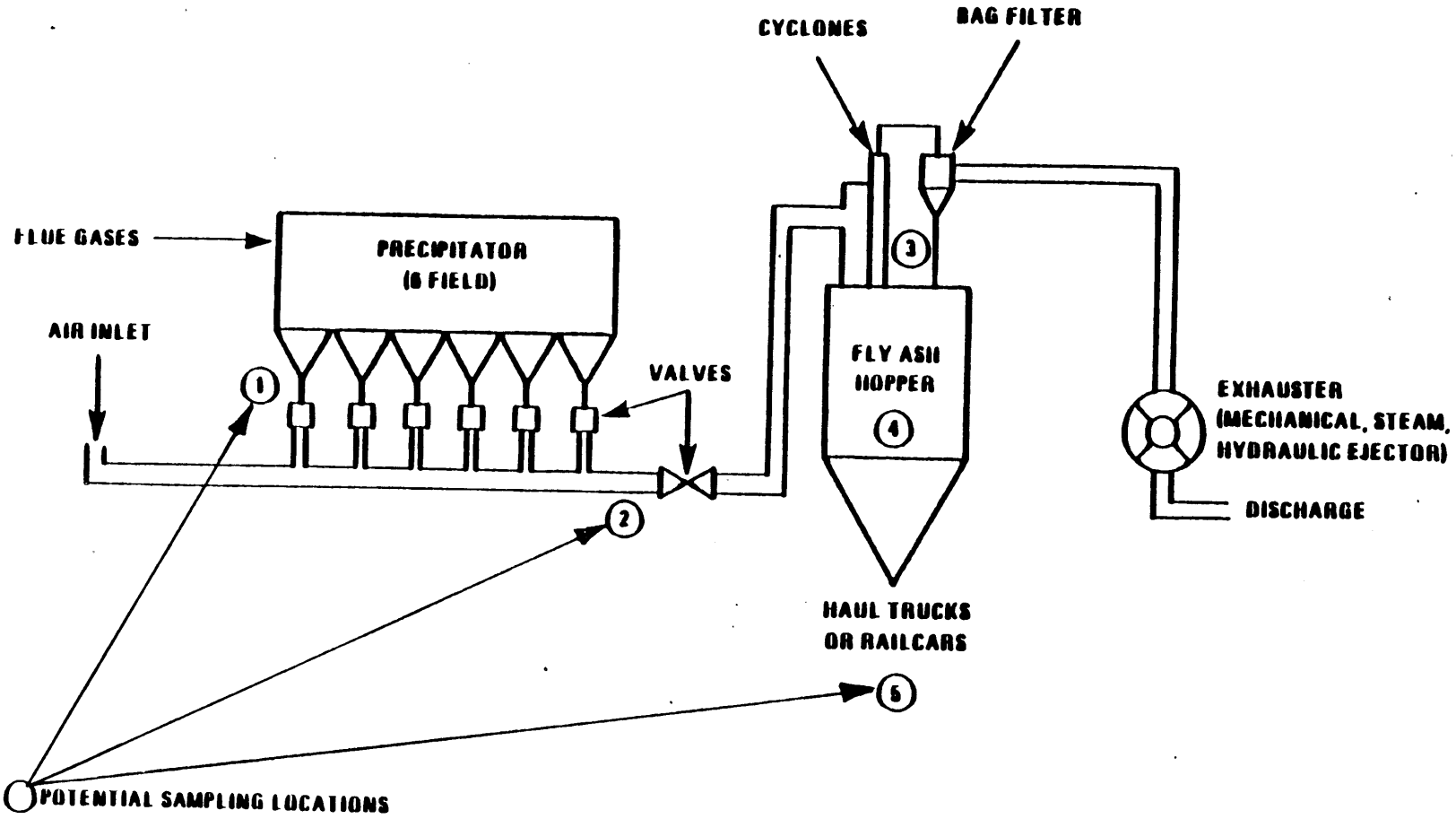

Figure 4-2. Vacuum ash handling system.

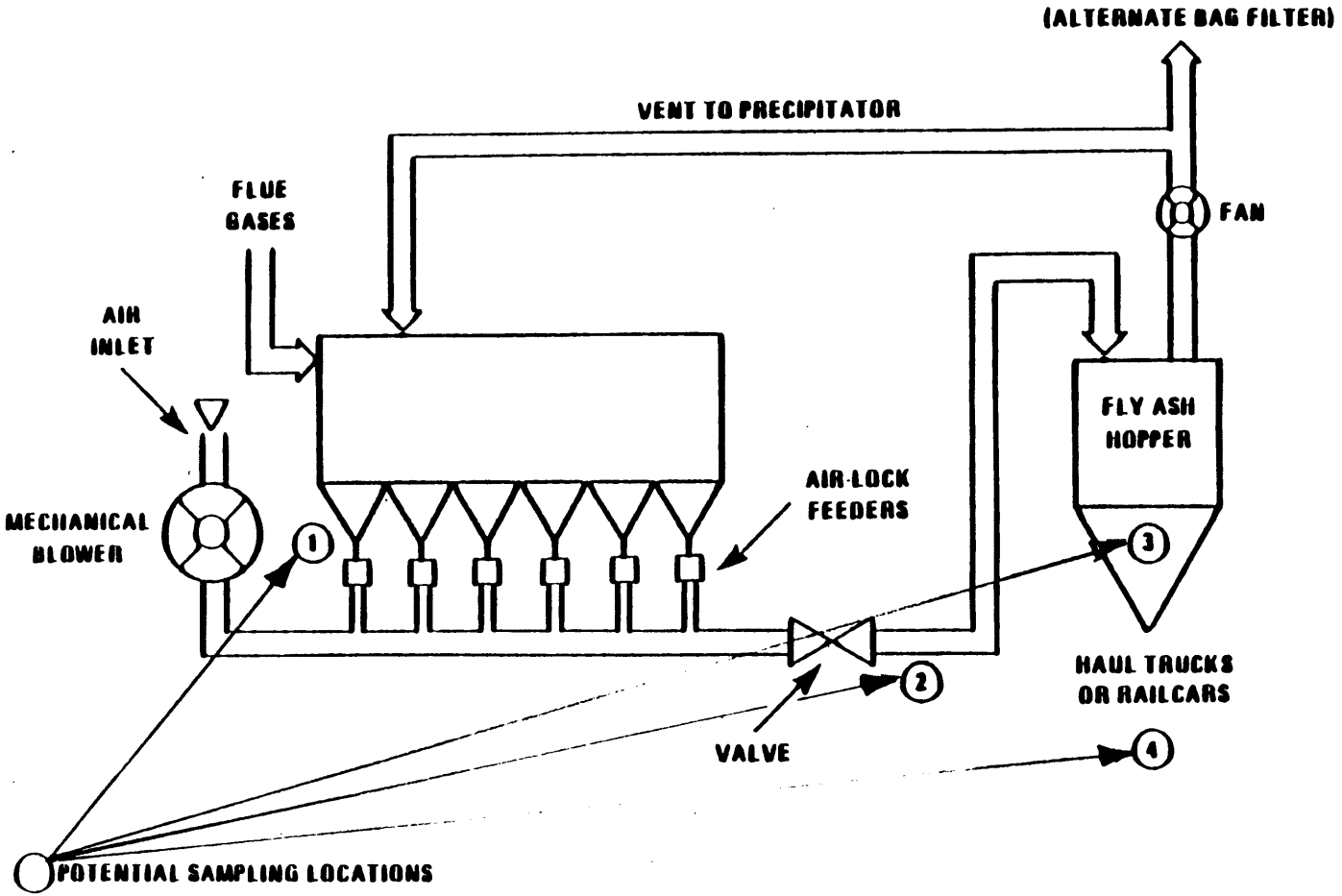

Figure 4-3. Air pressure ash handling system.

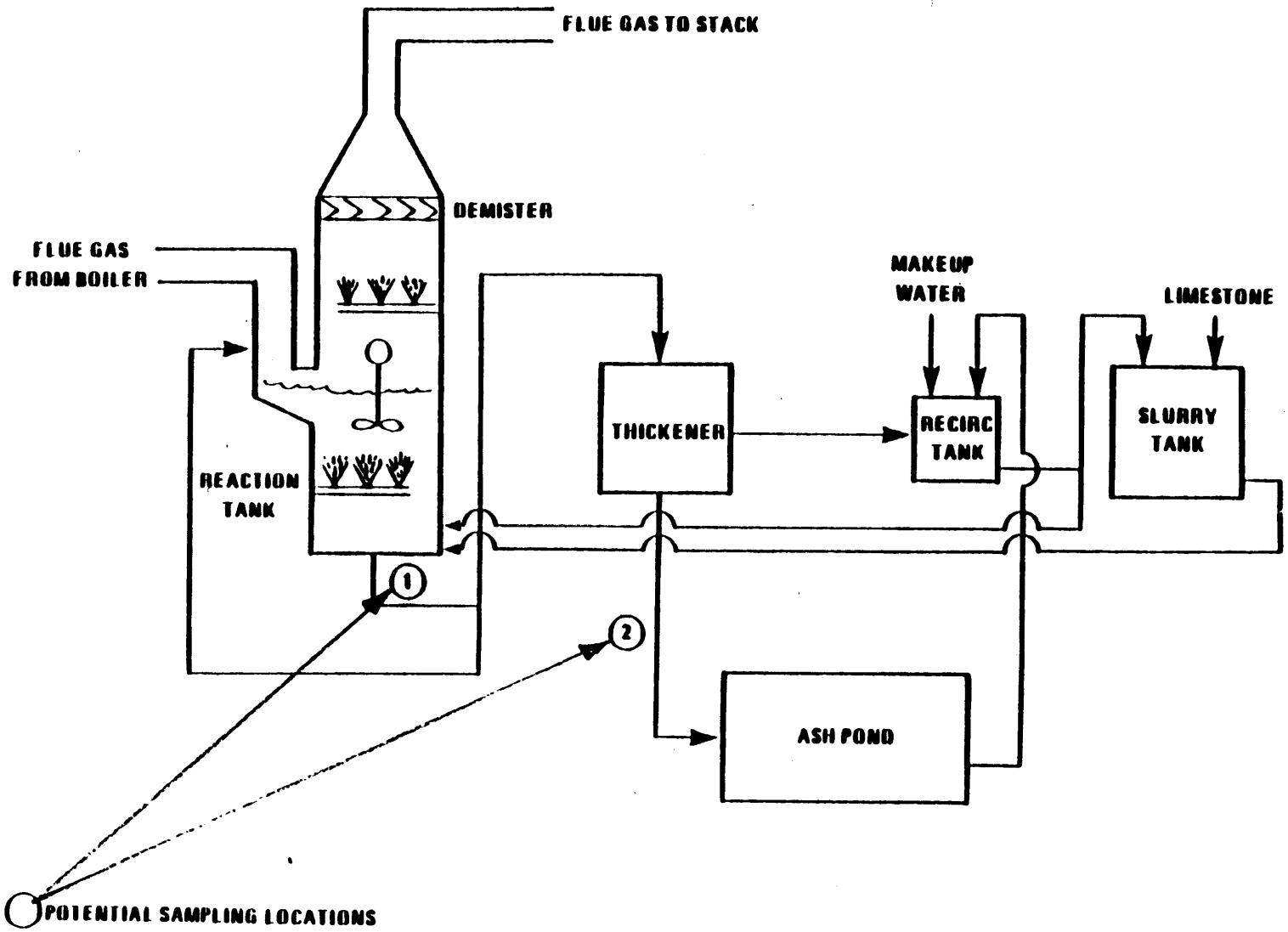

Figure 4-4. Limestone wet scrubber.

This is the most favorable method for obtaining a representative sample of material on a conveyor belt. With the belt stopped, a full-stream cut is obtained from the belt with a shovel and brush (for fine material). The width of the cut must be at least three times the diameter of the largest particle or 1.25 inches, whichever is greater. Also, the sides of the cut must be as nearly parallel as possible. The sample material can be placed into a storage container for transport to the lab or may be put directly into sample bottles if no other processing is required.

For measuring the width of the cut required, the diameter of the top size particles must be known (to set the minimum width allowable, as described above). A measuring tape can be used to mark off the correct width. Sample material can be removed with a shovel or with a dustpan and brush for fine-grained material. Samples can be transferred to large buckets or boxes with a large funnel or scoop. The sampling equipment must be clean and dry before use.

The stop-belt method, as the name implies, can only be used at facilities where the conveyor system can be interrupted long enough to remove samples without disrupting plant operations. The sampling point(s) selected should allow complete access to either sides of the belt and should be close to a floor or platform a facilitate moving and storing sample containers and equipment. There should be sufficient work space so that sampling personnel can shovel or scoop solids or sludge directly from the belt into containers. There should also be adequate space for personnel to stand clear of the belt if it is accidentally started.

4.3.1.2 ASTM "Part Stream Cut" Method (D2234-76). This method covers sampling of solids that are transported on moving conveyor belts and vertically falling material where access to the entire belt width is limited for some reason or cases when no full-stream sampling is available. Thus, samples obtained by this method are somewhat less representative than those from a full cross-section. This method may be used where a cross-stream sampler has not been installed or where space limitations prevent taking a complete cross-section. Typically, a shovel or trough is moved quickly through the stream of material falling from the end of the belt, without

allowing material to bounce back out of the trough or fill the trough and overflow. The shovel may be plunged into the sample stream several times in different locations to obtain a representative increment.

Equipment needs include a shovel to remove sample material, compositing containers, and sample containers. For cool ash streams, the sample containers themselves can be held under the stream of falling material at the end of the belt. After filling the jars, wipe the outsides, label, and pack for shipment.

Typical sample collection procedures involve inserting a large shovel or trough into the stream of material falling off the end of the belt. Collected material is then transferred to the sample containers, and the process is repeated until a sufficient amount or number of samples have been taken.

4.3.2 Sampling of Ash From Live Storage Hoppers on Control Devices or Bottom Ash Hoppers on Combustion Devices.

In many instances, samples of dry ash or collected particulate can be obtained directly from live storage hoppers prior to being sent to disposal. Access doors or ports are generally available in these hoppers. The availability of sampling locations for live hoppers and the intent of the sampling should be discussed with plant personnel prior to the visit. Sampling from these locations is best performed by plant personnel since the material may be hot and access to operating equipment is necessary.

Samples can be collected by gravity flow or by shovel into clean buckets and allowed to cool prior to placing into shipping jars.

4.3.3 Sample of Ash Slurries From Sluices or from Pipes

4.3.3.1 Dipper/Scoop. Grab samples of ash sludge or slurry material may be collected if access to a sluiceway is available. The grab sample should be collected with a modified dipper or with a sample container. This method may also be applicable if access to an underground pipe through manholes or other access points is available.

The dipper used for grab sampling is constructed of a wide mouthed metal container (1 liter volume) attached to an end of a telescoping

aluminum or fiberglass pole. The dipper collects sludge samples directly from the sludge waste stream, and the sample is then transferred to an appropriately sized temporary storage container.

To take a grab sample with a dipper, the dipper is cleaned, mounted on a telescoping pole, and inserted into the stream at the desired depth with the mouth of the container down. The dipper should be turned over to an upright position, allowing the container to fill completely. The dipper can then be removed from the sludge, and the sample transferred to a temporary storage container. This process should be repeated until sludge has been collected. If a dipper is not available, a sample can be taken by inserting a clean sample jar into the stream, allowing it to fill, and then removing from the stream. The outside of the jar should be wiped clean prior to packaging.

Precaution should be taken to avoid loss of the sampling device if the waste stream is moving at a high velocity.

4.3.3.2 End of Pipe Sampling. These methods provide a procedure for obtaining slurry waste samples from a pipe discharge, for example, at a settling pond or lagoon using a dipper sampler.[1] The method applies to all slurry-type wastes.

This method is less favorable than isokinetic sampling, since mixing conditions and sample homogeneity ahead of the pipe end cannot be predicted. The method involves using a dipper or large open-mouthed bottle or bucket to obtain a cross-sectional portion of the liquid or slurry flowing from the end of the pipe. Since flow streams containing solids tend to be stratified, several samples from different locations in the stream should be taken.

End-of-pipe sampling is most conveniently done with a dipper. This can be fabricated from a wide-mouth bottle affixed to a wooden handle or other extension. If the pipe end is very accessible, large buckets may also be used. Samples can be composited in buckets or other clean containers. For

[1]Application of a dipper sampler as described in (EPA, Office of Research and Development, "Emissions Assessment of Conventional Stationary Combustion Systems: Methods and Procedures Manual for Sampling and Analysis," 1979).

the purposes of the ash screening program, the sample jars can be used to collect the end of pipe sample directly if no dipper or bucket is available.

The dipper, sample jar, or bucket sample at the end of a pipe is obtained by inserting the sampler into several different portions of the outfall, so as to collect a representative cross-section of the material. The individual increments can be composited in a large bucket or lined drum prior to filling the shipping jars. When these samples are taken, safety precautions are very important, especially where the discharge has a high velocity or where access to the pipe is somewhat precarious. [Sampling personnel may secure the bucket with a length of line, and/or use a safety harness secured by another person (especially around ponds or lagoons).]

4.3.4 Sampling of Ash Containing Liquids (e.g., Scrubbers)

Tap sampling, Figure 4-5, is the appropriate method for sampling moving liquids in pipes or ducts. Slurries in motion are sometimes sampled by tap, but this is unreliable if the solids content is much greater than 10 percent.

To acquire a tap sample, the outlet of the valve or stopcock used for sample removal is fitted with a length of precleaned Teflon^{R} tubing sufficiently long to reach the bottom of the sampler container. After the Teflon^{R} conduit line has been placed in the sample container, the tap is opened to admit a moderate flow of liquid. The conduit line, but not the sample container, should be flushed before the sample is actually taken. Flushed material should be returned to the process.

If the sample temperature is above about 50°C, the sample should be cooled before being placed in a sample container. Cooling the sample can be affected by using a longer length of Teflon^{R} conduit line, coiling it, and placing it in an ice-water bath. Again, the tap is opened, and the liquid is discharged until possible sediments and gas have been flushed. Then the sample container is filled.

A moving liquid stream, known to contain particulate matter or immiscible phases, will be considered stratified. The optimum location for a sampling tap will be after a bend or constriction which will induce turbulence or at least promote mixing. Only the main pipe or stream flow should be sampled. Taps in vents or slipstreams are not recommended because solids can accumulate.

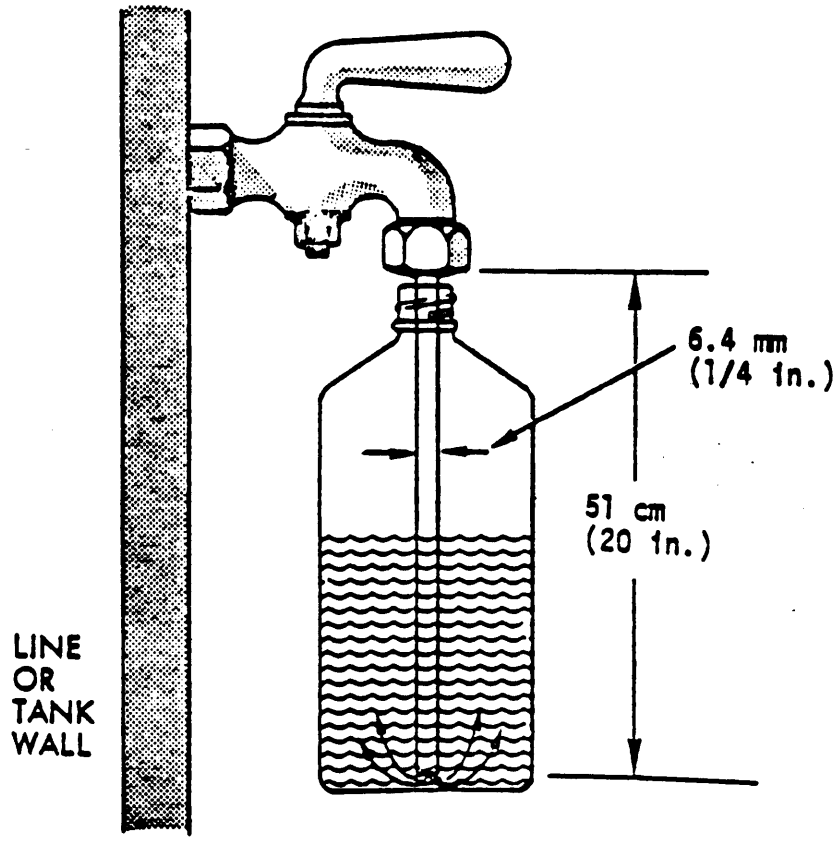

Figure 4-5. Schematic of tap sampling.

5.0 SITE SPECIFIC DATA NEEDS

This section describes the site specific data needed for each ash sampling site in order to utilize the data in the final Tier 4 dioxin study.

As part of the final analysis, a comparison will be made between the ash sampling results for various source categories and the combined ash and stack sampling results from similar categories. Sufficient information is needed for each ash sampling site to allow a comparison to be made or to identify factors which may affect emissions. This information consists of two types, source category or subcategory information, and sampling location information. Much of the source category information will already have been gathered and submitted to EPA by the time a source is selected for ash sampling. As previously discussed, the regions have been asked to submit some source specific data for each candidate site identified. This information is summarized in Figure 2-2.

In addition to this information, the specific sampling location and site operation information listed in Figure 5-1 is also needed. A schematic of the sampling location indicating key parameters should also be submitted along with the samples. An example schematic is given in Figure 5-2. If possible, photographs of the sample locations would be a useful supplement to the schematic drawing.

FIELD DATA SHEET:

SAMPLE IDENTIFICATION AND PROCESS OPERATION

ASH SAMPLING PROGRAM

TIER 4 - NATIONAL DIOXIN STUDY

1. Sample site identification _____

2. Sampling organization _____

3. Date of sampling _____

4. Combustion device identification _____

5. Number of samples taken, frequency of samples
   e.g., 3 samples, 1 every 2 hours _____

6. Combustion device feed rate and/or load _____

7. Combustion device fuel type(s) during sampling _____

8. Sampling locations

   Brief description of location and pertinent stream characteristics;
   e.g., from figure, sample port in scrubber blowdown line,
   ash slurry, X percent solids combined with limestone.

9. Physical characteristics of gas stream at inlet and outlet of
   collection device.
   Temperature, O_2, CO, particulate concentration.

10. Schematic of location and ash handling system (See Figure 5-2).

11. Notes or comments on unusual conditions occurring during the sampling
    period, if any.

Figure 5-1. Field data to be collected during sampling.

Sampling Site _____

Name & Address _____

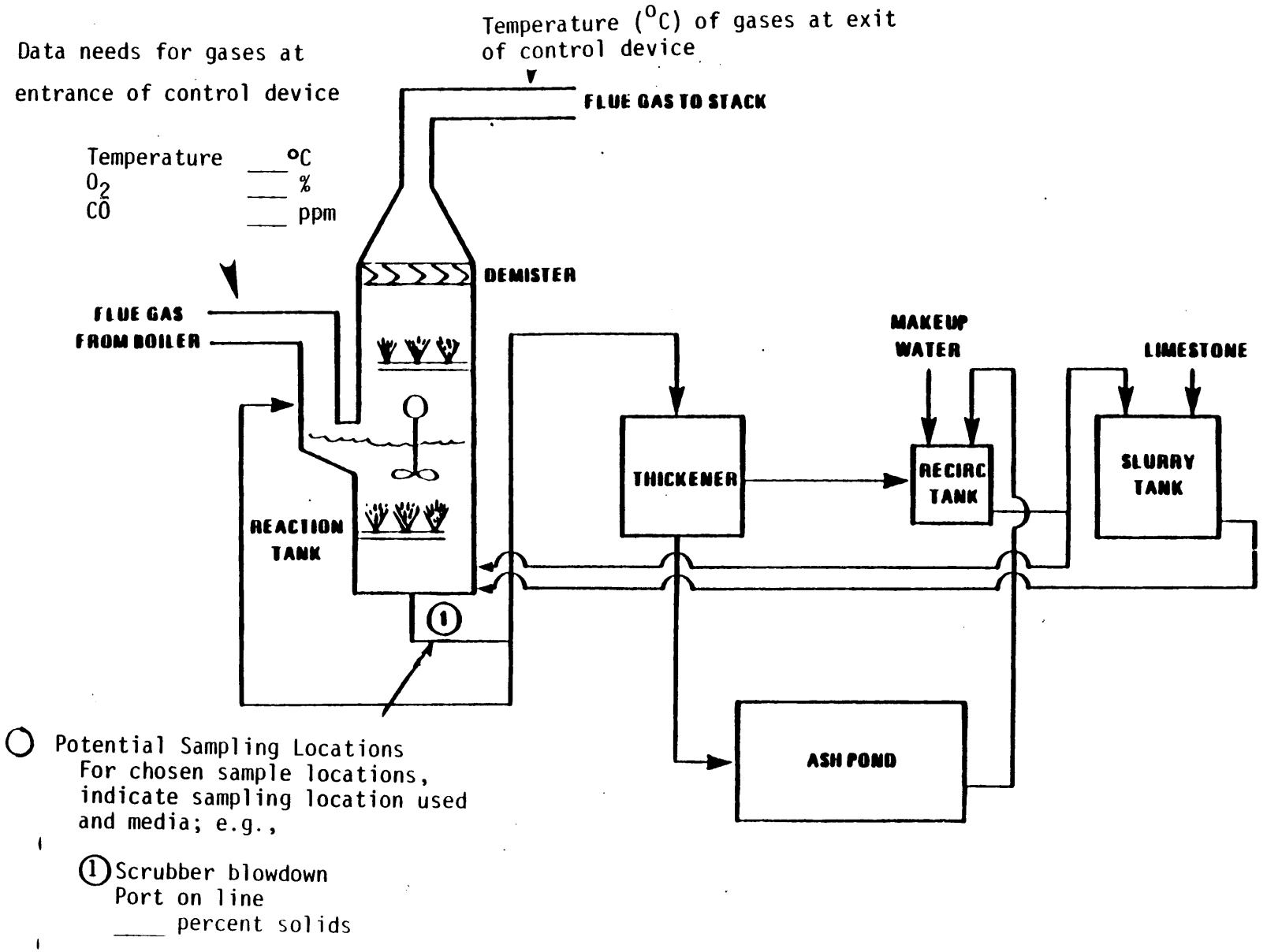

Figure 5-2. Example ash sampling data needs. Schematic of sampling locations.

6.0 SAMPLE CONTROL, PACKAGING, AND SHIPPING

The purpose of this chapter is to outline the procedures for sample scheduling, identification, documentation, and shipping. The States and EPA regional offices performing the ash sampling will interface with OAQPS which will coordinate acquisition of sample control numbers and requisition of sampling kits. Radian Corporation will provide all of the sampling kits to the State and EPA regional offices. Following site selection by Radian and OAQPS (see Section 2), the regional offices will be informed of the number and type of sites in their region to be sampled. At this time, the region should ensure that all of the necessary site specific information has been provided and that the type of sample and the sampling location has been specified. At the time of site selection, Radian will indicate the anticipated sample type and sample location based upon available information.

The regions should contact the site(s) and schedule a sampling visit. At least 2 weeks prior to the visit, Radian Corporation should be contacted to schedule shipping of sample kits (see Section 6.1). Following sampling, the samples should be labeled as prescribed in Section 6.2. Chain-of-custody procedures and shipping requirements are given in Section 6.3.

6.1 CONTROL OF ASH SAMPLING KITS

To ensure that the ash sampling study fulfills project objectives, a shipment tracking system will be utilized at Radian to facilitate proper identification and timely analysis of all collected samples. Once a source has been identified and is included in the sampling program, a sampling kit tracking record will be initiated at Radian/RTP through use of a microcomputer based software program. Example printouts of the information which will be recorded for every site are given in Figure 6-1.

SITE	SAMP. CODE	SCC#	EPISODE#	CONTACT	SHIP DATE	AIR BILL#	TRANS.

LOCATION: HONEY-RYE FIELD
SAMPLE CODE: AGB-1
SCC NO.: D0000101
EPISODE NO.: 2487
CONTACT NAME: T.HARRISON(DOA)
SHIP TO DATE: 9-25-84
AIR BILL NO.: XXXXXXX
TRANS. MODE: FEDERAL EXPRESS

RETURN DATE: 10-3-84
AIR BILL NO.: 289-783-266
TRANS. MODE: FEDERAL EXPRESS
REC'D. BY: R.JONGLEUX
COMPOSITED BY: R.JONGLEUX
SAMPLE COND.: SCREENED ASH

ANALYZING LAB I.D.: EPA-BSL
SHIP TO DATE: 10-19-84
AIR BILL NO.: 298-783-491
TRANS. MODE: FEDERAL EXPRESS

Figure 6-1. Example: Shipping record tracking.

In order to ensure continuity with the National Dioxin Study, sample control numbers will be coordinated through Mr. Ed Hanks of OAQPS/AMTB at (919) 541-5575 or FTS 629-5575. Mr. Hanks will issue the SCC numbers and episode numbers which he will obtain from the SCC. This information will be entered into Radian Tier 4 sample kit tracking system.

6.1.1. Scheduling of Ash Sampling Kits

Radian Corporation's Research Triangle Park office under EPA contract will provide sampling kits for the collection of ash samples for dioxin/furan analysis. Once sampling is scheduled, and at least 2 weeks in advance of the sampling date, the region should contact Radian Corporation (919)541-9100 to obtain sampling kits. Refer to the Tier 4 - Ash Sampling Program. At this time, the region should provide the following information:

- Name and address to which sampling kits should be sent,
- Number and type of samples to be collected;
- The type of sample to be collected (e.g., dry bottom ash, ESP catch, scrubber blowdown) and the proposed sampling location (e.g., access port on a line bottom hopper, convey or belt, tap, or blowdown line. Some of this information may have been provided as part of the initial data submitted by the regional offices. The sampler may have to call or visit the facility prior to sampling to ensure that this information is available;
- Name of requester;
- Group that will be performing sampling (e.g., regional sampling team, contractor organization), with name, telephone number, and address of sampling contact(s);
- Name and telephone number of primary regional or contractor contact(s) for problem resolution;
- Site name and location (city and State), an EPA site identification number (if applicable), and latitude and longitude of site;
- Scheduled date(s) of sample collection;

- Any other pertinent information that may impact sample scheduling and shipment (e.g., any changes from original site sampling plan, anticipated delays due to weather, equipment, or other conditions); and
- Date kits must be received by regions or samplers.

The sampling kits will contain precleaned glass bottles and sample collection devices if required, as well as other items needed to package and ship the samples.

6.2 LABELING AND HANDLING OF SAMPLES

In order to ensure data quality and sample record maintenance, established quality assurance procedures must be followed in the labeling and transport of samples. This section described the detailed procedures for transfer of samples to the Radian laboratory for compositing.

6.2.1 Labeling of Samples

Each sample collected for analysis will be placed in a 1 liter (l) sample container per the procedures described in Section 3. Each sample bottle shall have a sample label as shown in Figure 6-2, with the following information:

- Sample code,
- Container number,
- Date,
- Facility location,
- Field number (Episode),
- SCC number, and
- Remarks.

6.2.1.1 Specific Label Entries. The sample labels shall identify specifically the sample site and type of sample. Each site will be identified by a 4-digit episode number (listed in the upper right hand corner of the sample label under field number and chain-of-custody record enclosed in the sampling kit). The consistent use of these label entries will aid in the comparison of like samples and accounting of the types of

ATTENTION:
BEFORE OPENING
NOTE IF BOTTLE WAS
TAMPERED WITH.

RADIAN CORPORATION

Progress Center / 3200 E. Chapel Hill Rd. /
Nelson Highway / P.O. Box 13000
Research Triangle Park, NC 27709 / (919) 541-9100

SAMPLE CODE: _____

SCC NO. _____ CONTAINER NO. _____

ATTENTION:
BEFORE OPENING
NOTE IF BOTTLE WAS
TAMPERED WITH.

8-84-17403

Figure 6-2a. Chain-of-custody seal.

RADIAN
CORPORATION

Progress Center/3200 E. Chapel Hill Rd./
Nelson Highway/P.O. Box 13000
Research Triangle Park, NC 27709/(919)541-9100

FIELD NO: _____

SAMPLE CODE: _____

SCC NO. _____

CONTAINER NO. _____

LOCATION: _____

DATE: _____ CONTRACT: _____

REMARK: _____ FINAL WT: _____

TARE: _____

SAMPLE WT: _____

8-84-17403

Figure 6-2b. Sample label.

samples received by the laboratory. Site coding will be by type of source category and a numeric sequence. There are 18 source categories. There may be up to four sites in each category (see Figure 6-3 for list of source category codes). A record of site assigned numbers will be maintained through the source of a sample tracking system at Radian/RTP.

An example entry for the first industrial boiler site supplying a sample for the Ash Sampling Program would be as follows:

RADIAN
CORPORATION
Progress Center/3200 E. Chapel Hill Rd./
Nelson Highway/P.O. Box 13000
Research Triangle Park, NC 27709/(919)541-9100

FIELD NO: (ASSIGNED EPISODE #)

SAMPLE CODE: IB-1

SCC NO. (ASSIGNED)

CONTAINER NO. 1 OF 4

LOCATION: PLANT, CITY, STATE

DATE: 11/1/84 CONTRACT: 222-078-13

REMARK: _____ FINAL WT: _____

TARE: (ASSIGNED)

SAMPLE WT: _____

8-84-17483

When the label is completed, it should be firmly attached to the sample container and covered with clear tape. At least two tape strips should completely circle the sample container to prevent losing the label (Figure 6-2). Place a chain-of-custody seal across the taped lid so that the jar cannot be opened without tearing the seal.

6.3 SAMPLE CHAIN-OF-CUSTODY RECORD

Each group of sample bottles shipped to Radian/RTP will be accompanied by a sample chain-of-custody record (Figure 6-4). A separate chain-of-custody will be completed for each site sampled. This record includes the information on the sample label as well as a record of the chain-of-custody of the particular sample.

SEQUENTIAL CODE	SOURCE CATEGORY
AHI	Apartment House Incinerator
AK	Aggregate Kiln
AP	Asphalt Plant
BLB	Sulfate Black Liquor Recovery Boiler
CB	Commercial Boiler
CEM	Carbon Electrode Manufacturing
CK	Cement Kiln
CM	Charcoal Manufacturing
CRF	Carbon Regeneration Furnace
DBR	Drum and Barrel Reconditioning
HWI	Hazardous Waste Incinerator
IB[a]	Industrial Boiler
MET[b]	Metals Processing
MSWI	Municipal Solid Waste Incinerator
OB	Open Burning
SLB	Sulfite Liquor Recovery
SSI	Sewage Sludge Incinerator
UB	Utility Boiler
ISW	Industrial Solid Waste Incinerator Including Hospital Incinerators
WRI	Wire Reclamation
WFB	Wood-Fired Boilers

[a]Includes wood fired and coal (spreader stoker) boilers.

[b]Includes blast furnaces, ferrous and nonferrous foundries, secondary copper and aluminum smelters, and wire reclamation incinerators.

Figure 6-3. Source category codes to be used on sample labels.

RADIAN
CORPORATION

CHAIN-OF-CUSTODY - TIER 4

Project Name	Sample Dates	Episode Number	Special Handling Considerations
Samplers (Signature)	Test Site Name	Batch Number	

SCC Number	Radian Sample Code	Container No.	Date	Container Weight(g) of Volume (ml)	Remarks

Relinquished by: (Signature)	Affiliation: (Agency or Company)	Date/Time	Received by: (Signature)	Affiliation: (Agency or Company)	Date/Time
Relinquished by: (Signature)	Affiliation: (Agency or Company)	Date/Time	Received by: (Signature)	Affiliation: (Agency or Company)	Date/Time
Relinquished by: (Signature)	Affiliation: (Agency or Company)	Date/Time	Received by: (Signature)	Affiliation (Agency or Company)	Date/Time

Figure 6-4. Chain-of-custody form.

When the sample is taken, the sampler signs the custody record under chain of possession and also enters the date and time sampled. The chain-of-custody form must be placed inside the plastic pouch provided and taped to the inside lid of the shipping box. A chain-of-custody seal is placed on the outside of the shipping container once all labeling and package sealing have been completed (see Figure 6-2a for an example of the seal) so that the package cannot be opened without tearing the seal. If and when the sample is passed to a second party for transport, no signature will be required on the custody record. The bill of lading or air bill will serve as documentation.

The receiving party signs line 2 ~~of~~ the chain of possession record upon receipt. The receiver also enters his name and address in the "sample receiver" section. (When the sample is transferred to the Troika laboratory, the inclusive date will be closed by the Radian laboratory.

All Dioxin Shipment Record (DSR) forms will be completed by Radian at RTP once the ash samples have been composited. The DSR form will be completed for each sample site and checked to verify its accuracy against the shipping information received for individual sites. The use of the SCC DSR form at this point in the process will allow for a coordinated control point so that the ash samples can be effectively scheduled for analysis with SCC. Distribution of the five part DSR form will be the responsibility of Radian once the sample is composited.

6.4 SAMPLE SHIPMENT

For purposes of collecting and shipping ash samples for the EPA Tier 4 National Dioxin Study (Ash Sampling), a shipping container has been developed. This container measures 12 x 12 x 12 and will accommodate two 1-liter bottles.

The procedure for use of these containers is as follows:

1. Radian will ship the bottles in the container without markings on the box. Enclosed will be two bottles, the sampling procedure, and the required labels, forms, and Teflon tape for sealing the samples.

2. The sampler will remove all of the materials, collect the samples as specified in the Ash Sampling Program Plan and repack as follows:

   a. Seal the bottle lids with the enclosed teflon tape, stretch the tape around the lid, and label per the sampling procedure.

   b. Place the filled bottle in a bag and horse tail tie the bag.

   c. Place the bagged sample in the fitted box liner.

   d. Tape the plastic pouch with the chain-of-custody form and sampling data sheet to the inside lid of the box.

   e. Place the enclosed shipping label on the outside of the box per the diagram and tape securely around all four edges. Be sure not to cover any sample labeling.

   f. Notify Radian at (919) 541-9100 when shipping the samples. Please refer to Tier 4 - Ash Sampling.

There should be little confusion regarding box packaging as boxes will be form fitted with foam for the bottles. Due to gross weight limitations, ship only two samples per box.

All samples should be shipped immediately to Research Triangle Park, NC by Federal Express, or other expeditious means as provided with the enclosed shipping order. Sample boxes should be identified and labeled as shown in Figure 6-5.

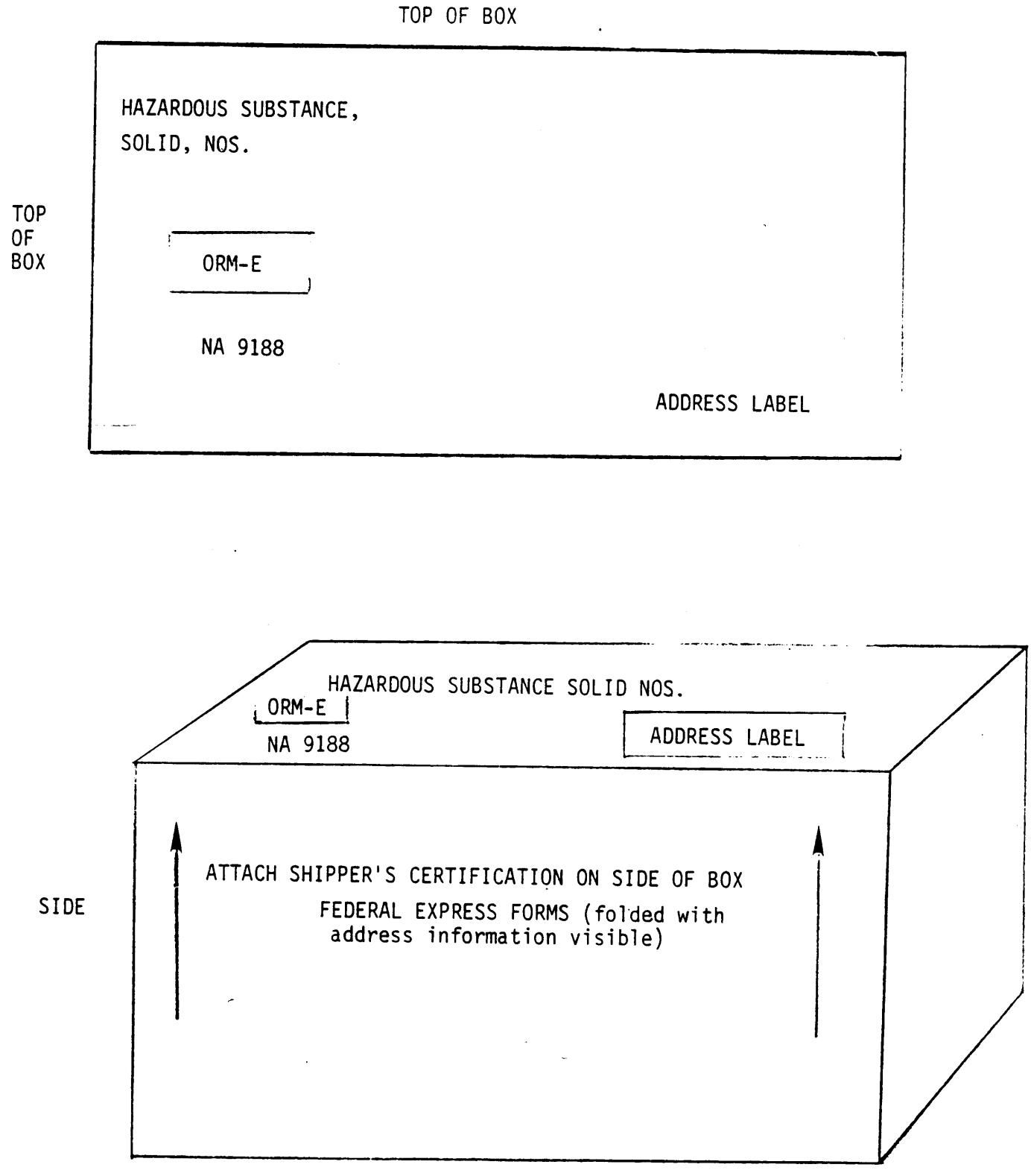

Figure 6-5. Sample box identification and markings.

Any questions may be directed to:

Radian Corporation
Post Office Box 13000
3200 E. Chapel Hill Blvd/Nelson Highway
Research Triangle Park, North Carolina 27709
(919) 541-9100

Attention: Andrew Miles or Bob Jongleux
Please reference: Tier 4 - Ash Sampling

6.5 SAMPLE CONTAINER PREWASHING

In order to prevent contamination of samples and to provide a consistent analysis basis, all sample containers must be precleaned using the same procedure. All sample bottles and materials in the sample kit have been precleaned for your convenience.

The sample bottle cleaning procedure is as follows:

USE DISPOSABLE GLOVES AND ADEQUATE VENTILATION

1. Soak all glassware in hot soapy water (Alconox^R) 50°C or higher.
2. Tap H_2O rinse (x3).
3. Distilled/deionized H_2O rinse (x3).
4. Chromerge rinse if glass, otherwise skip to 6.
5. HPLC H_2O rinse (x3).
6. Acetone rinse (x3), (pesticide grade).
7. Hexane rinse (x3), (pesticide grade).
8. Oven dry (110°C - 1 hr).
9. Cap containers with Teflon lids. Foil wrap the sampling equipment.

(Please read instructions on the reverse before completing)

1. REPORT NO.	2.	3. RECIPIENT'S ACCESSION NO.
EPA-450/4-84-014d		

4. TITLE AND SUBTITLE	5. REPORT DATE
National Dioxin Study Tier 4--Combustion Sources Ash Sampling Program	January 1985
	6. PERFORMING ORGANIZATION CODE
7. AUTHOR(S)	8. PERFORMING ORGANIZATION REPORT NO.
A. J. Miles, R. F. Jongleaux	
9. PERFORMING ORGANIZATION NAME AND ADDRESS	10. PROGRAM ELEMENT NO.
Radian Corporation P.O. Box 13000 Research Triangle Park, North Carolina 27709	B53B2K
	11. CONTRACT/GRANT NO.
	68-02-3850
12. SPONSORING AGENCY NAME AND ADDRESS	13. TYPE OF REPORT AND PERIOD COVERED
EPA, Office of Air Quality Planning and Standards Monitoring and Data Analysis Division Research Triangle Park, N.C. 27711	Final
	14. SPONSORING AGENCY CODE

15. SUPPLEMENTARY NOTES

EPA, Project Officer: William H. Lamason II

16. ABSTRACT

This document describes the Ash Sampling Program that will be conducted at selected combustion sources under Tier 4 of the National Dioxin Study. Flue gas ash samples will be collected and analyzed for 2,3,7,8-tetrachlorodibenzo-p-dioxin (2,3,7,8 TCDD), tetra- through octa-polychlorinated dibenzo-p-dioxins (PCDD), and tetra- through octa-polychlorinated dibenzofurans (PCDF). The activities that will be performed by EPA's Office of Air Quality Planning and Standards, the EPA Regional Offices, State and local agencies, and the EPA contractor, Radian Corporation, in the program are identified. Specific guidance is provided for the organizations that will perform the field sampling in the program.

17. KEY WORDS AND DOCUMENT ANALYSIS

a. DESCRIPTORS		b. IDENTIFIERS/OPEN ENDED TERMS	c. COSATI Field/Group
Ash Screening		Air Pollution Sampling	
Ash Sampling		Waste Sampling	
Combustion Source Sampling			
Dioxins	TCDD		
Furans	TCDF		
2,3,7,8 Tetrachlorodibenzo-p-dioxin	PCDD		
Polychlorinated dibenzofurans	PCDF		

18. DISTRIBUTION STATEMENT	19. SECURITY CLASS (This Report)	21. NO. OF PAGES
	Unclassified	60
	20. SECURITY CLASS (This page)	22. PRICE
	Unclassified	

EPA Form 2220-1 (Rev. 4-77) PREVIOUS EDITION IS OBSOLETE