EPA 450/4-92-010

# TECHNICAL ASSISTANCE DOCUMENT

## PERFORMANCE AUDIT PROCEDURES FOR OPACITY MONITORS

Prepared By

Keith R. Hazel
Steven J. Plaisances
James W. Peeler

Entropy Environmentalists, Inc.
Research Triangle Park, NC 27709

Contract No. 68-D1-0009
Work Assignment No. 38

Thomas J. Logan, Work Assignment Manager

Methods Research and Development Division

UNITED STATES ENVIRONMENTAL PROTECTION AGENCY
ATMOSPHERIC RESEARCH AND EXPOSURE ASSESSMENT LABORATORY
OFFICE OF RESEARCH AND DEVELOPMENT
RESEARCH TRIANGLE PARK, NC 27711

MARCH 1992

## DISCLAIMER

The information in this document has been funded by the United States Environmental Protection Agency under contract 68-D1-0009. It has been subjected to the Agency's peer and administrative review, and it has been approved for publication as an EPA document. Mention of trade names or commercial products does not constitute endorsement or recommendation for use.

## ABSTRACT

This manual contains monitor-specific performance audit procedures and data forms for use in conducting audits of installed continuous opacity monitoring systems (COMS's). General auditing procedures and acceptance criteria for various audit criteria are delineated. Practical considerations and common problems encountered in conducting audits are discussed, and recommendations are included to optimize the successful completion of performance audits.

Performance audit procedures and field data forms were developed for the following opacity monitors: (1) Lear Siegler Measurement Controls Corporation Dynatron 1100M and MC2000; (2) Lear Siegler Measurement Controls Corporation Model RM-41; (3) Lear Siegler Measurement Controls Corporation Model RM-4; (4) Dynatron Model 1100; (5) Thermo Environmental Instruments, Inc. Model 400; (6) Thermo Environmental Instruments, Inc. Model 1000A; (7) Thermo Environmental Instruments, Inc. Model D-R280AV; (8) Enviroplan Model CEMOP-281; (9) United Sciences, Inc. Model 500C; (10) Land Combustion Model 4500; and (11) DataTest Models 900A and 900RM. The concise step-by-step format of the audit procedures promotes a thorough evaluation of the quality of the monitoring data and the reliability of the opacity monitoring program.

Generic audit procedures have been included for use in evaluating COMS's with multiple transmissometers and combiner devices. In addition, several approaches for evaluating the zero alignment or "clear-path" zero response have been described. Although the zero alignment checks cannot usually be conducted during a performance audit, the zero alignment procedures have been included because this factor is fundamental to the accuracy of opacity monitoring data.

CONTENTS

Disclaimer..... ii
Abstract.....iii
Figures..... vi

1. Introduction..... 1-1
   1.1 Background..... 1-1
   1.2 Use of This Manual..... 1-2
   1.3 Approach and Limitations..... 1-4

2. General Audit Procedures..... 2-1
   2.1 Practical Considerations..... 2-1
   2.2 Pre-Audit Information..... 2-3
   2.3 Performance Audit Procedures..... 2-8

3. Performance Audit Procedures for Lear Siegler Measurement Controls Corporation Opacity Monitors..... 3-1
   3.1 Lear Siegler - Dynatron 1100M and MC2000 COMS's..... 3-1
   3.2 Lear Siegler Model RM-41 Transmissometer and Model 611 Control Unit..... 3-15
   3.3 Lear Siegler Model RM-4 COMS..... 3-33

4. Performance Audit Procedures for the Dynatron Opacity Monitor..... 4-1
   4.1 Dynatron Model 1100 Transmissometer..... 4-1

5. Performance Audit Procedures for Thermo Environmental Instruments, Inc. Opacity Monitors..... 5-1
   5.1 Thermo Environmental Instruments Model 400 Transmissometer and Model 500 Control Unit..... 5-1
   5.2 Thermo Environmental Instruments Model 1000A..... 5-12
   5.3 Thermo Environmental Instruments Model D-R280AV (Durag)..... 5-18

6. Performance Audit Procedures for Enviroplan Opacity Monitor..... 6-1
   6.1 Enviroplan Model CEMOP-281 (Durag)..... 6-1

7. Performance Audit Procedures for United Sciences, Inc. Opacity Monitor.. 7-1
   7.1 United Sciences, Inc. Model 500C Opacity Monitor.....7-1

8. Performance Audit Procedures for the Land Combustion Opacity Monitor.... 8-1
   8.1 Land Combustion Model 4500 Opacity Monitor..... 8-1

9. Performance Audit Procedures for DataTest Monitors..... 9-1
   9.1 DataTest Models 900A and 900RM..... 9-1

10. Performance Audit Procedures for COMS with Combiners..... 10-1
    10.1 Calculation of Stack-Exit Opacity for Combiner Systems..... 10-1
    10.2 General Audit Procedures..... 10-4

11. Zero Alignment Checks..... 11-1
    11.1 Off-Stack Zero Alignment..... 11-1
    11.2 On-Stack Zero Alignment..... 11-2
    11.3 Alternate Zero Alignment Approaches..... 11-3

(Continued)

CONTENTS (continued)

Appendix A. Lear Siegler Measurement Controls Corporation - Dynatron 1100M and MC2000 Data Forms

Appendix B. Lear Siegler Measurement Controls Corporation - Model RM-41 Audit Data Forms

Appendix C. Lear Siegler Measurement Controls Corporation - Model RM-4 Audit Data Forms

Appendix D. Dynatron Model 1100 Audit Data Forms

Appendix E. Thermo Environmental Instruments Model 400 Audit Data Forms

Appendix F. Thermo Environmental Instruments Model 1000A Audit Data Forms

Appendix G. Thermo Environmental Instruments Model D-R280 AV Audit Data Forms

Appendix H. Enviroplan Model CEMOP-281 Audit Data Forms

Appendix I. United Sciences, Inc. Model 500C Audit Data Forms

Appendix J. Land Combustion Model 4500 Audit Data Forms

Appendix K. DataTest Models 900A and 900RM Audit Data Forms

## LIST OF FIGURES


| Figure No. | | Page No. |
|---|---|---|
| 2-1. | Opacity Pre-Audit Data Form | 2-4 |
| 3-1. | Lear Siegler Measurement Controls Corporation Dynatron 1100M Transmissometer | 3-2 |
| 3-2. | Lear Siegler Measurement Controls Corporation Dynatron 1100M Control Unit | 3-3 |
| 3-3. | Lear Siegler Measurement Controls Corporation MC2000 Transmissometer | 3-5 |
| 3-4. | Lear Siegler Measurement Controls Corporation RM-41 Transmissometer | 3-16 |
| 3-5. | Lear Siegler Measurement Controls Corporation RM-41 Control Unit (Model 611) | 3-18 |
| 3-6. | Lear Siegler Measurement Controls Corporation RM-41 Control Unit Circuit Board Arrangement | 3-21 |
| 3-7. | Lear Siegler Measurement Controls Corporation RM-41 Transceiver | 3-26 |
| 3-8. | Lear Siegler Measurement Controls Corporation RM-41 Junction Box (J-Box) | 3-28 |
| 3-9. | Lear Siegler Measurement Controls Corporation RM-4 Transmissometer | 3-34 |
| 4-1. | Dynatron Model 1100 CEMS Components | 4-2 |
| 5-1. | Thermo Environmental Instruments Model 400 Transmissometer | 5-2 |
| 5-2. | Thermo Environmental Instruments Model 500 Control Unit | 5-3 |
| 5-3. | Thermo Environmental Instruments Model D-R280 AV Transmissometer | 5-19 |
| 5-4. | Thermo Environmental Instruments Model D-R280 AV Control Unit | 5-20 |
| 5-5. | Thermo Environmental Instruments Model D-R280 AV Junction Box (J-Box) | 5-25 |
| 6-1. | Enviroplan CEMOP-281 Transmissometer | 6-2 |
| 6-2. | Enviroplan CEMOP-281 Control Unit | 6-3 |


(continued)

LIST OF FIGURES (continued)


| | | |
|---|---|---|
| 7-1. | United Sciences, Inc Model 500C Transmissometer | 7-2 |
| 7-2. | United Sciences, Inc Model 500C Control Unit | 7-4 |
| 7-3. | United Sciences, Inc Model 500C Junction Box (J-Box) | 7-9 |
| 8-1. | Land Combustion Model 4500 Transmissometer | 8-2 |
| 8-2. | Land Combustion Model 4500 Control Unit | 8-4 |
| 8-3. | Land Combustion Model 4500 Transceiver with Lamp Access Cover Removed; exaggerated view of "AUTO COMP" Switch | 8-12 |
| 11-1. | Alternate Zero Alignment Procedure Using Zero Alignment Jig | 11-5 |

# SECTION 1

# INTRODUCTION

## 1.1 BACKGROUND

In 1975, the U. S. Environmental Protection Agency (EPA) first promulgated specific effluent monitoring requirements for several source categories subject to the Standards of Performance for New Stationary Sources. Affected sources were required to install, operate, and maintain systems for continuous monitoring of effluent opacity. At the same time, EPA also promulgated similar provisions necessitating revisions to State Implementation Plans to include opacity monitoring requirements for selected source categories. Since that time, Federal, state, and local air pollution control agencies have expanded the applications of continuous opacity monitoring systems (COMS's) by adopting monitoring requirements for additional source categories, by requiring monitoring in operating permits, and through the use of other source-specific mechanisms. In most cases, the source owner or operator must periodically report data related to excess emissions and monitor performance to the appropriate control agency. Excess emissions data are generally used as an indication of: (1) whether proper operation and maintenance practices for process and control equipment are being used; (2) the degree of compliance with applicable opacity standards; (3) particulate emission levels; and (4) the need for an inspection of the source.

Regardless of the particular monitoring requirements or the control agency's use of the data, issues affecting the quality of the COMS data are of concern to both the control agency and source representatives. In almost all cases, the source owner or operator is required to demonstrate that the COMS complies with Performance Specification 1 of Appendix B, 40 CFR 60. This demonstration (referred to as a performance specification test) is usually completed shortly after the COMS becomes operational and serves to ensure that the monitoring system is properly installed and capable of providing reliable data.

EPA regulations, as well as most state and local regulations, include minimum operating procedures that the source owner or operator must follow after completing the initial performance specification test. Typically, source operators are required to check the calibration of the COMS at two points at least once daily. These checks are usually performed at zero percent opacity and at an upscale point called the span check. For sources subject to EPA requirements in 40 CFR 60, cleaning of the optical surfaces exposed to the effluent stream and adjustment of the monitor are required if the zero or span check responses exceed two times the 24-hour drift limits in Performance Specification 1. Most state and local regulations are similar. Except for the zero and span check requirements, EPA and most state and local monitoring regulations do not require the source operator to conduct tests or otherwise periodically assess the quality of the opacity monitoring data. However, most monitoring regulations require the source owner or operator to properly operate and maintain the COMS, to keep records of all adjustments and repairs to the monitoring system, and to submit periodic reports to the control agency (i.e., quarterly excess emissions reports).

A performance audit provides a relatively simple and quick method of obtaining an objective evaluation of opacity monitor performance. Audits may be conducted to assess the quality of the data provided by the COMS and/or to identify operation and maintenance problems that may impact the reliability of opacity monitoring results. A performance audit provides a quantitative evaluation of monitor performance in terms of the accuracy and precision of the data provided. Since it is not feasible to perform a relative accuracy test by obtaining independent effluent measurements for comparison with the measurements provided by an installed opacity monitor, a series of checks of the individual monitoring system components is conducted. Based on the results of these checks, an assessment of the performance of the entire monitoring system can be made.

Audits of COMS's may be conducted by either the control agency or source personnel. The control agency may conduct performance audits at randomly selected sources or at sources where opacity monitoring problems and/or high levels of excess emissions are indicated in quarterly excess emissions reports. Source personnel may conduct performance audits on a routine basis as part of a quality assurance program, or when specific concerns arise regarding the validity of the opacity monitoring data.

## 1.2 USE OF THIS MANUAL

This manual provides detailed procedures for conducting performance audits of COMS's. It updates and replaces the information and procedures contained in an earlier document, "Performance Audit Procedures for Opacity Monitors," (EPA 600/8-87-025, April 1987). The revised procedures include additional types of monitors and address changes in contemporary monitoring instrumentation.

A two-person team should perform the audit; however, the procedures in this manual have been designed so the audit can be conducted by a single person who has a basic understanding of monitor operation. Relatively inexperienced personnel can conduct audits after minimal field training by carefully following the audit instructions.

Section 2 of this manual discusses practical problems and considerations in conducting audits and the gathering of preliminary information prior to the audit. Section 2 also presents a discussion of general opacity monitor audit procedures and the evaluation of audit results.

Sections 3 through 9 provide monitor-specific information and step-by-step audit procedures for the most commonly encountered opacity monitors. These procedures can often be applied to slightly different configurations of the type of monitor for which they were written, or to a monitor which is identified by more than one make or model number. Table 1-1 is provided as a quick reference to help the auditor match the type of monitor being audited to the appropriate document subsection. Provided in the appendices to this document are monitor-specific data forms (coded to correspond with the step-by-step instructions). Use of these data forms will assist the auditor in recording all of the necessary information and in calculating the audit results.

TABLE 1-1. CROSS-REFERENCE OF COMS AUDIT PROCEDURES

| | DOCUMENT SUBSECTION | | | | | | | | | | |
|---|---|---|---|---|---|---|---|---|---|---|---|
| MONITOR TYPE | 3.1 | 3.2 | 3.3 | 4.1 | 5.1 | 5.2 | 5.3 | 6.1 | 7.1 | 8.1 | 9.1 |
| LSMCC[1] Dynatron Model 1100M | x | | | | | | | | | | |
| LSMCC[1] Model MC2000 | x | | | | | | | | | | |
| Dynatron Model 1100M | x | | | | | | | | | | |
| LSMCC[1] Model RM-41 | | x | | | | | | | | | |
| LSI[2] Model RM-41 | | x | | | | | | | | | |
| LSMCC[1] Model RM-4 | | | x | | | | | | | | |
| LSI[2] Model RM-4 | | | x | | | | | | | | |
| Dynatron Model 1100 | | | | x | | | | | | | |
| TEI[3] Model 400[4] | | | | | x | | | | | | |
| Contraves Goerz Model 400[4] | | | | | x | | | | | | |
| TEI[3] Model 1000A | | | | | | x | | | | | |
| EDC[5] Model 1000A | | | | | | x | | | | | |
| TEI[3] Model D-R280 AV | | | | | | | x | | | | |
| Enviroplan CEMOP-281 | | | | | | | | x | | | |
| Durag Industrie Elektronik, GMBH[4] | | | | | | | x | x | | | |
| USI[6] Model 500C | | | | | | | | | x | | |
| Land Combustion Model 4500 | | | | | | | | | | x | |
| DataTest Model 900A | | | | | | | | | | | x |
| DataTest Model 900RM | | | | | | | | | | | x |
| DataTest Model 900RMD | | | | | | | | | | | x |

[1]Lear Siegler Measurement Controls Corporation (LSMCC)
[2]Lear Siegler, Inc. (LSI)
[3]Thermo Environmental Instruments (TEI)
[4]Control units may vary
[5]Environmental Data Corporation (EDC)
[6]United Sciences, Inc. (USI)

Section 10 describes performance audit procedures for use in evaluating COMS's that include multiple duct mounted transmissometers and a combiner device for computing the equivalent combined stack-exit opacity. A generic approach is presented for conducting audits of COMS's with combiners. These procedures require that the auditor understand the monitor-specific audit procedures for COMS's with a single transmissometer.

Section 11 discusses several approaches for checking the zero alignment of the opacity monitoring system. The zero alignment checks cannot usually be conducted during a performance audit; these procedures are included because of the importance of the zero alignment to the accuracy of the opacity monitoring data.

The inexperienced auditor may find some of the discussions in Sections 1 and 2 somewhat overwhelming at first. Review of these materials after working through the monitor-specific information for at least one monitor should eliminate confusion regarding the basic approach and terminology.

## 1.3 APPROACH AND LIMITATIONS

COMS performance audits involve a series of checks of monitoring system components and other factors that affect the operational status and accuracy of the opacity measurements. The first series of checks are performed at the monitor control unit/data recording location, which is usually in the boiler or process control room. Subsequent checks must be performed at the transmissometer location on the stack or duct. In general, performance audit procedures involve the following consecutive checks:

(1) Monitor Component Analysis

- An attempt is made to verify the accuracy of the path length correction factor used to convert measurements obtained at the monitoring location to the equivalent opacity observed at the stack exit. Ideally, two issues are considered: (a) whether the proper dimensions were used in establishing the path length correction factor, and (b) whether the value of the path length correction factor used by the monitor is consistent with the calculated value. Note that in some instances, practical constraints may prevent addressing these issues during a performance audit.

- Fault lamp indicators on the COMS control unit are checked to determine whether various monitor parameters are operating within preset limits. Usually these limits are established by the monitor manufacturer; however, for some monitors, the user may select activation limits for the fault circuits.

- Various internal electronic checks are performed in accordance with the recommendation of the monitor manufacturer to determine the operational status of the monitor. These checks are performed using the controls and meters of the monitoring system. The use of external electronic test equipment is generally beyond the scope of a performance audit.

- The responses of the COMS to the daily zero (low range) and span check is evaluated using both the control unit panel meter and the permanent data recorder.

(2) Transmissometer Maintenance Analysis

- The optical alignment of the transmissometer (transceiver and reflector) is checked using the alignment sight of the monitor. The results of this check are considered to be indicative of the mechanical stability of the monitor mounting and the adequacy of on-stack component maintenance activities.

- The dust accumulation on the optical surfaces of the transmissometer is checked to determine the status of the purge air system and the adequacy of the frequency of lens cleaning. This determination is based on the difference in the opacity read before and after cleaning of the optical surfaces exposed to the effluent stream. The results of this check may be adversely affected by fluctuations in the effluent opacity.

(3) Calibration Error Analysis

- The linearity of the COMS is determined relative to a series of neutral density filters which have opacity values above and below the emissions standard. For most monitors, this test is performed using an audit device that simulates the instrument clear path zero setting and allows insertion of the filters into the light path. For other monitors, the calibration error determination is accomplished by evaluating the COMS response to the superposition of audit filters and the effluent opacity. In either case, calibrated neutral density filters are inserted into the light path of the transmissometer and the corresponding response of the monitoring system is determined from the permanent data recorder.

The purpose of the performance audit is to provide a basis for evaluating the accuracy and precision of the monitoring data; however, the audit procedures do not provide a single result which is representative of the overall performance of the monitor. Instead, the series of steps described above serves to identify problems which detract from the accuracy of the opacity measurements. In the absence of such problems, the opacity measurements are assumed to be accurate.

The results of the calibration error check of an installed COMS do not provide a measure of the absolute accuracy of the monitoring data collected prior to the audit for two reasons. First, the presence of the effluent opacity during the audit prohibits detection of any offset or error in the clear-path zero response of the monitor. A determination of the absolute accuracy of a COMS can only be accomplished by combining the results of a performance audit with the results of an independent zero alignment check (e.g., determination of the degree of agreement between the simulated zero response and the true zero response of the monitor under clear-path conditions). Normally, the zero alignment check is beyond the scope of a performance audit (see Section 11).

Second, since the transmissometer optics are cleaned prior to conducting the calibration error test, the results of the check do not include any measurement bias due to accumulation of particulate material on the optical windows of the transmissometer. To estimate the accuracy of the opacity measurements prior to the audit, superposition of the results of the calibration error check and the dust accumulation checks would be necessary. Consideration of zero and span errors are not necessary, provided that no adjustments to the monitor are made during the audit.

# SECTION 2

# GENERAL AUDIT PROCEDURES

This section provides an overview of continuous opacity monitoring system (COMS) performance audit procedures as a supplement to the monitor-specific procedures presented in Sections 3 through 9. Practical considerations affecting COMS performance evaluation programs are addressed in Section 2.1. Information that should be acquired before conducting the audit is identified in Section 2.2. A discussion of general audit procedures, acceptance limits for various audit criteria, and the evaluation of audit results is provided in Section 2.3.

## 2.1 PRACTICAL CONSIDERATIONS

Several practical considerations are addressed in this section because questions regarding these matters arise frequently.

Human Resources - Performance audits may be conducted by one person or by a team of at least two people. If one person performs the audit, a sufficient period of time must be allowed to elapse during each action taken at the transmissometer location (e.g., cleaning of windows, insertion of filters, etc.) to allow the monitoring system to obtain and clearly record the resulting response. This period should be approximately two minutes for monitors recording instantaneous opacity data on a strip chart recorder. For a COMS that records only integrated opacity data, this period must be, at a minimum, slightly longer than twice the integration period. This ensures that at least one uninterrupted data average is recorded for each step of the audit. For a COMS that records only 6-minute averages, a minimum of 13 minutes must elapse during each action that the auditor performs. Conducting an audit under these circumstances would require a single auditor to remain at the monitoring location for at least five hours. Since this is usually impractical, the audit should be performed by two people in cases where the COMS cannot record instantaneous or short term data averages. A second problem with having one person conduct COMS audits is that the auditor has no real-time feedback to indicate when specific steps in the audit should be repeated because of uncertain results. Only after the audit is complete can the auditor ascertain if any or all of the transmissometer location checks need to be repeated.

Using a team of at least two people (one at the monitoring location and one at the control unit/data recording location) greatly reduces the time required to complete the necessary steps at the monitoring location and eliminates the above mentioned feedback problems (assuming that effective communication between the two locations is established). The person at the control unit does not have to be trained in auditing monitors because recording the monitor responses and advising the auditor to continue with the next step is all that is required. In many cases, a single control agency representative can perform the audit in an effective manner, provided that a source representative is willing to relay the COMS responses from the control unit and data recording device to the auditor. Source personnel are usually willing to provide this assistance. However, control agency representatives who plan to

conduct audits in this manner should request the assistance of plant personnel in advance of the audit to ensure that personnel are available and willing to perform specific activities. The auditor should also ensure that the plant representative determines the monitor responses from the appropriate data recording device and that the data are interpreted and recorded correctly.

Communication - Communication between the monitoring location and the control unit/data recorder location is essential when audits are conducted using the team approach. Some power plants have hard-wired communication lines between the two locations that can be used by the auditor. In some cases, plant personnel will loan radios to the audit team or will operate radios for the auditors. However, the availability of such equipment at power plants and other stationary sources is generally very limited. Control agency auditors should not make assumptions concerning the availability or use of such equipment; they should discuss the need for communications equipment with plant personnel in advance or provide their own.

Communication between various locations at stationary sources using short wave radios is often severely restricted or impossible because of electrical interference and shielding problems. The use of FM radios is preferred. It is imperative that non-plant personnel obtain clearance to use radio equipment prior to its use at any stationary source. In some cases use or even possession of radios in the plant control room is prohibited, since these radios may interfere with instrumentation or control signals necessary to operate the plant safely. The consequence of unauthorized use of radios can be significant.

Computer System Operations - Most modern plants are equipped with computerized data acquisition systems. The operation and control of computerized systems may be complex, and the output format may be confusing when first encountered. Control agency personnel who are conducting performance audits should not expect to fully understand how such systems operate. Plant personnel should be requested to enter the control commands necessary to facilitate acquisition of the appropriate output. If the Agency auditor is going to record monitor responses, an adequate explanation of the computer output should be obtained, or the auditor should request that source personnel determine the monitor responses from the computer output for each step of the audit.

Equipment Damage Liability - Auditing of COMS's creates a situation where there is a remote chance that the monitoring equipment could be damaged. Control agency personnel should determine their agency's policy with respect to assuming liability in advance of the audit. In the event that relevant policy prevents the assumption of liability, control agency personnel should adopt a "hands off" approach and have qualified plant personnel perform the audit under the auditor's direct supervision. Plant contacts should be notified in advance of this situation so that appropriate personnel will be available at the time the audit is conducted.

Organizational and Labor Constraints - The auditor should be mindful of protocol when interacting with plant personnel and various corporate organizations. Since the operation and maintenance of the COMS and reporting of opacity data may involve personnel from several departments within the organization (Corporate Environmental, Plant Environmental, Operations, Instrumentation, Maintenance, etc.), the auditor should plan to conduct a brief

initial meeting with representatives of the concerned organizations in order to describe the audit procedures, discuss possible actions resulting from the audit, and to answer questions. Also, the auditor must be aware, in advance, of restrictions resulting from union limitations and from other plant specific rules enforced on the job site. For example, the auditor may not be allowed to press buttons or even touch the monitor controls. In addition, break, meal, and quitting times may be rigidly enforced, thereby restricting the auditor's access to plant equipment and personnel.

Preserving Objectivity - Regardless of whether control agency personnel or source representatives conduct the audit, it will be advantageous to all parties if several simple steps are taken to preserve the objectivity of the auditors. The reference values for the zero (or low range) and span checks of the monitor should be determined prior to initiating the zero or span checks. Also, the calculated values of the neutral density filters should not be divulged to the person recording the monitor responses for the calibration error test until after the test is completed.

## 2.2 PRE-AUDIT INFORMATION

The successful completion of an opacity audit requires certain information about the source, the monitor, and the data recording system. In the case of a control agency, this information can usually be obtained from source files before the auditor reaches the test site. During the audit, the information should be verified and updated as necessary. If the auditor cannot acquire information on the source from existing files, he/she should utilize the opacity audit data form (Figure 2-1) to compile the necessary information prior to or during the audit. This form should become part of the maintained and updated data base for the particular source. The information categories on this form are described as follows:

Critical Information: Tells the auditor at a glance the when, what, where, and who of the audit without having to search through the data form.

Source Identification: This information identifies the particular facility to be audited. The corporate name, the plant or station name, the mailing address, the appropriate telephone numbers, and the principal plant contact should be listed.

Corporate Contact: Many source organizations have corporate personnel charged with overseeing environmental activities at the satellite facilities. The corporate contact is often a valuable source of information when setting up an audit. The corporate contact generally wishes to be notified of any plans to audit a COMS under his/her oversight and should be given access to the COMS audit results. The names, addresses, and telephone numbers of the involved corporate environmental personnel should be listed on the pre-audit data form.

Additional Contacts: Source personnel concerned with monitor operation, maintenance, calibration, servicing, or data reduction should be identified as they are encountered. This information will aid the auditor in becoming acquainted with the source's monitoring program. It may also be necessary to contact some of these individuals to answer specific questions as they arise.

## OPACITY PRE-AUDIT DATA FORM

**CRITICAL INFORMATION**

PERSON TO CONTACT UPON ARRIVAL: _____ FINAL AUDIT DATE: _____

AT (GATE, OFFICE, ETC.): _____ TIME: _____

MONITOR TYPE: _____ UNIT #: _____

SOURCE NAME: _____

**SOURCE IDENTIFICATION**

CORPORATION: _____

PLANT OR STATION NAME: _____

PRINCIPLE CONTACT: _____ TELEPHONE NO.: _____

PLANT MAILING ADDRESS: _____ PLANT TELEPHONE NO.: _____

_____

_____

**CORPORATE CONTACT**

NAME: _____

TITLE: _____

MAILING ADDRESS: _____

_____

_____

TELEPHONE NO.: _____

**ADDITIONAL CONTACTS**

1. NAME: _____
   AFFILIATION: _____
   TELEPHONE NO.: _____
2. NAME: _____
   AFFILIATION: _____
   TELEPHONE NO.: _____
3. NAME: _____
   AFFILIATION: _____
   TELEPHONE NO.: _____

**SOURCE DATA**

UNIT #: _____ OUTPUT (MW): (FROM PERMIT) _____

FUEL: _____ AIR POLLUTION CONTROL EQUIPMENT: _____

TYPICAL EFFLUENT OPACITY: _____

AVAILABILITY OF COMMUNICATIONS (RADIO, TELEPHONE, ETC.) BETWEEN MONITOR LOCATION AND CONTROL ROOM:

_____

AVAILABILITY OF PERSONNEL TO TAKE READINGS FROM OPACITY DATA RECORDER DURING AUDIT:

_____

Figure 2-1. Opacity Audit Data Form.

4408 9/91

## OPACITY PRE-AUDIT DATA FORM (CONTINUED)

**MONITOR LOCATION**

MONITOR LOCATION (STACK / DUCT): _____

DISTANCE FROM NEAREST FLOW OBSTRUCTION: _____ (UPSTREAM) _____ ((DOWNSTREAM)

HEIGHT (IN FEET): _____ (TO MONITOR) _____ (TOTAL STACK)

ACCESS TO SAMPLING LOCATION (LADDER, STAIRS, HOIST, ELEVATOR): _____

STACK / DUCT INSIDE DIAMETER: _____ (AT MONITOR LOCATION) _____ (STACK EXIT)

**MONITOR DATA**

MANUFACTURER / MODEL NO.: _____

MONITOR PRESET STACK EXIT CORRECTION FACTOR (BY MONITOR MANUFACTURER): _____

MONITOR ZERO AND SPAN VALUES (BASED ON MOST RECENT CALIBRATION): _____ (ZERO) _____ (SPAN)

COMBINER SYSTEM IN USE? _____

DATA RECORDING / LOGGING SYSTEM: _____

DATA FORMAT USED IN REPORTING TO A.Q. AGENCY (6-MIN / DAILY AVGS.): _____

AVAILABILITY OF INSTANTANEOUS MONITOR OUTPUT RECORD (METER, STRIPCHART, OR COMPUTER): _____

_____

RECENT REPAIRS / MODIFICATIONS / CALIBRATIONS: _____

_____

SOURCE EMPLOYEE MOST FAMILIAR WITH THE MONITORING SYSTEM: _____

_____

**COMMENTS**

_____

_____

_____

_____

_____

_____

| MONITOR LOCATION SCHEMATIC | OPACITY DATA SYSTEM SCHEMATIC |
|---|---|
| | |

Figure 2-1. (continued)

4408 9/91

Source Data: Information about the unit (output capacity, type of fuel, installed pollution control equipment, and typical effluent opacity) is included to provide a basis for a description of the plant. The output capacity should be taken from the most recent permit. It should be recorded in the units specified in the permit. Since communications between the opacity data recorder and transmissometer locations are vital in facilitating the completion of an audit, the auditor should note if the source can supply communications equipment (radios, telephone, etc.) and/or an employee to take readings from the opacity data recorder during the transmissometer portion of the audit.

Monitor Location: The monitor location should be specified with respect to height and distances from upstream and downstream flow disturbances. Enough information should be gathered to produce a schematic showing the location of the monitor within the effluent handling system. The most critical dimensions to be acquired are the stack exit inside diameter and the stack inside diameter (or duct width) at the transmissometer location. These values are used to calculate the stack exit correlation factor and should be known with an accuracy of $\pm 1.0$ inch. The form of access to the monitor location (ladder, stairs, elevator, etc.) should be known so that the auditor can budget his or her time if a lengthy climb is anticipated.

Monitor Data: The monitor should be identified by manufacturer and model number. If possible, the stack exit correlation factor, as well as zero and span values, should be identified either prior to or at the outset of the audit. Since the zero and span values may be renamed during the routine clear-path calibration procedures, these values should be verified prior to each audit.

The presence of a combiner system should be identified prior to the audit because specialized audit procedures are required for such systems.

The data recording/logging system should be identified and categorized as to stripchart, circular chart, and/or computer. Frequently, sources employ a combination of stripchart and computer data systems, with both instantaneous and six-minute averaged opacity data being recorded. If the source records only six-minute averaged data, the auditor should request that source personnel be available to reset the data acquisition system (DAS) or control unit integration periods to produce instantaneous opacity data for the duration of the calibration error analysis. The auditor should also note the averaging format of data reported to the control agency.

The auditor should inquire about any recent repairs, modifications, or calibrations of the monitor. This information will allow the auditor to anticipate problems that may be encountered.

In addition, the auditor should obtain the name of the source person most knowledgeable about the operation and maintenance of the monitor so that this person can be consulted for additional information.

Comments: General comments about the source or monitor that will facilitate the audit should be entered in this section of the form.

Monitor Location Schematic: The auditor should sketch the effluent system, including the heights and distances associated with the monitor location, along with upstream and downstream flow disturbances. The schematic should include the inside diameter of the stack at the stack exit and the inside diameter of the stack or duct at the transmissometer location.

Opacity Data System Schematic: The auditor should produce a schematic depicting the data transfer from the transmissometer to the control unit and the opacity data recorder. The format of the data (e.g., double pass transmittance, instantaneous path opacity, six minute averaged opacity) should be indicated at each stage of data collection, and the COMS components should be described (e.g., transmissometer, control unit, stripchart recorder, computer, printer, etc.).

## 2.3 PERFORMANCE AUDIT PROCEDURES

The following discussions define the specific parameters that are evaluated during a performance audit, describe how these parameters are measured, and present acceptance criteria for each item. Detailed information is presented in areas where problems are frequently encountered.

Opacity monitor performance audits provide an accurate and reliable indication of monitor performance through a simple and quick field test procedure. Specialized equipment necessary for a typical audit includes a monitor-specific reflector ("audit jig"), materials for cleaning the optical surfaces exposed to the effluent, and a set of three calibrated neutral density filters. All of the required equipment can be transported in a small suitcase. The auditor should also have safety equipment, including a hard hat, safety glasses, safety shoes, hearing protection, and any specialized equipment required by the plant or particular working environment.

The audit procedures are organized sequentially according to the location of the monitoring system components (moving from the control unit location, to the installed transmissometer, and then back to the control unit) so that a single individual can conduct the audit. As previously described, in many cases it is advantageous for multiple personnel to be involved in conducting the audit. The general audit procedures and acceptable limits for the various audit criteria are described below.

### 2.3.1 Stack Exit Correlation Error

Typically, the cross-stack optical path length of the installed opacity monitor is not equal to the diameter of the stack exit. To obtain a stack exit opacity value, the measured opacity at the monitor location is corrected to stack exit conditions through the use of a path length correction factor. Ideally, the stack exit correlation error is the percent error of the path-length correction factor used by the COMS relative to the correct path length correction factor calculated from actual stack or duct dimensions. The stack exit correlation error should not exceed $\pm 2$ percent.

Determining both the actual and the correct path length correction factors is often difficult in practice. Measurement of the monitoring path length and

In some cases, it is possible to measure the path length correction factor set within the COMS control unit. As an example, pressing the stack taper display button inside the Thermo Environmental Instruments Model 500 control unit will display the path length correction factor on the digital front panel meter of the unit. For the Lear Siegler RM41 opacity monitor, the path length correction factor can be determined by removing the opacity circuit board from the control unit and measuring the resistance of the R6 potentiometer using a digital voltmeter or equivalent device. The value of the correction factor is then calculated as the resistance across R6 divided by 400.

Removal of circuit boards and/or performance of internal electronic checks should only be performed by qualified personnel. It is recommended that these types of procedures not be attempted by control agency representatives. Diagnostic procedures of this type are generally beyond the scope of the audit and involve the use of equipment that may be unfamiliar to the control agency auditor. Where applicable, procedures that involve access to the internal electronics of the COMS are included as options in the monitor-specific sections of this document.

### 2.3.2 Fault Lamp Indicators

The control unit of a typical opacity monitor has several fault lamps that warn of monitor system malfunctions. These fault lamps are indicative of a variety of conditions, depending on the manufacturer. Most units use fault lamps to monitor the intensity of the optical beam, the quantity of dust on monitor optical surfaces, and the status of internal circuitry that maintains monitor calibration. In general, the monitor parameter indicated by a fault lamp is "out-of-specification" if the fault lamp is illuminated. However, monitor system malfunctions cannot be detected by fault lamps if the fault indicator circuitry is malfunctioning or if there is a problem with the lamp (i.e., missing or burned out bulb).

Many contemporary computerized data handling systems are capable of performing a variety of self-diagnostic tests and of displaying "error messages," "flags," or COMS malfunctions/faults in the permanent data record. The availability of error message outputs is dependent on both the type of monitor and the particular software that are used. In almost all cases, the explanation of error messages is either self-evident or can be adequately explained by the personnel responsible for COMS operation.

### 2.3.3 Auxiliary Electronic Checks

Some COMS's provide access to various electronic signals or circuits which are indicative of the monitor operational status. The output of these diagnostic signals is usually accessed through manipulation of the monitor control unit or data handling system. Such signals are inherently monitor-specific and tend to reflect parameters which the manufacturer identifies as critical to the accuracy of monitor calibration or operation. Examples of auxiliary electronics checks are the Lear Siegler RM-41 reference signal and the Dynatron Model 1100 lamp voltage, both of which are critical parameters in the operation of the respective monitors. Monitor-specific procedures for the evaluation of these parameters are provided in Sections 3 through 9 of this manual.

the stack exit inside diameter is usually not possible, and blueprints showing construction details are often not readily available at the source. The problem associated with determining the monitor path length and stack exit dimensions can be minimized by requesting the information in advance so that source personnel have time to locate the appropriate documentation. The flange-to-flange separation distance of the transceiver and reflector components (the actual distance that separates the transceiver and the retroreflector when they are mounted on the stack) should also be requested. This information helps to identify the majority of problems that are likely to be encountered in the calculation of path length correction factors because the most common mistake is the use of the flange-to-flange separation distance in place of the stack or duct inside diameter. (The flange-to-flange separation distance is always greater than the internal diameter of the stack or duct at the monitoring location, and is used in establishing the proper path length for conducting off-stack, clear-path calibrations of the opacity monitor.) Unless the reported dimensions are obviously in error, the dimensions provided by source personnel should be used to calculate the path length correction factor. The applicable equations are provided in the monitor-specific sections of this document.

The auditor must attempt to determine the value of the path length correction factor that is used by the COMS. Two approaches may be used: (1) the auditor may be able to determine the value of the correction factor preset by the manufacturer, or (2) in some cases, the auditor may be able to directly measure the path length correction factor set within the COMS.

The value of the path length correction factor preset by the manufacturer is sometimes indicated on the control unit or included in the documentation provided with the monitor. However, this information is sometimes unavailable or is ambiguous. In such cases, it is not possible to determine whether the correct value was used by the monitor manufacturer. If the correction factor cannot be determined as described below, the audit report should indicate that the stack exit correlation error was not determined, and the path length correction factor calculated by the auditor should be used in all subsequent audit calculations.

Any error associated with the value of the path length correction factor will result in a systematic, non-linear bias in the mean differences obtained for the low, mid, and high range calibration error checks. (In the absence of other problems, errors in the path length correction factor will result in increasing errors with increasing opacity.) When the audit results indicate such a bias, the auditor can, as a troubleshooting technique, calculate a path length correction factor that would provide a mean difference of zero for the mid range filter. The auditor can then use this path length correction factor to recalculate the low and high range calibration error check results. If the systematic bias in the calibration error results is removed, it is likely that the problem with the monitor is due to an error in the path length correction factor. Note that when other problems with the monitor are found (e.g., zero offset, excessive span error, misalignment, etc.), use of the above calculation procedure to evaluate errors in the path length correction factor becomes significantly more complicated, if not impossible. Therefore, it is strongly recommended that the other problems be resolved prior to determining if the path length correction factor is incorrect.

### 2.3.7 Monitor Alignment Error

The optical alignment of the transmissometer is critical in maintaining accurate opacity measurements. Misalignment of the measurement beam can cause erroneously high opacity readings because a significant portion of the measurement beam is not returned to the measurement detector. Most opacity monitor manufacturers include provisions for an optical alignment check either as a standard feature or as an option. Monitor alignment errors are typically observed as an off-center light beam when looking into the monitor's alignment sight.

### 2.3.8 Optical Surface Dust Accumulation

The amount of dust found on the optical surfaces of the transmissometer is quantified by recording the effluent opacity before and after each exit window is cleaned. The optical surface dust accumulation is excessive if, after cleaning the optical surfaces, the total reduction in apparent opacity (i.e., the sum of transceiver and reflector dust accumulation) exceeds 4 percent opacity.

The results of this check may be adversely affected by fluctuations in the effluent opacity over the time period required to clean the exit windows and obtain the opacity measurements. The auditor should use caution when using instantaneous opacity measurements to represent the effluent opacity; in some cases, average values may provide more representative results. In addition, if the windows are very clean when the audit is conducted, the auditor may actually increase the particulate matter on the optical surfaces rather than decrease it. The auditor should use the following procedures:

(a) For monitors with zero reflectors (e.g., Lear Siegler RM-4, RM-41, Enviroplan CEMOP 281, etc.), the auditor should clean the reflective side of the zero mirror when cleaning the transceiver window. If the monitor is equipped with automatic zero compensation, whenever possible, the zero compensation should be reset after cleaning the transceiver window and again after cleaning the zero reflector. If this is not practical, the zero compensation should be reset after cleaning both the transceiver and zero reflector windows. Resetting the zero compensation between cleaning the optical surfaces provides an independent indication of whether dust has accumulated on each of the surfaces. Since the bias introduced into the effluent opacity measurements by zero compensation becomes increasingly negative as the bias resulting from dust accumulation on the two optical surfaces becomes increasingly positive, the auditor must be careful when comparing changes in the zero compensation level with apparent changes in the effluent opacity.

(b) For all monitors, the auditor should determine whether the apparent effluent opacity decreases after cleaning each optical surface. (This is usually impractical if only one person performs the audit.) An increase in the apparent effluent opacity indicates that either: (1) effluent opacity fluctuations have affected the results or (2) the auditor has inadequately cleaned the optical surfaces. When an increase in the apparent effluent opacity

### 2.3.4 Panel Meter Checks

Most COMS's are equipped with an analog or digital panel meter on the face of the control unit. Some COMS's are also equipped with an analog meter at the transceiver location. These meters may be useful as a reference when making adjustments to the monitor. The accuracy of the panel meter may be checked, and a panel meter correction factor can be calculated for each type of measurement which can be displayed on the panel meter (i.e., opacity and optical density for most monitors and input current signals for some monitors). The panel meter correction factors are the ratio of the panel meter responses to the specified values for the opacity filter, input signal, or optical density filter. Results within ±2 percent (ratios within the range of 0.98 to 1.02) are considered acceptable.

The panel meter correction factors (scale factors) should only be determined when source personnel use the panel meter to check or make significant adjustments to the COMS. It is not necessary to determine the panel meter factors for parameters that are not used to assess monitor performance by source personnel.

### 2.3.5 Zero and Span Errors

The zero and span errors are the differences between the zero (low range) and span reference calibration values and the corresponding COMS responses. The COMS responses must be determined from the permanent data recorder that provides the basis for emissions data reported to the applicable control agency. (The zero and span errors are the same as the results of the required daily zero and span checks, except that they are performed during the audit rather than on the normal calibration schedule.)

40 CFR 60.13 states that the COMS shall, as a minimum, be adjusted whenever the 24-hour zero drift or the 24-hour span drift exceeds two times the limits of the applicable performance specification (Performance Specification 1). Thus, for sources subject to EPA regulation, adjustment of the COMS is required when the drift exceeds ±4% opacity. For sources subject to state or local requirements, the acceptance limits for zero and span errors are generally consistent with the applicable federal regulations.

### 2.3.6 Zero Compensation Limit

Some COMS's are equipped with a circuit or other means of automatically adjusting the monitor calibration to compensate for drift in the monitor's response to the simulated zero opacity condition. This automatic adjustment (zero compensation) is designed to account for dust accumulation on the optical surfaces of the transceiver. The acceptable limit for zero compensation is ±0.018 OD, which is equivalent to ±4% opacity. This value is consistent with the limitation imposed by EPA regulations contained in 40 CFR 60.13 (d)(1):

> "For continuous monitoring systems measuring opacity of emissions, the optical surfaces exposed to the effluent gases shall be cleaned prior to performing the zero and span drift adjustments except that for systems using automatic zero adjustments. The optical surfaces shall be cleaned when the cumulative automatic zero compensation exceeds 4 percent opacity."

occurs, the auditor should reclean the optical surfaces and recheck the effluent opacity.

(c) For all monitors, an apparent increase in the effluent opacity after cleaning an optical surface results in a negative quantity of accumulated dust on that optical surface. Presuming that the auditor has recleaned the optics and rechecked the effluent opacity, this nonsensical result can be attributed to variations in the effluent opacity. The negative result should be ignored; "negligible" dust accumulation should be stated in the report; and "zero" rather than the actual negative value should be used in calculating the total quantity of dust deposited on optical surfaces.

### 2.3.9 Calibration Error Checks

To perform the calibration error check, the response of the COMS to the known opacity values of three calibrated neutral density filters is determined. (The values of the neutral density filters are corrected to stack exit conditions by means of the path length correction factor used by the COMS.) For most monitors, this check is performed using an audit device that simulates the COMS's clear-path zero setting while allowing subsequent insertion of neutral density filters into the light path. For other monitors, the calibration error check is performed by conducting an incremental calibration procedure (i.e., superimposing the audit filters onto the effluent opacity). Five runs are performed for both types of calibration error checks (i.e., each filter is placed in the light path five times). The low, mid, and high range calibration error results are computed separately as the mean difference plus the 95 percent confidence coefficient calculated from each of the three data sets. The calibration error check results are acceptable if the calculated results for each data set are within $\pm 3$ percent opacity.

The following additional procedures are applicable to calibration error checks:

(a) For all checks performed using a reflective audit device, the device is installed on the COMS and adjusted to provide a zero response (0-2% opacity). Each of the three filters is placed in the light path five times and the response of the COMS to each filter is taken from the appropriate data recording device. The calibration error results will be adversely affected if the zero value provided by the audit device changes during the course of the 15 filter measurements. (Vibration at the monitoring location or accidentally bumping the iris adjustment lever of the audit device can cause such a change; these situations occur quite frequently.) Therefore, at a minimum, the zero value produced by the audit device should be rechecked at the end of the calibration error test. If the difference between the "post test" and "pretest" zero values is greater than one percent opacity, the entire test should be repeated. It is recommended that the auditor recheck the audit device zero value after each set of three filter measurements to ensure that the zero value is stable. If the zero has drifted by more than one percent opacity, discard the data collected during the previous 3-filter test run, reset the zero to the "pretest" value, and continue the calibration error test. This practice allows

the auditor to discover a zero drift problem earlier and reduces the number of measurements that must be repeated.

(b) For COMS's that do not allow the installation of an audit device, the calibration error check is performed by superimposing a series of three calibrated audit filters onto the effluent opacity (the incremental calibration error procedure). The calculation procedure requires that the average of "before" and "after" effluent opacity readings be mathematically combined with the filter value in order to determine the expected or "correct" response. Thus, variations in the effluent opacity during each filter measurement will affect the accuracy and precision of the calibration error test results. Short term effluent opacity spikes present the greatest problem. Therefore, each instantaneous effluent opacity measurement and each filter measurement must be obtained as quickly as possible. Two-way communication between the monitoring location and the control unit location is required in this situation. When using this procedure, it is advantageous for the auditor to watch the panel meter for about 15 minutes before starting the test in order to recognize repeating patterns of opacity fluctuations such as those caused by activation of the rappers in the last stage of an electrostatic precipitator.

When a run of responses to the audit filters deviate from the mean by more than 1 to 2 percent opacity, the 3-filter run in question should be repeated. The run or filter reading should also be repeated if the "before" and "after effluent opacity measurements vary by more than 2 to 3 percent opacity. It is usually possible to get five reasonable measurements of each filter within seven attempts. The decision to accept or reject particular filter measurements is subject to the auditor's discretion.

When great difficulty is encountered in conducting the test, it is appropriate to relax the calibration error specification. It is suggested that where difficulty is encountered, the confidence interval be ignored and the $\pm 3$ percent opacity limit be applied only to the mean difference between the expected and actual monitor responses.

(c) For all monitors, the acquisition of a minimum of 15 filter responses using 6-minute averages (as are recorded at many stationary sources) is far too time consuming to be practical. Therefore, it is recommended that the calibration error check responses be determined from the permanent data recorder based on instantaneous measurements or short term averages (e.g., 1-minute averages) where possible. If the permanent data recorder cannot display short term measurements, the calibration error measurements can be obtained from the control unit panel meter or by use of a temporary output device such as a digital volt meter (DVM). To do this, two or more people must perform the audit and communications between the control unit/data recorder location and the transmissometer location are required. This procedure is generally adequate for determining the accuracy and precision of the opacity monitor. An additional check involving only one 6-minute average response for each of the three audit filters is

adequate to determine whether the 6-minute averaging equipment is operating properly.

(d) Care must be exercised when handling the neutral density filters utilized in the calibration error check. Any contamination, such as fingerprints, dust, or moisture, can cause a positive bias in the audit results. If any visible foreign matter is present on the audit filters, the filters should be cleaned using lens paper and lens cleaner. The filters should be rechecked before each use to ensure that no foreign matter has accumulated in the interim. The filters should be recalibrated every six months or any time the auditor suspects that the filter has been damaged.

# SECTION 3

# PERFORMANCE AUDIT PROCEDURES FOR LEAR SIEGLER MEASUREMENT CONTROLS CORPORATION OPACITY MONITORS

## 3.1 LEAR SIEGLER MEASUREMENT CONTROLS - DYNATRON 1100M AND MC2000 OPACITY MONITORS

In 1988, Lear Siegler Measurement Controls Corporation acquired the Model 1100M continuous opacity monitoring system (COMS) from Dynatron, Inc. The COMS is currently identified as the Lear Siegler Measurement Controls Corporation (LSMCC) Dynatron 1100M, and is essentially identical to the 1100M COMS marketed by Dynatron. Lear Siegler also markets the MC2000 COMS. With the exception of the calibration mechanism, the MC2000 COMS is also identical to the Dynatron 1100M. The audit procedures presented in this section apply to the Dynatron 1100M, the LSMCC Dynatron 1100M, and the LSMCC MC2000.

### 3.1.1 COMS Description

The Lear Siegler Measurement Controls Corporation Dynatron 1100M COMS consists of three major components: the transmissometer, the air-purging system, and the control unit. The transmissometer component consists of a transceiver unit mounted on one side of the stack or duct and a retroreflector unit mounted on the opposite side. The 1100M employs an electronically modulated light source to eliminate interference from ambient light. The modulated beam is split into reference and measurement beams, with the reference beam going via fiber optics to the reference photodetector (see Figure 3-1). The measurement beam crosses the stack through the effluent to the retroreflector. The retroreflector returns the measurement beam to the transceiver, where the attenuated light encounters a photodetector identical to the reference detector. Since the COMS output is based on the ratio of the reference and measurement signals, variations in the beam intensity are factored out. The 1100M monitor is calibrated internally by turning off the measurement light source and alternately turning on two calibration light sources. One of the light sources is filtered through a low level neutral density filter (< 10% OP) to produce the internal zero response. The other light source is filtered through an upscale neutral density filter to produce the upscale calibration response.

The air purging system serves a threefold purpose: (1) it provides an air curtain to keep the protective windows clean; (2) it keeps the protective windows from accumulating condensed stack gas moisture; and (3) it minimizes thermal conduction from the stack to the instrument. A standard installation has separate air-purging systems for the transceiver and retroreflector units. Each system has a blower that floods the cavity within the instrument mounting flange with filtered ambient air.

The 1100M control unit converts the transceiver output to single-pass stack exit opacity, controls the daily automatic zero and upscale calibration cycles, and performs several self diagnostic functions (see Figure 3-2). Effluent opacity values are displayed on the digital front panel meter of the unit and can be output as an analog signal to a data recording device. Several

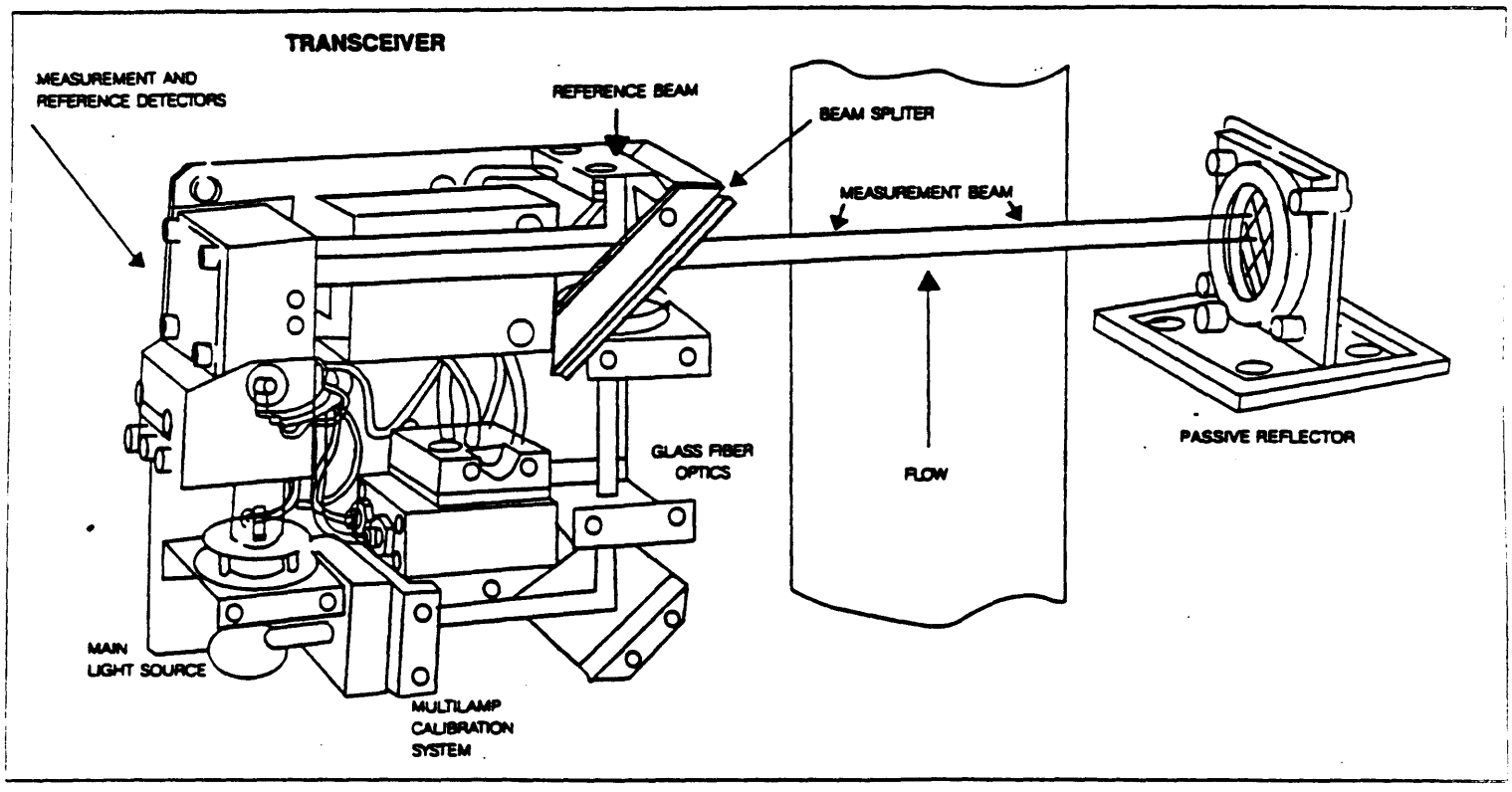


Figure 3-1. Lear Siegler Measurement Controls Corporation Dynatron 1100M Transmissometer

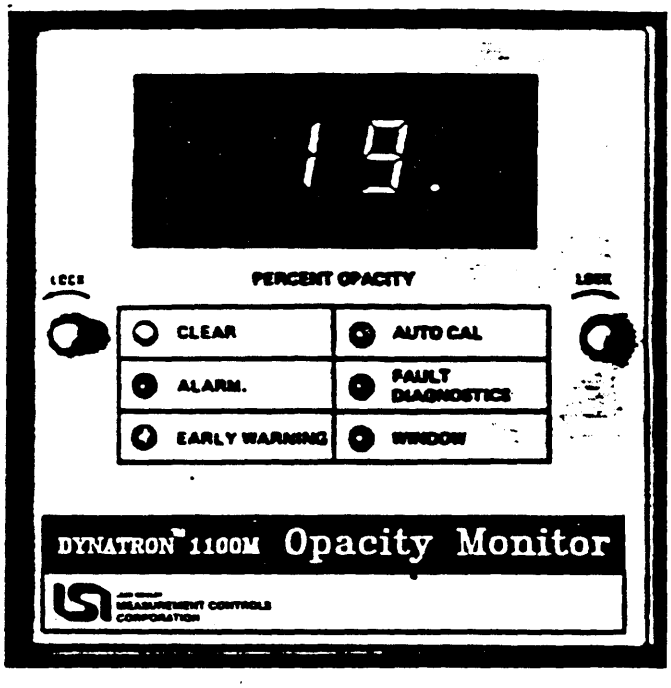


Figure 3-2. Lear Siegler Measurement Controls Corporation Dynatron 1100M Control Unit

indicator lamps on the front panel of the control unit provide information regarding the status of the COMS. Under normal operation, the "CLEAR" lamp will be illuminated. The "ALARM" and "EARLY WARNING" lamps will illuminate if effluent opacity levels exceed a predetermined value set within the control unit. The "AUTO CAL" lamp will illuminate when the COMS has entered the automatic calibration cycle, and the "WINDOW" lamp will illuminate if the dirty window detector in the transceiver housing detects excessive dust accumulation on the transceiver protective optics. The "FAULT DIAGNOSTICS" lamp will illuminate if any one of a number of system faults are detected. Inside the control unit are several switches that can be manipulated to output specific fault information and to initiate a manual zero and upscale calibration routine.

With the exception of the calibration mechanism, the LSMCC MC2000 is essentially identical to the LSMCC 1100M. During the zero calibration check, a servomotor swings a zero mirror into the path of the measurement beam. The zero mirror intercepts the measurement beam and returns it directly to the measurement detector. During the span calibration cycle, a span filter is placed into the measurement beam with the zero mirror in place. Figure 3-3 presents a schematic of the transmissometer.

The 1100M and MC2000 opacity monitors measure the amount of light transmitted through the effluent from the transceiver to the retroreflector and back again. The COMS uses this double-pass transmittance to calculate the optical density of the effluent at the monitor location, or the "path" optical density. In order to provide stack exit opacity data, the path optical density must be corrected to stack exit conditions. The correction factor is calculated as the ratio of the stack exit inside diameter to the measurement path length of the monitor (two times the inside diameter of the stack or duct at the transmissometer location). Dynatron referred to this correction factor as the "M" factor. Lear Siegler has traditionally referred to this factor as the "optical path length ratio" (OPLR), and the Lear Siegler Dynatron 1100M manual refers to this factor as the "stack exit correlation ratio." The terms M factor, OPLR, and stack exit correlation ratio are interchangeable; they all refer to the same number. The term "stack exit correlation ratio" will be used throughout the following audit procedures. The equations below illustrate the relationship between the stack exit correlation ratio, path optical density, and stack exit opacity.

$$SECR = \frac{L_x}{L_t} = \text{Stack Exit Correlation Ratio}$$

where: $L_x$ = stack exit inside diameter (ft)

$L_t$ = measurement path length (ft) = two times the stack inside diameter (or the duct width) at the monitor location

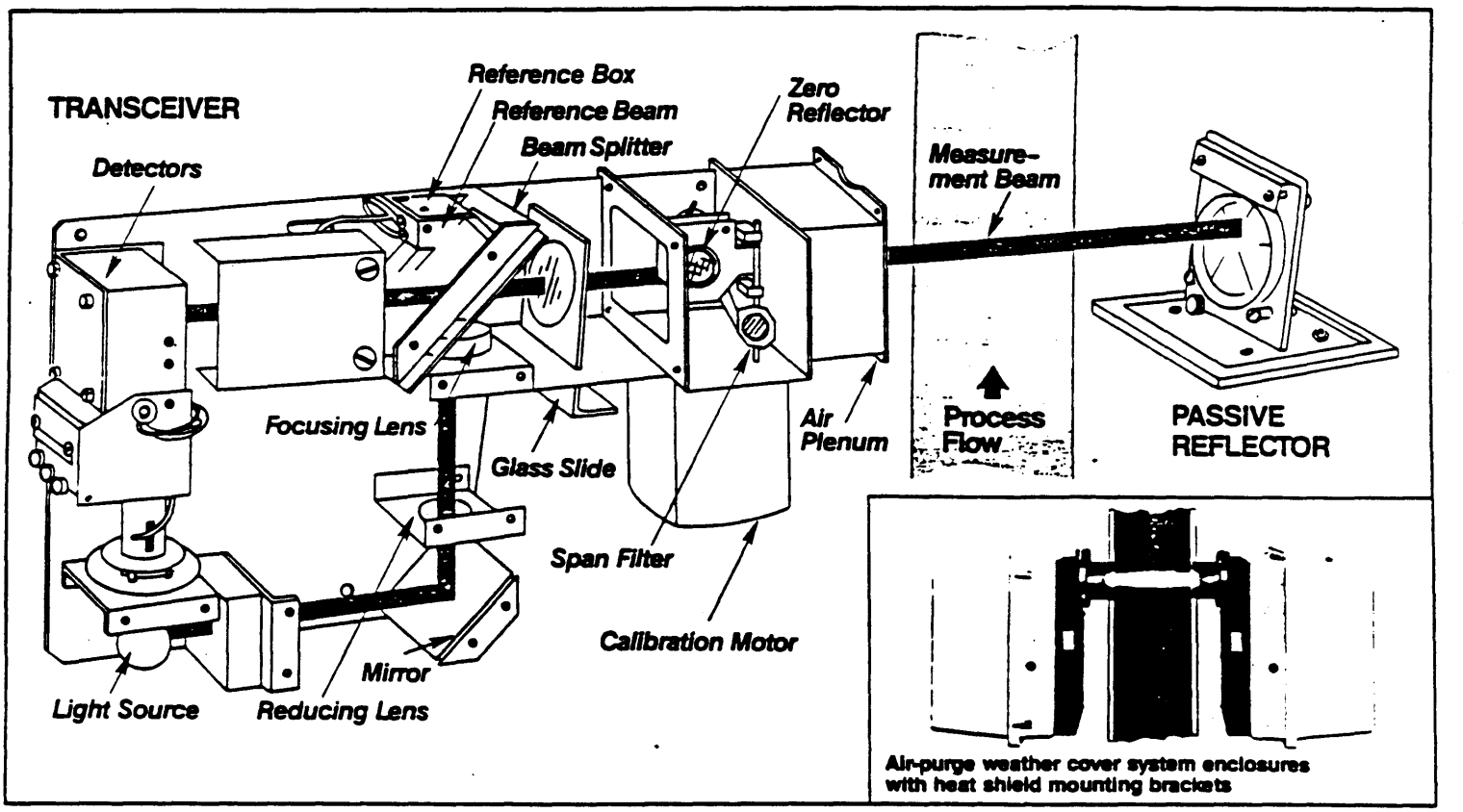


Figure 3-3. Lear Siegler Measurement Controls Corporation MC2000 Transmissometer.

$$OP_x = \left[1 - 10^{-(SECR)(OD)}\right] \times 100$$

where: $OP_x$ = stack exit opacity (%)

OD = transmissometer optical density (path)

### 3.1.2 Performance Audit Procedures

Preliminary Data

1. Obtain the stack exit inside diameter and the transmissometer measurement path length (two times the stack or duct inside diameter or width at the transmissometer location) and record these values in blanks 1 and 2 on the 1100M/MC2000 Performance Audit Data Sheet.

   Note: Effluent handling system dimensions may be acquired from the following sources listed in descending order of reliability: (1) physical measurements, (2) construction drawings, (3) opacity monitor installation or certification documents, and (4) source personnel recollections.

2. Calculate the stack exit correlation ratio (SECR) (divide the value in blank 1 by the value in blank 2). Record the result in blank 3.

3. Record the source-cited SECR in blank 4.

   Note: The SECR is preset by the manufacturer using information supplied by the source. It can be output to the COMS front panel meter by manipulating digital switches inside the control unit. This is not a routine operation and should only be attempted by qualified source personnel. If the SECR is not determined directly, the value recorded in blank 4 should be the value source personnel agree should be set inside the monitor. Typically, this value is cited from monitor installation data, monitor certification data, or COMS service reports.

4. Obtain the reference zero and span calibration values. Record these values in blank 5 and blank 6, respectively.

   Note: The reference zero and span values may not be the same as the values recorded during instrument installation and/or certification. The zero and span values recorded in blank 5 and blank 6 should be the reference values recorded during the most recent clear-path calibration of the COMS.

5. Go to the data acquisition system (DAS) location and inspect the opacity data recorder (strip chart or computer) to ensure proper operation. Annotate the paper with the auditor's name, affiliation, plant, unit, date, and time.

## Fault Lamp Checks

The following section describes the fault lamps found on the front of the COMS control unit. Unless otherwise noted, the audit analysis can continue with illuminated fault lamps, provided that the source has been informed of the fault conditions.

6. Record the status (ON or OFF) of the WINDOW fault lamp in blank 7.

   Note: An illuminated WINDOW fault lamp indicates that the quantity of dust on the transceiver optics has exceeded the limit set within the control unit. If the WINDOW fault lamp is illuminated, the monitor output may be biased high by dust on the transmissometer optics, and the auditor should pay particular attention to cleaning the protective window during subsequent audit steps.

7. Record the status (ON or OFF) of the FAULT DIAGNOSTICS lamp in blank 8.

   Note: An illuminated FAULT DIAGNOSTICS lamp indicates that one or more fault conditions have been detected by the control unit. If the FAULT DIAGNOSTICS lamp is illuminated, specific fault information can be output to the front panel meter in the form of a reason code by turning the digital thumbwheel inside the control unit to position 14. Before continuing the audit, source personnel should determine the cause of the COMS fault. The auditor should discuss the cause and magnitude of the COMS fault with source personnel to determine if the audit can continue.

## Zero/Span Check

8. Unlock the two front panel knobs and pull the control unit forward until the zero/span switch is accessible. (Be careful not to pull the inner unit out too far or it may fall out of the outer chassis.)

9. Initiate the zero calibration mode by moving the zero/span switch to the zero position.

10. Record the zero value displayed on the panel meter in blank 9.

11. Record the zero value displayed on the data recorder in blank 10.

    Note: During the zero calibration check of the 1100M, the measurement lamp is turned off and the zero light source is turned on. During the zero calibration check of the MC2000, a zero mirror is moved into the path of the measurement beam by a servomotor. The zero mechanism of each analyzer is designed to present the transceiver with a simulated clear-path zero. The daily zero check does not test the actual clear-path zero, nor does it provide an indication of cross-stack parameters such as the optical alignment of the transmissometer or drift in the reflectance of the retroreflector. The actual clear-path zero can only be checked during clear-stack or off-stack calibration of the COMS.

12. Initiate the upscale calibration mode by moving the zero/span switch to the span position.

13. Record the span value displayed on the control panel meter in blank 11.

14. Record the span value displayed on the data recorder in blank 12.

    Note: During the span calibration check of the 1100M, the measurement lamp is turned off and the span light source is turned on. During the span calibration check of the MC2000, a servomotor moves a span filter into the path of the measurement beam while the zero mirror is in place.

15. Return the zero/span switch to the center position. Close the control unit and secure the latches.

16. Go to the transmissometer location.

Retroreflector Dust Accumulation Check

17. Record the effluent opacity prior to cleaning the retroreflector protective window in blank 13.

    Note: The acquisition of real-time monitor response data requires that there be communication between the auditor at the transmissometer location and an assistant at the opacity data recorder location.

18. Remove, inspect, clean, and replace the retroreflector protective window.

19. Record the post cleaning effluent opacity in blank 14. Go to the transceiver location.

Transceiver Dust Accumulation Check

20. Record the pre-cleaning effluent opacity in blank 15.

21. Remove, inspect, clean, and replace the transceiver protective window.

22. Record the post-cleaning effluent opacity in blank 16.

Optical Alignment Check

Note: One of two different alignment mechanisms will be encountered when auditing 1100M style transmissometers. The type of alignment mechanism encountered will depend on the age of the unit. Older units will be equipped with an alignment scope mounted on the transceiver unit and will have an opposing target light mounted on the retroreflector. Newer units will be equipped with a through the lens (TTL) alignment mechanism. Step 23 describes the procedures used to check the alignment of older models with the scope alignment mechanism. If the monitor is equipped with a TTL alignment mechanism, skip step 23 and go to step 24.

23. (A) Determine if the monitor is equipped with an alignment scope style alignment mechanism. If it is, follow the procedures listed below. If it is not, go to step 24.

(B) Activate the target light by turning on the "Target Light" toggle switch on top of the lamp power supply.

(C) Look through the alignment sight and observe whether the beam image is centered on the alignment reticle.

(D) Record whether the image is centered (YES or NO) in blank 17.

(E) Draw the orientation of the alignment image in the circle provided on the COMS audit data form.

(F) Turn the "target light" toggle switch off.

(G) Go to Step 25.

24. (A) Determine if the monitor is equipped with a "through the lens (TTL)" alignment mechanism. If it is, follow the procedures listed below. If it is not equipped with an alignment mechanism, omit the alignment analysis and go to Step 25.

(B) Activate the TTL alignment mechanism by turning on the "lamp steady" toggle switch on top of the lamp power supply.

(C) Look through the alignment port on the right hand side of the transceiver and observe whether the beam image is centered on the alignment reticle. The alignment port is located just above the transceiver cable connectors.

(D) Record whether the image is centered (YES or NO) in blank 17.

(E) Draw the orientation of the alignment image in the circle provided on the COMS data form.

(F) Turn the "lamp steady" toggle switch off.

Note: The optical alignment has no effect on the internal checks of the instrument, or on the calibration error test; however, if the optical alignment is not correct, the stack opacity data will be biased high since a portion of the measurement beam will be misdirected before it is returned to the measurement detector.

## Calibration Error Check

The calibration error check is performed using three neutral density filters and an audit device called an audit jig. When installed on the transmissometer, the audit jig intercepts the measurement light beam before it crosses the stack or duct and returns it directly to the measurement detector. Performing the calibration error check on-stack

using the audit jig and filters determines the linearity of the instrument response relative to the current clear-path zero setting. This calibration error check does not determine the accuracy of the instrument clear-path zero or the status of any cross-stack parameters. A true calibration error test is performed by moving the on-stack components to a location with minimal ambient opacity, making sure that the proper path length and alignments are attained, and placing the calibration filters in the measurement beam path.

25. Remove the transceiver dirty window detector on the left forward side of the transceiver. Install the audit jig by inserting it into the dirty window detector port (with the iris opening facing toward the light source) and tightening the thumb screws.

26. Remove the transceiver protective window.

27. Adjust the audit jig iris to produce a 1-2% opacity value on the opacity data recorder. This adjustment simulates the COMS clear-path zero setting.

    Note: Some filter sets intended for incremental calibration checks of Dynatron monitors have an 8-10% "assumed" window opacity value subtracted from the actual filter value. Thus, a filter marked as "20% Op" might have a total true opacity of 26% (8% Op + 20% Op). It is imperative that the auditor know the actual opacity of each filter. In general, it is recommended that both the assumed filter values (based on the sum of filter opacity and assumed window opacity) and the actual filter values be known. This information should be supplied by the firm that certifies the neutral density filters.

28. Install the transceiver protective window and record the measured window opacity value in Blank 18.

29. Remove the transceiver protective window.

30. Record the audit filter serial numbers and opacity values in blanks 19, 20, and 21.

31. Remove the filters from their protective covers, inspect, and, if necessary, clean them.

32. Record the jig zero value from the opacity data recorder.

    Note: The acquisition of monitor responses from the data recorder requires communication between the auditor at the transmissometer location and an assistant at the data recorder location.

33. Insert the low range neutral density filter into the monitor.

34. Wait approximately two minutes or until a clear value has been recorded and displayed on the opacity data recorder.

Note: The audit data should be taken from a data recording/reporting device that presents instantaneous opacity (or opacity data with the shortest available integration period).

35. Record the COMS response to the low range neutral density filter.

36. Remove the low range filter from the monitor and insert the mid range neutral density filter.

37. Wait approximately two minutes and record the COMS response.

38. Remove the mid range filter and insert the high range filter.

39. Wait approximately two minutes and record the COMS response.

40. Remove the high range filter, wait approximately two minutes, and record the jig zero value.

    Note: If the final jig zero value differs from the initial value by more than 1% opacity, the jig zero should be adjusted to agree with the initial value and the three-filter run (i.e., low, mid, and high) should be repeated.

41. Repeat steps 33 through 40 until a total of five opacity readings are obtained for each neutral density filter.

42. If six-minute integrated opacity data are recorded, repeat steps 32 through 40 once more, changing the waiting periods to 13 minutes.

43. Record the six-minute integrated data, if available.

44. When the calibration error check is complete, remove the audit jig, replace the dirty window detector and the protective window, and close the transceiver protective housing.

45. Return to the control unit location.

46. Obtain a copy of the audit data from the data recorder.

47. Transcribe the calibration error data from the data recorder to <u>blanks 22 through 47</u> of the audit data sheet and complete the audit data calculations.

### 3.1.3 Interpretation of Audit Results

This section is designed to help the auditor interpret the Lear Siegler Dynatron 1100M and MC2000 performance audit results. A general discussion of performance audit results is presented in Section 2 of this manual.

#### Stack Exit Correlation Error Check

The path length correction error in blank 48 should be within ±2%. This error exponentially affects the opacity readings, resulting in over- or under-estimation of the stack exit opacity. The most common error in computing the stack exit correlation ratio is the use of the flange-to-flange distance in place of the stack or duct inside diameter at the monitor location. This error will result in under-estimation of the stack exit opacity and can be identified by comparing the monitor optical path length to the flange-to-flange distance; the flange-to-flange distance should be greater by approximately two to four feet.

#### Fault Lamp Analysis

Fault lamps are typically associated with parameters that the monitor manufacturer feels are critical to COMS function and to the collection of valid opacity data. The "FAULT DIAGNOSTICS" lamp on the 1100M and MC2000 control units can be indicative of several fault conditions. Specific fault information can be output to the front panel meter of the control unit in the form of a fault code by turning the digital thumbwheel inside the control unit to position 14. The instrument manual must be consulted to determine the meaning of the fault code. This is typical of the newer digital control units. It allows for increased sophistication of the self-diagnostic circuitry without cluttering the face of the control unit with fault lamps that are rarely used. The 1100M and MC2000 opacity monitors are also equipped with a "WINDOW" fault lamp that becomes illuminated if the quantity of dust on the transceiver optics exceeds a limit set inside the control unit. The COMS is not functioning properly if either of the fault lamps are illuminated.

#### Control Unit Panel Meter Error Check

The accuracy of the control panel meter is important at sources using the meter during monitor adjustment and calibration. The accuracy of the control unit panel meter is determined by comparing the zero and span reference values to the panel meter output recorded during the COMS calibration check. Errors in the control unit panel meter should not affect the opacity data reported by the monitoring system unless the control panel meter is used to adjust the calibration of the COMS. The percent error values associated with the control panel meter are found in blanks 49 and 51. At sources using the panel meter data, the panel meter should be adjusted so that the error is less than 2%. Since the control panel meter error is determined using the internal zero and span values, any change in the specified values for the zero or span will cause an erroneous assessment of the control panel meter errors. Each time the monitor is thoroughly calibrated, the internal zero and span values should be renamed, and the new values should be recorded and used in all subsequent adjustments.

## Internal Zero and Span Check

The 1100M style transmissometer internal zero is typically set to indicate 2-10% opacity. This is because the monitor will not indicate negative opacity values. A zero error (blank 50) greater than 4% opacity is usually due to electronic drift or data recorder electronic/mechanical offset. For the MC2000, dust accumulation on the optical surfaces may also be a source of zero error. The condition should be accompanied by an illuminated window fault lamp. Instrument span error (blank 52) may be caused by the same problems that cause zero errors and may be identified in a similar fashion.

If the zero and span errors are due to a data recorder offset, both errors will be in the same direction and will be of the same magnitude.

## Transmissometer Dust Accumulation Check

The results of the dust accumulation check (blank 55) should not exceed 4%. A dust accumulation value of more than 4% opacity indicates that the airflow of the purge system and/or the cleaning frequency of the optical surfaces are inadequate. When determining the optical surface dust accumulation, the auditor should note whether the effluent opacity is reasonably stable (within ±2% opacity) before and after cleaning the optical surfaces. If the effluent opacity is fluctuating by more than ±2%, the dust accumulation analysis should be omitted.

## Optical Alignment Check

When the transceiver and retroreflector are misaligned, a portion of the measurement beam that should be returned to the measurement detector is misdirected, resulting in a positive bias in the data reported by the COMS. One of the most common causes of misalignment is vibration which may cause the on-stack components to shift slightly on the instrument mounting flanges. Another common cause of misalignment is thermal expansion and contraction of the structure on which the transmissometer is mounted. If the COMS is being audited while the unit is off-line (cold stack), the results of the alignment analysis may not be representative of the alignment of the instrument when the stack or duct is at normal operating temperature.

## Calibration Error Check

Calibration error results (blanks 65, 66, and 67) in excess of ±3% are indicative of a non-linear or miscalibrated instrument. However, the absolute calibration accuracy of the monitor can be determined only when the instrument clear-path zero setting is known. If the zero and span data are out-of-specification, the calibration error data will often be biased in the same direction as the zero and span errors. Even if the zero and span errors indicate that the COMS is calibrated properly, the monitor may still be inaccurate due to error in the clear-path zero adjustment. The optimum calibration procedure involves using neutral density filters during a clear-stack or off-stack calibration. This procedure would establish the

absolute calibration accuracy and linearity of the COMS. If this procedures is impractical, and it is reasonable to assume that the clear-path zero is set correctly, the monitor's calibration can be set on-stack using either the neutral density filters or the internal zero and span values.

## 3.2 LEAR SIEGLER MEASUREMENT CONTROLS CORPORATION MODEL RM-41 TRANSMISSOMETER AND MODEL 611 CONTROL UNIT

The RM-41 was Lear Siegler's primary opacity monitor prior to the acquisition of the Dynatron 1100M. The RM-41 opacity monitors were installed when Lear Siegler Measurement Controls Corporation was called Lear Siegler, Inc. (LSI), and are generally identified as the LSI RM-41.

### 3.2.1 COMS Description

The RM-41 continuous opacity monitoring system (COMS) consists of three major components: the transmissometer, the air-purging and shutter system, and the Model 611 control unit. The transmissometer component consists of a transceiver unit mounted on one side of a stack or duct and a retroreflector unit mounted on the opposite side. The transceiver unit contains a light source, a photodiode detector, and the optical, mechanical, and electronic components used in monitor operation and calibration. The output signal from the transceiver (double-pass, uncorrected transmittance) is processed into a signal that represents single-pass stack exit opacity by the COMS control unit.

Figure 3-4 illustrates the general arrangement of the RM-41 transceiver and retroreflector units on the stack. The RM-41 uses a modulated, dual-beam measurement technique. Light emitted by the light source in the transceiver head is modulated by a perforated rotating disc to make the instrument insensitive to ambient light. The light is then split into reference and measurement beams which impinge on a single photodiode detector in a time-shared fashion. The reference beam travels directly to the detector to produce the reference signal. The measurement beam crosses the stack (through the effluent) to the retroreflector, which returns the beam to the detector producing the measurement signal. To compensate for variations in component stability (lamp intensity, electronic stability, etc.), the reference and measurement signals are processed by an automatic gain control (AGC) circuit that drives the reference signal toward a constant value and stabilizes instrument output.

The air purging system serves a threefold purpose: (1) it provides an air window to keep exposed optical surfaces clean; (2) it protects the optical surfaces from condensation of stack gas moisture; and (3) it minimizes thermal conduction from the stack to the instrument. A standard installation has separate air-purging systems for the transceiver and retroreflector units. Each system has a blower that floods the cavity within the instrument mounting flange with filtered ambient air.

In the event of a partial or a complete failure of the purge air system, shutters (offered as an option) automatically provide protection for the exposed optical surfaces of the transceiver and retroreflector. Whenever the purge airflow decreases below a predetermined rate (due to blower motor failure, a clogged filter, a broken hose, or stack power failure), the servo mechanism holding the shutter open is deactivated by an airflow sensor installed in the hose connecting the air-purge blower to the instrument mounting flange. Under stack power failure conditions, the shutters are reset automatically upon restoration of power to the blowers. However, each solenoid may have to be reset manually under high negative or high positive stack pressure conditions.

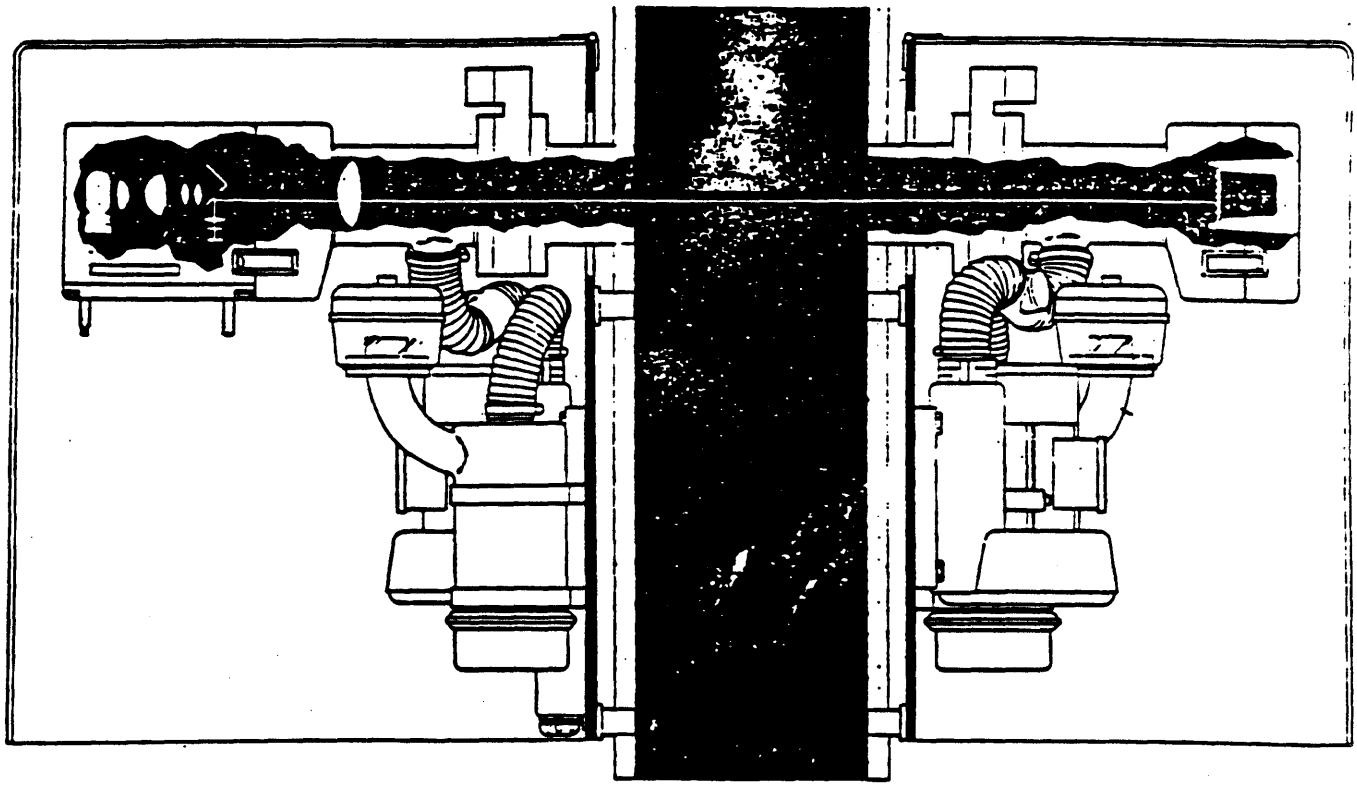

Figure 3-4. Lear Siegler Measurement Controls Corporation RM-41 Transmissometer.

The control unit (Figure 3-5) converts the transceiver output to stack exit opacity, controls the daily automatic calibration cycles, and performs several self diagnostic functions. Many control units contain an optional integrator circuit card which compiles the opacity data into discrete data averages. The integration period (typically six minutes) is set by manipulating a rotary switch on the integrator circuit card. This function will probably not be used at facilities employing a computer to reduce and record opacity data since the computer can perform the integration.

The opacity monitor measures the amount of light transmitted through the effluent from the transceiver to the retroreflector and back again. The control unit uses this double-pass transmittance to calculate the optical density of the effluent at the monitor location, or the "path" optical density. In order to provide stack exit opacity data, the path optical density must be corrected to stack exit conditions. The correction factor is calculated as the ratio of the stack exit inside diameter to the measurement path length (two times the inside diameter of the stack or duct at the transmissometer location). This ratio is called the "optical path length ratio (OPLR)" when used in reference to the RM-41. This value is set within the control unit circuitry, and the correction is automatically applied to the path optical density measurements. The following equations illustrate the relationship between the OPLR, path optical density, and stack exit opacity.

$$OPLR = \frac{L_x}{L_t} = \text{optical path length ratio}$$

$L_x$ = stack exit inside diameter (ft)

$L_T$ = measurement path length (ft) = two times the effluent depth at the transmissometer location

$$OP_x = \left[1 - 10^{-(OPLR)(OD)}\right] \times 100$$

where: $OP_x$ = stack exit opacity (%)

OD = transmissometer optical density (path)

### 3.2.2 Performance Audit Procedures

Preliminary Data

1. Obtain the stack exit inside diameter and transmissometer measurement path length (two times the stack or duct inside diameter or width at the transmissometer location) and record these values in blanks 1 and 2 of the Lear Siegler RM-41 Performance Audit Data Sheet.

   Note: Effluent handling system dimensions may be acquired from the following sources listed in descending order of reliability:

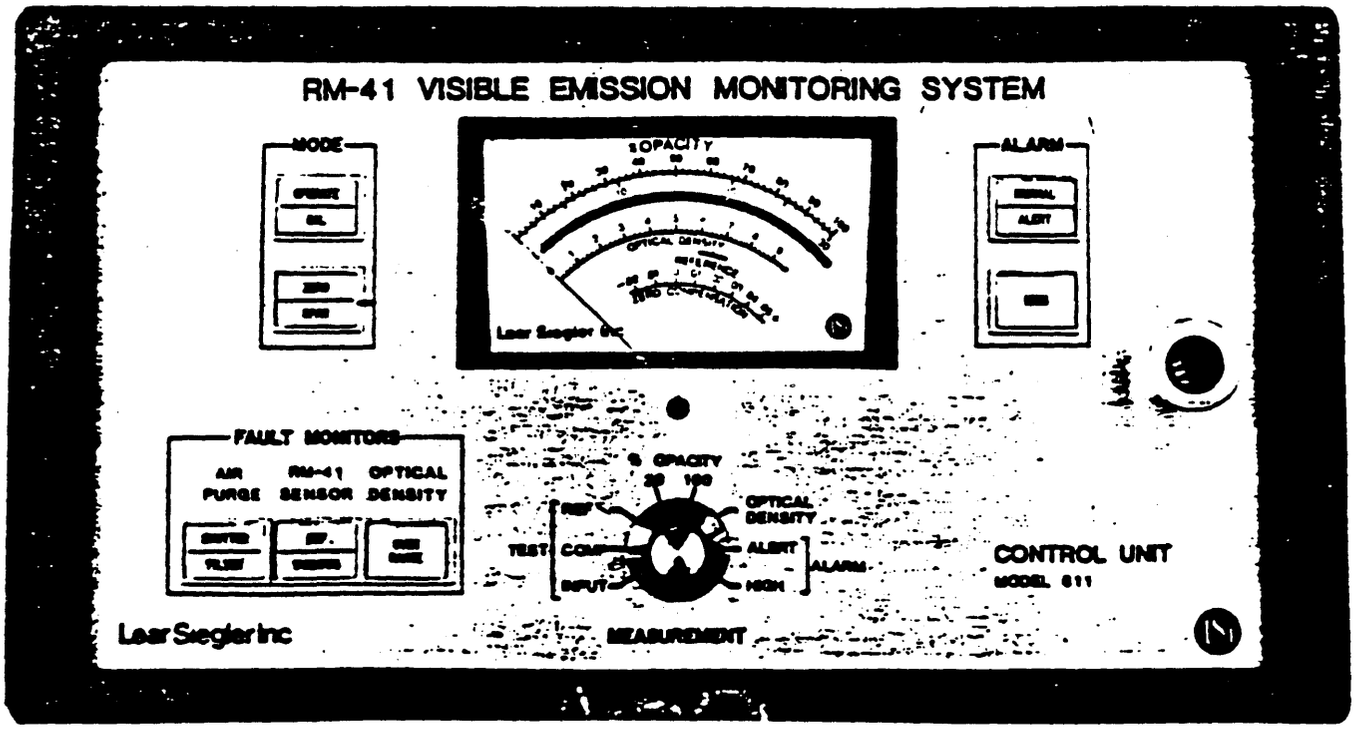


Figure 3-5. Lear Siegler Measurement Controls Corporation RM-41 Control Unit (Model 611).

(1) physical measurements, (2) construction drawings, (3) opacity monitor installation/certification documents, and (4) source personnel recollections.

2. Calculate the OPLR (divide the value in blank 1 by the value in blank 2). Record the result in blank 3.

3. Record the source-cited OPLR value in blank 4.

   Note: The OPLR is preset by the manufacturer using information supplied by the source. The value recorded in blank 4 should be the value that source personnel agree should be set inside the monitor. Typically, this value is cited from monitor installation data, monitor certification data, or COMS service reports.

4. Obtain the reference zero and span calibration values. Record these values in blank 5 and blank 6, respectively.

   Note: These values are set during monitor calibration and may not be equal to the values recorded at installation and/or certification. Records of the zero and span values resulting from the most recent monitor calibration should be kept by source personnel. If source personnel cannot site an updated span reference value, the factory assigned span value should be entered in blank 6. The factory assigned span filter value is calculated using data collected during the audit and the following formula:

$$\text{Span value} = \left\{1 - \left[10^{-(\text{OPLR})(\text{O.D.})}\right]\right\} \times 100$$

where:

Span value = the factory assigned span filter value in percent opacity

OPLR = the optical path length ratio from blank 14a

O.D. = the span filter value in optical density read from the serial number data plate on the bottom of the transceiver unit (blank 29).

5. Inspect the opacity data recorder (strip chart or computer) to ensure proper operation. Annotate the data record with the auditor's name, affiliation plant, unit, date, and time.

Fault Lamp Checks

The following steps describe the fault lamp analysis for the Lear Siegler Model 611 control unit. Unless otherwise noted, the audit can continue with illuminated fault lamps, provided that the source has been informed of the fault conditions.

6. Record the status (ON or OFF) of the FILTER fault lamp in blank 7.

   Note: An illuminated FILTER fault lamp indicates a reduction or loss of purge air flow to the transceiver and/or retroreflector. This fault does not preclude the completion of the audit; however, source personnel should be notified of this condition immediately. Loss of purge air can damage the on-stack COMS components.

7. Record the status (ON or OFF) of the SHUTTER fault lamp in blank 8.

   Note: An illuminated SHUTTER fault lamp indicates that one or both of the protective shutters has closed, blocking the optical path and preventing measurement of effluent opacity. The performance audit can continue, however this fault condition precludes performance of cross-stack audit analyses relating to the retroreflector and transceiver window checks.

8. Record the status (ON or OFF) of the REF fault lamp in blank 9.

   Note: An illuminated REF fault lamp indicates that the reference signal is out-of-specification. This condition may be due to a fault in the automatic gain control (AGC) circuit or to a fault in the associated transceiver electronics (e.g., low line voltage, burned-out or improperly installed lamp, etc.).

9. Record the status (ON or OFF) of the WINDOW fault lamp in blank 10.

   Note: An illuminated WINDOW fault lamp indicates that the zero compensation exceeds the maximum preset limit of 4% opacity. The zero compensation circuit electronically corrects the monitor's opacity responses for dust accumulation on the transceiver optics (both the primary lens and the zero mirror). Exceeding the zero compensation limit may bias the opacity measurement data as well as the zero and span calibration values.

10. Record the status (ON or OFF) of the OVER RANGE fault lamp in blank 11.

    Note: An illuminated OVER RANGE fault lamp indicates that the optical density of the effluent exceeds the range selected on the optical density circuit board. This condition will affect the recorded opacity data.

Control Unit Adjustments and Checks

Note: The following checks should be performed only by source personnel or by a qualified auditor with the approval of source personnel.

11. Open the control unit and remove the main power fuse.

12. Locate and pull the CAL TIMER circuit board inside the control unit (see Figure 3-6). Record the position of the S1 switch in blank 12.

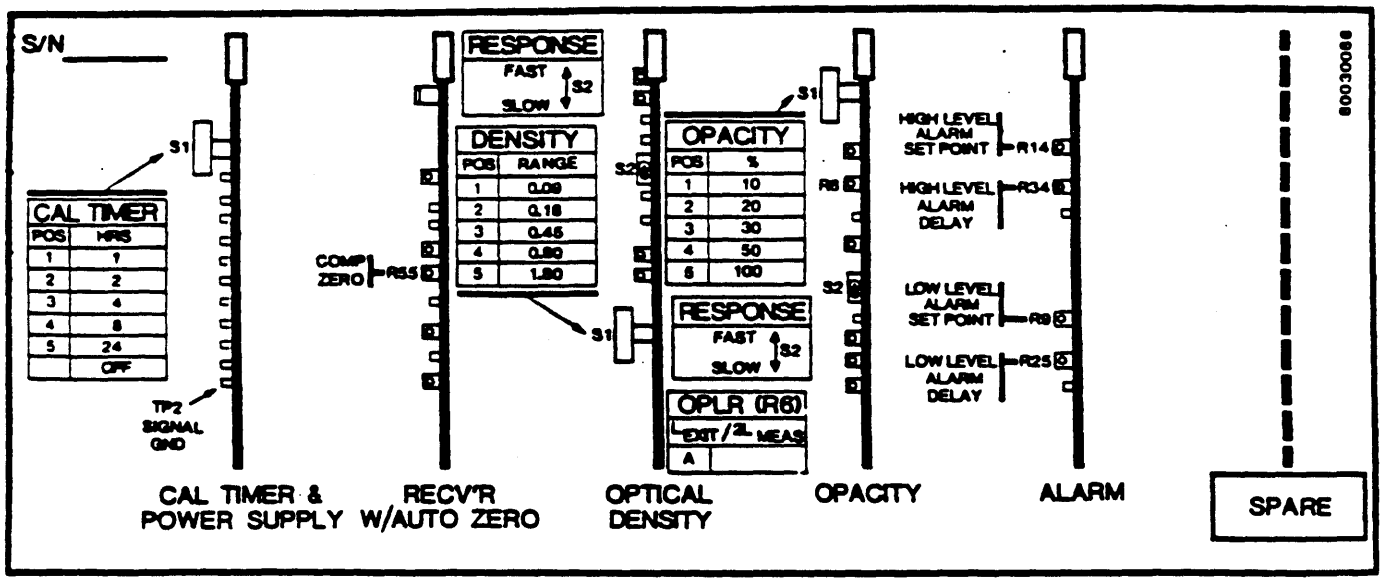


Figure 3-6. Lear Siegler Measurement Controls Corporation RM-41 Control Unit Circuit Board Arrangement.

13. Rotate the S1 switch to the sixth position, if necessary, and reinstall the board.

    Note: This adjustment deactivates the automatic calibration timer to prevent the initiation of a calibration cycle during the audit. Damage to the zero mirror mechanism may result if the mechanism is activated during the calibration error portion of the audit.

14. Locate and pull the OPTICAL DENSITY circuit board (see Figure 3-6). Record the position of the S1 switch in blank 13.

15. Rotate the S1 switch to the fifth position, if necessary, and reinstall the board.

    Note: This adjustment expands the optical density measurement range to its maximum to ensure that upscale audit filters can be read during the calibration error test.

16. Locate and pull the OPACITY board (see Figure 3-6). Record the position of the S1 switch in blank 14.

17. Rotate the S1 switch to the fifth position, if necessary, and reinstall the board.

    Note: This adjustment sets the output signal from the control unit to the data recorder at the maximum value of 0 to 100% opacity.

18. Optional OPLR check: Measure the resistance across the R6 Potentiometer in OHMS. Divide this value by 400 and enter the result in blank 14a. If the resistance of R6 is not measured, enter the value from blank 4 in blank 14a.

19. Reinstall the opacity board. Reinstall the power fuse and close the control unit panel.

20. Record the original position of the control unit MEASUREMENT switch in blank 15.

Reference Signal Check

21. Turn the MEASUREMENT switch to the REF position.

22. Record the milliamp current value displayed on the 0-30 scale of the control unit panel meter in blank 16.

    Note: The reference signal should be within the green area marked "Reference." A reference value outside the green band may indicate a malfunction of the AGC circuit or the measurement lamp.

23. Turn the Measurement switch to the "100% OP" position.

Zero Check

24. Press the Operate button on the control panel to initiate the zero mode.
CAL

Note: The green OPERATE light should go out when the zero mirror has moved into the optical path. The yellow CAL light and the green ZERO light should become illuminated.

25. Record the zero value displayed on the panel meter in blank 17.

26. Record the zero value displayed on the data recorder in blank 18.

Note: During the zero calibration check, the zero mirror is moved into the path of the measurement beam by a servomotor. The zero mechanism is designed to present the transceiver with a simulated clear-path condition. The daily zero check does not test the actual clear-path zero, nor does it provide a check of cross-stack parameters such as the optical alignment of the transmissometer or drift in the reflectance of the retroreflector. The actual clear-path zero can only be checked during clear-stack or off-stack calibration of the COMS. In addition to simulating the instrument clear-path zero, the zero mechanism allows the amount of dust on the transceiver optics (primary lens and zero mirror) to be quantified by the zero compensation circuitry.

Zero Compensation Check

27. Turn the MEASUREMENT switch to the COMP position.

28. Record the zero compensation value (in optical density) displayed on the bottom scale of the control panel meter in blank 19.

Note: The transceiver lamp output is split into two beams: (1) the reference beam which produces the reference signal within the monitor, and (2) the measurement beam which passes through the effluent. When the zero mirror is in the calibrate position, the measurement beam passes through the transceiver optics, strikes the zero mirror, and is reflected directly back to the measurement detector. The signal produced by the measurement beam is compared with the signal produced by the reference beam; the difference between the two signals is assumed to be due to the attenuation of the measurement beam by dust on the transceiver optics and zero mirror. The monitor automatically compensates for the difference. The zero compensation value displayed on the panel meter represents this difference in terms of optical density (OD).

29. Turn the MEASUREMENT switch to the 100% OPACITY position.

Span Check

30. Press the ZERO button to initiate the span mode.
SPAN

31. Record the span value displayed on the control unit panel meter in blank 20 (0-100% Op scale).

32. Record the span value displayed on the data recorder in blank 21.

    Note: During the span calibration check, a servomotor moves a span filter into the path of the measurement beam while the zero mirror is in place. The span mechanism is designed to provide an indication of the upscale accuracy of the COMS relative to the simulated clear-path zero.

33. Press the OPERATE/CAL button to return the monitor to the stack opacity measurement mode. Go to the transmissometer location.

    Note: The OPERATE AND CAL lamps will light to indicate movement of the zero mirror. The OPERATE/CAL button should not be pressed when both the OPERATE and CAL lamps are illuminated because the zero mirror may stop before it has cleared the path of the measurement beam.

Retroreflector Dust Accumulation Check

34. Record the effluent opacity prior to cleaning the retroreflector optics in blank 22.

35. Open the retroreflector housing, inspect and clean the retroreflector optics, and close the housing.

36. Record the post cleaning effluent opacity in blank 23. Go to the transceiver location.

Transceiver Dust Accumulation Check

37. Record the pre-cleaning effluent opacity in blank 24.

38. Open the transceiver, inspect and clean the optics (primary lens and zero mirror), and close the transceiver head.

39. Record the post-cleaning effluent opacity in blank 25.

    Note: After the transmissometer optics have been cleaned. the zero compensation must be reset so that it will not continue to compensate for dust that is no longer present. This operation must be conducted at the control unit and may involve the assistance of source personnel.

40. Press the OPERATE button on the control unit.
    CAL

41. Turn the MEASUREMENT switch to the COMP position.

42. Record the post cleaning zero compensation value in blank 26.

43. Press the OPERATE button.
CAL

44. Turn the MEASUREMENT switch to the 100% opacity position.

Automatic Gain Control Check

45. Determine whether the green AGC LED (Figure 3-6) on the transceiver is illuminated. Enter the AGC LED status (ON or OFF) in blank 27.

Optical Alignment Check

46. Remove the protective cover on the transceiver mode switch located on the bottom right-hand side of the transceiver (see Figure 3-7).

47. Turn the switch one position counter-clockwise until ALIGN can be seen through the switch window.

48. Determine the alignment of the transmissometer by looking through the viewing port (Figure 3-7) and observing whether the beam image is in the circular target.

49. Record whether the image is centered inside the circular target (YES or NO) in blank 28.

50. Draw the orientation of the beam image in the circle provided on the data form.

    Note: The optical alignment has no effect on the internal checks of the instrument or on the calibration error test; however, if the optical alignment is not correct, the stack opacity data will be biased high since a portion of the measurement beam will be misdirected before it is returned to the measurement detector.

51. Turn the transceiver mode switch clockwise until OPERATE appears in the window. Replace the mode switch protective cover.

Span Filter Check

52. Record the instrument span filter optical density value in blank 29. Record the output current value in blank 30. These values are written on the serial number dataplate on the underside of the transceiver.

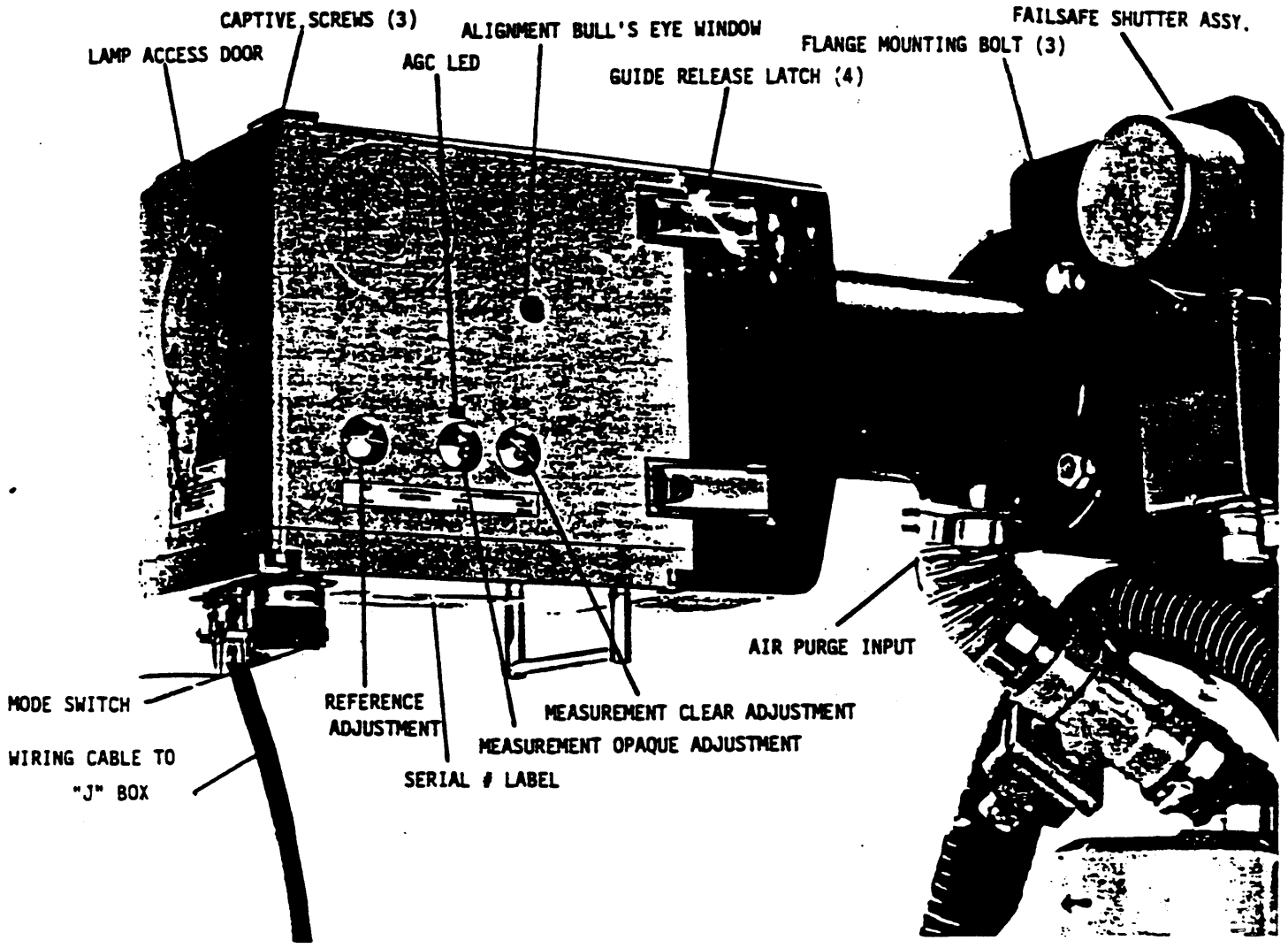


Figure 3-7. Lear Siegler Measurement Controls Corporation RM-41 Transceiver.

Calibration Error Check

The calibration error check is performed using three neutral density filters and an audit device called an audit jig. When installed on the transmissometer, the audit jig intercepts the measurement light beam and returns it directly to the measurement detector. Performing the calibration error check on-stack using the audit jig and filters determines the linearity of the instrument response relative to the current clear-path zero setting. This calibration error check does not determine the accuracy of the actual instrument clear-path zero or the status of any cross-stack parameters. A true calibration error test is performed by moving the on-stack components to a location with minimal ambient opacity, making sure that the proper path length and alignments are attained, and then placing the calibration filters in the measurement beam path.

53. Install the audit jig by sliding it onto the transceiver projection lens barrel.

    Note: The audit device will not slide on until it is flush with the lens barrel. Care should be taken not to push it against the zero mirror or to pinch the wires serving the zero mirror motor.

54. Adjust the audit jig iris to produce a 19-20 mA output current on the junction box meter (Figure 3-8). This adjustment simulates the COMS clear-path zero setting.

    Note: The junction box meter is located in a gray box mounted near the transceiver unit. The meter allows the auditor to get the jig zero value near the zero value on the data recorder. The final jig zero adjustments should be based on readings from the data recorder. The jig zero does not have to be exactly 0% opacity since the audit filter correction equations can account for an offset in the jig zero. A jig zero value in the range of 0-2% opacity is acceptable.

55. Record the audit filter serial numbers and opacity values in blanks 31, 32, and 33.

56. Remove the filters from their protective covers; inspect, and if necessary, clean them.

57. Record the jig zero value from the data recorder.

    Note: The acquisition of monitor responses from the data recorder requires communication between the auditor at the transmissometer location and an assistant at the data recorder location.

58. Insert the low range neutral density filter into the audit jig.

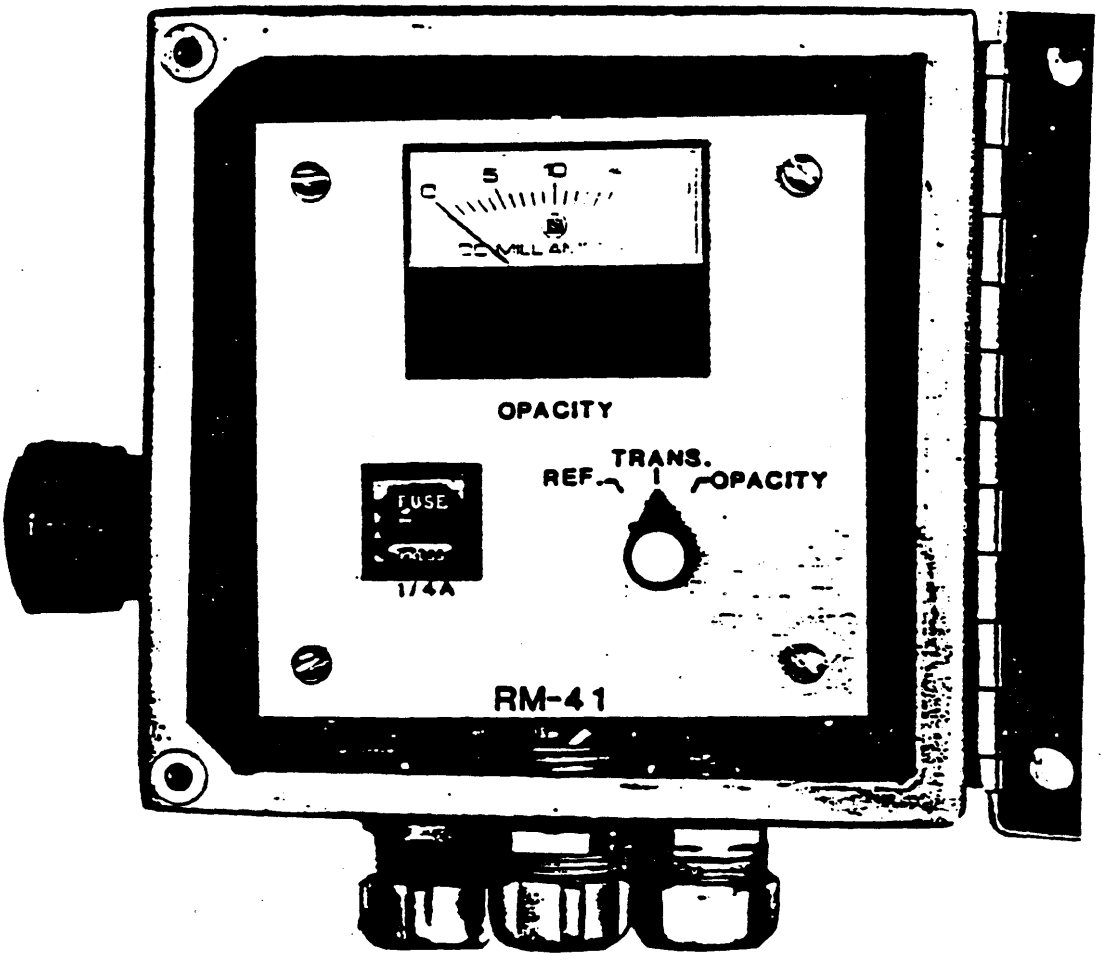


Figure 3-8. Lear Siegler Measurement Controls Corporation RM-41 Junction Box (J-Box).

59. Wait approximately two minutes or until a stable value has been recorded and displayed on the data recorder.

    Note: The audit data should be taken from a data recording/reporting device that presents instantaneous opacity (or opacity data with the shortest available integration period).

60. Record the COMS response to the low range neutral density filter.

61. Remove the low range filter from the audit jig and insert the mid range neutral density filter.

62. Wait approximately two minutes and record the COMS response to the mid range neutral density filter.

63. Remove the mid range filter from the audit jig and insert the high range filter.

64. Wait approximately two minutes and record the COMS response to the high range neutral density filter.

65. Remove the high range filter, wait approximately two minutes, and record the jig zero value from the opacity data recorder.

    Note: If the final jig zero value differs from the initial value by more than 1% opacity, the jig zero should be adjusted to agree with the initial value and the three-filter run (i.e., low, mid, and high) should be repeated.

66. Repeat steps 58 through 65 until a total of five opacity readings are obtained for each neutral density filter.

67. If six-minute integrated opacity data are recorded, repeat steps 57 through 65 once more, changing the waiting periods to 13 minutes.

68. Record the six-minute integrated data.

    Note: In order to acquire valid six-minute integrated opacity data, each filter must remain in the jig for at least two consecutive six-minute periods. The first period will be invalid because it was in progress when the filter was inserted. A waiting period of 13 minutes is recommended.

69. When the calibration error check is complete, remove the audit jig, close the protective cover on the junction box, and close the transceiver head.

Zero Compensation Check

70. Return to the control unit location and initiate the monitor zero mode by pressing the OPERATE/CAL button.

71. Turn the MEASUREMENT switch to the COMP position.

72. Record in blank 34 the zero compensation value (in optical density) from the bottom scale (-0.02 to +0.05 O.D.) of the control unit panel meter.

73. Return the monitor to the operate mode by pressing the OPERATE/CAL button.

Control Unit Adjustment Reset

74. Return the CAL TIMER, OPTICAL DENSITY and OPACITY board S1 switches, and the MEASUREMENT switch to their original positions as recorded in blanks 12, 13, 14, and 15.

75. Obtain a copy of the audit data from the data recorder.

76. Transcribe the calibration error responses from the data record into blanks 35 through 60 and complete the audit data calculations.

### 3.2.3 Interpretation Of Audit Results

This section is designed to help the auditor interpret the Lear Siegler RM-41 performance audit results. A general discussion of performance audit results is presented in Section 2 of this manual.

Stack Exit Correlation Error

The path length correction errors in blanks 61 and 62 should be within ±2%. This error exponentially affects the opacity readings, resulting in over- or underestimation of the stack exit opacity. The most common error in computing the OPLR is the use of the flange-to-flange distance in place of the stack or duct inside diameter at the monitor location. This error will result in under-estimation of the stack exit opacity and can be identified by comparing the monitor optical path length to the flange-to-flange distance. The flange-to- flange distance should be greater by approximately two to four feet.

Fault Lamp Analysis

Fault lamps are typically associated with parameters that the monitor manufacturer feels are critical to COMS function and to the collection of valid opacity data. The parameters associated with each of the Model 611 control unit fault lamps is discussed in the audit procedures. With the exception of lamps that warn of elevated opacity levels (alarm or warning lamps), an illuminated fault lamp indicates that the COMS is not functioning properly.

Control Panel Meter Error (Optional)

The accuracy of the control panel meter is important at sources using the meter during monitor adjustment and calibration. The accuracy of the control unit panel meter is determined by comparing the zero and span reference values to the panel meter output recorded during the COMS calibration check. Errors in the control panel meter should not affect the opacity data reported by the

monitoring system unless the control panel meter is used to adjust the calibration of the COMS. The percent error values associated with the control panel meter are found in blanks 64 and 66. At sources using the panel meter data, the panel meter should be adjusted so that the error is less than 2%. Since the control panel meter error is calculated using the span filter, any change in the specified values for the span filter will cause an erroneous assessment of the control panel meter errors. The span filter value may change due to aging, replacement, etc. Each time the monitor is thoroughly calibrated, the internal span filter should be renamed and new specified values for the optical density and output current should be recorded and used in all subsequent adjustments.

Reference Signal Error Check

The reference signal is an indicator of the status of the automatic gain control circuit, the measurement lamp, the photodiode detector, and/or the preamplifier. A reference signal error (blank 63) greater than 10% is indicative of a malfunction in one of these component systems. Since the reference signal is critical to maintaining the accuracy of the transmissometer opacity measurements, source personnel should be notified of excessive errors so that corrective action can be taken.

Internal Zero and Span Check

The RM-41 internal zero should be set to indicate 0% opacity. A zero error (blank 65) greater than 4% opacity is usually due to excessive dust accumulation on the optical surfaces, electronic drift, or data recorder electronic/mechanical offset. Excessive dust on the optical surfaces sufficient to cause a significant zero error will be accompanied by an elevated zero compensation reading and an illuminated WINDOW fault lamp. A malfunction of the transceiver electronics resulting in a zero error should be accompanied by a reference signal error. Instrument span error (blank 67) may be caused by the same problems that cause zero errors and may be identified in a similar fashion. A span error may also be caused by an inaccurately named span filter value.

If the zero and span errors are due to a data recorder offset, both errors will be in the same direction and will be of the same magnitude.

Zero Compensation Check

The amount of zero compensation needed to compensate for dust on the transceiver optics should not exceed 4% opacity, approximately equivalent to an optical density of 0.018. The zero compensation values recorded in blanks 68, 69, and 70 should not exceed ±0.018 OD. Post-cleaning values in excess of ±0.018 OD indicate that excessive dust remains on the monitor optics or that a malfunction has occurred in the zero compensation circuitry.

A residual positive zero compensation after a thorough cleaning of transmissometer optics is normally the result of an incorrect zero compensation circuit adjustment. If the zero compensation goes negative after the transceiver optical surfaces are cleaned, it is probable that the zero compensation circuit was last adjusted at a time when the optical surfaces were not clean. Often, when this situation occurs (adjustments during dirty window

conditions), the internal zero will also have been adjusted to read 0% opacity. This will offset the zero in the negative direction. Under these conditions, the internal zero and the zero compensation circuit should be readjusted after the optics are cleaned.

Optical Alignment Check

When the transceiver and retroreflector are misaligned, a portion of the measurement beam that should be returned to the measurement detector is misdirected, resulting in a positive bias in the data reported by the COMS. One of the most common causes of misalignment is vibration which may cause the on-stack components to shift slightly on the instrument mounting flanges. Another common cause of misalignment is thermal expansion and contraction of the structure on which the transmissometer is mounted. If the COMS is being audited while the unit is off-line (cold stack), the results of the alignment analysis may not be representative of the alignment of the instrument when the stack or duct is at normal operating temperature.

Transmissometer Dust Accumulation Check

The results of the dust accumulation check (blank 73) should not exceed 4% opacity. A dust accumulation value of more than 4% opacity indicates that the airflow of the purge system and/or the cleaning frequency of the optical surfaces are inadequate. When determining the optical surface dust accumulation, the auditor should note whether the effluent opacity is reasonably stable (within ±2% opacity) before and after cleaning the optical surfaces. If the effluent opacity is fluctuating by more than ±2%, the dust accumulation analysis should be omitted.

Calibration Error Check

Calibration error results (blanks 83, 84, and 85) in excess of ±3% are indicative of a non-linear or miscalibrated instrument. However, the absolute calibration accuracy of the monitor can be determined only when the instrument clear-path zero setting is known. If the zero and span data are out-of-specification, the calibration error data will often be biased in the same direction as the zero and span errors. Even if the zero and span data indicate that the COMS is calibrated properly, the monitor may still be inaccurate due to error in the clear-path zero adjustment. The optimum calibration procedure involves using neutral density filters during a clear-stack or off-stack COMS calibration. This procedure would establish both the absolute calibration accuracy and linearity of the COMS. If this procedure is impractical and it is reasonable to assume that the clear-path zero is set correctly, the monitor's calibration can be set on-stack using either the neutral density filters or the internal zero and span values.

## 3.3 LEAR SIEGLER MEASUREMENT CONTROLS CORPORATION MODEL RM-4 OPACITY COMS

The RM-4 was Lear Siegler's primary opacity monitor before being updated to the RM-41. The RM-4 opacity monitors were installed when Lear Siegler Measurement Controls Corporation was called Lear Siegler, Inc. (LSI) and are generally identified as the LSI RM-4.

### 3.3.1 COMS Description

The RM-4 continuous opacity monitoring system (COMS) consists of three major components: the transmissometer, the air-purging and shutter system, and the remote control and data acquisition system. The transmissometer consists of a transceiver unit mounted on one side of the stack or duct and a retroreflector unit mounted on the opposite side. The transceiver unit contains a light source, a photodiode detector, and the optical, mechanical, and electronic components used in monitor operation and calibration. The output signal from the transceiver (single-pass, optical density) is transmitted to the control unit.

Figure 3-9 illustrates the general arrangement of the transceiver and retroreflector units on the stack. The RM-4 uses a modulated, dual beam measurement technique. Light emitted by the light source in the transceiver head is split into reference and measurement beams before being modulated by a perforated rotating disk. Modulation of the light beams makes the instrument insensitive to ambient light. The reference beam travels directly to the photodiode detector to produce the reference signal. The measurement beam travels across the stack (through the effluent) to the retroreflector which returns the beam to the detector to produce the measurement signal. To compensate for component instability (lamp intensity, electronic instability, etc.), the reference and measurement beams are processed by an automatic gain control (AGC) circuit that drives the reference signal toward a constant value and stabilizes instrument output.

The air purging system serves a threefold purpose: (1) it provides an air window to keep exposed optical surfaces clean; (2) it protects the optical surfaces from condensation of stack gas moisture; and (3) it minimizes thermal conduction from the stack to the instrument. A standard installation has separate air-purging systems for the transceiver and retroreflector units. Each system has a blower that floods the cavity within the instrument mounting flange with filtered ambient air.

In the event of partial or complete failure of the purge air system, shutters (installed as an option) automatically provide protection for the exposed optical surfaces of the transceiver and retroreflector from smoke, dust, and stack gas. Whenever the purge airflow decreases below a predetermined rate (due to a blower motor failure, clogged filter, broken hose, or stack power failure), the mechanism holding the shutter open is deactivated by an airflow sensor installed in the connecting hose between the air-purge blower and the instrument mounting flange. Under stack power failure conditions, the shutters are reset automatically upon restoration of power to the blowers. However, each solenoid may have to be reset manually under high negative or high positive stack pressure conditions.

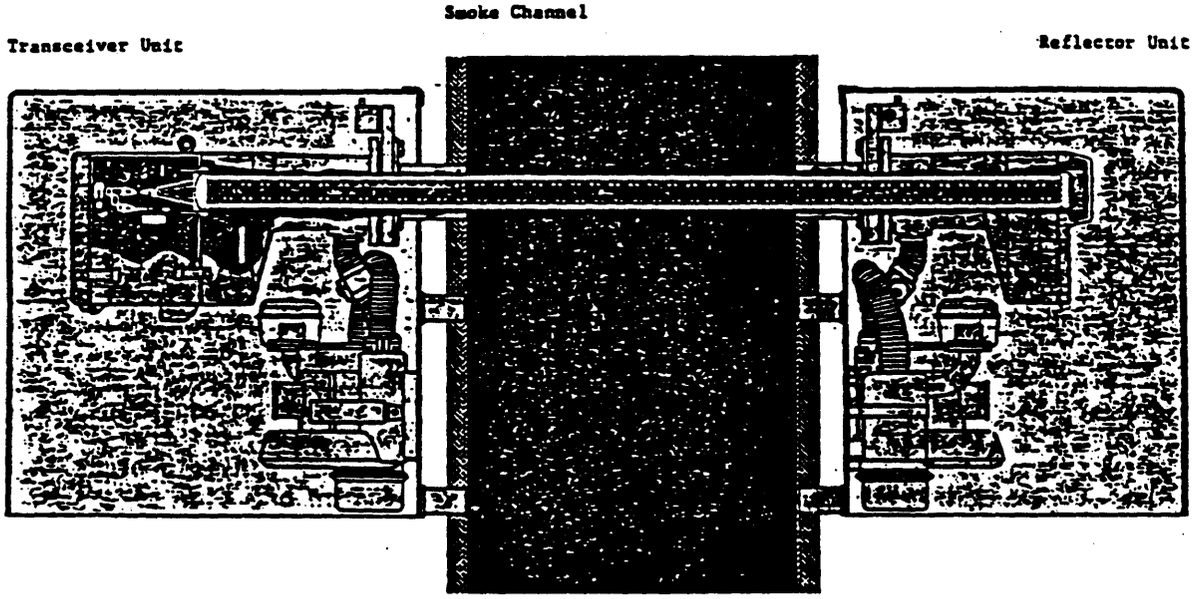


Figure 3-9. Lear Siegler Measurement Controls Corporation RM-4 Transmissometer.

The converter control unit converts the transceiver output to stack exit opacity, controls the daily calibration cycles, and can be used to perform several self diagnostic functions. The converter has a calibration mode switch, fault lamps, and a measurement parameter and scaling switch. The measurement and mode switches allow the automatic gain control (AGC) current, the zero value, and the span value to be checked. A potentiometer mounted on the converter front panel permits the adjustment of the optical density zero value to compensate for minor dust accumulation on transceiver optics.

The opacity monitor measures the amount of light transmitted through the effluent from the transceiver to the retroreflector and back again. The transceiver calculates the optical density of the effluent at the monitor location, or the "path" optical density. In order to provide stack exit opacity data, the path optical density must be corrected to stack exit conditions. The correction factor is calculated as the ratio of the stack exit inside diameter to the measurement path length of the monitor (two times the inside diameter of the stack or duct at the transmissometer location). This ratio is called the "optical path length ratio" (OPLR) when used in reference to the RM-4. The following equations illustrate the relationship between the OPLR, path optical density, and stack exit opacity.

$$OPLR = \frac{L_x}{L_t} = \text{optical path length ratio}$$

where: $L_x$ = stack exit inside diameter (ft)

$L_t$ = measurement path length (ft) = two times the stack inside diameter (or duct width) at the transmissometer location

$$OP_x = \left[1 - 10^{-(OPLR)(OD)}\right] \times 100$$

where: $OP_x$ = stack exit opacity (%)

OD = transmissometer optical density (path)

### 3.3.2 Performance Audit Procedures

Preliminary Data

1. Obtain the stack exit inside diameter and the transmissometer path length (two times the stack or duct inside diameter or width at the transmissometer location) and record these values in blank 1 and blank 2 of the RM-4 audit data sheet.

   Note: Effluent handling dimensions may be acquired from the following sources listed in descending order of reliability: (1) physical measurements, (2) construction drawings, (3) opacity monitor installation or certification documents, and (4) source personnel recollections.

2. Calculate the OPLR (divide the value in blank 1 by the value in blank 2). Record the result in blank 3.

3. Record the source-cited OPLR value in blank 4.

   Note: The OPLR is preset by the manufacturer using information supplied by the source. The value recorded in blank 4 should be the value source personnel agree should be set inside the monitor. Typically, this value is cited from monitor installation data, monitor certification data, or from COMS service reports.

4. Obtain the reference values that the monitor should measure for the daily zero and span calibrations. Record these values in blank 5 and blank 6, respectively.

   Note: These values are set during monitor calibration, and may not be equal to values recorded at installation and/or certification. Records of the zero and span values resulting from the most recent clear-path calibration should be kept by source personnel. If source personnel cannot cite an updated span reference value, the factory assigned span value should be entered in blank 6. The factory assigned filter value is calculated using data collected during the audit and the following formula:

$$\text{Span value} = \left\{1 - \left[10^{-(\text{OPLR})(\text{O.D.})}\right]\right\} \times 100$$

where:

Span value = the factory assigned span filter value in percent opacity

OPLR = the optical path length ratio from blank 4

O.D. = the span filter value in optical density read from the transceiver control panel (blank 21)

5. Inspect the opacity data recorder (strip chart or computer) to ensure proper operation. Annotate the paper with the auditor's name, affiliation plant, unit, date, and time.

## Fault Lamp Checks

The following steps describe the fault lamp analysis for the Lear Siegler RM-4 converter control unit panel. Unless otherwise noted, the audit analysis can continue with illuminated fault lamps, provided that the source has been informed of the fault conditions.

6. Record the status (ON or OFF) of the FAULT fault lamp in blank 7.

   Note: An illuminated FAULT fault lamp indicates that the transceiver AGC current has fallen below 10 milliamps. This condition indicates a malfunction of the measurement lamp, a chopper motor failure, or a fault in the reference signal circuitry. This fault should be repaired before the audit is continued.

7. Record the status (ON or OFF) of the OVER RANGE fault lamp in blank 8.

   Note: An illuminated OVER RANGE fault lamp indicates that the optical density of the effluent exceeds the range selected on the optical density circuit board, which in turn affects the recorded opacity data. If this fault lamp remains illuminated for an extended period of time, switch to a higher optical density range.

Control Unit Configuration Check

8. Record the original position of the MEASUREMENT switch on the control unit panel in blank 9.

Zero Check

9. Turn the MEASUREMENT switch to the 20% OPACITY position.

10. Turn the MODE switch on the control panel to the ZERO position to initiate the zero mode.

11. Record the zero value displayed on the panel meter in blank 10.

12. Record the zero value displayed on the opacity data recorder in blank 11.

    Note: During the zero calibration check, the zero mirror is moved into the path of the measurement beam by a servomotor. The zero mechanism is designed to present the transceiver with a simulated clear-path condition. The daily zero check does not test the actual clear-path zero, nor does it provide a check of cross-stack parameters such as the optical alignment of the transmissometer or drift in the reflectance of the retroreflector. The actual clear-path zero can only be checked during clear-stack or off-stack calibration of the COMS.

Span Check

13. Turn the MEASUREMENT switch to the 100% OPACITY position.

14. Turn the MODE switch to the CALIBRATE position.

15. Record in blank 12 the span value displayed on the control panel meter (0-100% Op scale). Record the span value displayed on the opacity data recorder in blank 13.

16. Turn the MEASUREMENT switch to the OPACITY INPUT position (optional).

17. Record the control panel meter value displayed on the 0-20 milliamp scale in blank 14.

18. Return the MEASUREMENT switch to the 100% OPACITY position.

19. Return the mode switch to the OPERATE position.

    Note: During the span calibration check, a servomotor moves a span filter into the path of the measurement beam while the zero mirror is in place. The span mechanism is designed to provide an indication of the upscale accuracy of the COMS relative to the simulated clear-path zero.

20. Go to the transmissometer location.

Retroreflector Dust Accumulation Check

21. Record the effluent opacity prior to cleaning the retroreflector optics in blank 15.

22. Open the retroreflector housing, inspect and clean the retroreflector optics, and close the housing.

23. Record the post-cleaning effluent opacity in blank 16. Go to the transceiver location.

Transceiver Dust Accumulation Check

24. Record the pre-cleaning opacity in blank 17.

25. Open the receiver head, inspect and clean the optics (primary lens and zero mirror), and close the transceiver head.

26. Record the post-cleaning effluent opacity in blank 18.

    Note: After the transmissometer optics have been cleaned, the zero offset adjustment must be reset manually so that it will not continue to compensate for dust that is no longer present. This operation must be conducted at the control unit. To do this, place the mode switch in the ZERO position and the measurement switch in the 20% OPACITY position. Adjust the OFFSET potentiometer on the front of the control unit until zero is read on the data recorder. Return the Mode and Measurement switches to their original positions.

Fault/Test Check

27. Press the transceiver Fault/Test momentary-action switch and record the milliamp value displayed on the transceiver milliamp meter (0-20 mA) in blank 19.

Note: This combination indicator and momentary-action switch serves two related functions: (1) when the current associated with the AGC circuit falls below 10 milliamperes, the FAULT indicator becomes illuminated. This condition will occur only if the light source burns out, the chopper motor falls out of synchronous speed, or some other fault condition occurs that causes the reference signal to fall below a preset level, and (2) a fault indication (closure) is transmitted on lead 6 to the remote control equipment. When the momentary-action switch is pressed, the milliamp meter indicates the current associated with the AGC circuit. This current should be between 11 and 16 milliamperes.

Optical Alignment Check

28. Determine the monitor alignment by looking through the viewing port and observing whether the beam image is in the circular target.

29. Record whether the image is centered inside the circular target (YES OR NO) in blank 20.

30. Draw the orientation of the beam image in the circle provided on the data form.

    Note: The optical alignment has no effect on the internal checks of the instrument or on the calibration error test; however, if the optical alignment is not correct, the stack opacity data will be biased high, since a portion of the measurement beam will be misdirected before it is returned to the measurement detector.

Span Filter Data Check

31. Record the span filter optical density value from the front of the transceiver control panel in blank 21.

Calibration Error Check

The calibration error check is performed using three neutral density filters and an audit device called an audit jig. When installed on the transmissometer, the audit jig intercepts the measurement light beam and returns it directly to the detector. Performing the calibration error check on-stack using the audit jig and filters determines the linearity of the instrument response relative to the current clear-path zero setting. This calibration error check does not determine the accuracy of the actual instrument clear-path zero or the status of any cross-stack parameters. A true calibration check is performed by moving the on-stack components to a location with minimal ambient opacity, making sure that proper path length and alignments are attained, and then placing the calibration filters in the measurement beam path.

32. Install the audit jig by sliding it onto the transceiver primary lens barrel.

Note: The audit device will not slide on until it is flush with the monitor. Care should be taken not to push it against the zero mirror reflector or to pinch the wires serving the zero mirror motor.

33. Adjust the audit jig iris to produce a 2.0 mA output current on the front panel meter. This simulates the clear-path zero setting of the COMS.

    Note: This allows the auditor to obtain a jig zero value near the zero value on the opacity data recorder. The final jig zero adjustments should be based on readings from the data recorder. The jig zero does not have to be exactly 0% opacity since the audit filter correction equations can account for an offset in the jig zero. A jig zero value in the range of 0-2% opacity is acceptable.

34. Record the audit filter serial numbers and opacity values in blanks 22, 23, and 24.

35. Remove the filters from their protective covers, inspect, and, if necessary, clean them.

36. Record the jig zero value from the opacity data recorder.

    Note: The acquisition of monitor responses from the opacity data recorder requires communication between the auditor at the transmissometer location and an assistant at the data recorder location.

37. Insert the low range neutral density filter into the audit jig.

38. Wait approximately two minutes or until a clear value has been recorded and displayed on the data recorder.

    Note: The audit data should be taken from a data recording/reporting device that presents instantaneous opacity (or opacity data with the shortest available integration period).

39. Record the COMS response to the low range neutral density filter.

40. Remove the low range filter from the audit device and insert the mid-range neutral density filter.

41. Wait approximately two minutes and record the COMS response to the mid range neutral density filter.

42. Remove the mid-range filter from the audit jig and insert the high range filter.

43. Wait approximately two minutes and record the COMS response to the high range neutral density filter.

44. Remove the high range filter, wait approximately two minutes, and record the jig zero value.

Note: If the final jig zero value differs from the initial value by more than 1% opacity, the jig zero should be adjusted to agree with the initial value and the three-filter run (i.e., low, mid, and high) should be repeated.

45. Repeat steps 37 through 44 until a total of five opacity readings are obtained for each neutral density filter.

46. If six-minute integrated opacity data are recorded, repeat steps 36 through 44 once more, changing the waiting periods to 13 minutes.

47. Record the six-minute integrated data.

    Note: In order to acquire valid six-minute averaged opacity data, each filter must remain in the jig for at least two consecutive six-minute periods. The first period will be invalid because it was in progress when the filter was inserted. A waiting period of 13 minutes is recommended.

48. When the calibration error check is complete, remove the audit jig, close the transceiver panel cover, and close the transceiver head.

Zero Current Check (Optional)

Note: This is an optional check to evaluate the zero signal from the transceiver which is unaffected by the zero offset circuitry. The offset potentiometer on the front of the converter unit is used to compensate for minor variations in the instrument zero due to lens dusting.

49. Return to the control unit location and turn the MODE switch to ZERO and the MEASUREMENT switch to the OPTICAL DENSITY INPUT position.

50. Record the zero current value in blank 25.

51. Turn the MODE switch to the OPERATE position and the MEASUREMENT switch to the position recorded in blank 9.

52. Obtain a copy of the audit data from the data recorder.

53. Transcribe the calibration error data from the data recorder into blanks 26 through 51 of the audit data form and complete the audit data calculations.

### 3.3.3 Interpretation of Audit Results

This section is designed to help the auditor interpret the Lear Siegler RM-4 performance audit results. A general discussion of performance audit results is presented in Section 2 of this manual.

Stack Exit Correlation Error Check

The path length correction factor in blank 52 should be within ±2%. This error exponentially affects the opacity readings, resulting in over- or

underestimation of the stack exit opacity. The most common error in computing the OPLR is the use of the flange-to-flange distance in place of the stack or duct inside diameter at the monitor location. This error will result in underestimation of the stack exit opacity and can be identified by comparing the monitor optical path length to the flange-to-flange distance. The flange-to-flange distance should be greater by approximately two to four feet.

Fault Lamp Analysis

Fault lamps are typically associated with parameters that the monitor manufacturer feels are critical to COMS function and to the collection of valid opacity data. The FAULT fault lamp will become illuminated if the current associated with the automatic gain control (AGC) circuit is out-of-specification. The most likely causes of an AGC fault are a burned out measurement light source, a chopper motor failure, or a fault in the AGC circuitry. Source personnel should repair the fault before continuing the audit. The OVER RANGE fault lamp indicates that the opacity monitor is being presented with opacity values that exceed the range setting of the instrument. Although an over range condition will adversely affect the opacity data, it is not necessarily indicative of a COMS malfunction. An over range condition can be corrected by resetting the instrument range.

Control Panel Meter Error (Optional)

The accuracy of the control panel meter is important at sources using the meter during monitor adjustment and calibration. The accuracy of the control unit panel meter is determined by comparing the zero and span reference values to the panel meter output recorded during the COMS calibration check. Errors in the control panel meter should not affect the opacity data reported by the monitoring system unless the control panel meter is used to adjust the calibration of the COMS. At sources using the panel meter data, the panel meter should be adjusted so that the error is less than 2%. Since the control panel meter error is calculated using the zero and span values, any change in these values will cause an erroneous assessment of the control panel meter errors. The span filter value may change due to aging, replacement, etc. Each time the monitor is thoroughly calibrated, the internal zero and span values should be renamed and the new values should be recorded and used in all subsequent adjustments.

Internal Zero and Span Check

The RM-4 internal zero (blank 54) should be set to indicate 0% opacity. A zero greater than 4% opacity is usually due to excessive dust accumulation on the optical surfaces, electronic drift, or data recorder electronic/mechanical offset. Excessive dust on the optical surfaces sufficient to cause a significant zero error may also be indicated by an elevated zero offset reading.

If the zero and span errors are due to a data recorder offset, both errors will be in the same direction and be of the same magnitude.

## Optical Alignment Check

When the transceiver and retroreflector are misaligned, a portion of the measurement beam that should be returned to the measurement detector is misdirected, resulting in a positive bias in the data reported by the COMS. One of the most common causes of misalignment is vibration which may cause the on-stack components to shift slightly on the instrument mounting flanges. Another common cause of misalignment is thermal expansion and contraction of the structure on which the transmissometer is mounted. If the COMS is being audited while the unit is off-line (cold stack), the results of the alignment analysis may not be representative of the alignment of the instrument when the stack or duct is at normal operating temperature.

## Transmissometer Dust Accumulation Check

The results of the dust accumulation check (blank 60) should not exceed 4% opacity. A dust accumulation value of more than 4% opacity indicates that the airflow of the purge system and/or the cleaning frequency of the optical surfaces are inadequate. When determining the optical surface dust accumulation, the auditor should note whether the effluent opacity is reasonably stable (within ±2% opacity) before and after cleaning the optical surfaces. If the effluent opacity is fluctuating by more than ±2%, the dust accumulation analysis should be omitted.

## Calibration Error Check

Calibration error results (blanks 70, 71, and 72) in excess of ±3% are indicative of a non-linear or miscalibrated instrument. However, the absolute calibration accuracy of the monitor can be determined only when the instrument clear-path zero setting is known. If the zero and span are out-of-specification, the calibration error data will often be biased in the same direction as the zero and span errors. Even if the zero and span data indicate that the COMS is calibrated properly, the monitor may still be inaccurate due to an error in the clear-path zero adjustment. The optimum calibration procedure involves using neutral density filters during clear-stack or off-stack COMS calibration. This procedure would establish both the absolute calibration accuracy and linearity of the COMS. If this procedure is impractical and it is reasonable to assume that the clear-path zero is set correctly, the monitor's calibration can be set on-stack using either the neutral density filters or the internal zero and span values.

# SECTION 4

# PERFORMANCE AUDIT PROCEDURES FOR THE DYNATRON OPACITY MONITOR

## 4.1 DYNATRON MODEL 1100 TRANSMISSOMETER

In 1984, Dynatron, Inc. upgraded the Model 1100 visible emissions monitor to the Model 1100M by redesigning the control unit and adding an alignment sight to the transceiver component on the stack. In 1988, Lear Siegler Measurement Controls Corporation acquired the 1100M from Dynatron, Inc. Audit procedures for the Dynatron 1100M and the Lear Siegler Measurement Controls Dynatron 1100M are included in Section 3 of this document.

### 4.1.1 COMS Description

The Dynatron Model 1100 continuous opacity monitoring system (COMS) consists of three major components: the transmissometer, the air-purging system, and the control unit. The transmissometer component consists of a transceiver unit mounted on one side of a stack or duct and a retroreflector unit mounted on the opposite side. The Dynatron monitor employs an electronically modulated light source to eliminate interference from ambient light. The modulated beam is split into reference and measurement beams. The reference beam travels via fiber optics to the reference photodetector (see Figure 4-1). The measurement beam crosses through the effluent to the retroreflector and is reflected back into the transceiver, where it encounters a photodetector identical to the reference detector. Since the COMS output is based on the ratio of the reference and measurement signals, variations in the beam intensity are factored out. The Dynatron 1100 monitor is calibrated internally by turning off the measurement light source and alternately turning on two calibration light sources. One of the light sources is filtered through a low level neutral density filter (<10% opacity) to produce the internal zero response. The other light source is filtered through an upscale neutral density filter to produce the span signal.

The air purging system serves a threefold purpose: (1) it provides an air curtain to keep the protective windows clean; (2) it keeps condensed stack gas moisture from accumulating on the protective windows; and (3) it minimizes thermal conduction from the stack to the instrument. A standard installation has separate air-purging systems for the transceiver and retroreflector units. Each system has a blower that floods the cavity within the instrument mounting flange with filtered ambient air.

The control unit of the Dynatron Model 1100 has a digital display and a display selector for choosing either opacity or optical density. "Lamp," "window," and "air purge" fault lamps warn of monitor malfunctions. A selector knob allows the setting of the automatic calibration frequency, and a zero/span switch allows the monitor to be put into a manual calibration mode. The control unit can provide both instantaneous and integrated stack exit opacity data.

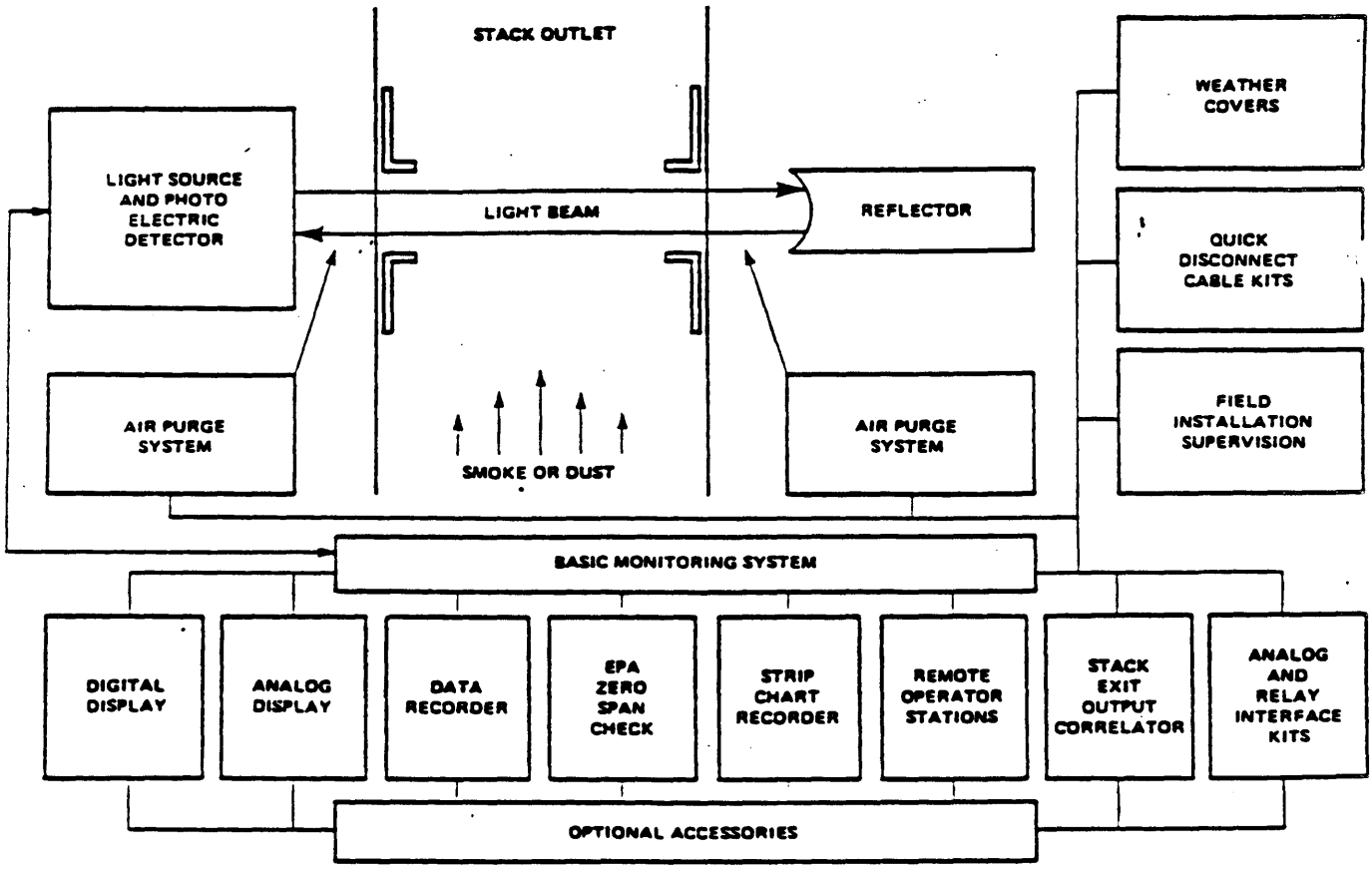


Figure 4-1. Dynatron Model 1100 CEMS Components

The Dynatron opacity monitor measures the amount of light transmitted through the effluent from the transceiver to the retroreflector and back again. The monitor uses this double-pass transmittance to calculate the optical density of the effluent at the monitor location, or the "path" optical density. In order to provide stack exit opacity data, the path optical density must be corrected to stack exit conditions. The correction factor is calculated as the ratio of the stack exit inside diameter to the measurement path length of the monitor (two times the inside diameter of the stack or duct at the transmissometer location). This ratio is called the M Factor by Dynatron. The following equations illustrate the relationships between the M Factor, path optical density, and stack exit opacity.

$$M = \frac{L_x}{L_t} = \text{"M" Factor}$$

where: $L_x$ = stack exit inside diameter (ft)

$L_t$ = measurement path length (ft) = two times the stack inside diameter (or the duct width) at the monitor location

$$OP_x = \left[1 - 10^{-(M)(OD)}\right] \times 100$$

where: $OP_x$ = stack exit opacity (%)

OD = transmissometer optical density (path)

### 4.1.2 Performance Audit Procedures

Preliminary Data

1. Obtain the stack exit inside diameter and the transmissometer measurement path length (two times the stack or duct inside diameter or width at the transmissometer location). Record these values in blanks 1 and 2 of the Dynatron 1100 Performance Audit Data Sheet.

   Note: Effluent handling system dimensions may be acquired from the following sources listed in descending order of reliability: (1) physical measurements, (2) construction drawings, (3) opacity monitor installation or certification documents, and (4) source personnel recollections.

2. Calculate the M Factor (divide the value in blank 1 by the value in blank 2). Record the result in blank 3.

3. Record the source-cited M Factor value in blank 4.

   Note: The M Factor is preset by the manufacturer using information supplied by the source. The value recorded in blank 4 should be the value source personnel agree should be set inside the monitor. Typically, this value is cited from monitor installation data, monitor certification data, or from COMS service reports.

4. Obtain the reference zero and span calibration values. Record these values in blank 5 and blank 6, respectively.

   Note: The reference zero and span calibration values may not be the same as the values recorded during instrument installation and/or certification. The zero and span values recorded in blank 5 and blank 6 should be the reference values recorded during the most recent clear-path calibration of the COMS.

5. Inspect the opacity data recorder (strip chart or computer) to ensure proper operation. Annotate the paper with the auditor's name, affiliation, plant, unit, date, and time.

Fault Lamp Checks

The following steps describe the fault lamps analysis for the Dynatron Model 1100 control unit. Unless otherwise noted, the audit analysis can continue with illuminated fault lamps, provided that the source has been informed of the fault conditions.

6. Record the status (ON or OFF) of the LAMP fault lamp in blank 7.

   Note: An illuminated LAMP fault lamp indicates that the intensity of the measurement lamp is outside of a specific range. This fault is a conservative indicator of possible fluctuations in the lamp voltage. Because the LAMP fault lamp is obscured by the control unit cover frame, it is frequently overlooked during cursory inspections. Source personnel should determine the severity of this fault before the audit is continued.

7. Record the status (ON or OFF) of the WINDOW fault lamp in blank 8.

   Note: An illuminated WINDOW fault lamp indicates that the quantity of dust on the transceiver optics has exceeded the limit preset within the control unit. The opacity data may be biased high by excessive dust on the optics and the auditor should pay particular attention to cleaning the protective window during subsequent audit steps.

8. Record the status (ON or OFF) of the AIR FLOW lamp in blank 9.

   Note: An illuminated AIR FLOW fault lamp indicates a reduction in the flow of purge air to either the transceiver or retroreflector. This condition could jeopardize both the cleanliness of the transmissometer optics and the continued operation of the COMS as a result of

exposure to hot, corrosive stack gas. Plant personnel should be notified of this condition immediately.

9. Record the original position of the AUTOMATIC CALIBRATION TIME (CYCLE TIME) knob on the control unit panel in blank 10.

   Note: The AUTOMATIC CALIBRATION TIME (CYCLE TIME) knob is used to adjust the frequency of calibration cycles.

10. Turn the CYCLE TIME knob to the MANUAL position.

11. Record the original position of the METER DISPLAY knob on the control panel in blank 11.

    Note: The METER DISPLAY knob controls the panel meter output. Stack exit opacity values can be output in percent opacity or in units of optical density. Optical density data are useful during maintenance and calibration of the COMS.

12. Turn the METER DISPLAY knob to the opacity position, if necessary.

Zero Span Check

13. Press the zero/span switch.

    Note: The green zero light should go on during the zero period and the yellow span light should be lit during the span period. The monitor automatically switches from zero to span after approximately three minutes. After a similar period in the span mode, the monitor reverts back to normal operation.

14. Record the zero value displayed on the panel meter in blank 12.

15. Record the zero value displayed on the data recorder in blank 13.

    Note: The cross-stack zero is simulated by the transceiver internal zero optics. The measurement light source is turned off and a zero light source is turned on. Assuming that the clear-path zero setting is correct, checking this simulated zero value provides an indication of the accuracy of the monitor's calibration. It does not, however, provide any indication of cross-stack parameters, such as the actual clear-path zero setting or the optical alignment of the transmissometer.

16. Record the span value displayed on the control panel meter in blank 14.

17. Record the span value displayed on the data recorder in blank 15.

    Note: During the span portion of the calibration cycle, the measurement light source is turned off and the span light source is illuminated, The span light source passes through a neutral density filter to provide an upscale check of the monitor's accuracy with respect to its zero setting.

18. Go to the transmissometer location.

Note: The acquisition of real-time monitor response data requires that there be communication between the auditor at the transmissometer location and an assistant at the opacity data recorder location.

Retroreflector Dust Accumulation Check

19. Record the effluent opacity prior to cleaning the retroreflector protective window in blank 16.

20. Remove, inspect, clean, and replace the retroreflector protective window.

21. Record the post-cleaning effluent opacity in blank 17. Go to the transceiver location.

Transceiver Dust Accumulation Check

22. Record the pre-cleaning effluent opacity in blank 18.

23. Remove, inspect, clean, and replace the transceiver protective window.

24. Record the post-cleaning effluent opacity in blank 19.

Optical Alignment Check

25. If an alignment tube is available, determine the monitor alignment by looking through the tube and observing whether the image of the measurement beam is centered around the retroreflector port on the opposite side of the stack or duct. Always wear safety glasses when performing this step of the audit.

Note: The Dynatron Model 1100 does not have a built-in alignment check system. Many sources have installed sighting tubes near the transceiver to observe the orientation of the measurement beam with respect to the retroreflector port in the stack or duct. Frequently, these sighting tubes are blocked with accumulated particulate. The auditor should note such a condition, if found.

26. Record in blank 20 whether the beam image is centered around the retroreflector port (YES or NO).

27. Draw the orientation of the retroreflector port in the circle provided on the COMS audit data form.

Note: Instrument optical alignment has no effect on the internal checks of the instrument or on the calibration check using the audit jig; however, if the optical alignment is not correct, the stack opacity data will be biased high since a portion of the measurement beam will be misdirected before it is returned to the measurement detector.

Calibration Error Check (Jig Procedure)

The calibration error check is performed using three neutral density filters and an audit device called an audit jig. When installed on the transmissometer, the audit jig intercepts the measurement light beam before it crosses the stack or duct and returns it directly to the measurement detector. Performing the calibration error check on-stack using the audit jig and filters determines the linearity of the instrument response relative to the current clear-path zero setting. This calibration error check does not determine the accuracy of the actual clear-path zero setting, or the status of any cross-stack parameters. A true calibration check is performed by moving the on-stack components to a location with minimal ambient opacity, making sure that the proper path length and alignments are attained, and placing the calibration filters in the measurement beam path.

If the audit jig is not available, or if the jig cannot be installed in the transceiver, the incremental calibration error procedure described in Steps I-28 through I-51 should be used. This procedure factors out the opacity attributed to the transceiver protective window and the effluent. Due to its complexity and possible inaccuracy, the incremental calibration error procedure should be used only as a last resort.

28. Remove the transceiver dirty window detector on the left forward side of of the transceiver. Install the audit jig by inserting it into the dirty window detector opening (with the iris opening facing toward the light source) and tightening the thumb screws.

    Note: If the transceiver does not have a dirty window detect or if the audit jig will not fit into the available opening, the incremental calibration error procedure should be used.

29. Remove the transceiver protective window.

30. Adjust the audit jig iris to produce a 1-2% opacity value on the opacity data recorder. This adjustment simulates the COMS clear-path zero setting.

    Note: Some filter sets intended for incremental calibration checks of Dynatron monitors have an 8-10% "assumed" window opacity value subtracted from the actual filter value. Thus, a filter marked as "20% opacity" might have a total true opacity of 26% (8% Op + 20% Op). It is imperative that the auditor know the actual opacity of each filter. In general, it is recommended that both the assumed filter values (based on the sum of filter opacity and assumed window opacity) and the actual filter values be known. This information should be supplied by the firm that certifies the neutral density filters.

31. Install the transceiver protective window and record the measured window opacity value in Blank 21.

32. Remove the transceiver protective window.

33. Record the audit filter serial numbers and opacity values in blanks 22, 23, and 24.

34. Remove the filters from their protective covers, inspect, and, if necessary, clean them.

35. Record the jig zero value from the opacity data recorder.

    Note: The acquisition of monitor response from the data recorder requires communication between the auditor at the transmissometer location and an assistant at the data recorder location.

36. Insert the low range neutral density filter into the monitor.

37. Wait approximately two minutes or until a clear value has been recorded and displayed on the opacity data recorder.

    Note: The audit data should be taken from a data recording/reporting device that presents instantaneous opacity (or opacity data with the shortest available integration period).

38. Record the COMS response to the low range neutral density filter.

39. Remove the low range filter from the monitor and insert the mid range neutral density filter.

40. Wait approximately two minutes and record the COMS response to the mid range neutral density filter.

41. Remove the mid range filter and insert the high range filter.

42. Wait approximately two minutes and record the COMS response to the high range neutral density filter.

43. Remove the high range filter, wait approximately two minutes, and record the jig zero value.

    Note: If the final jig zero value differs from the initial value by more than 1% opacity, the jig zero should be adjusted to agree with the initial value and the three-filter run (i.e., low, mid, and high) should be repeated.

44. Repeat steps 36 through 43 until a total of five opacity readings are obtained for each neutral density filter.

45. If six-minute integrated opacity data are recorded, repeat steps 35 through 43 once more, changing the waiting periods to 13 minutes.

46. Record the six-minute integrated data, if available.

47. When the calibration error check is complete, remove the audit jig, replace the dirty window detector and the protective window, and close the transceiver protective housing.

48. Return to the control unit location.

49. If necessary, return the AUTOMATIC CALIBRATION (CYCLE) TIMER and the METER DISPLAY knob to the positions recorded in blanks 10 and 11.

50. Obtain a copy of the audit data from the data recorder.

51. Transcribe the calibration error data from the data recorder to blanks 25 through 50 and complete the audit data calculations.

Calibration Error Check (Incremental Procedure)

The incremental calibration error check addresses older Dynatron monitors that do not permit the use of the audit jig. The incremental calibration error check is performed by substituting neutral density filters in place of the transceiver protective window without inserting an audit device. The filters should include an assumed protective window opacity value of approximately 8% (or a more appropriate value as cited by the source or monitor manufacturer). Thus, a filter calibrated to 26% opacity would be "named" or assigned a value of 20% opacity. This check should be performed only when the stack opacity is reasonably steady (varying by no than ±2% opacity). The incremental calibration error check determines the linearity of the instrument response. Since it utilizes all of the components of the measurement system, the incremental calibration error check provides an indication of the transmissometer optical alignment. This calibration check does not provide a test of the actual instrument clear-path zero setting. Only under clear stack conditions will the calibration check provide an indication of the actual clear-path zero setting. A true calibration check can also be obtained by removing the transmissometer from the stack and duplicating the on-stack path length and alignment in a particulate-free environment.

I-28. Record the audit filter serial numbers and opacity values in blanks I-21, I-22, and I-23.

I-29. Remove the filters from their protective covers, inspect, and, if necessary, clean them.

I-30. Wait approximately two minutes and record the effluent opacity as indicated by the opacity data recorder.

I-31. Remove the transceiver protective window and insert the low range neutral density filter.

I-32. Wait approximately two minutes and record the filter opacity value indicated on the opacity data recorder.

I-33. Remove the low range audit filter and replace the transceiver protective window.

I-34. Wait approximately two minutes and record the indicated effluent opacity value.

I-35. Remove the transceiver protective window and insert the mid range audit filter.

I-36. Wait approximately two minutes and record the indicated filter opacity value.

I-37. Remove the mid range filter and replace the transceiver protective window.

I-38. Wait approximately two minutes and record the indicated effluent opacity.

I-39. Remove the transceiver protective window and insert the high range audit filter.

I-40. Wait approximately two minutes and record the indicated filter opacity value.

I-41. Remove the high range audit filter.

I-42. Replace the transceiver protective window.

I-43. Wait approximately two minutes and record the indicated effluent opacity.

I-44. Repeat steps I-31 through I-43 until a total of five opacity readings is obtained for each neutral density filter.

I-45. If six-minute integrated opacity data are recorded, repeat steps I-30 through I-43, changing the waiting periods to 13 minutes.

I-46. Record the six-minute integrated data, if available.

I-47. Replace the transceiver measurement window for the last time. Ensure that the transceiver protective window is properly installed and close the transceiver housing.

I-48. Return to the control unit location.

I-49. If necessary, return the AUTOMATIC CALIBRATION (CYCLE) TIMER and the METER DISPLAY to the positions recorded in <u>blanks 10 and 11</u>, respectively.

I-50. Obtain a copy of the audit data from the opacity data recorder.

I-51. Transcribe the calibration error response data from the opacity data recorder to audit data sheet blanks I-24 through I-61 and complete the incremental calibration error calculations.

### 4.1.3 Interpretation of Audit Results

This section is designed to help the auditor interpret the Dynatron 1100 performance audit results. A general discussion of performance audit results is presented in Section 2 of this manual.

#### Stack Exit Correlation Error Check

The path length correction error in blank 51 should be within ±2%. This error exponentially affects the opacity readings, resulting in over- or under-estimation of the stack exit opacity. The most common error in computing the M Factor is the use of the flange-to-flange distance in place of the stack/duct inside diameter at the monitor location. This error will result in underestimation of the stack exit opacity and can be identified by comparing the monitor optical path length to the flange-to-flange distance; the flange to flange distance should be greater by approximately two to four feet.

#### Fault Lamp Analysis

Fault lamps are typically associated with parameters that the monitor manufacturer feels are critical to COMS function and to the collection of valid opacity data. The parameters associated with each of the Model 1100 control unit fault lamps is discussed in the audit procedures. With the exception of lamps that warn of elevated opacity levels (alarm or warning lamps), an illuminated fault lamp indicates that the COMS is not functioning properly.

#### Control Panel Meter Error Check

The accuracy of the control panel meter is important at sources using the meter during monitor adjustment and calibration. The accuracy of the control unit panel meter is determined by comparing the zero and span reference values to the panel meter output recorded during the COMS calibration check. Errors in the control panel meter should not affect the opacity data reported by the monitoring system unless the control panel meter is used to adjust the calibration of the COMS. The percent error values associated with the control panel meter are found in blanks 52 and 54. At sources using the panel meter data, the panel meter should be adjusted so that the error is less than 2%. Since the control panel meter error is calculated using the internal zero and span values, any change in the specified values for the zero or span will cause an erroneous assessment of the control panel meter errors. Each time the monitor is thoroughly calibrated, the internal zero and span values should be renamed and the new values should be recorded and used in all subsequent adjustments.

Internal Zero and Span Check

The Dynatron Model 1100 internal zero is typically set to indicate 2-10% opacity since the monitor will not indicate negative opacity values. A zero error (blank 53) greater than 4% opacity is usually due to miscalibration of the instrument or data recorder electronic/mechanical offset. Instrument span error (blank 55) may be caused by the same problems that cause zero errors. In addition, a span error may be caused by an improperly named span reference value.

If the zero and span errors are due to a data recorder offset, both errors will be in the same direction and will be of the same magnitude.

Transmissometer Dust Accumulation Check

The results of the dust accumulation check (blank 58) should not exceed 4%. A dust accumulation value of more than 4% opacity indicates that the airflow of the purge system and/or the cleaning frequency of the optical surfaces are inadequate. When determining the optical surface dust accumulation, the auditor should note whether the effluent opacity is reasonably stable (within ±2% opacity) before and after cleaning the optical surfaces. If the effluent opacity is fluctuating by more than ±2%, the dust accumulation analysis should be omitted.

Optical Alignment Check

When the transceiver and retroreflector are misaligned, a portion of the measurement beam that should be returned to the measurement detector is misdirected, resulting in a positive bias in the data reported by the COMS. One of the most common causes of misalignment is vibration which may cause the on-stack components to shift slightly on the instrument mounting flanges. Another common cause of misalignment is thermal expansion and contraction of the structure on which the transmissometer is mounted. If the COMS is being audited while the unit is off-line (cold stack), the results of the alignment analysis may not be representative of the alignment of the instrument when the stack or duct is at normal operating temperature.

Calibration Error Check

Calibration error results (blanks 68, 69, and 70) or blanks I-89, I-90, I-91) in excess of ±3% are indicative of a non-linear or miscalibrated instrument. However, the absolute calibration accuracy of the monitor can be determined only when the instrument clear-path zero setting is known. If the zero and span data are out of specification, the calibration error data will often be biased in the same direction as the zero and span errors. Even if the zero and span data indicate that the COMS is calibrated properly, the monitor may still be inaccurate due to error in the clear-path zero adjustment. The optimum calibration procedure involves using neutral density filters during clear-stack or off-stack COMS calibration. This procedure would establish both the absolute calibration accuracy and linearity of the COMS. If this procedure is impractical, and it is reasonable to assume that the clear-path zero is set correctly, the monitor's calibration can be set on-stack using either the neutral density filters or the internal zero and span values.

# SECTION 5

# PERFORMANCE AUDIT PROCEDURES FOR THERMO ENVIRONMENTAL INSTRUMENTS, INC. OPACITY MONITORS

## 5.1 THERMO ENVIRONMENTAL INSTRUMENTS, INC. MODEL 400 TRANSMISSOMETER AND MODEL 500 CONTROL UNIT

The Model 400 transmissometer was originally marketed by the Contraves Goerz Corporation. Thermo Environmental Instruments, Inc. acquired the Model 400 in 1984.

### 5.1.1 COMS Description

The Thermo Environmental Instruments Model 400 continuous opacity monitoring system (COMS) consists of three major components: the transmissometer, the air-purging system, and the Model 500 control unit. The transmissometer component consists of a transceiver unit mounted on one side of a stack or duct and a retroreflector unit mounted on the opposite side. The transceiver unit contains a light source, a photodiode detector, and the optical, mechanical, and electronic components used in monitor operation and calibration.

Figure 5-1 illustrates the general arrangement of the transceiver and retroreflector units on the stack. The transceiver uses a single lamp single detector system, employing both internal and external choppers. The internal chopper modulates the measurement beam to eliminate interference from ambient light. The external three-segmented chopper produces alternating calibration and stack opacity measurements and allows the COMS to automatically compensate for dust on the transceiver optics. The output signal from the transceiver (double-pass, uncorrected transmittance) is processed into single-pass stack exit opacity by the control unit.

The air purging system serves a threefold purpose: (1) it provides an air window to keep exposed optical surfaces clean; (2) it protects the optical surfaces from condensation of stack gas moisture; and (3) it minimizes thermal conduction from the stack to the instrument. A standard installation has separate air purging systems for the transceiver and retroreflector units.

The Model 500 digital control unit (Figure 5-2) converts the double-pass transmittance output from the transceiver to single-pass linear optical density. The control unit then applies the stack taper ratio (STR) to the signal to correct the COMS output to stack exit opacity. (The STR is expressed as the ratio of the stack exit inside diameter to the stack or duct inside diameter at the transmissometer location.) The STR setting can be checked by manipulating a switch inside the control unit. The control unit also contains an integrator which compiles the above opacity data and calculates a discrete data average (typically six minutes). This function may not be used at facilities employing a computer to reduce and record opacity data because the computer can perform the integration. Note that the Model 500 control unit has a lamp test button that lights all fault and control lamps.

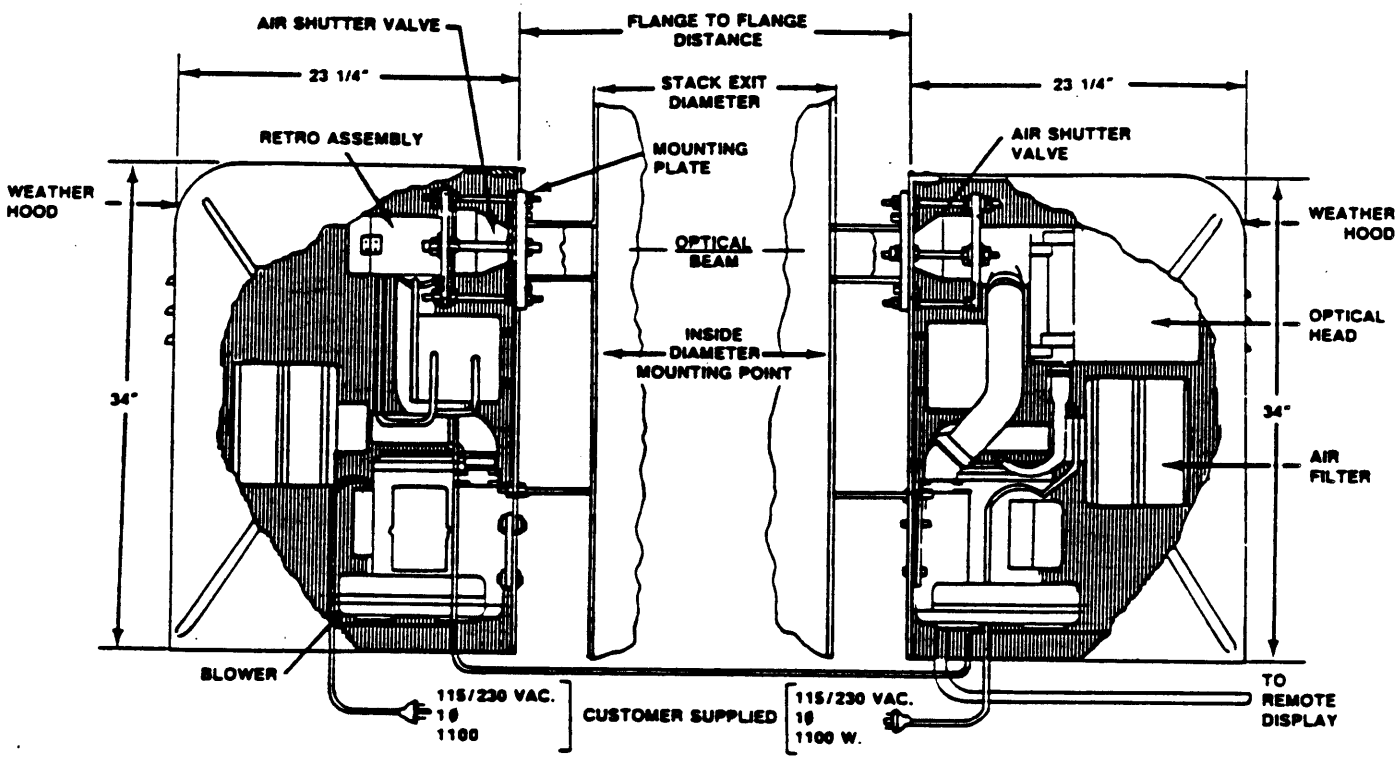


Figure 5-1. Thermo Environmental Instruments Model 400 Transmissometer.

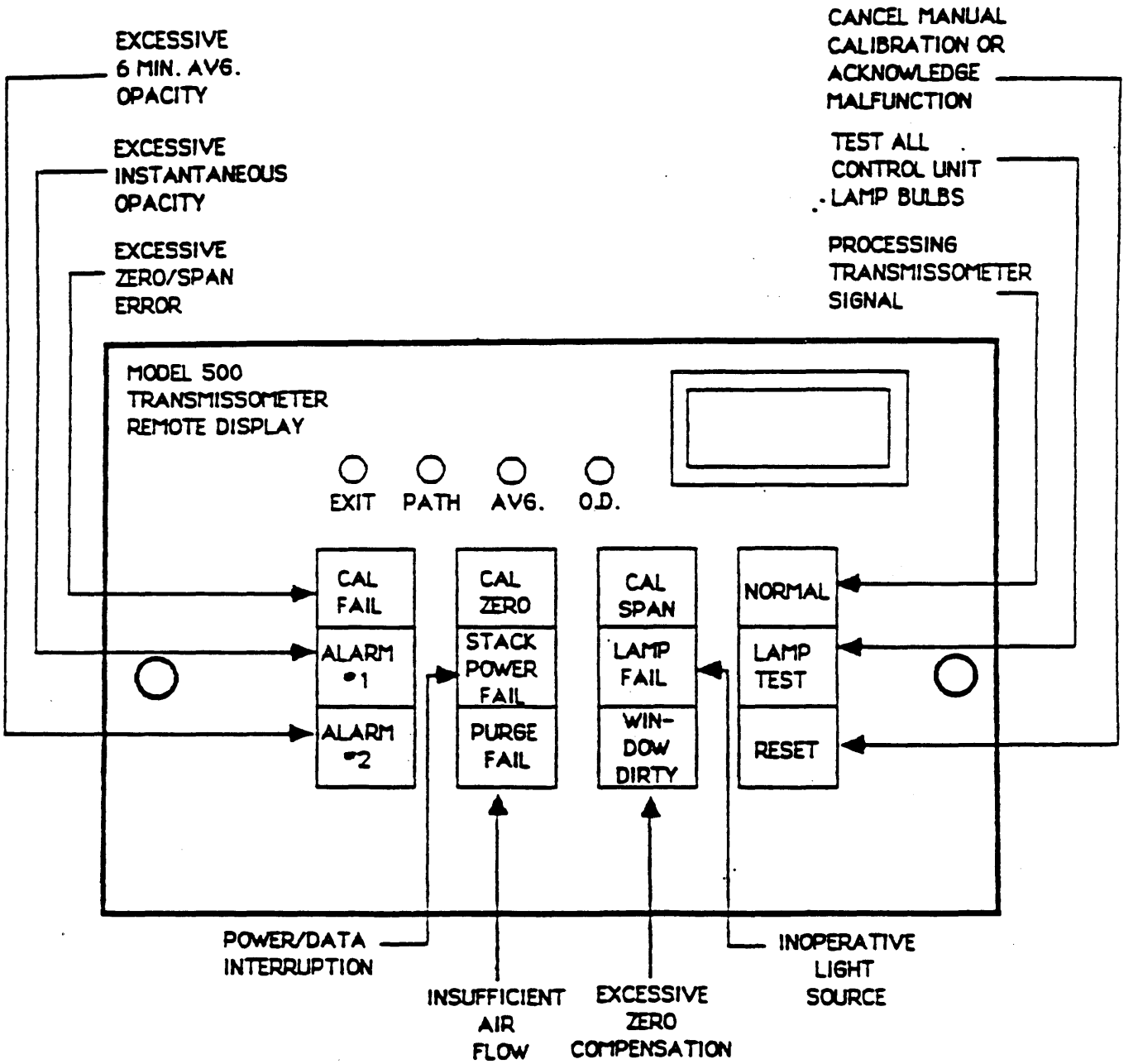


Figure 5-2. Thermo Environmental Instruments Model 500 Control Unit.

The Model 400 opacity monitor measures the amount of light transmitted through the effluent from the transceiver to the retroreflector and back again. The control unit uses this transmittance to calculate the optical density of the effluent at the monitor location, or the "path" optical density. In order to provide stack exit opacity data, the path optical density must be corrected to stack exit conditions. The correction factor is expressed as the ratio of the stack exit inside diameter to the inside diameter of the stack or duct at the monitor location. This ratio is called the stack taper ratio (STR) by Thermo Environmental Instruments. The following equations illustrate the relationship between the STR, path optical density, and stack exit opacity.

$$STR = \text{stack taper ratio} = L_x/L_t$$

$L_x$ = stack exit inside diameter (ft)

$L_t$ = the stack or duct inside diameter at the monitor location (ft)

$$OP_x = \left[1 - 10^{-(STR)(OD)}\right] \times 100$$

where: $OP_x$ = stack exit opacity (%)

OD = transmissometer optical density (path)

### 5.1.2 Performance Audit Procedures

Preliminary Data

1. Obtain the stack exit inside diameter and the stack or duct inside diameter at the transmissometer location. Record these values in blanks 1 and 2 of the Thermo Environmental Instruments Model 400 Performance Audit Data Sheet.

   Note: Effluent handling system dimensions may be acquired from the following sources listed in descending order of reliability: (1) physical measurements, (2) construction drawings, (3) opacity monitor installation or certification documents, and (4) source personnel recollections.

2. Calculate the STR (divide the value in blank 1 by the value in blank 2). Record the result in blank 3.

3. Record the source-cited STR value in blank 4.

   Note: The STR is preset by the manufacturer using information supplied by the source. The value recorded in blank 4 should be the value source personnel agree should be set inside the monitor. Typically, this value is cited from monitor installation data, monitor certification data, or from

COMS service reports. The STR can be displayed on the front panel meter of the control unit by pressing pushbutton 5/K on the linerizer/integrator PC card inside the unit. This operation should only be attempted by qualified personnel.

4. Obtain the reference zero and span calibration values. Record these values in blank 5 and blank 6, respectively.

   Note: The reference zero and span calibration values may not be the same as the values recorded during instrument installation and/or certification. The zero and span values recorded in blank 5 and blank 6 should be the reference values recorded during the most recent clear-path calibration of the COMS.

5. Inspect the opacity data recorder (strip chart or computer) to ensure proper operation. Annotate the paper with the auditor's name, affiliation, plant, unit, date, and time.

Fault Lamp Checks

The following steps describe the fault lamps analysis for the Model 500 control unit. Unless otherwise noted, the audit analysis can continue with illuminated fault lamps, provided the source has been informed of the fault conditions.

6. Record the status (ON or OFF) of the CAL FAIL lamp in blank 7.

   Note: An illuminated CAL FAIL lamp indicates that the most recent automatic zero and/or span calibration responses were not within the range of acceptable values set within the control unit.

7. Record the status (ON or OFF) of the DIRTY WINDOW fault lamp in blank 8.

   Note: An illuminated DIRTY WINDOW fault lamp indicates that the quantity of dirt accumulated on the transceiver optics has exceeded preset limits. This fault condition can jeopardize the quality of the monitoring data.

8. Record the status (ON or OFF) of the PURGE AIR fault lamp in blank 9.

   Note: An illuminated PURGE AIR fault lamp indicates that the transceiver and/or retroreflector purge air flow rate is reduced. This fault does not preclude the completion of the audit.

9. Record the status (ON or OFF) of the STACK POWER fault lamp in blank 10.

   Note: An illuminated STACK POWER fault lamp indicates a loss of power to the transmissometer. Power must be restored before the audit can continue.

10. Record the status (ON or OFF) of the LAMP FAILURE fault lamp in blank 11.

    Note: An illuminated LAMP FAILURE fault lamp indicates that the measurement beam intensity is insufficient to make accurate cross-stack measurements. This fault will jeopardize the quality of the monitoring data and should be corrected immediately. If the measurement lamp is replaced, the audit should be postponed for several hours to permit equilibration of the measurement system.

11. Record the status (ON or OFF) of the ALARM fault lamp in Blank 12.

    Note: An illuminated ALARM fault lamp indicates that the opacity of the effluent exceeds a value selected by the source. This fault has no effect on the accuracy of the monitoring data or on the completion of the audit.

12. Press the CAL ZERO switch on the control panel to initiate the zero mode.

    Note: The green NORMAL light should go out when the zero mode is initiated. The yellow CAL light and the green ZERO light should remain illuminated.

13. Record the zero value displayed on the panel meter in blank 13.

14. Record the zero value displayed on the data recorder in blank 14.

    Note: During the zero calibration check, the COMS outputs the signal produced by reading the zero segment of the calibration wheel. The zero mechanism is designed to present the transceiver with a simulated clear-path condition. The daily zero check does not test the actual clear-path zero, nor does it provide an indication of cross-stack parameters such as the optical alignment of the transmissometer or drift in the reflectance of the retroreflector. The actual clear-path zero can only be checked during clear-stack or off-stack calibration of the COMS.

15. Press the CAL SPAN switch to initiate the span mode.

16. Record the span value displayed on the control panel meter in blank 15. Record the span value displayed on the data recorder in blank 16. Go to the transceiver location.

    Note: During the span calibration check, the COMS outputs the signal produced by reading the span segment of the calibration wheel. The calibration mechanism is designed to provide an indication of the upscale accuracy of the COMS.

Retroreflector Dust Accumulation Check

17. Record the effluent opacity prior to cleaning the retroreflector optics in blank 17.

18. Open the retroreflector, inspect and clean retroreflector optics, and close the retroreflector.

19. Record the post-cleaning effluent opacity in blank 18.

Transceiver Dust Accumulation Check

20. Record the pre-cleaning effluent opacity in blank 19.

21. Open the transceiver, turn off the chopper motor switch, stop the chopper, clean the transceiver exit window, turn on the chopper motor switch, and close the transceiver.

    Note: The chopper motor is stopped by turning off the toggle switch in the lower left corner of the transceiver control panel. This switch also turns off the measurement beam.

22. Record the post-cleaning effluent opacity in blank 20.

Optical Alignment Check

23. Determine the monitor alignment by looking through the viewing port on the back of the transceiver and observing whether the beam image is centered on the target cross-hairs.

24. Record whether the image is centered on the target (YES or NO) in blank 21.

25. Draw the orientation of the beam image in the circle provided on the audit data form.

    Note: The optical alignment has no effect on the internal checks of the instrument or on the calibration error test. However, if the optical alignment is not correct, the stack opacity data will be biased high since a portion of the measurement beam will be misdirected before it is returned to the measurement detector.

Calibration Error Check

The calibration error check is performed using three neutral density filters and an audit device called an audit jig. When installed on the transmissometer, the audit jig intercepts the measurement light beam and returns it directly to the measurement detector. Performing the calibration error check on-stack using the audit jig and filters determines the linearity of the instrument response relative to the current clear-path zero setting. This calibration error check does not determine the accuracy of the actual instrument clear-path zero, or the status of any cross-stack parameters. A true calibration error test is performed by moving the on-stack components to a location with minimal ambient opacity, making sure

that the proper path length and alignments are attained, and then placing the calibration filters in the measurement beam path.

Note: Thermo Environmental Instruments supplies a monitor-specific audit jig with each monitoring system. If available, the audit jig supplied with the COMS should be used during the audit because it is preadjusted to simulate the correct clear-path zero value when installed on the transceiver unit. If a monitor-specific device is not available, the auditor should supply a similar device with an adjustable iris. Following installation of this audit device, the iris should be adjusted to produce a jig zero value of 0-2% opacity on the opacity data recorder.

26. Stop the chopper and install the audit jig by placing it over the primary lens and tightening the attached set screw.

    Note: The audit device is not properly installed until it is flush with the monitor. Be certain that the chopper will not contact the audit jig when the monitor is put back into operation. Do not bend or otherwise damage the chopper blades.

27. Restart the chopper and allow the transceiver 2-3 minutes to warm-up.

    Note: The jig zero value should be based on readings from the data recorder. The jig zero does not have to be exactly 0% opacity since the audit filter correction equations can account for an offset in the jig zero. A jig zero value in the range of 0-2% opacity is acceptable.

28. Record the audit filter serial numbers and opacity values in <u>blanks 22, 23, and 24</u>.

29. Remove the filters from their protective covers, inspect, and, if necessary, clean them.

30. Record the jig zero value from the data recorder.

    Note: The acquisition of monitor responses from the data recorder requires communication between the auditor at the transmissometer location and an assistant at the data recorder location.

31. Insert the low range neutral density filter into the audit jig.

32. Wait approximately two minutes or until a clear value has been recorded and displayed on the data recorder.

    Note: The audit data should be taken from a data recording/reporting device that presents instantaneous opacity (or opacity data with the shortest available integration period).

33. Record the COMS response to the low range neutral density filter.

34. Remove the low range filter from the audit device and insert the mid range neutral density filter.

35. Wait approximately two minutes and record the COMS response to the mid range neutral density filter.

36. Remove the mid range filter from the audit jig and insert the high range filter.

37. Wait approximately two minutes and record the COMS response to the high range neutral density filter.

38. Remove the high range filter, wait approximately two minutes, and record the jig zero value.

    Note: If the final jig zero value differs from the initial value by more than 1% opacity, the zero should be reset to agree with the initial zero value, and the 3-filter run should be repeated.

39. Repeat steps 31 through 38 until a total of five opacity readings are obtained for each neutral density filter.

40. If six-minute integrated opacity data are recorded, repeat steps 30 through 38 once more, changing the waiting periods to 13 minutes.

41. Record the six-minute integrated data.

    Note: In order to acquire valid six-minute integrated opacity data, each filter must remain in the jig for at least two consecutive six-minute periods. The first period will be invalid because it was in progress when the filter was inserted. A waiting period of 13 minutes is recommended.

42. When the calibration error check is complete, stop the chopper, remove the audit jig, restart the chopper, and close the transceiver head.

43. Return to the control unit/data recorder location and obtain a copy of the audit data from the data recorder.

44. Transcribe the calibration error data from the data recorder to Blanks 25 through 50 of the performance audit data form.

### 5.1.3 Interpretation of Audit Results

This section is designed to help the auditor interpret the Model 400 performance audit results. A general discussion of performance audit results is presented in Section 2 of this manual.

#### Stack Exit Correlation Error Check

The path length correction error in blank 51 should be within ±2%. This error exponentially affects the opacity readings, resulting in over- or under-estimation of the stack exit opacity. The most common error in computing the STR is the use of the flange-to-flange distance in place of the stack or duct inside diameter at the monitor location. This error will result in under-estimation of the stack exit opacity and can be identified by comparing the

monitor optical path length to the flange-to-flange distance. The flange-to-flange distance should be greater by approximately two to four feet.

Fault Lamp Analysis

Fault lamps are typically associated with parameters that the monitor manufacturer feels are critical to COMS function and to the collection of valid opacity data. The parameters associated with each of the Model 500 control unit fault lamps is discussed in the audit procedures. With the exception of lamps that warn of elevated opacity levels (alarm or warning lamps), an illuminated fault lamp indicates that the COMS is not functioning properly.

Internal Zero and Span Check

The internal zero should be set to indicate 0% opacity. A zero error (blank 53) greater than 4% opacity is usually caused by miscalibration or malfunction of one or more COMS components, or by data recorder electronic/mechanical offset. Instrument span error (blank 55) may be caused by the same problems that cause zero errors. A span error may also be caused by an inaccurately named calibration wheel span segment.

If the zero and span errors are due to a data recorder offset, both errors will be in the same direction and will be of the same magnitude.

Transmissometer Dust Accumulation Check

The results of the dust accumulation check should not exceed 4% opacity. A dust accumulation value of more than 4% opacity may indicate that the airflow of the purge system and/or the cleaning frequency of the optical surfaces are inadequate. When determining the optical surface dust accumulation, the auditor should note whether the effluent opacity is reasonably stable (within ±2% opacity) before and after the cleaning of the optical surfaces. If the effluent opacity is fluctuating by more than ±2%, the dust accumulation analysis should be omitted.

Optical Alignment Check

When the transceiver and retroreflector are misaligned, a portion of the measurement beam that should be returned to the measurement detector is misdirected, resulting in a positive bias in the data reported by the COMS. One of the most common causes of misalignment is vibration which may cause the on-stack components to shift slightly on the instrument mounting flanges. Another common cause of misalignment is thermal expansion and contraction of the structure on which the transmissometer is mounted. If the COMS is being audited while the unit is off-line (cold stack), the results of the alignment analysis may not be representative of the alignment of the instrument when the stack or duct is at normal operating temperature.

Calibration Error Check

Calibration error results (blanks 68, 69, and 70) in excess of ±3% are indicative of a non-linear or miscalibrated instrument. However, the absolute calibration accuracy of the monitor can be determined only when the

instrument clear-path zero setting is known. If the zero and span are out-of-specification, the calibration error data will often be biased in the same direction as the zero and span errors. Even if the zero and span data indicate that the COMS is calibrated properly, the monitor may still be inaccurate due to error in the clear-path zero adjustment. The optimum calibration procedure involves using neutral density filters during clear-stack or off-stack COMS calibration. This procedure would establish both the absolute calibration accuracy and linearity of the COMS. If this procedure is impractical, and it is reasonable to assume that the clear-path zero is set correctly, the monitor's calibration can be set using either the neutral density filters or the internal zero and span values.

## 5.2 THERMO ENVIRONMENTAL INSTRUMENTS MODEL 1000A

The audit procedures presented in this section apply to the Thermo Environmental Instruments Model 1000A and to the Environmental Data Corporation (EDC) Model 1000A.

### 5.2.1 COMS Description

The Thermo Environmental Instruments Model 1000A continuous opacity monitoring system (COMS) consists of three major components: the transmissometer, the air-purging system, and the data acquisition system. The transmissometer component consists of a transceiver unit mounted on one side of a stack or duct and a retroreflector unit mounted on the opposite side. The transceiver unit contains a light source, a photodiode detector, and the optical, mechanical, and electronic components used in monitor operation and calibration. The output signal from the transceiver (double-pass, uncorrected transmittance) is transmitted to a control unit or directly to an opacity data recorder. The transceiver zero and span signals are monitored continuously and are electronically compensated through a gain control circuit to ensure that the signals remain constant. Since the electronic gain compensation affects the zero, span and measurement signal amplitude equally, variations in measurement lamp intensity do not affect the measurement signal.

The air purging system serves a threefold purpose: (1) it provides an air window to keep exposed optical surfaces clean, (2) it protects the optical surfaces from condensation of stack gas moisture, and (3) it minimizes thermal conduction from the stack to the instrument. A standard installation has separate air-purging systems for the transceiver and retroreflector units. Each system has a blower that floods the instrument mounting flange with filtered ambient air.

The opacity monitor measures the amount of light transmitted through the effluent from the transceiver to the retroreflector and back again. The monitor uses this double-pass transmittance to calculate the optical density of the effluent stream at the monitor location, or the "path" optical density. In order to provide stack exit opacity data, the path optical density must be corrected to stack exit conditions. The correction factor is expressed as the ratio of the stack exit inside diameter to the measurement path length (two times the stack or duct inside diameter at the transmissometer location). The following equations illustrate the relationship between this ratio, path optical density, and stack exit opacity.

$$\frac{L_x}{L_t} = \text{stack exit correction factor}$$

where: $L_x$ = stack exit inside diameter (ft)

$L_t$ = measurement path length (ft) = two times the stack inside diameter (or the duct width) at the monitor location

$$OP_x = \left[1 - 10^{-(L_x/L_t)(OD)}\right] \times 100$$

where: $OP_x$ = stack exit opacity (%)

OD = transmissometer optical density (path)

### 5.2.2 Performance Audit Procedures

Preliminary Data

1. Obtain the stack exit inside diameter and the transmissometer measurement path length (two times the stack or duct inside diameter at monitor location). Record these values in blanks 1 and 2 of the 1000A Performance Audit Data Sheet. If the monitor uses a slotted tube inside the stack or duct, the optical path length ($L_t$) is equal to two times the length of the slotted portion of the tube.

   Note: Effluent handling system dimensions may be acquired from the following sources listed in descending order of reliability: (1) physical measurements, (2) construction drawings, (3) opacity monitor installation/certification documents, and (4) source personnel recollections. Note that the monitor path length is two times the length of the inside diameter of the stack at the monitor installation location.

2. Calculate the optical path length correction factor (divide the value in blank 1 by the value in blank 2). Record the result in blank 3.

3. Record the source-cited optical path length correction factor in blank 4.

   Note: The optical path length correction factor is preset by the manufacturer using information supplied by the source. The value recorded in blank 4 should be the value source personnel agree should be set inside the monitor. Typically, this value is cited from monitor installation data, monitor certification data, or from COMS service reports.

4. Obtain the reference zero and span calibration values. Record these values in blank 5 and blank 6, respectively.

   Note: The reference zero and span calibration values may not be the same as the values recorded during instrument installation and/or certification. The zero and span values recorded in blank 5 and blank 6 should be the reference values recorded during the most recent clear-path calibration of the COMS.

Monitoring System

This section describes the procedures used to gather the information needed to ascertain whether the monitoring system is functioning properly. Since the 1000A does not have a control unit, the zero and span checks may be performed in the control room only if the source has installed a CAL-INITIATE button. Otherwise, this check must be performed at the transmissometer location.

5. Inspect the opacity data recorder (strip chart or computer) to ensure proper operation. Annotate the data record with the auditor's name, affiliation, plant, unit, date, and time.

Zero/Span Check

6. If the source has installed a switch to initiate the internal zero and span functions, initiate the zero and span cycle by pressing the CAL-INITIATE button.

   Note: The monitor will remain in the zero mode for approximately three minutes. The span mode will follow automatically for an additional three minutes. When the calibration cycle is complete, the monitor will automatically return to normal operation. The cross-stack zero is simulated using the zero mirror in the transceiver. The zero and span checks provide an indication of the accuracy of the COMS relative to the clear-path setting. They do not, however, indicate optical misalignment or the actual instrument clear-path zero setting.

7. Record the zero and span responses in blanks 7 and 8, respectively.

8. If there is no CAL-INITIATE button in the control room, the calibration cycle will have to be initiated from the transmissometer location. Go to the transmissometer location and locate the MODE switch next to the input/output cable on the front of the transceiver.

9. Move the MODE switch to the up position (ZERO).

10. Allow the monitor to operate at least three minutes for the chart recorder to log the zero response. Wait 13 minutes if the monitoring system processes the data through a six-minute averaging circuit.

11. Move the MODE switch to the down position (SPAN).

12. Wait another 3 or 13 minutes (depending upon the use of an averaging circuit) for the chart recorder to log the span response.

13. Return the MODE switch to the center position (OPERATE).

14. Record the COMS zero and span responses in blanks 7 and 8, respectively.

Retroreflector Dust Accumulation Check

15. Record the effluent opacity prior to cleaning the retroreflector optics in blank 9.

16. Pull up and clean the window that separates the retroreflector from the stack.

17. Record the post-cleaning instantaneous effluent opacity in blank 10.

Transceiver Dust Accumulation Check

18. Record the pre-cleaning effluent opacity in blank 11.

19. Pull up and clean the window that separates the light source from the stack.

20. Record in blank 12 the post-cleaning effluent opacity.

Calibration Error Check

The calibration error check is performed by installing an EDC filter holder assembly (P/N 32269) in front of the corner cube retroreflector and securing the filter holder assembly by means of two Allen head screws. The neutral density filter slides (mounted in EDC filter housings) are placed into the filter holder assembly in the order described below. This check should be performed only when the effluent opacity is reasonably stable. The calibration check provides a determination of the linearity of the instrument response and utilizes all of the components of the measurement system. This calibration check does not provide a test of the actual clear-path zero setting. A true calibration check is performed by moving the on-stack components to a location with minimal ambient opacity, making sure that the proper path length and alignments are attained, and then placing the calibration filters in the measurement beam path.

Note: Avoid eye contact with the UV light source located inside the transceiver unit.

21. Record the audit filter serial numbers and opacity values in blanks 13, 14, and 15.

22. Remove the low range filter from its protective cover, and, if necessary, clean it.

23. Wait approximately two minutes and record the effluent opacity indicated by the opacity data recorder.

24. Insert the low range neutral density filter.

25. Wait approximately two minutes and record the COMS response to the low range neutral density filter.

26. Remove the low range filter, wait approximately two minutes, and record the effluent opacity.

27. Remove the mid range filter from its protective cover, inspect, and, if necessary, clean it.

28. Insert the mid range audit filter.

29. Wait approximately two minutes and record the COMS response to the mid range neutral density filter.

30. Remove the mid range filter, wait approximately two minutes, and record the effluent opacity.

31. Remove the high range filter from its protective cover, inspect, and, if necessary, clean it.

32. Insert the high range audit filter.

33. Wait approximately two minutes and record the COMS response to the high range neutral density filter.

34. Remove the high range filter.

35. Wait approximately two minutes and record the effluent opacity.

36. Repeat steps 24 through 35 until a total of five opacity readings is obtained for each neutral density filter.

    If six-minute integrated opacity data are recorded, repeat steps 23 through 35 once more, changing the waiting periods to 13 minutes.

37. Record the six-minute integrated data, if available.

38. Remove the filter holder and secure the retroreflector. Return to the control unit location.

39. Obtain a copy of the audit data from the opacity data recorder.

40. Transcribe the calibration error data from the opacity data recorder to blanks 16 through 53 of the audit data sheet and complete the audit data calculations.

### 5.2.3 Interpretation of Audit Results

This section is designed to help the auditor interpret the Model 1000A performance audit results. A general discussion of performance audit results is presented in Section 2 of the manual.

#### Stack Exit Correlation Error Check

The path length correction error in blank 87 should be within ±2%. This error exponentially affects the opacity readings, resulting in over- or underestimation of the stack exit opacity. The most common error in computing the optical path length correction factor is the use of the flange-to-flange distance in place of the stack/duct inside diameter at the monitor location. This error will result in an underestimation of the stack exit opacity and can be identified by comparing the monitor optical path length to the flange-to-flange distance. The flange-to-flange distance should be greater by approximately two to four feet.

## Internal Zero and Span Check

The 1000A internal zero should be set to indicate 0% opacity. A zero error (blank 88) greater than 4% opacity is usually due to excessive dust accumulation on the optical surfaces, electronic drift, or data recorder electronic/mechanical offset. Note that the EDC 1000A does not automatically compensate for dust accumulation on the transmissometer exit window (i.e., zero compensation). Instrument span error (blank 89) may be caused by the same problems that cause zero errors. Span error may also be caused by an inaccurately named span filter.

If the zero and span errors are due to a data recorder offset, both errors will be in the same direction and will be of the same magnitude.

## Transmissometer Dust Accumulation Check

The results of the dust accumulation check (blank 92) should not exceed 4% opacity. A dust accumulation value of more than 4% opacity indicates that the airflow of the purge system and/or the cleaning frequency of the optical surfaces are inadequate. When determining the optical surface dust accumulation, the auditor should note whether the effluent opacity is reasonably stable (within ±2% opacity) before and after cleaning the optical surfaces. If the effluent opacity is fluctuating by more than ±2%, the dust accumulation analysis should be omitted.

## Calibration Error Check

Calibration error results (blanks 81, 82, and 83) in excess of ±3% are indicative of a non-linear or miscalibrated instrument. However, the absolute calibration accuracy of the monitor can be determined only when the instrument clear-path zero setting is known. If the zero and span are out-of-specification, the calibration error data will often be biased in the same direction as the zero and span errors. Even if the zero and span data indicate that the COMS is calibrated properly, the monitor may still be inaccurate due to error in the clear-path zero setting. The optimum calibration procedure involves using neutral density filters during clear-stack or off-stack COMS calibration. This procedure would establish both the absolute calibration accuracy and linearity of the COMS. If this procedure is impractical, and it is reasonable to assume that the clear-path zero is correct, the monitor's calibration can be set using either the neutral density filters or the internal zero and span values.

## 5.3 THERMO ENVIRONMENTAL INSTRUMENTS, INC. MODEL D-R280 AV (DURAG)

The major components of the Model D-R280 AV opacity monitor were manufactured in Germany by Durag Industrie Electronik, GMBH. Thermo Environmental Instruments, Inc. imported the monitoring system components and acted as the U.S. distributor of the instrument. The most recent version of the D-R280 AV is the Enviroplan CEMOP-281. Audit procedures for the Enviroplan CEMOP-281 are covered in Section 6 of this document.

### 5.3.1 COMS Description

The Thermo Environmental Instruments D-R280 AV continuous opacity monitoring system (COMS) consists of four major components: the transmissometer, the terminal control box, the air-purging system, and the remote control unit and data acquisition equipment. The transmissometer component consists of an optical transmitter/ receiver (transceiver) unit mounted on one side of a stack or duct and a retroreflector unit mounted on the opposite side. The transceiver unit contains a light source, a photodiode detector, and the associated electronics. Figure 5-3 illustrates the general arrangement of the transceiver and retroreflector units on the stack. The transceiver uses a single-lamp, single-detector system to determine stack opacity. A chopper, located inside the optical compartment, modulates the light beam to eliminate interference from ambient light. The modulated beam is configured to alternately produce reference and measurement signals so that the effects of variations in the optical and electronic components of the COMS are minimized.

The terminal control box mounted beside the transceiver unit provides an on-stack analog readout of the milliamp output from the transceiver and can be used as a diagnostic tool.

The air purging system serves a threefold purpose: (1) it provides an air window to keep exposed optical surfaces clean; (2) it protects the optical surfaces from condensation of stack gas moisture; and (3) it minimizes thermal conduction from the stack to the instrument. A standard installation has one air-purging system for both the transceiver and the retroreflector units.

The remote control unit (Figure 5-4) converts the nonlinear transmittance output from the transceiver (a milliamp signal) into linear opacity corrected to stack exit conditions.

The opacity monitor measures the amount of light transmitted through the effluent from the transceiver to the retroreflector and back again. The monitor uses this double-pass transmittance to calculate the optical density of the effluent at the monitor location, or the "path" optical density. In order to provide stack exit opacity data, the path optical density must be corrected. The correction factor is expressed as the ratio of the stack exit inside diameter to the inside diameter of the stack or duct at the transmissometer location. This ratio is called the "optical path length correction factor." The following equations illustrate the re tionship between the optical path length correction factor, path optical density, and stack exit opacity.

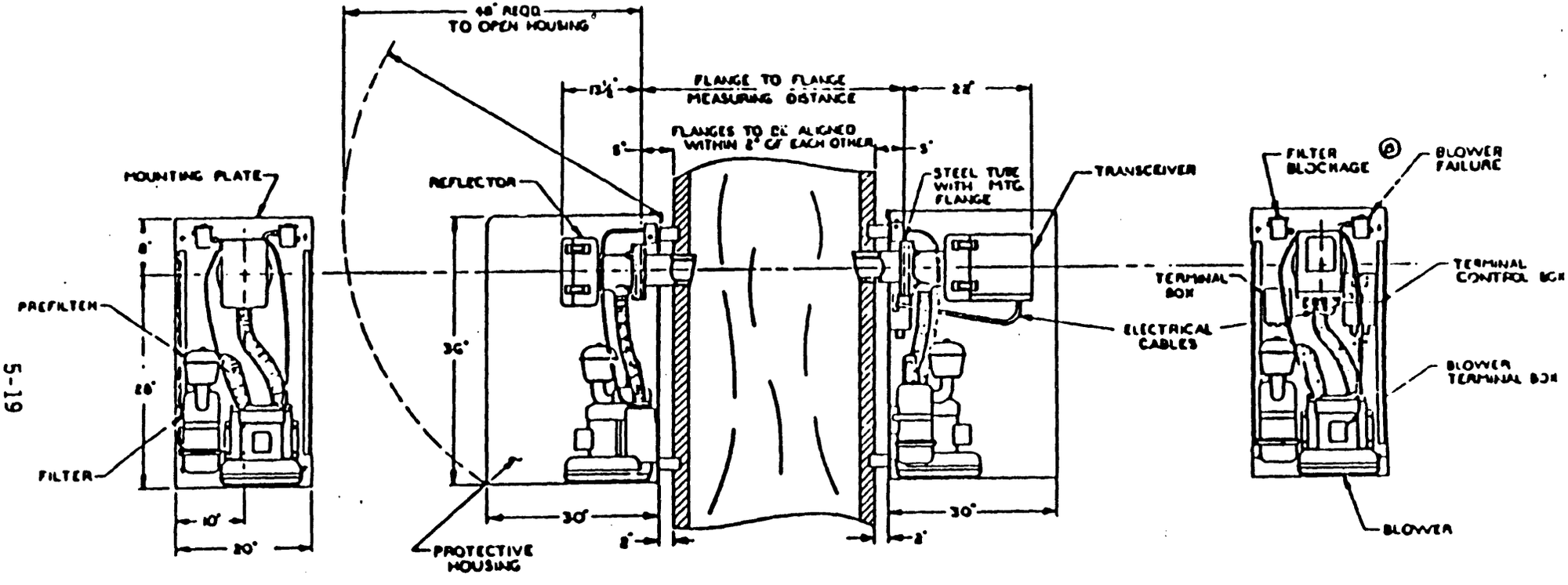


Figure 5-3. Thermo Environmental Instruments Model D-R280 AV Transmissometer.

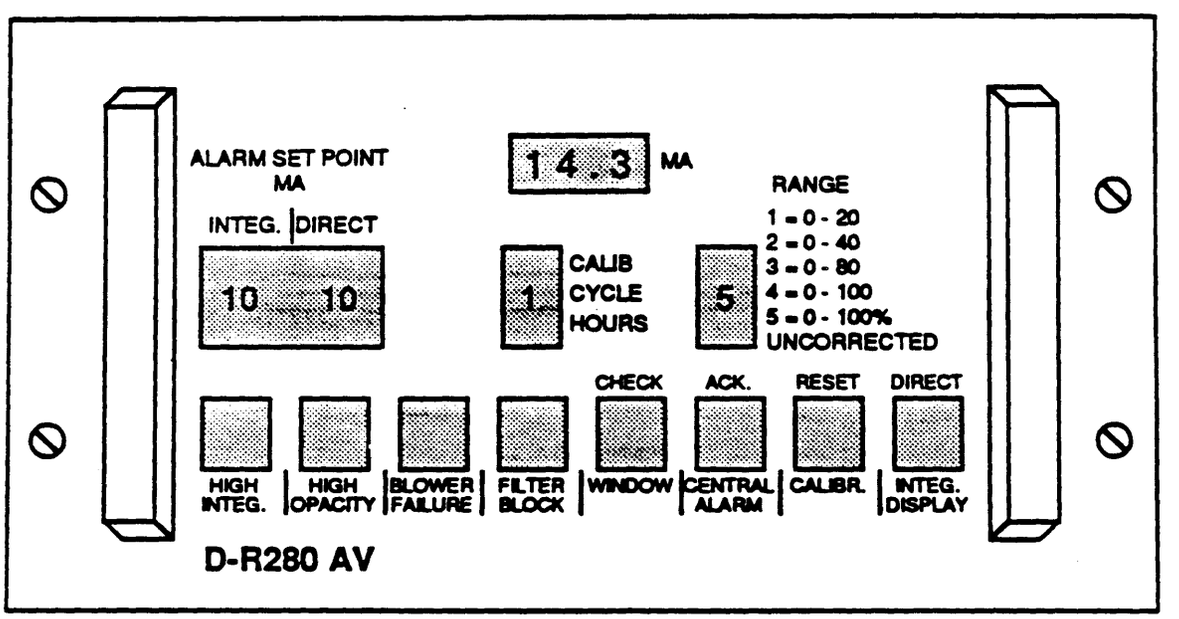


Figure 5-4. Thermo Environmental Instruments Model D-R280 AV Control Unit.

$L_x/L_t$ = optical path length correction factor

where: $L_x$ = stack exit inside diameter (ft)

$L_t$ = the stack or duct inside diameter at the transmissometer location (ft)

$$OP_x = \left[1 - 10^{-(L_x/L_t)(OD)}\right] \times 100$$

where: $OP_x$ = stack exit opacity (%)

OD = transmissometer optical density (path)

### 5.3.2 Performance Audit Procedures

Preliminary Data

1. Obtain the stack exit inside diameter and the inside diameter of the stack or duct at the transmissometer location. Record these values in blanks 1 and 2 of the D-R280 AV Performance Audit Data Sheet.

   Note: Effluent handling system dimensions may be acquired from the following sources listed in descending order of reliability: (1) physical measurements, (2) construction drawings, (3) opacity monitor installation/ certification documents, and (4) source personnel recollections.

2. Calculate the optical path length correction factor (divide the value in blank 1 by the value in blank 2). Record the result in blank 3.

3. Record the source-cited optical path length correction factor in blank 4.

   Note: The optical path length correction factor is preset by the manufacturer using information supplied by the source. The value recorded in blank 4 should be the value source personnel agree should be set inside the monitor. Typically, this value is cited from monitor installation data, monitor certification data, or from COMS service reports.

4. Obtain the reference zero and span calibration values. Record these values in blank 5 and blank 6, respectively.

   Note: The reference zero and span calibration values may not be the same as the values recorded during instrument installation and/or certification. The zero and span values recorded in blank 5 and blank 6 should be the reference values recorded during the most recent clear-path calibration of the COMS.

5. Inspect the opacity data recorder (strip chart or computer) to ensure proper operation. Annotate the data record with the auditor's name, affiliation, plant, unit, date, and time.

Fault Lamp Checks

The following steps describe the fault lamp analysis for the D-R280 AV remote control unit. Unless otherwise noted, the audit can continue with illuminated fault lamps, provided that the source has been informed of the fault conditions.

6. Record the status (ON or OFF) of the BLOWER FAILURE fault lamp in blank 7.

   Note: An illuminated BLOWER FAILURE fault lamp indicates a loss of power to the transceiver or to purge air blowers. If a blower failure fault is indicated, the audit should be postponed until source personnel repair the problem. Source personnel should be told of this fault immediately. Loss of purge air may damage the on-stack components of the COMS due to prolonged exposure to corrosive stack gases.

7. Record the status (ON or OFF) of the FILTER BLOCK fault lamp in blank 8.

   Note: An illuminated FILTER BLOCK fault lamp indicates that a reduction in purge air flow has been detected. The most likely causes of a filter block fault are a clogged purge air filter or a crimped purge air hose. The audit can continue under filter block conditions; however, source personnel should be made aware of the condition so that repairs can be made at the completion of the audit. (This fault lamp is not an indicator of dirt on the measurement window.)

8. Record the status (ON or OFF) of the WINDOW fault lamp in blank 9.

   Note: An illuminated WINDOW fault lamp indicates that the opacity of the measurement window exceeds the factory preset limit of 3 percent. When the Dirty Window Limit has been exceeded, the effluent opacity data may be biased high by dust on the transmissometer optics.

Control Unit Checks

9. Check the opacity COMS measurement range by examining the "RANGE" selector switch on the front panel of the control unit.

10. Record the position of the range switch in blank 10.

11. Set the opacity range switch to range position "4."

Reference Signal, Zero and Span Checks

12. Initiate the calibration cycle by pushing the CALIBR button on the control panel.

    Note: The green CALIBR lamp will light, and the monitor will automatically cycle through the internal and external zero and span modes.

13. Record in blank 11 the internal zero milliamp value displayed on the control panel.

Note: The internal zero checks the reference beam inside the transceiver. After two minutes in the internal zero mode, the monitor will automatically switch to the external zero mode.

14. Record the external zero value (in milliamps) displayed on the panel meter in blank 12. Record the zero value (in percent opacity) displayed on the opacity data recorder in blank 13.

    Note: During the zero calibration check, the zero mirror is moved into the path of the measurement beam by a servomotor. The zero mechanism is designed to present the transceiver with a simulated clear-path condition. The daily zero check does not test the actual clear-path zero, nor does it provide a check of cross-stack parameters such as the optical alignment of the transmissometer or drift in the reflectance of the retroreflector. The actual clear-path zero can only be checked during clear-stack or off-stack calibration the COMS. In addition to simulating the instrument clear-path zero, the zero mechanism allows the amount of dust on the transceiver optics (primary lens and zero mirror) to be quantified. After two minutes in the external zero mode, the COMS will automatically enter the span mode.

15. Record in blank 14 the span value (in milliamps) displayed on the control unit panel meter. Record the span value (in percent opacity) displayed on the data recorder in blank 15. Go to the transmissometer location.

    Note: During the span calibration check, a servomotor moves a span filter into the path of the measurement beam while the zero mirror is in place. The span mechanism is designed to provide an indication of the upscale accuracy of the COMS relative to the simulated clear-path zero. The COMS automatically returns to the measurement mode when the span portion of the calibration cycle is complete.

Retroreflector Dust Accumulation Check

16. Record the effluent opacity prior to cleaning the retroreflector optics in blank 16.

17. Open the transceiver housing, inspect and clean the retroreflector optics, and close the housing.

18. Record the post-cleaning effluent opacity in blank 17. Go to the transceiver location.

Transceiver Dust Accumulation Check

19. Record the pre-cleaning effluent opacity in blank 18.

20. Open the transceiver head, clean the optics (primary lens and zero mirror), and close the transceiver head.

21. Record the post-cleaning effluent opacity in blank 19.

## Optical Alignment Check

22. Determine the optical alignment by looking through the bull's eye on the side of the transceiver.

23. Observe whether the twin images are centered on either side of the cross hairs and record this information (YES or NO) in blank 20.

    Note: The type of image that will appear in the alignment sight will depend on the type of reflector installed in the retroreflector housing. The Scotch-lite Type F reflector (flange-to-flange distance = 1.5 to 10 feet) will produce twin overlapping circles in the alignment sight. The glass corner cube reflector (flange-to-flange distance = 9 to 49 feet) will produce smaller discrete twin circular images in the alignment sight. The optical alignment has no affect on the internal checks of the instrument or the calibration error determination; however, if the instrument is misaligned, the effluent opacity data will be biased high since a portion of the measurement beam will be misdirected before it is returned to the measurement detector.

## Calibration Error Check

The calibration error check is performed using three neutral density filters and an audit device called an audit jig. When installed on the transmissometer, the audit jig intercepts the measurement light beam and returns it directly to the measurement detector. Performing the calibration error check on-stack using the audit jig and filters determines the linearity of the instrument response relative to the current clear-path zero setting. This calibration error check does not determine the accuracy of the actual instrument clear-path zero setting or the status of any cross-stack parameters. A true calibration error check is performed by moving the on-stack components to a location with minimal ambient opacity, making sure that the proper path length and alignments are attained, and then placing the calibration filters in the measurement path.

24. Install the audit jig.

25. Adjust the audit jig iris to produce a 4 mA output current on the junction box meter (see Figure 5-5). This adjustment simulates the COMS clear-path zero setting.

    Note: The junction box meter allows the auditor to get the jig zero value near the zero value displayed on the data recorder. The final jig zero adjustments should be based on readings from the data recorder. The jig zero does not have to be exactly 0% opacity since the audit filter correction equations can account for an offset in the jig zero. A jig zero value in the range of 0-2% opacity is acceptable.

27. Record the audit filter serial numbers and opacity values in blanks 22, 23, and 24.

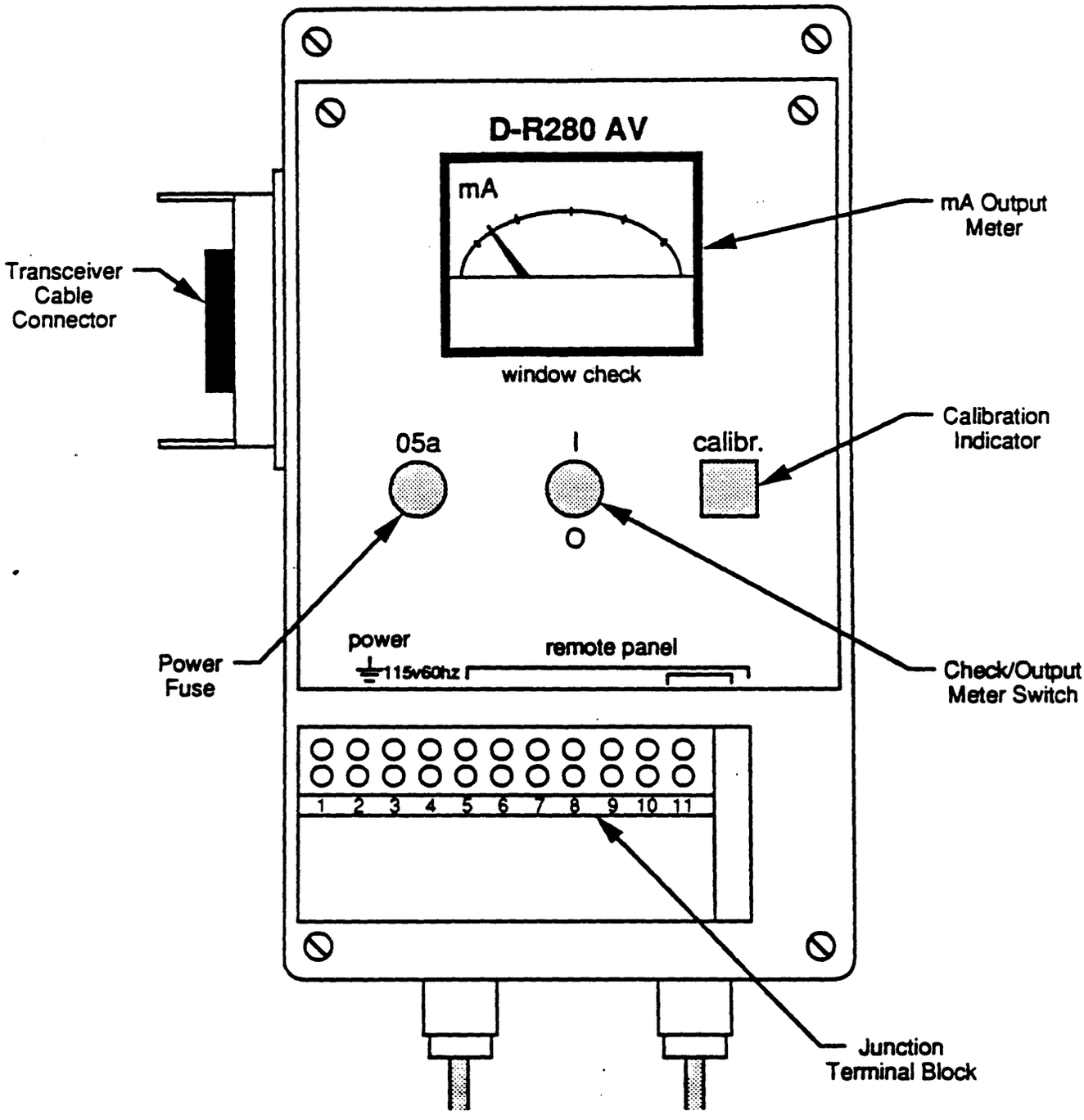


Figure 5-5. Thermo Environmental Instruments Model D-R280 AV Junction Box (J-Box).

28. Remove the filters from their protective covers, inspect, and, if necessary, clean them.

29. Record the jig zero value from the data recorder in blank 21.

    Note: The acquisition of monitor responses from the data recorder requires communication between the auditor at the transmissometer location and an assistant at the data recorder location.

30. Insert the low range neutral density filter into the audit jig.

31. Wait approximately two minutes or until a clear value has been recorded and displayed on the data recorder.

    Note: The audit data should be taken from a data recording/reporting device that presents instantaneous opacity (or opacity data with the shortest available integration period).

32. Record the COMS response to the low range neutral density filter.

33. Remove the low range filter from the audit jig and insert the mid range neutral density filter.

34. Wait approximately two minutes and record the COMS response to the mid range neutral density filter.

35. Remove the mid range filter from the audit jig and insert the high range filter.

36. Wait approximately two minutes and record the COMS response to the high range neutral density filter.

37. Remove the high range filter, wait approximately two minutes, and record the jig zero value.

    Note: If the final jig zero value differs from the initial value by more than 1% opacity, the jig zero should be adjusted to agree with the initial value and the three-filter run (i.e., low, mid, and high) should be repeated.

38. Repeat steps 30 through 37 until a total of five opacity readings are obtained for each neutral density filter.

39. If six-minute integrated opacity data are recorded, repeat steps 29 through 37 once more, changing the waiting periods to 13 minutes.

40. Record the six-minute integrated data.

    Note: In order to acquire valid six-minute averaged opacity data, each filter must remain in the jig for at least two consecutive six-minute periods; the first period will be invalid because it was in progress when the filter was inserted. A waiting period of 13 minutes is recommended.

41. When the calibration error check is complete, remove the audit jig. Close the transceiver head and the weather cover, and return to the COMS control unit.

Final Control Unit Adjustment Reset

42. Reset the opacity range switch to the position recorded in Blank 10.

43. Obtain a copy of the audit data from the data recorder.

44. Transcribe the calibration error data from the data recorder to blanks 25 through 50 of the audit data form and complete the audit data calculations.

### 5.3.3 Interpretation of Audit Results

This section is designed to help the auditor interpret the Model D-R280 AV performance audit results. A general discussion of performance audit results is presented in Section 2 of this manual.

Stack Exit Correlation Error Check

The path length correction error in blank 51 should be within ±2%. This error exponentially affects the opacity readings, resulting in over- or underestimation of the stack exit opacity. The most common error in computing the optical path length correction factor is the use of the flange-to-flange distance in place of the stack/duct inside diameter at the monitor location. This error will result in underestimation of the stack exit opacity and can be identified by comparing the monitor optical path length to the flange-to-flange distance. The flange-to-flange distance should be greater by approximately two to four feet.

Fault Lamp Analysis

Fault lamps are typically associated with parameters that the monitor manufacturer feels are critical to COMS function and to the collection of valid opacity data. The parameters associated with each of the fault lamps are discussed in the audit procedures. With the exception of lamps that warn of elevated opacity levels (alarm or warning lamps), an illuminated fault lamp indicates that the COMS is not functioning properly.

Control Panel Meter Error (Optional)

The accuracy of the control panel meter is important at sources using the meter during monitor adjustment and calibration. The accuracy of the control unit panel meter (blank 52 and blank 54) is determined by comparing the zero and span reference values to the panel meter output recorded during the COMS calibration check. Errors in the control panel meter should not affect the opacity data reported by the monitoring system unless the control panel meter is used to adjust the calibration of the COMS. At sources using the panel meter data, the panel meter should be adjusted so that the error is less than 2%. Since the control panel meter error is determined using the span filter, any

change in the specified values for the span filter will cause an erroneous assessment of the control panel meter errors. Each time the monitor is thoroughly calibrated, the internal span filter should be renamed. The new span value should be recorded and used in all subsequent adjustments.

Zero and Span Check

The D-R280 AV internal zero (blank 11) should be set to indicate 0% opacity (equivalent to 3.7 - 4.3 mA). An external zero error (blank 53) greater than 4% opacity is usually due to excessive dust accumulation on the optical surfaces, electronic drift, or an electronic/mechanical offset of the data recorder. Excessive dust on the optical surfaces sufficient to cause a significant zero error would be indicated by the difference in the internal and external zero values and/or an illuminated "window" fault lamp. Instrument span error (blank 55) may be caused by the same problems that cause zero errors. A span error may also be caused by an inaccurately named span filter.

If the zero and span errors are due to a data recorder offset, both errors will be in the same direction and will be of the same magnitude.

The external zero displayed on the panel meter of the control unit is an indication of the amount of dust deposition on the zero mirror and the transceiver exit window. The difference between the internal and external zero values should equal the amount of dust found on the transceiver optics (blank 57). To convert the zero responses to a value that represents the lens dusting in percent opacity, use the following equation:

Meter response in % opacity = 6.25 [(Blank 12) - (Blank 11)]

Transmissometer Dust Accumulation Check

The results of the dust accumulation check (blank 58) should not exceed 4% opacity. A dust accumulation value of more than 4% opacity indicates that the airflow of the purge system and/or the cleaning frequency of the optical surfaces are inadequate. When determining the optical surface dust accumulation, the auditor should note whether the effluent opacity is reasonably stable (within ±2% opacity) before and after cleaning the optical surfaces. If the effluent opacity is fluctuating by more than ±2%, the dust accumulation analysis should be omitted.

Optical Alignment Check

When the transceiver and retroreflector are misaligned, a portion of the measurement beam that should be returned to the measurement detector is misdirected, resulting in a positive bias in the data reported by the COMS. One of the most common causes of misalignment is vibration which may cause the on-stack components to shift slightly on the instrument mounting flanges. Another common cause of misalignment is thermal expansion and contraction of the structure on which the transmissometer is mounted. If the COMS is being audited while the unit is off-line (cold stack), the results of the alignment analysis may not be representative of the alignment of the instrument when the stack or duct is at normal operating temperature.

Calibration Error Check

Calibration error results (blanks 68, 69, and 70) in excess of ±3% are indicative of a non-linear or miscalibrated instrument. However, the absolute calibration accuracy of the monitor can be determined only when the instrument clear-path zero setting is known. If the zero and span data are out-of-specification, the calibration error data will often be biased in the direction of the zero and span errors. Even if the zero and span data indicate that the COMS is calibrated properly, the monitor may still be inaccurate due to error in the clear-path zero adjustment. The optimum calibration procedure involves using neutral density filters during clear-stack or off-stack COMS calibration. This procedure would establish both the absolute calibration accuracy and linearity of the COMS. If this procedure is impractical, and it is reasonable to assume that the clear-path zero is set correctly, the monitor's calibration can be set on-stack using either the neutral density filters or the internal zero and span values.

# SECTION 6

# PERFORMANCE AUDIT PROCEDURES FOR THE ENVIROPLAN OPACITY MONITOR

## 6.1 ENVIROPLAN MODEL CEMOP-281

The Enviroplan CEMOP-281 is an updated version of the D-R280AV formerly distributed by Thermo Environmental Instruments, Inc. Audit procedures for the D-R280AV are covered in Section 5 of this manual. Both instruments are manufactured by Durag.

### 6.1.1 COMS Description

The Enviroplan CEMOP-281 continuous opacity monitoring system (COMS) consists of four major components: the transmissometer, the terminal control box, the air-purging system, and the remote control unit and data acquisition equipment. The transmissometer component consists of an optical transmitter/receiver (transceiver) unit mounted on one side of a stack or duct and a retroreflector unit mounted on the opposite side. The transceiver unit contains the light source, the photodiode detector, and the associated electronics. Figure 6-1 illustrates the general arrangement of the transceiver and retroreflector units on the stack. The transceiver uses a single-lamp, single-detector system to determine effluent opacity. A chopper, located inside the optical compartment, modulates the light beam to eliminate interference from ambient light. The modulated beam is configured to alternately produce reference and measurement signals so that the effects of variations in the optical and electronic components of the COMS are minimized.

The terminal control box mounted beside the transceiver unit provides an on-stack analog readout of the milliamp output from the transceiver and can be used as a diagnostic tool.

The air purging system serves a threefold purpose: (1) it provides an air window to keep exposed optical surfaces clean; (2) it protects the optical surfaces from condensation of stack gas moisture; and (3) it minimizes thermal conduction from the stack to the instrument. A standard installation has one air-purging system for both the transceiver and the retroreflector units.

The remote control unit (Figure 6-2) converts the nonlinear transmittance output from the transceiver (a milliamp signal) into linear opacity corrected to stack exit conditions.

The opacity monitor measures the amount of light transmitted through the effluent from the transceiver to the retroreflector and back again. The control unit uses the effluent transmittance to calculate the optical density of the effluent at the monitor location, or the "path" optical density. In order to provide stack exit opacity data, the path optical density must be corrected. The correction factor is expressed as the ratio of the stack exit inside diameter to the inside diameter of the stack at the

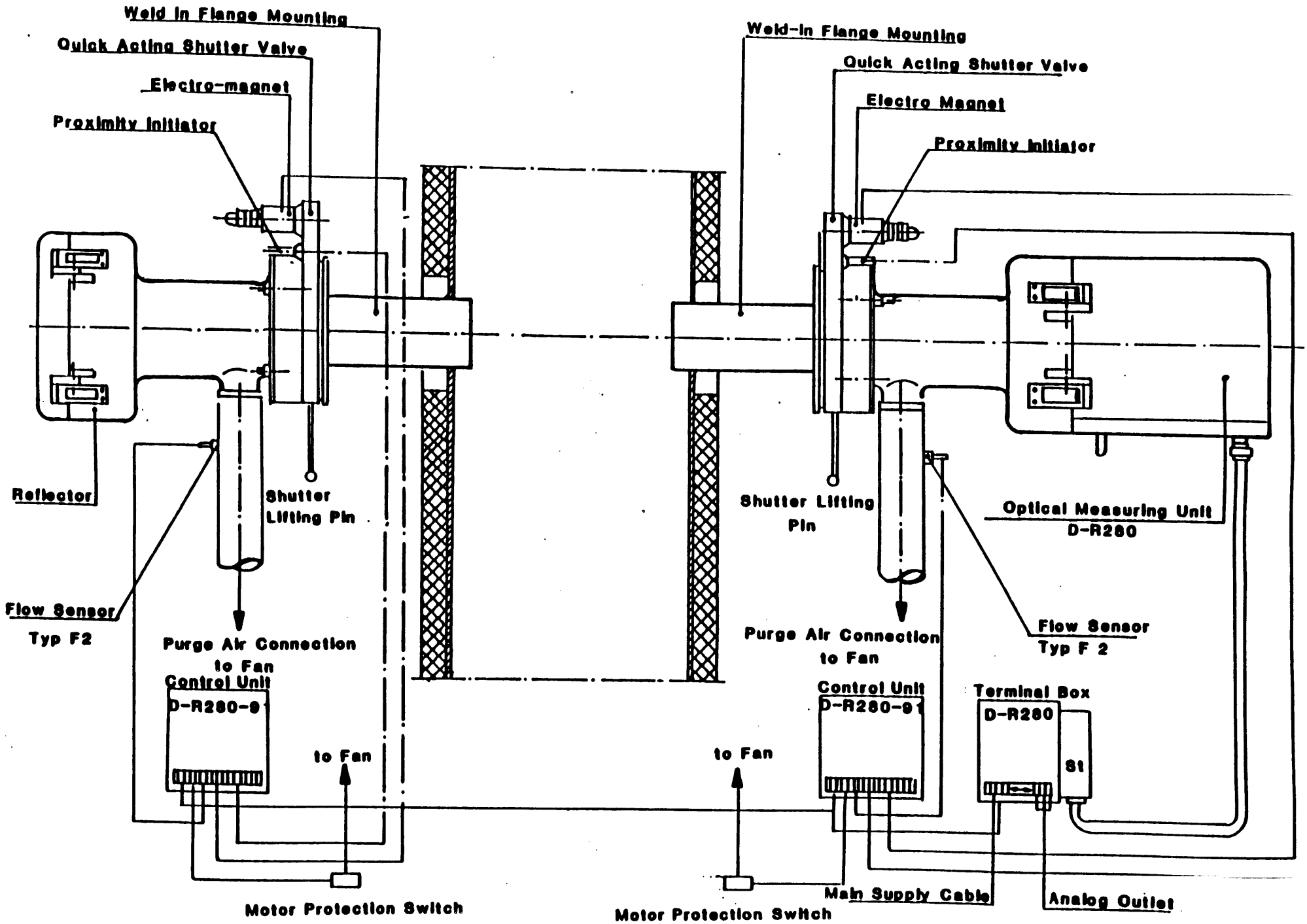


Figure 6-1. Enviroplan CEMOP-281 Transmissometer.

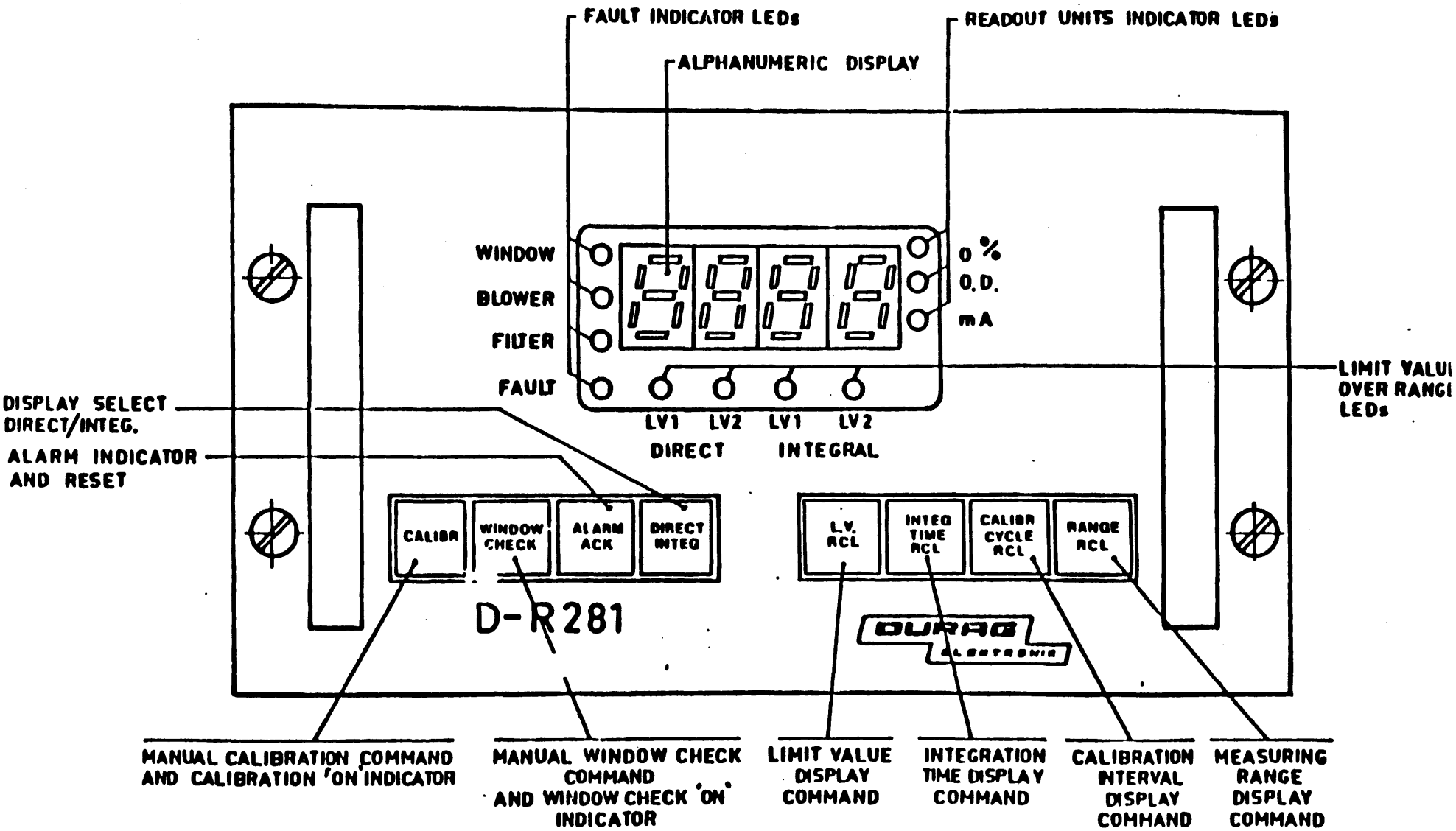


Figure 6-2. Enviroplan CEMOP-281 Control Unit.

transmissometer location. This ratio is called the "stack correction factor" (SCF) by Enviroplan. The following equations illustrate the relationship between this ratio, path optical density, and stack exit opacity.

$$L_x/L_t = \text{stack correction factor}$$

where: $L_x$ = stack exit inside diameter (ft)

$L_t$ = the stack inside diameter (or the duct width) at the monitor location (ft)

$$OP_x = \left[1 - 10^{-(Lx/Lt)(OD)}\right] \times 100$$

where: $OP_x$ = stack exit opacity (%)

OD = transmissometer optical density (path)

6.1.2 Performance Audit Procedures

Preliminary Data

1. Obtain the stack exit inside diameter and the stack or duct inside diameter or width at the monitor location. Record these values in blanks 1 and 2 of the Enviroplan CEMOP-281 Performance Audit Data Sheet.

   Note: Effluent handling system dimensions may be acquired from the following sources listed in descending order of reliability: (1) physical measurements, (2) construction drawings, (3) opacity monitor installation/ certification documents, and (4) source personnel recollections.

2. Calculate the stack correction factor (divide the value in blank 1 by the value in blank 2). Record the result in blank 3.

3. Record the source-cited stack correction factor in blank 4.

   Note: The stack correction factor is preset by the manufacturer using information supplied by the source. The value recorded in blank 4 should be the value source personnel agree should be set inside the monitor. The stack correction factor setting can be verified by opening the control unit and checking the positions of switches 42 through 49 on circuit board 40 against information supplied in the CEMOP-281 instrument manual. This operation should only be attempted by qualified personnel.

4. Obtain the reference zero and span calibration values. Record these values in blank 5 and blank 6, respectively.

Note: The reference zero and span calibration values may not be the same as the values recorded during instrument installation and/or certification. The zero and span values recorded in blank 5 and blank 6 should be the reference values recorded during the most recent clear-path calibration of the COMS.

5. Inspect the opacity data recorder (strip chart or computer) to ensure proper operation. Annotate the data record with the auditor's name, affiliation, plant, unit, date, and time.

Fault Lamp Checks

The following steps describe the fault lamp analysis for the Enviroplan CEMOP-281 remote control unit. Unless otherwise noted, the audit can continue with illuminated fault lamps, provided the source has been informed of the fault conditions.

6. Record the status (ON or OFF) of the BLOWER fault lamp in blank 7.

   Note: An illuminated BLOWER fault lamp indicates a loss of power to the purge air blowers. If a blower fault is indicated, the audit should be postponed until source personnel repair the problem. Source personnel should be told of this fault immediately. Loss of purge air may damage the on-stack components of the COMS due to prolonged exposure to corrosive stack gases.

7. Record the status (ON or OFF) of the FILTER fault lamp in blank 8.

   Note: An illuminated FILTER fault lamp indicates that a reduction in purge air flow has been detected. The most likely causes of a filter fault are a clogged purge air filter or a crimped purge air hose. The audit can continue under filter block conditions; however, source personnel should be made aware of the condition so that repairs can be made at the completion of the audit.

8. Record the status (ON or OFF) of the WINDOW fault lamp in blank 9.

   Note: An illuminated WINDOW fault lamp indicates that the opacity of the measurement window exceeds the factory preset limit of 3.5 percent. Excessive window opacity may produce a positive bias in the effluent opacity data.

9. Record the status (On or Off) of the FAULT lamp in blank 10.

   Note: An illuminated FAULT lamp indicates that one or more critical COMS components have malfunctioned or are out of adjustment. An illuminated FAULT lamp should be accompanied by a fault code displayed on the front panel meter of the control unit. The nature of the fault can then be determined by consulting the instrument manual. If this lamp is illuminated, source personnel should determine the exact cause of the fault condition. The auditor should discuss the cause and magnitude of the fault condition with source personnel to determine if the audit can continue.

Instrument Range Check

10. Check the COMS measurement range by pressing the RANGE button on the front panel of the control unit.

11. Record the instrument range in blank 11.

    Note: If the instrument image is not greater than the highest corrected neutral density filter value to be used during the calibration error portion of the audit, the instrument range must be increased by manipulating Switch S51 on circuit board no. 50. This operation should only be attempted by qualified personnel.

Reference Signal, Zero and Span Checks

12. Initiate the calibration cycle by pushing the CALIBR button.

    Note: The green CALIBR lamp will light, and the monitor will automatically cycle through the internal and external zero and span modes.

13. Record the internal zero milliamp value displayed on the control panel in blank 12.

    Note: The internal zero checks the instrument reference signal. Since the instrument provides a full scale output of 4 to 20 milliamps, a value of 4 milliamps displayed on the control unit panel meter represents a zero condition. After two minutes in the internal zero mode, the monitor will automatically switch to the external zero mode.

14. Record the external zero value (in milliamps) displayed on the control unit panel meter in blank 13. Record the external zero value (in percent opacity) displayed on the opacity data recorder in blank 14.

    Note: During the zero calibration check, the zero mirror is moved into the path of the measurement beam by a servomotor. The zero mechanism is designed to present the transceiver with a simulated clear-path condition. The daily zero check does not test the actual clear-path zero, nor does it provide a check of cross-stack parameters such as the optical alignment of the transmissometer or drift in the reflectance of the retroreflector. The actual clear-path zero can only be checked during clear-stack or off-stack calibration of the COMS. In addition to simulating the instrument clear-path zero, the zero mechanism allows the amount of dust on the transceiver optics (primary lens and zero mirror ) to be quantified. After two minutes in the external zero mode, the COMS will automatically enter the span mode.

15. Record in blank 15 the span value (in milliamps) displayed on the control unit panel meter. Record the span value (in percent opacity) displayed on the data recorder in blank 16. Go to the transmissometer location.

Note: During the span calibration check, a servomotor moves a span filter into the path of the measurement beam while the zero mirror is in place. The span mechanism is designed to provide an indication of the upscale accuracy of the COMS relative to the simulated clear-path zero. The COMS automatically returns to the measurement mode when the span portion of the calibration cycle is complete.

Retroreflector Dust Accumulation Check

16. Record the effluent opacity prior to cleaning the retroreflector optics in blank 17.

17. Open the transceiver housing, inspect and clean the retroreflector optics, and close the housing.

18. Record the post-cleaning effluent opacity in blank 18. Go to the transceiver location.

Transceiver Dust Accumulation Check

19. Record the pre-cleaning effluent opacity in blank 19.

20. Open the transceiver, clean the optics (primary lens and zero mirror), and close the transceiver.

21. Record the post-cleaning effluent opacity in blank 20.

Alignment Check

22. Determine the monitor alignment by looking through the alignment port on the side of the transceiver.

23. Observe whether the twin images are centered on either side of the cross hairs and record this information (YES or NO) in blank 21.

Note: The type of image that will appear in the alignment sight will depend on the type of reflector installed in the retroreflector housing. The Scotch-lite Type F reflector (flange-to-flange distance = 1.5 to 10 feet) will produce twin overlapping circles in the alignment sight. The glass corner cube reflector (flange-to-flange distance = 9 to 49 feet) will produce smaller discrete twin circular images in the alignment sight. The alignment has no effect on the internal checks of the instrument or the calibration error determination; however, if the instrument is misaligned, the effluent opacity data will be biased high since a portion of the measurement beam will be misdirected before it is returned to the measurement detector.

Calibration Error Check

The calibration error check is performed using three neutral density filters and an audit device called an audit jig. When installed on the transmissometer, the audit jig returns the measurement light beam directly

to the measurement detector. Performing the calibration error check on-stack using the audit jig and filters determines the linearity of the instrument response relative to the current clear-path zero setting. This calibration error check does not determine the accuracy of the actual instrument clear-path zero or the status of any cross-stack parameters. A true calibration error check is performed by moving the on-stack components to a location with minimal ambient opacity, making sure that the proper path length and alignments are attained, and then placing the calibration filters in the measurement path.

24. Install the audit jig.

25. Adjust the audit jig iris to produce a 4 mA output current on the junction box meter (see Section 5, Figure 5-5). This adjustment simulates the instrument clear-path zero setting.

    Note: The junction box meter allows the auditor to get the jig zero value near the zero value displayed on the data recorder. The final jig zero adjustments should be based on readings from the data recorder. The jig zero does not have to be exactly 0% opacity since the audit filter correction equations can account for an offset in the jig zero. A jig zero value in the range of 0-2% opacity is acceptable.

26. Record the audit filter serial numbers and opacity values in blanks 22, 23 and 24.

27. Remove the filters from their protective covers, inspect, and, if necessary, clean them.

28. Record the jig zero value from the data recorder.

    Note: The acquisition of COMS data from the data recorder requires communication between the auditor at the transmissometer location and an assistant at the data recorder location.

29. Insert the low range neutral density filter into the audit jig.

30. Wait approximately two minutes or until a clear value has been recorded and displayed on the data recorder.

    Note: The audit data should be taken from a data recording/reporting device that presents instantaneous opacity (or opacity data with the shortest available integration period).

31. Record the COMS response to the low range neutral density filter.

32. Remove the low range filter from the audit jig and insert the mid range neutral density filter.

33. Wait approximately two minutes and record the COMS response to the mid range neutral density filter.

34. Remove the mid range filter from the audit jig and insert the high range filter.

35. Wait approximately two minutes and record the COMS response to the high range neutral density filter.

36. Remove the high range filter, wait approximately two minutes, and record the jig zero value.

    Note: If the final jig zero value differs from the initial value by more than 1% opacity, the jig zero should be adjusted to agree with the initial value and the three-filter run (i.e., low, mid, and high) should be repeated.

37. Repeat steps 29 through 36 until a total of five opacity readings are obtained for each neutral density filter.

38. If six-minute integrated opacity data are recorded, repeat steps 28 through 36 once more, changing the waiting periods to 13 minutes.

39. Record the six-minute integrated data.

    Note: In order to acquire valid six-minute averaged opacity data, each filter must remain in the jig for at least two consecutive six-minute periods; the first period will be invalid because it was in progress when the filter was inserted. A waiting period of 13 minutes is recommended.

40. When the calibration error check is complete, remove the audit jig. Close the transceiver head and the weather cover, and return to the COMS control unit.

Final Control Unit Adjustment Reset

41. Return to the control unit location and reset the opacity instrument range to its original setting (Blank 11), if necessary.

42. Obtain a copy of the audit data from the data recorder

43. Transcribe the calibration error response data from the data recorder to blanks 25 through 50 of the audit data form and complete the audit data calculations.

### 6.1.3 Interpretation of Audit Results

This section is designed to help the auditor interpret the CEMOP-281 performance audit results. A general discussion of performance audit results is presented in Section 2 of this manual.

## Stack Exit Correlation Error Check

The path length correction error in blank 51 should be within ±2%. This error exponentially affects the opacity readings, resulting in over- or underestimation of the stack exit opacity. The most common error in computing the optical path length correction factor is the use of the flange-to-flange distance in place of the stack/duct inside diameter at the monitor location. This error will result in underestimation of the stack exit opacity and can be identified by comparing the monitor optical path length to the flange-to-flange distance; the flange-to-flange distance should be greater by approximately two to four feet.

## Fault Lamp Analysis

Fault lamps are typically associated with parameters that the monitor manufacturer feels are critical to COMS function, and to the collection of valid opacity data. The parameters associated with each of the fault lamps is discussed in the audit procedures. With the exception of lamps that warn of elevated opacity levels (alarm or warning lamps), an illuminated fault lamp indicates that the COMS is not functioning properly.

## Control Panel Meter Error (Optional)

The accuracy of the control panel meter is important at sources using the meter during monitor adjustment and calibration. The accuracy of the control panel meter (blank 52 and blank 54) is determined by comparing the zero and span reference values to the panel meter output recorded during the COMS calibration check. Errors in the control panel meter should not affect the opacity data reported by the monitoring system unless the control panel meter is used to calibrate the COMS. At sources using the panel meter data, the panel meter should be adjusted so that the error is less than 2%. Since the control panel meter error is determined using the span filter, any change in the specified values for the span filter will cause an erroneous assessment of the control panel meter errors. Each time the monitor is thoroughly calibrated, the internal span filter should be renamed. The new span value should be recorded and used in all subsequent adjustments.

## Zero and Span Checks

The CEMOP-281 internal zero (blank 12) should be set to indicate 0% opacity (equivalent to 3.7 - 4.3mA). An external zero error (blank 53) greater than 4% opacity is usually due to excessive dust accumulation on the optical surfaces, electronic drift, or an electronic/mechanical offset of the data recorder. Excessive dust on the optical surfaces sufficient to cause a significant zero error would be indicated by the difference in the internal and external zero values and/or an illuminated "window" fault lamp. Instrument span error (blank 55) may be caused by the same problems that cause zero errors and may be identified in a similar fashion. A span error may also be caused by an inaccurately named span filter.

If the zero and span errors are due to a data recorder offset, both errors will be in the same direction and will be of the same magnitude.

The external zero displayed on the control unit panel meter also indicates the level of dust accumulation on the zero retroreflector and transceiver measurement window. The difference between the internal and external zero responses should equal the amount of dust found on the transceiver optics (blank 57). To convert the zero responses to a value that represents lens dusting in percent opacity, use the following equation:

Meter response in % opacity = 6.25 [(Blank 13) - (Blank 12)]

## Transmissometer Dust Accumulation Check

The results of the dust accumulation check (blank 58) should not exceed 4%. A dust accumulation value of more than 4% opacity indicates that the airflow of the purge system and/or the cleaning frequency of the optical surfaces are inadequate. When determining the optical surface dust accumulation, the auditor should note whether the effluent opacity is relatively stable (within ±2% opacity) before and after cleaning the optical surfaces. If the effluent opacity is fluctuating by more than ±2%, the dust accumulation analysis should be omitted.

## Optical Alignment Check

When the transceiver and retroreflector are misaligned, a portion of the measurement beam that should be returned to the measurement detector is misdirected, resulting in a positive bias in the data reported by the COMS. One of the most common causes of misalignment is vibration which may cause the on-stack components to shift slightly on the instrument mounting flanges. Another common cause of misalignment is thermal expansion and contraction of the structure on which the transmissometer is mounted. If the COMS is being audited while the unit is off-line (cold stack), the results of the alignment analysis may not be representative of the alignment of the instrument when the stack or duct is at normal operating temperature.

## Calibration Error Check

Calibration error results (blanks 68, 69, and 70) in excess of ±3% are indicative of a non-linear or miscalibrated instrument. However, the absolute calibration accuracy of the monitor can be determined only when the instrument clear-path zero value is known. If the zero and span data are out-of-specification, the calibration error data will often be biased in the direction of the zero and span errors. Even if the zero and span data indicate that the COMS is calibrated properly, the monitor may still be inaccurate due to error in the clear-path zero adjustment. The optimum calibration procedure involves using neutral density filters during clear-stack or off-stack COMS calibration. This procedure would establish both the absolute calibration accuracy and linearity of the COMS. If this procedure is impractical, and it is reasonable to assume that the clear-path zero is set correctly, the monitor's calibration can be set using either the neutral density filters or the internal zero and span values.

# SECTION 7

## PERFORMANCE AUDIT PROCEDURES FOR THE UNITED SCIENCES, INC. OPACITY MONITOR

## 7.1 UNITED SCIENCES, INC. MODEL 500C OPACITY MONITOR

### 7.1.1 COMS Description

The United Sciences Inc. (USI) Model 500C continuous opacity monitoring system (COMS) consists of three major components: the transmissometer, the air purging system, and the digital control unit. The transmissometer unit consists of a transceiver mounted on one side of the stack or duct and a retroreflector mounted on the opposite side (see Figure 7-1). The retroreflector is a passive unit designed to return the measurement light beam to the transceiver. The transceiver contains the light source, the optical bench, the reference and measurement detectors, and the essential on-stack electronics. The Model 500C uses a dual-pass, dual detector measurement technique. A green solid state light emitting diode (LED) is used as the light source. The LED is modulated to allow the instrument to differentiate between the measurement beam and ambient light. Light produced by the LED passes to a 50/50 beam splitter which sends half of the light to the reference detector to produce the reference signal. The remaining light (the measurement beam) is focused across the stack or duct to the retroreflector. The retroreflector returns the measurement beam to the measurement detector in the transceiver to produce the measurement signal. The transceiver electronics process the reference and measurement signals into a 0 to 20mA output which represents double-pass opacity. A second beam splitter in the transceiver housing allows an image of the measurement beam to be viewed through the alignment site on the back of the unit. The transceiver and retroreflector are properly aligned when the inner circle of the alignment reticle is within the circular image of the open retroreflector port. A three segmented rotating calibration wheel on the front of the transceiver allows the instrument to continuously cycle through zero, span, and measurement modes. Two differentially reflective surfaces make up the zero and span segments of the calibration wheel. The measurement segment of the calibration wheel is open to allow the measurement beam to pass through the effluent.

An on-stack indication of the transceiver output is displayed on an analogue meter in the Model 500C junction box. This 8 x 10-inch box is generally mounted on the transceiver unit blower plate. The junction box also contains "on/off" and "run/test" switches. The "on/off" switch controls power to the transceiver. The "run/test" switch is used to start and stop the rotation of the calibration wheel.

The primary component of the purge-air system is an electric blower that floods the cavity within the instrument mounting flange with filtered ambient air. The air purging system serves a threefold purpose: (1) it keeps the transmissometer protective optics clean by providing a filtered air buffer

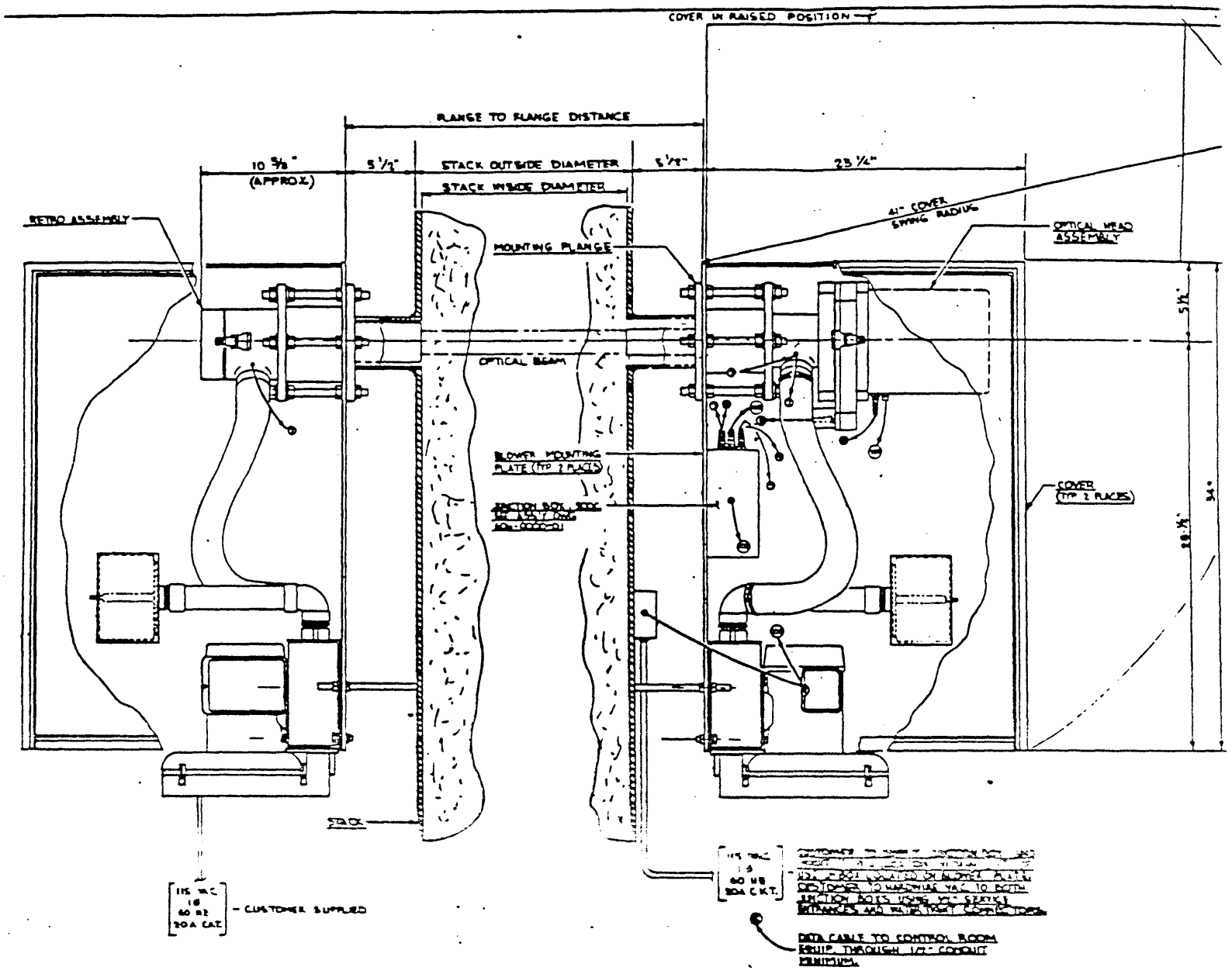


Figure 7-1. United Sciences, Inc. Model 500C Transmissometer.

between the protective optics and the effluent; (2) it keeps the protective optics from accumulating condensed stack gas moisture; and (3) it minimizes thermal conduction from the stack to the instrument. A standard installation has separate purge-air systems for the transceiver and retroreflector units.

The Model 500C control unit converts the transceiver output to stack exit opacity, controls the automatic daily calibration cycles, and performs several self-diagnostic functions (see Figure 7-2). Effluent opacity values are displayed on two digital front panel meters. The meter on the right displays instantaneous effluent opacity; it updates every four seconds. The meter on the left displays integrated effluent opacity values; it updates at the end of each integration period. Several indicator lamps on the front panel of the control unit provide information regarding the status of the COMS. The operation of the fault indicator lamps may be checked using a lamp test switch. Calibration data can be output manually to the front panel meter of the control unit by positioning the "MODE" switch in either the "ZERO" or the "SPAN" position. The mode switch does not affect the output from the control unit to the data recording device(s).

The Model 500C opacity monitor measures the amount of light transmitted through the effluent from the transceiver to the retroreflector and back again. The monitor uses this double-pass transmittance to calculate the optical density of the effluent at the monitor location, or the "path" optical density. To provide stack exit opacity data, the path optical density must be corrected to stack exit conditions. The correction factor is expressed as the ratio of the stack exit inside diameter to the inside diameter of the stack or duct at the monitor location. This ratio is called the stack taper ratio (STR) by USI. The following equations illustrate the relationship between the STR, path optical density, and stack exit opacity.

$$STR = \text{stack taper ratio} = L_x/L_t$$

$L_x$ = stack exit inside diameter (ft)

$L_t$ = the stack or duct inside diameter at the monitor location (ft)

$$OP_x = \left[1 - 10^{-(STR)(OD)}\right] \times 100$$

where: $OP_x$ = stack exit opacity (%)

OD = transmissometer optical density (path)

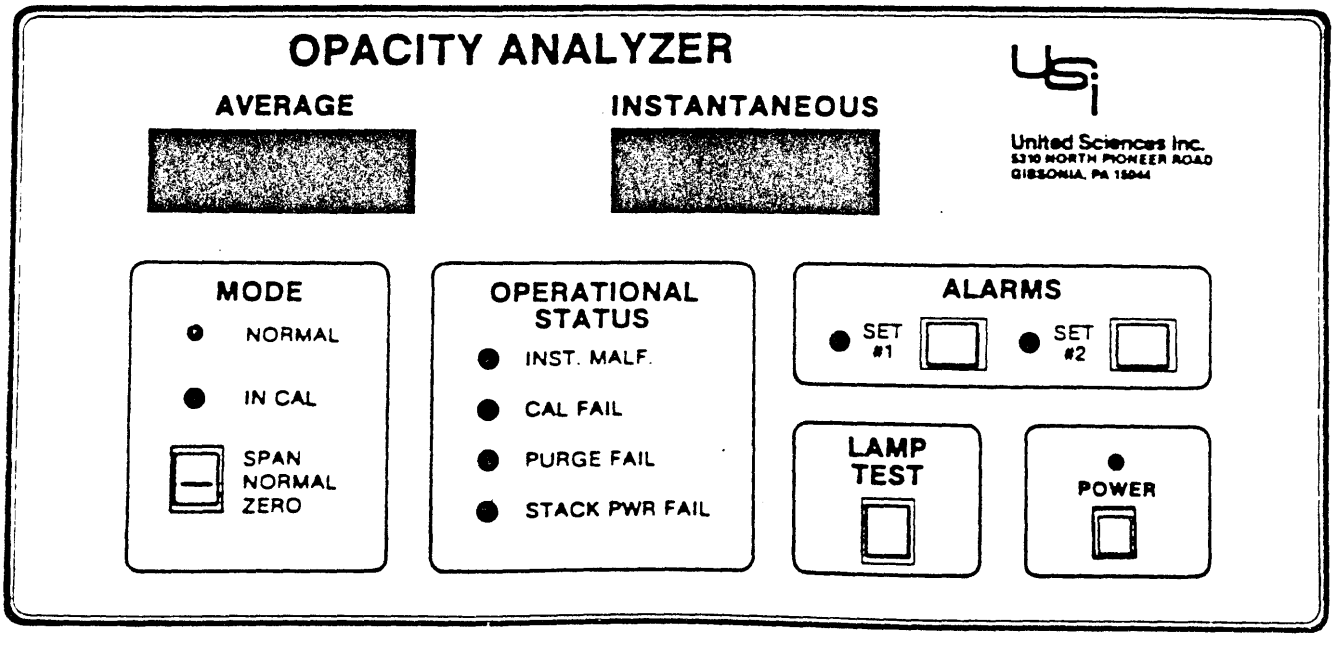


Figure 7-2. United Sciences, Inc. Model 500C Control Unit.

### 7.1.2 Performance Audit Procedures

Preliminary Data

1. Obtain the stack exit inside diameter and the stack or duct inside diameter (or width) at the transmissometer location. Record these values in blanks 1 and 2 of the USI Model 500C Performance Audit Data Sheet.

   Note: Effluent handling system dimensions may be acquired from the following sources listed in descending order of reliability: (1) physical measurements; (2) construction drawings; (3) opacity monitor installation/certification documents; and (4) source personnel recollections.

2. Calculate the STR (divide the value in blank 1 by the value in blank 2). Record the result in blank 3.

3. Record the source-cited STR value in blank 4.

   Note: The STR is preset by the manufacturer using stack dimensions supplied by the source. The value recorded in blank 4 should be the value that source personnel cite as being set inside the control unit. Typically, this value is obtained from monitor installation data, monitor certification data, or COMS service reports.

4. Obtain the reference zero and span calibration values. Record these values in blank 5 and blank 6, respectively.

   Note: The reference zero and span calibration values may not be the same as the values recorded during instrument installation and/or certification. The zero and span values recorded in blank 5 and blank 6 should be the reference values recorded during the most recent clear-path calibration of the COMS.

Data Acquisition System Check

5. Go to the opacity data acquisition system (DAS) location and inspect the data recorder to ensure proper operation. Annotate the data record with the auditor's name, affiliation, plant, unit, date, and time.

6. Record the zero value output to the data recorder during the most recent automatic calibration cycle in blank 7.

7. Record the span value output to the data recorder during the most recent automatic calibration cycle in blank 8.

Fault Lamp Checks

The following steps describe the Model 500C fault lamp analysis procedures. Unless otherwise noted, the audit can continue with illuminated fault lamps, provided that source personnel have been notified of the fault conditions.

8. Record the status (ON or OFF) of the INST MALF lamp in blank 9.

   Note: An illuminated INST MALF lamp indicates that one or several fault conditions not covered by a specific fault lamp have been detected by the instrument self-diagnostic circuitry.

   If the INST MALF lamp is illuminated, specific fault information can be output to the front panel meter in the form of a fault code by pressing the "ALARM" "SET 1" and "SET 2" buttons simultaneously. Before continuing the audit, source personnel should determine the cause of the fault. The auditor should discuss the cause and magnitude of the COMS fault with source personnel to determine if the audit can continue.

9. Record the status (ON or OFF) of the CAL FAIL lamp in blank 10.

   Note: An illuminated CAL FAIL lamp indicates that the most recent zero or span calibration results exceeded the calibration limits set inside the control unit.

10. Record the status (ON or OFF) of the PURGE FAIL lamp in blank 11.

    Note: An illuminated PURGE FAIL lamp indicates that a significant or total loss of purge air has been detected. The audit can generally continue under these circumstances; however, source personnel should be notified of this condition immediately. Purge air failure can damage the on-stack COMS components.

11. Record the status (ON or OFF) of the STACK PWR FAIL lamp in blank 12.

    Note: An illuminated STACK PWR FAIL lamp indicates that power to the on-stack COMS components has been lost. Power to the transceiver must be restored before the audit can continue.

Zero Check

12. Initiate the zero calibration mode by moving the MODE switch to the "ZERO" position.

    Note: During normal operation, the COMS reads the zero and span segments of the rotating calibration wheel approximately once per second, and compiles the one-second calibration data into six-minute averages. When the MODE switch is moved to the "ZERO" position, the left hand front panel meter of the control unit will display the six-minute integrated zero value currently stored in the COMS memory; this value is updated at the end of each six-minute integration period. Moving the MODE switch to the "ZERO" position does not affect the COMS output to the data recorder; calibration data are output to the data recorder only during an automatic calibration cycle.

    When the zero mode is initiated, the green NORMAL light will go out, and the yellow IN CAL light will become illuminated.

13. Record the zero value output to the left hand panel meter display in blank 13.

Note: During the zero calibration check the COMS outputs the signal produced by reading the zero segment of the calibration wheel. The zero mechanism is designed to present the transceiver with a simulated clear-path condition. The daily zero check does test the actual clear-path zero setting, nor does it provide an indication of cross-stack parameters such as the optical alignment of the transmissometer or drift in the reflectance of the retroreflector. The actual clear-path zero can only be checked during clear-stack or off-stack calibration of the COMS.

Dirt Compensation Check

14. With the COMS still in the ZERO mode, press and hold the "ALARM" "SET 1" and "SET 2" buttons simultaneously.

15. Record the dirt compensation value displayed on the left hand front panel meter in blank 14, and release the "ALARM SET" buttons.

Note: The amount of dust on the transceiver optics and zero segment of the calibration wheel is quantified by reading the zero segment of the calibration wheel. When a deviation from zero is detected, the zero point of the COMS is electronically reset, and the amount of electronic zero compensation (dirt compensation) is stored in the COMS memory. The dirt compensation value is automatically updated at six-minute intervals.

Span Check

16. Initiate the upscale calibration mode by moving the MODE switch to the "SPAN" position.

Note: During normal operation the COMS reads the zero and span segments of the rotating calibration wheel approximately once per second and compiles the one-second calibration data into six-minute averages. When the MODE switch is moved to the "SPAN" position, the left hand front panel meter of the control unit will display the six-minute integrated span value currently stored in the COMS memory; this value is updated at the end of each six-minute integration period. Moving the MODE switch to the "SPAN" position does not affect the COMS output to the data recorder; calibration data are output to the data recorder only during an automatic calibration cycle.

When the span mode is initiated, the green NORMAL light will go out, and the yellow IN CAL light will become illuminated.

17. Record the span value output to the left hand panel meter display in blank 15.

Note: During the span calibration check, the COMS outputs the signal produced by reading the span segment of the calibration wheel. The calibration mechanism is designed to provide an indication of the upscale accuracy of the COMS.

18. Return the COMS to the normal mode by placing the MODE switch in the "NORMAL" position.

    Note: The yellow IN CAL light will go out and the green NORMAL light will become illuminated.

Stack Taper Ratio (STR) Check

19. Open the front panel of the control unit and locate switch S2.

    Note: Switch S2 is mounted on the lower left hand corner of the circuit board attached to the back of the hinged front panel.

20. Press switch S2 to display the stack taper ratio (STR) on the front panel meter.

21. Record the STR value displayed on the front panel meter in blank 16.

    Note: If the STR value is not determined directly from the control unit, the value in blank 4 should be transposed to blank 16.

22. Close the front panel of the control unit and go to the transmissometer location.

Transceiver Dust Accumulation Check

23. Open the transceiver protective weather cover.

24. Open the junction box mounted on the transceiver blower plate (see Figure 7-3).

25. Record the effluent opacity reading prior to cleaning the transceiver optics in blank 17.

26. Move the "run/test" switch inside the junction box to the "test" position. This stops the transceiver calibration wheel.

    Note: The "run/test" switch must always be moved to the "test" position before the transceiver unit is opened. Placing the "run/test" switch in the "test" position freezes the zero compensation value and prevents the instrument from logging any portion of the transceiver output as zero and span data.

27. Open the transceiver. Clean the transceiver optics and the glass surfaces of the reflective portions of the calibration wheel.

28. Manually rotate the calibration wheel until the wheel does not obstruct the measurement path when the transceiver is closed. The open portion of the calibration wheel will be in the up position.

29. Close the transceiver.

30. Record the post-cleaning effluent opacity reading in blank 18.

31. Go to the retroreflector location.

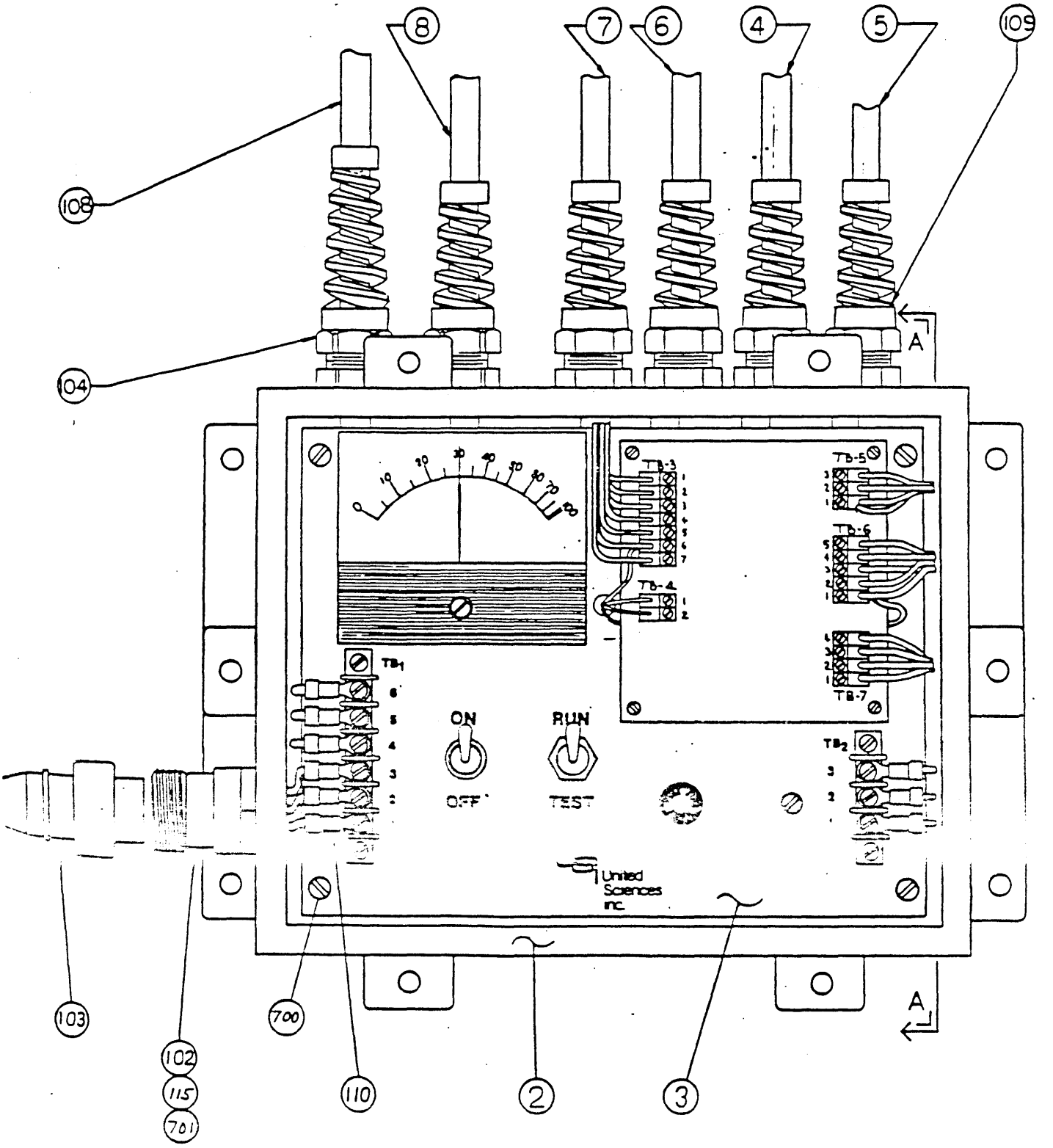


Figure 7-3. United Sciences, Inc. Model 500C Junction Box (J-Box).

Retroreflector dust Accumulation check

32. Open the retroreflector protective weather cover.

33. Record the effluent opacity reading prior to cleaning the retroreflector optics in blank 19.

34. Open the retroreflector, inspect and clean the retroreflector optics, and close the retroreflector.

35. Record the post-cleaning effluent opacity in blank 20.

Optical Alignment Check

36. Open the retroreflector. Swing the retroreflector cap assembly all the way back so that ambient light will backlight the open retroreflector port.

37. Go to the transceiver location and look through the alignment sight on the back of the transceiver unit. Observe the position of the alignment reticle relative to the circular image of the open retroreflector port.

38. Indicate acceptable or unacceptable optical alignment (YES or NO) in blank 21 of the 500C audit data form.

    Note: The instrument is acceptably aligned if the inner circular image of the alignment reticle is within the circular image of the open retroreflector port.

39. Draw the image seen in the alignment sight in the circle provided on the audit data form.

    Note: The optical alignment has no effect on the internal calibration checks of the instrument, or on the calibration error test using the audit jig. However, if the transceiver and retroreflector are not optically aligned, the effluent opacity data will be biased high since a portion of the measurement beam will be misdirected before it is returned to the measurement detector.

40. Return to the retroreflector location. Close and secure the retroreflector cap assembly. Close and secure the protective weather cover.

    Note: After the transmissometer optics have been cleaned, the dirt compensation circuitry must be reset so that it does not continue to compensate for dust that is no longer present on the transceiver optics.

41. Return to the transceiver location.

42. Reset the instrument dirt compensation by moving the "run/test" switch to the "run" position. Allow the instrument to operate with the calibration wheel running for 13 minutes.

Note: It is important to allow the instrument to operate in the "run" mode for a full 13 minutes before continuing the audit. This ensures that at least one full six-minute zero, span, and measurement cycle is completed; the dirt compensation is reset at the end of each six-minute measurement cycle.

Calibration Error Check

The calibration error check is performed using three neutral density filters and an audit device called an audit jig. When installed on the transmissometer, the audit jig intercepts the measurement light beam and returns it directly to the measurement detector. Performing the calibration error check on-stack using the audit jig and filters determines the linearity of the instrument response relative to the current clear-path zero setting. This calibration error check does not determine the accuracy of the actual instrument clear-path zero setting, or the status of any cross-stack parameters. A true calibration error test is performed by moving the on-stack components to a location with minimal ambient opacity, making sure that the proper path length and alignments are attained, and placing the calibration filters in the measurement beam path.

43. Move the "run/test" switch inside the junction box to the "test" position. This stops the transceiver calibration wheel.

    Note: The "run/test" switch must always be moved to the "test" position before the transceiver unit is opened. Placing the "run/test" switch in the "test" position freezes the zero compensation value and prevents the instrument from logging any portion of the transceiver output as zero and span data.

44. Open the transceiver and install the audit jig over the transceiver exit window.

    Note: The source may have ordered a monitor-specific audit jig from USI. The monitor-specific audit jig is typically preadjusted to simulate the correct clear-path zero response when installed on the transceiver unit. If a monitor-specific audit device is available, it should be used to conduct the calibration error test. If a monitor-specific audit device is not available, the auditor should supply a similar device equipped with an adjustable iris.

45. If an auditor supplied audit jig is being used to conduct the calibration error test, adjust the audit jig to produce a zero response of 0-2% opacity on the COMS data recorder.

    Note: The acquisition of monitor responses from the data recorder requires communication between the auditor at the transmissometer location and an assistant at the data recorder location.

46. Record the audit filter serial numbers and opacity values in blanks 22, 23, and 24.

47. Remove the filters from their protective covers, inspect, and, if necessary, clean them.

48. Record the jig zero value from the data recorder.

    Note: It is not necessary for the jig zero value to be exactly 0% opacity since the audit filter correction equations can account for an offset in the jig zero setting. A zero setting of 0-2% opacity is acceptable. To adjust the audit jig iris, remove the three retaining screws that hold the iris cover in place and remove the iris cover. (This is sometimes difficult due to a snug fit between the iris cover and the O-ring iris compartment seal.) With the audit jig installed on the transceiver unit, loosen the iris set screw on top of the iris adjustment plate, and move the screw clockwise or counterclockwise to obtain the desired COMS response.

49. Insert the low range neutral density filter into the audit jig.

50. Wait for approximately two minutes or until a clear value has been recorded and displayed on the data recorder.

    Note: The audit data should be taken from a data recording/reporting device that presents instantaneous opacity (or opacity data with the shortest available integration period).

51. Record the COMS response to the low range neutral density filter.

52. Remove the low range filter from the audit device and insert the mid range neutral density filter.

53. Wait approximately two minutes and record the COMS response.

54. Remove the mid range filter from the audit device and insert the high range filter.

55. Wait for approximately two minutes and record the COMS response.

56. Remove the high range filter from the audit device, wait approximately two minutes, and record the jig zero value.

    Note: If the final jig zero value differs from the initial value by more than 1% opacity, the jig zero should be reset to within 1% of the initial value, and the 3-filter run (i.e., low, mid, and high) should be repeated.

57. Repeat steps 49 through 56 until a total of five opacity readings are obtained for each neutral density filter.

58. If six-minute integrated opacity data are recorded, repeat steps 48 through 56 once more, changing the waiting periods to 13 minutes.

59. Record the six-minute integrated data.

60. When the calibration error test is complete, remove the audit jig, close and secure the transceiver, restart the calibration wheel by moving the "run/test" switch to the "run" position, and replace the J-box cover.

61. Close and secure the protective weather cover.

62. Return to the control unit/data recorder location and obtain a copy of the audit data from the data recorder.

63. Transcribe the calibration error response data from the data recorder to blanks 25 through 50 and calculate the performance audit results.

### 7.1.3 Interpretation of Audit Results

This section is designed to help the auditor interpret the United Sciences, Inc. Model 500C performance audit results. A general discussion of performance audit results is presented in Section 2 of this manual.

#### Stack Exit Correlation Error Check

The path length correction factor (blank 51) should be within ±2%. This error exponentially affects the opacity readings, resulting in over- or underestimation of the stack exit opacity. The most common error in computing the path length correction factor (STR) is the use of the flange-to-flange distance in place of the stack or duct inside diameter at the monitor location. This error will result in underestimation of the stack exit opacity and can be identified by comparing the monitor optical path length to the flange-to-flange distance. The flange-to-flange distance should be greater by approximately two to four feet.

#### Fault Lamp Analysis

Fault lamps are typically associated with parameters that the monitor manufacturer feels are critical to COMS function, and to the collection of valid opacity data. The "INST MALF" lamp on the USI 500C can be indicative of several fault conditions. The most common fault conditions indicated by the "INST MALF" lamp are dirt compensation in excess of 4% opacity, or a stopped calibration wheel. Specific fault information can be output to the front panel meter of the control unit in the form of a fault code by pressing the "ALARM" "SET 1" and "SET 2" buttons simultaneously. The instrument manual must be consulted to determine the meaning of the fault code. This is typical of the newer digital control units. It allows for increased sophistication of the self diagnostic circuitry without cluttering the face of the control unit with fault lamps that are rarely used. In addition to the general "INST MALF" fault lamp, the 500C is equipped with several parameter specific fault lamps that warn of calibration failure, purge air failure, and stack power failure. The COMS is not functioning properly if any of these fault lamps are illuminated.

#### Zero and Span Check

The internal zero and span errors (blank 53 and blank 55) should not exceed ±4% opacity. A zero or span error in excess of ±4% opacity may be due to

excessive dust accumulation on the transceiver optics, miscalibration of the CEMS, or an improperly named span segment of the calibration wheel. Dust accumulation on the transceiver optics sufficient to cause significant zero error will be accompanied by an excessive dirt compensation value and an illuminated "INST MALF" fault lamp. Other causes of zero and span error are difficult to pinpoint during an audit.

If the zero and span errors are due to a data recorder offset, both errors will be in the same direction and will be of the same magnitude.

Dirt (Zero) Compensation Check

The dirt compensation function is designed to minimize the effects of dirty optics on the instrument output. The amount of dust on the transceiver exit window and zero segment of the calibration wheel is quantified each time the zero segment of the calibration wheel is read. The dirt compensation value recorded in blank 14 should not exceed ±4% opacity. If an excessive dirt compensation value is due only to dust build up on the transceiver optics, it indicates that the purge air flow and/or the frequency of lens cleaning is insufficient to keep the transmissometer optics clean. A negative dirt compensation value, or a value that persists after a thorough cleaning of the transceiver optics indicates malfunctioning or improperly adjusted COMS electronics. The most common cause of negative dirt compensation values is clear-path adjustment of the COMS when the optics are not clean. The dirt compensation function takes into account any condition that causes the COMS output to deviate from 0% opacity when the zero portion of the calibration wheel is read.

Transmissometer Dust Accumulation Check

The results of the dust accumulation check (blank 58) should not exceed 4%. A dust accumulation value of more than 4% opacity may indicate that the airflow of the purge system and/or the cleaning frequency of the optical surfaces are inadequate. When determining the optical surface dust accumulation, the auditor should note whether the effluent opacity is reasonably stable (within ±2% opacity) before and after cleaning the optical surfaces. If the effluent opacity is fluctuating by more than ±2%, the dust accumulation analysis should be omitted.

Optical Alignment Check

When the transceiver and retroreflector are misaligned, a portion of the measurement beam that should be returned to the measurement detector is misdirected, resulting in a positive bias in the data reported by the COMS. One of the most common causes of misalignment is vibration, which may cause the on-stack components to shift slightly on the instrument mounting flanges. Another common cause of misalignment is thermal expansion and contraction of the structure on which the transmissometer is mounted. If the COMS is being audited while the unit is off-line (cold stack), the results of the alignment analysis may not be representative of how well the instrument is aligned when the stack or duct is at normal operating temperature.

Calibration Error Check

Calibration error results (blanks 68, 69, and 70) in excess of ±3% are indicative of a non-linear or miscalibrated instrument. However, the absolute calibration accuracy of the monitor can be determined only when the instrument clear-path zero setting is known. If the zero and span are out-of-specification, the calibration error data will often be biased in the same direction as the zero and span errors. Even if the zero and span data indicate the COMS is calibrated properly, the monitor may still be inaccurate due to error in the clear-path zero adjustment. The optimum calibration procedure involves using neutral density filters during clear-stack or off-stack COMS calibration. This procedure would establish both the absolute calibration accuracy and linearity of the COMS. If this procedure is impractical, and it is reasonable to assume that the clear-path zero is set correctly, the monitor's calibration linearity can be set using either the neutral density filters or the internal zero and span values.

# SECTION 8

# PERFORMANCE AUDIT PROCEDURES FOR THE LAND COMBUSTION OPACITY MONITOR

## 8.1 LAND COMBUSTION MODEL 4500 OPACITY MONITOR

### 8.1.1 COMS Description

The Land Combustion Model 4500 continuous opacity monitoring system (COMS) consists of three major components: the transmissometer, the air purging system, and the control unit. The transmissometer consists of a transceiver unit mounted on one side of the stack or duct and a retroreflector mounted on the opposite side (see Figure 8-1). The retroreflector is a passive unit designed to return the measurement light beam to the transceiver. The transceiver contains the light source, the detector, the optical bench, and the essential on-stack electronics. The Model 4500 uses a single source, single detector system. Light emitted from an incandescent lamp at the back of the transceiver unit is focused through a perforated rotating disc. The rotating disc modulates the light beam to allow the instrument to differentiate between the measurement beam and ambient light. The light beam is then chopped into reference and measurement beams by projecting the light through a rotating butterfly shaped reflective timing wheel. When the light beam is intercepted by one of the lobes of the timing wheel, the light is sent directly to the detector to produce a reference signal. A measurement signal is produced when the light beam is not intercepted by the timing wheel. The uninterrupted light beam crosses the stack or duct and is returned to the detector in the transceiver housing by the retroreflector. The reference and measurement signals are processed by the transceiver electronics into a signal that represents the optical density of the effluent.

Daily zero and upscale calibration of the opacity monitor is accomplished through the use of a span filter and zero mirror. The span filter is sealed inside the transceiver head while the zero mirror is mounted externally on the front of the transceiver unit. When a calibration cycle is initiated, servomotors move the zero mirror and the span filter into the measurement path, simulating an upscale opacity condition. The clear-path zero condition is simulated by removing the span filter from the measurement path and allowing the COMS to read the zero mirror alone.

The primary component of the purge-air system is an electric blower that floods the cavity within the instrument mounting flange with filtered ambient air. The air purging system serves a threefold purpose: (1) it keeps the transmissometer protective optics clean by providing a filtered air buffer between the protective optics and the effluent; (2) it keeps the protective optics from accumulating condensed stack gas moisture; and (3) it minimizes thermal conduction from the stack to the instrument. A standard installation has separate purge-air systems for the transceiver and retroreflector units.

The Model 4500 control unit converts the transceiver output to a signal that represents stack exit opacity, controls the daily automatic calibration cycles, and performs several self-diagnostic functions. The unit is

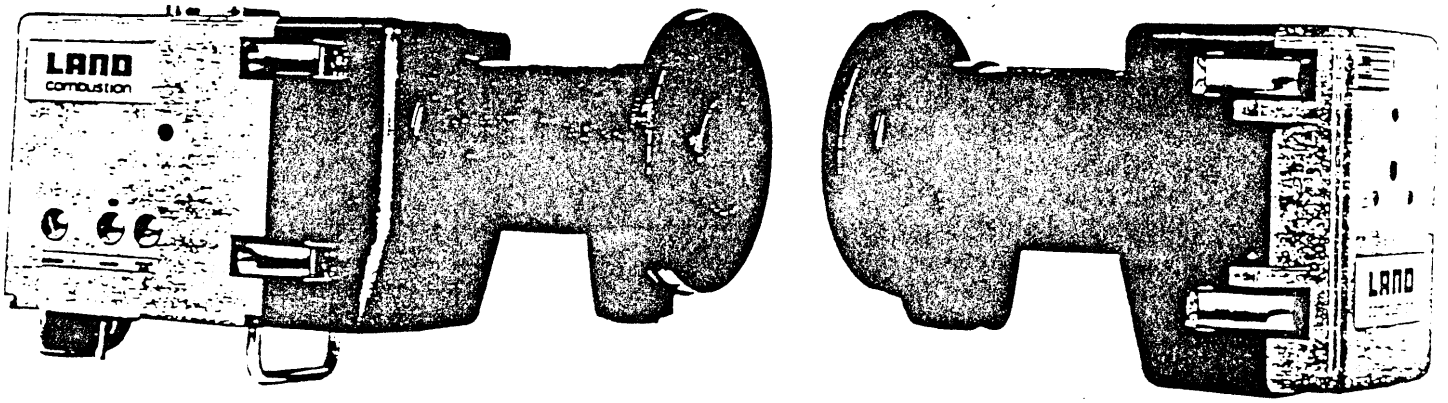


Figure 8-1. Land Combustion Model 4500 Transmissometer.

microprocessor based and is menu driven to allow several COMS parameters to be displayed on the digital front panel meter (see Figure 8-2). Several indicator lamps on the front of the unit provide information regarding the status of the COMS. An "ALARM" LED and an "ALERT" LED warn of elevated effluent opacity levels. A "CALIBRATE" lamp indicates that the COMS is in the calibration mode. A "FAULT" lamp becomes illuminated when one or more COMS malfunctions have been detected by the COMS self-diagnostic circuitry. Specific fault information can be output to the panel meter by pressing the "AUTO TEST" key and scrolling through the COMS faults (if multiple faults have occurred) using the "ENTER" key.

The opacity monitor measures the amount of light transmitted through the effluent from the transceiver to the retroreflector and back again. The instrument uses this double-pass transmittance to calculate the optical density of the effluent at the monitor location, or the "path" optical density. In order to provide stack exit opacity data, the path optical density must be corrected to stack exit conditions. The correction factor is calculated as the ratio of the stack exit inside diameter to the measurement path length (two times the inside diameter of the stack or duct at the transmissometer location). This ratio is called the "optical path length ratio" (OPLR) when used in reference to the Land 4500. This value is set within the control unit circuitry and the correction is automatically applied to the path optical density measurements. The following equations illustrate the relationship between the OPLR, path optical density, and stack exit opacity.

$$OPLR = \frac{L_x}{L_t} = \text{optical path length ratio}$$

where: $L_x$ = stack exit inside diameter (ft)

$L_T$ = measurement path length (ft) = two times the effluent depth at the transmissometer location

$$OP_x = \left[1 - 10^{-(OPLR)(OD)}\right] \times 100$$

where: $OP_x$ = stack exit opacity (%)

OD = transmissometer optical density (path)

### 8.1.2 Performance Audit Procedures

Preliminary Data

1. Obtain the stack exit inside diameter and transmissometer measurement path length (two times the stack or duct inside diameter or width at the transmissometer location). Record these values in blanks 1 and 2 of the Land Model 4500 Performance Audit Data Sheet.

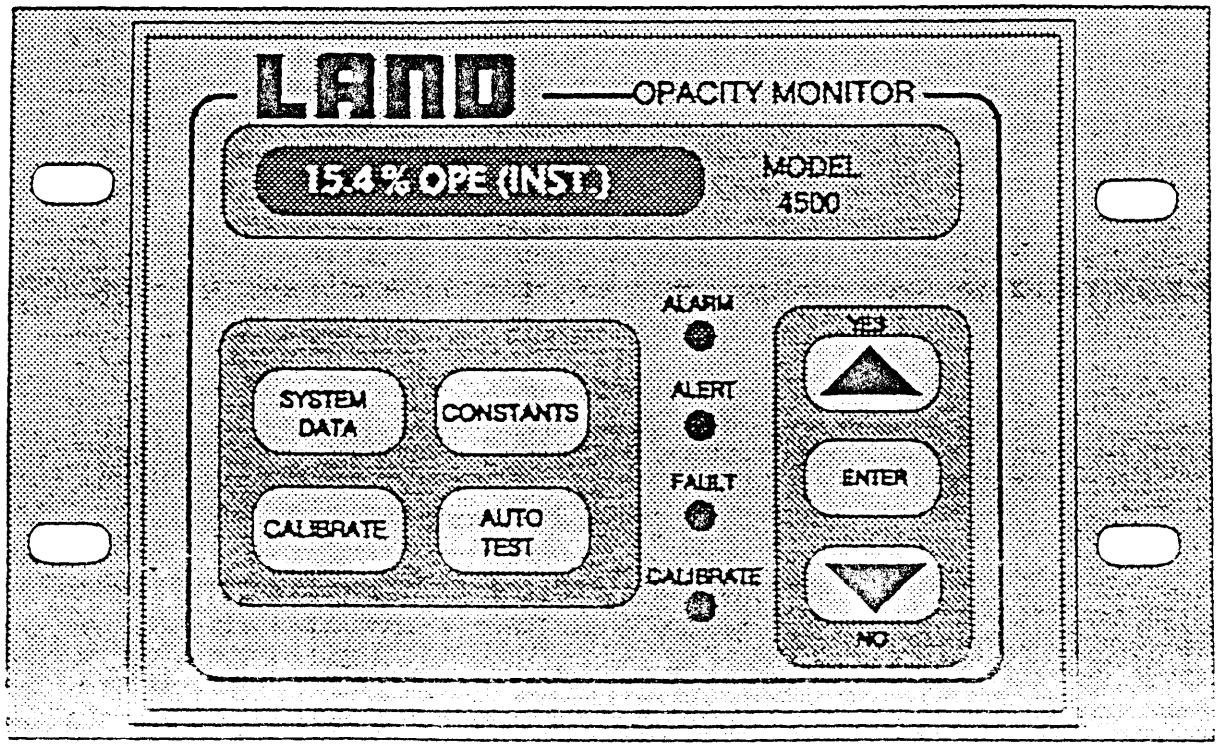


Figure 8-2. Land Combustion Model 4500 Control Unit.

Note: Effluent handling system dimensions may be acquired from the following sources listed in descending order of reliability: (1) physical measurements, (2) construction drawings, (3) opacity monitor installation/ certification documents, and (4) source personnel recollections.

2. Calculate the OPLR (divide the value in blank 1 by the value in blank 2). Record the result in blank 3.

3. Record the source cited OPLR value in blank 4.

   Note: The OPLR is preset by the manufacturer using stack dimensions supplied by the source. The value recorded in blank 4 should be the value source personnel cite as being set inside the control unit. Typically, this value is obtained from monitor installation data, monitor certification data, or COMS service reports.

4. Obtain the reference zero and span calibration values. Record these values in blank 5 and blank 6, respectively.

   Note: These values are set during monitor calibration and may not be equal to the values recorded at COMS installation and/or certification. Records of the zero and span values resulting from the most recent monitor calibration should be kept by source personnel. If source personnel cannot site an updated span reference value, the factory assigned span value should be entered in blank 6. The factory assigned span filter value is calculated using data collected during the audit and the following formula:

$$\text{Span value} = \left\{1 - \left[10^{-(\text{OPLR})(\text{O.D.})}\right]\right\} \times 100$$

where:

Span value = the factory assigned span filter value in percent opacity

OPLR = the optical path length ratio from blank 13

O.D. = the span filter value in optical density read from the serial number plate on the front of the transceiver unit (blank 23).

5. Go to the opacity data acquisition system (DAS) location and inspect the data recorder to ensure proper operation. Annotate the data record with the auditor's name, affiliation, plant, unit, date, and time.

## Control Unit Checks

### Fault Lamp Checks

6. Record the status (ON or OFF) of the FAULT lamp in blank 7.

   Note: An illuminated FAULT lamp indicates that one or more fault conditions have been detected by the instrument self-diagnostic circuitry. If the FAULT lamp is illuminated, source personnel should be asked to determine the cause of the fault. The auditor should discuss the cause and magnitude of the COMS fault with source personnel to determine if the audit can continue. Specific fault information can be output to the digital display of the control unit using the following procedure:

   Press the AUTO TEST key to display a two or three word description of the system fault on the front panel meter of the control unit. Press the ENTER key to determine if multiple faults have occurred; pressing the ENTER key allows the auditor to scroll through additional fault information.

   If no faults have been detected, "NO SYSTEM FAULTS" will appear on the control unit digital display.

   Press the SYSTEM DATA key to return to the system data menu.

### Zero and Span Check

7. Press the CALIBRATE key. "ENTRY CODE = 0" will appear on the digital front panel meter of the control unit.

8. Enter the number 10 as the entry code by pressing the YES (▲) key until the number 0 is replaced by the number 10. "ENTRY CODE = 10" should be displayed on the panel meter.

9. Press the ENTER key. The word "CALIBRATE?" will appear on the panel meter as a que to ensure that the calibration cycle is not accidentally initiated.

10. Press the YES (▲) key to initiate the calibration cycle.

    Note: The COMS will enter the span mode for 1.5 minutes. The red CALIBRATE LED will become illuminated to indicate the COMS is in the calibrate mode.

11. Record the span value output to the front panel meter of the control unit in blank 8.

12. Record the span value output to the data recorder in blank 9.

    Note: When the calibration cycle is initiated, servomotors move the zero mirror and span filter into the path of the measurement light beam. The span mechanism is designed to provide an indication of the upscale accuracy of the COMS relative to the simulated clear-path zero. It does not provide a check of cross-stack parameters such as the optical alignment of the transmissometer or drift in the reflectance of the retroreflector.

Note: After 1.5 minutes in the span mode, the COMS will automatically enter the zero mode.

13. Record the zero value output to the front panel meter of the control unit in blank 13.

14. Record the zero value output to the data recorder in blank 11.

    Note: During the zero calibration check, the span filter is removed from the measurement path allowing the instrument to read the zero mirror alone. The zero mechanism is designed to present the transceiver with a simulated clear-path condition. The daily zero check does not test the actual clear-path zero, nor does it provide a check of cross-stack parameters such as the optical alignment of the transmissometer or drift in the reflectance of the retroreflector. The actual clear-path zero can only be checked during clear-stack or off-stack calibration of the COMS. In addition to simulating the instrument clear-path zero, the zero mechanism allows the amount of dust on the transceiver optics (primary lens and zero mirror) to be quantified by the COMS zero compensation circuitry.

    Note: After 1.5 minutes in the zero mode, the COMS will automatically return to the measurement mode. The transition from the zero mode to the measurement mode takes an additional 30 seconds. The CALIBRATE indicator lamp will go out when the 3-minute calibration cycle is complete.

Zero Compensation Check

15. Press the SYSTEM DATA key to enter the system data menu.

16. Press the ENTER key until the zero compensation value in percent opacity (e.g., "#.# % ZERO COMP.") is displayed on the panel meter of the control unit.

17. Record the zero compensation value in blank 12.

OPLR Check and Constant Data Adjustments

Before auditing the on-stack components of the COMS, several items on the constants menu must be reset to ensure valid data are collected and to prevent damage to the transceiver calibration mechanism. The original setting of each parameter to be changed must be recorded so that it can be reset at the conclusion of the audit. In addition, the OPLR set within the control unit can be output as one of the items on the constants menu.

18. Press the CONSTANTS key to gain access to the items on the constants menu. "ENTRY CODE = 0" will appear on the panel meter of the control unit.

19. Enter the number 10 as the entry code by pressing the YES (▲) key until the number 0 is replaced by the number 10. "ENTRY CODE = 10" should be displayed on the panel meter of the control unit.

20. Press the ENTER key to scroll through the items on the constants menu until the OPLR value is displayed.

21. Record the OPLR value in blank 13.

    Note: If the OPLR value is not determined directly from the control unit, the OPLR in blank 4 should be entered in blank 13.

22. Press the ENTER key to scroll through the items on the constants menu until the automatic calibration frequency ("CAL EVERY ## HOURS") is displayed on the panel meter.

23. Record the automatic calibration frequency in blank 14.

24. Press the YES (▲) or the NO (▼) key until the automatic calibration frequency is set at 00 (e.g., "CAL EVERY 00 HOURS").

    Note: Setting the automatic calibration frequency at 00 disables the automatic calibration function to prevent inadvertent movement of the zero mirror during the calibration error portion of the audit. The zero mechanism may be damaged if it is activated while the audit jig is installed on the transceiver unit. If the automatic calibration frequency is already disabled (set to 00) at the control unit, the daily COMS calibration is probably initiated by some other COMS control device, such as the computerized data acquisition system. If this is the case, the auditor should have source personnel disable the automatic calibration cycle at the appropriate stage of COMS control. The auditor must be careful to note that the calibration cycle has been disabled and should remind source personnel to reset the automatic calibration cycle at the end of the COMS audit.

25. Press the ENTER key until the instrument output range 1 setting ("OUTPUT RANGE 1: ###%") is displayed on the front panel meter of the control unit.

26. Record the value of output range 1 in blank 15.

27. Press the YES (▲) or the NO (▼) key until output range 1 is set at 100% (e.g., "OUTPUT RANGE 1: 100%").

28. Press the ENTER key until the instrument output range 2 setting ("OUTPUT RANGE 2: ###%") is displayed on the front panel meter of the control unit.

29. Record the value of output range 2 in blank 16.

30. Press the YES (▲) or the NO (▼) key until output range 2 is set at 100% (e.g., "OUTPUT RANGE 2: 100%").

    Note: Setting both output ranges to 100% ensures that the instrument range will not be exceeded during the calibration error test.

31. Press the SYSTEM DATA key to display the items on the system data menu.

32. Press the ENTER key until instantaneous effluent opacity values are displayed on the front panel meter of the control unit.

33. Go to the transmissometer location.

Retroreflector Dust Accumulation check

34. Open the retroreflector protective weather cover.

35. Record the effluent opacity reading prior to cleaning the retroreflector optics in blank 17.

    Note: Acquisition of effluent opacity data needed for the retroreflector and transceiver dust accumulation checks may require communication with an assistant at the control unit or DAS location.

36. Open the retroreflector, inspect and clean the retroreflector optics, and close the retroreflector.

37. Record the post-cleaning effluent opacity in blank 18.

38. Close and secure the protective weather cover.

Transceiver Dust Accumulation Check

39. Open the transceiver protective weather cover.

40. Record the effluent opacity reading prior to cleaning the transceiver optics in blank 19.

41. Open the transceiver head and clean the transceiver optics (primary lens and zero mirror).

42. Close the transceiver and record the post-cleaning effluent opacity in blank 20.

    Note: After the transmissometer optics have been cleaned, the zero compensation value must be updated to ensure that the zero compensation circuitry does not continue to adjust the transceiver output for dust that is no longer present on the optics. The zero compensation value is updated by initiating a zero and span calibration cycle at the control unit. Steps 43 through 46 must be performed by an assistant at the COMS control unit location.

43. Press the CALIBRATE key. "ENTRY CODE = 0" will appear on the digital front panel meter of the control unit.

44. Enter the number 10 as the entry code by pressing the YES (▲) key until the number 0 is replaced by the number 10. "ENTRY CODE = 10" should be displayed on the panel meter.

45. Press the ENTER key. The word "CALIBRATE?" will appear on the panel meter to ensure that the calibration cycle is not accidentally initiated.

46. Press the YES (▲) key to initiate the calibration cycle.

Note: After 1.5 minutes in the span mode the COMS automatically enters the zero mode. It is during the zero mode that the zero compensation value is reset; the auditor must be careful not to obstruct the measurement light beam during the zero calibration mode. After 1.5 minutes in the zero mode the COMS will enter a transitional period for about 30 seconds before returning to normal operation.

Optical Alignment Check

47. Rotate the function selector switch on the bottom of the transceiver unit clockwise to the VISIER position.

48. Determine if the transmissometer is optically aligned by looking through the viewing port on the right-hand side of the transceiver and observing the position of the measurement beam image relative to the target circle. The alignment is considered to be acceptable if the image of the measurement beam is inside the target circle.

49. Indicate acceptable or unacceptable alignment (YES or NO) in blank 21 on the performance audit data sheet.

50. Draw the orientation of the measurement beam image relative to the alignment target circle in the circle provided on the performance audit data sheet.

Note: The optical alignment has no effect on the internal calibration checks of the instrument or on the calibration error test using the audit jig. However, if the transceiver and retroreflector are not optically aligned, the effluent opacity data will be biased high since a portion of the measurement beam will be misdirected before it is returned to the measurement detector.

51. Return the mode selector switch to the "MEASURE" position and replace the protective cover.

Calibration Error Check

The calibration error check is performed using three neutral density filters and an audit device called an audit jig. When installed on the transmissometer, the audit jig intercepts the measurement beam and returns it directly to the measurement detector. Performing the calibration error check on-stack using the audit jig and filters determines the linearity of the instrument response relative to the current clear-path zero setting. This calibration error check does not determine the accuracy of the actual clear-path zero or the status of any cross-stack parameters. A true calibration check is performed by moving the on-stack components to a location with minimal ambient opacity, making sure that the proper path length and alignments are attained, and placing the calibration filters in the measurement beam path.

Note: The manufacturer suggests that the zero compensation function be defeated during the calibration error test and has installed an "AUTO COMP"

switch inside the transceiver for this purpose (see figure 8-3). Defeating the zero compensation with the "AUTO COMP" switch requires access to the transceiver internal circuit boards and should only be attempted by an experienced auditor or with the assistance of source personnel. If it is impractical to defeat the zero compensation function, the auditor may continue the audit with functioning zero compensation circuitry, provided the zero compensation setting was updated following the transceiver dust accumulation check. (Steps 43 through 46).

Note: Steps 52 through 54 should be omitted if the auditor does not wish to defeat the zero compensation function for the calibration error check.

52. Remove the round lamp access plate from the back of the transceiver by loosening the three captive retaining screws and pulling off the cover.

53. Look through the lamp access port into the rear upper right-hand corner of the transceiver and locate the "AUTO COMP" toggle switch (see figure 8-3). Move the "AUTO COMP" toggle switch to the "UP" position. DO NOT TOUCH THE MEASUREMENT LAMP.

    Note: The "AUTO COMP" toggle switch is mounted on the upper right-hand corner of the extinction (optical density) printed circuit board; access is difficult.

54. Replace the lamp access cover and temporarily secure the cover by hand tightening one or more of the retaining screws.

55. Record whether the zero compensation function has been defeated (YES or NO) in blank 22.

56. Open the gray junction box mounted near the transceiver unit.

57. Open the transceiver and install the audit jig by sliding it onto the transceiver objective lens barrel.

    Note: The audit device will not slide on until it is flush with the lens barrel. Care should be taken not to push it against the zero mirror or to pinch the wires serving the zero mirror motor.

58. Record the factory assigned filter value in optical density in blank 23. This value is written on a data plate located on the front of the transceiver unit just to the lower left of the primary objective lens barrel.

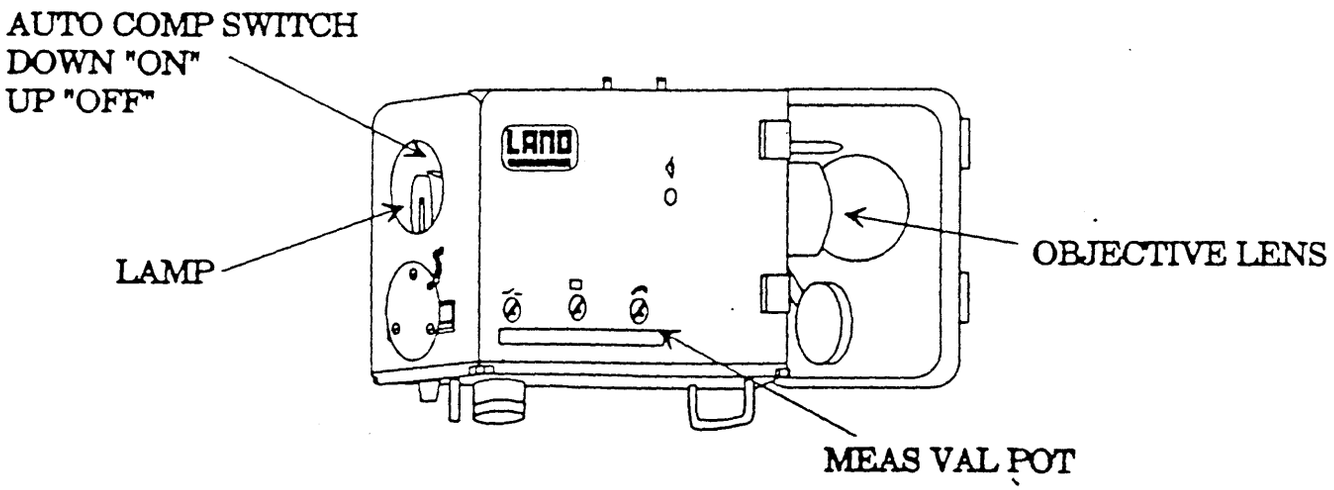


Figure 8-3. Land Combustion Model 3300 Transceiver with Lamp Access Cover Removed; exaggerated view of "AUTO COMP" Switch.

59. Adjust the audit jig iris to produce a 2 mA output current on the junction box meter. This adjustment simulates the COMS clear-path zero setting.

Note: The junction box meter is located in a gray plastic box mounted near the transceiver unit. The meter allows the auditor to get the jig zero value near the zero value on the data recorder. The final jig zero adjustments should be based on readings from the data recorder. The jig zero does not have to be exactly 0% opacity since the audit filter correction equations can account for an offset in the jig zero. A jig zero value in the range of 0-2% opacity is acceptable.

60. Record the audit filter serial numbers and opacity values in blanks 24, 25, and 26.

61. Remove the filters from their protective covers; inspect and, if necessary, clean them.

62. Record the jig zero value from the data recorder.

Note: The acquisition of monitor responses from the data recorder requires communication between the auditor at the transmissometer location and an assistant at the data recorder location.

63. Insert the low range neutral density filter into the audit jig.

64. Wait approximately two minutes or until a stable value has been recorded and displayed on the data recorder.

Note: The audit data should be taken from a data recording/reporting device that presents instantaneous opacity (or opacity data with the shortest available integration period).

65. Record the COMS response to the low range neutral density filter.

66. Remove the low range filter from the audit jig and insert the mid range neutral density filter.

67. Wait approximately two minutes and record the COMS response to the mid range neutral density filter.

68. Remove the mid range filter from the audit jig and insert the high range filter.

69. Wait approximately two minutes and record the COMS response to the high range neutral density filter.

70. Remove the high range filter, wait approximately two minutes, and record the jig zero value from the opacity data recorder.

Note: If the final jig zero value differs from the initial value by more than 1% opacity, the jig zero should be adjusted to agree with the initial value and the three-filter run (i.e., low, mid, and high) should be repeated.

71. Repeat steps 63 through 70 until a total of five opacity readings are obtained for each neutral density filter.

72. If six-minute integrated opacity data are recorded, repeat steps 62 through 70 once more, changing the waiting periods to 13 minutes.

73. Record the six-minute integrated data.

    Note: In order to acquire valid six-minute integrated opacity data, each filter must remain in the jig for at least two consecutive six-minute periods. The first period will be invalid since it was in progress when the filter was inserted. A waiting period of 13 minutes is recommended.

74. When the calibration error check is complete, remove the audit jig, close the protective cover on the junction box, and close the transceiver head.

    Note: If the zero compensation was defeated for the calibration error test ("AUTO COMP" switch moved to the "UP" position), the zero compensation circuitry must be reactivated by following steps 75 through 77. If the zero compensation circuitry was not defeated during the calibration error test, skip to step 78.

75. Remove the round lamp access cover from the back of the transceiver unit.

76. Move the "AUTO COMP" toggle switch to the "DOWN" position. DO NOT TOUCH THE MEASUREMENT LAMP.

    Note: The "AUTO COMP" toggle switch is mounted on the upper right-hand corner of the extinction (optical density) printed circuit board; access is difficult.

77. Replace the lamp access cover and secure the cover by tightening the three retaining screws.

78. Record whether the zero compensation function has been reactivated (YES or NO) in blank 27. "NO" should be entered in blank 27 if the zero compensation function was not deactivated for the calibration error test.

Reset Control Unit

79. Return to the control unit. Access the constants menu and return the calibration frequency, the output range 1, and the output range 2 settings to the values recorded in blanks 14, 15, and 16.

80. Obtain a copy of the audit data from the data recorder.

81. Transcribe the calibration error test results from the data recorder to blanks 28 through 53, and complete the audit data calculations.

### 8.1.3 Interpretation of Audit Results

This section is designed to help the auditor interpret the Land Model 4500 performance audit results. A general discussion of performance audit results is presented in section 2 of this manual.

#### Stack Exit Correlation Error Check

The path length correction errors in blanks 54 and 55 should be within ±2%. This error exponentially affects the opacity readings resulting in over or underestimation of the stack exit opacity. The most common error in computing the path length correction factor (OPLR) is the use of the flange-to-flange distance in place of the stack or duct inside diameter at the monitor location. This error will result in underestimation of the stack exit opacity and can be identified by comparing the monitor optical path length to the flange-to-flange distance. The flange-to-flange distance should be greater by approximately two to four feet.

#### Fault Lamp Analysis

Fault lamps are typically associated with parameters that the monitor manufacturer feels are critical to COMS function and to the collection of valid opacity data. When illuminated, the FAULT lamp on the Model 4500 indicates that one or more fault conditions have been detected by the instrument's self-diagnostic circuitry. Specific fault information can be output to the front panel meter of the control unit by accessing the auto test menu and scrolling through the fault messages. This is typical of the newer digital control units. It allows for increased sophistication of the self diagnostic circuitry without cluttering the face of the control unit with fault lamps that are rarely used. The COMS is not functioning properly if the FAULT lamp is illuminated.

#### Zero and Span Check

The internal zero and span errors (blank 57 and blank 59) should not exceed 4% opacity. A zero or span error in excess of 4% opacity may be due to excessive dust accumulation on the transceiver optics, miscalibration of the COMS, or an improperly named span filter. Dust accumulation on the transceiver optics sufficient to cause significant zero error will be accompanied by an excessive zero compensation value and an illuminated FAULT lamp. Other causes of zero and span errors are difficult to pinpoint during an audit.

If the zero and span errors are due to data recorder offset, both errors will be in the same direction and will be of the same magnitude.

#### Zero Compensation Check

The zero compensation function is designed to minimize the effects of dirty optics on the instrument output. The amount of dust on the transceiver exit window and zero mirror is quantified, in percent opacity, during each zero calibration cycle. The zero compensation value recorded in blank 60 should not exceed 4% opacity. If an excessive zero compensation value is due only to dust build up on the transceiver optics, it indicates that the purge air flow and/or the frequency of lens cleaning is insufficient to keep the transmissometer

optics clean. A negative zero compensation value, or a value that persists after thorough cleaning of the transceiver optics, indicates malfunctioning or improperly adjusted COMS electronics. The most common cause of negative zero compensation values is clear-path adjustment of the COMS when the optics are not clean. The zero compensation function takes into account any condition that causes the COMS output to deviate from 0% opacity when the zero mirror is read.

Optical Alignment

When the transceiver and retroreflector are misaligned, a portion of the measurement beam that should be returned to the measurement detector is misdirected, resulting in a positive bias in the data reported by the COMS. One of the most common causes of misalignment is vibration which may cause the on-stack components to shift slightly on the instrument mounting flanges. Another common cause of misalignment is thermal expansion and contraction of the structure on which the transmissometer is mounted. If the COMS is being audited while the unit is off-line (cold stack), the results of the alignment analysis may not be representative of the alignment of the instrument when the stack or duct is at normal operating temperature.

Transmissometer Dust Accumulation Check

The results of the duct accumulation check (blank 63) should not exceed 4% opacity. A dust accumulation value of more than 4% opacity indicates that the airflow of the purge system and/or the cleaning frequency of the optical surfaces are inadequate. When determining the optical surface dust accumulation, the auditor should note whether the effluent opacity is reasonably stable (within ±2% opacity) before and after the cleaning the optical surfaces. If the effluent opacity is fluctuating by more than ±2%, the dust accumulation analysis should be omitted.

Calibration Error Check

Calibration error results (blanks 73, 74, and 75) in excess of ±3% are indicative of a non-linear or miscalibrated instrument. However, the absolute calibration accuracy of the monitor can be determined only when the instrument clear-path zero setting is known. If the zero and span data are out-of-specification, the calibration error data will often be biased in the same direction as the zero and span errors. Even if the zero and span data indicate that the COMS is calibrated properly, the monitor may still be inaccurate due to error in the clear-path zero adjustment. The optimum calibration procedure involves using neutral density filters during a clear-stack or off-stack COMS calibration. This procedure would establish both the absolute calibration accuracy and linearity of the COMS. If this procedure is impractical and it is reasonable to assume that the clear-path zero is set correctly, the monitor's calibration can be set on-stack using either the neutral density filters or the internal zero and span values.

# 9. PERFORMANCE AUDIT PROCEDURES FOR DATATEST MONITORS

## 9.1 DATATEST MODELS 900A AND 900RM

### 9.1.1 COMS Description

The Model 900A consists of three major components: the transmissometer, the air purge system, and the control unit. The transmissometer consists of a transmitter mounted on one side of the stack or duct and a receiver mounted on the other side. The transmitter contains the light source and a perforated disc which rotates to produce the reference, measurement, zero, and span signals. The receiver contains the photodetector and the optical alignment sight. The transmissometer is equipped with fiber optic cables used to transmit the optical reference and calibration signals from the transmitter to the detector in the receiver unit. Strategic configuration of the fiber optic cable used to transmit the reference signal allows the instrument to monitor lens dusting of the stack-mounted components.

The on-stack components are equipped with air blowers that flood the cavities within the instrument mounting flanges with filtered ambient air. The air purging system serves a threefold purpose: (1) it provides an air window to keep the exposed optical surfaces clean; (2) it protects the optical surfaces from condensation of effluent moisture; and (3) it minimizes thermal conduction from the stack to the instrument. A typical installation has separate purge air systems for the transceiver and retroreflector assemblies.

The Model 900A control unit converts the single-pass transmittance of the receiver to linear optical density corrected to stack exit conditions. The resultant stack exit optical density is converted to instantaneous stack exit opacity. The control unit is also capable of integrating instantaneous opacity data into six-minute data averages.

The Model 900RM[1] is a double-pass transmissometer. The transceiver contains a light source, a chopper, mirrors, lenses, and a detector. The retroreflector contains only a mirror. A measurement beam produced in the transceiver is projected across the stack or duct to the retroreflector. The retroreflector returns the measurement beam to the transceiver where a beam splitter diverts the measurement beam to the detector. The resultant transceiver output is proportional to double-pass transmittance of the effluent.

The Model 900RM control unit is essentially identical to that of the Model 900A. The control unit converts the transceiver output to units of either instantaneous or six-minute averaged stack exit opacity.

The transmissometer converts the amount of light received by the detector after the light has passed through the effluent to a measurement signal and converts the amount of light transmitted by the light source to a reference signal. The ratio of the measurement and reference signals is processed into a

[1] The model number of the DataTest 900RM COMS has been changed to 900RMD.

signal that represents double-pass (single-pass for the Model 900A) transmittance of the effluent at the transmissometer location. The control unit uses the effluent transmittance to calculate "path" optical density, or the optical density of the effluent at the transmissometer location. In order to provide stack exit opacity data, the path optical density must be corrected to stack exit conditions. The correction factor is calculated as the ratio of the stack exit inside diameter to the inside diameter of the stack or duct at the transmissometer location. This ratio is called the "stack exit correction factor." The stack exit correction factor is preset within the control unit circuitry by the manufacturer. The following equations illustrate the relationship between the stack exit correction factor, path optical density, and stack exit opacity:

$$\frac{L_x}{L_t} = \text{stack exit correction factor}$$

where: $L_x$ = stack exit inside diameter

$L_t$ = stack inside diameter or duct width at the transmissometer location

$$OP_x = \left[1 - 10^{-(L_x/L_t)(OD)}\right] \times 100$$

where: $OP_x$ = stack exit opacity (%)

OD = optical density measured by the transmissometer

### 9.1.2 Performance Audit Procedures

Preliminary Data

1. Obtain the stack exit inside diameter and the inside diameter of the stack or duct at the transmissometer location. Record these values in blanks 1 and 2 of the Dataset Audit Data Sheet.

   Note: Effluent handling system dimensions may be acquired from the following sources listed in descending order of reliability: (1) physical measurements; (2) construction drawings; (3) opacity monitor installation/certification documents; and (4) source personnel recollections.

2. Calculate the stack exit correction factor (divide the value in blank 1 by the value in blank 2). Record the result in blank 3.

3. Record the source-cited stack exit correction value in blank 4.

   Note: The stack exit correction factor is preset by the manufacturer using information supplied by the source. The value recorded in blank 4 should be the value source personnel agree should be set inside the monitor. Typically, this value is cited from monitor installation data, monitor certification data, or continuous opacity monitoring system (COMS) service reports.

4. Obtain the reference zero and span calibration values. Record these values in blank 5 and blank 6, respectively.

   Note: These values are set during monitor calibration and may not be equal to the values recorded at COMS installation and/or certification. Records of the zero and span values resulting from the most recent monitor calibration should be kept by source personnel.

5. Inspect the opacity data recorder (strip chart or computer) to ensure proper operation. Annotate the data record with the auditor's name, affiliation, plant, unit, date, and time.

Fault Lamp Checks

The following steps describe the fault lamp analysis for the Datatest 900A and 900RM control units. Unless otherwise noted, the audit analysis can continue with illuminated fault lamps, provided the source has been informed of the fault conditions.

6. Record the status (On or Off) of the LAMP OUT fault lamp in blank 7.

   Note: An illuminated LAMP OUT fault lamp indicates that the lamp output has been reduced by more than 50%. This could have a dramatic effect on the accuracy of the opacity data and should be repaired immediately.

7. Record the status (On or Off) of the BLOWER OUT fault lamp in blank 8.

   Note: Illumination of the BLOWER OUT fault lamp indicates that the purge air system is not functioning. This failure requires immediate attention because effluent moisture and particulate will attack the exposed monitor optics.

8. Record the status (On or Off) of the OVER EMISSION fault lamp in blank 9.

   Note: Illumination of the OVER EMISSION fault lamp indicates that the stack exit opacity has exceeded a value selected by the source. This may indicate the onset of a period of excess emissions.

9. Record the status (On or Off) of the MAINTENANCE fault lamp in blank 10.

   Note: Illumination of the MAINTENANCE fault lamp indicates the stack exit opacity has exceeded a value set by the source. The MAINTENANCE fault lamp is typically adjusted to a lower set point than the OVER EMISSION fault lamp to provide an intermediate indication of elevated effluent opacity.

10. Record the status (On or Off) of the 4 percent DUST fault lamp in blank 11.

    Note: Illumination of the 4 percent DUST fault lamp indicates that the amount of lens dusting on the optics of the transceiver (Model 900RM) or the transmitter and receiver (Model 900A) exceeds the equivalent of 4 percent opacity. At this level of dust accumulation, federal standards (40 CFR Part 60.13(d)) require that the transmissometer optics be cleaned.

Control Unit Checks

Stack exit correction factor measurement (optional).

Note: This measurement can be made only on Model 900 monitors equipped with an updated PC-2 circuit board which has test terminals TP-1 and TP-2. If the COMS is not equipped with the necessary test terminals, skip this step and write "N/A" (not applicable) in blank 12.

11. Open the control unit and connect a voltmeter across terminals TP-1 (ground) and TP-2 on the PC-2 circuit card. Measure the millivolt output and divide it by 1000 to yield the stack exit correction factor ($L_x/L_t$) set within the monitor. Record this value in blank 12.

Zero Check

12. Turn the "zero calibration" switch inside the control unit to the "on" position.

13. Record the zero calibration value from the panel meter in blank 13.

14. Record the value from the opacity data recorder in blank 14.

Lens Dusting Check (Initial)

Note: This check can only be conducted on Model 900 monitors equipped with an updated PC-5 circuit card that has a TP-3 terminal. If the COMS is not equipped with the necessary test terminal, write N/A in blank 15.

15. Measure the voltage at TP-3 on PC-5 in millivolts.

16. Divide this millivolt value by 100 and record the result in blank 15. This value is the lens dusting in percent opacity.

17. Turn the zero calibration switch to the "Off" position.

Span Check

18. Turn the "span calibration" switch to the "on" position.

19. Record the span calibration value from the panel meter in blank 16.

20. Record the value from the opacity data recorder in blank 17.

21. Turn the "span calibration" switch to the "Off" position.

22. Go to the transmissometer location.

Retroreflector (or Receiver) Dust Accumulation Check

23. Record a pre-cleaning effluent opacity value from the opacity data recorder in blank 18.

24. Open the Model 900 RM retroreflector. Inspect and clean the optical surfaces, and close the retroreflector. (If auditing the Model 900A, inspect and clean the detector optics and fiber optics dust monitor.)

25. Record the post-cleaning effluent opacity value from the opacity data recorder in blank 19.

Transceiver (or Transmitter) Dust Accumulation Check

26. Record a pre-cleaning effluent opacity value from the opacity data recorder in blank 20.

27. Open the transceiver or transmitter. Inspect and clean the primary lens and the fiber optics dust monitor and close the transceiver or transmitter.

28. Record the post-cleaning effluent opacity value from the opacity data recorder in blank 21.

Optical Alignment Check - Model 900RM

29A. Remove the silicon cell detector from the transceiver and install the alignment bull's eye in its place. Note the position of the image of the measurement beam with respect to the cross hairs. Remove the bull's eye and reinstall the detector.

30A. Indicate whether the image of the measurement beam is centered on the alignment reticle in blank 22.

Optical Alignment Check - Model 900A

29B. Swing the 0.010-in. aperture in the transmitter into position and look through the alignment port at the back of the detector housing. Note the position of the measurement beam image with respect to the cross-hairs. Swing the 0.010-in. aperture back to its original position.

30B. Indicate whether the image of the measurement beam is centered on the alignment reticle in blank 22.

Calibration Error Check - Model 900RM (Jig Procedure)

31. Open the transceiver and install the audit jig.

32. Install the clear hole filter and adjust the jig until a zero value between 0% and 2% opacity is read on the opacity data recorder.

33. Record the audit filter data in blanks 23, 24, and 25.

34. Remove the audit filters from their protective covers. Inspect and clean each filter.

35. Alternately insert the low, mid, and high range audit filters into the audit jig. Wait approximately two minutes per filter for a clear response to be recorded and displayed on the data recorder.

36. Check the jig zero value after each run of filters (low, mid, and high). If the zero setting changes by more than 1% during any of the runs, adjust the zero to the original value and repeat the run.

37. Repeats steps 35 and 36 until a total of five opacity readings are obtained for each audit filter.

38. If six-minute integrated opacity data are recorded, repeat steps 35 and 36 once more, changing the waiting periods to 13 minutes.

39. Remove the audit jig and close the transceiver.

40. Return to the control unit location.

41. Record the calibration error data from the opacity data recorder in blanks 27 through 52.

Lens Dusting Check (Final)

Note: This check can only be conducted on Model 900 monitors equipped with an updated PC-5 circuit card that has a TP-3 terminal. If the COMS is not equipped with the necessary test terminal, write "N/A" in blank 26.

42. Turn the "zero calibration" switch to the "On" position.

43. Measure the voltage at TP-3 on PC-5 in millivolts.

44. Divide this millivolt value by 100, and record the result in blank 26. This value is the lens dusting in percent opacity.

45. Turn the "zero calibration" switch to the "Off" position.

Calibration Error Check - Model 900A (Incremental Procedure)

Note: Auditing the Model 900A transmissometer requires the use of an incremental calibration error procedure. If the effluent opacity is fluctuating by 4% or more, the incremental procedure cannot be used and the calibration error check cannot be performed.

I-31. Open the transmitter and install the audit jig.

I-32. Record the audit filter data in blanks I-23, I-24, and I-25.

I-33. Remove the audit filters from their protective covers. Inspect and clean each filter.

I-34. Install the clear hole filter and record the effluent opacity.

I-35. Insert the low filter into the jig. Wait approximately two minutes for a clear response to be displayed and recorded on the opacity data recorder.

I-36. Remove the filter and install the clear hole filter. Read the effluent opacity and install another filter.

I-37. Repeat steps I-34 through I-36 until a total of five opacity readings are obtained for each audit filter.

I-38. If six-minute integrated opacity data are recorded, repeat steps I-34 through I-36 once more, changing the waiting periods to 13 minutes.

I-39. Remove the audit jig and close the transmitter.

I-40. Return to the control unit location.

I-41. Record the calibration error data from the opacity data recorder in blanks I-26 through I-63.

Lens Dusting Check (Final)

Note: This check can only be conducted on Model 900 monitors equipped with an updated PC-5 circuit card that has a TP-3 terminal. If the COMS is not equipped with the necessary test terminal, write "N/A" in blank 26.

42. Turn the "zero calibration" switch to the "On" position.

43. Measure the voltage at TP-3 on PC-5 in millivolts.

44. Divide this millivolt value by 100, and record the result in blank 26. This value is the less dusting in percent opacity.

45. Turn the "zero calibration" switch to the "Off" position.

### 9.1.3 Interpretation of Audit Results

This section is designed to help the auditor interpret the Datatest COMS performance audit results. A general discussion of performance audit results is presented in Section 2 of this manual.

Stack Exit Correlation Error Check

The path length correction errors in blanks 53 and 54 should be within ±2%. This error exponentially affects the opacity readings resulting in over or underestimation of the stack exit opacity. The most common error in computing the path length correction factor (OPLR) is the use of the flange-to-flange distance in place of the stack or duct inside diameter at the monitor location. This error will result in an underestimation of the stack exit opacity and can be identified by comparing the monitor optical path length to the flange-to-flange distance. The flange-to-flange distance should be greater by approximately two to four feet.

Fault Lamp Analysis

Fault lamps are typically associated with parameters that the monitor manufacturer feels are critical to COMS function, and to the collection of valid opacity data. The parameters associated with each of the fault lamps found on the Datatest control unit are discussed in the audit procedures. With the

exception of lamps that warn of elevated opacity levels (alarm or warning lamps), an illuminated fault lamp indicates that the COMS is not functioning properly.

Zero and Span Check

The internal zero and span errors (blank 56 and blank 58) should not exceed 4% opacity. A zero or span error in excess of 4% opacity may be due to excessive dust accumulation on the transceiver optics, misgalibration of the COMS, or an improperly named span filter. Dust accumulation on the transceiver optics sufficient to cause significant zero error will be accompanied by an excessive lens dusting value and an illuminated 4% dust lamp. Other causes of zero and span errors are difficult to pinpoint during an audit.

If the zero and span errors are due to data recorder offset, both errors will be in the same direction and will be of the same magnitude.

Zero Compensation Check

The zero compensation function is designed to minimize the effects of dirty optics on the instrument output. The zero compensation value recorded in blanks 59 and 60 should not exceed 4% opacity. If an excessive zero compensation value is due only to dust build up on the transceiver optics, it indicates that the purge air flow and/or the frequency of lens cleaning is insufficient to keep the transmissometer optics clean. A negative zero compensation value, or a value that persists after thorough cleaning of the transceiver optics, indicates malfunctioning or improperly adjusted COMS electronics. The most common cause of negative zero compensation values is clear-path adjustment of the COMS when the optics are not clean.

Optical Alignment

When the transceiver and retroreflector are misaligned, a portion of the measurement beam that should be returned to the measurement detector is misdirected, resulting in a positive bias in the data reported by the COMS. One of the most common causes of misalignment is vibration which may cause the on-stack components to shift slightly on the instrument mounting flanges. Another common cause of misalignment is thermal expansion and contraction of the structure on which the transmissometer is mounted. If the COMS is being audited while the unit is off-line (cold stack), the results of the alignment analysis may not be representative of the alignment of the instrument when the stack or duct is at normal operating temperature.

Transmissometer Dust Accumulation Check

The results of the dust accumulation check (blank 63) should not exceed 4% opacity. A dust accumulation value of more than 4% opacity indicates that the airflow of the purge system and/or the cleaning frequency of the optical surfaces are inadequate. When determining the optical surface dust accumulation, the auditor should note whether the effluent opacity is reasonably stable (within ±2% opacity) before and after the cleaning the optical surfaces. If the effluent opacity is fluctuating by more than ±2%, the dust accumulation analysis should be omitted.

Calibration Error Check

Calibration error results (blanks 73, 74, and 75 or blanks I-91, I-92, and I-93) in excess of ±3% are indicative of a non-linear or miscalibrated instrument. However, the absolute calibration accuracy of the monitor can be determined only when the instrument clear-path zero setting is known. If the zero and span data are out-of-specification, the calibration error data will often be biased in the same direction as the zero and span errors. Even if the zero and span data indicate that the COMS is calibrated properly, the monitor may still be inaccurate due to error in the clear-path zero adjustment. The optimum calibration procedure involves using neutral density filters during a clear-stack or off-stack COMS calibration. This procedure would establish both the absolute calibration accuracy and linearity of the COMS. If this procedure is impractical and it is reasonable to assume that the clear-path zero is set correctly, the monitor's calibration can be set on-stack using either the neutral density filters or the internal zero and span values.

# SECTION 10

## PERFORMANCE AUDIT PROCEDURES FOR COMS WITH COMBINERS

The audit procedures described in the previous sections of this manual presume that the continuous opacity monitoring system (COMS) includes only a single transmissometer installed to view the total emissions from a source. However, at many sources, the COMS includes multiple transmissometers which are installed to view separate effluent streams that are subsequently combined and released to the atmosphere through a common stack. This situation is encountered frequently in the electric utility industry where the boiler effluent is often routed through twin preheaters, twin ESPs, and twin I.D. fans before being recombined in a single exhaust stack. At many such sources, transmissometers are installed in each duct to facilitate use of the monitoring data for control equipment evaluation and to provide convenient access to the transmissometers for maintenance and quality assurance activities.

COMS's with multiple transmissometers include analog or digital devices that automatically determine the equivalent stack-exit opacity for the entire effluent stream based on the individual opacity measurements provided by the transmissometers. These devices are typically referred to as "combiners." The combiner device may be a separate device or may incorporate some or all of the functions normally associated with the standard control unit.

Performance audits of COMS's with combiners necessitate the use of modified audit procedures. However, these procedures rely heavily on the monitor-specific procedures detailed in Sections 3 through 9 of this manual. This section describes a generic approach for conducting audits of opacity COMS's with combiners. The approach requires that the auditor evaluate (1) the ability of each transmissometer to provide accurate and precise effluent opacity measurements at their respective monitoring locations, and (2) the accuracy of the stack-exit opacity values recorded by the COMS. To accomplish this, the auditor must first conduct evaluations of the individual transmissometers using standard audit procedures. Minor procedural modifications may be necessary to accommodate equipment differences between combiner and single transmissometer monitoring systems. After the audits of the individual transmissometers are completed, the accuracy of the combiner system is determined using either a one-point or a multi-point audit technique, depending on the type of monitoring system being audited.

### 10.1 CALCULATION OF STACK-EXIT OPACITY FOR COMBINER SYSTEMS

Both the single-point and multi-point audit techniques require the calculation of "correct" or "expected" stack-exit opacity values as a function of the opacity at each monitoring location. The appropriate equations for calculating the stack-exit opacity values depend on source-specific conditions. Several equations ranging from the most general approach to commonly applicable simplifications are presented below. The auditor must select the form of equation which is appropriate for the particular situation. It is generally recognized that the various methods for calculating the stack-exit opacity involve some assumptions which are not necessarily accurate under all

conditions. The calculation method selected should be consistent with the design and implementation of the opacity monitoring program at the facility being audited.

The general relationship between multiple duct mounted transmissometer measurements and stack-exit opacity values is most conveniently expressed in units of optical density. (Conversions between opacity and optical density will be discussed later.) The relationship is based on conservation of mass and an assumed linear relationship between the optical density and the mass concentration of the aerosol. The relationship for double-pass transmissometers is described by Equation (10-1):

where:

Equation 10-1

$$V_E A_E K_E \frac{OD_E}{L_E} = \sum_{i=1}^{n} V_i A_i K_i \frac{OD_i}{2L_i}$$

V = average velocity at measured location or stack-exit
A = cross-sectional area at measurement location or stack-exit
K = idealized constant relating optical density to mass concentration
OD = optical density (single pass)
L = measurement path length (e.g., internal duct dimension or stack exit internal diameter)

subscripts:

E = stack-exit location
i = transmissometer locations; 1,2,...n

In practice, the value of the idealized constant "K" cannot be determined. It is a function of particle size distribution and other aerosol characteristics that vary over time. Since the effluent at each of the monitoring locations is emitted from a common source (a single boiler), it is reasonable to assume that the aerosol characteristics at each monitoring location and at the stack exit are similar at any given point in time. This assumption (i.e., $K_E = K_1 = K_2 = K_n$) allows the factor K to be eliminated from Equation 10-1.

Additional simplifications of the general equation are possible when the monitoring locations are geometrically similar. This is most often the case where twin ducts/monitoring locations are mirror images of each other. For the case of two monitoring locations with identical duct cross sections (i.e., $L_1 = L_2 = L$ and $A_1 = A_2 = A$). The general equation becomes:

Equation 10-2

$$OD_E = \frac{A}{2L} \quad \frac{L_E}{V_E\ A_E} \quad (V_1\ OD_1 + V_2\ OD_2)$$

Assuming any temperature and pressure differences between the monitoring locations and the stack exit are insignificant, and that there is no significant air inleakage, the effluent flow variable can be expressed as:

Equation 10-3

$$V_E\ A_E = A\ (V_1 + V_2)$$

Thus:

Equation 10-4

$$OD_E = \frac{L_E\ (V_1 OD_1 + V_2 OD_2)}{2L\ (V_1 + V_2)}$$

In most cases, measurement of the velocity or volumetric flow rate at the transmissometer installation locations is not attempted. If the flow rates can be assumed to be equal in both ducts (i.e., $V_1 = V_2$), Equation (10-4) can be simplified to the most commonly used form:

Equation 10-5

$$OD_E = \frac{L_E\ (OD_1 + OD_2)}{2L \qquad 2}$$

A filter inserted in the light path at the monitoring location attenuates the light beam twice in a double pass transmissometer; thus:

Equation 10-6

$$OD_N = 2\ OD_{FN}$$

where:

$OD_{FN}$ = single pass optical density of the filter inserted at the N monitoring location

Thus:

Equation 10-7

$$OD_E = \frac{L_E}{2L}\ (OD_{F1} + OD_{F2})$$

For Lear Siegler monitors, the factor LE/2L is referred to as the "OPLR." For Thermo Environmental Instruments monitors (formerly Contraves-Goerz monitors)

the term LE/L is referred to as the "STR." These terms are useful for modifying the above equations to be consistent with the manufacturer's technology.

Equations (10-2), (10-4), and (10-5) may be used to calculate the optical density at the stack-exit based on the optical density measured by multiple transmissometers under the conditions described above. Equation (10-7) may be used to calculate the optical density at the stack-exit based on the single pass optical density values of calibration attenuators inserted into the transmissometer light beams under the specified conditions. Many other combinations and arrangements of the above equations are possible. In any case, the equation selected should yield the optical density at the stack-exit as a function of the optical density at each monitoring location. The optical density values are easily converted to units of opacity as follows:

$$\text{Opacity}_E = 1 - 10^{-OD_E} \qquad \text{Equation 10-8}$$

Conversely, if the opacity values at the monitoring location are known, the optical density values can be calculated as follows:

$$OD_E = -\log_{10}(1-\text{Opacity}_E) \qquad \text{Equation 10-9}$$

## 10.2 GENERAL AUDIT PROCEDURES

### 10.2.1 Audit Procedures for Individual Duct Transmissometers

Performance audits of each duct-mounted transmissometer must be conducted using the standard audit procedures for single transmissometer COMS's. These audits are straightforward if each transmissometer is provided with a separate control unit and data recording device. However, if the control unit or data recording device is time shared between several transmissometers, or if the control unit functions are incorporated into the combiner unit, some modifications to the standard audit procedures may be necessary in order to isolate the individual monitors and obtain access to the appropriate signals and responses. The auditor may need to refer to the operator's manual or seek assistance from source personnel familiar with the COMS to obtain the necessary data.

As an example of the above considerations, the applicable procedural modifications for the Lear Siegler Model 622 Emission Monitor Combiner and two RM-41 duct-mounted transmissometers are described here. The reader is cautioned that these procedures are not necessarily applicable to other opacity COMS's with combiners. The analog combiner also serves as the control unit for both transmissometers and contains several features not included on the typical RM-41 control unit. The two most important are:

(a) the analyzer switch - located on the front panel, this switch allows selection of measurements from: analyzer #1, analyzer #2, or "stack-exit" values, and

(b) the out-of-service switch - located inside the combiner control unit on the upper right hand side of the card rack. This switch allows either the A or B side monitors to be taken out of service. The remaining monitor will function normally.

To obtain meaningful audit data, the "analyzer" and "out-of-service" switches must be configured correctly. The most important considerations are as follows:

- Fault Lamps - With the analyzer switch in the "exit" position, any fault condition existing for either monitor should result in the illumination of the appropriate fault lamp. The fault lamp will flash when the analyzer switch is positioned to the monitor number in which the fault has occurred.

- Reference current, zero compensation, or input current measurements are obtained by placing the measurement switch in the proper position (same procedure as used for single RM-41 applications). The analyzer switch must be placed in the position corresponding to the individual monitor for which these measurements are desired. Measurements of test functions (e.g., reference current, zero compensation, or input current) are not meaningful if the analyzer switch is left in the "exit" position.

- To obtain stack-exit opacity measurements from the panel meter, the analyzer switch must be placed in the "exit" position. To obtain the combined stack-exit opacity, both the A- and B-side monitors must remain in service. To obtain the stack-exit opacity for either the A- or B-side monitors independently, the alternate monitor must be removed from service. When either monitor is removed from service, the information recorded on the strip chart represents the independent stack-exit opacity for the monitor remaining in service.

For all COMS's with combiners, the zero and span errors can usually be determined for either transmissometer independently or for the combined measurement system. Source personnel will usually evaluate the day-to-day operation of the COMS by observing the combined system calibration and will check the calibration of each monitor individually when excessive drift and/or other problems are indicated. Although a check of the zero and span errors for each transmissometer provides the best calibration drift information, the results of a combined system calibration provide an adequate assessment of performance when the total zero or span drift is small. It is extremely unlikely that a major zero or span shift in one monitor would be completely offset by an opposite and equal shift in the other monitor. Thus, it is very unlikely that a combined system calibration value would disguise problems with either or both monitors. It is recommended that the auditor perform zero and span error determinations for the combined system, and perform additional zero and span error checks for each transmissometer when the errors observed for the combined system calibration exceed $\pm 1$ percent opacity.

### 10.2.2 Audit Procedures for Combiner Stack-Exit Opacity Values

After evaluating the performance of the individual transmissometers, the auditor must evaluate the accuracy of the combiner stack-exit opacity values. Two approaches are described below: the single-point check method and the multi-point check method. For computerized data acquisition systems, the single-point check is sufficient to detect programming errors. The single-point check may also be used for "screening checks" of analog systems; if problems are indicated, a multi-point check can be performed. The multi-point check should be used to evaluate the performance of analog combiner systems over the full range of operating conditions.

(1) Single-Point Check - The single-point check is the simplest method of checking the operations of the combiner device. The procedure requires that the auditor (1) determines the outputs of all of the duct-mounted transmissometers for any convenient time period (e.g., simultaneous instantaneous measurements or six-minute averages), (2) calculates the "expected" stack-exit opacity values using the appropriate equations in Section 10.1, and (3) compares the expected values to the opacity values indicated by the COMS permanent data recorder. The combiner responses and expected values should agree within ±3 percent opacity. (If periods with varying opacity levels are available, the single-point check procedure may be repeated to provide a multi-point evaluation of the combiner operation.)

(2) Multi-Point Check - For a COMS with two duct-mounted transmissometers, the multi-point check requires the use of two audit devices and two sets of audit filters. Additional audit devices and filter sets are needed if the COMS includes more than two transmissometers; however, the multi-point check method becomes overly cumbersome in such situations. In order to conduct the test in a practical manner, the assistance of several people is necessary. Typically, one person at each monitoring location and one person at the combiner location are needed.

The multi-point check procedure involves: (1) installation of audit devices on both transceivers, (2) adjustment of the audit device offsets to obtain the correct zero response for each monitor independently, (3) placing various combinations of audit filters in the two monitors to simulate varying opacity levels at the two monitoring locations, (4) calculation of the "expected" stack exit opacity for each combination of filters using the equations in Section 10.1, and (5) comparing the calculated "expected" values to the actual combined stack exit opacity values provided by the COMS. A multi-point check of a combiner with two transmissometers involves 16 sets of measurements since zero, low-, mid-, and high-range filters are used at each monitoring location. Therefore, it is important that instantaneous or 1-minute averages of the combiner responses be obtained for the multi-point check. Again, the combiner responses and the corresponding expected values should agree within ±3 percent opacity.

# SECTION 11

# ZERO ALIGNMENT CHECKS

The zero alignment of a continuous opacity monitoring system (COMS) is the response of the COMS to the daily zero and span check relative to the COMS response to an actual clear-path zero condition. The zero alignment is important because the daily assessment of the COMS calibration is based on the simulated, rather than the actual clear-path zero check.

The technical complexity and amount of time required to check the zero alignment places a check of this parameter beyond the scope of a performance audit. Although not included as part of the audit procedures, the importance of the zero alignment in obtaining a representative assessment of COMS accuracy warrants discussion of generic alignment procedures in this document. Several approaches to conducting zero alignment checks are presented in Sections 11.1 through 11.3.

## 11.1 OFF-STACK ZERO ALIGNMENT

Performance Specification 1 (40 CFR 60) requires that an off-stack zero alignment of the COMS be performed prior to installing the transmissometer at the monitoring location. The procedures for conducting this check are described briefly in Section 7.1.1 of that specification. In short, the procedures require that the transmitter and receiver (single pass systems), or transceiver and reflector (double pass systems), be set up in a laboratory or other opacity-free environment such that the COMS measurement path length equals the path length obtained when the components are installed on the stack or duct. The distance separating the "on stack" components during the zero alignment check is the flange-to-flange distance or the actual distance between optical components, rather than the duct or stack internal diameter at the monitoring location. After establishing the proper component separation, the optical alignment is optimized, the path length correction factor is set, and the necessary zero and span adjustments are made to assure proper calibration of the system. Following the successful completion of these steps, the zero alignment is performed by setting the COMS response to the simulated zero equal to the COMS clear-path zero response.

The off-stack zero alignment check can be repeated after the COMS has been installed and operating for some time; however, this approach is inherently very cumbersome and time consuming. Typically, the transceiver must be disconnected from the control unit, and both the transceiver and reflector components must be transported to a clean environment. In order to evaluate the entire system, the control unit and data recording device must also be removed and transported to the test location. Substitute signal and power cables and test stands must be fabricated or obtained to allow the various components to be electrically reconnected and set-up at the test location. In addition, precautions must be taken to ensure that ambient dust levels and other potential interferents are minimized while the tests are performed.

When the off-stack zero alignment is completed, each of the COMS components must be electrically disconnected, transported back to the measurement location, mechanically reinstalled, and electrically reconnected. The optical alignment of the transceiver and reflector components must be reestablished or, at least, verified to complete the procedure. All of the above activities must be performed with extraordinary care to ensure that the off-stack zero alignment procedure provides a reasonable assurance of accuracy. Nevertheless, there is always a chance that transporting the transceiver to the monitoring location and/or reinstallation activities will adversely impact the accuracy of the zero alignment procedure. Many source personnel believe that the likelihood of such problems are much greater than the likelihood that the zero alignment has shifted, and are therefore hesitant to attempt off-stack zero alignment checks.

## 11.2 ON-STACK ZERO ALIGNMENT

Performance Specification 1 recognizes the difficulties and problems associated with the off-stack zero alignment approach. Section 7.2.1 (optical and zero alignment) of Performance Specification 1 requires that the optical alignment and the zero alignment performed prior to installation be verified and adjusted, if necessary, when the facility is not operating and "clear stack" conditions exist. If the facility is operating at the time the COMS is installed, Performance Specification 1 requires that the zero alignment be verified the first time a clear stack condition is obtained after the operational test period is completed.

The on-stack zero alignment approach avoids virtually all of the problems associated with the off-stack procedure. However, the on-stack procedure requires that clear stack conditions be present in order to accomplish the zero alignment procedure. Two major problems are commonly encountered. First, some sources such as major base-loaded electric utility steam generating units operate nearly continuously with very infrequent outages. These units may operate continuously except for emergency outages and a one or two week annual maintenance outage per year. For such units, the maintenance and repair activities that must be performed on the boiler and control equipment during the outage requires substantial overtime work by the same personnel who typically service and calibrate the monitoring equipment. Therefore, it is unlikely that the zero alignment of the COMS can be performed at such sources. The problem is compounded when several units are served by a single opacity monitor installed on a common stack since it is unlikely that all of the units will be off-line simultaneously.

The second problem associated with the on-stack zero alignment procedure relates to the presence of residual opacity when the source is not operating. At many sources, clear stack conditions do not occur at the monitoring location when the facility is not in operation. Residual opacity may exist because of (1) boiler, air heater, ESP, or duct maintenance being conducted with the fans running at a low rate to protect personnel, (2) fan operation or natural draft conditions resulting in aspirated material remaining in the ducts, stack, or control equipment for long periods after the facility is off-line, or (3) rain or other precipitation entering the stack. For many sources, residual effluent opacities are greater than the opacity observed during operation since the control equipment is not operated during unit outages.

The presence of residual opacity during an on-stack zero alignment check will result in the simulated zero device being set at the level of the residual opacity rather than at the zero opacity level. For most COMS's this error will bias all subsequent opacity measurements low by the amount of the residual opacity present in the stack when the adjustment was made. Therefore, it is fundamentally important to determine if residual opacity is present before performing an on-stack zero alignment check. Performance Specification 1 recommends that the instantaneous output of the COMS be examined to determine whether fluctuations from zero opacity are occurring before a clear-path condition is assumed to exist. Visible emission observations may also be performed to detect residual opacity; however, it should be kept in mind that effluent opacities of less than 5 percent are nearly impossible for the human observer to detect. In addition, the on-stack zero alignment procedures should not be performed during periods of precipitation for stack-mounted transmissometers. Condensed moisture (rain, steam, fog, etc.) will be read as effluent opacity by the COMS.

Finally, if an on-stack zero alignment is performed, the optical alignment should be checked and all optical surfaces should be cleaned before adjusting the simulated zero level. After the zero alignment procedure is completed and the facility is again operating, the optical alignment should be rechecked since thermal expansion is likely to affect the optical alignment.

## 11.3 ALTERNATE ZERO ALIGNMENT APPROACHES

Alternate approaches for conducting the zero alignment checks are available for some COMS's. The applicability of these procedures depends on monitor- and source-specific constraints.

For certain monitors such as the DIGI 1400 (formerly manufactured by Environmental Data Corporation) that combine the COMS with the $SO_2$, $NO_x$, and $CO_2$ monitoring channels and also include a "zero-pipe," the zero alignment procedure is quite simple. For these systems, the zero-pipe can be closed so that the flow of effluent through the slotted tube is obstructed and the measurement path is filled with filtered air from the purge air system. Thus, each time the zero pipe is closed, the zero alignment can be checked and adjusted, if necessary, under clear-path conditions.

Another approach is often available for COMS's which allow access for cleaning of the transceiver and reflector windows through a hinged support system. For many of these types of COMS's, zero alignment checks can be performed at the monitoring location without electrically disconnecting the transceiver. The following procedures are followed when this approach is applicable:

(1) The transceiver is opened as when cleaning the optical window.

(2) The reflector is opened and removed from its hinges; the optical alignment adjustment bolts must not be disturbed.

(3) All external optical surfaces of the transceiver and reflector components are thoroughly cleaned.

(4) The reflector is mounted on a test stand at the appropriate distance from the transceiver as shown in Figure 11-1. (This is most easily accomplished using a zero alignment jig which maintains the correct separation distance between the transceiver and retroreflector, and prevents interference from ambient dust or precipitation. It is often convenient to orient the measurement path tangent to the outside of the stack or duct.)

(5) Correct optical alignment is established and verified through direct observation of the light beam on the reflector surface and by means of the transmissometer optical alignment sight.

(6) If necessary, appropriate adjustments are made to establish the accuracy of the transmissometer calibration in accordance with the manufacturer's instructions.

(7) The zero alignment is checked and adjusted, if necessary, in accordance with the procedures specified by the manufacturer.

(8) The reflector is reinstalled on its hinges, and both the reflector and transceiver are closed and returned to normal operation. The optical alignment must be rechecked and, if necessary, adjusted.

This procedure avoids the problems associated with both the off-stack and on-stack zero alignment procedures. However, problems in maintaining the exact separation distance and optical alignment during the zero alignment check can be encountered due to spatial constraints, physical limitations, and the presence of extreme vibration at the monitoring location. In some cases. spatial limitations can be overcome by removing the transceiver from its hinges to allow greater freedom in orienting the light path in a convenient direction. For example, the alternate zero alignment approach can sometimes be used for COMS's installed in the annular space between the stack liner and stack shell by orienting the light path vertically, parallel to the access ladder, and positioning the reflector at a different elevation.

In addition, great care must be used to avoid contamination of the optical surfaces and damage to the transmissometer components if this alternate approach is used. Because of the risk of damage to the COMS and personal safety considerations, it is recommended that the alternate zero alignment technique be performed only by experienced and qualified personnel.

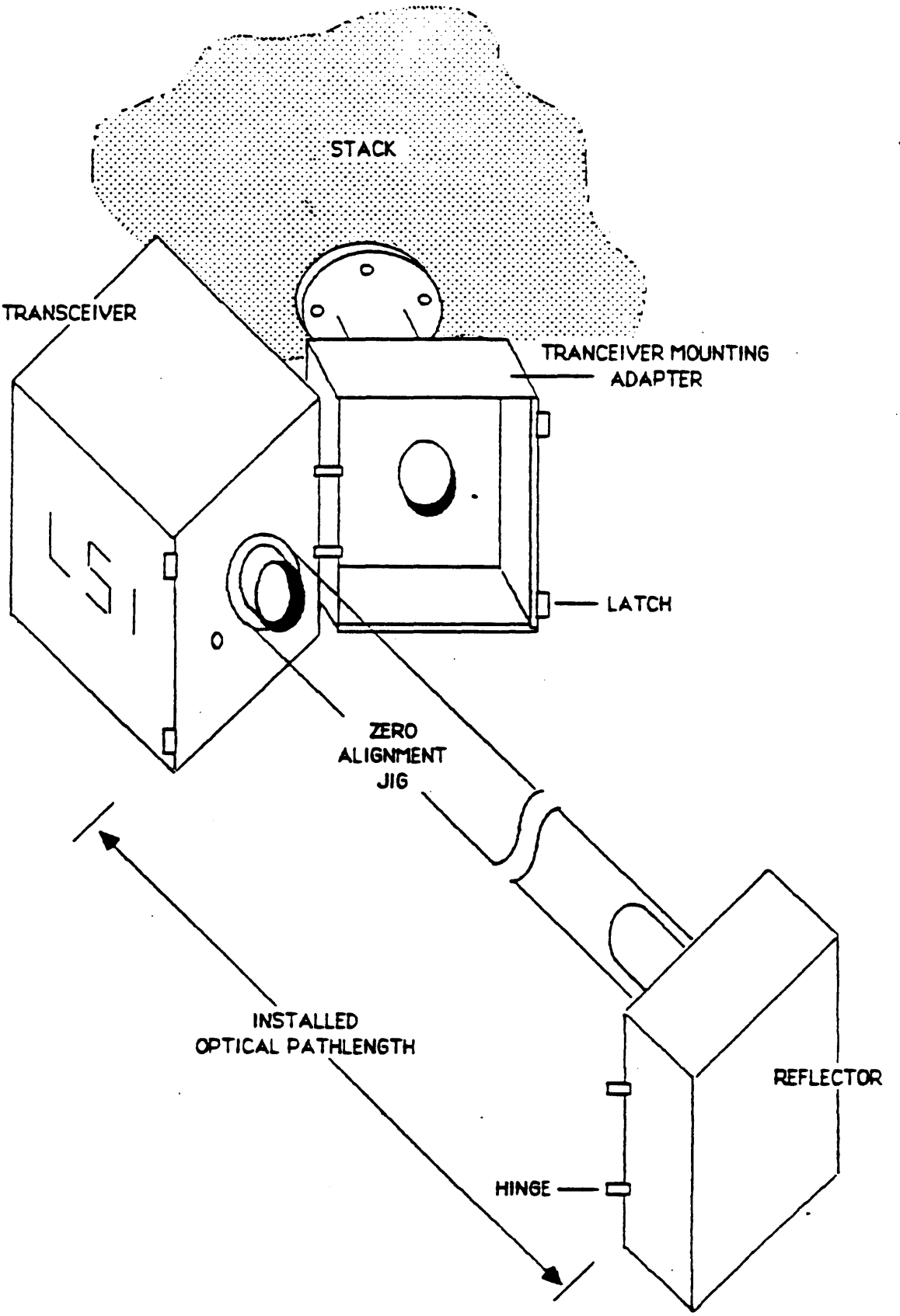


Figure 11-1. Alternate Zero Alignment Procedure Using Zero Alignment Jig

# APPENDIX A.

## Lear Siegler Measurement Controls Corporation
## Dynatron 1100M and MC2000 Data Forms

# LEAR SIEGLER 1100M / MC2000 OPACITY MONITOR

SOURCE IDENTIFICATION: _____ CORPORATION: _____

PROCESS UNIT/STACK IDENTIFICATION: _____ PLANT/SITE: _____

AUDITOR: _____ REPRESENTING: _____

ATTENDEES: _____ REPRESENTING: _____

_____ REPRESENTING: _____

_____ REPRESENTING: _____

_____ REPRESENTING: _____

DATE: _____

## PRELIMINARY DATA

1 Stack exit inside diameter (FT) = $L_x$ _____

2 [Stack (or duct) inside diameter (or width) at the transmissometer location (FT)] x 2 = $L_t$ _____

3 Calculated stack exit correlation ratio = $L_x / L_t$ _____

4 Source-cited stack exit correlation ratio _____

5 Source-cited zero automatic calibration value (% opacity) _____

6 Source-cited span automatic calibration value (% opacity) _____

[GO TO CONTROL UNIT / DATA RECORDER LOCATION.]

[INSPECT DATA RECORDING SYSTEM AND MARK WITH "OPACITY AUDIT," AUDITOR'S NAME, AFFILIATION, DATE, SOURCE, PROCESS UNIT/STACK IDENTIFICATION, AND THE TIME OF DAY.]

## FAULT LAMP CHECKS

| | ON | OFF |
|---|---|---|
| 7 WINDOW [Excessive dust on transceiver optics] | | |
| 8 FAULT DIAGNOSTICS [Additional fault has occured. If illuminated, determine the cause and magnitude of the fault before continuing the audit.] | | |

COMMENTS: _____

## ZERO CHECK

[UNLATCH THE TWO FRONT PANEL KNOBS AND PULL THE CONTROL UNIT FORWARD. MOVE THE ZERO/SPAN SWITCH TO THE "ZERO" POSITION.]

9 Panel meter zero calibration value (% Op) _____

10 Opacity data recorder zero calibration value (% Op) _____

# AUDIT DATA SHEET
# LEAR SIEGLER 1100M / MC2000 OPACITY MONITOR
# (Continued)

---

SPAN CHECK

[MOVE THE ZERO/SPAN SWITCH TO THE "SPAN" POSITION.]

11 Panel meter span calibration value (% Op) _____

12 Opacity data recorder span calibration value (% Op) _____

[RETURN THE ZERO/SPAN SWITCH TO THE CENTER POSITION AND SECURE THE CONTROL UNIT.]
[GO TO TRANSMISSOMETER LOCATION.]

RETROREFLECTOR DUST ACCUMULATION CHECK

13 Pre-cleaning effluent opacity (% Op) _____

[Remove, inspect, clean, and replace protective window.]

14 Post-cleaning effluent opacity (% Op) _____

[Go to transceiver location.]

TRANSCEIVER DUST ACCUMULATION CHECK

15 Pre-cleaning effluent opacity (% Op) _____

[Remove, inspect, clean, and replace protective window.]

16 Post-cleaning effluent opacity (% Op) _____

OPTICAL ALIGNMENT CHECK

[ACTIVATE THE ALIGNMENT MECHANISM BY TURNING ON THE APPROPRIATE TOGGLE SWITCH ON TOP OF THE LAMP POWER SUPPLY.]

[FOR TRANSCEIVERS EQUIPPED WITH A TARGET LIGHT, TURN ON THE "TARGET LIGHT" SWITCH.]

[FOR TRANSCEIVERS EQUIPPED WITH A TTL ALIGNMENT MECHANISM, TURN ON THE "LAMP STEADY" SWITCH.]

17 Image Centered?

| YES | NO |
|---|---|
| | |

[DRAW IMAGE.]

[TURN THE "TARGET LIGHT" OR "LAMP STEADY" SWITCH OFF.]

CALIBRATION ERROR CHECK

[REMOVE THE DIRTY WINDOW DETECTOR PHOTOCELL.]

[REMOVE THE TRANSCEIVER PROTECTIVE WINDOW.]

[INSTALL THE AUDIT JIG IN THE DIRTY WINDOW DETECTOR PORT AND ADJUST THE JIG ZERO UNTIL A VALUE BETWEEN 1% AND 2% OPACITY IS READ ON THE OPACITY DATA RECORDER.]

[INSTALL THE TRANSCEIVER PROTECTIVE WINDOW AND RECORD THE PROTECTIVE WINDOW OPACITY.]

18 Window opacity (including jig zero offset) _____

[REMOVE THE TRANSCEIVER PROTECTIVE WINDOW.]
[RECORD AUDIT FILTER DATA.]

| | FILTER | SERIAL NO. | % OPACITY |
|---|---|---|---|
| 19 | LOW | _____ | _____ |
| 20 | MED | _____ | _____ |
| 21 | HIGH | _____ | _____ |

# AUDIT DATA SHEET
# LEAR SIEGLER 1100M / MC2000 OPACITY MONITOR
# (Continued)

[REMOVE THE AUDIT FILTERS FROM THEIR PROTECTIVE COVERS. INSPECT, AND CLEAN EACH FILTER.]

[INSERT A FILTER, WAIT APPROXIMATELY 2 MINUTES, AND RECORD THE OPACITY VALUE REPORTED BY THE OPACITY DATA RECORDER. REPEAT THE PROCESS 5 TIMES FOR EACH FILTER.]

[IF THE JIG ZERO VALUES CHANGE BY MORE THAN 1.0% OPACITY DURING ANY OF THE RUNS, READJUST THE JIG ZERO TO THE ORIGINAL VALUE AND REPEAT THE RUN.]

| ZERO | LOW | MID | HIGH | ZERO |
|---|---|---|---|---|
| _____ | _____ | _____ | _____ | _____ |
| | _____ | _____ | _____ | _____ |
| | _____ | _____ | _____ | _____ |
| | _____ | _____ | _____ | _____ |
| | _____ | _____ | _____ | _____ |

[IF SIX-MINUTE INTEGRATED DATA ARE ALSO AVAILABLE, ALLOW 13 MINUTES EACH FOR AN ADDITIONAL RUN OF THE ZERO, LOW, MID, HIGH, AND ZERO READINGS.]

| ZERO | LOW | MID | HIGH | ZERO |
|---|---|---|---|---|
| _____ | _____ | _____ | _____ | _____ |

[REMOVE AUDIT JIG, REPLACE THE DIRTY WINDOW DETECTOR AND THE PROTECTIVE WINDOW, AND CLOSE THE TRANSCEIVER HOUSING.]

[RETURN TO CONTROL UNIT LOCATION.]

---

[OBTAIN A COPY OF THE AUDIT DATA FROM THE OPACITY DATA RECORDER AND ENSURE THAT THE DATA CAN BE CLEARLY READ AND INTERPRETED.]

[READ AND TRANSCRIBE FINAL CALIBRATION ERROR DATA.]

| ZERO | LOW | MID | HIGH | ZERO |
|---|---|---|---|---|
| 22 _____ | 23 _____ | 24 _____ | 25 _____ | 26 _____ |
| | 27 _____ | 28 _____ | 29 _____ | 30 _____ |
| | 31 _____ | 32 _____ | 33 _____ | 34 _____ |
| | 35 _____ | 36 _____ | 37 _____ | 38 _____ |
| | 39 _____ | 40 _____ | 41 _____ | 42 _____ |

[SIX-MINUTE AVERAGE DATA, IF APPLICABLE.]

| | | | | |
|---|---|---|---|---|
| 43 _____ | 44 _____ | 45 _____ | 46 _____ | 47 _____ |

CALCULATION OF AUDIT RESULTS

STACK EXIT CORRELATION ERROR (%):

48 $$\left[\frac{(\text{BLANK 4}) - (\text{BLANK 3})}{(\text{BLANK 3})}\right] \times 100 = _____$$

ZERO ERROR (% Op):

49 Panel meter $(\text{BLANK 9}) - (\text{BLANK 5}) =$ _____

50 Opacity data recorder $(\text{BLANK 10}) - (\text{BLANK 5}) =$ _____

SPAN ERROR (% Op):

51 Panel Meter $(\text{BLANK 11}) - (\text{BLANK 6}) =$ _____

52 Opacity Data Recorder $(\text{BLANK 12}) - (\text{BLANK 6}) =$ _____

OPTICAL SURFACE DUST ACCUMULATION (% Op):

53 Retroreflector $(\text{BLANK 13}) - (\text{BLANK 14}) =$ _____

54 Transceiver $(\text{BLANK 15}) - (\text{BLANK 16}) =$ _____

55 Total $(\text{BLANK 53}) + (\text{BLANK 54}) =$ _____

STACK EXIT CORRELATION RATIO AND ZERO OFFSET CORRECTION OF AUDIT FILTERS:

56 Low: $$\left[1 - \left[\left[1 - \frac{(\text{BLANK 19})}{100}\right]^{2 \times (\text{BLANK 4})} \times \left[1 - \frac{(\text{BLANK 42})}{100}\right]\right]\right] \times 100 = _____$$

7 Mid: $$\left[1 - \left[\left[1 - \frac{(\text{BLANK 20})}{100}\right]^{2 \times (\text{BLANK 4})} \times \left[1 - \frac{(\text{BLANK 42})}{100}\right]\right]\right] \times 100 = _____$$

8 High: $$\left[1 - \left[\left[1 - \frac{(\text{BLANK 21})}{100}\right]^{2 \times (\text{BLANK 4})} \times \left[1 - \frac{(\text{BLANK 42})}{100}\right]\right]\right] \times 100 = _____$$

# CALIBRATION ERROR CALCULATIONS

| LOW-RANGE DIFFERENCE | | | $\Delta_L$ | $\Delta_L^2$ |
|---|---|---|---|---|
| (BLANK 23) | (BLANK 56) | = | _____ | _____ |
| (BLANK 27) | (BLANK 56) | = | _____ | _____ |
| (BLANK 31) | (BLANK 56) | = | _____ | _____ |
| (BLANK 35) | (BLANK 56) | = | _____ | _____ |
| (BLANK 39) | (BLANK 56) | = | _____ | _____ |

$\Sigma\Delta_L$ = _____ $\Sigma\Delta_L^2$ = _____

| ITEM NO. | MID-RANGE DIFFERENCE | | | $\Delta_M$ | $\Delta_M^2$ |
|---|---|---|---|---|---|
| | (BLANK 24) | (BLANK 57) | = | _____ | _____ |
| | (BLANK 28) | (BLANK 57) | = | _____ | _____ |
| | (BLANK 32) | (BLANK 57) | = | _____ | _____ |
| | (BLANK 36) | (BLANK 57) | = | _____ | _____ |
| | (BLANK 40) | (BLANK 57) | = | _____ | _____ |

$\Sigma\Delta_M$ = _____ $\Sigma\Delta_M^2$ = _____

| ITEM NO. | HIGH RANGE DIFFERENCE | | | $\Delta_H$ | $\Delta_H^2$ |
|---|---|---|---|---|---|
| | (BLANK 25) | (BLANK 58) | = | _____ | _____ |
| | (BLANK 29) | (BLANK 58) | = | _____ | _____ |
| | (BLANK 33) | (BLANK 58) | = | _____ | _____ |
| | (BLANK 37) | (BLANK 58) | = | _____ | _____ |
| | (BLANK 41) | (BLANK 58) | = | _____ | _____ |

$\Sigma\Delta_H$ = _____ $\Sigma\Delta_H^2$ = _____

**MEAN ERROR = $\overline{ME}_L$**

$$\overline{ME}_L = \frac{\Sigma\Delta_L}{n} \frac{(\text{.....})}{(\text{.....})}$$

$\overline{ME}_L$ = _____

**MEAN ERROR = $\overline{ME}_M$**

$$\overline{ME}_M = \frac{\Sigma\Delta_M}{n} \frac{(\text{.....})}{(\text{.....})}$$

60 $\overline{ME}_M$ = _____

**MEAN ERROR = $\overline{ME}_H$**

$$\overline{ME}_H = \frac{\Sigma\Delta_H}{n} \frac{(\text{.....})}{(\text{.....})}$$

61 $\overline{ME}_H$ = _____

**CONFIDENCE INTERVAL = $CI_L$**

$$CI_L = ((n \times \Sigma\Delta_L^2) - (\Sigma\Delta_L)^2)^{0.5} \times 0.2776$$

$$CI_L = ((____ \times ____) - (____)^2)^{0.5} \times 0.2776$$

$CI_L$ = _____

**CONFIDENCE INTERVAL = $CI_M$**

$$CI_M = ((n \times \Sigma\Delta_M^2) - (\Sigma\Delta_M)^2)^{0.5} \times 0.2776$$

$$CI_M = ((____ \times ____) - (____)^2)^{0.5} \times 0.2776$$

63 $CI_M$ = _____

**CONFIDENCE INTERVAL = $CI_H$**

$$CI_H = ((n \times \Sigma\Delta_H^2) - (\Sigma\Delta_H)^2)^{0.5} \times 0.2776$$

$$CI_H = ((____ \times ____) - (____)^2)^{0.5} \times 0.2776$$

64 $CI_H$ = _____

**CALIBRATION ERROR = $CE_L$**

$CE_L = |\overline{ME}_L| + CI_L$

$CE_L$ = |_____| + (_____)

$CE_L$ = _____

**CALIBRATION ERROR = $CE_M$**

$CE_M = |\overline{ME}_M| + CI_M$

$CE_M$ = |_____| + (_____)

66 $CE_M$ = _____

**CALIBRATION ERROR = $CE_H$**

$CE_H = |\overline{ME}_H| + CI_H$

$CE_H$ = |_____| + (_____)

67 $CE_H$ = _____

**SIX-MINUTE AVERAGED ERROR**

$E(6)_L$ = _____ − _____ =
(BLANK 44) (BLANK 56)

$E(6)_L$ = _____

$E(6)_M$ = _____ − _____ =
(BLANK 45) (BLANK 57)

69 $E(6)_M$ = _____

$E(6)_H$ = _____ − _____ =
(BLANK 46) (BLANK 58)

70 $E(6)_H$ = _____

**LEAR SIEGLER 1100M / MC2000 OPACITY MONITOR**
**PERFORMANCE AUDIT DATA SUMMARY**

AUDITOR _____ DATE _____

SOURCE _____ UNIT _____

RESULTS CHECKED BY _____ DATE _____

| PARAMETER | | BLANK NO. | AUDIT RESULT | SPECIFICATION |
|---|---|---|---|---|
| FAULT LAMPS | | | | |
| WINDOW | | 7 | | OFF |
| FAULT DIAGNOSTIC | | 8 | | OFF |
| STACK EXIT CORRELATION ERROR | | 48 | | ± 2% |
| INTERNAL ZERO ERROR | PANEL METER | 49 | | ± 4%Op |
| | DATA RECORDER | 50 | | ± 4%Op |
| INTERNAL SPAN ERROR | PANEL METER | 51 | | ± 4%Op |
| | DATA RECORDER | 52 | | ± 4%Op |
| MONITOR ALIGNMENT ANALYSIS | | 17 | | CENTERED |
| OPTICAL SURFACE DUST ACCUMULATION | | | | |
| RETROREFLECTOR | | 53 | | ≤ 2% Op |
| TRANSCEIVER | | 54 | | ≤ 2% Op |
| TOTAL | | 55 | | ≤ 4% Op |
| CALIBRATION ERROR ANALYSIS | | | | |
| MEAN ERROR | | | | |
| LOW | | 59 | | |
| | | 68 [a] | | |
| MID | | 60 | | |
| | | 69 [a] | | |
| HIGH | | 61 | | |
| | | 70 [a] | | |
| CONFIDENCE INTERVAL | | | | |
| LOW | | 62 | | |
| MID | | 63 | | |
| HIGH | | 64 | | |
| CALIBRATION ERROR | | | | |
| LOW | | 65 | | ≤ 3% Op |
| MID | | 66 | | ≤ 3% Op |
| HIGH | | 67 | | ≤ 3% Op |

[a] ERROR BASED ON SIX-MINUTE AVERAGED DATA, FROM A SINGLE FILTER INSERTION.

4408 9/91

# APPENDIX B.

## Lear Siegler Measurement Controls Corporation
## Model RM-41 Audit Data Forms

SOURCE IDENTIFICATION _____ CORPORATION: _____

PROCESS UNIT/STACK IDENTIFICATION: _____ PLANT/SITE: _____

AUDITOR: _____ REPRESENTING: _____

ATTENDEES: _____ REPRESENTING: _____

_____ REPRESENTING: _____

_____ REPRESENTING: _____

_____ REPRESENTING: _____

DATE: _____

**PRELIMINARY DATA**

1 Stack exit inside diameter (FT) = $L_x$ _____

2 [Stack (or duct) inside diameter (or width) at the transmissometer location (FT)] x 2 = $L_t$ _____

3 Calculated OPLR = $L_x / L_t$ _____

4 Source-cited OPLR value _____

5 Source-cited zero automatic calibration values (% opacity) _____

6 Source-cited span automatic calibration value (% opacity) _____

[If unavailable, input the factory assigned span value.]

[GO TO DATA RECORDER LOCATION.]

[INSPECT DATA RECORDING SYSTEM AND MARK WITH "OPACITY AUDIT," AUDITOR'S NAME, AFFILIATION, DATE, SOURCE, PROCESS UNIT/STACK IDENTIFICATION, AND THE TIME OF DAY.]

[GO TO CONTROL UNIT LOCATION.]

**FAULT LAMP CHECKS**

| | ON | OFF |
|---|---|---|
| 7 FILTER [status of purge air blowers] | | |
| 8 SHUTTER [status of protective shutters] | | |
| 9 REF [AGC fault and/or excessive reference signal error] | | |
| 10 WINDOW [excessive zero compensation] | | |
| 11 OVER RANGE [exceeding optical density range setting] | | |

**CONTROL UNIT ADJUSTMENT AND CHECKS [TO BE DONE ONLY BY QUALIFIED PERSONNEL]**

[OPEN CONTROL UNIT AND PULL POWER FUSE.]

[PULL CAL TIMER BOARD.]

12 CAL timer board S1 switch position _____

[Turn CAL timer board S1 switch to sixth (6th) position, if necessary, and reinstall board.]

[Pull OPTICAL DENSITY board.]

13 OPTICAL DENSITY board S1 switch position _____

[Turn OPTICAL DENSITY board S1 switch to fifth (5th) position, if necessary, and reinstall board.]

[Pull OPACITY board.]

14 OPACITY board S1 switch position _____

[Turn OPACITY board to fifth (5th) position, if necessary.]

[Optional OPLR check: Measure the resistance in OHMs of the "$R_6$" potentiometer on the OPACITY board, and divide by 400 to get the internally set OPLR value.]

14a $R_6$ _____ (OHMs) / 400 = _____

[If $R_6$ value is not measured, enter the value from (BLANK 4) in (BLANK 14a).]

[Reinstall the OPACITY board.]

[Reinstall fuse and close control unit.]

15 Original position of "MEASUREMENT" switch _____

REFERENCE SIGNAL CHECK

[TURN "MEASUREMENT" SWITCH TO THE "REFERENCE" POSITION AND TAP THE PANEL METER FACE.]

[READ REFERENCE SIGNAL CURRENT VALUE ON 0-30 mA SCALE.]

16 Reference signal current value (mA) _____

[Turn "MEASUREMENT" switch to "100% Op" position.]

ZERO CHECK

[PRESS THE "OPERATE/CAL" SWITCH.]

[TAP THE PANEL METER AND READ THE ZERO CALIBRATION VALUE FROM THE 0-100% Op SCALE.]

17 Panel Meter zero calibration value (% Op) _____

18 Opacity data recorder zero calibration value (% Op) _____

ZERO COMPENSATION CHECK (INITIAL)

[TURN THE "MEASUREMENT" SWITCH TO THE "COMP" POSITION.]

[TAP THE PANEL METER AND READ THE ZERO COMPENSATION VALUE ON THE -0.02 TO +0.05 O.D. SCALE.]

19 Panel meter zero compensation value (O.D.) _____

SPAN CHECK

[PRESS THE "ZERO/SPAN" SWITCH AND TURN THE "MEASUREMENT" SWITCH TO THE "100% Op" POSITION.]

[TAP THE PANEL METER FACE AND READ THE SPAN CALIBRATION VALUE FROM THE 0-100% Op SCALE.]

20 Panel meter span calibration value (% Op) _____

21 Opacity data recorder span calibration value (% Op) _____

[PRESS THE "OPERATE/CAL" SWITCH.]

[GO TO TRANSMISSOMETER LOCATION.]

RETROREFLECTOR DUST ACCUMULATION CHECK

22 Pre-cleaning effluent opacity (% Op) _____

[Open the retroreflector, inspect and clean the retroreflector optical surface, and close the retroreflector.]

23 Post-cleaning effluent opacity (% Op) _____

[Go to transceiver location.]

# AUDIT DATA SHEET
# LEAR SEIGLER RM-41 TRANSMISSOMETER AND MODEL 611 CONTROL UNIT
# (Continued)

## TRANSCEIVER DUST ACCUMULATION CHECK

24 Pre-cleaning effluent opacity (% Op) _____

[Open the transceiver, inspect and clean the primary lens, inspect and clean the zero mirror, and close the transceiver.]

25 Post-cleaning effluent opacity (% Op) _____

[At control unit, press "OPERATE/CAL" switch, turn "MEASUREMENT" switch to "COMP" position, tap meter face, and read the zero compensation value from the -0.02 to +0.05 O.D. scale.]

26 Post-cleaning zero compensation value (O.D.) _____

[At control unit, press "OPERATE/CAL" switch and turn "MEASUREMENT" switch to the "100% Op" position.]

## AGC CHECK

27 AGC lamp status

| ON | OFF |
|---|---|
| | |

## OPTICAL ALIGNMENT CHECK

[REMOVE COVER FROM TRANSCEIVER MODE SWITCH AND TURN ONE POSITION COUNTER-CLOCKWISE TO "ALIGN" POSITION.]

[LOOK INTO VIEWING PORT ON RIGHT HAND SIDE OF TRANSCEIVER, AND OBSERVE POSITION OF BEAM IMAGE WITH RESPECT TO BLACK CIRCLE.]

28 Image Centered?

| YES | NO |
|---|---|
| | |

[DRAW LOCATION OF THE BEAM IMAGE.]

[TURN THE TRANSCEIVER MODE SWITCH CLOCKWISE UNTIL OPERATE APPEARS IN THE WINDOW. REPLACE THE MODE SWITCH PROTECTIVE COVER.]

## SPAN FILTER DATA CHECK

[READ SPAN FILTER OPTICAL DENSITY AND OUTPUT CURRENT FROM THE UNDERSIDE OF THE TRANSCEIVER.]

29 Span filter optical density (O.D.) _____

30 Span filter output current (mA) _____

## CALIBRATION ERROR CHECK

[OPEN THE TRANSCEIVER AND THE J-BOX.]

[INSTALL THE AUDIT JIG ON THE TRANSCEIVER PROJECTION LENS AND ADJUST THE JIG ZERO UNTIL THE J-BOX METER READS BETWEEN 19 AND 20 mA, AND A VALUE BETWEEN 0% AND 2% OPACITY IS READ ON THE OPACITY DATA RECORDER.]

[RECORD AUDIT FILTER DATA.]

| | FILTER | SERIAL NO. | % OPACITY |
|---|---|---|---|
| 31 | LOW | | |
| 32 | MED | | |
| 33 | HIGH | | |

## AUDIT DATA SHEET
## LEAR SEIGLER RM-41 TRANSMISSOMETER AND MODEL 611 CONTROL UNIT
## (Continued)

[REMOVE THE AUDIT FILTERS FROM THEIR PROTECTIVE COVERS. INSPECT, AND CLEAN EACH FILTER.]

[INSERT A FILTER IN THE JIG, WAIT APPROXIMATELY 2 MINUTES PER FILTER FOR A CLEAR RESPONSE, AND RECORD THE OPACITY VALUE REPORTED BY THE OPACITY DATA RECORDER. REPEAT THE PROCESS 5 TIMES FOR EACH FILTER.]

[IF JIG ZERO VALUES CHANGE BY MORE THAN 1.0% OPACITY DURING ANY OF THE RUNS, READJUST THE JIG ZERO TO THE ORIGINAL VALUE AND REPEAT THE RUN.]

| ZERO | LOW | MID | HIGH | ZERO |
|---|---|---|---|---|
| | | | | |
| | | | | |
| | | | | |
| | | | | |
| | | | | |

[IF SIX-MINUTE INTEGRATED DATA ARE AVAILABLE, ALLOW 13 MINUTES EACH FOR AN ADDITIONAL RUN OF THE ZERO, LOW, MID, HIGH, AND ZERO READINGS IN ORDER TO CHECK SIX-MINUTE AVERAGED CALIBRATION ERROR.]

| ZERO | LOW | MID | HIGH | ZERO |
|---|---|---|---|---|
| | | | | |

[REMOVE AUDIT JIG AND CLOSE TRANSCEIVER.]

[RETURN TO CONTROL UNIT LOCATION.]

---

ZERO COMPENSATION CHECK (FINAL)

[PRESS "OPERATE/CAL" SWITCH, TURN "MEASUREMENT" SWITCH TO "COMP" POSITION, AND READ THE ZERO COMPENSATION VALUE FROM THE -0.02 TO +0.05 O.D. SCALE.]

34 Final zero compensation value (O.D.) _____

[Press "OPERATE/CAL" switch.]

**CONTROL UNIT ADJUSTMENT RESET (TO BE DONE ONLY BY QUALIFIED PERSONNEL)**

[OPEN THE CONTROL UNIT AND PULL THE POWER FUSE.]

[IF NECESSARY, PULL THE FOLLOWING CIRCUIT BOARDS AND RESET THE S1 SWITCHES TO THE POSITIONS INDICATED IN THE CORRESPONDING BLANKS.]

| BOARD | BLANK NO. |
|---|---|
| Cal Timer | 12 |
| Optical Density | 13 |
| Opacity | 14 |

[REINSTALL THE POWER FUSE AND CLOSE THE CONTROL UNIT.]

[TURN THE "MEASUREMENT" SWITCH TO THE POSITION RECORDED IN (BLANK 15).]

[OBTAIN A COPY OF THE AUDIT DATA FROM THE OPACITY DATA RECORDER AND ENSURE THAT THE DATA CAN BE CLEARLY READ AND INTERPRETED.]

[READ AND TRANSCRIBE FINAL CALIBRATION ERROR DATA.]

| ZERO | LOW | MID | HIGH | ZERO |
|---|---|---|---|---|
| 35 _____ | 36 _____ | 37 _____ | 38 _____ | 39 _____ |
| | 40 _____ | 41 _____ | 42 _____ | 43 _____ |
| | 44 _____ | 45 _____ | 46 _____ | 47 _____ |
| | 48 _____ | 49 _____ | 50 _____ | 51 _____ |
| | 52 _____ | 53 _____ | 54 _____ | 55 _____ |

[SIX-MINUTE AVERAGE DATA, IF APPLICABLE.]

| | | | | |
|---|---|---|---|---|
| 56 _____ | 57 _____ | 58 _____ | 59 _____ | 60 _____ |

**CALCULATION OF AUDIT RESULTS**

**STACK EXIT CORRELATION ERROR (%):**

61 Source cited $\left[\dfrac{\text{(BLANK 4)} - \text{(BLANK 3)}}{\text{(BLANK 3)}}\right] \times 100 =$ _____

62 Measured $\left[\dfrac{\text{(BLANK 14a)} - \text{(BLANK 3)}}{\text{(BLANK 3)}}\right] \times 100 =$ (OPTIONAL) _____

**REFERENCE SIGNAL ERROR (%):**

63 $\left[\dfrac{\text{(BLANK 16)}}{20} - 1\right] \times 100 =$ _____

**ERO ERROR (% Op):**

4 Panel meter (BLANK 17) − (BLANK 5) = _____

5 Opacity data recorder (BLANK 18) − (BLANK 5) = _____

**PAN ERROR (% Op):**

Panel Meter (BLANK 20) − (BLANK 6) = _____

Opacity Data Recorder (BLANK 21) − (BLANK 6) = _____

# AUDIT DATA SHEET
# LEAR SIEGLER RM-41 TRANSMISSOMETER AND MODEL 611 CONTROL UNIT
# (Continued)

**ZERO COMPENSATION (O.D.):**

68 Initial _____ (BLANK 19) = _____

69 Post-cleaning _____ (BLANK 26) = _____

70 Final _____ (BLANK 34) = _____

**OPTICAL SURFACE DUST ACCUMULATION (% Op):**

71 Retroreflector _____ (BLANK 22) − _____ (BLANK 23) = _____

72 Transceiver _____ (BLANK 24) − _____ (BLANK 25) = _____

73 Total _____ (BLANK 71) + _____ (BLANK 72) = _____

**OPLR AND ZERO OFFSET CORRECTION OF AUDIT FILTERS (% OP):**

74 Low:

$$\left[1 - \left[\left[1 - \frac{\text{(BLANK 31)}}{100}\right]^{2 \times \text{(BLANK 14a)}} \times \left[1 - \frac{\text{(BLANK 55)}}{100}\right]\right]\right] \times 100 = _____$$

75 Mid:

$$\left[1 - \left[\left[1 - \frac{\text{(BLANK 32)}}{100}\right]^{2 \times \text{(BLANK 14a)}} \times \left[1 - \frac{\text{(BLANK 55)}}{100}\right]\right]\right] \times 100 = _____$$

76 High:

$$\left[1 - \left[\left[1 - \frac{\text{(BLANK 33)}}{100}\right]^{2 \times \text{(BLANK 14a)}} \times \left[1 - \frac{\text{(BLANK 55)}}{100}\right]\right]\right] \times 100 = _____$$

# CALIBRATION ERROR CALCULATION

| LOW-RANGE DIFFERENCE | | | $\Delta_L$ | $\Delta_L^2$ |
|---|---|---|---|---|
| _____ (BLANK 36) | − _____ (BLANK 74) | = | _____ | _____ |
| _____ (BLANK 40) | − _____ (BLANK 74) | = | _____ | _____ |
| _____ (BLANK 44) | − _____ (BLANK 74) | = | _____ | _____ |
| _____ (BLANK 48) | − _____ (BLANK 74) | = | _____ | _____ |
| _____ (BLANK 52) | − _____ (BLANK 74) | = | _____ | _____ |

$\Sigma\Delta_L$ = _____ $\Sigma\Delta_L^2$ = _____

| ITEM NO. | MID-RANGE DIFFERENCE | | | $\Delta_M$ | $\Delta_M^2$ |
|---|---|---|---|---|---|
| | _____ (BLANK 37) | − _____ (BLANK 75) | = | _____ | _____ |
| | _____ (BLANK 41) | − _____ (BLANK 75) | = | _____ | _____ |
| | _____ (BLANK 45) | − _____ (BLANK 75) | = | _____ | _____ |
| | _____ (BLANK 49) | − _____ (BLANK 75) | = | _____ | _____ |
| | _____ (BLANK 53) | − _____ (BLANK 75) | = | _____ | _____ |

$\Sigma\Delta_M$ = _____ $\Sigma\Delta_M^2$ = _____

| ITEM NO. | HIGH RANGE DIFFERENCE | | | $\Delta_H$ | $\Delta_H^2$ |
|---|---|---|---|---|---|
| | _____ (BLANK 38) | − _____ (BLANK 76) | = | _____ | _____ |
| | _____ (BLANK 42) | − _____ (BLANK 76) | = | _____ | _____ |
| | _____ (BLANK 46) | − _____ (BLANK 76) | = | _____ | _____ |
| | _____ (BLANK 50) | − _____ (BLANK 76) | = | _____ | _____ |
| | _____ (BLANK 54) | − _____ (BLANK 76) | = | _____ | _____ |

$\Sigma\Delta_H$ = _____ $\Sigma\Delta_H^2$ = _____

**LOW-RANGE MEAN ERROR = $\overline{ME}_L$**

$$\overline{ME}_L = \frac{\Sigma\Delta_L}{n} = \frac{(\text{.....})}{(\text{.....})}$$

$\overline{ME}_L$ = _____

**MID-RANGE MEAN ERROR = $\overline{ME}_M$**

$$\overline{ME}_M = \frac{\Sigma\Delta_M}{n} = \frac{(\text{.....})}{(\text{.....})}$$

78 $\overline{ME}_M$ = _____

**HIGH RANGE MEAN ERROR = $\overline{ME}_H$**

$$\overline{ME}_H = \frac{\Sigma\Delta_H}{n} = \frac{(\text{.....})}{(\text{.....})}$$

79 $\overline{ME}_H$ = _____

**LOW-RANGE CONFIDENCE INTERVAL = $CI_L$**

$$CI_L = ((n \times \Sigma\Delta_L^2) - (\Sigma\Delta_L)^2)^{0.5} \times 0.2776$$

$$CI_L = ((____ \times ____) - (____)^2)^{0.5} \times 0.2776$$

$CI_L$ = _____

**MID-RANGE CONFIDENCE INTERVAL = $CI_M$**

$$CI_M = ((n \times \Sigma\Delta_M^2) - (\Sigma\Delta_M)^2)^{0.5} \times 0.2776$$

$$CI_M = ((____ \times ____) - (____)^2)^{0.5} \times 0.2776$$

81 $CI_M$ = _____

**HIGH-RANGE CONFIDENCE INTERVAL = $CI_H$**

$$CI_H = ((n \times \Sigma\Delta_H^2) - (\Sigma\Delta_H)^2)^{0.5} \times 0.2776$$

$$CI_H = ((____ \times ____) - (____)^2)^{0.5} \times 0.2776$$

82 $CI_H$ = _____

**LOW-RANGE CALIBRATION ERROR = $CE_L$**

$$CE_L = |\overline{ME}_L| + CI_L$$

$$CE_L = |____| + (____)$$

$CE_L$ = _____

**MID-RANGE CALIBRATION ERROR = $CE_M$**

$$CE_M = |\overline{ME}_M| + CI_M$$

$$CE_M = |____| + (____)$$

84 $CE_M$ = _____

**HIGH-RANGE CALIBRATION ERROR = $CE_H$**

$$CE_H = |\overline{ME}_H| + CI_H$$

$$CE_H = |____| + (____)$$

85 $CE_H$ = _____

**SIX-MINUTE AVERAGED ERROR**

$E(6)_L$ = _____ (BLANK 57) − _____ (BLANK 74) =

$E(6)_L$ = _____

$E(6)_M$ = _____ (BLANK 58) − _____ (BLANK 75) =

87 $E(6)_M$ = _____

$E(6)_H$ = _____ (BLANK 59) − _____ (BLANK 76) =

88 $E(6)_H$ = _____

**LEAR SIEGLER MODEL RM-41 TRANSMISSOMETER AND MODEL 611 CONTROL UNIT PERFORMANCE AUDIT DATA SUMMARY**

AUDITOR _____ DATE _____

SOURCE _____ UNIT _____

RESULTS CHECKED BY _____ DATE _____

| PARAMETER | | BLANK NO. | AUDIT RESULT | SPECIFICATION |
|---|---|---|---|---|
| FAULT LAMPS | | | | |
| FILTER | | 7 | | OFF |
| SHUTTER | | 8 | | OFF |
| REFERENCE | | 9 | | OFF |
| WINDOW | | 10 | | OFF |
| OVER RANGE | | 11 | | OFF |
| AGC CIRCUIT STATUS | | 27 | | ON |
| STACK EXIT CORRELATION ERROR | CITED | 61 | | ± 2% |
| | MEASURED | 62 | | ± 2% |
| REFERENCE SIGNAL ANALYSIS | | 63 | | ± 10% |
| INTERNAL ZERO ERROR | PANEL METER | 64 | | ± 4%Op |
| | DATA RECORDER | 65 | | ± 4%Op |
| INTERNAL SPAN ERROR | PANEL METER | 66 | | ± 4% Op |
| | DATA RECORDER | 67 | | ± 4%Op |
| MONITOR ALIGNMENT ANALYSIS | | 28 | | CENTERED |
| INITIAL ZERO COMPENSATION | | 68 | | ± 0.018 OD |
| POST-CLEANING ZERO COMPENSATION | | 69 | | ± 0.018 OD |
| FINAL ZERO COMPENSATION | | 70 | | ± 0.018 OD |
| OPTICAL SURFACE DUST ACCUMULATION | | | | |
| RETROREFLECTOR | | 71 | | ≤ 2% Op |
| TRANSCEIVER | | 72 | | ≤ 2% Op |
| TOTAL | | 73 | | ≤ 4% Op |
| CALIBRATION ERROR ANALYSIS | | | | |
| MEAN ERROR | | | | |
| LOW | | 77 | | |
| | | 86[a] | | |
| MID | | 78 | | |
| | | 87[a] | | |
| HIGH | | 79 | | |
| | | 88[a] | | |
| CONFIDENCE INTERVAL | | | | |
| LOW | | 80 | | |
| MID | | 81 | | |
| HIGH | | 82 | | |
| CALIBRATION ERROR | | | | |
| LOW | | 83 | | ≤ 3% Op |
| MID | | 84 | | ≤ 3% Op |
| HIGH | | 85 | | ≤ 3% Op |

[a] ERROR BASED ON SIX-MINUTE AVERAGED DATA, FROM A SINGLE FILTER INSERTION.

# APPENDIX C.

## Lear Siegler Measurement Controls Corporation
## Model RM-4 Audit Data Forms

# AUDIT DATA SHEET
# LEAR SIEGLER RM-4 OPACITY MONITOR

SOURCE IDENTIFICATION: _____ CORPORATION: _____

PROCESS UNIT/STACK IDENTIFICATION: _____ PLANT/SITE: _____

AUDITOR: _____ REPRESENTING: _____

ATTENDEES: _____ REPRESENTING: _____

_____ REPRESENTING: _____

_____ REPRESENTING: _____

_____ REPRESENTING: _____

DATE: _____

## PRELIMINARY DATA

1 Stack exit inside diameter (FT) = $L_x$ _____

2 [Stack (or duct) inside diameter (or width) at each transmissometer location (FT)] x 2 = $L_t$ _____

3 Calculated OPLR = $L_x / L_t$ _____

4 Source-cited OPLR value _____

5 Source-cited zero automatic calibration value (% opacity) _____

6 Source-cited span automatic calibration value (% opacity) _____

[IF UNAVAILABLE, INPUT THE FACTORY ASSIGNED SPAN VALUE.]

[GO TO CONVERTER CONTROL UNIT/DATA RECORDER LOCATION.]

[INSPECT DATA RECORDING SYSTEM AND MARK WITH "OPACITY AUDIT," AUDITOR'S NAME, AFFILIATION, DATE, SOURCE, PROCESS UNIT/STACK IDENTIFICATION, AND THE TIME OF DAY.]

## FAULT LAMP CHECKS

| | ON | OFF |
|---|---|---|
| 7 FAULT [Low AGC current] | | |
| 8 OVER RANGE [Effluent opacity exceeds optical density range setting] | | |

## CONTROL UNIT CONFIGURATION CHECK

9 Original position of "Measurement Switch" _____

## ZERO CHECK

[TURN THE "MEASUREMENT" SWITCH TO THE "20% OPACITY" POSITION.]

[TURN THE "MODE" SWITCH TO THE "ZERO" POSITION.]

10 Panel meter zero calibration value (% Op) _____

11 Opacity data recorder zero calibration value (% Op) _____

## SPAN CHECK

[TURN THE "MEASUREMENT" SWITCH TO THE "100% OPACITY" POSITION.]

[TURN THE "MODE" SWITCH TO THE "CALIBRATE" POSITION.]

12 Panel Meter span calibration value (% Op) _____

13 Opacity data recorder span calibration value (% Op) _____

[OPTIONAL CHECK: Turn the "MEASUREMENT" switch to the "OPACITY INPUT" position and read the input current from the panel meter 0-20 mA scale.]

14 Panel meter input current value (mA) (Optional) _____

[TURN THE "MEASUREMENT" SWITCH BACK TO THE "100% OPACITY" POSITION.]

[TURN THE "MODE" SWITCH TO THE "OPERATE" POSITION AND GO TO THE TRANSMISSOMETER LOCATION.]

# AUDIT DATA SHEET
# LEAR SIEGLER RM-4 OPACITY MONITOR
# (Continued)

---

## RETROREFLECTOR DUST ACCUMULATION CHECK

15 Pre-cleaning effluent opacity (% Op) _____

[Open the retroreflector, inspect and clean the retroreflector optical surface, and close the retroreflector.]

16 Post-cleaning effluent opacity (% Op) _____

[GO TO TRANSCEIVER LOCATION.]

## TRANSCEIVER DUST ACCUMULATION CHECK

17 Pre-cleaning effluent opacity (% Op) _____

[Open the transceiver, inspect and clean the primary lens, clean the zero mirror, and close the transceiver.]

18 Post-cleaning effluent opacity (% Op) _____

[OPEN THE TRANSCEIVER CONTROL PANEL.]

## FAULT/TEST CHECK

[PRESS AND HOLD THE "FAULT/TEST" BUTTON AND READ THE TRANSCEIVER METER CURRENT VALUE ON THE 0-20 mA SCALE.]

19 Fault/test current value (mA) _____

## OPTICAL ALIGNMENT CHECK

[LOOK INTO THE VIEWING PORT ON THE RIGHT SIDE OF THE TRANSCEIVER AND OBSERVE THE POSITION OF THE BEAM IMAGE WITH RESPECT TO THE TARGET CIRCLE.]

20 Image Centered?

| YES | NO |
|---|---|
| | |

[DRAW LOCATION OF THE BEAM IMAGE.]

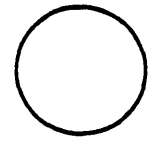

## SPAN FILTER DATA CHECK

[READ SPAN FILTER OPTICAL DENSITY FROM THE BOTTOM OF THE TRANSCEIVER CONTROL PANEL.]

21 Span filter optical density (O.D.) _____

## CALIBRATION ERROR CHECK

[INSTALL THE AUDIT JIG ON THE TRANSCEIVER PROJECTION LENS AND ADJUST THE JIG ZERO UNTIL THE OPACITY DATA RECORDER READS 0-2% OPACITY.]

[RECORD AUDIT FILTER DATA.]

| | FILTER | SERIAL NO. | % OPACITY |
|---|---|---|---|
| 22 | LOW | | |
| 23 | MED | | |
| 24 | HIGH | | |

4406 9/91

# AUDIT DATA SHEET

DATATEST MODEL 900 TRANSMISSOMETER
OPACITY PERFORMANCE AUDIT DATA SUMMARY


AUDITOR _____ DATE _____

SOURCE _____ UNIT _____

MODEL 900RM _____ or MODEL 900A_____

RESULTS CHECKED BY _____ DATE _____

| PARAMETER | | BLANK NO. | AUDIT RESULT | SPECIFICATION |
|---|---|---|---|---|
| FAULT LAMPS | | | | |
| LAMP OUT | | 7 | | OFF |
| BLOWER OUT | | 8 | | OFF |
| OVER EMISSION | | 9 | | OFF |
| MAINTENANCE | | 10 | | OFF |
| 4% DUST | | 11 | | OFF |
| STACK EXIT | CITED | 53 | | ± 2% |
| CORRELATION ERROR | MEASURED | 54 | | ± 2% |
| INTERNAL ZERO ERROR | PANEL METER | 55 | | ± 4%Op |
| | DATA RECORDER | 56 | | ± 4%Op |
| INTERNAL SPAN ERROR | PANEL METER | 57 | | ± 4%Op |
| | DATA RECORDER | 58 | | ± 4%Op |
| TRANSMISSOMETER OPTICAL ALIGNMENT | | 22 | | CENTERED |
| INITIAL LENS DUSTING | | 59 | | ≤ 4%Op |
| FINAL LENS DUSTING | | 60 | | ≤ 4%Op |
| OPTICAL SURFACE DUST ACCUMULATION | | | | |
| RETROREFLECTOR (RECEIVER) | | 61 | | ≤ 2% Op |
| TRANSCEIVER (TRANSMITTER) | | 62 | | ≤ 2% Op |
| TOTAL | | 63 | | ≤ 4%Op |
| CALIBRATION ERROR ANALYSIS | | | | |
| MEAN ERROR | | | | |
| LOW | | 67 [1-85] [b] | | |
| | | 76 [a] [1-94] | | |
| MID | | 68 [1-86] | | |
| | | 77 [a] [1-95] | | |
| HIGH | | 69 [1-87] | | |
| | | 78 [a] [1-96] | | |
| CONFIDENCE INTERVAL | | | | |
| LOW | | 70 [1-88] | | |
| MID | | 71 [1-89] | | |
| HIGH | | 72 [1-90] | | |
| CALIBRATION ERROR | | | | |
| LOW | | 73 [1-91] | | ≤ 3% Op |
| MID | | 74 [1-92] | | ≤ 3% Op |
| HIGH | | 75 [1-93] | | ≤ 3% Op |

[a] ERROR BASED ON SIX-MINUTE AVERAGED DATA, FROM A SINGLE FILTER INSERTION.

[b] VALUES IN BRACKETS ARE RESULTS OF MODEL 900A AUDIT.

4406 9/91

CALCULATION OF AUDIT RESULTS

STACK EXIT CORRELATION ERROR (%):

52 Source cited $\left[\frac{(\text{BLANK 4}) - (\text{BLANK 3})}{(\text{BLANK 3})}\right] \times 100 =$ _____

ZERO ERROR (% Op):

53 Panel meter (BLANK 10) − (BLANK 5) = _____

54 Opacity data recorder (BLANK 11) − (BLANK 5) = _____

SPAN ERROR (% Op):

55 Panel Meter (BLANK 12) − (BLANK 6) = _____

56 Opacity Data Recorder (BLANK 13) − (BLANK 6) = _____

57 Zero current (mA) (optional) (BLANK 25) − 2 = _____

OPTICAL SURFACE DUST ACCUMULATION (% OP):

58 Retroreflector (BLANK 15) − (BLANK 16) = _____

59 Transceiver (BLANK 17) − (BLANK 18) = _____

60 Total (BLANK 58) + (BLANK 59) = _____

61 Low: $\left[1 - \left[\left[1 - \frac{(\text{BLANK 22})}{100}\right]^{2 \times (\text{BLANK 4})} \times \left[1 - \frac{(\text{BLANK 46})}{100}\right]\right]\right] \times 100 =$ _____

62 Mid: $\left[1 - \left[\left[1 - \frac{(\text{BLANK 23})}{100}\right]^{2 \times (\text{BLANK 4})} \times \left[1 - \frac{(\text{BLANK 46})}{100}\right]\right]\right] \times 100 =$ _____

63 High: $\left[1 - \left[\left[1 - \frac{(\text{BLANK 24})}{100}\right]^{2 \times (\text{BLANK 4})} \times \left[1 - \frac{(\text{BLANK 46})}{100}\right]\right]\right] \times 100 =$ _____

4408 9/91

# AUDIT DATA SHEET

DATATEST MODEL 900 TRANSMISSOMETER
MODEL 900A CALIBRATION ERROR PROCEDURE

EFFLUENT OPACITY CORRECTION OF AUDIT FILTERS

REPRESENTATIVE EQUATION

$$\left[1 - \left[\left[1 - \frac{A + B}{200}\right] \times C\right]\right] \times 100 = D$$

| LOW | | | | MID | | | | HIGH | | | |
|---|---|---|---|---|---|---|---|---|---|---|---|
| A | B | C | D | A | B | C | D | A | B | C | D |
| I-26 | I-28 | I-64 | I-67 | I-28 | I-30 | I-65 | I-68 | I-30 | I-32 | I-66 | I-69 |
| I-32 | I-34 | I-64 | I-70 | I-34 | I-36 | I-65 | I-71 | I-36 | I-38 | I-66 | I-72 |
| I-38 | I-40 | I-64 | I-73 | I-40 | I-42 | I-65 | I-74 | I-42 | I-44 | I-66 | I-75 |
| I-44 | I-46 | I-64 | I-76 | I-46 | I-48 | I-65 | I-77 | I-48 | I-50 | I-66 | I-78 |
| I-50 | I-52 | I-64 | I-79 | I-52 | I-54 | I-65 | I-80 | I-54 | I-56 | I-66 | I-81 |
| I-57 | I-59 | I-64 | I-82 | I-59 | I-61 | I-65 | I-83 | I-61 | I-63 | I-66 | I-84 |

# LEAR SIEGLER MODEL RM-4 OPACITY MONITOR
# PERFORMANCE AUDIT DATA SUMMARY

AUDITOR _____ DATE _____

SOURCE _____ UNIT _____

RESULTS CHECKED BY _____ DATE _____

| PARAMETER | | BLANK NO. | AUDIT RESULT | SPECIFICATION |
|---|---|---|---|---|
| FAULT LAMPS | | | | |
| FAULT | | 7 | | OFF |
| OVER RANGE | | 8 | | OFF |
| STACK EXIT CORRELATION ERROR | | 52 | | ± 2% |
| INTERNAL ZERO ERROR | PANEL METER | 53 | | ± 4%Op |
| | DATA RECORDER | 54 | | ± 4%Op |
| INTERNAL SPAN ERROR | PANEL METER | 55 | | ± 4%Op |
| | DATA RECORDER | 56 | | ± 4%Op |
| ZERO CURRENT ERROR (OPTIONAL) | | 57 | | ± 1 mA |
| MONITOR ALIGNMENT | | 20 | | CENTERED |
| OPTICAL SURFACE DUST ACCUMULATION | | | | |
| RETROREFLECTOR | | 58 | | ≤ 2% Op |
| TRANSCEIVER | | 59 | | ≤ 2% Op |
| TOTAL | | 60 | | ≤ 4% Op |
| CALIBRATION ERROR ANALYSIS | | | | |
| MEAN ERROR | | | | |
| LOW | | 64 | | |
| | | 73 [a] | | |
| MID | | 65 | | |
| | | 74 [a] | | |
| HIGH | | 66 | | |
| | | 75 [a] | | |
| CONFIDENCE INTERVAL | | | | |
| LOW | | 67 | | |
| MID | | 68 | | |
| HIGH | | 69 | | |
| CALIBRATION ERROR | | | | |
| LOW | | 70 | | ≤ 3% Op |
| MID | | 71 | | ≤ 3% Op |
| HIGH | | 72 | | ≤ 3% Op |

[a] ERROR BASED ON SIX-MINUTE AVERAGED DATA, FROM A SINGLE FILTER INSERTION.

4408 9/91

---

**CALIBRATION ERROR CHECK - MODEL 900A (INCREMENTAL PROCEDURE)**

[AUDITING THE MODEL 900A TRANSMISSOMETER REQUIRES THE USE OF AN INCREMENTAL CALIBRATION ERROR PROCEDURE. IF THE EFFLUENT OPACITY IS FLUCTUATING BY 4% OR MORE, THE INCREMENTAL PROCEDURE CANNOT BE USED AND THE CALIBRATION ERROR CHECK CANNOT BE PERFORMED.]

[RECORD AUDIT FILTER DATA.]

| | FILTER | SERIAL NO. | % OPACITY |
|---|---|---|---|
| I-23 | LOW | _____ | _____ |
| I-24 | MED | _____ | _____ |
| I-25 | HIGH | _____ | _____ |

[INSTALL THE AUDIT JIG ON THE TRANSMISSOMETER.]

[REMOVE THE AUDIT FILTERS FROM THE PROTECTIVE COVERS. INSPECT AND CLEAN EACH FILTER.]

[INSERT THE BLANK FILTER AND RECORD THE EFFLUENT OPACITY VALUE REPORTED BY THE OPACITY DATA RECORDER.]

[REMOVE THE BLANK FILTER, INSERT A NEW FILTER, WAIT APPROXIMATELY TWO MINUTES, AND RECORD THE OPACITY VALUE REPORTED FROM THE OPACITY DATA RECORDER.]

[REMOVE THE FILTER, REPLACE THE BLANK FILTER, AND RECORD THE EFFLUENT OPACITY.]

[REPEAT THIS PROCESS FIVE TIMES.]

| EFFLUENT | LOW | EFFLUENT | MID | EFFLUENT | HIGH |
|---|---|---|---|---|---|
| _____ | _____ | _____ | _____ | _____ | _____ |
| _____ | _____ | _____ | _____ | _____ | _____ |
| _____ | _____ | _____ | _____ | _____ | _____ |
| _____ | _____ | _____ | _____ | _____ | _____ |
| _____ | _____ | _____ | _____ | _____ | _____ |
| _____ | | | | | |

[IF SIX-MINUTE INTEGRATED DATA ARE AVAILABLE. ALLOW 13 MINUTES EACH FOR AN ADDITIONAL RUN OF THE EFFLUENT, LOW, MID, AND HIGH READINGS.]

| EFFLUENT | LOW | EFFLUENT | MID | EFFLUENT | HIGH |
|---|---|---|---|---|---|
| _____ | _____ | _____ | _____ | _____ | _____ |
| _____ | | | | | |

[REMOVE AUDIT JIG AND CLOSE TRANSCEIVER.]

[RETURN TO CONTROL UNIT LOCATION.]

[OBTAIN A COPY OF THE AUDIT DATA FROM THE OPACITY DATA RECORDER, AND ENSURE THAT THE DATA CAN BE CLEARLY READ AND INTERPRETED.]

[PERFORM THE FINAL ZERO COMPENSATION CHECK IN ITEM 26.]

---

**LENS DUSTING CHECK (FINAL)**

[MEASURE THE VOLTAGE ON TEST POINT 3 OF PC-5 IN MILLIVOLTS. DIVIDE THIS VALUE BY 100 TO CALCULATE THE LENS DUSTING IN PERCENT OPACITY.]

26 Final lens dusting value (% Op) = _____(MV) / 100 = _____

# AUDIT DATA SHEET
# DYNATRON MODEL 1100 OPACITY MONITOR

SOURCE IDENTIFICATION: _____ CORPORATION: _____

PROCESS UNIT/STACK IDENTIFICATION: _____ PLANT/SITE: _____

AUDITOR: _____ REPRESENTING: _____

ATTENDEES: _____ REPRESENTING: _____

_____ REPRESENTING: _____

_____ REPRESENTING: _____

_____ REPRESENTING: _____

DATE: _____

## PRELIMINARY DATA

1 Stack exit inside diameter (FT) = $L_x$ _____

2 [Stack (or duct) inside diameter (or width) at the transmissometer location (FT)] x 2 = $L_t$ _____

3 Calculated "M" Factor = $L_x / L_t$ _____

4 Source-cited "M" Factor value _____

5 Source-cited zero automatic calibration values (% opacity) _____

6 Source-cited span automatic calibration value (% opacity) _____

[GO TO CONTROL UNIT / DATA RECORDER LOCATION.]

[INSPECT THE DATA RECORDING SYSTEM AND MARK WITH "OPACITY AUDIT," AUDITOR'S NAME, AFFILIATION, DATE, SOURCE, PROCESS UNIT/STACK IDENTIFICATION, AND THE TIME OF DAY.]

## FAULT LAMP CHECKS

| | ON | OFF |
|---|---|---|
| 7 LAMP [Insufficient measurement lamp output] | | |
| 8 WINDOW [Excessive dust on transceiver optics] | | |
| 9 AIR FLOW [Insufficient purge air flow] | | |

## CONTROL UNIT CHECKS

10 Automatic calibration time (cycle time) knob position _____

[Turn CYCLE TIME knob to "MANUAL" position.]

11 Meter display knob position _____

[Turn METER DISPLAY knob to "OPACITY position, if necessary.]

## ZERO CHECK

[PRESS ZERO/SPAN SWITCH.]

12 Panel meter zero calibration value (% Op) _____

13 Opacity data recorder zero calibration value (% Op) _____

4408 9/91

# AUDIT DATA SHEET
DATATEST MODEL 900 TRANSMISSOMETER


**LENS DUSTING (% Op):**

59 Initial _____ (BLANK 15) = _____

60 Final _____ (BLANK 26) = _____

**OPTICAL SURFACE DUST ACCUMULATION (% Op):**

61 Retroreflector _____ (BLANK 18) − _____ (BLANK 19) = _____

62 Transceiver _____ (BLANK 20) − _____ (BLANK 21) = _____

63 Total _____ (BLANK 61) + _____ (BLANK 62) = _____

**CALCULATION OF MODEL 900RM CALIBRATION ERROR RESULTS (JIG PROCEDURE)**

**EXIT CORRELATION AND ZERO OFFSET CORRECTION OF AUDIT FILTERS (% OP):**

64 Low: $\left[1 - \left[\left[1 - \frac{\text{(BLANK 23)}}{100}\right]^{\text{(BLANK 12)}} \times \left[1 - \frac{\text{(BLANK 47)}}{100}\right]\right]\right] \times 100 =$ _____

65 Mid: $\left[1 - \left[\left[1 - \frac{\text{(BLANK 24)}}{100}\right]^{\text{(BLANK 12)}} \times \left[1 - \frac{\text{(BLANK 47)}}{100}\right]\right]\right] \times 100 =$ _____

66 High: $\left[1 - \left[\left[1 - \frac{\text{(BLANK 25)}}{100}\right]^{\text{(BLANK 12)}} \times \left[1 - \frac{\text{(BLANK 47)}}{100}\right]\right]\right] \times 100 =$ _____

# AUDIT DATA SHEET
# DYNATRON MODEL 1100 OPACITY MONITOR
# (Continued)

[REMOVE THE AUDIT FILTERS FROM THE PROTECTIVE COVERS. INSPECT, AND CLEAN EACH FILTER.]

[INSERT A FILTER, WAIT APPROXIMATELY 2 MINUTES, AND RECORD THE OPACITY VALUE REPORTED BY THE OPACITY DATA RECORDER. REPEAT THE PROCESS 5 TIMES FOR EACH FILTER.]

[IF THE JIG ZERO VALUES CHANGE BY MORE THAN 1.0% OPACITY DURING ANY OF THE RUNS, READJUST THE JIG ZERO TO THE ORIGINAL VALUE AND REPEAT THE RUN.]

| ZERO | LOW | MID | HIGH | ZERO |
|---|---|---|---|---|
| _____ | _____ | _____ | _____ | _____ |
| | _____ | _____ | _____ | _____ |
| | _____ | _____ | _____ | _____ |
| | _____ | _____ | _____ | _____ |
| | _____ | _____ | _____ | _____ |

[IF SIX-MINUTE INTEGRATED DATA ARE ALSO AVAILABLE, ALLOW 13 MINUTES EACH FOR AN ADDITIONAL RUN OF THE ZERO, LOW, MID, HIGH, AND ZERO READINGS.]

| ZERO | LOW | MID | HIGH | ZERO |
|---|---|---|---|---|
| _____ | _____ | _____ | _____ | _____ |

[REMOVE AUDIT JIG, REPLACE THE DIRTY WINDOW DETECTOR AND THE PROTECTIVE WINDOW, AND CLOSE THE TRANSCEIVER HOUSING.]

[RETURN TO CONTROL UNIT LOCATION.]

## CONTROL UNIT ADJUSTMENT RESET

[IF NECESSARY, RESET THE CONTROL UNIT CALIBRATION TIMER AND METER DISPLAY KNOBS TO THE POSITIONS INDICATED IN THE CORRESPONDING BLANKS.]

| KNOB | BLANK NO. |
|---|---|
| Automatic Calibration Timer | 10 |
| Meter Display | 11 |

[OBTAIN A COPY OF THE AUDIT DATA FROM THE OPACITY DATA RECORDER, AND ENSURE THAT THE DATA CAN BE CLEARLY READ AND INTERPRETED.]

[READ AND TRANSCRIBE FINAL CALIBRATION ERROR DATA.]

| ZERO | LOW | MID | HIGH | ZERO |
|---|---|---|---|---|
| 25 _____ | 26 _____ | 27 _____ | 28 _____ | 29 _____ |
| | 30 _____ | 31 _____ | 32 _____ | 33 _____ |
| | 34 _____ | 35 _____ | 36 _____ | 37 _____ |
| | 38 _____ | 39 _____ | 40 _____ | 41 _____ |
| | 42 _____ | 43 _____ | 44 _____ | 45 _____ |

[SIX-MINUTE AVERAGE DATA, IF APPLICABLE.]

| | | | | |
|---|---|---|---|---|
| 46 _____ | 47 _____ | 48 _____ | 49 _____ | 50 _____ |

4408 9/91

---

**CALIBRATION ERROR CHECK - MODEL 900 RM (JIG PROCEDURE)**

[OPEN THE TRANSCEIVER AND INSTALL THE AUDIT JIG. INSTALL THE CLEAR HOLE FILTER AND ADJUST THE JIG ZERO UNTIL A VALUE BETWEEN 0% AND 2% OPACITY IS READ ON THE OPACITY DATA RECORDER.]

[RECORD AUDIT FILTER DATA.]

| FILTER | SERIAL NO. | % OPACITY |
|---|---|---|
| 23 LOW | _____ | _____ |
| 24 MED | _____ | _____ |
| 25 HIGH | _____ | _____ |

[REMOVE THE AUDIT FILTERS FROM THEIR PROTECTIVE COVERS. INSPECT AND CLEAN EACH FILTER.]

[INSERT EACH FILTER IN THE JIG, WAIT APPROXIMATELY 2 MINUTES PER FILTER FOR A CLEAR RESPONSE, AND RECORD THE OPACITY VALUE REPORTED BY THE OPACITY DATA RECORDER. REPEAT THE PROCESS 5 TIMES FOR EACH FILTER.]

[IF JIG ZERO VALUES CHANGE BY MORE THAN 1.0% OPACITY DURING ANY OF THE RUNS, READJUST THE JIG ZERO TO THE ORIGINAL VALUE AND REPEAT THE RUN.]

| ZERO | LOW | MID | HIGH | ZERO |
|---|---|---|---|---|
| _____ | _____ | _____ | _____ | _____ |
| | _____ | _____ | _____ | _____ |
| | _____ | _____ | _____ | _____ |
| | _____ | _____ | _____ | _____ |
| | _____ | _____ | _____ | _____ |

[IF SIX-MINUTE INTEGRATED DATA ARE AVAILABLE, ALLOW 13 MINUTES EACH FOR AN ADDITIONAL RUN OF THE ZERO, LOW, MID, HIGH, AND ZERO READINGS.]

| ZERO | LOW | MID | HIGH | ZERO |
|---|---|---|---|---|
| _____ | _____ | _____ | _____ | _____ |

[REMOVE AUDIT JIG AND CLOSE TRANSCEIVER.]

[RETURN TO CONTROL UNIT LOCATION.]

---

**LENS DUSTING CHECK (FINAL)**

[MEASURE THE VOLTAGE ON TEST POINT 3 OF PC-5 IN MILLIVOLTS. DIVIDE THIS VALUE BY 100 TO CALCULATE THE LENS DUSTING IN PERCENT OPACITY.]

26 Final lens dusting value (% Op) = _____(MV) / 100 = _____

[OBTAIN A COPY OF THE AUDIT DATA FROM THE OPACITY DATA RECORDER AND ENSURE THAT THE DATA CAN BE CLEARLY READ AND INTERPRETED.]

# CALIBRATION ERROR CALCULATIONS

| LOW-RANGE DIFFERENCE | | $\Delta_L$ | $\Delta_L^2$ |
|---|---|---|---|
| _____ (BLANK 26) | _____ (BLANK 59) | _____ | _____ |
| _____ (BLANK 30) | _____ (BLANK 59) | _____ | _____ |
| _____ (BLANK 34) | _____ (BLANK 59) | _____ | _____ |
| _____ (BLANK 38) | _____ (BLANK 59) | _____ | _____ |
| _____ (BLANK 42) | _____ (BLANK 59) | _____ | _____ |

$\Sigma\Delta_L$ = _____ $\Sigma\Delta_L^2$ = _____

ITEM NO.

| MID-RANGE DIFFERENCE | | $\Delta_M$ | $\Delta_M^2$ |
|---|---|---|---|
| _____ (BLANK 27) | _____ (BLANK 60) | _____ | _____ |
| _____ (BLANK 31) | _____ (BLANK 60) | _____ | _____ |
| _____ (BLANK 35) | _____ (BLANK 60) | _____ | _____ |
| _____ (BLANK 39) | _____ (BLANK 60) | _____ | _____ |
| _____ (BLANK 43) | _____ (BLANK 60) | _____ | _____ |

$\Sigma\Delta_M$ = _____ $\Sigma\Delta_M^2$ = _____

ITEM NO.

| HIGH RANGE DIFFERENCE | | $\Delta_H$ | $\Delta_H^2$ |
|---|---|---|---|
| _____ (BLANK 28) | _____ (BLANK 51) | _____ | _____ |
| _____ (BLANK 32) | _____ (BLANK 61) | _____ | _____ |
| _____ (BLANK 36) | _____ (BLANK 61) | _____ | _____ |
| _____ (BLANK 40) | _____ (BLANK 61) | _____ | _____ |
| _____ (BLANK 44) | _____ (BLANK 61) | _____ | _____ |

$\Sigma\Delta_H$ = _____ $\Sigma\Delta_H^2$ = _____

**MEAN ERROR = $\overline{ME}_L$**

$$\overline{ME}_L = \frac{\Sigma\Delta_L}{n} \quad \frac{(\text{.....})}{(\text{.....})}$$

$\overline{ME}_L$ = _____

**MEAN ERROR = $\overline{ME}_M$**

$$\overline{ME}_M = \frac{\Sigma\Delta_M}{n} \quad \frac{(\text{.....})}{(\text{.....})}$$

63 $\overline{ME}_M$ = _____

**MEAN ERROR = $\overline{ME}_H$**

$$\overline{ME}_H = \frac{\Sigma\Delta_H}{n} \quad \frac{(\text{.....})}{(\text{.....})}$$

64 $\overline{ME}_H$ = _____

**CONFIDENCE INTERVAL = $CI_L$**

$$CI_L = ((n \times \Sigma\Delta_L^2) - (\Sigma\Delta_L)^2)^{0.5} \times 0.2776$$

$$CI_L = ((____ \times ____) - (____)^2)^{0.5} \times 0.2776$$

$CI_L$ = _____

**CONFIDENCE INTERVAL = $CI_M$**

$$CI_M = ((n \times \Sigma\Delta_M^2) - (\Sigma\Delta_M)^2)^{0.5} \times 0.2776$$

$$CI_M = ((____ \times ____) - (____)^2)^{0.5} \times 0.2776$$

66 $CI_M$ = _____

**CONFIDENCE INTERVAL = $CI_H$**

$$CI_H = ((n \times \Sigma\Delta_H^2) - (\Sigma\Delta_H)^2)^{0.5} \times 0.2776$$

$$CI_H = ((____ \times ____) - (____)^2)^{0.5} \times 0.2776$$

67 $CI_H$ = _____

**CALIBRATION ERROR = $CE_L$**

$$CE_L = |\overline{ME}_L| + CI_L$$

$$CE_L = |____| + (____)$$

$CE_L$ = _____

**CALIBRATION ERROR = $CE_M$**

$$CE_M = |\overline{ME}_M| + CI_M$$

$$CE_M = |____| + (____)$$

69 $CE_M$ = _____

**CALIBRATION ERROR = $CE_H$**

$$CE_H = |\overline{ME}_H| + CI_H$$

$$CE_H = |____| + (____)$$

70 $CE_H$ = _____

**SIX-MINUTE AVERAGED ERROR**

$E(6)_L$ = _____ (BLANK 47) _____ (BLANK 59) =

$E(6)_L$ = _____

$E(6)_M$ = _____ (BLANK 48) _____ (BLANK 60) =

72 $E(6)_M$ = _____

$E(6)_H$ = _____ (BLANK 49) _____ (BLANK 61) =

73 $E(6)_H$ = _____

SOURCE IDENTIFICATION: _____ CORPORATION: _____

PROCESS UNIT/STACK IDENTIFICATION: _____ PLANT/SITE: _____

AUDITOR: _____ REPRESENTING: _____

ATTENDEES: _____ REPRESENTING: _____

_____ REPRESENTING: _____

_____ REPRESENTING: _____

_____ REPRESENTING: _____

DATE: _____

**PRELIMINARY DATA**

1 Stack exit inside diameter (ft) = $L_x$ _____

2 [Stack (or duct) inside diameter (or width) at the transmissometer location (ft) = $L_1$ _____

3 Calculated correction factor = $L_x / L_1$ _____

4 Source-cited correction factor value _____

5 Source-cited zero automatic calibration values (% opacity) _____

6 Source-cited span automatic calibration value (% opacity) _____

[GO TO DATA RECORDER LOCATION.]

[INSPECT DATA RECORDING SYSTEM AND MARK WITH "OPACITY AUDIT," AUDITOR'S NAME, AFFILIATION, DATE, SOURCE, PROCESS UNIT/STACK IDENTIFICATION, AND THE TIME OF DAY.]

[GO TO CONTROL UNIT LOCATION.]

**FAULT LAMP INSPECTION**

| | ON | OFF |
|---|---|---|
| 7 Lamp out [Drastic reduction in measurement beam] | | |
| 8 Blower out [Status of purge air blower] | | |
| 9 Over emission[Exceeding high present alarm value] | | |
| 10 Maintenance [Exceeding intermediate present alarm value] | | |
| 11 4% Dust [Dust accumulation exceeds 4% opacity] | | |

**CONTROL UNIT CHECKS [TO BE DONE ONLY BY QUALIFIED PERSONNEL]**

12 Correction factor measurement (optional)

[OPEN CONTROL UNIT AND CONNECT A VOLTMETER ACROSS TP-1 (GROUND) AND TP-2 OF THE PC-2 CIRCUIT BOARD. MEASURE THE MILLIVOLT OUTPUT AND DIVIDE IT BY 1000 TO YIELD THE $L_x / L_1$ VALUE USED BY THE MONITOR.]

[IF THE CORRECTION FACTOR IS NOT MEASURED DIRECTLY, ENTER THE VALUE IN BLANK 4 INTO BLANK 12.]

_____ (MV) / 1000 = _____

**ZERO CHECK**

[TURN ON THE "ZERO CALIBRATION" SWITCH INSIDE THE CONTROL UNIT.]

[READ THE ZERO CALIBRATION VALUE FROM THE PANEL METER AND THE DATA RECORDER.]

13 Panel meter zero calibration value (% Op) _____

14 Opacity data recorder zero calibration value (% Op) _____

# AUDIT DATA SHEET
# DYNATRON MODEL 1100 OPACITY MONITOR
# (Continued)
# INCREMENTAL CAL ERROR

CALIBRATION ERROR CHECK [INCREMENTAL PROCEDURE]

[THE INCREMENTAL CALIBRATION ERROR PROCEDURE SHOULD BE USED ONLY WHEN THE JIG PROCEDURE CANNOT BE USED.]

[IF THE EFFLUENT OPACITY IS FLUCTUATING BY 2% OPACITY OR MORE, THE INCREMENTAL PROCEDURE CANNOT BE USED.]

[THE RATED OPACITY VALUES OF THE AUDIT FILTERS MUST INCLUDE AN ASSUMED NOMINAL OPACITY VALUE FOR THE TRANSCEIVER PROTECTIVE WINDOW.]

[RECORD AUDIT FILTER DATA.]

| | FILTER | SERIAL NO. | % OPACITY |
|---|---|---|---|
| 1-21 | LOW | _____ | _____ |
| 1-22 | MID | _____ | _____ |
| 1-23 | HIGH | _____ | _____ |

[REMOVE AUDIT FILTERS FROM PROTECTIVE COVERS, INSPECT, AND CLEAN EACH FILTER.]
[RECORD THE EFFLUENT OPACITY VALUE FROM THE OPACITY DATA RECORDER.]
[REMOVE THE TRANSCEIVER PROTECTIVE WINDOW, INSERT A FILTER, WAIT APPROXIMATELY TWO MINUTES, AND RECORD THE OPACITY VALUE REPORTED FROM THE OPACITY DATA RECORDER.]
[REMOVE THE FILTER, REPLACE THE TRANSCEIVER PROTECTIVE WINDOW AND RECORD THE EFFLUENT OPACITY.]

[REPEAT THIS PROCESS FIVE TIMES FOR EACH FILTER.]

| EFFLUENT | LOW | EFFLUENT | MID | EFFLUENT | HIGH |
|---|---|---|---|---|---|
| _____ | _____ | _____ | _____ | _____ | _____ |
| _____ | _____ | _____ | _____ | _____ | _____ |
| _____ | _____ | _____ | _____ | _____ | _____ |
| _____ | _____ | _____ | _____ | _____ | _____ |
| _____ | _____ | _____ | _____ | _____ | _____ |
| _____ | | | | | |

[IF SIX-MINUTE INTEGRATED DATA ARE ALSO AVAILABLE, ALLOW 13 MINUTES EACH FOR AN ADDITIONAL RUN OF THE EFFLUENT LOW, MID, AND HIGH READINGS.]

| EFFLUENT | LOW | EFFLUENT | MID | EFFLUENT | HIGH |
|---|---|---|---|---|---|
| _____ | _____ | _____ | _____ | _____ | _____ |
| _____ | | | | | |

[CLOSE THE TRANSCEIVER HOUSING.]

[RETURN TO CONTROL UNIT LOCATION.]

4408 9/91

## LAND COMBUSTION MODEL 4500
## OPACITY MONITOR PERFORMANCE AUDIT DATA SUMMARY

AUDITOR _____ DATE _____

SOURCE _____ UNIT _____

RESULTS CHECKED BY _____ DATE _____

| PARAMETER | | BLANK NO. | AUDIT RESULT | SPECIFICATION |
|---|---|---|---|---|
| FAULT LAMP | | | | |
| FAULT | | 7 | | OFF |
| STACK EXIT CORRELATION ERROR | CITED | 54 | | ± 2% |
| | MEASURED | 55 | | ± 2% |
| INTERNAL ZERO ERROR | PANEL METER | 56 | | ± 4%Op |
| | DATA RECORDER | 57 | | ± 4%Op |
| INTERNAL SPAN ERROR | PANEL METER | 58 | | ± 4% Op |
| | DATA RECORDER | 59 | | ± 4%Op |
| MONITOR ALIGNMENT ANALYSIS | | 21 | | CENTERED |
| ZERO COMPENSATION | | 60 | | ± 4% Op |
| OPTICAL SURFACE DUST ACCUMULATION | | | | |
| RETROREFLECTOR | | 61 | | ≤ 2% Op |
| TRANSCEIVER | | 62 | | ≤ 2% Op |
| TOTAL | | 63 | | ≤ 4% Op |
| CALIBRATION ERROR ANALYSIS | | | | |
| MEAN ERROR | | | | |
| LOW | | 67 | | |
| | | 76[a] | | |
| MID | | 68 | | |
| | | 77[a] | | |
| HIGH | | 69 | | |
| | | 78[a] | | |
| CONFIDENCE INTERVAL | | | | |
| LOW | | 70 | | |
| MID | | 71 | | |
| HIGH | | 72 | | |
| CALIBRATION ERROR | | | | |
| LOW | | 73 | | ≤ 3% Op |
| MID | | 74 | | ≤ 3% Op |
| HIGH | | 75 | | ≤ 3% Op |

[a] ERROR BASED ON SIX-MINUTE AVERAGED DATA, FROM A SINGLE FILTER INSERTION.

4408 9/91

# EFFLUENT OPACITY CORRECTION OF AUDIT FILTERS

REPRESENTATIVE EQUATION

$$\left[1 - \left[\left[1 - \frac{A + B}{200}\right] \times C\right]\right] \times 100 = D$$

| LOW | | | | MID | | | | HIGH | | | |
|---|---|---|---|---|---|---|---|---|---|---|---|
| A | B | C | D | A | B | C | D | A | B | C | D |
| I-24 | I-26 | I-62 | I-65 | I-26 | I-28 | I-63 | I-66 | I-28 | I-30 | I-64 | I-67 |
| I-30 | I-32 | I-62 | I-68 | I-32 | I-34 | I-63 | I-69 | I-34 | I-36 | I-64 | I-70 |
| I-36 | I-38 | I-62 | I-71 | I-38 | I-40 | I-63 | I-72 | I-40 | I-42 | I-64 | I-73 |
| I-42 | I-44 | I-62 | I-74 | I-44 | I-46 | I-63 | I-75 | I-46 | I-48 | I-64 | I-76 |
| I-48 | I-50 | I-62 | I-77 | I-50 | I-52 | I-63 | I-78 | I-52 | I-54 | I-64 | I-79 |
| I-55 | I-57 | I-62 | I-80 | I-57 | I-59 | I-63 | I-81 | I-59 | I-61 | I-64 | I-82 |

4408 9/91

## AUDIT DATA SHEET
## LAND COMBUSTION MODEL 4500 OPACITY MONITOR
## (Continued)

---

**ZERO COMPENSATION (% OP):**

60 _____ (BLANK 12) = _____

**OPTICAL SURFACE DUST ACCUMULATION (% Op):**

61 Retroreflector _____ (BLANK 17) - _____ (BLANK 18) = _____

62 Transceiver _____ (BLANK 19) - _____ (BLANK 20) = _____

63 Total _____ (BLANK 61) + _____ (BLANK 62) = _____

**OPLR AND ZERO OFFSET CORRECTION OF AUDIT FILTERS (% OP):**

64 Low:

$$\left[1 - \left[\left[1 - \frac{\text{(BLANK 24)}}{100}\right]^{2 \times \text{(BLANK 13)}} \times \left[1 - \frac{\text{(BLANK 48)}}{100}\right]\right]\right] \times 100 = _____$$

65 Mid:

$$\left[1 - \left[\left[1 - \frac{\text{(BLANK 25)}}{100}\right]^{2 \times \text{(BLANK 13)}} \times \left[1 - \frac{\text{(BLANK 48)}}{100}\right]\right]\right] \times 100 = _____$$

66 High:

$$\left[1 - \left[\left[1 - \frac{\text{(BLANK 26)}}{100}\right]^{2 \times \text{(BLANK 13)}} \times \left[1 - \frac{\text{(BLANK 48)}}{100}\right]\right]\right] \times 100 = _____$$

4408 9/91

**DYNATRON MODEL 1100 OPACITY MONITOR**
**PERFORMANCE AUDIT DATA SUMMARY**
**(INCREMENTAL CAL ERROR PROCEDURE)**

AUDITOR _____ DATE _____

SOURCE _____ UNIT _____

RESULTS CHECKED BY _____ DATE _____

| PARAMETER | | BLANK NO. | AUDIT RESULT | SPECIFICATION |
|---|---|---|---|---|
| FAULT LAMPS | | | | |
| LAMP | | 7 | | OFF |
| WINDOW | | 8 | | OFF |
| AIR FLOW | | 9 | | OFF |
| STACK EXIT CORRELATION ERROR | | 51 | | ± 2% |
| INTERNAL ZERO ERROR | PANEL METER | 52 | | ± 4%Op |
| | DATA RECORDER | 53 | | ± 4%Op |
| INTERNAL SPAN ERROR | PANEL METER | 54 | | ± 4%Op |
| | DATA RECORDER | 55 | | ± 4%Op |
| MONITOR ALIGNMENT ANALYSIS | | 20 | | CENTERED |
| OPTICAL SURFACE DUST ACCUMULATION | | | | |
| RETROREFLECTOR | | 56 | | ≤ 2% Op |
| TRANSCEIVER | | 57 | | ≤ 2% Op |
| TOTAL | | 58 | | ≤ 4% Op |
| CALIBRATION ERROR ANALYSIS | | | | |
| MEAN ERROR | | | | |
| LOW | | I-83 | | |
| | | I-92[a] | | |
| MID | | I-84 | | |
| | | I-93[a] | | |
| HIGH | | I-85 | | |
| | | I-94[a] | | |
| CONFIDENCE INTERVAL | | | | |
| LOW | | I-86 | | |
| MID | | I-87 | | |
| HIGH | | I-88 | | |
| CALIBRATION ERROR | | | | |
| LOW | | I-89 | | ≤ 3% Op |
| MID | | I-90 | | ≤ 3% Op |
| HIGH | | I-91 | | ≤ 3% Op |

[a] ERROR BASED ON SIX-MINUTE AVERAGED DATA, FROM A SINGLE FILTER INSERTION.

## AUDIT DATA SHEET
## LAND COMBUSTION MODEL 4500 OPACITY MONITOR
## (Continued)

[REMOVE THE AUDIT FILTERS FROM THE PROTECTIVE COVERS. INSPECT AND CLEAN EACH FILTER.]

[INSERT EACH FILTER IN THE JIG, WAIT APPROXIMATELY 2 MINUTES PER FILTER FOR A CLEAR RESPONSE, AND RECORD THE OPACITY VALUE REPORTED FROM THE OPACITY DATA RECORDER.]

[REPEAT THE PROCESS 5 TIMES FOR EACH FILTER.]

[IF THE JIG ZERO VALUE CHANGES BY MORE THAN 1.0% OPACITY DURING ANY OF THE RUNS, READJUST JIG ZERO TO THE ORIGINAL VALUE AND REPEAT THE RUN.]

| ZERO | LOW | MID | HIGH | ZERO |
|---|---|---|---|---|
| | | | | |
| | | | | |
| | | | | |
| | | | | |
| | | | | |

[IF SIX-MINUTE INTEGRATED DATA ARE AVAILABLE, ALLOW 13 MINUTES EACH FOR AN ADDITIONAL RUN OF THE ZERO, LOW, MID, HIGH, AND ZERO.]

| ZERO | LOW | MID | HIGH | ZERO |
|---|---|---|---|---|
| | | | | |

[REMOVE AUDIT THE JIG AND CLOSE THE TRANSCEIVER.]

REACTIVATE ZERO COMPENSATION

[IF THE ZERO COMPENSATION WAS DEFEATED FOR THE CALIBRATION ERROR TEST, REMOVE THE LAMP ACCESS COVER, MOVE THE AUTO COMP SWITCH TO THE "DOWN" POSITION AND REPLACE THE LAMP ACCESS COVER.]

| | YES | NO |
|---|---|---|
| 27 Zero compensation function reactivated? | | |

[ENTER NO IF THE ZERO COMPENSATION WAS NOT DEFEATED FOR THE CALIBRATION ERROR TEST.]

[RETURN TO CONTROL UNIT LOCATION.]

RESET CONTROL UNIT PARAMETERS

[ACCESS THE CONSTANTS MENU AND RETURN THE CALIBRATION FREQUENCY, THE OUTPUT RANGE 1, AND THE OUTPUT RANGE 2 SETTINGS TO THE ORIGINAL POSITIONS AS INDICATED IN THE CORRESPONDING BLANKS.]

| Parameter | BLANK NO. |
|---|---|
| Calibration Frequency | 14 |
| Output Range 1 | 15 |
| Output Range 2 | 16 |

[OBTAIN A COPY OF THE AUDIT DATA FROM THE OPACITY DATA RECORDER AND ENSURE THAT THE DATA CAN BE CLEARLY READ AND INTERPRETED.]

4408 9/91

# THERMO ENVIRONMENTAL INSTRUMENTS MODEL 400 TRANSMISSOMETER AND MODEL 500 CONTROL UNIT

SOURCE IDENTIFICATION: _____ CORPORATION: _____

PROCESS UNIT/STACK IDENTIFICATION: _____ PLANT/SITE: _____

AUDITOR: _____ REPRESENTING: _____

ATTENDEES: _____ REPRESENTING: _____

_____ REPRESENTING: _____

_____ REPRESENTING: _____

_____ REPRESENTING: _____

DATE: _____

**PRELIMINARY DATA**

1 Stack exit inside diameter (FT) = $L_x$ _____

2 Stack (or duct) inside diameter (or width) at the transmissometer location (FT) = $L_t$ _____

3 Calculated STR = $L_x / L_t$ _____

4 Source-cited STR value _____

5 Source-cited zero automatic calibration value (% opacity) _____

6 Source-cited span automatic calibration value (% opacity) _____

[GO TO DATA RECORDER LOCATION.]

[INSPECT THE DATA RECORDING SYSTEM AND MARK WITH "OPACITY AUDIT", AUDITOR'S NAME, AFFILIATION, DATE, SOURCE, PROCESS UNIT/STACK IDENTIFICATION, AND THE TIME OF DAY.]

[GO TO CONTROL UNIT LOCATION.]

**FAULT LAMP INSPECTION**

| | | ON | OFF |
|---|---|---|---|
| 7 | CAL FAIL [Excessive zero and/or span error] | | |
| 8 | DIRTY WINDOW [Excessive dirt on transceiver optics] | | |
| 9 | PURGE AIR [Insufficient purge air flow] | | |
| 10 | STACK POWER [No power to transmissometer] | | |
| 11 | LAMP FAILURE [Insufficient measurement lamp intensity] | | |
| 12 | ALARM [Effluent opacity exceeds source-selected limit] | | |

**ZERO CHECK**

[PRESS THE "ZERO/CAL" SWITCH.]

[READ THE ZERO CALIBRATION VALUE FROM THE PANEL METER AND THE DATA RECORDER.]

13 Panel meter zero calibration value (% Op) _____

14 Opacity data recorder zero calibration value (% Op) _____

**SPAN CHECK**

[PRESS THE "SPAN/CAL" SWITCH.]

[READ THE SPAN CALIBRATION VALUE FROM THE PANEL METER AND THE DATA RECORDER.]

15 Panel Meter span calibration value (% Op) _____

16 Opacity data recorder span calibration value (% Op) _____

[GO TO TRANSMISSOMETER LOCATION.]

# AUDIT DATA SHEET
# LAND COMBUSTION MODEL 4500 OPACITY MONITOR
# (Continued)

---

ZERO COMPENSATION CHECK

[PRESS THE "SYSTEM DATA" KEY. PRESS THE "ENTER" KEY UNTIL THE ZERO COMPENSATION VALUE IS DISPLAYED.]

12 Zero compensation value (% Op) _____

OPLR CHECK AND CONTROL UNIT ADJUSTMENTS

[PRESS THE "CONSTANTS" KEY. ENTER THE NUMBER 10 AS THE ENTRY CODE USING THE "YES" (▲) KEY AND PRESS THE "ENTER" KEY. PRESS THE "ENTER" KEY UNTIL THE OPLR IS DISPLAYED.]

13 Measured OPLR _____

[IF THE OPLR IS NOT MEASURED, TRANSPOSE THE VALUE IN (BLANK 4) TO (BLANK 13).]

[PRESS THE "ENTER" KEY UNTIL THE AUTOMATIC CALIBRATION FREQUENCY IS DISPLAYED.]

14 Original automatic calibration frequency setting _____

[SET THE AUTOMATIC CALIBRATION FREQUENCY TO "00" USING THE "YES" (▲) AND "NO" (▼) KEYS.]

[PRESS THE "ENTER" KEY UNTIL THE OUTPUT RANGE 1 SETTING IS DISPLAYED.]

15 Original output range 1 setting _____

[SET OUTPUT RANGE 1 TO 100% USING THE "YES" (▲) AND "NO" (▼) KEYS.]

[PRESS THE "ENTER" KEY UNTIL THE OUTPUT RANGE 2 SETTING IS DISPLAYED.]

16 Original output range 2 setting _____

[SET OUTPUT RANGE 2 TO 100% USING THE "YES" (▲) AND "NO" (▼) KEYS.]

[PRESS THE SYSTEM DATA KEY. PRESS THE "ENTER" KEY UNTIL INSTANTANEOUS EFFLUENT OPACITY VALUES ARE DISPLAYED.]

[GO TO TRANSMISSOMETER LOCATION.]

---

RETROREFLECTOR DUST ACCUMULATION CHECK

17 Pre-cleaning effluent opacity (% Op) _____

[Open the retroreflector, inspect and clean the retroreflector optical surface, and close retroreflector.]

18 Post-cleaning effluent opacity (% Op) _____

[Go to transceiver location.]

4408 9/91

## AUDIT DATA SHEET
## THERMO ENVIRONMENTAL INSTRUMENTS MODEL 400 TRANSMISSOMETER AND MODEL 500 CONTROL UNIT
## (Continued)

[REMOVE THE AUDIT FILTERS FROM THE PROTECTIVE COVERS. INSPECT AND CLEAN EACH FILTER.]

[INSERT A FILTER IN THE JIG. WAIT APPROXIMATELY TWO MINUTES AND RECORD THE OPACITY VALUES REPORTED BY THE OPACITY DATA RECORDER. REPEAT THE PROCESS 5 TIMES FOR EACH FILTER.]

[IF THE JIG ZERO VALUES CHANGE BY MORE THAN 1% OPACITY DURING ANY OF THE RUNS, READJUST JIG ZERO TO ORIGINAL VALUE AND REPEAT THE RUN.]

| ZERO | LOW | MID | HIGH | ZERO |
|---|---|---|---|---|
| _____ | _____ | _____ | _____ | _____ |
| | _____ | _____ | _____ | _____ |
| | _____ | _____ | _____ | _____ |
| | _____ | _____ | _____ | _____ |
| | _____ | _____ | _____ | _____ |

[IF SIX-MINUTE INTEGRATED DATA ARE ALSO AVAILABLE. ALLOW 13 MINUTES EACH FOR AN ADDITIONAL RUN OF THE ZERO, LOW, MID, HIGH, AND ZERO READINGS.]

| ZERO | LOW | MID | HIGH | ZERO |
|---|---|---|---|---|
| _____ | _____ | _____ | _____ | _____ |

[TURN CHOPPER OFF, REMOVE AUDIT JIG, RESTART CHOPPER, AND CLOSE TRANSCEIVER.]

[RETURN TO CONTROL UNIT LOCATION.]

[OBTAIN A COPY OF THE AUDIT DATA FROM THE OPACITY DATA RECORDER AND ENSURE THAT THE DATA CAN BE CLEARLY READ AND INTERPRETED.]

[READ AND TRANSCRIBE FINAL CALIBRATION ERROR DATA.]

| ZERO | LOW | MID | HIGH | ZERO |
|---|---|---|---|---|
| 25 _____ | 26 _____ | 27 _____ | 28 _____ | 29 _____ |
| | 30 _____ | 31 _____ | 32 _____ | 33 _____ |
| | 34 _____ | 35 _____ | 36 _____ | 37 _____ |
| | 38 _____ | 39 _____ | 40 _____ | 41 _____ |
| | 42 _____ | 43 _____ | 44 _____ | 45 _____ |

[SIX-MINUTE AVERAGE DATA, IF APPLICABLE.]

| | | | | |
|---|---|---|---|---|
| 46 _____ | 47 _____ | 48 _____ | 49 _____ | 50 _____ |

# APPENDIX J.

## Land Combustion Model 4500 Audit Data Forms

# CALIBRATION ERROR CALCULATIONS

| LOW-RANGE DIFFERENCE | | | $\Delta_L$ | $\Delta_L^2$ | ITEM NO. | MID-RANGE DIFFERENCE | | | $\Delta_M$ | $\Delta_M^2$ | ITEM NO. | HIGH RANGE DIFFERENCE | | | $\Delta_H$ | $\Delta_H^2$ |
|---|---|---|---|---|---|---|---|---|---|---|---|---|---|---|---|---|
| (BLANK 26) | (BLANK 59) | = | | | | (BLANK 27) | (BLANK 60) | = | | | | (BLANK 28) | (BLANK 61) | = | | |
| (BLANK 30) | (BLANK 59) | = | | | | (BLANK 31) | (BLANK 60) | = | | | | (BLANK 32) | (BLANK 61) | = | | |
| (BLANK 34) | (BLANK 59) | = | | | | (BLANK 35) | (BLANK 60) | = | | | | (BLANK 36) | (BLANK 61) | = | | |
| (BLANK 38) | (BLANK 59) | = | | | | (BLANK 39) | (BLANK 60) | = | | | | (BLANK 40) | (BLANK 61) | = | | |
| (BLANK 42) | (BLANK 59) | = | | | | (BLANK 43) | (BLANK 60) | = | | | | (BLANK 44) | (BLANK 61) | = | | |

$\Sigma\Delta_L$ = _____ $\Sigma\Delta_L^2$ = _____

$\Sigma\Delta_M$ = _____ $\Sigma\Delta_M^2$ = _____

$\Sigma\Delta_H$ = _____ $\Sigma\Delta_H^2$ = _____

**MEAN ERROR = $\overline{ME}_L$**

$$\overline{ME}_L = \frac{\Sigma\Delta_L}{n} = \frac{(\text{.....})}{(\text{.....})}$$

$\overline{ME}_L$ = _____

**MID-RANGE MEAN ERROR = $\overline{ME}_M$**

$$\overline{ME}_M = \frac{\Sigma\Delta_M}{n} = \frac{(\text{.....})}{(\text{.....})}$$

63 $\overline{ME}_M$ = _____

**HIGH-RANGE MEAN ERROR = $\overline{ME}_H$**

$$\overline{ME}_H = \frac{\Sigma\Delta_H}{n} = \frac{(\text{.....})}{(\text{.....})}$$

64 $\overline{ME}_H$ = _____

**CONFIDENCE INTERVAL = $CI_L$**

$$CI_L = ((n \times \Sigma\Delta_L^2) - (\Sigma\Delta_L)^2)^{0.5} \times 0.2776$$

$$CI_L = ((____ \times ____) - (____)^2)^{0.5} \times 0.2776$$

$CI_L$ = _____

**CONFIDENCE INTERVAL = $CI_M$**

$$CI_M = ((n \times \Sigma\Delta_M^2) - (\Sigma\Delta_M)^2)^{0.5} \times 0.2776$$

$$CI_M = ((____ \times ____) - (____)^2)^{0.5} \times 0.2776$$

66 $CI_M$ = _____

**CONFIDENCE INTERVAL = $CI_H$**

$$CI_H = ((n \times \Sigma\Delta_H^2) - (\Sigma\Delta_H)^2)^{0.5} \times 0.2776$$

$$CI_H = ((____ \times ____) - (____)^2)^{0.5} \times 0.2776$$

67 $CI_H$ = _____

**CALIBRATION ERROR = $CE_L$**

$$CE_L = |\overline{ME}_L| + CI_L$$

$$CE_L = |____| + (____)$$

$CE_L$ = _____

**CALIBRATION ERROR = $CE_M$**

$$CE_M = |\overline{ME}_M| + CI_M$$

$$CE_M = |____| + (____)$$

69 $CE_M$ = _____

**CALIBRATION ERROR = $CE_H$**

$$CE_H = |\overline{ME}_H| + CI_H$$

$$CE_H = |____| + (____)$$

70 $CE_H$ = _____

**SIX-MINUTE AVERAGED ERROR**

$E(6)_L$ = ------- (BLANK 47) − ------- (BLANK 59)

$E(6)_L$ = _____

$E(6)_M$ = ------- (BLANK 48) − ------- (BLANK 60)

72 $E(6)_M$ = _____

$E(6)_H$ = ------- (BLANK 49) − ------- (BLANK 61)

73 $E(6)_H$ = _____

# CALIBRATION ERROR CALCULATIONS

| LOW-RANGE DIFFERENCE | | $\Delta_L$ | $\Delta_L^2$ |
|---|---|---|---|
| (BLANK 26) − | (BLANK 59) = | _____ | _____ |
| (BLANK 30) − | (BLANK 59) = | _____ | _____ |
| (BLANK 34) − | (BLANK 59) = | _____ | _____ |
| (BLANK 38) − | (BLANK 59) = | _____ | _____ |
| (BLANK 42) − | (BLANK 59) = | _____ | _____ |

$\Sigma\Delta_L$ = _____ $\Sigma\Delta_L^2$ = _____

| ITEM NO. | MID-RANGE DIFFERENCE | | $\Delta_M$ | $\Delta_M^2$ |
|---|---|---|---|---|
| | (BLANK 27) − | (BLANK 60) = | _____ | _____ |
| | (BLANK 31) − | (BLANK 60) = | _____ | _____ |
| | (BLANK 35) − | (BLANK 60) = | _____ | _____ |
| | (BLANK 39) − | (BLANK 60) = | _____ | _____ |
| | (BLANK 43) − | (BLANK 60) = | _____ | _____ |

$\Sigma\Delta_M$ = _____ $\Sigma\Delta_M^2$ = _____

| ITEM NO. | HIGH RANGE DIFFERENCE | | $\Delta_H$ | $\Delta_H^2$ |
|---|---|---|---|---|
| | (BLANK 28) − | (BLANK 61) = | _____ | _____ |
| | (BLANK 32) − | (BLANK 61) = | _____ | _____ |
| | (BLANK 36) − | (BLANK 61) = | _____ | _____ |
| | (BLANK 40) − | (BLANK 61) = | _____ | _____ |
| | (BLANK 44) − | (BLANK 61) = | _____ | _____ |

$\Sigma\Delta_H$ = _____ $\Sigma\Delta_H^2$ = _____

**MEAN ERROR = $\overline{ME}_L$**

$$\overline{ME}_L = \frac{\Sigma\Delta_L}{n} = \frac{(\text{.....})}{(\text{.....})}$$

$\overline{ME}_L$ = _____

**MID-RANGE MEAN ERROR = $\overline{ME}_M$**

$$\overline{ME}_M = \frac{\Sigma\Delta_M}{n} = \frac{(\text{.....})}{(\text{.....})}$$

63 $\overline{ME}_M$ = _____

**HIGH-RANGE MEAN ERROR = $\overline{ME}_H$**

$$\overline{ME}_H = \frac{\Sigma\Delta_H}{n} = \frac{(\text{.....})}{(\text{.....})}$$

64 $\overline{ME}_H$ = _____

**CONFIDENCE INTERVAL = $CI_L$**

$$CI_L = ((n \times \Sigma\Delta_L^2) - (\Sigma\Delta_L)^2)^{0.5} \times 0.2776$$

$$CI_L = ((____ \times ____) - (____)^2)^{0.5} \times 0.2776$$

$CI_L$ = _____

**CONFIDENCE INTERVAL = $CI_M$**

$$CI_M = ((n \times \Sigma\Delta_M^2) - (\Sigma\Delta_M)^2)^{0.5} \times 0.2776$$

$$CI_M = ((____ \times ____) - (____)^2)^{0.5} \times 0.2776$$

66 $CI_M$ = _____

**CONFIDENCE INTERVAL = $CI_H$**

$$CI_H = ((n \times \Sigma\Delta_H^2) - (\Sigma\Delta_H)^2)^{0.5} \times 0.2776$$

$$CI_H = ((____ \times ____) - (____)^2)^{0.5} \times 0.2776$$

67 $CI_H$ = _____

**CALIBRATION ERROR = $CE_L$**

$CE_L = |\overline{ME}_L| + CI_L$

$CE_L = |____| + (____)$

$CE_L$ = _____

**CALIBRATION ERROR = $CE_M$**

$CE_M = |\overline{ME}_M| + CI_M$

$CE_M = |____| + (____)$

69 $CE_M$ = _____

**CALIBRATION ERROR = $CE_H$**

$CE_H = |\overline{ME}_H| + CI_H$

$CE_H = |____| + (____)$

70 $CE_H$ = _____

**SIX-MINUTE AVERAGED ERROR**

$E(6)_L$ = ------- (BLANK 47) − ------- (BLANK 59)

$E(6)_L$ = _____

$E(6)_M$ = ------- (BLANK 48) − ------- (BLANK 60)

72 $E(6)_M$ = _____

$E(6)_H$ = ------- (BLANK 49) − ------- (BLANK 61)

73 $E(6)_H$ = _____

# APPENDIX F.

## Thermo Environmental Instruments Model 1000A Audit Data Forms

## AUDIT DATA SHEET
## UNITED SCIENCES, INC. MODEL 500C OPACITY MONITOR
## (Continued)

[REMOVE THE AUDIT FILTERS FROM THE PROTECTIVE COVERS. INSPECT AND CLEAN EACH FILTER.]

[INSERT EACH FILTER IN THE AUDIT JIG. WAIT APPROXIMATELY TWO MINUTES AND RECORD THE OPACITY VALUES REPORTED BY THE OPACITY DATA RECORDER. REPEAT THE PROCESS 5 TIMES FOR EACH FILTER.]

[IF THE JIG ZERO VALUE CHANGES BY MORE THAN 1.0% OPACITY DURING ANY OF THE RUNS, READJUST THE JIG ZERO TO THE ORIGINAL VALUE AND REPEAT THE RUN.]

| ZERO | LOW | MID | HIGH | ZERO |
|---|---|---|---|---|
| _____ | _____ | _____ | _____ | _____ |
| | _____ | _____ | _____ | _____ |
| | _____ | _____ | _____ | _____ |
| | _____ | _____ | _____ | _____ |
| | _____ | _____ | _____ | _____ |

[IF SIX-MINUTE INTEGRATED DATA ARE AVAILABLE. ALLOW 13 MINUTES EACH FOR AN ADDITIONAL RUN OF THE ZERO, LOW, MID, HIGH, AND ZERO READINGS.]

| ZERO | LOW | MID | HIGH | ZERO |
|---|---|---|---|---|
| _____ | _____ | _____ | _____ | _____ |

[REMOVE THE AUDIT JIG. CLOSE AND SECURE THE TRANSCEIVER. MOVE THE "RUN/TEST" SWITCH TO THE "RUN" POSITION. CLOSE AND SECURE THE J-BOX.]

[RETURN TO THE DATA RECORDER LOCATION.]

[OBTAIN A COPY OF THE AUDIT DATA FROM THE OPACITY DATA RECORDER AND ENSURE THAT THE DATA CAN BE CLEARLY READ AND INTERPRETED.]

[READ AND TRANSCRIBE FINAL CALIBRATION ERROR DATA.]

| ZERO | LOW | MID | HIGH | ZERO |
|---|---|---|---|---|
| 25 _____ | 26 _____ | 27 _____ | 28 _____ | 29 _____ |
| | 30 _____ | 31 _____ | 32 _____ | 33 _____ |
| | 34 _____ | 35 _____ | 36 _____ | 37 _____ |
| | 38 _____ | 39 _____ | 40 _____ | 41 _____ |
| | 42 _____ | 43 _____ | 44 _____ | 45 _____ |

[SIX-MINUTE AVERAGE DATA, IF APPLICABLE.]

| | | | | |
|---|---|---|---|---|
| 46 _____ | 47 _____ | 48 _____ | 49 _____ | 50 _____ |

4408 9/91

# AUDIT DATA SHEET
# THERMO ENVIRONMENTAL INSTRUMENTS MODEL 1000A
# (Continued)

---

**RETROREFLECTOR DUST ACCUMULATION CHECK**

9 Pre-cleaning effluent opacity (% Op) _____

[Inspect and clean optical window.]

10 Post-cleaning effluent opacity (% Op) _____

[Go to transceiver location.]

**TRANSCEIVER DUST ACCUMULATION CHECK**

11 Pre-cleaning effluent opacity (% Op) _____

[Inspect and clean optical window.]

12 Post-cleaning effluent opacity (% Op) _____

**CALIBRATION ERROR CHECK**

[INSTALL THE FILTER HOLDER ASSEMBLY ON THE RETROREFLECTOR.]

[AVOID EYE CONTACT WITH THE UV LIGHT SOURCE.]

[RECORD THE AUDIT FILTER DATA.]

| | FILTER | SERIAL NO. | % OPACITY |
|---|---|---|---|
| 13 | LOW | | |
| 14 | MED | | |
| 15 | HIGH | | |

[REMOVE AUDIT FILTERS FROM PROTECTIVE COVERS, INSPECT, AND CLEAN EACH FILTER.]

[RECORD THE EFFLUENT OPACITY VALUE FROM THE OPACITY DATA RECORDER.]

[INSERT A FILTER, WAIT APPROXIMATELY TWO MINUTES, AND RECORD THE OPACITY VALUE REPORTED BY THE OPACITY DATA RECORDER.]

[REMOVE THE FILTER AND RECORD THE EFFLUENT OPACITY.]

[REPEAT THIS PROCESS FIVE TIMES FOR EACH FILTER.]

| EFFLUENT | LOW | EFFLUENT | MID | EFFLUENT | HIGH |
|---|---|---|---|---|---|
| | | | | | |
| | | | | | |
| | | | | | |
| | | | | | |
| | | | | | |
| | | | | | |

[IF SIX-MINUTE INTEGRATED DATA ARE ALSO AVAILABLE, ALLOW 13 MINUTES EACH FOR AN ADDITIONAL RUN OF THE EFFLUENT LOW, MID, AND HIGH READINGS.]

| EFFLUENT | LOW | EFFLUENT | MID | EFFLUENT | HIGH | EFFLUENT |
|---|---|---|---|---|---|---|
| | | | | | | |

[CLOSE THE RETROREFLECTOR HOUSING.]

[RETURN TO CONTROL UNIT LOCATION.]

# AUDIT DATA SHEET
# UNITED SCIENCES, INC. MODEL 500C OPACITY MONITOR

SOURCE IDENTIFICATION: _____ CORPORATION: _____

PROCESS UNIT/STACK IDENTIFICATION: _____ PLANT/SITE: _____

AUDITOR: _____ REPRESENTING: _____

ATTENDEES: _____ REPRESENTING: _____

_____ REPRESENTING: _____

_____ REPRESENTING: _____

_____ REPRESENTING: _____

DATE: _____

PRELIMINARY DATA

1 Stack exit inside diameter (FT) = $L_x$ _____

2 Stack (or duct) inside diameter (or width) at the transmissometer location (FT) = $L_t$ _____

3 Calculated STR = $L_x / L_t$ _____

4 Source-cited STR value _____

5 Source-cited zero automatic calibration value (% opacity) _____

6 Source-cited span automatic calibration value (% opacity) _____

[GO TO DATA RECORDER LOCATION.]

DATA ACQUISITION SYSTEM CHECK

[INSPECT DATA RECORDING SYSTEM AND MARK WITH "OPACITY AUDIT", AUDITOR'S NAME, AFFILIATION, DATE, SOURCE, PROCESS UNIT/STACK IDENTIFICATION, AND THE TIME OF DAY.]

[LOCATE THE ZERO AND SPAN DATA RECORDED DURING THE MOST RECENT AUTOMATIC CALIBRATION CYCLE.]

7 Data recorder zero calibration value (% Op) _____

8 Data recorder span calibration value (% Op) _____

[GO TO CONTROL UNIT LOCATION.]

FAULT LAMP CHECKS

| | | ON | OFF |
|---|---|---|---|
| 9 | INST MALF [consult manual or source personnel for cause of system fault] | | |
| 10 | CAL FAIL [zero/span error] | | |
| 11 | PURGE FAIL [insufficient purge air flow] | | |
| 12 | STACK PWR FAIL [no power to transmissometer] | | |

ZERO CHECK

[MOVE THE MODE SWITCH TO THE ZERO POSITION AND READ THE ZERO CALIBRATION VALUE FROM THE PANEL METER.]

13 Panel meter zero calibration value (% Op) _____

DIRT COMPENSATION CHECK

[PRESS AND HOLD THE ALARM "SET 1" AND "SET 2" BUTTONS SIMULTANEOUSLY. READ THE DIRT COMPENSATION VALUE FROM THE LEFT HAND PANEL METER.]

14 Dirt compensation value (% Op) _____

SPAN CHECK

[MOVE THE MODE SWITCH TO THE SPAN POSITION AND READ THE SPAN CALIBRATION VALUE FROM THE PANEL METER.]

15 Panel Meter span calibration value (% Op) _____

[RETURN THE MODE SWITCH TO THE "NORMAL" POSITION.]

STR CHECK

[OPEN THE FRONT PANEL OF THE CONTROL UNIT AND PRESS SWITCH S2. RECORD THE STR DISPLAYED ON THE FRONT PANEL METER.]

16 STR value _____

[IF THE STR IS NOT MEASURED, TRANSPOSE THE VALUE RECORDED IN (BLANK 4) TO (BLANK 16).]

[GO TO THE TRANSMISSOMETER LOCATION.]

4408 9/91

# EFFLUENT OPACITY CORRECTION OF AUDIT FILTERS

REPRESENTATIVE EQUATION

$$\left[1 - \left[\left[1 - \frac{A + B}{200}\right] \times C\right]\right] \times 100 = D$$

| LOW | | | | MID | | | | HIGH | | | |
|---|---|---|---|---|---|---|---|---|---|---|---|
| A | B | C | D | A | B | C | D | A | B | C | D |
| 16 | 18 | 54 | 57 | 18 | 20 | 55 | 58 | 20 | 22 | 56 | 59 |
| 22 | 24 | 54 | 60 | 24 | 26 | 55 | 61 | 26 | 28 | 56 | 62 |
| 28 | 30 | 54 | 63 | 30 | 32 | 55 | 64 | 32 | 34 | 56 | 65 |
| 34 | 36 | 54 | 66 | 36 | 38 | 55 | 67 | 38 | 40 | 56 | 68 |
| 40 | 42 | 54 | 69 | 42 | 44 | 55 | 70 | 44 | 46 | 56 | 71 |
| 47 | 49 | 54 | 72 | 49 | 51 | 55 | 73 | 51 | 53 | 56 | 74 |

4408 9/91

**ENVIROPLAN MODEL CEMOP-281 OPACITY MONITOR**
**PERFORMANCE AUDIT DATA SUMMARY**

AUDITOR _____ DATE _____

SOURCE _____ UNIT _____

RESULTS CHECKED BY _____ DATE _____

| PARAMETER | | BLANK NO. | AUDIT RESULT | SPECIFICATION |
|---|---|---|---|---|
| FAULT LAMPS | | | | |
| BLOWER FAILURE | | 7 | | OFF |
| FILTER BLOCK | | 8 | | OFF |
| WINDOW | | 9 | | OFF |
| FAULT | | 10 | | OFF |
| STACK EXIT CORRELATION ERROR | | 51 | | ± 2%Op |
| INTERNAL ZERO ERROR | PANEL METER | 52 | | ± 4%Op |
| | DATA RECORDER | 53 | | ± 4%Op |
| INTERNAL SPAN ERROR | PANEL METER | 54 | | ± 4%Op |
| | DATA RECORDER | 55 | | ± 4%Op |
| OPTICAL ALIGNMENT ANALYSIS | | 21 | | CENTERED |
| OPTICAL SURFACE DUST ACCUMULATION | | | | |
| RETROREFLECTOR | | 56 | | ≤ 2% Op |
| TRANSCEIVER | | 57 | | ≤ 2% Op |
| TOTAL | | 58 | | ≤ 4% Op |
| CALIBRATION ERROR ANALYSIS | | | | |
| MEAN ERROR | | | | |
| LOW | | 62 | | |
| | | 71 [a] | | |
| MID | | 63 | | |
| | | 72 [a] | | |
| HIGH | | 64 | | |
| | | 73 [a] | | |
| CONFIDENCE INTERVAL | | | | |
| LOW | | 65 | | |
| MID | | 66 | | |
| HIGH | | 67 | | |
| CALIBRATION ERROR | | | | |
| LOW | | 68 | | ≤ 3% Op |
| MID | | 69 | | ≤ 3% Op |
| HIGH | | 70 | | ≤ 3% Op |

[a] ERROR BASED ON SIX-MINUTE AVERAGED DATA, FROM A SINGLE FILTER INSERTION.

**STACK EXIT CORRELATION ERROR (%):**

87 $\left[ \frac{\text{(BLANK 4)} - \text{(BLANK 3)}}{\text{(BLANK 3)}} \right] \times 100 =$ _____

**ZERO ERROR (% Op):**

88 Opacity data recorder (BLANK 7) − (BLANK 5) = _____

**SPAN ERROR (% Op):**

89 Opacity Data Recorder (BLANK 8) − (BLANK 6) = _____

**OPTICAL SURFACE DUST ACCUMULATION (% Op):**

90 Retroreflector (BLANK 9) − (BLANK 10) = _____

91 Transceiver (BLANK 11) − (BLANK 12) = _____

92 Total (BLANK 90) + (BLANK 91) = _____

CALCULATION OF AUDIT RESULTS

STACK EXIT CORRELATION ERROR (%):

51 $\left[\frac{(\text{BLANK 4}) - (\text{BLANK 3})}{(\text{BLANK 3})}\right] \times 100 =$ _____

ZERO ERROR (% Op):

52 Panel Meter $6.25\left[(\text{BLANK 13}) - 4.0\right] - (\text{BLANK 5}) =$ _____

53 Opacity Data Recorder $(\text{BLANK 14}) - (\text{BLANK 5}) =$ _____

SPAN ERROR (% Op):

54 Panel Meter $6.25\left[(\text{BLANK 15}) - 4.0\right] - (\text{BLANK 6}) =$ _____

55 Opacity Data Recorder $(\text{BLANK 16}) - (\text{BLANK 6}) =$ _____

OPTICAL SURFACE DUST ACCUMULATION (% OP):

56 Retroreflector $(\text{BLANK 17}) - (\text{BLANK 18}) =$ _____

57 Transceiver $(\text{BLANK 19}) - (\text{BLANK 20}) =$ _____

58 Total $(\text{BLANK 56}) + (\text{BLANK 57}) =$ _____

OPTICAL PATHLENGTH CORRECTION FACTOR AND ZERO OFFSET CORRECTION OF AUDIT FILTERS:

59 Low: $\left[1 - \left[\left[1 - \frac{(\text{BLANK 22})}{100}\right]^{(\text{BLANK 4})} \times \left[1 - \frac{(\text{BLANK 45})}{100}\right]\right]\right] \times 100 =$ _____

0 Mid: $\left[1 - \left[\left[1 - \frac{(\text{BLANK 23})}{100}\right]^{(\text{BLANK 4})} \times \left[1 - \frac{(\text{BLANK 45})}{100}\right]\right]\right] \times 100 =$ _____

High: $\left[1 - \left[\left[1 - \frac{(\text{BLANK 24})}{100}\right]^{(\text{BLANK 4})} \times \left[1 - \frac{(\text{BLANK 45})}{100}\right]\right]\right] \times 100 =$ _____

# APPENDIX G.

## Thermo Environmental Instruments
## Model D-R280 AV Audit Data Forms

# AUDIT DATA SHEET
# ENVIROPLAN MODEL CEMOP-281 OPACITY MONITOR
# (Continued)

---

SPAN CHECK

15 Panel meter span calibration value (milliamps) _____

16 Opacity data recorder span calibration value (% Op) _____

[GO TO TRANMISSOMETER LOCATION.]

RETROREFLECTOR DUST ACCUMULATION CHECK

17 Pre-cleaning effluent opacity (% Op) _____

[Inspect and clean optical surface.]

18 Post-cleaning effluent opacity (% Op) _____

[GO TO TRANSCEIVER LOCATION.]

TRANSCEIVER DUST ACCUMULATION CHECK

19 Pre-cleaning effluent opacity (% Op) _____

[Inspect and clean optical surface.]

20 Post-cleaning effluent opacity (% Op) _____

OPTICAL ALIGNMENT CHECK (OPTIONAL)

[LOOK THROUGH ALIGNMENT SIGHT AND DETERMINE IF BEAM IMAGES ARE CENTERED.]

21 Images Centered?

| YES | NO |
|---|---|
| | |

[DRAW LOCATION OF IMAGES IN SIGHT.]

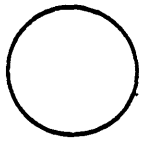

CALIBRATION ERROR CHECK [JIG PROCEDURE]

[INSTALL THE AUDIT JIG ON THE PRIMARY LENS AND ADJUST THE JIG ZERO UNTIL A VALUE OF 4 mA IS READ ON THE REMOTE PANEL METER.]

[MAKE THE FINAL JIG ZERO ADJUSTMENTS BASED ON OPACITY DATA FROM THE DATA RECORDER.]

[RECORD AUDIT FILTER DATA.]

| | FILTER | SERIAL NO. | % OPACITY |
|---|---|---|---|
| 22 | LOW | | |
| 23 | MED | | |
| 24 | HIGH | | |

4408 9/91

# AUDIT DATA SHEET
# THERMO ENVIRONMENTAL INSTRUMENTS D-R280AV OPACITY MONITOR
# (Continued)

---

**SPAN CHECK**

14 Internal span calibration value (milliamps) _____

15 Data recorder span calibration value (% Op) _____

[GO TO TRANMISSOMETER LOCATION.]

**RETROREFLECTOR DUST ACCUMULATION CHECK**

16 Pre-cleaning effluent opacity (% Op) _____

[Inspect and clean the optical surface.]

17 Post-cleaning effluent opacity (% Op) _____

[GO TO TRANSCEIVER LOCATION.]

**TRANSCEIVER DUST ACCUMULATION CHECK**

18 Pre-cleaning effluent opacity (% Op) _____

[Inspect and clean the optical surface and the zero mirror.]

19 Post-cleaning effluent opacity (% Op) _____

**OPTICAL ALIGNMENT CHECK**

[LOOK THROUGH THE ALIGNMENT SIGHT AND DETERMINE IF THE BEAM IMAGES ARE CENTERED.]

20 Images Centered?

| YES | NO |
|---|---|
| | |

[DRAW LOCATION OF IMAGES IN SIGHT.]

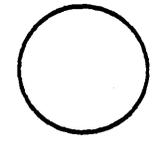

**CALIBRATION ERROR CHECK [JIG PROCEDURE]**

[INSTALL THE AUDIT JIG ON THE PRIMARY LENS AND ADJUST THE JIG ZERO UNTIL A VALUE OF 4 mA IS READ ON THE REMOTE PANEL METER.]

[MAKE FINAL JIG ZERO ADJUSTMENTS BASED ON OPACITY DATA FROM THE DATA RECORDER.]

21 Jig zero value from data recorder (% Op) _____

[RECORD AUDIT FILTER DATA.]

| | FILTER | SERIAL NO. | % OPACITY |
|---|---|---|---|
| 22 | LOW | | |
| 23 | MED | | |
| 24 | HIGH | | |

4408 9/91

# APPENDIX H.

## Enviroplan Model CEMOP-281 Audit Data Forms

## CALCULATION OF AUDIT RESULTS

**STACK EXIT CORRELATION ERROR (%):**

51 $$\left[\frac{(\text{BLANK 4}) - (\text{BLANK 3})}{(\text{BLANK 3})}\right] \times 100 = _____$$

**ZERO ERROR (% Op):**

52 Panel meter $$6.25\left[(\text{BLANK 12}) - 4.0\right] - (\text{BLANK 5}) = _____$$

53 Opacity data recorder $$(\text{BLANK 13}) - (\text{BLANK 5}) = _____$$

**SPAN ERROR (% Op):**

54 Panel Meter $$6.25\left[(\text{BLANK 14}) - 4.0\right] - (\text{BLANK 6}) = _____$$

55 Opacity Data Recorder $$(\text{BLANK 15}) - (\text{BLANK 6}) = _____$$

**OPTICAL SURFACE DUST ACCUMULATION (% OP):**

56 Retroreflector $$(\text{BLANK 16}) - (\text{BLANK 17}) = _____$$

57 Transceiver $$(\text{BLANK 18}) - (\text{BLANK 19}) = _____$$

58 Total $$(\text{BLANK 56}) + (\text{BLANK 57}) = _____$$

**OPTICAL PATHLENGTH CORRECTION FACTOR AND ZERO OFFSET CORRECTION OF AUDIT FILTERS:**

59 Low: $$\left[1 - \left[\left[1 - \frac{(\text{BLANK 22})}{100}\right]^{(\text{BLANK 4})} \times \left[1 - \frac{(\text{BLANK 45})}{100}\right]\right]\right] \times 100 = _____$$

60 Mid: $$\left[1 - \left[\left[1 - \frac{(\text{BLANK 23})}{100}\right]^{(\text{BLANK 4})} \times \left[1 - \frac{(\text{BLANK 45})}{100}\right]\right]\right] \times 100 = _____$$

61 High: $$\left[1 - \left[\left[1 - \frac{(\text{BLANK 24})}{100}\right]^{(\text{BLANK 4})} \times \left[1 - \frac{(\text{BLANK 45})}{100}\right]\right]\right] \times 100 = _____$$

# CALIBRATION ERROR CALCULATION

| LOW-RANGE DIFFERENCE | | | $\Delta_L$ | $\Delta_L^2$ |
|---|---|---|---|---|
| _____ (BLANK 26) | − _____ (BLANK 59) | = | _____ | _____ |
| _____ (BLANK 30) | − _____ (BLANK 59) | = | _____ | _____ |
| _____ (BLANK 34) | − _____ (BLANK 59) | = | _____ | _____ |
| _____ (BLANK 38) | − _____ (BLANK 59) | = | _____ | _____ |
| _____ (BLANK 42) | − _____ (BLANK 59) | = | _____ | _____ |

$\Sigma\Delta_L$ = _____ $\Sigma\Delta_L^2$ = _____

ITEM NO.

| MID-RANGE DIFFERENCE | | | $\Delta_M$ | $\Delta_M^2$ |
|---|---|---|---|---|
| _____ (BLANK 27) | − _____ (BLANK 60) | = | _____ | _____ |
| _____ (BLANK 31) | − _____ (BLANK 60) | = | _____ | _____ |
| _____ (BLANK 35) | − _____ (BLANK 60) | = | _____ | _____ |
| _____ (BLANK 39) | − _____ (BLANK 60) | = | _____ | _____ |
| _____ (BLANK 43) | − _____ (BLANK 60) | = | _____ | _____ |

$\Sigma\Delta_M$ = _____ $\Sigma\Delta_M^2$ = _____

ITEM NO.

| HIGH RANGE DIFFERENCE | | | $\Delta_H$ | $\Delta_H^2$ |
|---|---|---|---|---|
| _____ (BLANK 28) | − _____ (BLANK 61) | = | _____ | _____ |
| _____ (BLANK 32) | − _____ (BLANK 61) | = | _____ | _____ |
| _____ (BLANK 36) | − _____ (BLANK 61) | = | _____ | _____ |
| _____ (BLANK 40) | − _____ (BLANK 61) | = | _____ | _____ |
| _____ (BLANK 44) | − _____ (BLANK 61) | = | _____ | _____ |

$\Sigma\Delta_H$ = _____ $\Sigma\Delta_H^2$ = _____

**MEAN ERROR = $\overline{ME}_L$**

$$\overline{ME}_L = \frac{\Sigma\Delta_L}{n} \frac{(\text{.....})}{(\text{.....})}$$

$\overline{ME}_L$ = _____

**CONFIDENCE INTERVAL = $CI_L$**

$$CI_L = ((n \times \Sigma\Delta_L^2) - (\Sigma\Delta_L)^2)^{0.5} \times 0.2776$$

$$CI_L = ((____ \times ____) - (____)^2)^{0.5} \times 0.2776$$

$CI_L$ = _____

**CALIBRATION ERROR = $CE_L$**

$$CE_L = |\overline{ME}_L| + CI_L$$

$$CE_L = |____| + (____)$$

$CE_L$ = _____

$E(6)_L$ = _____ (BLANK 47) − _____ (BLANK 59) =

$E(6)_L$ = _____

**MEAN ERROR = $\overline{ME}_M$**

$$\overline{ME}_M = \frac{\Sigma\Delta_M}{n} \frac{(\text{.....})}{(\text{.....})}$$

63 $\overline{ME}_M$ = _____

**CONFIDENCE INTERVAL = $CI_M$**

$$CI_M = ((n \times \Sigma\Delta_M^2) - (\Sigma\Delta_M)^2)^{0.5} \times 0.2776$$

$$CI_M = ((____ \times ____) - (____)^2)^{0.5} \times 0.2776$$

66 $CI_M$ = _____

**CALIBRATION ERROR = $CE_M$**

$$CE_M = |\overline{ME}_M| + CI_M$$

$$CE_M = |____| + (____)$$

69 $CE_M$ = _____

**SIX-MINUTE AVERAGED ERROR**

$E(6)_M$ = _____ (BLANK 48) − _____ (BLANK 60) =

72 $E(6)_M$ = _____

**MEAN ERROR = $\overline{ME}_H$**

$$\overline{ME}_H = \frac{\Sigma\Delta_H}{n} \frac{(\text{.....})}{(\text{.....})}$$

64 $\overline{ME}_H$ = _____

**CONFIDENCE INTERVAL = $CI_H$**

$$CI_H = ((n \times \Sigma\Delta_H^2) - (\Sigma\Delta_H)^2)^{0.5} \times 0.2776$$

$$CI_H = ((____ \times ____) - (____)^2)^{0.5} \times 0.2776$$

67 $CI_H$ = _____

**CALIBRATION ERROR = $CE_H$**

$$CE_H = |\overline{ME}_H| + CI_H$$

$$CE_H = |____| + (____)$$

70 $CE_H$ = _____

$E(6)_H$ = _____ (BLANK 49) − _____ (BLANK 61) =

73 $E(6)_H$ = _____

THERMO ENVIRONMENTAL INSTRUMENTS D-R280AV OPACITY MONITOR
PERFORMANCE AUDIT DATA SUMMARY

AUDITOR _____ DATE _____

SOURCE _____ UNIT _____

RESULTS CHECKED BY _____ DATE _____

| PARAMETER | | BLANK NO. | AUDIT RESULT | SPECIFICATION |
|---|---|---|---|---|
| FAULT LAMPS | | | | |
| BLOWER FAILURE | | 7 | | OFF |
| FILTER BLOCK | | 8 | | OFF |
| WINDOW | | 9 | | OFF |
| STACK EXIT CORRELATION ERROR | | 51 | | ± 2%Op |
| INTERNAL ZERO ERROR | PANEL METER | 52 | | ± 4%Op |
| | DATA RECORDER | 53 | | ± 4%Op |
| INTERNAL SPAN ERROR | PANEL METER | 54 | | ± 4%Op |
| | DATA RECORDER | 55 | | ± 4%Op |
| OPTICAL ALIGNMENT ANALYSIS | | 20 | | CENTERED |
| OPTICAL SURFACE DUST ACCUMULATION | | | | |
| RETROREFLECTOR | | 56 | | ≤ 2% Op |
| TRANSCEIVER | | 57 | | ≤ 2% Op |
| TOTAL | | 58 | | ≤ 4% Op |
| CALIBRATION ERROR ANALYSIS | | | | |
| MEAN ERROR | | | | |
| LOW | | 62 | | |
| | | 71 [a] | | |
| MID | | 63 | | |
| | | 72 [a] | | |
| HIGH | | 64 | | |
| | | 73 [a] | | |
| CONFIDENCE INTERVAL | | | | |
| LOW | | 65 | | |
| MID | | 66 | | |
| HIGH | | 67 | | |
| CALIBRATION ERROR | | | | |
| LOW | | 68 | | ≤ 3% Op |
| MID | | 69 | | ≤ 3% Op |
| HIGH | | 70 | | ≤ 3% Op |

[a] ERROR BASED ON SIX-MINUTE AVERAGED DATA, FROM A SINGLE FILTER INSERTION.

4408 9/91

## AUDIT DATA SHEET
## THERMO ENVIRONMENTAL INSTRUMENTS D-R280AV OPACITY MONITOR
## (Continued)

---

[REMOVE THE AUDIT FILTERS FROM THE PROTECTIVE COVERS. INSPECT, AND CLEAN EACH FILTER.]

[INSERT A FILTER, WAIT APPROXIMATELY 2 MINUTES, AND RECORD THE OPACITY VALUE REPORTED BY THE OPACITY DATA RECORDER. REPEAT THE PROCESS 5 TIMES FOR EACH FILTER.]

[IF THE JIG ZERO VALUE CHANGES BY MORE THAN 1.0% OPACITY DURING ANY OF THE RUNS, READJUST THE JIG ZERO TO THE ORIGINAL VALUE AND REPEAT THE RUN.]

| ZERO | LOW | MID | HIGH | ZERO |
|---|---|---|---|---|
| _____ | _____ | _____ | _____ | _____ |
| | _____ | _____ | _____ | _____ |
| | _____ | _____ | _____ | _____ |
| | _____ | _____ | _____ | _____ |
| | _____ | _____ | _____ | _____ |

[IF SIX-MINUTE INTEGRATED DATA ARE AVAILABLE, ALLOW 13 MINUTES EACH FOR AN ADDITIONAL RUN OF THE ZERO, LOW, MID, HIGH, AND ZERO READINGS.]

| ZERO | LOW | MID | HIGH | ZERO |
|---|---|---|---|---|
| _____ | _____ | _____ | _____ | _____ |

[REMOVE THE AUDIT JIG. CLOSE THE TRANSCEIVER HEAD AND THE WEATHER COVER.]

[RETURN TO CONTROL UNIT LOCATION.]

---

<u>CONTROL UNIT ADJUSTMENT RESET</u>

[IF NECESSARY, RESET THE OPACITY RANGE SWITCH TO THE POSITION INDICATED IN BLANK 10.]

[OBTAIN A COPY OF THE AUDIT DATA FROM THE OPACITY DATA RECORDER, AND ENSURE THAT THE DATA CAN BE CLEARLY READ AND INTERPRETED.]

---

[READ AND TRANSCRIBE FINAL CALIBRATION ERROR DATA.]

| ZERO | LOW | MID | HIGH | ZERO |
|---|---|---|---|---|
| 25 _____ | 26 _____ | 27 _____ | 28 _____ | 29 _____ |
| | 30 _____ | 31 _____ | 32 _____ | 33 _____ |
| | 34 _____ | 35 _____ | 36 _____ | 37 _____ |
| | 38 _____ | 39 _____ | 40 _____ | 41 _____ |
| | 42 _____ | 43 _____ | 44 _____ | 45 _____ |

[SIX-MINUTE AVERAGE DATA, IF APPLICABLE.]

| | | | | |
|---|---|---|---|---|
| 46 _____ | 47 _____ | 48 _____ | 49 _____ | 50 _____ |

4408 9/91

# AUDIT DATA SHEET
# ENVIROPLAN MODEL CEMOP-281 OPACITY MONITOR

SOURCE IDENTIFICATION: _____ CORPORATION: _____

PROCESS UNIT/STACK IDENTIFICATION: _____ PLANT/SITE: _____

AUDITOR: _____ REPRESENTING: _____

ATTENDEES: _____ REPRESENTING: _____

_____ REPRESENTING: _____

_____ REPRESENTING: _____

_____ REPRESENTING: _____

DATE: _____

## PRELIMINARY DATA

1 Stack exit inside diameter (FT) = $L_x$ _____

2 Stack (or duct) inside diameter (or width) at transmissometer location (FT) = $L_t$ _____

3 Calculated optical pathlength correction factor = $L_x / L_t$ _____

4 Source-cited optical pathlength correction factor _____

5 Source-cited zero automatic calibration value (% opacity) _____

6 Source-cited span automatic calibration value (% opacity) _____

[GO TO CONTROL UNIT DATA RECORDER LOCATION.]

[INSPECT DATA RECORDING SYSTEM AND MARK WITH "OPACITY AUDIT," AUDITOR'S NAME, AFFILIATION, DATE, SOURCE, PROCESS UNIT/STACK IDENTIFICATION, AND THE TIME OF DAY.]

## FAULT LAMP CHECKS

| | | ON | OFF |
|---|---|---|---|
| 7 | BLOWER [Loss of purge air blower power] | | |
| 8 | FILTER [Inadequate purge air flow] | | |
| 9 | WINDOW [Excessive dirt on transceiver window] | | |
| 10 | FAULT [Additional fault has occured. Note fault code on panel meter and consult the instrument manual.] | | |

## INSTRUMENT RANGE CHECK

11 Instrument range setting _____

[Press the "RANGE" button and record the instrument range. Increase range if too low.]

## ZERO CHECK

[PRESS THE "CALIBR" BUTTON ON THE CONTROL PANEL.]

12 Internal zero value (milliamps) _____

[WAIT TWO MINUTES FOR AUTOMATIC CHANGE TO EXTERNAL ZERO MODE.]

13 Panel meter zero calibration value (milliamps) _____

14 Opacity data recorder zero calibration value (% Op) _____

[WAIT TWO MINUTES FOR AUTOMATIC CHANGE TO EXTERNAL SPAN MODE.]

4408 9/91

# AUDIT DATA SHEET
# THERMO ENVIRONMENTAL INSTRUMENTS MODEL D-R280AV OPACITY MONITOR

SOURCE IDENTIFICATION: _____ CORPORATION: _____

PROCESS UNIT/STACK IDENTIFICATION: _____ PLANT/SITE: _____

AUDITOR: _____ REPRESENTING: _____

ATTENDEES: _____ REPRESENTING: _____

_____ REPRESENTING: _____

_____ REPRESENTING: _____

_____ REPRESENTING: _____

DATE: _____

## PRELIMINARY DATA

1 Stack exit inside diameter (FT) = $L_x$ _____

2 Stack (or duct) inside diameter (or width) at the transmissometer location (FT) = $L_t$ _____

3 Calculated optical pathlength correction factor = $L_x / L_t$ _____

4 Source-cited optical pathlength correction factor _____

5 Source-cited zero automatic calibration value (% opacity) _____

6 Source-cited span automatic calibration value (% opacity) _____

[GO TO CONTROL UNIT / DATA RECORDER LOCATION.]

[INSPECT THE DATA RECORDING SYSTEM AND MARK WITH "OPACITY AUDIT," AUDITOR'S NAME, AFFILIATION, DATE, SOURCE, PROCESS UNIT/STACK IDENTIFICATION, AND THE TIME OF DAY.]

## FAULT LAMP CHECKS

| | | ON | OFF |
|---|---|---|---|
| 7 | BLOWER FAILURE [Loss of purge air blower power] | | |
| 8 | FILTER BLOCK [Inadequate purge air flow] | | |
| 9 | WINDOW [Excessive dirt on transceiver window] | | |

## CONTROL UNIT CHECKS

10 Opacity range switch position _____

[Turn RANGE SWITCH to position "4".]

## ZERO CHECK

[PRESS THE CALIBRATION BUTTON ON THE CONTROL PANEL.]

11 Internal zero value (milliamps) _____

[WAIT TWO MINUTES FOR AUTOMATIC CHANGE TO EXTERNAL ZERO MODE.]

12 Panel meter zero calibration value (milliamps) _____

13 Data recorder zero calibration value (% Op) _____

[WAIT TWO MINUTES FOR AUTOMATIC CHANGE TO EXTERNAL SPAN MODE.]

4408 9/91

# AUDIT DATA SHEET
# ENVIROPLAN MODEL CEMOP-281 OPACITY MONITOR
# (Continued)

[REMOVE THE AUDIT FILTERS FROM THE PROTECTIVE COVERS. INSPECT, AND CLEAN EACH FILTER.]

[INSERT A FILTER, WAIT APPROXIMATELY 2 MINUTES, AND RECORD THE OPACITY VALUE REPORTED BY THE OPACITY DATA RECORDER. REPEAT THE PROCESS 5 TIMES FOR EACH FILTER.]

[IF JIG ZERO VALUES CHANGE BY MORE THAN 1.0% OPACITY DURING ANY OF THE RUNS, READJUST THE JIG ZERO TO THE ORIGINAL VALUE AND REPEAT THE RUN.]

| ZERO | LOW | MID | HIGH | ZERO |
|---|---|---|---|---|
| _____ | _____ | _____ | _____ | _____ |
| | _____ | _____ | _____ | _____ |
| | _____ | _____ | _____ | _____ |
| | _____ | _____ | _____ | _____ |
| | _____ | _____ | _____ | _____ |

[IF SIX-MINUTE INTEGRATED DATA ARE ALSO AVAILABLE, ALLOW 13 MINUTES EACH FOR AN ADDITIONAL RUN OF THE ZERO, LOW, MID, HIGH, AND ZERO READINGS.]

| ZERO | LOW | MID | HIGH | ZERO |
|---|---|---|---|---|
| _____ | _____ | _____ | _____ | _____ |

[REMOVE THE AUDIT JIG, CLOSE THE TRANSCEIVER HEAD AND THE WEATHER COVER.]

[RETURN TO CONTROL UNIT LOCATION.]

---

CONTROL UNIT ADJUSTMENT RESET

[IF NECESSARY, RESET THE OPACITY RANGE SWITCH TO THE POSITION INDICATED IN BLANK 10.]

[OBTAIN A COPY OF THE AUDIT DATA FROM THE OPACITY DATA RECORDER, AND ENSURE THAT THE DATA CAN BE CLEARLY READ AND INTERPRETED.]

---

[READ AND TRANSCRIBE FINAL CALIBRATION ERROR DATA.]

| ZERO | LOW | MID | HIGH | ZERO |
|---|---|---|---|---|
| 25 _____ | 26 _____ | 27 _____ | 28 _____ | 29 _____ |
| | 30 _____ | 31 _____ | 32 _____ | 33 _____ |
| | 34 _____ | 35 _____ | 36 _____ | 37 _____ |
| | 38 _____ | 39 _____ | 40 _____ | 41 _____ |
| | 42 _____ | 43 _____ | 44 _____ | 45 _____ |

[SIX-MINUTE AVERAGE DATA, IF APPLICABLE.]

| | | | | |
|---|---|---|---|---|
| 46 _____ | 47 _____ | 48 _____ | 49 _____ | 50 _____ |

4408 9/91

## THERMO ENVIRONMENTAL INSTRUMENTS MODEL 1000A
## OPACITY MONITOR PERFORMANCE AUDIT DATA SUMMARY

AUDITOR _____ DATE _____

SOURCE _____ UNIT _____

RESULTS CHECKED BY _____ DATE _____

| PARAMETER | BLANK NO. | AUDIT RESULT | SPECIFICATION |
|---|---|---|---|
| STACK EXIT CORRELATION ERROR | 87 | | ± 2% Op |
| INTERNAL ZERO ERROR | 88 | | ± 4% Op |
| INTERNAL SPAN ERROR | 89 | | ± 4% Op |
| OPTICAL SURFACE DUST ACCUMULATION | | | |
| RETROREFLECTOR | 90 | | ≤ 2%Op |
| TRANSCEIVER | 91 | | ≤ 2%Op |
| TOTAL | 92 | | ≤ 4%Op |
| CALIBRATION ERROR ANALYSIS | | | |
| MEAN ERROR | | | |
| LOW | 75 | | |
| | 84 [a] | | |
| MID | 76 | | |
| | 85 [a] | | |
| HIGH | 77 | | |
| | 86 [a] | | |
| CONFIDENCE INTERVAL | | | |
| LOW | 78 | | |
| MID | 79 | | |
| HIGH | 80 | | |
| CALIBRATION ERROR | | | |
| LOW | 81 | | ≤ 3%Op |
| MID | 82 | | ≤ 3%Op |
| HIGH | 83 | | ≤ 3%Op |

[a] ERROR BASED ON SIX-MINUTE AVERAGED DATA, FROM A SINGLE FILTER INSERTION.

4408 9/91

# CALIBRATION ERROR CALCULATION

| LOW-RANGE DIFFERENCE | | | $\Delta_L$ | $\Delta_L^2$ |
|---|---|---|---|---|
| _____ (BLANK 26) | − | _____ (BLANK 59) | = _____ | _____ |
| _____ (BLANK 30) | − | _____ (BLANK 59) | = _____ | _____ |
| _____ (BLANK 34) | − | _____ (BLANK 59) | = _____ | _____ |
| _____ (BLANK 38) | − | _____ (BLANK 59) | = _____ | _____ |
| _____ (BLANK 42) | − | _____ (BLANK 59) | = _____ | _____ |

$\Sigma\Delta_L$ = _____ $\Sigma\Delta_L^2$ = _____

| ITEM NO. | MID-RANGE DIFFERENCE | | | $\Delta_M$ | $\Delta_M^2$ |
|---|---|---|---|---|---|
| | _____ (BLANK 27) | − | _____ (BLANK 60) | = _____ | _____ |
| | _____ (BLANK 31) | − | _____ (BLANK 60) | = _____ | _____ |
| | _____ (BLANK 35) | − | _____ (BLANK 60) | = _____ | _____ |
| | _____ (BLANK 39) | − | _____ (BLANK 60) | = _____ | _____ |
| | _____ (BLANK 43) | − | _____ (BLANK 60) | = _____ | _____ |

$\Sigma\Delta_M$ = _____ $\Sigma\Delta_M^2$ = _____

| ITEM NO. | HIGH RANGE DIFFERENCE | | | $\Delta_H$ | $\Delta_H^2$ |
|---|---|---|---|---|---|
| | _____ (BLANK 28) | − | _____ (BLANK 61) | = _____ | _____ |
| | _____ (BLANK 32) | − | _____ (BLANK 61) | = _____ | _____ |
| | _____ (BLANK 36) | − | _____ (BLANK 61) | = _____ | _____ |
| | _____ (BLANK 40) | − | _____ (BLANK 61) | = _____ | _____ |
| | _____ (BLANK 44) | − | _____ (BLANK 61) | = _____ | _____ |

$\Sigma\Delta_H$ = _____ $\Sigma\Delta_H^2$ = _____

**MEAN ERROR = $\overline{ME}_L$**

$$\overline{ME}_L = \frac{\Sigma\Delta_L}{n} \frac{(\text{.....})}{(\text{.....})}$$

$\overline{ME}_L$ = _____

**CONFIDENCE INTERVAL = $CI_L$**

$$CI_L = ((n \times \Sigma\Delta_L^2) - (\Sigma\Delta_L)^2)^{0.5} \times 0.2776$$

$$CI_L = ((____ \times ____) - (____)^2)^{0.5} \times 0.2776$$

$CI_L$ = _____

**CALIBRATION ERROR = $CE_L$**

$$CE_L = |\overline{ME}_L| + CI_L$$

$$CE_L = |____| + (____)$$

$CE_L$ = _____

$E(6)_L$ = _____ (BLANK 47) − _____ (BLANK 59) =

$E(6)_L$ = _____

**MEAN ERROR = $\overline{ME}_M$**

$$\overline{ME}_M = \frac{\Sigma\Delta_M}{n} \frac{(\text{.....})}{(\text{.....})}$$

63 $\overline{ME}_M$ = _____

**CONFIDENCE INTERVAL = $CI_M$**

$$CI_M = ((n \times \Sigma\Delta_M^2) - (\Sigma\Delta_M)^2)^{0.5} \times 0.2776$$

$$CI_M = ((____ \times ____) - (____)^2)^{0.5} \times 0.2776$$

66 $CI_M$ = _____

**CALIBRATION ERROR = $CE_M$**

$$CE_M = |\overline{ME}_M| + CI_M$$

$$CE_M = |____| + (____)$$

69 $CE_M$ = _____

**SIX-MINUTE AVERAGED ERROR**

$E(6)_M$ = _____ (BLANK 48) − _____ (BLANK 60) =

72 $E(6)_M$ = _____

**MEAN ERROR = $\overline{ME}_H$**

$$\overline{ME}_H = \frac{\Sigma\Delta_H}{n} \frac{(\text{.....})}{(\text{.....})}$$

64 $\overline{ME}_H$ = _____

**CONFIDENCE INTERVAL = $CI_H$**

$$CI_H = ((n \times \Sigma\Delta_H^2) - (\Sigma\Delta_H)^2)^{0.5} \times 0.2776$$

$$CI_H = ((____ \times ____) - (____)^2)^{0.5} \times 0.2776$$

67 $CI_H$ = _____

**CALIBRATION ERROR = $CE_H$**

$$CE_H = |\overline{ME}_H| + CI_H$$

$$CE_H = |____| + (____)$$

70 $CE_H$ = _____

$E(6)_H$ = _____ (BLANK 49) − _____ (BLANK 61) =

73 $E(6)_H$ = _____

# CALIBRATION ERROR CALCULATIONS

| LOW-RANGE DIFFERENCE | | | $\Delta_L$ | $\Delta_L^2$ | ITEM NO. |
|---|---|---|---|---|---|
| (BLANK 17) | (BLANK 57) | = | | | |
| (BLANK 23) | (BLANK 60) | = | | | |
| (BLANK 29) | (BLANK 63) | = | | | |
| (BLANK 35) | (BLANK 66) | = | | | |
| (BLANK 41) | (BLANK 69) | = | | | |

$\Sigma\Delta_L$ = _____ $\Sigma\Delta_L^2$ = _____

| MID-RANGE DIFFERENCE | | | $\Delta_M$ | $\Delta_M^2$ | ITEM NO. |
|---|---|---|---|---|---|
| (BLANK 19) | (BLANK 58) | = | | | |
| (BLANK 25) | (BLANK 61) | = | | | |
| (BLANK 31) | (BLANK 64) | = | | | |
| (BLANK 37) | (BLANK 67) | = | | | |
| (BLANK 44) | (BLANK 70) | = | | | |

$\Sigma\Delta_M$ = _____ $\Sigma\Delta_M^2$ = _____

| HIGH RANGE DIFFERENCE | | | $\Delta_H$ | $\Delta_H^2$ |
|---|---|---|---|---|
| (BLANK 21) | (BLANK 59) | = | | |
| (BLANK 27) | (BLANK 62) | = | | |
| (BLANK 33) | (BLANK 65) | = | | |
| (BLANK 39) | (BLANK 68) | = | | |
| (BLANK 45) | (BLANK 71) | = | | |

$\Sigma\Delta_H$ = _____ $\Sigma\Delta_H^2$ = _____

**MEAN ERROR = $\overline{ME}_L$**

$$\overline{ME}_L = \frac{\Sigma\Delta_L}{n} \frac{(\text{.....})}{(\text{.....})}$$

$\overline{ME}_L$ = _____

**CONFIDENCE INTERVAL = $CI_L$**

$$CI_L = ((n \times \Sigma\Delta_L^2) - (\Sigma\Delta_L)^2)^{0.5} \times 0.2776$$

$$CI_L = ((____ \times ____) - (____)^2)^{0.5} \times 0.2776$$

$CI_L$ = _____

**CALIBRATION ERROR = $CE_L$**

$$CE_L = |\overline{ME}_L| + CI_L$$

$$CE_L = |____| + (____)$$

$CE_L$ = _____

$E(6)_L$ = (BLANK 48) (BLANK 72) =

$E(6)_L$ = _____

**MEAN ERROR = $\overline{ME}_M$**

$$\overline{ME}_M = \frac{\Sigma\Delta_M}{n} \frac{(\text{.....})}{(\text{.....})}$$

76 $\overline{ME}_M$ = _____

**CONFIDENCE INTERVAL = $CI_M$**

$$CI_M = ((n \times \Sigma\Delta_M^2) - (\Sigma\Delta_M)^2)^{0.5} \times 0.2776$$

$$CI_M = ((____ \times ____) - (____)^2)^{0.5} \times 0.2776$$

79 $CI_M$ = _____

**CALIBRATION ERROR = $CE_M$**

$$CE_M = |\overline{ME}_M| + CI_M$$

$$CE_M = |____| + (____)$$

82 $CE_M$ = _____

**SIX-MINUTE AVERAGED ERROR**

$E(6)_M$ = (BLANK 50) (BLANK 73) =

85 $E(6)_M$ = _____

**MEAN ERROR = $\overline{ME}_H$**

$$\overline{ME}_H = \frac{\Sigma\Delta_H}{n} \frac{(\text{.....})}{(\text{.....})}$$

77 $\overline{ME}_H$ = _____

**CONFIDENCE INTERVAL = $CI_H$**

$$CI_H = ((n \times \Sigma\Delta_H^2) - (\Sigma\Delta_H)^2)^{0.5} \times 0.2776$$

$$CI_H = ((____ \times ____) - (____)^2)^{0.5} \times 0.2776$$

80 $CI_H$ = _____

**CALIBRATION ERROR = $CE_H$**

$$CE_H = |\overline{ME}_H| + CI_H$$

$$CE_H = |____| + (____)$$

83 $CE_H$ = _____

$E(6)_H$ = (BLANK 52) (BLANK 74) =

86 $E(6)_H$ = _____

# APPENDIX I.

## United Sciences, Inc Model 500C Audit Data Forms

# AUDIT DATA SHEET
# THERMO ENVIRONMENTAL INSTRUMENTS MODEL 1000A
# (Continued)

[READ AND TRANSCRIBE FINAL CALIBRATION ERROR DATA.]

| EFFLUENT | LOW | EFFLUENT | MID | EFFLUENT | HIGH |
|---|---|---|---|---|---|
| _____ 16 | _____ 17 | _____ 18 | _____ 19 | _____ 20 | _____ 21 |
| _____ 22 | _____ 23 | _____ 24 | _____ 25 | _____ 26 | _____ 27 |
| _____ 28 | _____ 29 | _____ 30 | _____ 31 | _____ 32 | _____ 33 |
| _____ 34 | _____ 35 | _____ 36 | _____ 37 | _____ 38 | _____ 39 |
| _____ 40 | _____ 41 | _____ 42 | _____ 43 | _____ 44 | _____ 45 |
| _____ 46 | | [SIX-MINUTE AVERAGE DATA (IF APPLICABLE)] | | | |
| _____ 47 | _____ 48 | _____ 49 | _____ 50 | _____ 51 | _____ 52 |
| _____ 53 | | | | | |

**CORRECTION OF AUDIT FILTERS:**

54 Low: $\left[1 - \frac{\overline{2 \times (\text{BLANK } 4)} - (\text{BLANK } 13)}{100}\right]$ = _____

55 Mid: $\left[1 - \frac{\overline{2 \times (\text{BLANK } 4)} - (\text{BLANK } 14)}{100}\right]$ = _____

56 High: $\left[1 - \frac{\overline{2 \times (\text{BLANK } 4)} - (\text{BLANK } 15)}{100}\right]$ = _____

# AUDIT DATA SHEET
# UNITED SCIENCES, INC. MODEL 500C OPACITY MONITOR
# (Continued)

---

TRANSCEIVER DUST ACCUMULATION CHECK

17 Pre-cleaning effluent opacity (% Op) _____

[OPEN THE J-BOX. MOVE THE "RUN/TEST" SWITCH TO THE "TEST" POSITION. OPEN THE TRANSCEIVER. INSPECT AND CLEAN THE TRANSCEIVER OPTICS AND CALIBRATION WHEEL. ROTATE THE CALIBRATION WHEEL TO THE "MEASURE" POSITION (OPEN SEGMENT FACING UP). CLOSE THE TRANSCEIVER AND OBTAIN THE POST-CLEANING EFFLUENT OPACITY READING.]

18 Post-cleaning effluent opacity (% Op) _____

[GO TO RETROREFLECTOR LOCATION.]

RETROREFLECTOR DUST ACCUMULATION CHECK

[OBTAIN THE PRE-CLEANING EFFLUENT OPACITY READING.]

19 Pre-cleaning effluent opacity (% Op) _____

[OPEN THE RETROREFLECTOR. INSPECT AND CLEAN THE RETROREFLECTOR OPTICS. CLOSE THE RETROREFLECTOR AND OBTAIN THE POST-CLEANING EFFLUENT OPACITY READINGS.]

20 Post-cleaning effluent opacity (% Op) _____

---

OPTICAL ALIGNMENT CHECK

[OPEN THE RETROREFLECTOR. GO TO THE TRANSCEIVER LOCATION AND OBSERVE THE POSITION OF THE ALIGNMENT RETICLE RELATIVE TO THE CIRCULAR IMAGE OF THE OPEN RETROREFLECTOR PORT.]

21 Image centered?

| YES | NO |
|---|---|
| | |

[DRAW IMAGE.]

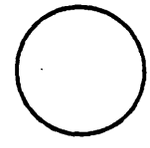

[RETURN TO THE RETROREFLECTOR LOCATION. CLOSE AND SECURE THE RETROREFLECTOR.]

[RETURN TO THE TRANSCEIVER LOCATION. RESET THE ZERO COMPENSATION BY PLACING THE "RUN/TEST" SWITCH IN THE "RUN" POSITION FOR 13 MINUTES. AFTER 13 MINUTES PLACE THE "RUN/TEST" SWITCH IN THE "TEST" POSITION.]

CALIBRATION ERROR TEST

[OPEN THE TRANSCEIVER AND INSTALL THE AUDIT JIG. IF THE AUDITOR IS SUPPLYING THE AUDIT JIG, ADJUST THE IRIS TO PRODUCE A ZERO VALUE OF 0-2% OPACITY ON THE DATA RECORDER.]

[RECORD AUDIT FILTER DATA.]

| | FILTER | SERIAL NO. | % OPACITY |
|---|---|---|---|
| 22 | LOW | | |
| 23 | MED | | |
| 24 | HIGH | | |

4408 9/91

# THERMO ENVIRONMENTAL INSTRUMENTS MODEL 1000A

SOURCE IDENTIFICATION: _____ CORPORATION: _____

PROCESS UNIT/STACK IDENTIFICATION: _____ PLANT/SITE: _____

AUDITOR: _____ REPRESENTING: _____

ATTENDEES: _____ REPRESENTING: _____

_____ REPRESENTING: _____

_____ REPRESENTING: _____

_____ REPRESENTING: _____

DATE: _____

## PRELIMINARY DATA

1 Stack exit inside diameter (FT) = $L_x$ _____

2 [Stack (or duct) inside diameter (or width) at the transmissometer location (FT)] x 2 = $L_t$ _____

3 Calculated "SEC" Factor = $L_x / L_t$ _____

4 Source-cited "SEC" Factor value _____

5 Source-cited zero automatic calibration value (% opacity) _____

6 Source-cited span automatic calibration value (% opacity) _____

[GO TO DATA RECORDER LOCATION.]

[INSPECT THE DATA RECORDING SYSTEM AND MARK WITH "OPACITY AUDIT," AUDITOR'S NAME, AFFILIATION, DATE, SOURCE, PROCESS UNIT/STACK IDENTIFICATION, AND THE TIME OF DAY.]

## ZERO CHECK

[IF THE SOURCE HAS INSTALLED A "CAL-INITIATE" BUTTON NEAR THE DATA RECORDER, PRESS THIS BUTTON TO INITIATE THE ZERO/SPAN CHECK AND RECORD THE VALUES BELOW. WHEN THE AUTOMATIC CALIBRATION CYCLE IS COMPLETE, GO TO THE TRANSMISSOMETER LOCATION.]

[IF THE SOURCE HAS NOT INSTALLED A "CAL-INITIATE" BUTTON, GO TO THE TRANSMISSOMETER LOCATION. TURN THE TRANSCEIVER "MODE SWITCH" TO THE "ZERO" POSITION, WAIT THREE MINUTES, AND OBTAIN A ZERO VALUE.]

7 Opacity data recorder zero calibration value (% Op) _____

## SPAN CHECK

[IF THERE IS NO "CAL-INITIATE" BUTTON, TURN THE TRANSCEIVER "MODE SWITCH" TO THE "SPAN" POSITION, WAIT THREE MINUTES, OBTAIN A SPAN VALUE, AND RETURN THE "MODE SWITCH" TO THE NORMAL OPERATING POSITION.]

8 Opacity data recorder span calibration value (% Op) _____

CALCULATION OF AUDIT RESULTS

STACK EXIT CORRELATION ERROR (%):

51 $\left[\frac{\text{(BLANK 4)} - \text{(BLANK 3)}}{\text{(BLANK 3)}}\right] \times 100 =$ _____

ZERO ERROR (% Op):

52 Panel Meter (BLANK 13) - (BLANK 5) = _____

53 Opacity Data Recorder (BLANK 7) - (BLANK 5) = _____

SPAN ERROR (% Op):

54 Panel Meter (BLANK 15) - (BLANK 6) = _____

55 Opacity Data Recorder (BLANK 8) - (BLANK 6) = _____

OPTICAL SURFACE DUST ACCUMULATION (% OP):

56 Transceiver (BLANK 17) - (BLANK 18) = _____

57 Retroreflector (BLANK 19) - (BLANK 20) = _____

58 Total (BLANK 56) + (BLANK 57) = _____

PATHLENGTH AND ZERO OFFSET CORRECTION OF AUDIT FILTERS:

59 Low: $\left[1 - \left[\left[1 - \frac{\text{(BLANK 22)}}{100}\right]^{\text{(BLANK 16)}} \times \left[1 - \frac{\text{(BLANK 45)}}{100}\right]\right]\right] \times 100 =$ _____

0 Mid: $\left[1 - \left[\left[1 - \frac{\text{(BLANK 23)}}{100}\right]^{\text{(BLANK 16)}} \times \left[1 - \frac{\text{(BLANK 45)}}{100}\right]\right]\right] \times 100 =$ _____

1 High: $\left[1 - \left[\left[1 - \frac{\text{(BLANK 24)}}{100}\right]^{\text{(BLANK 16)}} \times \left[1 - \frac{\text{(BLANK 45)}}{100}\right]\right]\right] \times 100 =$ _____

## PERFORMANCE AUDIT DATA SUMMARY

AUDITOR _____ DATE _____

SOURCE _____ UNIT _____

RESULTS CHECKED BY _____ DATE _____

| PARAMETER | | BLANK NO. | AUDIT RESULT | SPECIFICATION |
|---|---|---|---|---|
| FAULT LAMPS | | | | |
| CAL FAIL | | 7 | | OFF |
| DIRTY WINDOW | | 8 | | OFF |
| PURGE AIR | | 9 | | OFF |
| STACK POWER | | 10 | | OFF |
| LAMP FAILURE | | 11 | | OFF |
| ALARM | | 12 | | OFF |
| STACK EXIT CORRELATION ERROR | | 51 | | ± 2% |
| INTERNAL ZERO ERROR | PANEL METER | 52 | | ± 4% Op |
| | DATA RECORDER | 53 | | ± 4% Op |
| INTERNAL SPAN ERROR | PANEL METER | 54 | | ± 4% Op |
| | DATA RECORDER | 55 | | ± 4% Op |
| MONITOR ALIGNMENT ANALYSIS | | 21 | | CENTERED |
| OPTICAL SURFACE DUST ACCUMULATION | | | | |
| RETROREFLECTOR | | 56 | | ≤ 2% Op |
| TRANSCEIVER | | 57 | | ≤ 2% Op |
| TOTAL | | 58 | | ≤ 4% Op |
| CALIBRATION ERROR ANALYSIS | | | | |
| MEAN ERROR | | | | |
| LOW | | 62 | | |
| | | 71 [a] | | |
| MID | | 63 | | |
| | | 72 [a] | | |
| HIGH | | 64 | | |
| | | 73 [a] | | |
| CONFIDENCE INTERVAL | | | | |
| LOW | | 65 | | |
| MID | | 66 | | |
| HIGH | | 67 | | |
| CALIBRATION ERROR | | | | |
| LOW | | 68 | | ≤ 3% Op |
| MID | | 69 | | ≤ 3% Op |
| HIGH | | 70 | | ≤ 3% Op |

[a] ERROR BASED ON SIX-MINUTE AVERAGED DATA, FROM A SINGLE FILTER INSERTION.

## UNITED SCIENCES, INC. MODEL 500C
## OPACITY MONITOR PERFORMANCE AUDIT DATA SUMMARY

AUDITOR _____ DATE _____

SOURCE _____ UNIT _____

RESULTS CHECKED BY _____ DATE _____

| PARAMETER | | BLANK NO. | AUDIT RESULT | SPECIFICATION |
|---|---|---|---|---|
| FAULT LAMPS | | | | |
| INST MALF | | 9 | | OFF |
| CAL FAIL | | 10 | | OFF |
| PURGE FAIL | | 11 | | OFF |
| STACK PWR FAIL | | 12 | | OFF |
| STACK EXIT CORRELATION ERROR | | 51 | | ± 2% |
| INTERNAL ZERO ERROR | PANEL METER | 52 | | ± 4% Op |
| | DATA RECORDER | 53 | | ± 4% Op |
| DIRT COMPENSATION | | 14 | | ± 4% Op |
| INTERNAL SPAN ERROR | PANEL METER | 54 | | ± 4% Op |
| | DATA RECORDER | 55 | | ± 4% Op |
| MONITOR ALIGNMENT ANALYSIS | | 21 | | CENTERED |
| OPTICAL SURFACE DUST ACCUMULATION | | | | |
| TRANSCEIVER | | 56 | | ≤ 2% Op |
| RETROREFLECTOR | | 57 | | ≤ 2% Op |
| TOTAL | | 58 | | ≤ 4% Op |
| CALIBRATION ERROR ANALYSIS | | | | |
| MEAN ERROR | | | | |
| LOW | | 62 | | |
| | | 71[a] | | |
| MID | | 63 | | |
| | | 72[a] | | |
| HIGH | | 64 | | |
| | | 73[a] | | |
| CONFIDENCE INTERVAL | | | | |
| LOW | | 65 | | |
| MID | | 66 | | |
| HIGH | | 67 | | |
| CALIBRATION ERROR | | | | |
| LOW | | 68 | | ≤ 3% Op |
| MID | | 69 | | ≤ 3% Op |
| HIGH | | 70 | | ≤ 3% Op |

[a] ERROR BASED ON SIX-MINUTE AVERAGED DATA, FROM A SINGLE FILTER INSERTION.

4408 9/91

## CALCULATION OF AUDIT RESULTS

**STACK EXIT CORRELATION ERROR (%):**

51 $$\left[\frac{(\text{BLANK 4}) - (\text{BLANK 3})}{(\text{BLANK 3})}\right] \times 100 = _____$$

**ZERO ERROR (% Op):**

52 Panel Meter $(\text{BLANK 13}) - (\text{BLANK 5}) =$ _____

53 Opacity Data Recorder $(\text{BLANK 14}) - (\text{BLANK 5}) =$ _____

**SPAN ERROR (% Op):**

54 Panel Meter $(\text{BLANK 15}) - (\text{BLANK 6}) =$ _____

55 Opacity Data Recorder $(\text{BLANK 16}) - (\text{BLANK 6}) =$ _____

**OPTICAL SURFACE DUST ACCUMULATION (% OP):**

56 Retroreflector $(\text{BLANK 17}) - (\text{BLANK 18}) =$ _____

57 Transceiver $(\text{BLANK 19}) - (\text{BLANK 20}) =$ _____

58 Total $(\text{BLANK 56}) + (\text{BLANK 57}) =$ _____

**PATHLENGTH AND ZERO OFFSET CORRECTION OF AUDIT FILTERS:**

59 Low: $$\left[1 - \left[\left[1 - \frac{(\text{BLANK 22})}{100}\right]^{(\text{BLANK 4})} \times \left[1 - \frac{(\text{BLANK 45})}{100}\right]\right]\right] \times 100 = _____$$

60 Mid: $$\left[1 - \left[\left[1 - \frac{(\text{BLANK 23})}{100}\right]^{(\text{BLANK 4})} \times \left[1 - \frac{(\text{BLANK 45})}{100}\right]\right]\right] \times 100 = _____$$

61 High: $$\left[1 - \left[\left[1 - \frac{(\text{BLANK 24})}{100}\right]^{(\text{BLANK 4})} \times \left[1 - \frac{(\text{BLANK 45})}{100}\right]\right]\right] \times 100 = _____$$

# AUDIT DATA SHEET
# LAND COMBUSTION MODEL 4500 OPACITY MONITOR

SOURCE IDENTIFICATION: _____ CORPORATION: _____

PROCESS UNIT/STACK IDENTIFICATION: _____ PLANT/SITE: _____

AUDITOR: _____ REPRESENTING: _____

ATTENDEES: _____ REPRESENTING: _____

_____ REPRESENTING: _____

_____ REPRESENTING: _____

_____ REPRESENTING: _____

DATE: _____

## PRELIMINARY DATA

1 Stack exit inside diameter (FT) = $L_x$ _____

2 [Stack (or duct) inside diameter (or width) at the transmissometer location (FT)] x 2 = $L_t$ _____

3 Calculated OPLR = $L_x / L_t$ _____

4 Source-cited OPLR value _____

5 Source-cited zero automatic calibration value (% opacity) _____

6 Source-cited span automatic calibration value (% opacity) _____

[If unavailable, input the factory assigned span value.]

[GO TO DATA RECORDER LOCATION.]

[INSPECT THE DATA RECORDING SYSTEM AND MARK THE DATA RECORDER WITH "OPACITY AUDIT," AUDITOR'S NAME, AFFILIATION, DATE, SOURCE, PROCESS UNIT/STACK IDENTIFICATION, AND THE TIME OF DAY.]

[GO TO CONTROL UNIT LOCATION.]

## FAULT LAMP CHECK

| ON | OFF |
|---|---|
| | |

7 FAULT [One or more monitor faults detected.]

[ENTER ADDITIONAL FAULT INFORMATION BELOW. (Optional)]

_____

_____

_____

_____

## ZERO AND SPAN CHECK

[PRESS THE "CALIBRATE" KEY. ENTER THE NUMBER 10 AS THE ENTRY CODE USING THE "YES" (▲) KEY AND PRESS THE "ENTER" KEY. ACKNOWLEDGE THE QUESTION "CALIBRATE?" BY PRESSING THE "YES" (▲) KEY TO INITIATE THE ZERO AND SPAN CALIBRATION CYCLE.]

8 Panel meter span calibration value (% Op) _____

9 Data recorder span calibration value (% Op) _____

[AFTER 1.5 MINUTES IN THE SPAN MODE, THE CEMS WILL AUTOMATICALLY ENTER THE ZERO MODE.]

10 Panel meter zero calibration value (% Op) _____

11 Data recorder zero calibration value (% Op) _____

[AFTER 1.5 MINUTES IN THE ZERO MODE, THE CEMS WILL AUTOMATICALLY RETURN TO THE MEASUREMENT MODE.]

4408 9/91

# AUDIT DATA SHEET
# THERMO ENVIRONMENTAL INSTRUMENTS MODEL 400 TRANSMISSOMETER AND MODEL 500 CONTROL UNIT
# (Continued)

---

**RETROREFLECTOR DUST ACCUMULATION CHECK**

17 Pre-cleaning effluent opacity (% Op) _____

[Open the retroreflector, inspect and clean the retroreflector optical surface, and close the retroreflector.]

18 Post-cleaning effluent opacity (% Op) _____

[GO TO TRANSCEIVER LOCATION.]

**TRANSCEIVER DUST ACCUMULATION CHECK**

19 Pre-cleaning effluent opacity (% Op) _____

[TURN OFF CHOPPER MOTOR SWITCH ON TRANSCEIVER CONTROL PANEL.]
[Open the transceiver, clean the primary lens, close the transceiver, and turn the chopper motor switch on.] _____

20 Post-cleaning effluent opacity (% Op)

---

**OPTICAL ALIGNMENT CHECK**

[LOOK INTO THE VIEWING PORT ON THE BACK OF THE TRANSCEIVER AND OBSERVE THE POSITION OF THE BEAM IMAGE WITH RESPECT TO THE TARGET CROSS HAIRS.]

21 Image centered?

| YES | NO |
|---|---|
| | |

[DRAW LOCATION OF BEAM IMAGE.]

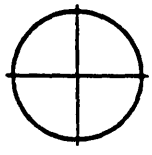

**CALIBRATION ERROR CHECK**

[TURN OFF THE CHOPPER MOTOR SWITCH AND OPEN THE TRANSCEIVER.]

[NOTE: MOST SOURCES HAVE A CALIBRATION DEVICE SUPPLIED BY THE MONITOR MANUFACTURER THAT IS ADJUSTED FOR THE MONITORS OPTICAL PATHLENGTH. IF THIS DEVICE IS NOT AVAILABLE, THE AUDITOR MUST SUPPLY A SIMILAR DEVICE THAT CAN BE ADJUSTED TO COMPENSATE FOR THE MONITORS OPTICAL PATHLENGTH SETTING.]

[INSTALL THE AUDIT JIG ON THE TRANSCEIVER FACE IN FRONT OF THE PROJECTION LENS.]

[RESTART THE CHOPPER MOTOR.]

[RECORD AUDIT FILTER DATA.]

| FILTER | SERIAL NO. | % OPACITY |
|---|---|---|
| 22 LOW | | |
| 23 MED | | |
| 24 HIGH | | |

# AUDIT DATA SHEET
# LAND COMBUSTION MODEL 4500 OPACITY MONITOR
# (Continued)

## TRANSCEIVER DUST ACCUMULATION CHECK

19 Pre-cleaning effluent opacity (% Op) _____

[Open the transceiver. Inspect and clean the primary lens and zero mirror, and close the transceiver.]

20 Post-cleaning effluent opacity (% Op) _____

[RESET THE ZERO COMPENSATION VALUE BY HAVING AN ASSISTANT AT THE CONTROL UNIT LOCATION INITIATE A MANUAL ZERO AND SPAN CALIBRATION CYCLE. THE COMPLETE CYCLE WILL TAKE APPROXIMATELY 3.5 MINUTES.]

## OPTICAL ALIGNMENT CHECK

[TURN THE FUNCTION SWITCH CLOCKWISE TO THE "VISIER" POSITION.]

[LOOK INTO THE VIEWING PORT ON THE RIGHT HAND SIDE OF THE TRANSCEIVER, AND OBSERVE THE POSITION OF THE BEAM IMAGE WITH RESPECT TO THE BLACK CIRCLE.]

21 Image Centered?

| YES | NO |
|---|---|
| | |

[DRAW LOCATION OF THE BEAM IMAGE.]

[TURN THE TRANSCEIVER MODE SWITCH CLOCKWISE UNTIL "MEASURE" APPEARS IN THE WINDOW. REPLACE THE MODE SWITCH PROTECTIVE COVER.]

## DEFEAT ZERO COMPENSATION (Optional)

[REMOVE LAMP ACCESS COVER, MOVE AUTO COMP SWITCH TO THE "UP" POSITION AND REPLACE THE LAMP ACCESS COVER.]

22 Zero compensation function defeated?

| YES | NO |
|---|---|
| | |

## CALIBRATION ERROR CHECK

[OPEN THE TRANSCEIVER AND THE J-BOX.]

[READ SPAN FILTER OPTICAL DENSITY VALUE FROM THE FRONT SIDE OF THE TRANSCEIVER.]

23 Span filter value (O.D.) _____

[INSTALL THE AUDIT JIG ON THE TRANSCEIVER PROJECTION LENS AND ADJUST THE JIG ZERO UNTIL THE J-BOX METER READS APPROXIMATELY 2 mA, AND A VALUE BETWEEN 0% AND 2% OPACITY IS READ ON THE OPACITY DATA RECORDER.]

[RECORD AUDIT FILTER DATA.]

| | FILTER | SERIAL NO. | % OPACITY |
|---|---|---|---|
| 24 | LOW | | |
| 25 | MED | | |
| 26 | HIGH | | |

4408 9/91

# APPENDIX E.

## Thermo Environmental Instruments
## Model 400 Audit Data Forms

# AUDIT DATA SHEET
# LAND COMBUSTION MODEL 4500 OPACITY MONITOR
# (Continued)

[READ AND TRANSCRIBE FINAL CALIBRATION ERROR DATA.]

| ZERO | LOW | MID | HIGH | ZERO |
|---|---|---|---|---|
| 28 _____ | 29 _____ | 30 _____ | 31 _____ | 32 _____ |
| | 33 _____ | 34 _____ | 35 _____ | 36 _____ |
| | 37 _____ | 38 _____ | 39 _____ | 40 _____ |
| | 41 _____ | 42 _____ | 43 _____ | 44 _____ |
| | 45 _____ | 46 _____ | 47 _____ | 48 _____ |

[SIX-MINUTE AVERAGE DATA, IF AVAILABLE.]

| | | | | |
|---|---|---|---|---|
| 49 _____ | 50 _____ | 51 _____ | 52 _____ | 53 _____ |

CALCULATION OF AUDIT RESULTS

STACK EXIT CORRELATION ERROR (%):

54 Source cited $\left[\dfrac{\text{(BLANK 4)} - \text{(BLANK 3)}}{\text{(BLANK 3)}}\right] \times 100 =$ _____

55 Measured $\left[\dfrac{\text{(BLANK 13)} - \text{(BLANK 3)}}{\text{(BLANK 3)}}\right] \times 100 =$ _____

ZERO ERROR (% Op):

56 Panel meter (BLANK 10) - (BLANK 5) = _____

57 Opacity data recorder (BLANK 11) - (BLANK 5) = _____

SPAN ERROR (% Op):

58 Panel Meter (BLANK 8) - (BLANK 6) = _____

59 Opacity Data Recorder (BLANK 9) - (BLANK 6) = _____

4408 9/91

# CALIBRATION ERROR CALCULATIONS (INCREMENTAL PROCEDURE)

| LOW-RANGE DIFFERENCE | | | $\Delta_L$ | $\Delta_L^2$ | ITEM NO. |
|---|---|---|---|---|---|
| _____ (BLANK I-25) | – _____ (BLANK I-65) | = | _____ | _____ | |
| _____ (BLANK I-31) | – _____ (BLANK I-68) | = | _____ | _____ | |
| _____ (BLANK I-37) | – _____ (BLANK I-71) | = | _____ | _____ | |
| _____ (BLANK I-43) | – _____ (BLANK I-74) | = | _____ | _____ | |
| _____ (BLANK I-49) | – _____ (BLANK I-77) | = | _____ | _____ | |
| | | $\Sigma\Delta_L$ = | _____ | $\Sigma\Delta_L^2$ = _____ | |

| MID-RANGE DIFFERENCE | | | $\Delta_M$ | $\Delta_M^2$ | ITEM NO. |
|---|---|---|---|---|---|
| _____ (BLANK I-27) | – _____ (BLANK I-66) | = | _____ | _____ | |
| _____ (BLANK I-33) | – _____ (BLANK I-69) | = | _____ | _____ | |
| _____ (BLANK I-39) | – _____ (BLANK I-72) | = | _____ | _____ | |
| _____ (BLANK I-45) | – _____ (BLANK I-75) | = | _____ | _____ | |
| _____ (BLANK I-51) | – _____ (BLANK I-78) | = | _____ | _____ | |
| | | $\Sigma\Delta_M$ = | _____ | $\Sigma\Delta_M^2$ = _____ | |

| HIGH RANGE DIFFERENCE | | | $\Delta_H$ | $\Delta_H^2$ |
|---|---|---|---|---|
| _____ (BLANK I-29) | – _____ (BLANK I-67) | = | _____ | _____ |
| _____ (BLANK I-35) | – _____ (BLANK I-70) | = | _____ | _____ |
| _____ (BLANK I-41) | – _____ (BLANK I-73) | = | _____ | _____ |
| _____ (BLANK I-47) | – _____ (BLANK I-76) | = | _____ | _____ |
| _____ (BLANK I-53) | – _____ (BLANK I-79) | = | _____ | _____ |
| | | $\Sigma\Delta_H$ = | _____ | $\Sigma\Delta_H^2$ = _____ |

**MEAN ERROR = $\overline{ME}_L$**

$$\overline{ME}_L = \frac{\Sigma\Delta_L}{n} \frac{(\text{.....})}{(\text{.....})}$$

3 $\overline{ME}_L$ = _____

**CONFIDENCE INTERVAL = $CI_L$**

$$CI_L = ((n \times \Sigma\Delta_L^2) - (\Sigma\Delta_L)^2)^{0.5} \times 0.2776$$

$$CI_L = ((____ \times ____) - (____)^2)^{0.5} \times 0.2776$$

6 $CI_L$ = _____

**CALIBRATION ERROR = $CE_L$**

$$CE_L = |\overline{ME}_L| + CI_L$$

$$CE_L = |____| + (____)$$

9 $CE_L$ = _____

$E(6)_L$ = _____ (BLANK I-56) – _____ (BLANK I-80) =

2 $E(6)_L$ = _____

**MEAN ERROR = $\overline{ME}_M$**

$$\overline{ME}_M = \frac{\Sigma\Delta_M}{n} \frac{(\text{.....})}{(\text{.....})}$$

I-84 $\overline{ME}_M$ = _____

**CONFIDENCE INTERVAL = $CI_M$**

$$CI_M = ((n \times \Sigma\Delta_M^2) - (\Sigma\Delta_M)^2)^{0.5} \times 0.2776$$

$$CI_M = ((____ \times ____) - (____)^2)^{0.5} \times 0.2776$$

I-87 $CI_M$ = _____

**CALIBRATION ERROR = $CE_M$**

$$CE_M = |\overline{ME}_M| + CI_M$$

$$CE_M = |____| + (____)$$

I-90 $CE_M$ = _____

**SIX-MINUTE AVERAGED ERROR**

$E(6)_M$ = _____ (BLANK I-58) – _____ (BLANK I-81) =

I-93 $E(6)_M$ = _____

**MEAN ERROR = $\overline{ME}_H$**

$$\overline{ME}_H = \frac{\Sigma\Delta_H}{n} \frac{(\text{.....})}{(\text{.....})}$$

I-85 $\overline{ME}_H$ = _____

**CONFIDENCE INTERVAL = $CI_H$**

$$CI_H = ((n \times \Sigma\Delta_H^2) - (\Sigma\Delta_H)^2)^{0.5} \times 0.2776$$

$$CI_H = ((____ \times ____) - (____)^2)^{0.5} \times 0.2776$$

I-88 $CI_H$ = _____

**CALIBRATION ERROR = $CE_H$**

$$CE_H = |\overline{ME}_H| + CI_H$$

$$CE_H = |____| + (____)$$

I-91 $CE_H$ = _____

$E(6)_H$ = _____ (BLANK I-60) – _____ (BLANK I-82) =

I-94 $E(6)_H$ = _____

## CALIBRATION ERROR CALCULATION

| LOW-RANGE DIFFERENCE | | | $\Delta_L$ | $\Delta_L^2$ | ITEM NO. | MID-RANGE DIFFERENCE | | | $\Delta_M$ | $\Delta_M^2$ | ITEM NO. | HIGH RANGE DIFFERENCE | | | $\Delta_H$ | $\Delta_H^2$ |
|---|---|---|---|---|---|---|---|---|---|---|---|---|---|---|---|---|
| (BLANK 29) | − | (BLANK 64) | = | | | (BLANK 30) | − | (BLANK 65) | = | | | (BLANK 31) | − | (BLANK 66) | = | |
| (BLANK 33) | − | (BLANK 64) | = | | | (BLANK 34) | − | (BLANK 65) | = | | | (BLANK 35) | − | (BLANK 66) | = | |
| (BLANK 37) | − | (BLANK 64) | = | | | (BLANK 38) | − | (BLANK 65) | = | | | (BLANK 39) | − | (BLANK 66) | = | |
| (BLANK 41) | − | (BLANK 64) | = | | | (BLANK 42) | − | (BLANK 65) | = | | | (BLANK 43) | − | (BLANK 66) | = | |
| (BLANK 45) | − | (BLANK 64) | = | | | (BLANK 46) | − | (BLANK 65) | = | | | (BLANK 47) | − | (BLANK 66) | = | |
| | | $\Sigma\Delta_L$ | = | $\Sigma\Delta_L^2$ = | | | | $\Sigma\Delta_M$ | = | $\Sigma\Delta_M^2$ = | | | | $\Sigma\Delta_H$ | = | $\Sigma\Delta_H^2$ = |

**LOW-RANGE MEAN ERROR = $\overline{ME}_L$**

$$\overline{ME}_L = \frac{\Sigma\Delta_L}{n} = \frac{(_____)}{(_____)}$$

$\overline{ME}_L$ = _____

**MID-RANGE MEAN ERROR = $\overline{ME}_M$**

$$\overline{ME}_M = \frac{\Sigma\Delta_M}{n} = \frac{(_____)}{(_____)}$$

68 $\overline{ME}_M$ = _____

**HIGH RANGE MEAN ERROR = $\overline{ME}_H$**

$$\overline{ME}_H = \frac{\Sigma\Delta_H}{n} = \frac{(_____)}{(_____)}$$

69 $\overline{ME}_H$ = _____

**LOW-RANGE CONFIDENCE INTERVAL = $CI_L$**

$$CI_L = ((n \times \Sigma\Delta_L^2) - (\Sigma\Delta_L)^2)^{0.5} \times 0.2776$$

$$CI_L = ((____ \times ____) - (____)^2)^{0.5} \times 0.2776$$

$CI_L$ = _____

**MID-RANGE CONFIDENCE INTERVAL = $CI_M$**

$$CI_M = ((n \times \Sigma\Delta_M^2) - (\Sigma\Delta_M)^2)^{0.5} \times 0.2776$$

$$CI_M = ((____ \times ____) - (____)^2)^{0.5} \times 0.2776$$

71 $CI_M$ = _____

**HIGH-RANGE CONFIDENCE INTERVAL = $CI_H$**

$$CI_H = ((n \times \Sigma\Delta_H^2) - (\Sigma\Delta_H)^2)^{0.5} \times 0.2776$$

$$CI_H = ((____ \times ____) - (____)^2)^{0.5} \times 0.2776$$

72 $CI_H$ = _____

**LOW-RANGE CALIBRATION ERROR = $CE_L$**

$CE_L = |\overline{ME}_L| + CI_L$

$CE_L$ = |_____| + (_____)

$CE_L$ = _____

**MID-RANGE CALIBRATION ERROR = $CE_M$**

$CE_M = |\overline{ME}_M| + CI_M$

$CE_M$ = |_____| + (_____)

74 $CE_M$ = _____

**HIGH-RANGE CALIBRATION ERROR = $CE_H$**

$CE_H = |\overline{ME}_H| + CI_H$

$CE_H$ = |_____| + (_____)

75 $CE_H$ = _____

**SIX-MINUTE AVERAGED ERROR**

$E(6)_L$ = _____ (BLANK 50) − _____ (BLANK 64) =

$E(6)_L$ = _____

$E(6)_M$ = _____ (BLANK 51) − _____ (BLANK 65) =

77 $E(6)_M$ = _____

$E(6)_H$ = _____ (BLANK 52) − _____ (BLANK 66) =

78 $E(6)_H$ = _____

# AUDIT DATA SHEET
# DYNATRON MODEL 1100 OPACITY MONITOR
# (Continued)
# INCREMENTAL CAL ERROR

CONTROL UNIT ADJUSTMENT RESET

[IF NECESSARY, RESET THE CONTROL UNIT CALIBRATION TIMER AND METER DISPLAY KNOBS TO THE POSITIONS INDICATED IN THE CORRESPONDING BLANKS.]

| KNOB | BLANK NO. |
|---|---|
| Automatic Calibration Timer | 10 |
| Meter Display | 11 |

[OBTAIN A COPY OF THE AUDIT DATA FROM THE OPACITY DATA RECORDER, AND ENSURE THAT THE DATA CAN BE CLEARLY READ AND INTERPRETED.]

[READ AND TRANSCRIBE FINAL CALIBRATION ERROR DATA.]

| EFFLUENT | LOW | EFFLUENT | MID | EFFLUENT | HIGH |
|---|---|---|---|---|---|
| _____ I-24 | _____ I-25 | _____ I-26 | _____ I-27 | _____ I-28 | _____ I-29 |
| _____ I-30 | _____ I-31 | _____ I-32 | _____ I-33 | _____ I-34 | _____ I-35 |
| _____ I-36 | _____ I-37 | _____ I-38 | _____ I-39 | _____ I-40 | _____ I-41 |
| _____ I-42 | _____ I-43 | _____ I-44 | _____ I-45 | _____ I-46 | _____ I-47 |
| _____ I-48 | _____ I-49 | _____ I-50 | _____ I-51 | _____ I-52 | _____ I-53 |
| _____ I-54 | | [SIX-MINUTE AVERAGE DATA (IF APPLICABLE)] | | | |
| _____ I-55 | _____ I-56 | _____ I-57 | _____ I-58 | _____ I-59 | _____ I-60 |
| _____ I-61 | | | | | |

"M" FACTOR CORRECTION OF AUDIT FILTER (TRANSMITTANCE):

I-62 Low: $\left[1 - \frac{2 \times (\text{BLANK 4})}{(\text{BLANK I-21})} \cdot 100\right]$ = _____

I-63 Mid: $\left[1 - \frac{2 \times (\text{BLANK 4})}{(\text{BLANK I-22})} \cdot 100\right]$ = _____

I-64 High: $\left[1 - \frac{2 \times (\text{BLANK 4})}{(\text{BLANK I-23})} \cdot 100\right]$ = _____

# APPENDIX K.

## Datatest Models 900A and 900RM Audit Data Forms

**DYNATRON MODEL 1100 OPACITY MONITOR**
**PERFORMANCE AUDIT DATA SUMMARY**
**(JIG PROCEDURE)**

AUDITOR _____ DATE _____

SOURCE _____ UNIT _____

RESULTS CHECKED BY _____ DATE _____

| PARAMETER | | BLANK NO. | AUDIT RESULT | SPECIFICATION |
|---|---|---|---|---|
| FAULT LAMPS | | | | |
| LAMP | | 7 | | OFF |
| WINDOW | | 8 | | OFF |
| AIR FLOW | | 9 | | OFF |
| STACK EXIT CORRELATION ERROR | | 51 | | ± 2% |
| INTERNAL ZERO ERROR | PANEL METER | 52 | | ± 4%Op |
| | DATA RECORDER | 53 | | ± 4%Op |
| INTERNAL SPAN ERROR | PANEL METER | 54 | | ± 4%Op |
| | DATA RECORDER | 55 | | ± 4%Op |
| MONITOR ALIGNMENT ANALYSIS | | 20 | | CENTERED |
| OPTICAL SURFACE DUST ACCUMULATION | | | | |
| RETROREFLECTOR | | 56 | | ≤ 2% Op |
| TRANSCEIVER | | 57 | | ≤ 2% Op |
| TOTAL | | 58 | | ≤ 4% Op |
| CALIBRATION ERROR ANALYSIS | | | | |
| MEAN ERROR | | | | |
| LOW | | 62 | | |
| | | 71 [a] | | |
| MID | | 63 | | |
| | | 72 [a] | | |
| HIGH | | 64 | | |
| | | 73 [a] | | |
| CONFIDENCE INTERVAL | | | | |
| LOW | | 65 | | |
| MID | | 66 | | |
| HIGH | | 67 | | |
| CALIBRATION ERROR | | | | |
| LOW | | 68 | | ≤ 3% Op |
| MID | | 69 | | ≤ 3% Op |
| HIGH | | 70 | | ≤ 3% Op |

[a] ERROR BASED ON SIX-MINUTE AVERAGED DATA, FROM A SINGLE FILTER INSERTION.

---

**LENS DUSTING CHECK (INITIAL)**

[MEASURE THE VOLTAGE AT TEST POINT 3 ON PC-5 IN MILLIVOLTS.]

[DIVIDE THIS VALUE BY 100 TO CALCULATE THE LENS DUSTING IN PERCENT OPACITY.]

15 Initial lens dusting value (% Op) = _____ (MV) / 100 = _____

**SPAN CHECK**

[TURN OFF THE "ZERO CALIBRATION" SWITCH AND TURN ON THE "SPAN CALIBRATION" SWITCH.]

[READ THE SPAN CALIBRATION VALUE FROM THE PANEL METER AND THE DATA RECORDER.]

16 Panel meter span calibration value (% Op) _____

17 Opacity data recorder span calibration value (% Op) _____

[TURN OFF THE "SPAN CALIBRATION" SWITCH.]

[GO TO TRANSMISSOMETER LOCATION.]

**RETROREFLECTOR (OR RECEIVER) DUST ACCUMULATION CHECK**

18 Pre-cleaning effluent opacity (% Op) _____

[OPEN THE RETROREFLECTOR. INSPECT AND CLEAN THE RETROREFLECTOR OPTICAL SURFACE, AND CLOSE THE RETROREFLECTOR. IF AUDITING THE MODEL 900A, INSPECT AND CLEAN THE DETECTOR OPTICS AND THE FIBER OPTICS DUST MONITOR.]

19 Post-cleaning effluent opacity (% Op) _____

[GO TO TRANSCEIVER LOCATION.]

**TRANSCEIVER (OR TRANSMITTER) DUST ACCUMULATION CHECK**

20 Pre-cleaning effluent opacity (% Op) _____

[OPEN THE TRANSCEIVER. INSPECT AND CLEAN THE PRIMARY LENS AND THE FIBER OPTICS DUST MONITOR.]

21 Post-cleaning effluent opacity (% Op) _____

**OPTICAL ALIGNMENT CHECK**

[FOR THE MODEL 900RM, REMOVE THE SILICON CELL DETECTOR AND INSTALL THE BULL'S EYE IN ITS PLACE. NOTE THE POSITION OF LIGHT BEAM IMAGE WITH RESPECT TO CROSS-HAIRS. REMOVE THE BULL'S EYE AND REINSTALL THE DETECTOR.]

[FOR THE MODEL 900A, LOOK THROUGH THE ALIGNMENT PORT AT BACK OF DETECTOR HOUSING AND NOTE POSITION OF LIGHT BEAM IMAGE WITH RESPECT TO CROSS-HAIRS.]

22 Image centered?

| YES | NO |
|---|---|
| | |

[DRAW LOCATION OF BEAM IMAGE.]

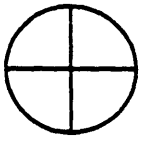

## CALCULATION OF AUDIT RESULTS

**STACK EXIT CORRELATION ERROR (%):**

51 $$\left[\frac{(\text{BLANK 4}) - (\text{BLANK 3})}{(\text{BLANK 3})}\right] \times 100 = _____$$

**ZERO ERROR (% Op):**

52 Panel meter $(\text{BLANK 12}) - (\text{BLANK 5}) =$ _____

53 Opacity data recorder $(\text{BLANK 13}) - (\text{BLANK 5}) =$ _____

**SPAN ERROR (% Op):**

54 Panel Meter $(\text{BLANK 14}) - (\text{BLANK 6}) =$ _____

55 Opacity Data Recorder $(\text{BLANK 15}) - (\text{BLANK 6}) =$ _____

**OPTICAL SURFACE DUST ACCUMULATION (% Op):**

56 Retroreflector $(\text{BLANK 16}) - (\text{BLANK 17}) =$ _____

57 Transceiver $(\text{BLANK 18}) - (\text{BLANK 19}) =$ _____

58 Total $(\text{BLANK 56}) + (\text{BLANK 57}) =$ _____

**"M" FACTOR AND ZERO OFFSET CORRECTION OF AUDIT FILTERS:**

59 Low: $$\left[1 - \left[\left[1 - \frac{(\text{BLANK 22})}{100}\right]^{2 \times (\text{BLANK 4})} \times \left[1 - \frac{(\text{BLANK 45})}{100}\right]\right]\right] \times 100 = _____$$

60 Mid: $$\left[1 - \left[\left[1 - \frac{(\text{BLANK 23})}{100}\right]^{2 \times (\text{BLANK 4})} \times \left[1 - \frac{(\text{BLANK 45})}{100}\right]\right]\right] \times 100 = _____$$

61 High: $$\left[1 - \left[\left[1 - \frac{(\text{BLANK 24})}{100}\right]^{2 \times (\text{BLANK 4})} \times \left[1 - \frac{(\text{BLANK 45})}{100}\right]\right]\right] \times 100 = _____$$

**FINAL CALIBRATION ERROR DATA - MODEL 900RM**

[READ AND TRANSCRIBE FINAL CALIBRATION ERROR DATA.]

| ZERO | LOW | MID | HIGH | ZERO |
|---|---|---|---|---|
| 27 _____ | 28 _____ | 29 _____ | 30 _____ | 31 _____ |
| | 32 _____ | 33 _____ | 34 _____ | 35 _____ |
| | 36 _____ | 37 _____ | 38 _____ | 39 _____ |
| | 40 _____ | 41 _____ | 42 _____ | 43 _____ |
| | 44 _____ | 45 _____ | 46 _____ | 47 _____ |

[SIX-MINUTE AVERAGE DATA, IF APPLICABLE.]

| | | | | |
|---|---|---|---|---|
| 48 _____ | 49 _____ | 50 _____ | 51 _____ | 52 _____ |

**CALCULATION OF AUDIT RESULTS - MODELS 900RM AND 900A**

**STACK EXIT CORRELATION ERROR (%):**

3 Source cited $\left[\dfrac{\text{(BLANK 4)} - \text{(BLANK 3)}}{\text{(BLANK 3)}}\right] \times 100 =$ _____

4 Measured $\left[\dfrac{\text{(BLANK 12)} - \text{(BLANK 3)}}{\text{(BLANK 3)}}\right] \times 100 =$ _____

**RO ERROR (% Op):**

Panel meter (BLANK 13) − (BLANK 5) = _____

Opacity data recorder (BLANK 14) − (BLANK 5) = _____

**AN ERROR (% Op):**

Panel Meter (BLANK 16) − (BLANK 6) = _____

Opacity Data Recorder (BLANK 17) − (BLANK 6) = _____

# AUDIT DATA SHEET
# DYNATRON MODEL 1100 OPACITY MONITOR
# (Continued)

---

**SPAN CHECK**

14 Panel meter span calibration value (% Op) _____

15 Opacity data recorder span calibration value (% Op) _____

[GO TO TRANSMISSOMETER LOCATION.]

**RETROREFLECTOR DUST ACCUMULATION CHECK**

16 Pre-cleaning effluent opacity (% Op) _____

[Remove, inspect, clean, and replace the protective window.]

17 Post-cleaning effluent opacity (% Op) _____

[Go to transceiver location.]

**TRANSCEIVER DUST ACCUMULATION CHECK**

18 Pre-cleaning effluent opacity (% Op) _____

[Remove, inspect, clean, and replace the protective window.]

19 Post-cleaning effluent opacity (% Op) _____

**OPTICAL ALIGNMENT CHECK (OPTIONAL)**

[IF AN ALIGNMENT TUBE IS PRESENT ON THE TRANSCEIVER SIDE OF STACK OR DUCT, LOOK THROUGH THE TUBE AND OBSERVE WHETHER THE BEAM IS CENTERED AROUND THE RETROREFLECTOR PORT.]

20 Image Centered?

| YES | NO |
|---|---|
| | |

[DRAW ORIENTATION OF THE RETROREFLECTOR PORT IN ALIGNMENT CIRCLE.]

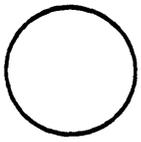

**CALIBRATION ERROR CHECK [JIG PROCEDURE]**

[REMOVE THE DIRTY WINDOW DETECTOR PHOTOCELL. IF THE TRANSCEIVER DOES NOT HAVE A DIRTY WINDOW PHOTOCELL OR A REMOVABLE ACCESS PANEL COVER AT THAT POSITION, THE INCREMENTAL CALIBRATION ERROR PROCEDURE MUST BE USED.]

[REMOVE THE TRANSCEIVER PROTECTIVE WINDOW.]

[INSTALL THE AUDIT JIG IN THE DIRTY WINDOW DETECTOR PORT AND ADJUST THE JIG ZERO UNTIL A VALUE BETWEEN 1% AND 2% OPACITY IS READ ON THE OPACITY DATA RECORDER.]

[INSTALL THE TRANSCEIVER PROTECTIVE WINDOW AND RECORD THE PROTECTIVE WINDOW OPACITY.]

21 Window opacity (including jig zero offset) _____

[REMOVE THE TRANSCEIVER PROTECTIVE WINDOW.]
[RECORD AUDIT FILTER DATA.]

| FILTER | SERIAL NO. | % OPACITY |
|---|---|---|
| 22 LOW | | |
| 23 MED | | |
| 24 HIGH | | |

4408 9/91

| LOW-RANGE DIFFERENCE | | | $\Delta_L$ | $\Delta_L^2$ |
|---|---|---|---|---|
| (BLANK 28) | (BLANK 64) | = | | |
| (BLANK 32) | (BLANK 64) | = | | |
| (BLANK 36) | (BLANK 64) | = | | |
| (BLANK 40) | (BLANK 64) | = | | |
| (BLANK 44) | (BLANK 64) | = | | |

$\Sigma\Delta_L$ = _____ $\Sigma\Delta_L^2$ = _____

| MID-RANGE DIFFERENCE | | | $\Delta_M$ | $\Delta_M^2$ |
|---|---|---|---|---|
| (BLANK 29) | (BLANK 65) | = | | |
| (BLANK 33) | (BLANK 65) | = | | |
| (BLANK 37) | (BLANK 65) | = | | |
| (BLANK 41) | (BLANK 65) | = | | |
| (BLANK 45) | (BLANK 65) | = | | |

$\Sigma\Delta_M$ = _____ $\Sigma\Delta_M^2$ = _____

| HIGH RANGE DIFFERENCE | | | $\Delta_H$ | $\Delta_H^2$ |
|---|---|---|---|---|
| (BLANK 30) | (BLANK 66) | = | | |
| (BLANK 34) | (BLANK 66) | = | | |
| (BLANK 38) | (BLANK 66) | = | | |
| (BLANK 42) | (BLANK 66) | = | | |
| (BLANK 46) | (BLANK 66) | = | | |

$\Sigma\Delta_H$ = _____ $\Sigma\Delta_H^2$ = _____

K-6

**MEAN ERROR = $\overline{ME}_L$**

$$\overline{ME}_L = \frac{\Sigma\Delta_L}{5} = \frac{(\text{.....})}{(\ 5\ )}$$

$\overline{ME}_L$ = _____

**CONFIDENCE INTERVAL = $CI_L$**

$$CI_L = ((5 \times \Sigma\Delta_L^2) - (\Sigma\Delta_L)^2)^{0.5} \times 0.2776$$

$$CI_L = ((5 \times ____) - (____)^2)^{0.5} \times 0.2776$$

$CI_L$ = _____

**CALIBRATION ERROR = $CE_L$**

$$CE_L = |\overline{ME}_L| + CI_L$$

$$CE_L = |____| + (____)$$

$CE_L$ = _____

$E(6)_L$ = ..... (BLANK 49) − ..... (BLANK 64) =

$E(6)_L$ = _____

**MEAN ERROR = $\overline{ME}_M$**

$$\overline{ME}_M = \frac{\Sigma\Delta_M}{5} = \frac{(\text{.....})}{(\ 5\ )}$$

68 $\overline{ME}_M$ = _____

**CONFIDENCE INTERVAL = $CI_M$**

$$CI_M = ((5 \times \Sigma\Delta_M^2) - (\Sigma\Delta_M)^2)^{0.5} \times 0.2776$$

$$CI_M = ((5 \times ____) - (____)^2)^{0.5} \times 0.2776$$

71 $CI_M$ = _____

**CALIBRATION ERROR = $CE_M$**

$$CE_M = |\overline{ME}_M| + CI_M$$

$$CE_M = |____| + (____)$$

74 $CE_M$ = _____

**SIX-MINUTE AVERAGED ERROR**

$E(6)_M$ = ..... (BLANK 50) − ..... (BLANK 65) =

77 $E(6)_M$ = _____

**MEAN ERROR = $\overline{ME}_H$**

$$\overline{ME}_H = \frac{\Sigma\Delta_H}{5} = \frac{(\text{.....})}{(\ 5\ )}$$

69 $\overline{ME}_H$ = _____

**CONFIDENCE INTERVAL = $CI_H$**

$$CI_H = ((5 \times \Sigma\Delta_H^2) - (\Sigma\Delta_H)^2)^{0.5} \times 0.2776$$

$$CI_H = ((5 \times ____) - (____)^2)^{0.5} \times 0.2776$$

72 $CI_H$ = _____

**CALIBRATION ERROR = $CE_H$**

$$CE_H = |\overline{ME}_H| + CI_H$$

$$CE_H = |____| + (____)$$

75 $CE_H$ = _____

$E(6)_H$ = ..... (BLANK 51) − ..... (BLANK 66) =

78 $E(6)_H$ = _____

# APPENDIX D.

## Dynatron Model 1100 Audit Data Forms

**FINAL CALIBRATION ERROR DATA - MODEL 900RM**

[READ AND TRANSCRIBE FINAL CALIBRATION ERROR DATA.]

| EFFLUENT | LOW | EFFLUENT | MID | EFFLUENT | HIGH |
|---|---|---|---|---|---|
| I-26 _____. | I-27 _____. | I-28 _____. | I-29 _____. | I-30 _____. | I-31 _____. |
| I-32 _____. | I-33 _____. | I-34 _____. | I-35 _____. | I-36 _____. | I-37 _____. |
| I-38 _____. | I-39 _____. | I-40 _____. | I-41 _____. | I-42 _____. | I-43 _____. |
| I-44 _____. | I-45 _____. | I-46 _____. | I-47 _____. | I-48 _____. | I-49 _____. |
| I-50 _____. | I-51 _____. | I-52 _____. | I-53 _____. | I-54 _____. | I-55 _____. |
| I-56 _____. | | | | | |

[SIX-MINUTE AVERAGE DATA, IF APPLICABLE.]

| EFFLUENT | LOW | EFFLUENT | MID | EFFLUENT | HIGH |
|---|---|---|---|---|---|
| I-57 _____. | I-58 _____. | I-59 _____. | I-60 _____. | I-61 _____. | I-62 _____. |
| I-63 _____. | | | | | |

**CALCULATION OF MODEL 900A CALIBRATION ERROR RESULTS (INCREMENTAL PROCEDURE)**

**STACK EXIT CORRELATION OF AUDIT FILTER (TRANSMITTANCE)**

4 Low: $\left[1 - \frac{\text{(BLANK I-23)}}{100}\right]^{\text{(BLANK 12)}}$ _____

Mid: $\left[1 - \frac{\text{(BLANK I-24)}}{100}\right]^{\text{(BLANK 12)}}$ _____

High: $\left[1 - \frac{\text{(BLANK I-25)}}{100}\right]^{\text{(BLANK 12)}}$ _____

# CALIBRATION ERROR CALCULATION

| LOW-RANGE DIFFERENCE | | | $\Delta_L$ | $\Delta_L^2$ |
|---|---|---|---|---|
| _____ (BLANK 27) | – | _____ (BLANK 61) | = _____ | _____ |
| _____ (BLANK 31) | – | _____ (BLANK 61) | = _____ | _____ |
| _____ (BLANK 35) | – | _____ (BLANK 61) | = _____ | _____ |
| _____ (BLANK 39) | – | _____ (BLANK 61) | = _____ | _____ |
| _____ (BLANK 43) | – | _____ (BLANK 61) | = _____ | _____ |

$\Sigma\Delta_L$ = _____ $\Sigma\Delta_L^2$ = _____

| ITEM NO. | MID-RANGE DIFFERENCE | | | $\Delta_M$ | $\Delta_M^2$ |
|---|---|---|---|---|---|
| | _____ (BLANK 28) | – | _____ (BLANK 62) | = _____ | _____ |
| | _____ (BLANK 32) | – | _____ (BLANK 62) | = _____ | _____ |
| | _____ (BLANK 36) | – | _____ (BLANK 62) | = _____ | _____ |
| | _____ (BLANK 40) | – | _____ (BLANK 62) | = _____ | _____ |
| | _____ (BLANK 44) | – | _____ (BLANK 62) | = _____ | _____ |

$\Sigma\Delta_M$ = _____ $\Sigma\Delta_M^2$ = _____

| ITEM NO. | HIGH RANGE DIFFERENCE | | | $\Delta_H$ | $\Delta_H^2$ |
|---|---|---|---|---|---|
| | _____ (BLANK 29) | – | _____ (BLANK 63) | = _____ | _____ |
| | _____ (BLANK 33) | – | _____ (BLANK 63) | = _____ | _____ |
| | _____ (BLANK 37) | – | _____ (BLANK 63) | = _____ | _____ |
| | _____ (BLANK 41) | – | _____ (BLANK 63) | = _____ | _____ |
| | _____ (BLANK 45) | – | _____ (BLANK 63) | = _____ | _____ |

$\Sigma\Delta_H$ = _____ $\Sigma\Delta_H^2$ = _____

**MEAN ERROR = $\overline{ME}_L$**

$$\overline{ME}_L = \frac{\Sigma\Delta_L}{n} \frac{(\text{----------})}{(\text{----------})}$$

$\overline{ME}_L$ = _____

**CONFIDENCE INTERVAL = $CI_L$**

$$CI_L = ((n \times \Sigma\Delta_L^2) - (\Sigma\Delta_L)^2)^{0.5} \times 0.2776$$

$$CI_L = ((____ \times ____) - (____)^2)^{0.5} \times 0.2776$$

$CI_L$ = _____

**CALIBRATION ERROR = $CE_L$**

$$CE_L = |\overline{ME}_L| + CI_L$$

$$CE_L = |____| + (____)$$

$CE_L$ = _____

$E(6)_L$ = _____ (BLANK 48) – _____ (BLANK 61) =

$E(6)_L$ = _____

**MEAN ERROR = $\overline{ME}_M$**

$$\overline{ME}_M = \frac{\Sigma\Delta_M}{n} \frac{(\text{----------})}{(\text{----------})}$$

65 $\overline{ME}_M$ = _____

**CONFIDENCE INTERVAL = $CI_M$**

$$CI_M = ((n \times \Sigma\Delta_M^2) - (\Sigma\Delta_M)^2)^{0.5} \times 0.2776$$

$$CI_M = ((____ \times ____) - (____)^2)^{0.5} \times 0.2776$$

68 $CI_M$ = _____

**CALIBRATION ERROR = $CE_M$**

$$CE_M = |\overline{ME}_M| + CI_M$$

$$CE_M = |____| + (____)$$

71 $CE_M$ = _____

**SIX-MINUTE AVERAGED ERROR**

$E(6)_M$ = _____ (BLANK 49) – _____ (BLANK 62) =

74 $E(6)_M$ = _____

**MEAN ERROR = $\overline{ME}_H$**

$$\overline{ME}_H = \frac{\Sigma\Delta_H}{n} \frac{(\text{----------})}{(\text{----------})}$$

66 $\overline{ME}_H$ = _____

**CONFIDENCE INTERVAL = $CI_H$**

$$CI_H = ((n \times \Sigma\Delta_H^2) - (\Sigma\Delta_H)^2)^{0.5} \times 0.2776$$

$$CI_H = ((____ \times ____) - (____)^2)^{0.5} \times 0.2776$$

69 $CI_H$ = _____

**CALIBRATION ERROR = $CE_H$**

$$CE_H = |\overline{ME}_H| + CI_H$$

$$CE_H = |____| + (____)$$

72 $CE_H$ = _____

$E(6)_H$ = _____ (BLANK 50) – _____ (BLANK 63) =

75 $E(6)_H$ = _____

| LOW-RANGE DIFFERENCE | | | $\Delta_L$ | $\Delta_L^2$ |
|---|---|---|---|---|
| _____ (BLANK I-27) | − | _____ (BLANK I-67) | = _____ | _____ |
| _____ (BLANK I-33) | − | _____ (BLANK I-70) | = _____ | _____ |
| _____ (BLANK I-39) | − | _____ (BLANK I-73) | = _____ | _____ |
| _____ (BLANK I-45) | − | _____ (BLANK I-76) | = _____ | _____ |
| _____ (BLANK I-51) | − | _____ (BLANK I-79) | = _____ | _____ |

$\Sigma\Delta_L$ = _____ $\Sigma\Delta_L^2$ = _____

| MID-RANGE DIFFERENCE | | | $\Delta_M$ | $\Delta_M^2$ |
|---|---|---|---|---|
| _____ (BLANK I-29) | − | _____ (BLANK I-68) | = _____ | _____ |
| _____ (BLANK I-35) | − | _____ (BLANK I-71) | = _____ | _____ |
| _____ (BLANK I-41) | − | _____ (BLANK I-74) | = _____ | _____ |
| _____ (BLANK I-47) | − | _____ (BLANK I-77) | = _____ | _____ |
| _____ (BLANK I-53) | − | _____ (BLANK I-80) | = _____ | _____ |

$\Sigma\Delta_M$ = _____ $\Sigma\Delta_M^2$ = _____

| HIGH RANGE DIFFERENCE | | | $\Delta_H$ | $\Delta_H^2$ |
|---|---|---|---|---|
| _____ (BLANK I-31) | − | _____ (BLANK I-69) | = _____ | _____ |
| _____ (BLANK I-37) | − | _____ (BLANK I-72) | = _____ | _____ |
| _____ (BLANK I-43) | − | _____ (BLANK I-75) | = _____ | _____ |
| _____ (BLANK I-49) | − | _____ (BLANK I-78) | = _____ | _____ |
| _____ (BLANK I-55) | − | _____ (BLANK I-81) | = _____ | _____ |

$\Sigma\Delta_H$ = _____ $\Sigma\Delta_H^2$ = _____

**MEAN ERROR = $\overline{ME}_L$**

$$\overline{ME}_L = \frac{\Sigma\Delta_L}{5} = \frac{(\text{.....})}{(\ 5\ )}$$

$\overline{ME}_L$ = _____

**CONFIDENCE INTERVAL = $CI_L$**

$$CI_L = ((5 \times \Sigma\Delta_L^2) - (\Sigma\Delta_L)^2)^{0.5} \times 0.2776$$

$$CI_L = ((5 \times ____) - (____)^2)^{0.5} \times 0.2776$$

$CI_L$ = _____

**CALIBRATION ERROR = $CE_L$**

$$CE_L = |\overline{ME}_L| + CI_L$$

$$CE_L = |____| + (____)$$

$CE_L$ = _____

**MEAN ERROR = $\overline{ME}_M$**

$$\overline{ME}_M = \frac{\Sigma\Delta_M}{5} = \frac{(\text{.....})}{(\ 5\ )}$$

I-86 $\overline{ME}_M$ = _____

**CONFIDENCE INTERVAL = $CI_M$**

$$CI_M = ((5 \times \Sigma\Delta_M^2) - (\Sigma\Delta_M)^2)^{0.5} \times 0.2776$$

$$CI_M = ((5 \times ____) - (____)^2)^{0.5} \times 0.2776$$

I-89 $CI_M$ = _____

**CALIBRATION ERROR = $CE_M$**

$$CE_M = |\overline{ME}_M| + CI_M$$

$$CE_M = |____| + (____)$$

I-92 $CE_M$ = _____

**MEAN ERROR = $\overline{ME}_H$**

$$\overline{ME}_H = \frac{\Sigma\Delta_H}{5} = \frac{(\text{.....})}{(\ 5\ )}$$

I-87 $\overline{ME}_H$ = _____

**CONFIDENCE INTERVAL = $CI_H$**

$$CI_H = ((5 \times \Sigma\Delta_H^2) - (\Sigma\Delta_H)^2)^{0.5} \times 0.2776$$

$$CI_H = ((5 \times ____) - (____)^2)^{0.5} \times 0.2776$$

I-90 $CI_H$ = _____

**CALIBRATION ERROR = $CE_H$**

$$CE_H = |\overline{ME}_H| + CI_H$$

$$CE_H = |____| + (____)$$

I-93 $CE_H$ = _____

**SIX-MINUTE AVERAGED ERROR**

$E(6)_L$ = _____ (BLANK I-58) − _____ (BLANK I-82) =

$E(6)_L$ = _____

$E(6)_M$ = _____ (BLANK I-60) − _____ (BLANK I-83) =

I-95 $E(6)_M$ = _____

$E(6)_H$ = _____ (BLANK I-62) − _____ (BLANK I-84) =

I-96 $E(6)_H$ = _____

# AUDIT DATA SHEET
# LEAR SIEGLER RM-4 OPACITY MONITOR
# (Continued)

[REMOVE THE AUDIT FILTERS FROM THE PROTECTIVE COVERS. INSPECT, AND CLEAN EACH FILTER.]

[INSERT A FILTER IN THE JIG, WAIT APPROXIMATELY 2 MINUTES, AND RECORD THE OPACITY VALUE REPORTED BY THE OPACITY DATA RECORDER. REPEAT THE PROCESS 5 TIMES FOR EACH FILTER.]

[IF THE JIG ZERO VALUES CHANGE BY MORE THAN 1.0% OPACITY DURING ANY OF THE RUNS, READJUST THE JIG ZERO TO THE ORIGINAL VALUE AND REPEAT THE RUN.]

| ZERO | LOW | MID | HIGH | ZERO |
|---|---|---|---|---|
| _____ | _____ | _____ | _____ | _____ |
| | _____ | _____ | _____ | _____ |
| | _____ | _____ | _____ | _____ |
| | _____ | _____ | _____ | _____ |
| | _____ | _____ | _____ | _____ |

[IF SIX-MINUTE INTEGRATED DATA ARE AVAILABLE, ALLOW 13 MINUTES EACH FOR AN ADDITIONAL RUN OF THE ZERO, LOW, MID, HIGH, AND ZERO READINGS.]

| ZERO | LOW | MID | HIGH | ZERO |
|---|---|---|---|---|
| _____ | _____ | _____ | _____ | _____ |

[REMOVE AUDIT JIG AND CLOSE TRANSCEIVER.]

[RETURN TO CONVERTER CONTROL UNIT LOCATION.]

---

ZERO CURRENT CHECK (OPTIONAL)

[TURN THE "MODE" SWITCH TO THE "ZERO" POSITION AND THE "MEASUREMENT" SWITCH TO THE "OPTICAL DENSITY INPUT" POSITION.]

25 Zero current value, mA (OPTIONAL) _____

[TURN THE "MODE" SWITCH TO "OPERATE" AND THE "MEASUREMENT" SWITCH TO THE POSITION RECORDED IN BLANK 9.]

[OBTAIN A COPY OF THE AUDIT DATA FROM THE OPACITY DATA RECORDER AND ENSURE THAT THE DATA CAN BE READ AND INTERPRETED.]

---

[READ AND TRANSCRIBE FINAL CALIBRATION ERROR DATA.]

| ZERO | LOW | MID | HIGH | ZERO |
|---|---|---|---|---|
| 26 _____ | 27 _____ | 28 _____ | 29 _____ | 30 _____ |
| | 31 _____ | 32 _____ | 33 _____ | 34 _____ |
| | 35 _____ | 36 _____ | 37 _____ | 38 _____ |
| | 39 _____ | 40 _____ | 41 _____ | 42 _____ |
| | 43 _____ | 44 _____ | 45 _____ | 46 _____ |

[SIX-MINUTE AVERAGE DATA, IF APPLICABLE.]

| | | | | |
|---|---|---|---|---|
| 47 _____ | 48 _____ | 49 _____ | 50 _____ | 51 _____ |