United States
Environmental Protection
Agency

Office of Research and
Development
Washington DC 20460

EPA/540/R-99/500b
February 1999

EPA

Superfund Innovative Technology Evaluation Program

Technology Profiles
Tenth Edition

Volume 2
Emerging Technology Program

SITE

SUPERFUND INNOVATIVE
TECHNOLOGY EVALUATION

EPA/540/R-99/500b
February 1999

SITE
SUPERFUND INNOVATIVE
TECHNOLOGY EVALUATION

Technology Profiles
Tenth Edition

Volume 2
Emerging Technology Program

National Risk Management Research Laboratory
Office of Research and Development
U.S. Environmental Protection Agency
Cincinnati, Ohio 45268

Printed on Recycled Paper

NOTICE

The development of this document was funded by the U.S. Environmental Protection Agency (EPA) under Contract No. 68-C5-0037, Work Assignment No. 0-32, to Tetra Tech EM, Inc. The document was subjected to the Agency's administrative and peer review and was approved for publication as an EPA document. Mention of trade names or commercial products does not constitute endorsement or recommendation for use at any particular hazardous waste site.

FOREWORD

The U.S. Environmental Protection Agency (EPA) is charged by Congress with protecting the Nation's land, air, and water resources. Under a mandate of national environmental laws, EPA strives to formulate and implement actions leading to a compatible balance between human activities and the ability of the natural systems to support and nurture life. To meet these mandates, EPA's research program is providing data and technical support for solving environmental problems today and building a science knowledge base necessary to manage our ecological resources wisely, understand how pollutants affect our health, and prevent or reduce environmental risks in the future.

The National Risk Management Research Laboratory (NRMRL), is EPA's center for investigating technological and management approaches for reducing risks from threats to human health and the environment. The focus of NRMRL's research program is on methods for preventing and controlling pollution to air, land, water, and subsurface resources; protecting water quality in public water systems; remediating contaminated sites and groundwater; and preventing and controlling indoor air pollution. The goal of this research effort is to catalyze development and implementation of innovative, cost-effective environmental technologies; develop scientific and engineering information needed by EPA to support regulatory and policy decisions; and provide technical support and information transfer to ensure effective implementation of environmental regulations and strategies.

This document has been produced as part of NRMRL's strategic long-term research plan. It is published and made available by EPA's Office of Research and Development to assist the user community and to link researchers with their clients.

E. Timothy Oppelt, Director
National Risk Management Research Laboratory

ABSTRACT

The Superfund Innovative Technology Evaluation (SITE) Program, now in its thirteenth year, is an integral part of EPA's research into alternative cleanup methods for hazardous waste sites around the nation. The SITE Program was created to encourage the development and routine use of innovative treatment and monitoring and measurement technologies. Under the program, EPA enters into cooperative agreements with technology developers. These developers research and refine their innovative technologies at bench- or pilot-scale and then, with EPA's support, demonstrate them at hazardous waste sites. As a result, the SITE Program provides environmental decision-makers with data on new, viable treatment technologies that may have performance or cost advantages compared to traditional treatment technologies.

The SITE profiles documents, prepared between July 1998 and October 1998, are intended as reference guides for those interested in technologies participating in the SITE Demonstration Program (Volume I), Emerging Technology Program (Volume II), and Monitoring and Measurement Technologies (MMT) Program (Volume III). The two-page profiles are organized into two sections for each program (except for the MMT Program) for completed and ongoing projects, and are presented in alphabetical order by developer name. Reference tables for SITE Program participants precede the sections and contain EPA and developer contacts. Inquiries about a SITE technology evaluation or the SITE Program should be directed to the specific EPA project manager; inquiries on the technology process should be directed to the specific technology developer.

Each technology profile contains (1) a technology developer and process name, (2) a technology description, including a schematic diagram or photograph of the process (if available), (3) a discussion of waste applicability, (4) a project status report, and (5) EPA project manager and technology developer contacts. The profiles also include summaries of demonstration results, if available. The technology description and waste applicability sections are written by the developer. EPA prepares the status and demonstration results sections.

A Trade Name Index and Applicability Index are also included in the back of each volume. The Trade Name Index allows the reader to identify a technology based on current trade name, former trade name, current company name, and former company name. The Applicability Index is organized by 11 media categories, 19 waste categories, and 14 technology type categories.

TABLE OF CONTENTS

Section **Page**

NOTICE ii
FOREWORD iii
ABSTRACT iv
ACKNOWLEDGEMENTS viii

SITE PROGRAM DESCRIPTION 1
SITE PROGRAM CONTACTS 6

EMERGING TECHNOLOGY PROGRAM 7

Completed Emerging Technology Program Projects
AEA Technology PLC, National Environmental Technology Centre
(Soil Separation and Washing Process) 16
Arizona State University/Zentox Corporation
(Photocatalytic Oxidation with Air Stripping) 18
ART International, Inc. (Low-Energy Extraction Process [LEEP®]) 20
Atomic Energy of Canada, Limited (Chemical Treatment and Ultrafiltration) 22
Atomic Energy of Canada Limited
(Ultrasonic-Aided Leachate Treatment) 24
Battelle Memorial Institute (In Situ Electroacoustic Soil Decontamination) 26
BioTrol® (Methanotrophic Bioreactor System) 28
Center for Hazardous Materials Research
(Acid Extraction Treatment System) 30
Center for Hazardous Materials Research
(Organics Destruction and Metals Stabilization) 32
COGNIS, Inc. (Biological/Chemical Treatment) 34
Concurrent Technologies (Smelting Lead-Containing Waste) 36
ENERGIA, Inc. (Reductive Photo-Dechlorination Treatment) 38
Energy and Environmental Research Corporation (Hybrid Fluidized Bed System) 40
Energy and Environmental Research Corporation (Reactor Filter System) 42
Environmental Biotechnologies, Inc. (Fungal Degradation Process) 44
Ferro Corporation (Waste Vitrification Through Electric Melting) 46
General Atomics, Nuclear Remediation Technologies Division
(Acoustic Barrier Particulate Separator) 48
Harding Lawson Associate (Two-Zone, Plume Interception, In Situ Treatment Strategy) 50
Hazardous Substance Management Research Center at New Jersey Institute of Technology and Rutgers, The State University of New Jersey
(Pneumatic Fracturing and Bioremediation Process) 52
High Voltage Environmental Applications, Inc.
(High-Energy Electron Beam Irradiation) 54
Institute of Gas Technology (Chemical and Biological Treatment) 56
Institute of Gas Technology (Fluid Extraction-Biological Degradation Process) 58
Institute of Gas Technology (Fluidized-Bed/Cyclonic Agglomerating Combustor) 60

TABLE OF CONTENTS (Continued)

Section **Page**

Completed Emerging Technology Program Projects (Continued)

Institute of Gas Technology (Supercritical Extraction/Liquid Phase Oxidation) 62
IT Corporation (Batch Steam Distillation and Metal Extraction) 64
IT Corporation (Chelation/Electrodeposition of Toxic Metals from Soils) 66
IT Corporation (Mixed Waste Treatment Process) 68
IT Corporation (Photolytic and Biological Soil Detoxification) 70
IT Corporation (Tekno Associates Bioslurry Reactor) 72
KSE, Inc. (Adsorption-Integrated-Reaction Process) 74
Lewis Environmental Services, Inc./Hickson Corporation
(Chromated Copper Arsenate Soil Leaching Process) 76
Media & Process Technology (Bioscrubber) 78
Membrane Technology and Research, Inc. (VaporSep® Membrane Process) 80
Montana College of Mineral Science and Technology
(Air-Sparged Hydrocyclone) 82
Montana College of Mineral Science and Technology
(Campbell Centrifugal Jig) 84
New Jersey Institute of Technology (GHEA Associates Process) 86
PSI Technologies, A Division of Physical Sciences Inc.
(Metals Immobilization and Decontamination of Aggregate Solids) 88
Pulse Sciences, Inc. (X-Ray Treatment of Aqueous Solutions) 90
RECRA Environmental, Inc. (Alternating Current Electrocoagulation Technology) 92
Remediation Technologies, Inc. (Biofilm Reactor for Chlorinated Gas Treatment) 94
Resource Management & Recovery (AlgaSORB® Biological Sorption) 96
State University of New York at Oswego, Environmental Research Center
(Electrochemical Peroxidation of PCB-Contaminated Sediments and Waters) 98
Svedala Industries, Inc. (PYROKILN THERMAL ENCAPSULATION Process) 100
Thermatrix, Inc. (Photolytic Oxidation Process) 102
Trinity Environmental Technologies, Inc.
(PCB- and Organochlorine-Contaminated Soil Detoxification) 104
University of Dayton Research Institute (Photothermal Detoxification Unit) 106
University of South Carolina (In Situ Mitigation of Acid Water) 108
University of Washington (Adsorptive Filtration) 110
UV Technologies, Inc. (PhotoCAT™ Process) 112
Western Product Recovery Group, Inc.
(Coordinate, Chemical Bonding, and Adsorption Process) 114
Roy F. Weston, Inc. (Ambersorb® 563 Adsorbent) 116

Ongoing Emerging Technology Program Projects

Electrokinetics, Inc. (In Situ Bioremediation by Electrokinetic Injection) 120
ENERGIA, Inc. (Reductive Thermal and Photo-Thermal Oxidation
Processes for Enhanced Conversion of Chlorocarbons) 122
Geo-Microbial Technologies, Inc. (Metals Release and Removal from Wastes) 124

TABLE OF CONTENTS (Continued)

Section **Page**

Ongoing Emerging Technology Program Projects (Continued)
IT Corporation (Oxygen Microbubble In Situ Bioremediation) 126
Phytokinetics, Inc. (Phytoremediation of Contaminated Soils) 128
Pintail Systems, Inc. (Biomineralization of Metals) 130
Pulse Sciences, Inc. (X-Ray Treatment of Organically Contaminated Soils) 132
Thermo NUtech (Segmented Gate System) 134
University of Houston (Concentrated Chloride Extraction and Recovery of Lead) 136
University of Wisconsin-Madison (Photoelectrocatalytic Degradation and Removal) 138

DOCUMENTS AVAILABLE FROM THE U.S. EPA
NATIONAL RISK MANAGEMENT RESEARCH LABORATORY,
SUPERFUND TECHNOLOGY DEMONSTRATION DIVISION 141
VIDEO REQUEST FORM 153
TRADE NAME INDEX 157
APPLICABILITY INDEX 167

LIST OF FIGURES

Figure **Page**

1 DEVELOPMENT OF INNOVATIVE TECHNOLOGIES 2

2 INNOVATIVE TECHNOLOGIES IN THE DEMONSTRATION PROGRAM 3

3 INNOVATIVE TECHNOLOGIES IN THE EMERGING TECHNOLOGY PROGRAM . . 4

LIST OF TABLES

Table **Page**

1 COMPLETED SITE EMERGING TECHNOLOGY PROGRAM PROJECTS
AS OF OCTOBER 1998 8

2 ONGOING SITE EMERGING TECHNOLOGY PROGRAM PROJECTS
AS OF OCTOBER 1998 118

ACKNOWLEDGEMENTS

The project manager responsible for the preparation of this document is Teri Richardson of EPA's National Risk Management Research Laboratory in Cincinnati, Ohio. This document was prepared under the direction of Robert Olexsey, Director of the Land Remediation and Pollution Control Division. Key program area contributors for EPA include Stephen Billets, Annette Gatchett, and Randy Parker. Special acknowledgement is given to the individual EPA SITE project managers and technology developers who provided guidance and technical support.

Tetra Tech EM, Inc. prepared this document under the direction and coordination of Teri Richardson and Annette Gatchett.

SITE PROGRAM DESCRIPTION

The U.S. Environmental Protection Agency's (EPA) Superfund Innovative Technology Evaluation (SITE) Program, now in its thirteenth year, encourages the development and implementation of (1) innovative treatment technologies for hazardous waste site remediation, and (2) characterization and monitoring technologies for evaluating the nature and extent of hazardous waste site contamination.

The SITE Program was established by EPA's Office of Solid Waste and Emergency Response (OSWER) and the Office of Research and Development (ORD) in response to the 1986 Superfund Amendments and Reauthorization Act (SARA), which recognized a need for an "Alternative or Innovative Treatment Technology Research and Demonstration Program." The SITE Program is administered by ORD's National Risk Management Research Laboratory (NRMRL), headquartered in Cincinnati, Ohio.

The SITE Program includes the following component programs:

- **Demonstration Program** – Evaluates and verifies cost and performance of promising innovative technologies at selected hazardous waste sites to provide reliable performance, cost, and applicability information for site clean-up decision making

- **Emerging Technology Program** – Provides funding to developers to continue research efforts from the bench– and pilot–scale levels to promote the development of innovative technologies

- **Monitoring and Measurement Technologies Program** – Evaluates technologies that detect, monitor, and measure hazardous and toxic substances to provide more cost–effective methods for producing real–time data during site characterization and remediation

- **Technology Transfer Program** – Disseminates technical information, including engineering, performance, and cost data, on innovative technologies to remove impediments for using innovative technologies

This Technology Profiles document, a product of the Technology Transfer Program, describes completed and ongoing projects in the Demonstration, Emerging Technology, and Monitoring and Measurement Programs. Figure 1 shows the relationship among the programs and depicts the process of technology development from initial concept to commercial use.

In the Demonstration Program, the technology is field–tested on hazardous waste materials. Engineering and cost data are gathered on the innovative technology so that potential users can assess the technology's applicability to a particular site. Data collected during the field demonstration are used to assess the performance of the technology, the potential need for pre– and post–processing of the waste, applicable types of wastes and waste matrices, potential operating problems, and approximate capital and operating costs.

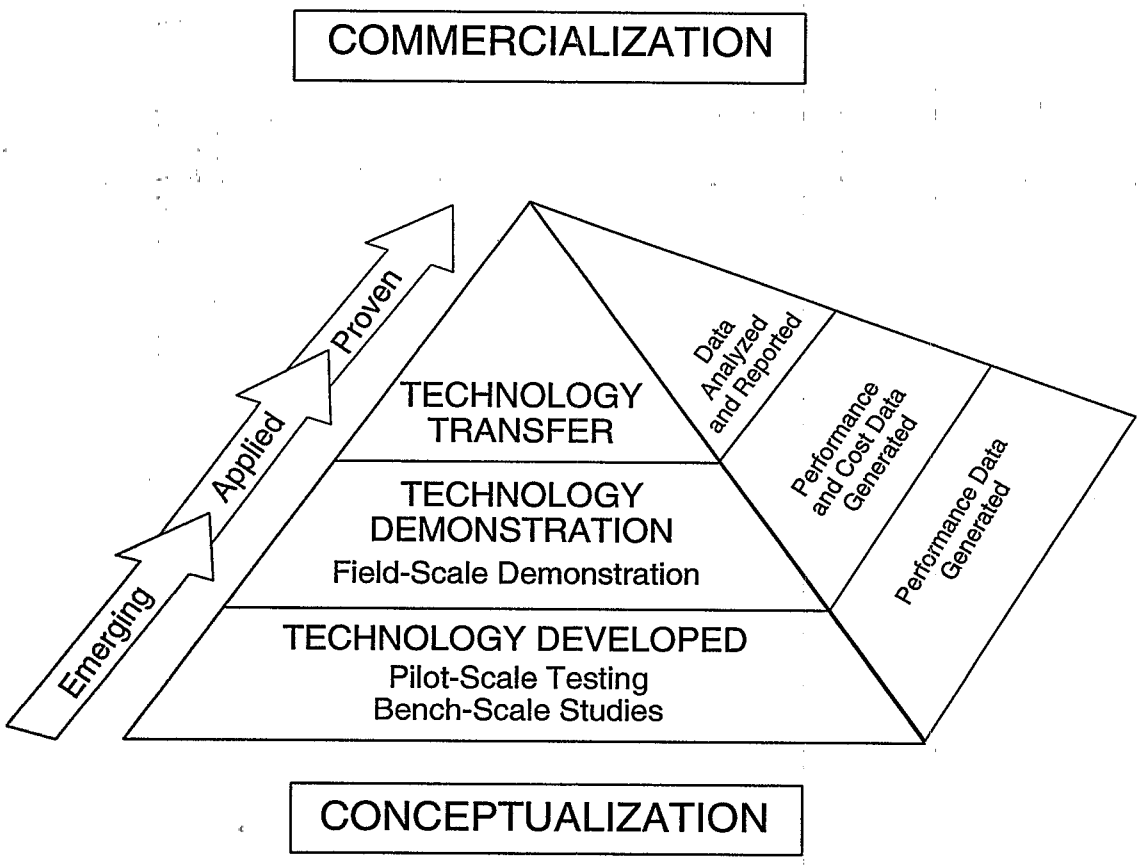

Figure 1: Development of Innovative Technologies

At the conclusion of a SITE demonstration, EPA prepares an Innovative Technology Evaluation Report (ITER), Technology Evaluation Report (TER), a Technology Capsule, and a Demonstration Bulletin. Often, a videotape of the demonstration is also prepared. These reports evaluate all available information on the technology and analyze its overall applicability to other site characteristics, waste types, and waste matrices. Testing procedures, performance and cost data, and quality assurance and quality control standards are also presented. These demonstration documents are distributed by EPA to provide reliable technical data for environmental decision-making and to promote the technology's commercial use.

The Demonstration Program currently has 106 developers conducting 116 demonstrations. Of these projects, 85 demonstrations are complete and 28 are ongoing. The projects are divided into the following categories: thermal destruction (10), biological degradation (21), physical/chemical treatment (45), solidification/stabilization (10), physical/chemical radioactive waste treatment (2), physical/chemical thermal desorption (19), physical/chemical biological degradation (1), materials handling (3), and other (2). Several technologies represent more than one treatment category. Figure 2 shows the breakdown of technologies in the Demonstration Program. Profiles for technologies demonstrated under the Demonstration Program are located in Volume I.

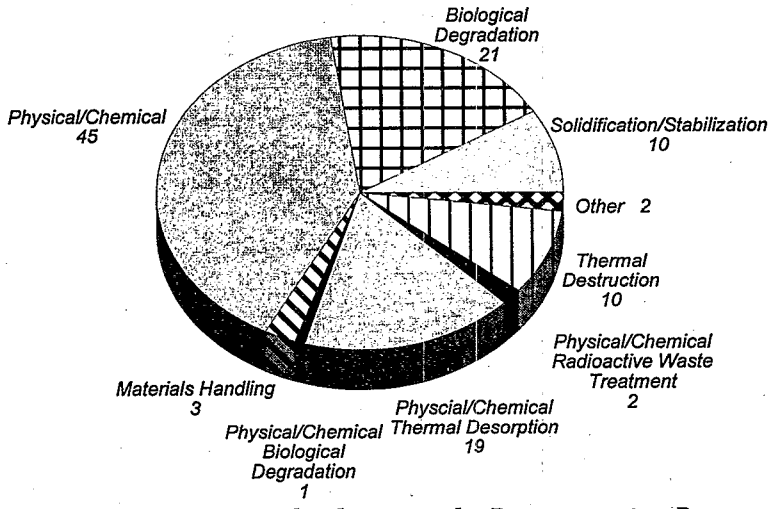

Figure 2: Innovative Technologies in the Demonstration Program

Under the Emerging Technology Program, EPA provides technical and financial support to developers for bench- and pilot-scale testing and evaluation of innovative technologies that are at a minimum proven on the conceptual and bench-scale levels. The program provides an opportunity for a private developer to research and develop a technology for field application and possible evaluation under the Demonstration Program. A technology's performance is documented in a Final Report, journal article, Summary, and Bulletin.

EPA has provided technical and financial support to 77 projects in the Emerging Technology Program. Of these projects, 66 are completed, 7 are continuing in the program, and 4 have exited the program. Eighteen Emerging Technology Program projects are participating in the Demonstration Program, and 7 of these demonstration projects are competed. The 73 active technologies are divided into the following categories: thermal destruction (9), physical/chemical treatment (38), biological degradation (19), solidification/stabilization (2), and materials handling (5). Figure 3 displays the breakdown of technologies in the Emerging Technology Program. Profiles for technologies demonstrated under the Emerging Technology program are located in Volume II.

b

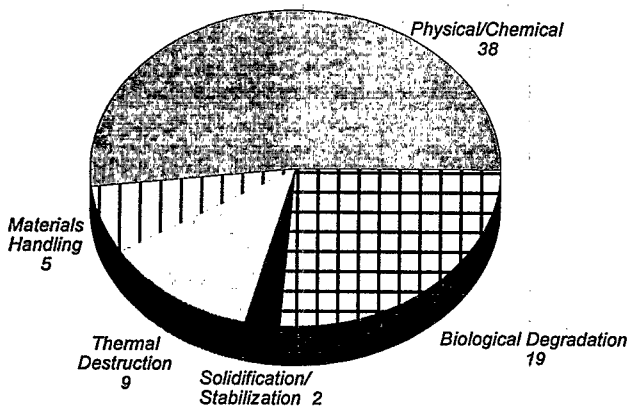

Figure 3: Innovative Technologies in the Emerging Technology Program

The Monitoring and Measurement Technologies (MMT) Program's goal is to assess innovative and alternative monitoring, measurement, and site characterization technologies. To date, 38 technology demonstrations have occurred under the MMT Program. These demonstrations have included four cone penetrometers, 6 field portable X-ray fluorescence units, 6 portable gas chromatographs, 4 spectrophotometers, 12 field test kits, and 6 soil samplers. Profiles for technologies demonstrated under the MMT Program are located in Volume III.

In the Technology Transfer Program, technical information on innovative technologies in the Demonstration Program, Emerging Technology Program, and MMT Program is disseminated to increase the awareness and promote the use of innovative technologies for assessment and remediation at Superfund sites. The goal of technology transfer activities is to promote communication among individuals requiring current technical information for conducting site investigations and cleanups.

The Technology Transfer Program reaches the environmental community through many media, including:

- Program-specific regional, state, and industry brochures
- On-site Visitors' Days during SITE demonstrations
- Demonstration videotapes
- Project-specific fact sheets to comply with site community relations plans
- ITERs, Demonstration Bulletins, Technology Capsules, and Project Summaries
- The SITE Exhibit, displayed nationwide and internationally at conferences
- Networking through forums, associations, regions, and states
- Technical assistance to regions, states, and remediation cleanup contractors

SITE information, including an electronic version of this document, is available through the following on-line information clearinghouses:

SITE Program Home Page: *http://www.epa.gov/ORD/SITE*

Alternative Treatment Technology Information Center (ATTIC)
Internet Access: *http://www.epa.gov/attic*

Cleanup Information Bulletin Board System (CLU-IN)
Help Desk: 301-589-8368; Internet Access: *http://www.clu-in.org*

EPA Remediation and Characterization Innovative Technologies
Internet Access: *http://www.epa.reachit.org*

Groundwater Remediation Technologies Center
Internet Access: *http://www.gwrtac.org*

Technical reports may be obtained by calling the National Service Center for Environmental Publications in Cincinnati, Ohio. To find out about newly published documents or to be placed on the SITE mailing list, call or write to:

USEPA/NSCEP
P.O. Box 42419
Cincinnati, OH 45242-2419
1-800-490-9198

SITE PROGRAM CONTACTS

The SITE Program is administered by EPA's Office of Research and Development (ORD), specifically the National Risk Management Research Laboratory (NRMRL). For further information on the SITE Program or its component programs contact:

Land Remediation and Pollution Control Division

Robert Olexsey
U.S. Environmental Protection Agency
26 West Martin Luther King Drive
Cincinnati, Ohio 45268
513-569-7861
Fax: 513-569-7620

SITE Program

Annette Gatchett
U.S. Environmental Protection Agency
26 West Martin Luther King Drive
Cincinnati, Ohio 45268
513-569-7697
Fax: 513-569-7620

Monitoring and Measurement Program

Stephen Billets
U.S. Environmental Protection Agency
P. O. Box 93478
Las Vegas, Nevada 89193-3478
702-798-2232
Fax: 702-798-2261

Emerging Technology Program

Randy Parker
U.S. Environmental Protection Agency
26 West Martin Luther King Drive
Cincinnati, Ohio 45268
513-569-7271
Fax: 513-569-7620

Remediation and Control Branch

John Martin
U.S. Environmental Protection Agency
26 West Martin Luther King Drive
Cincinnati, Ohio 45268
513-569-7758
Fax: 513-569-7620

Treatment and Destruction Branch

Laurel Staley
U.S. Environmental Protection Agency
26 West Martin Luther King Drive
Cincinnati, Ohio 45268
513-569-7863
Fax: 513-569-7105

SITE Management Support Branch

Patricia Erickson
U.S. Environmental Protection Agency
26 West Martin Luther King Drive
Cincinnati, Ohio 45268
513-569-7884
Fax: 513-569-7676

EMERGING TECHNOLOGY PROGRAM

The Emerging Technology Program provides an opportunity to research and develop technologies at bench- and pilot-scale levels. The goal is to promote and support the development of alternative technologies for field applications at Superfund site remediations.

Technologies were solicited yearly for the Emerging Technology Program through Requests for Preproposal. After a technical review of the preproposals, selected candidates were invited to submit a Cooperative Agreement Application and detailed project proposal that underwent another full technical review. The Cooperative Agreement between EPA and the technology developer required cost sharing. Projects were considered for either a 1- or 2-year developmental effort, providing awards of up to $150,000 per year, with a maximum of $300,000 over 2 years. Second-year funding depended on achieving significant progress during the first year. After the second year or significant progress, emerging technologies were considered for the SITE Demonstration Program.

To enable EPA to accept additional technologies into the Emerging Technology Program, Interagency Agreements have been made between EPA and the U.S. Department of Energy (DOE) and the U.S. Air Force (USAF). DOE has helped fund 21 projects, and USAF has helped fund eight projects.

Fifty-one Emerging Technology Program projects have been completed, and several more will be completed in 1999. Completed Emerging Technology Program participants are presented in alphabetical order in Table 1 and in the technology profiles that follow; ongoing program participants are presented in alphabetical order in Table 2 and in the profiles that follow.

TABLE 1
Completed SITE Emerging Technology Program Projects as of October 1998

Developer	Technology	Technology Contact	EPA Project Manager	Applicable Media	Applicable Waste	
					Inorganic	Organic
AEA Technology PLC, National Environmental Technology Centre (formerly Warren Spring Laboratory), Oxfordshire, England	Soil Separation and Washing Process	Steve Barber 011-44-1235-463062	Mary Stinson 908-321-6683	Soil, Sludge, Sediment	Metals	Petroleum Hydrocarbons, PAHs
Arizona State University/ Zentox Corporation, Tempe, AZ	Photocatalytic Oxidation with Air Stripping	Gregory Raupp 602-965-2828 Elliot Berman 352-867-1320	Norma Lewis 513-569-7665	Air Streams	Not Applicable	VOCs
ART International, Inc. (formerly Enviro-Sciences, Inc.), Denville, NJ	Low-Energy Extraction Process (LEEP®)	Werner Steiner 201-627-7601	Jack Hubbard 513-569-7507	Soil, Sludge, Sediment	Not Applicable	Tar, Creosote, PCBs, Chlorinated Hydrocarbons, PAHs, Pesticides
Atomic Energy of Canada, Limited, Chalk River, Ontario, Canada	Chemical Treatment and Ultrafiltration	Leo Buckley Les Moschuk 613-584-3311	John Martin 513-569-7758	Groundwater, Leachate, Wastewater	Heavy Metals	Not Applicable
Atomic Energy of Canada, Limited, Chalk River, Ontario, Canada	Ultrasonic-Aided Leachate Treatment	Shaun Cotnam Dr. Shiv Vijayan 613-584-3311, ext. 3220/6057	Randy Parker 513-569-7271	Acid Mine Drainage	Heavy Metals, Radionuclides	Not Applicable
Battelle Memorial Institute, Columbus, OH	In Situ Electroacoustic Soil Decontamination	Satya Chauhan 614-424-4812	Randy Parker 513-569-7271	Soil	Heavy Metals	Not Applicable

TABLE 1 (Continued)

Completed SITE Emerging Technology Program Projects as of October 1998

Developer	Technology	Technology Contact	EPA Project Manager	Applicable Media	Applicable Waste	
					Inorganic	Organic
BioTrol®, Eden Prairie, MN	Methanotrophic Bioreactor System	Durell Dobbins 612-942-8032	David Smith 303-293-1475	Water	Not Applicable	Halogenated Hydrocarbons
Center for Hazardous Materials Research, Pittsburgh, PA	Acid Extraction Treatment System	Stephen Paff 412-826-5321 ext. 233	George Moore 513-569-7991	Soil	Heavy Metals	Not Applicable
Center for Hazardous Materials Research, Pittsburgh, PA	Organics Destruction and Metals Stabilization	Stephen Paff 412-826-5321 ext. 233	Randy Parker 513-569-7271	Soil, Sediment	Heavy Metals	Nonspecific Organics
COGNIS, Inc.	Biological/Chemical Treatment	Not Available	Steven Rock 513-569-7149	Soil, Sludge, Sediment	Heavy Metals	Nonspecific Organics
Concurrent Technologies (formerly Center for Hazardous Materials Research) Pittsburgh, PA	Smelting Lead-Containing Waste	Brian Bosilovich 412-826-5321, ext. 230	Laurel Staley 513-569-7863	Solids, Lead-Containing Waste	Lead	Not Applicable
Energia, Inc. Princeton, NJ	Reductive Photo-Dechlorination Treatment	Moshe Lavid 609-799-7970	Michelle Simon 513-569-7469	Liquids, Solids, Gas	Not Applicable	Volatile Chlorinated Hydrocarbons
Energy and Environmental Research Corporation,** Irvine, CA	Hybrid Fluidized Bed System	Richard Koppang 714-859-8851	Teri Richardson 513-569-7949	Soil, Sludge	Volatile Inorganics, Metals	Nonspecific Organics

TABLE 1 (Continued)
Completed SITE Emerging Technology Program Projects as of October 1998

Developer	Technology	Technology Contact	EPA Project Manager	Applicable Media	Applicable Waste	
					Inorganic	Organic
Energy and Environmental Research Corporation, Irvine, CA	Reactor Filter System	Neil Widmer 714-859-8851	Steven Rock 513-569-7149	Gas Emissions	Volatile Toxic Metals	Condensed-Phase Organics
Environmental Biotechnologies San Carlos, CA	Fungal Degradation Process	Douglas Munnecke 415-596-1020	Ronald Lewis 513-569-7856	Soil, Sediment	Not Applicable	Coal Tar
Ferro Corporation, Independence, OH	Waste Vitrification Through Electric Melting	S.K. Muralidhar 216-641-8580	Randy Parker 513-569-7271	Soil, Sludge, Sediment	Nonspecific Inorganics	Nonspecific Organics
General Atomics, Nuclear Remediation Technologies Division San Diego, CA	Acoustic Barrier Particulate Separator	Anthony Gattuso 619-455-2910	Ronald Lewis 513-569-7856	Soil, Sediment, Sludges, Other Solid Wastes, Liquid Wastes	Not Applicable	SVOCs
Harding Lawson Associates (Formerly ABB Environmental Services, Inc.) Wakefield, MA	Two-Zone, Plume Interception, In Situ Treatment Strategy	Jaret Johnson Willard Murray 781-246-6606	Ronald Lewis 513-569-7856	Groundwater, Soils	Not Applicable	Chlorinated and Nonchlorinated Organics

TABLE 1 (Continued)
Completed SITE Emerging Technology Program Projects as of October 1998

Developer	Technology	Technology Contact	EPA Project Manager	Applicable Media	Applicable Waste	
					Inorganic	Organic
Hazardous Substance Management Research Center at New Jersey Institute of Technology, and Rutgers, The State University of New Jersey, Newark, NJ	Pneumatic Fracturing and Bioremediation Process	John Schuring 201-596-5849 David Kosson 908-445-4346	Randy Parker 513-569-7271	Soil	Not Applicable	Biodegradable Organics
High Voltage Environmental Applications, Inc. (formerly Electron Beam Research Facility, Florida International University, and University of Miami),[***] Miami, FL	High-Energy Electron Irradiation	William Cooper 305-593-5330	Mary Stinson 908-321-6683	Liquid, Sludge, Soil, Sediment	Not Applicable	Most Organics
Institute of Gas Technology,[**] Des Plaines, IL	Chemical and Biological Treatment	Robert Kelley 847-768-0722	Ronald Lewis 513-569-7856	Soil, Sludge, Groundwater, Surface Water	Not Applicable	Nonspecific Organics
Institute of Gas Technology,[**] Des Plaines, IL	Fluid Extraction-Biological Degradation Process	Robert Paterek 847-768-0720	Annette Gatchett 513-569-7697	Soil, Sludge, Sediment	Not Applicable	Nonspecific Organics
Institute of Gas Technology, Des Plaines, IL	Fluidized-Bed/Cyclonic Agglomerating Combustor	Amir Rehmat 847-768-0588 Michael Mensinger 847-768-0602	Teri Richardson 513-569-7949	Solid, Liquid, Gas, Soil, Sludge	Nonvolatile Inorganics	Nonspecific Organics

TABLE 1 (Continued)
Completed SITE Emerging Technology Program Projects as of October 1998

Developer	Technology	Technology Contact	EPA Project Manager	Applicable Media	Applicable Waste	
					Inorganic	Organic
Institute of Gas Technology, Des Plaines, IL	Supercritical Extraction/Liquid Phase Oxidation	Michael Mensinger 847-768-0602	Valdis Kukainis 513-569-7855	Soil, Sludge	Not Applicable	PAHs, PCBs, Other Organics
IT Corporation, Knoxville, TN	Batch Steam Distillation and Metal Extraction	Stuart Shealy 423-690-3211	Ronald Lewis 513-569-7856	Soil, Sludge, Sediment	Heavy Metals, Other Inorganics	Nonspecific Organics
IT Corporation, Knoxville, TN	Chelation/Electrodeposition of Toxic Metals from Soils	Radha Krishnan 513-782-4700	George Moore 513-569-7991	Soil, Sludge	Metals	Not Applicable
IT Corporation, Knoxville, TN	Mixed Waste Treatment Process	Ed Alperin 615-690-3211	Douglas Grosse 513-569-7844	Soil, Sludge	Nonspecific Inorganics, Radionuclides	Nonspecific Organics
IT Corporation, Knoxville, TN	Photolytic and Biological Soil Detoxification	Duane Graves 423-690-3211	Randy Parker 513-569-7271	Soil	Not Applicable	PCBs, Pesticides, Dioxins, PAHs
IT Corporation, Knoxville, TN	Tekno Associates Bioslurry Reactor	Kandi Brown 423-690-3211	Brunilda Dávila 513-569-7849	Soil, Sludge	Not Applicable	PAHs
KSE, Inc.,*** Amherst, MA	Adsorption-Integrated-Reaction Process	J.R. Kittrell 413-549-5506	Vince Gallardo 513-569-7176	Air Streams	Not Applicable	VOCs
Lewis Environmental Services, Inc./Hickson Corporation, Pittsburgh, PA	Chromated Copper Arsenate Soil Leaching Process	Tom Lewis III 412-322-8100	Randy Parker 513-569-7271	Soil, Sediment, Sludge	Heavy Metals, Other Inorganics	Not Applicable

TABLE 1 (Continued)
Completed SITE Emerging Technology Program Projects as of October 1998

Developer	Technology	Technology Contact	EPA Project Manager	Applicable Media	Applicable Waste	
					Inorganic	Organic
Media & Process Technology (formerly Aluminum Company of America) Pittsburgh, PA	Bioscrubber	Paul Liu 412-826-3711	Paul dePercin 513-569-7797	Soil, Water, Air	Not Applicable	Petroleum Hydrocarbons, Alcohols, Ketones, Amines
Membrane Technology and Research, Inc., Menlo Park, CA	VaporSep® Membrane Process	Marc Jacobs Doug Gottschlich 415-328-2228	Paul dePercin 513-569-7797	Gaseous Waste Streams	Not Applicable	Halogenated and Nonhalogenated Organics
Montana College of Mineral Science and Technology, Butte, MT	Air-Sparged Hydrocyclone	Theodore Jordan 406-496-4112 406-496-4193	Ed Bates 513-569-7774	Solids (Fine Particles)	Metals	Not Applicable
Montana College of Mineral Science and Technology, Butte, MT	Campbell Centrifugal Jig	Gordon Ziesing 406-496-4112 406-496-4193	Jack Hubbard 513-569-7507	Soil, Solids	Heavy Metals	Not Applicable
New Jersey Institute of Technology, Newark, NJ	GHEA Associates Process	Itzhak Gotlieb 201-226-4642	Brunilda Davila 513-569-7849	Soil, Sludge, Sediment, Water, Industrial Effluent	Heavy Metals	Most Organics
PSI Technologies, A Division of Physical Sciences Inc., Andover, MA	Metals Immobilization and Decontamination of Aggregate Solids	Joseph Morency 508-689-0003	Mark Meckes 513-569-7348	Soil, Sludge, Sediment	Heavy Metals, Volatile Metals	Low Volatile Organics, Organometallics
Pulse Sciences, Inc., San Leandro, CA	X-Ray Treatment of Aqueous Solutions	Vernon Bailey 510-632-5100, ext. 227	Vincente Gallardo 513-569-7176	Groundwater, Liquid, Leachate	Not Applicable	VOCs, SVOCs

TABLE 1 (Continued)
Completed SITE Emerging Technology Program Projects as of October 1998

Developer	Technology	Technology Contact	EPA Project Manager	Applicable Media	Applicable Waste	
					Inorganic	Organic
RECRA Environmental, Inc. (Formerly Electro-Pure Systems, Inc.), Amherst, NY	Alternating Current Electrocoagulation Technology	Kenneth Kinecki 800-527-3272	Randy Parker 513-569-7271	Groundwater, Wastewater, Leachate	Heavy Metals	Petroleum By-products, Coal-Tar Derivatives
Remediation Technologies, Inc., Seattle, WA	Biofilm Reactor for Chlorinated Gas Treatment	Hans Stroo 206-624-9349	Ronald Lewis 513-569-7856	Gas	Not Applicable	Volatile Chlorinated Hydrocarbons
Resource Management & Recovery, (formerly Bio-Recovery Systems, Inc.),** Las Cruces, NM	AlgaSORB© Biological Sorption	Michael Hosea 505-382-9228	Ronald Lewis 513-569-7856	Groundwater, Leachate, Wastewater	Metals, Uranium	Not Applicable
State University of New York at Oswego, Environmental Research Center, Oswego, NY	Electrochemical Peroxidation of PCB-Contaminated Sediments and Waters	Ronald Scrudato Jeffrey Chiarenzelli 315-341-3639	Hector Moreno 513-569-7882	Soil, Slurries, Leachates	Not Applicable	PCBs, Other Chlorinated Organics, VOCs, SVOCs
Svedala Industries, Inc., Waukesha, WI	PYROKILN THERMAL ENCAPSULATION Process	Jim Kidd 414-798-6341 Glenn Heian 414-762-1190	Marta K. Richards 513-569-7692	Soil, Sludge, Sediment	Metals	Nonspecific Organics
Thermatix, Inc. (formerly Purus, Inc.) San Jose, CA	Photolytic Oxidation Process	Steve McAdams 408-453-0490	Norma Lewis 513-569-7665	Soil, Groundwater	Not Applicable	DCE, PCE, TCE, Vinyl Chloride

TABLE 1 (Continued)
Completed SITE Emerging Technology Program Projects as of October 1998

Developer	Technology	Technology Contact	EPA Project Manager	Applicable Media	Applicable Waste	
					Inorganic	Organic
Trinity Environmental Technologies, Inc., Mound Valley, KS	PCB- and Organochlorine-Contaminated Soil Detoxification	Duane Koszalka 316-328-3222	Paul dePercin 513-569-7797	Soil, Sludge, Sediment	Not Applicable	PCBs, PCP, Other Chlorinated Hydrocarbons
University of Dayton Research Institute, Dayton, OH	Photothermal Detoxification Unit	Berry Dellinger John Graham 513-229-2846		Gaseous Waste Streams	Not Applicable	Nonspecific Volatile Organics
University of South Carolina, Columbia, SC	In Situ Mitigation of Acid Water	Frank Caruccio 803-777-4512	Roger Wilmoth 513-569-7509	Acid Mine Drainage	Metals	Not Applicable
University of Washington, Seattle, WA	Adsorptive Filtration	Mark Benjamin 206-543-7645	Norma Lewis 513-569-7665	Groundwater, Wastewater, Leachate	Metals, Other Nonspecific Inorganics	Not Applicable
UV Technologies, Inc. (formerly Energy and Environmental Engineering, Inc.),** East Cambridge, MA	PhotoCAT™ Process	James Porter John Roll 617-666-5500	Ronald Lewis 513-569-7856	Groundwater, Wastewater	Not Applicable	Various Organics
Western Product Recovery Group, Inc., Houston, TX	Coordinate, Chemical Bonding, and Adsorption Process	Donald Kelly 713-533-9321 Bert Elkins 619-749-8856	Vince Gallardo 513-569-7176	Soil, Sludge, Sediment	Heavy Metals	Nonspecific Organics
Roy F. Weston, Inc., West Chester, PA	Ambersorb® 563 Adsorbent	John Thoroughgood 610-701-3728 Deborah Plantz 215-537-4061	Ronald Turner 513-569-7775	Groundwater, Wastewater	Not Applicable	VOCs

Notes:
** Invited to participate in the SITE Demonstration Program
*** SITE Demonstration Program participant. Refer to profile in the Demonstration Program ection (Completed and Ongoing Projects) for more information.

AEA TECHNOLOGY ENVIRONMENT
(Incorporating UK National Environmental Technology Centre)
(Soil Separation and Washing Process)

TECHNOLOGY DESCRIPTION:

AEA Technology Environment (AEA) has developed an ex situ soil separation and washing process that uses mineral processing technology and hardware. The process can be used (1) as a volume reduction process to release clean soil fractions and concentrate contaminants, or (2) as a pretreatment stage in a treatment train.

Because each contaminated soil is different, AEA has developed a custom physical treatment process for soil using a three-stage process: laboratory-scale characterization, separation testing and assessment, and treatment and data analysis.

AEA is experienced in conducting pilot plant testing programs on contaminated soil and mineral ores. In addition, AEA uses computer software designed to reconcile material flow data. The results of data processing lead to recommendations for full-scale continuous flow sheets with predicted flows of solids, associated contaminant species, and water. Contaminant levels and distributions to the various products can also be estimated. Such data are required to estimate the cost and potential success of the full-scale remediation process plant. Flow sheet configuration is flexible and can be customized to address the nature and contamination of each soil or waste. A typical schematic flow sheet of the process is shown in the diagram on the previous page. The flow sheet involves screening the raw feed at 50 millimeters (mm) under powerful water jets to deagglomerate the mass. Debris greater than 50 mm in size is often decontaminated. Remaining solids and the water are passed through a drum scrubber that deagglomerates the mass further because agitation

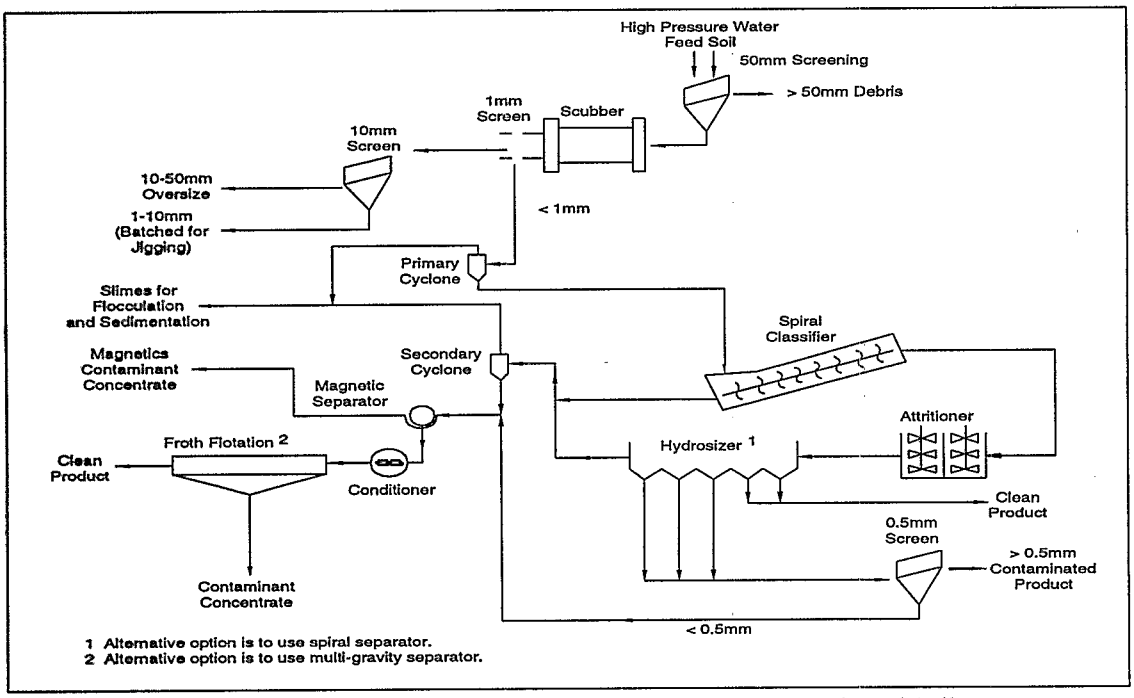

Generalized Flowsheet for the Physical Treatment of Contaminated Soil

The SITE Program assesses but does not approve or endorse technologies.

is more intense. It breaks down clay lumps and adhering material into suspension, except for surface coatings of clay and oil on fine particles. The drum scrubber discharge is screened at 1 mm, and the oversize discharge is screened at 10 mm. The 10 to 50 mm size range is often clean debris; if it is not clean then it can be crushed and refed to the system. Material from 1 to 10 mm is often contaminated and requires further treatment.

For all material less than 1 mm, the clay and water are removed by hydrocycloning. The fine product, less than 10 micrometers (m), is flocculated and thickened to recover the process water for recycling. Thickened clay product, usually containing concentrated contaminants, passes to further treatment or disposal. Sands from the hydrocycloning step are further dewatered in a classifier before the third and most intense deagglomeration operation.

An attrition scrubber removes the remaining surface contamination and degrades fine clayballs. Having completed deagglomeration, the soil is fractionated by particle size or separated by specific gravity. A second stream of particles less than 10 mm is removed by hydrocycloning and joins the primary product stream. Finer sands and silt are screened at 500 mm to yield a contaminated sand for disposal or retreatment. A 10 to 500 mm fraction can be separated magnetically, by flotation, by multigravity separation, or by a combination of these methods. These stages produce a contaminant concentrate, leaving the remaining material relatively contaminant free.

WASTE APPLICABILITY:

The soil separation and washing process is designed to remove metals, petroleum hydrocarbons, and polynuclear aromatic hydrocarbons from soil. The process may be applied to soils from gas and coke works, petrochemical plants, coal mines, iron and steel works, foundries, and nonferrous smelting, refining, and finishing sites. The process can also treat sediments, dredgings, sludges, mine tailings, and some industrial wastes.

STATUS:

The technology was accepted into the SITE Emerging Technology Program in July 1991 and completed in 1994. A Final Report was delivered to the U.S. EPA in 1994, and work done with this technology was presented the same year at the 87th Annual Meeting and Exhibition of the Air and Waste Management Association, the 20th Annual RREL Hazardous Waste Research Symposium, and the 5th Forum on Innovative Hazardous Waste Treatment Technologies: Domestic and International. Pilot trials were conducted on 30 tons of soil at a throughput rate of 0.5 ton per hour. Several test runs were performed to evaluate different flow sheet configurations. Reports on this technology can be obtained from the U.S. EPA.

FOR FURTHER INFORMATION:

EPA PROJECT MANAGER:
Mary Stinson
U.S. EPA
National Risk Management Research Laboratory
MS-104, Building 10
2890 Woodbridge Avenue
Edison, NJ 08837-3679
908-321-6683
Fax: 908-321-6640

TECHNOLOGY DEVELOPER CONTACT:
Steve Barber
Environmental Engineer
AEA Technology Environment
Culham, Abingdon
Oxfordshire OX14 3DB England
Telephone No.: 011-44-1235-463062
Fax: 011-44-1235-463010

The SITE Program assesses but does not approve or endorse technologies.

ARIZONA STATE UNIVERSITY/ ZENTOX CORPORATION

(Photocatalytic Oxidation with Air Stripping)

TECHNOLOGY DESCRIPTION:

Chlorinated volatile organic compounds (VOC), such as trichloroethene (TCE) and tetrachloroethene (PCE), are readily removed from groundwater and soil using established methods such as air stripping and vapor extraction. However, this solution produces a VOC-contaminated air stream that requires further treatment.

In gas-solid photocatalytic oxidation (PCO), the VOC-laden air stream is exposed to a titania catalyst in near-ultraviolet (UV) light. The UV light activates the catalyst, producing oxidizing radicals. The radicals promote rapid chain reactions that completely destroy VOCs to carbon dioxide and water; these oxidation reactions occur at or near room temperature. The treatment of chlorinated organics also produces hydrochloric acid.

Arizona State University (ASU) is investigating an integrated pilot-scale pump-and-treat system that transfers chlorinated VOCs to an air stream using air stripping. A PCO reactor installed downstream of the air stripping unit treats the contaminated air stream. The figure below illustrates the system. The PCO unit incorporates a flow-through photocatalytic reactor for VOC destruction and a caustic absorber bed for removal of hydrochloric acid. The acid is neutralized to sodium chloride in the absorber bed.

PCO offers the following advantages over conventional treatment technologies:

- The photocatalytic process allows VOCs to be oxidized at or near room temperature.
- Low-temperature operation allows the use of plastic piping and construction, thereby reducing costs and minimizing acid corrosion problems.
- Chemical additives are not required.

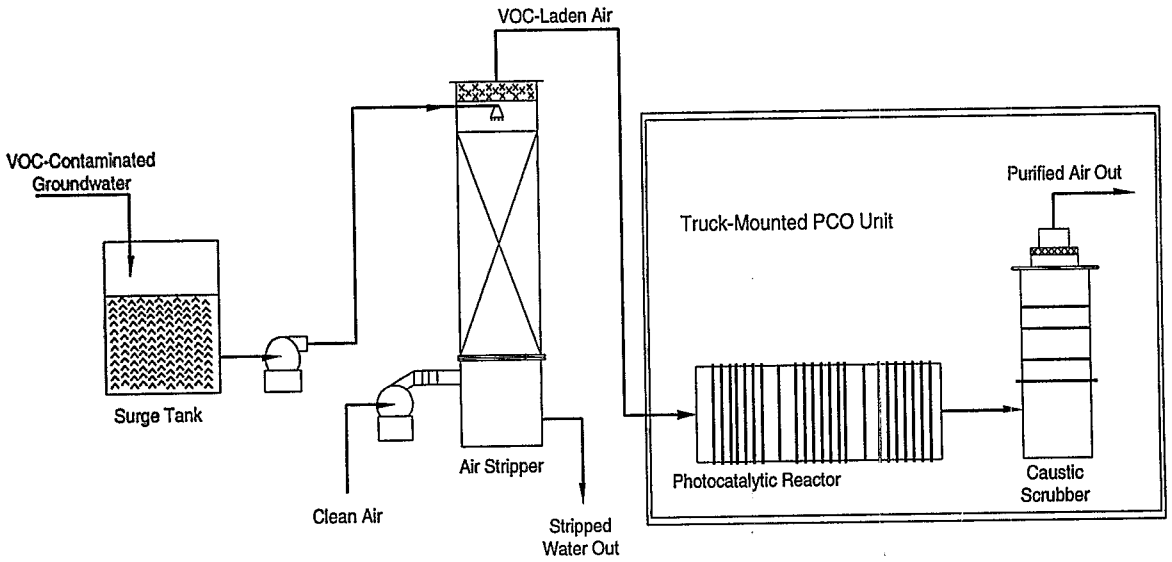

Photocatalytic Oxidation with Air Stripping

The SITE Program assesses but does not approve or endorse technologies.

- The titania catalyst and UV lamps are inexpensive and commercially available (modified catalyst formulations are available for enhanced performance).
- A variety of halogenated and nonhalogenated organic compounds can be completely oxidized to innocuous or easily neutralized products, such as carbon dioxide and hydrochloric acid.

WASTE APPLICABILITY:

This technology can treat VOC-contaminated streams generated by air stripping treatment of contaminated groundwater or soil vapor extraction of contaminated soil. The technology is appropriate for dilute VOC concentrations (such as 500 parts per million by volume or less) and low to moderate flow rates. Laboratory data indicate that the PCO technology can also be adapted for industrial facilities that emit dilute VOC-contaminated air streams. Candidates include chemical process plants, dry cleaners, painting operations, solvent cleaning operations, and wastewater and hazardous waste treatment facilities. Air in closed environments could also be purified by integrating PCO units with heating, ventilation, and air conditioning systems.

STATUS:

The PCO technology was accepted into the SITE Emerging Technology Program in 1993. Under the program, ASU has conducted bench-scale tests to evaluate the integration of a PCO unit downstream of an existing air stripping unit. Results of the bench-scale testing have provided design data for a pilot-scale test at a Phoenix, Arizona, Superfund site contaminated with chlorinated VOCs. ASU's previous laboratory studies indicate rapid destruction to nondetectable levels (98 to 99 percent removal) for various concentrations of TCE and other chlorinated ethenes in humid air streams.

In 1995, Zentox Corporation (Zentox) fielded a prototype PCO system for the treatment of TCE in air. Building on the data gained from that system, Zentox is fabricating a second generation system for use at the Phoenix site. Following tests at the Phoenix site, the 50- to 100-cubic-feet-per-minute pilot plant unit will be available for trials at other locations.

FOR FURTHER INFORMATION:

EPA PROJECT MANAGER:
Norma Lewis
U.S. EPA
National Risk Management Research Laboratory
26 West Martin Luther King Drive
Cincinnati, OH 45268
513-569-7665
Fax: 513-569-7787

TECHNOLOGY DEVELOPER CONTACTS:
Gregory Raupp
Department of Chemical, Biological, and Materials Engineering
Arizona State University
Tempe, AZ 85287-6006
602-965-2828
Fax: 602-965-0037
E-mail: Raupp@asu.edu

Elliot Berman
Zentox Corporation
2140 NE 36th Avenue
Ocala, FL 34470
352-867-7482Fax: 352-867-1320
E-mail:eberman@zentox.com

The SITE Program assesses but does not approve or endorse technologies.

ART INTERNATIONAL, INC.
(formerly ENVIRO-SCIENCES, INC.)
(Low-Energy Extraction Process)

TECHNOLOGY DESCRIPTION:

The patented Low-Energy Extraction Process (LEEP®) uses common organic solvents to concentrate and extract organic pollutants from soil, sediments, and sludges. LEEP® can treat contaminated solids to the stringent cleanup levels mandated by regulatory agencies. LEEP® includes pretreatment, washing, and concentration processes (see figure below).

During pretreatment, particles measuring up to 8 inches in diameter are removed in a gravity settler-floater. The settler-floater includes a metal detector and remover, a crusher, and a metering feeder. Floating material often found at remediation sites, such as wood chips, grass, or root material, is also removed.

After pretreatment, the solid matrix is washed in a unique, dual solvent process that uses both hydrophilic and hydrophobic solvents. The combination of these proprietary solvents guarantees efficient contaminant removal.

The extracted pollutants are then concentrated in a sacrificial solvent by liquid-liquid extraction or by distillation, before being removed from the process for off-site disposal or recycling. The treated solids can be returned to the site as clean fill.

LEEP® is a low-pressure process operated at near-ambient conditions. It is designed as a closed-loop, self-contained, mobile unit consisting of proven heavy-duty equipment. The relatively inexpensive solvents used in the process are recycled internally. The solvents are applicable to almost every type of organic contaminant, and their physical properties enhance clay and silt particle settling.

WASTE APPLICABILITY:

LEEP® can treat most organic contaminants in soil, sediment, and sludge, including tar, creosote, chlorinated hydrocarbons, polynuclear aromatic hydrocarbons, pesticides, and wood-preserving chlorophenol formulations. Bench- and pilot-scale experiments have shown that

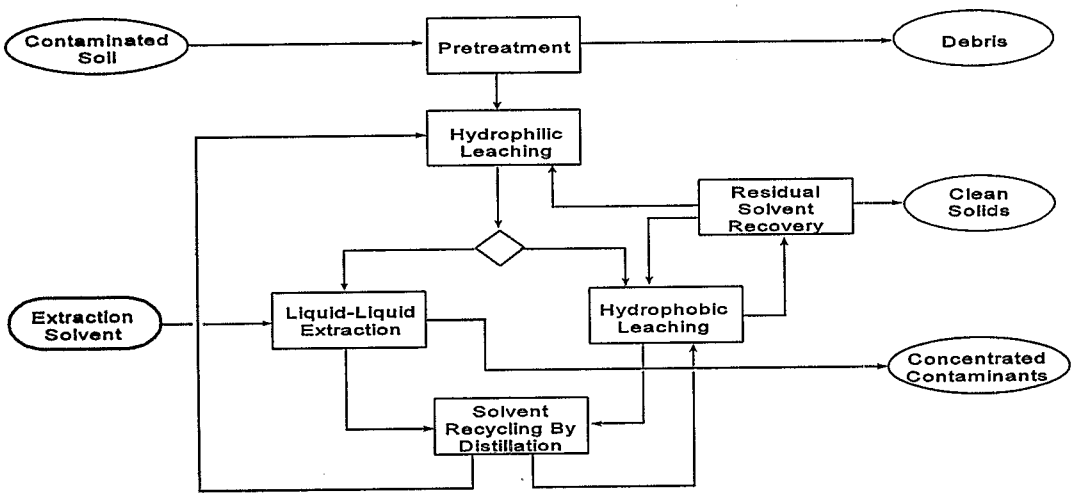

LEEP® Process Flow Diagram

The SITE Program assesses but does not approve or endorse technologies.

LEEP® effectively treats tar-contaminated solids from manufactured gas plant sites, soils and sediments contaminated with polychlorinated biphenyls and refinery waste sludges, and soils contaminated with petroleum hydrocarbons.

STATUS:

LEEP® was accepted into the Emerging Technology Program in July 1989. Bench-scale studies for process development were completed in 1994. A draft report that details the evaluation results has been submitted to EPA. The final report will be available in 1997.

In addition, ART International, Inc., routinely conducts bench-scale treatability studies for government and industrial clients, and it has obtained Toxic Substances Control Act, Resource Conservation and Recovery Act, and air permits for the technology. Other developments include the following:

- A 200-pound-per-hour pilot-scale unit has been constructed.
- Tests of the pilot-scale unit indicated that LEEP® can treat soil from manufactured gas plant sites containing up to 5 percent tar.
- Tests to scale up the pilot-scale unit to a commercial unit are complete.
- Commercial design criteria and a turnkey bid package are complete.
- Commercialization activities for a full-scale unit are underway.
- In 1994, Soil Extraction Technologies, Inc., a wholly owned subsidiary of Public Service Electric & Gas, purchased a LEEP® license.

FOR FURTHER INFORMATION:

EPA PROJECT MANAGER:
Jack Hubbard
U.S. EPA
National Risk Management Research Laboratory
26 West Martin Luther King Drive
Cincinnati, OH 46268
513-569-7507
Fax: 513-569-7620

TECHNOLOGY DEVELOPER CONTACT:
Werner Steiner
ART International, Inc.
100 Ford Road
Denville, NJ 07834
201-627-7601
Fax: 201-627-6524

The SITE Program assesses but does not approve or endorse technologies.

ATOMIC ENERGY OF CANADA, LIMITED
(Chemical Treatment and Ultrafiltration)

TECHNOLOGY DESCRIPTION:

The Atomic Energy of Canada, Limited (AECL), process uses chemical pretreatment and ultrafiltration to remove trace concentrations of dissolved metals from wastewater, contaminated groundwater, and leachate. The process selectively removes metal contaminants and produces a volume-reduced water stream for further treatment and disposal.

The installed unit's overall dimensions are 5 feet wide by 7 feet long by 6 feet high. The skid-mounted unit consists of (1) a bank of 5-micron cartridge prefilters, (2) a feed conditioning system with polyelectrolytes and chemicals for pH adjustment, (3) two banks of hollow-fiber ultrafilters, (4) a backflush system for cleaning the membrane unit, and (5) associated tanks and instrumentation.

The figure below illustrates the process. Wastewater enters the prefilter through the feed holding tank, where suspended particles are removed from the feed. The filtered waste stream is then routed to conditioning tanks where the solution pH is adjusted. Water-soluble macromolecular compounds are then added to the wastewater to form complexes with heavy metal ions. Next, a relatively high molecular weight polymer, generally a commercially available polyelectrolyte, is added to the wastewater to form selective metal-polymer complexes at the desired pH and temperature. The polyelectrolyte quantities depend on the metal ion concentration.

The wastewater then passes through a cross-flow ultrafiltration membrane system by way of a recirculation loop. The ultrafiltration system provides a total membrane surface area of 265 square feet and a flow rate of about 6 gallons per minute (gpm). The membranes retain the metal complexes (in the concentrate), while allowing uncomplexed ions to pass through the membrane with the filtered water. The filtered water (the permeate) is continuously withdrawn, while the concentrate stream containing most of the contaminants is recycled until it meets the target concentration. After reaching the target concentration, the concentrate stream is withdrawn for further treatment, such as solidification. It can then be safely disposed of, while the clean filtered water is discharged.

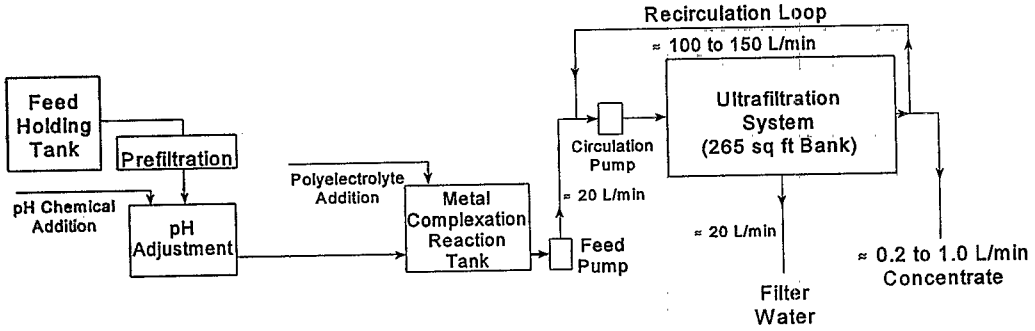

Single-Stage Chemical Treatment and Ultrafiltration Process

The SITE Program assesses but does not approve or endorse technologies.

WASTE APPLICABILITY:

The AECL process treats groundwater, leachate, and surface runoff contaminated with trace levels of toxic heavy metals. The process also treats effluents from (1) industrial processes, (2) production and processing of base metals, (3) smelters, (4) electrolysis operations, and (5) battery manufacturing. Potential applications include removal of metals such as cadmium, lead, mercury, uranium, manganese, nickel, chromium, and silver.

The process can treat influent with dissolved metal concentrations from several parts per million (ppm) up to about 100 ppm. The process also removes other inorganic and organic materials present as suspended or colloidal solids. The sole residue is the ultrafiltration concentrate, which generally constitutes 5 to 20 percent of the feed volume.

STATUS:

The AECL process was accepted into the SITE Emerging Technology Program in 1988. During initial bench- and pilot-scale tests, the AECL process successfully removed cadmium, lead, and mercury. These results were used to help designers construct the mobile unit.

The mobile unit has been tested at Chalk River Laboratories and at a uranium mine tailings site in Ontario, Canada. The field evaluation indicated that process water characteristics needed further study; pretreatment schemes are being evaluated. The mobile unit, which is capable of treating influent flows ranging from 1,000 to 5,000 gallons per day, is available for treatability tests and on-site applications. An Emerging Technology Bulletin (EPA/540/F-92/002) is available from EPA.

FOR FURTHER INFORMATION:

EPA PROJECT MANAGER:
John Martin
U.S. EPA
National Risk Management Research Laboratory
26 West Martin Luther King Drive
Cincinnati, OH 45268
513-569-7758
Fax: 513-569-7620

TECHNOLOGY DEVELOPER CONTACTS:
Leo Buckley or Les Moschuk
Atomic Energy of Canada, Limited
Waste Processing Technology
Chalk River Laboratories
Chalk River, Ontario, Canada K0J 1J0
613-584-3311
Fax: 613-584-8107

The SITE Program assesses but does not approve or endorse technologies.

ATOMIC ENERGY OF CANADA LIMITED
(Ultrasonic-Aided Leachate Treatment)

TECHNOLOGY DESCRIPTION:

The ultrasonic-aided leachate treatment process involves enhanced chemical treatment of acidic soil leachate solutions. These solutions, also known as acid mine drainage, are caused by the oxidation and dissolution of sulfide-bearing wastes that produce sulfuric acid. The resulting acidic water leaches metal contaminants from the exposed waste rock and mine tailings, creating large volumes of toxic acidic leachates.

The ultrasonic-aided leachate treatment process uses an ultrasonic field to improve contaminant removal through precipitation, coprecipitation, oxidation, ion scavenging, and sorption (see figure below). These processes are followed by solid-liquid separation using a filter press and a cross-flow microfilter connected in series. The time required for treatment depends on (1) the nature of acidic waste to be treated, (2) the treated water quality with respect to contaminant concentration, and (3) the rate at which the physical and chemical processes occur. The treatable leachate volume is scalable.

The major difference between this technology and conventional processes is the use of ultrasonic mixing instead of mechanical agitation in large tanks. Research indicates that an ultrasonic field significantly increases both the conversion rate of dissolved contaminants to precipitates and the rate of oxidation and ion exchange. Earlier studies by Atomic Energy of Canada Limited (AECL) revealed that the time required to precipitate heavy metals from aqueous solutions decreased by an order of magnitude in the presence of an ultrasonic field.

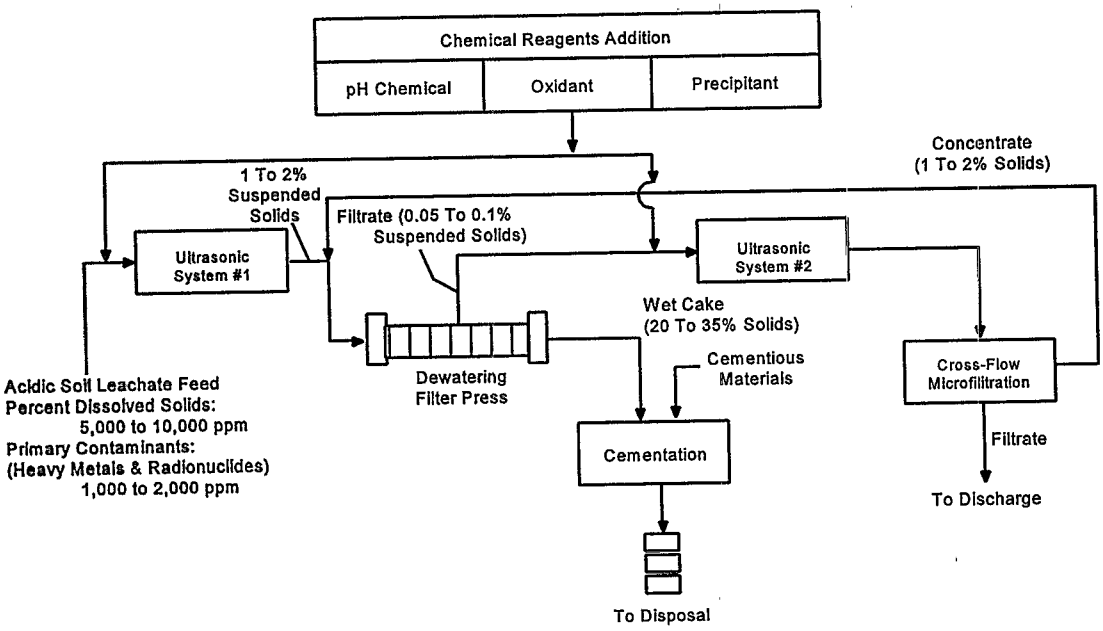

Single-Stage Chemical Treatment and Ultrafiltration Process

The SITE Program assesses but does not approve or endorse technologies.

The ultrasonic-aided leachate treatment process is compact, portable, and energy-efficient. Safety and process controls are built in as necessary for handling mixed radioactive solutions. The process also generates minimal fugitive emissions and produces a treated effluent that meets applicable discharge limits. The process may also be able to treat waste containing small amounts of dissolved or suspended organics.

WASTE APPLICABILITY:

The ultrasonic-aided leachate treatment process treats acid mine drainage contaminated with heavy metals and radionuclides. The process can also be combined with soil remediation technologies.

STATUS:

The ultrasonic-aided leachate treatment process was accepted into the SITE Emerging Technology Program in 1993. Under this program, AECL is developing and testing a pilot-scale unit to treat acidic soil leachate solutions containing low levels of metals and radionuclides.

The quality assurance and test plan was approved in October 1994. Laboratory-scale testing using acidic leachates from the Berkeley Pit in Butte, Montana, and from Stanleigh Mines in Elliot Lake, Ontario, Canada, is complete. The tests were designed to find optimal single and multistage treatment regimes to remove from the leachates a variety of dissolved species (such as iron, aluminum, manganese, magnesium, copper, zinc, uranium, radium, and sulfate), either as contaminants or as reusable resources.

Given optimum process chemistry, low energy (less than 5 kilojoules per liter), and low frequency (20 kilohertz), ultrasonic cavitation fields were sufficient to remove the dissolved species to levels meeting discharge requirements.

The energy input corresponds to a chemical conditioning time of a few seconds to tens of seconds. The underlying principles examined include lime and limestone precipitation, copper cementation, iron, and uranium oxidation, ion sorption, and ion scavenging.

A Phase 1 interim report summarizing the laboratory-scale results was issued in August 1995. A revised Phase 1 report was issued in February 1996. Testing of the pilot-scale system was December 1996.

FOR FURTHER INFORMATION:

EPA PROJECT MANAGER:
Randy Parker
U.S. EPA
National Risk Management Research Laboratory
26 West Martin Luther King Drive
Cincinnati, OH 45268
513-569-7271
Fax: 513-569-7676

TECHNOLOGY DEVELOPER CONTACT:
Shaun Cotnam and Dr. Shiv Vijayan
Atomic Energy of Canada, Limited
Chalk River Laboratories
Chalk River, Ontario, Canada K0J 1J0
613-584-3311, ext. 3220/6057
Fax: 613-584-1812

The SITE Program assesses but does not approve or endorse technologies.

BATTELLE MEMORIAL INSTITUTE
(In Situ Electroacoustic Soil Decontamination)

TECHNOLOGY DESCRIPTION:

This patented in situ electroacoustic soil decontamination (ESD) technology removes heavy metals from soils through direct current electrical and acoustic fields. Direct current facilitates liquid transport through soils. The technology consists of electrodes, an anode and a cathode, and an acoustic source (see figure below).

The double-layer boundary theory is important when an electric potential is applied to soils. For soil particles, the double layer consists of (1) a fixed layer of negative ions that are firmly held to the solid phase, and (2) a diffuse layer of more loosely held cations and anions. Applying an electric potential to the double layer displaces the loosely held ions to their respective electrodes. The cations take water with them as they move toward the cathode.

Besides water transport through wet soils, the direct current produces other effects, such as ion transfer, pH gradients development, electrolysis, oxidation and reduction, and heat generation. Heavy metals present in contaminated soils can be leached or precipitated out of solution by electrolysis, oxidation and reduction reactions, or ionic migration. The soil contaminants may be (1) cations, such as cadmium, chromium, and lead; or (2) anions, such as cyanide, chromate, and dichromate. The existence of these ions in their respective oxidation states depends on soil pH and concentration gradients. Direct current is expected to increase the leaching rate and precipitate the heavy metals out of solution by establishing appropriate pH and osmotic gradients.

WASTE APPLICABILITY:

This technology removes heavy metals from soils. When applied in conjunction with an electric field and water flow, an acoustic field can enhance waste dewatering or leaching. This phenomenon is not fully understood. Another possible application involves the unclogging of recovery wells. Because contaminated particles are driven to the recovery well, the pores and interstitial spaces in the soil can close. This technology could be used to clear these clogged spaces.

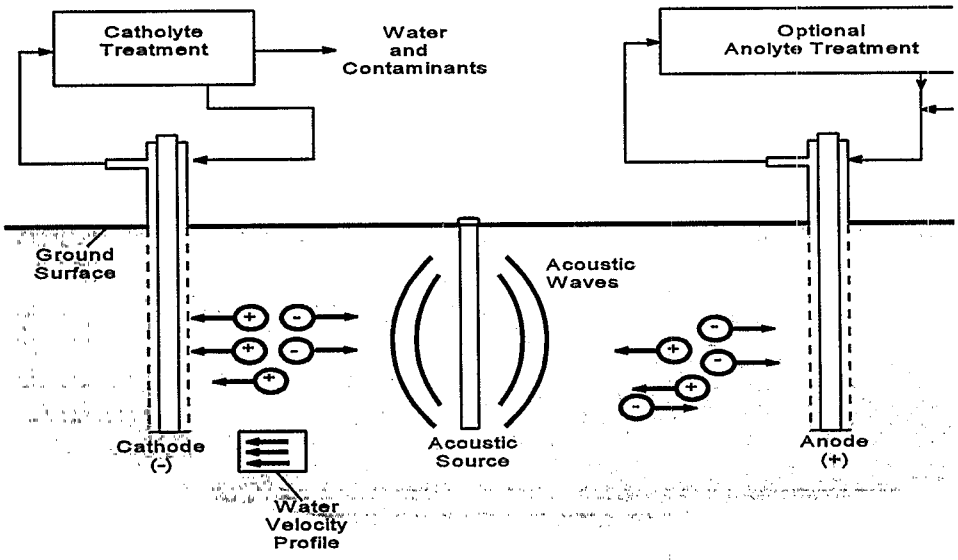

In Situ Electroacoustic Soil Decontamination

The SITE Program assesses but does not approve or endorse technologies.

The technology's potential for improving nonaqueous phase liquid contaminant recovery and in situ removal of heavy metals needs to be tested at the pilot-scale level using clay soils.

STATUS:

The ESD technology was accepted into the SITE Emerging Technology Program in 1988. Results indicate that ESD is technically feasible for removing inorganic species such as zinc and cadmium from clay soils; however, it is only marginally effective for hydrocarbon removal. A modified ESD process for more effective hydrocarbon removal has been developed but has not been tested. The Emerging Technology Report (EPA/540/5-90/004) describing the 1-year investigation can be purchased through the National Technical Information Service, (PB 90-204728/AS). The Emerging Technology Summary (EPA/540/S5-90/004) is available from U. S. EPA.

FOR FURTHER INFORMATION:

EPA PROJECT MANAGER:
Randy Parker
U.S. EPA
National Risk Management Research Laboratory
26 West Martin Luther King Drive
Cincinnati, OH 45268
513-569-7271
Fax: 513-569-7571

TECHNOLOGY DEVELOPER CONTACT:
Satya Chauhan
Battelle Memorial Institute
505 King Avenue
Columbus, OH 43201
614-424-4812
Fax: 614-424-3321

The SITE Program assesses but does not approve or endorse technologies.

BIOTROL®
(Methanotrophic Bioreactor System)

TECHNOLOGY DESCRIPTION:

The BioTrol methanotrophic bioreactor system is an aboveground remedial technology for water contaminated with halogenated hydrocarbons. Trichloroethene (TCE) and related compounds pose a difficult challenge to biological treatment. Unlike aromatic hydrocarbons, for example, TCE cannot serve as a primary substrate for bacterial growth. Degradation depends on cometabolism (see figure below), which is attributed to the broad substrate specificity of certain bacterial enzyme systems. Although many aerobic enzyme systems reportedly cooxidize TCE and related compounds, BioTrol claims that the methane monooxygenase (MMO) produced by methanotrophic bacteria is the most promising.

Methanotrophs are bacteria that can use methane as a sole source of carbon and energy. Although certain methanotrophs can express MMO in either a soluble or particulate (membrane-bound) form, BioTrol has discovered that the soluble form used in the BioTrol process induces extremely rapid TCE degradation rates. Two patents have been obtained, and an additional patent on the process is pending. Results from experiments with *Methylosinus trichosporium* strain OB3b indicate that the maximum specific TCE degradation rate is 1.3 grams of TCE per gram of cells (dry weight) per hour. This rate is 100 to 1,000 times faster than reported TCE degradation rates for nonmethanotrophs. This species of methanotrophic bacteria reportedly removes various chlorinated aliphatic compounds by more than 99.9 percent.

BioTrol has also developed a colorimetric assay that verifies the presence of MMO in the bioreactor culture.

WASTE APPLICABILITY:

The bioreactor system can treat water contaminated with halogenated aliphatic hydrocarbons, including TCE, dichloroethene isomers, vinyl chloride, chloroform, dichloromethane (methylene chloride), and others. In the case of groundwater treatment,

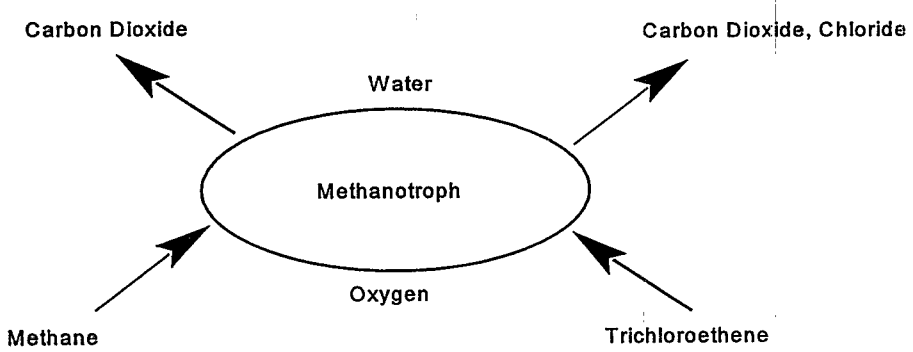

Cometabolism of TCE

The SITE Program assesses but does not approve or endorse technologies.

bioreactor effluent can either be reinjected or discharged to a sanitary sewer under a National Pollutant Discharge Elimination System permit.

STATUS:

This technology was accepted into the SITE Emerging Technology Program in July 1990. Bench- and pilot-scale tests were conducted using a continuous-flow, dispersed-growth system. As shown in the figure below, the pilot-scale reactor displayed first-order TCE degradation kinetics. The final report on the demonstration appears in the *Journal of the Air and Waste Management Association*, Volume 45, No. 1, January 1995. The Emerging Technology Bulletin (EPA/540/F-93/506) and the Emerging Technology Summary (EPA/540/SR-93/505) are available from U. S. EPA.

FOR FURTHER INFORMATION:

EPA PROJECT MANAGER:
David Smith
U.S. EPA
Region 8
999 18th Street
Denver, CO 80202
303-293-1475
Fax: 303-294-1198

TECHNOLOGY DEVELOPER CONTACT:
Durell Dobbins
BioTrol®
10300 Valley View Road, Suite 107
Eden Prairie, MN 55344-3546
612-942-8032
Fax: 612-942-8526

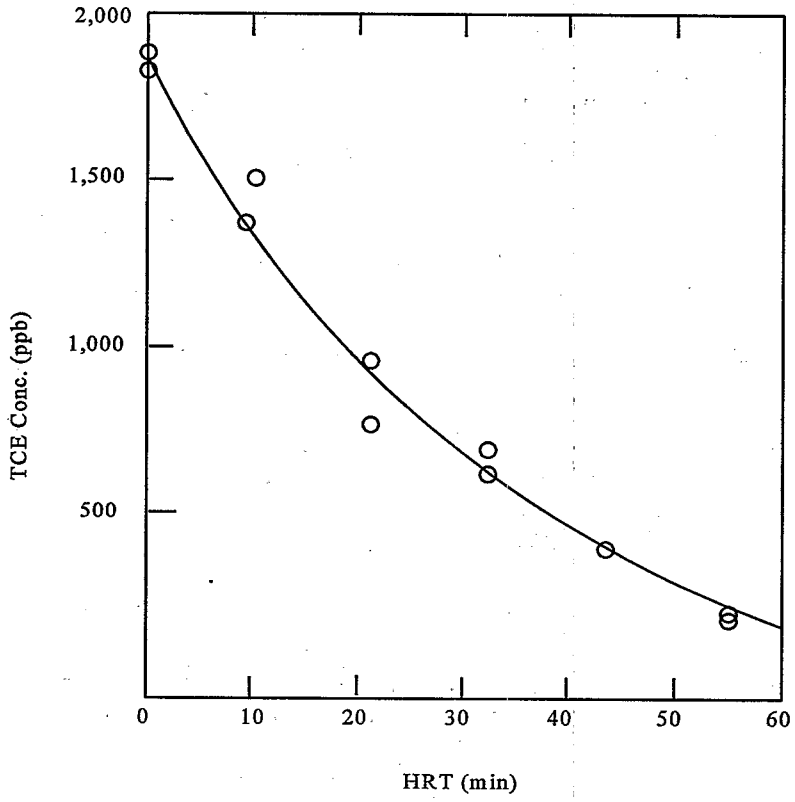

Results for Pilot-Scale, Continuous-Flow Reactor

The SITE Program assesses but does not approve or endorse technologies.

CENTER FOR HAZARDOUS MATERIALS RESEARCH
(Acid Extraction Treatment System)

TECHNOLOGY DESCRIPTION:

The acid extraction treatment system (AETS) uses hydrochloric acid to extract heavy metal contaminants from soils. Following treatment, the clean soil may be returned to the site or used as fill.

A simplified block flow diagram of the AETS is shown below. First, soils are screened to remove coarse solids. These solids, typically greater than 4 millimeters in size, are relatively clean and require at most a simple rinse with water or detergent to remove smaller attached particles.

After coarse particle removal, the remaining soil is scrubbed in an attrition scrubber to break up agglomerates and cleanse surfaces. Hydrochloric acid is then introduced into the soil in the extraction unit. The residence time in the unit varies depending on the soil type, contaminants, and contaminant concentrations, but generally ranges between 10 and 40 minutes. The soil-extractant mixture is continuously pumped out of the mixing tank, and the soil and extractant are separated using hydrocyclones.

When extraction is complete, the solids are transferred to the rinse system. The soils are rinsed with water to remove entrained acid and metals. The extraction solution and rinse waters are regenerated using a proprietary technology that removes the metals and reforms the acid. The heavy metals are concentrated in a form potentially suitable for recovery. During the final step, the soils are mixed with lime and fertilizer to neutralize any residual acid. No wastewater streams are generated by the process.

WASTE APPLICABILITY:

The main application of AETS is extraction of heavy metals from soils. The system has been tested using a variety of soils containing one or more of the following: arsenic, cadmium, chromium, copper, lead, nickel, and zinc. The treatment capacity is expected to range up to 30 tons per hour. AETS can treat all soil fractions, including fines.

The major residuals from AETS treatment include the cleaned soil, which is suitable for fill or for return to the site, and the heavy metal concentrate. Depending on the concentration of heavy metals, the mixtures of heavy metals found at the site, and the presence of other compounds (calcium, sodium) with the metals, heavy metals may be reclaimed from the concentrate.

STATUS:

Under the Emerging Technology Program, laboratory-scale and bench-scale tests were conducted to develop the AETS technology. The bench-scale pilot system was constructed to process between 20 and 100 kilograms of soil per hour. Five soils were tested, including an EPA synthetic soil matrix (SSM) and soils from four Superfund sites, including NL Industries in Pedricktown, New Jersey; King of Prussia site in Winslow Township, New Jersey; a smelter site in Butte, Montana; and Palmerton Zinc site in

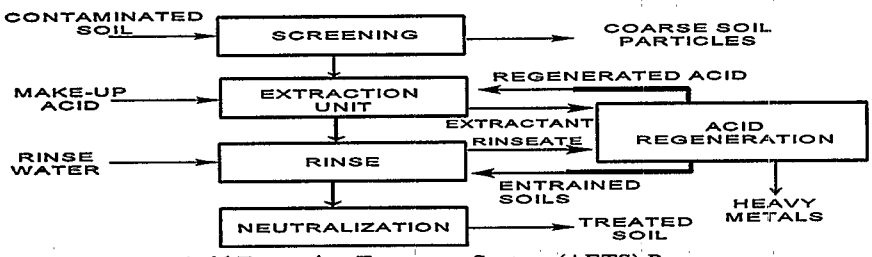

Acid Extraction Treatment System (AETS) Process

The SITE Program assesses but does not approve or endorse technologies.

Palmerton, Pennsylvania. These soils contained elevated concentrations of some or all of the following: arsenic, cadmium, chromium, copper, lead, nickel, and zinc. The table below summarizes soil treatability results based on the EPA Resource Conservation and Recovery Act (RCRA) hazardous waste requirements for toxicity characteristic leaching procedure (TCLP) and the California standards for total metal concentrations. The Emerging Technology Report (EPA/540/R-94/513) and Emerging Technology Summary (EPA/540/SR-94/513) are available from EPA.

The results of the study are summarized below:

- AETS can treat a wide range of soils containing a wide range of heavy metals to reduce the TCLP below the RCRA limit. AETS can also reduce the total metals concentrations below the California-mandated total metals limitations.
- In most cases, AETS can treat the entire soil, without separate stabilization and disposal for fines or clay particles, to the required TCLP and total metal limits. The only exception was the SSM, which may require separate stabilization and disposal of 20 percent of the soil to reduce the total TCLP lead concentrations appropriately. However, AETS successfully treated arsenic, cadmium, chromium, copper, nickel, and zinc in the soil.
- Treatment costs under expected process conditions range from $100 to $180 per cubic yard of soil, depending on the site size, soil types, and contaminant concentrations. Operating costs ranged from $50 to $80 per cubic yard.

FOR FURTHER INFORMATION:

EPA PROJECT MANAGER:
George Moore
U.S. EPA
National Risk Management Research Laboratory
26 West Martin Luther King Drive
Cincinnati, OH 45268
513-569-7991
Fax: 513-569-7276

TECHNOLOGY DEVELOPER CONTACT:
Stephen Paff
Center for Hazardous Materials Research
320 William Pitt Way
Pittsburgh, PA 15238
412-826-5321, ext. 233
Fax: 412-826-5552

	Soil				
Metal	SSM	Butte	King of Prussia	Pedricktown	Palmerton
As	*,T,L	*,T,L			
Cd	*,T				*,T,L
Cr	*,T,L		***,T,L**	*,T,L	
Cu	***,T,L**	*,T,L	*,T,L		*,T,L
Ni	*,T,L		*,T,L		
Pb	*	*,T,L		***,T,L**	*,T,L
Zn	***,T,L**	*,T,L		*,T,L	*,T,L

Key: * -- Metal is present in that soil
T -- Successful treatment for total metals
L -- Reduction in leachability to below standards

Boldface and larger font indicates high initial metals concentration (at least double the regulatory standards)

CENTER FOR HAZARDOUS MATERIALS RESEARCH
(Organics Destruction and Metals Stabilization)

TECHNOLOGY DESCRIPTION:

This technology is designed to destroy hazardous organics in soils while simultaneously stabilizing metals and metal ions (see figure below). The technology causes contaminated liquids, soils, and sludges to react with elemental sulfur at elevated temperatures. All organic compounds react with sulfur. Hydrocarbons are converted to an inert carbon-sulfur powdered residue and hydrogen sulfide gas; treated chlorinated hydrocarbons also produce hydrochloric acid gas. These acid gases are recovered from the off-gases. The hydrogen sulfide is oxidized in a conventional acid gas treating unit (such as ARI Technologies LO-CAT™), recovering the sulfur for reuse.

In addition to destroying organic compounds, the technology converts heavy metals to sulfides, which are rendered less leachable. If required, the sulfides can be further stabilized before

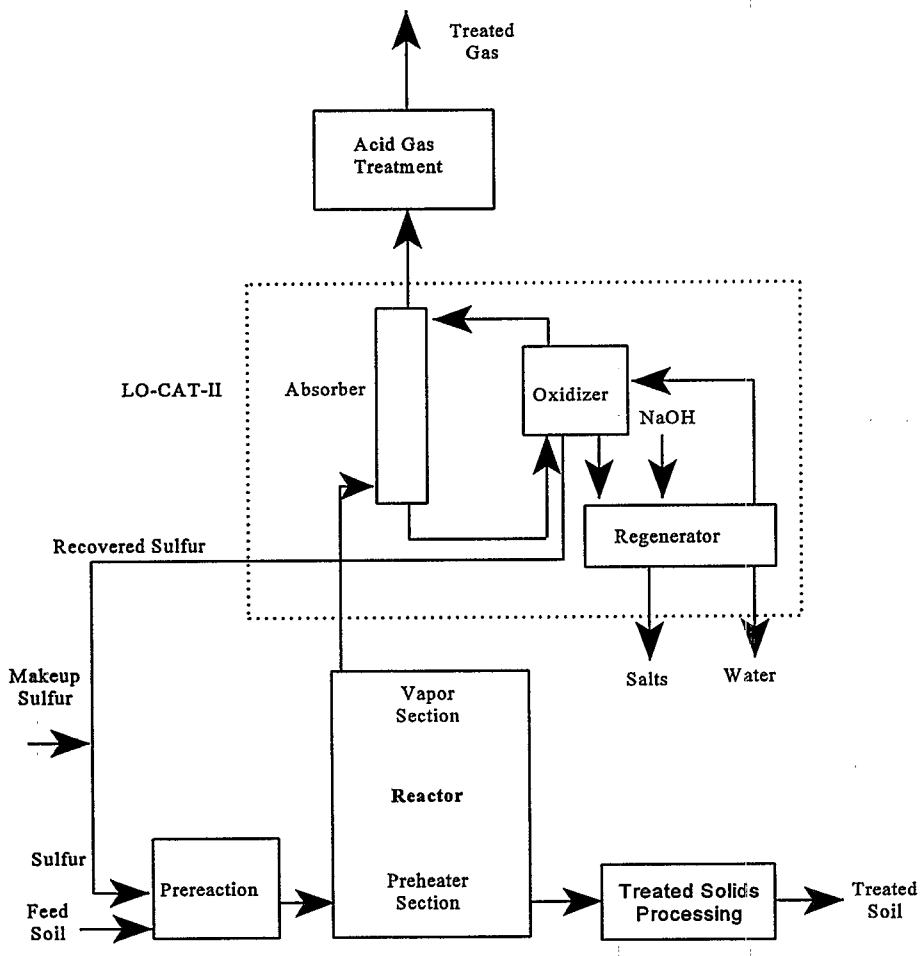

Organics Destruction and Metals Stabilization

The SITE Program assesses but does not approve or endorse technologies.

disposal. Thus, heavy metals can be stabilized in the same process step as the organics destruction. The technology's main process components consist of the following:

- A prereaction mixer where the solid and reagent are mixed
- An indirectly heated, enclosed reactor that includes a preheater section to drive off water, and two integrated reactor sections to react liquid sulfur with the solids and further react desorbed organic compounds with vapor-phase sulfur
- An acid gas treatment system that removes the acid gases and recovers sulfur by oxidizing the hydrogen sulfide
- A treated solids processing unit that recovers excess reagent and prepares the treated product to comply with on-site disposal requirements

Initial pilot-scale testing of the technology has demonstrated that organic contaminants can be destroyed in the vapor phase with elemental sulfur. Tetrachloroethene, trichloroethene, and polychlorinated biphenyls were among the organic compounds destroyed.

Batch treatability tests of contaminated soil mixtures have demonstrated organics destruction and immobilization of various heavy metals. Immobilization of heavy metals is determined by the concentration of the metals in leachate compared to EPA toxicity characteristic leaching procedure (TCLP) regulatory limits. Following treatment, cadmium, copper, lead, nickel, and zinc were significantly reduced compared to TCLP values. In treatability tests with approximately 700 parts per million of Aroclor 1260, destruction levels of 99.0 to 99.95 percent were achieved. Destruction of a pesticide, malathion, was also demonstrated. The process was also demonstrated to be effective on soil from manufactured gas plants, containing a wide range of polynuclear aromatics.

The current tests are providing a more detailed definition of the process limits, metal concentrations, and soil types required for stabilization of various heavy metals to meet the limits specified by TCLP. In addition, several process enhancements are being evaluated to expand the range of applicability.

WASTE APPLICABILITY:

The technology is applicable to soils and sediments contaminated with both organics and heavy metals.

STATUS:

This technology was accepted into the SITE Emerging Technology Program in January 1993. Bench-scale testing in batch reactors was completed in 1993. The pilot-scale program was directed at integrating the process concepts and obtaining process data in a continuous unit. The program was completed in 1995 and the Emerging Technology Report will be available in 1997.

FOR FURTHER INFORMATION:

EPA PROJECT MANAGER:
Randy Parker
U.S. EPA
National Risk Management Research Laboratory
26 West Martin Luther King Drive
Cincinnati, OH 45268
513-569-7271
Fax: 513-569-7571

TECHNOLOGY DEVELOPER CONTACT:
Stephen Paff
Center for Hazardous Materials Research
320 William Pitt Way
Pittsburgh, PA 15238
412-826-5321, ext. 233
Fax: 412-826-5552

The SITE Program assesses but does not approve or endorse technologies.

COGNIS, INC.
(Biological/Chemical Treatment)

TECHNOLOGY DESCRIPTION:

The COGNIS, Inc. biological/chemical treatment is a two-stage process that treats soils, sediments, and other media contaminated with metals and organics. Metals are first removed from the contaminated matrix by a chemical leaching process. Organics are then removed by bioremediation.

Although metals removal usually occurs in the first stage, bioremediation may be performed first if organic contamination levels are found to inhibit the metals extraction process. Bioremediation is more effective if the metal concentrations in the soil are sufficiently low so as not to inhibit microbial activity. However, even in the presence of inhibitory metal concentrations, a microbe population may be enriched to perform the necessary bioremediation.

Soil handling requirements for both stages are similar, so unit operations are fully reversible.

The final treatment products are a recovered metal or metal salt, biodegraded organic compounds, and clean soil. Contaminated soil is first exposed to a leachant solution and classified by particle size (see figure below). Size classification allows oversized rock, gravel, and sand to be quickly cleaned and separated from the sediment fines (such as silt, clay, and humus), which require longer leaching times. Typically, organic pollutants are also attached to the fines.

After dissolution of the metal compounds, metal ions such as zinc, lead, and cadmium are removed from the aqueous leachate by liquid ion exchange, resin ion exchange, or reduction. At this point, the aqueous leaching solution is freed of metals and can be reused to leach additional metal from the contaminated soil. If an extraction agent is used, it is later stripped of the bound metal and the agent is fully regenerated and recycled. Heavy metals are recovered in a saleable, concentrated form as solid metal or a metal salt. The method of metals recovery

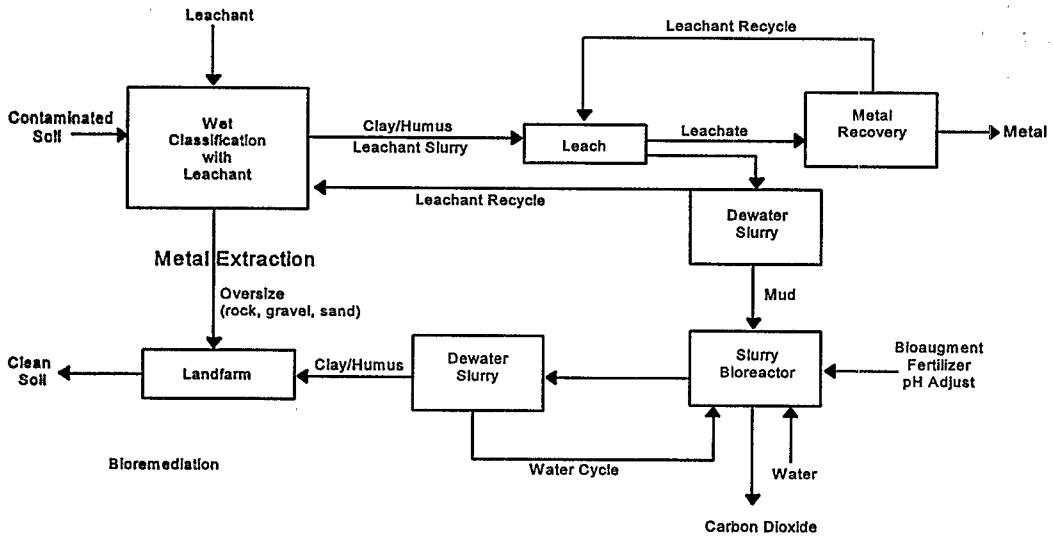

Metal Leaching and Bioremediation Process

The SITE Program assesses but does not approve or endorse technologies.

depends on the metals present and their concentrations.

After metals extraction is complete, the "mud" slurry settles and is neutralized. Liquids are returned to the classifier, and the partially treated soil is transferred to a slurry bioreactor, a slurry-phase treatment lagoon, or a closed land treatment cell for bioremediation. The soil and the residual leachate solution are treated to maximize contaminant biodegradation. Nutrients are added to support microbial growth, and the most readily biodegradable organic compounds are aerobically degraded.

Bench-scale tests indicate that this process can remediate a variety of heavy metals and organic pollutants. The combined process is less expensive than separate metals removal and organic remediation.

WASTE APPLICABILITY:

This remediation process is intended to treat combined-waste soils contaminated by heavy metals and organic compounds. The process can treat contaminants including lead, cadmium, zinc, and copper, as well as petroleum hydrocarbons and polynuclear aromatic hydrocarbons that are subject to aerobic microbial degradation. The combined process can also be modified to extract mercury and other metals, and to degrade more recalcitrant halogenated hydrocarbons.

STATUS:

This remediation process was accepted into the SITE Emerging Technology Program in August 1992. Bench- and pilot-scale testing of the bioremediation process is complete. A full-scale field test of the metals extraction process was completed under the Demonstration Program. For further information on the full-scale process, refer to the profile in the Demonstration Program section.

This remediation process is no longer available through COGNIS, Inc. For further information about the process, contact the EPA Project Manager.

FOR FURTHER INFORMATION:

EPA PROJECT MANAGER:
Steven Rock
U.S. EPA
National Risk Management Research Laboratory
26 West Martin Luther King Drive
Cincinnati, OH 45208
513-569-7149
Fax: 513-569-7105

The SITE Program assesses but does not approve or endorse technologies.

CONCURRENT TECHNOLOGIES
(Formerly Center for Hazardous Materials Research)
(Smelting Lead-Containing Waste)

TECHNOLOGY DESCRIPTION:

Secondary lead smelting is a proven technology that reclaims lead from lead-acid battery waste sites. The Concurrent Technologies and Exide Corporation (Exide) have demonstrated the use of secondary lead smelting to reclaim usable lead from various types of waste materials from Superfund and other lead-containing sites. Reclamation of lead is based on existing lead smelting procedures and basic pyrometallurgy.

The figure below is a generalized process flow diagram. Waste material is first excavated from Superfund sites or collected from other sources. The waste is then preprocessed to reduce particle size and to remove rocks, soil, and other debris. Next, the waste is transported to the smelter.

At the smelter, waste is fed to reverberatory or blast furnaces, depending on particle size or lead content. The two reverberatory furnaces normally treat lead from waste lead-acid batteries, as well as other lead-containing material. The furnaces are periodically tapped to remove slag, which contains 60 to 70 percent lead, and a soft pure lead product.

The two blast furnaces treat slag generated from the reverberatory furnaces, as well as larger-sized lead-containing waste. These furnaces aretapped continuously for lead and tapped intermittently to remove slag, which is transported offsite for disposal. The reverberatory and blast furnace combination at Exide can reclaim lead from batteries and waste with greater than 99 percent efficiency.

WASTE APPLICABILITY:

The process has been demonstrated to reclaim lead from a variety of solid materials, including rubber battery case material, lead dross, iron shot abrasive blasting material, and wood from demolition of houses coated with lead paint. The technology is applicable to solid wastes containing more than 2 percent lead, provided that they do not contain excessive amounts of calcium, silica, aluminum, or other similar constituents. Explosive and flammable liquids cannot be processed in the furnace. As tested, this technology is not applicable to soil remediation.

STATUS:

This technology was accepted into the SITE Emerging Technology Program in July 1991. Field work for the project was completed in February 1993.

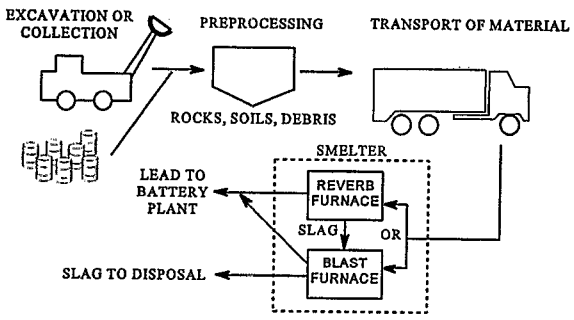

Smelting Lead-Containing Waste Process

The SITE Program assesses but does not approve or endorse technologies.

The process was tested at three Superfund sites. Materials obtained from two additional sites were also used for these tests. Results from the Emerging Technology Program, presented in the table below, show that the process is applicable to waste materials at each site and economically feasible for all but demolition material. The Emerging Technology Bulletin (EPA/540/F-94/510), the Emerging Technology Summary (EPA/540/SR-95/504), and the Emerging Technology Report (EPA/540/R-95/504) are available from EPA. An article about the technology was also published by the *Journal of Hazardous Materials* in February 1995.

Specific technical problems encountered included (1) loss of furnace production due to material buildup within the furnaces, (2) breakdowns in the feed system due to mechanical overloads, and (3) increased oxygen demands inside the furnaces. All of these problems were solved by adjusting material feed rates or furnace parameters. Based on these tests, Concurrent Technologies has concluded that secondary lead smelting is an economical method of reclaiming lead from lead-containing waste material collected at Superfund sites and other sources.

FOR FURTHER INFORMATION:

EPA PROJECT MANAGER:
Laurel Staley
U.S. EPA
National Risk Management Research Laboratory
26 West Martin Luther King Drive
Cincinnati, OH 45268
513-569-7863
Fax: 513-569-7105

TECHNOLOGY DEVELOPER CONTACT:
Brian Bosilovich
Concurrent Technologies Corporation
320 William Pitt Way
Pittsburgh, PA 15238
412-826-5321, ext. 230
Fax: 412-826-5552

Source of Material/ Type of Material Tested	% Lead	Economical*	Test Results
Tonolli Superfund site (PA)/ Battery cases	3 to 7	Yes	Lead can be reclaimed in secondary lead smelter; incorporated into regular blast furnace feed stock.
Hebalka Superfund site (PA)/ Battery cases	10	Yes	Lead can be reclaimed in secondary lead smelter; reduced in size and incorporated into regular reverberatory furnace feed stock.
Pedricktown Superfund site (NJ)/ Battery cases; lead dross, residue, and debris	45	Yes	Lead can be reclaimed in secondary lead smelter; screened and incorporated into regular reverberatory and blast furnace feed stocks.
Laurel House Women's Shelter (PA)/ Demolition material contaminated with lead-based paint.	1	No	Lead can be reclaimed in secondary lead smelter; however, the cost of processing the material was estimated to be very high.
PennDOT/ Abrasive bridge blasting material	3 to 5	Yes	Lead can be reclaimed in secondary lead smelter; incorporated into regular blast furnace feed stock.

* Compared to stabilization or landfilling

Results from Field Tests of the Smelting Lead-Containing Waste Technology

The SITE Program assesses but does not approve or endorse technologies.

ENERGIA, INC.
(Reductive Photo-Dechlorination Treatment)

TECHNOLOGY DESCRIPTION:

The Reductive Photo-Dechlorination (RPD) treatment uses ultraviolet (UV) light in a reducing atmosphere and at moderate temperatures to treat waste streams containing chlorinated hydrocarbons (CIHC). Because CIHCs are destroyed in a reducing environment, the only products are hydrocarbons and hydrogen chloride (HCl).

The RPD process is depicted in the figure below. The process consists of five main units: (1) input/mixer (2) photo-thermal chamber (3) HCl scrubber (4) separator and (5) products storage and recycling. Chlorinated wastes may be introduced into the process in one of three ways: vapor, liquid, or bound to an adsorbent, such as activated carbon.

Air laden with chlorocarbon vapors is first passed through a condenser, which removes chlorinated materials as liquids. Chlorocarbon liquids are fed into a vaporizer, mixed with a reducing gas, and passed into the photo-thermal chamber. Chlorinated contaminants adsorbed onto activated carbon are purged with reducing gas and mildly heated to induce vaporization. The ensuing vapors are then fed into the photo-thermal chamber.

The photo-thermal chamber is the heart of the RPD process because all reactions central to the process occur in this chamber. Saturated, olefinic, or aromatic chlorocarbons with one or more carbon-chlorine bonds are exposed to UV light, heat, and a reducing atmosphere, such as hydrogen gas or methane. According to ENERGIA, Inc., carbon-chlorine bonds are broken, resulting in chain-propagating hydrocarbon reactions. Chlorine atoms are eventually stabilized as HCl, which is easily removed in a scrubber. Hydrocarbons may hold their original structures, rearrange, cleave, couple, or go through additional hydrogenation. Hydrocarbons produced from the dechlorination of wastes include ethane, acetylene, ethene, and methane. Valuable hydrocarbon products can be stored, sold, or recycled as auxiliary fuel to heat the photo-thermal chamber.

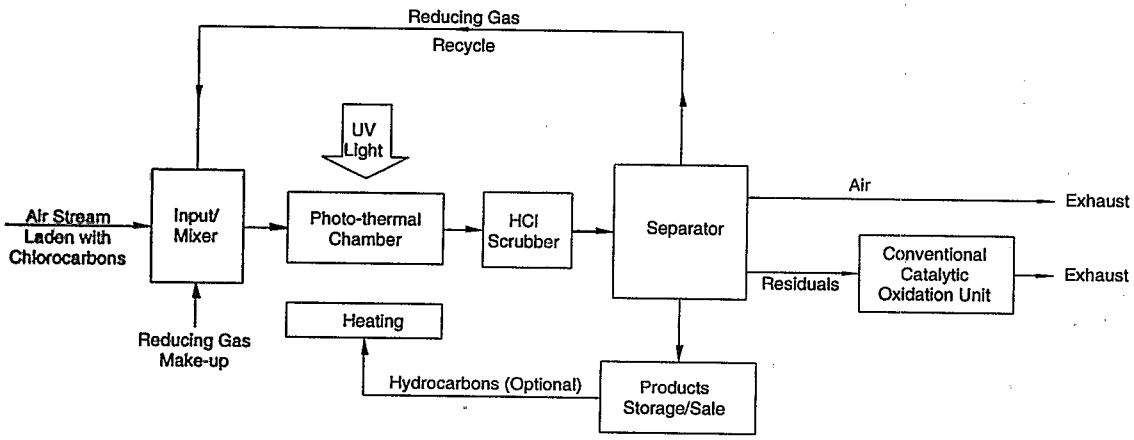

Reductive Photo-Dechlorination (RPD) Treatment

The SITE Program assesses but does not approve or endorse technologies.

WASTE APPLICABILITY:

The RPD process is designed specifically to treat volatile chlorinated wastes in the liquid, gaseous, or adsorbed states. The RPD process was tested on methyl chloride, dichloromethane (DCM), chloroform, carbon tetrachloride, trichloroethane (TCA), dichloroethene (PCE), and trichloroethene (TCE).

Field applications include treatment of organic wastes discharged from soil vapor extraction operations, vented from industrial hoods and stacks, and adsorbed on activated carbon. The process can be used to (1) treat gas streams containing chlorinated hydrocarbons, and (2) pretreat gas streams entering catalytic oxidation systems by reducing chlorine content and protecting the catalyst against poisoning.

In comparison to other photo-thermal processes (such as reductive photo-thermal oxidation [RPTO] and photo-thermal oxidation [PTO]), the RPD process is mostly applicable to streams without air and very high concentrations of contaminants (bulk down to greater than 1 percent). At very low concentrations (parts per million) and in the presence of air, the other photo-thermal processes may more cos- effective.

STATUS:

Bench-scale experiments were conducted on several contaminants (such as DCM, DCE, TCA, and TCE). Measurements of concentrations of parent compounds and products as a function of residence time were obtained at several test conditions. From these measurements, conversion and dechlorination efficiencies were determined at optimal operating conditions.

Experimental results on a representative chlorocarbon contaminant (TCA) are available in the Emerging Technology Bulletin (EPA/540/F-94/508). Greater than 99 percent conversion and dechlorination were demonstrated with high selectivity towards two saleable hydrocarbon products, ethane and methane. Similar favorable results were obtained for other saturated and unsaturated chlorocarbons treated by the RPD process.

Results of a cost analysis based on experimental data indicate that the RPD process is extremely cost competitive. For example, the cost of treating TCE concentrations of 1,000 ppm and 10,000 ppm is $1.10 and $0.25 per pound treated, respectively. The cost per 1,000 cubic feet of contaminated stream with 1,000 ppm is $0.38 and $0.88, respectively.

All technical data have been gathered and optimization has been completed. Design and assembly of a pilot-scale prototype are underway. The field demonstration may take place during 1999. The developer is seeking appropriate sites for field demonstration. After successful demonstration, the RPD process will be ready for full-scale commercialization.

FOR FURTHER INFORMATION:

EPA PROJECT MANAGER:
Michelle Simon
U.S. EPA
National Risk Management Research Laboratory
26 West Martin Luther King Drive
Cincinnati, OH 45268
513-569-7469
Fax: 513-569-7676

TECHNOLOGY DEVELOPER CONTACT:
Moshe Lavid
ENERGIA, Inc.
P.O. Box 470
Princeton, NJ 08542-470
609-799-7970
Fax: 609-799-0312

The SITE Program assesses but does not approve or endorse technologies.

ENERGY AND ENVIRONMENTAL RESEARCH CORPORATION
(Hybrid Fluidized Bed System)

TECHNOLOGY DESCRIPTION:

The Hybrid Fluidized Bed (HFB) system treats contaminated solids and sludges by incinerating organic compounds and extracting and detoxifying volatile metals. The system consists of three stages: a spouted bed, a fluidized afterburner, and a high-temperature particulate soil extraction system.

First, the spouted bed rapidly heats solids and sludges to allow extraction of volatile organic and inorganic compounds. The spouted bed retains larger soil clumps until they are reduced in size but allows fine material to pass through quickly. This segregation process is beneficial because organic contaminants in fine particles vaporize rapidly. The decontamination time for large particles is longer due to heat and mass transfer limitations.

The central spouting region is operated with an inlet gas velocity of greater than 150 feet per second. This velocity creates an abrasion and grinding action, rapidly reducing the size of the feed materials through attrition. The spouted bed operates between 1,500 and 1,700 °F under oxidizing conditions.

Organic vapors, volatile metals, and fine soil particles are carried from the spouted bed through an open-hole type distributor, which forms the bottom of the second stage, the fluidized bed afterburner. The afterburner provides sufficient retention time and mixing to incinerate the organic compounds that escape the spouted bed, resulting in a destruction and removal efficiency of greater than 99.99 percent. The afterburner also contains bed materials that absorb metal vapors, capture fine particles, and promote formation of insoluble metal silicates. The bed materials are typically made of silica-supported bauxite, kaolinite, or lime.

In the third stage, the high-temperature particulate soil extraction system removes clean processed soil from the effluent gas stream with one or two hot cyclones. Clean soil is extracted hot to prevent unreacted volatile metal species from condensing in the soil. Off-gases are then quenched and passed through a conventional baghouse to capture the condensed metal vapors.

Generally, material handling problems create major operational difficulties for soil cleanup devices. The HFB system uses a specially designed auger feed system. Solids and sludges are dropped through a lock hopper system into an auger shredder, which is a rugged, low-revolutions-per-minute, feeding-grinding device. Standard augers are simple and reliable, but often they are susceptible to clogging from feed compression in the auger. In the HFB system, the auger shredder is close-coupled to the spouted bed to reduce compression and clump formation during feeding. The close-couple

The SITE Program assesses but does not approve or endorse technologies.

arrangement locates the tip of the auger screw several inches from the internal surface of the spouted bed, preventing the formation of soil plugs.

WASTE APPLICABILITY:

This technology is applicable to soils and sludges contaminated with organic and volatile inorganic contaminants. Nonvolatile inorganics are not affected.

STATUS:

This technology was accepted into the SITE Emerging Technology Program in January 1990. Design and construction of the commercial prototype HFB system and a limited shakedown are complete. The Emerging Technology Bulletin (EPA/540/F-93/508) is available from EPA.

FOR FURTHER INFORMATION:

EPA PROJECT MANAGER:
Teri Richardson
U.S. EPA
National Risk Management Research Laboratory
26 West Martin Luther King Drive
Cincinnati, OH 45268
513-569-7949
Fax: 513-569-7105

TECHNOLOGY DEVELOPER CONTACT:
Richard Koppang
Energy and Environmental Research Corporation
18 Mason Street
Irvine, CA 92718
714-859-8851
Fax: 714-859-3194

The SITE Program assesses but does not approve or endorse technologies.

ENERGY AND ENVIRONMENTAL RESEARCH CORPORATION
(Reactor Filter System)

TECHNOLOGY DESCRIPTION:

The Energy and Environmental Research Corporation (EER) Reactor Filter System (RFS) technology is designed to control gaseous and entrained particulate matter emissions from the primary thermal treatment of sludges, soils, and sediments. Most Superfund sites are contaminated with toxic organic chemicals and metals. Currently available thermal treatment systems for detoxifying these materials release products of incomplete combustion (PIC) and volatile toxic metals. In addition, the large air pollution control devices (APCD) often required to control PICs and metals are generally not suitable for transport to remote Superfund sites. EER designed the RFS to avoid some of these logistical problems. The RFS uses a fabric filter installed immediately downstream of the thermal treatment process; the filter controls toxic metals, particulates, and unburned organic species. The RFS involves the following three steps:

- First, solids are treated with a primary thermal process, such as a rotary kiln, fluidized bed, or other system designed for thermal treatment.
- Next, a low-cost, aluminosilicate sorbent, such as kaolinite, is injected into the flue gases at temperatures near 1,300 °C (2,370 °F). The sorbent reacts with volatile metal species such as lead, cadmium, and arsenic in the gas stream; the metals chemically adsorb onto the surfaces of the sorbent particles. This adsorbtion forms insoluble, nonleachable alumino-silicate complexes similar to cementitious species.
- Finally, fabric filtration, operating at temperatures up to 1,000 °C (1,830 °F) provides additional residence time for the sorbent/metalreaction, producing nonleachable by-products. This step also provides additional time for the destruction of organic compounds associated with particulate matter, reducing ash toxicity.

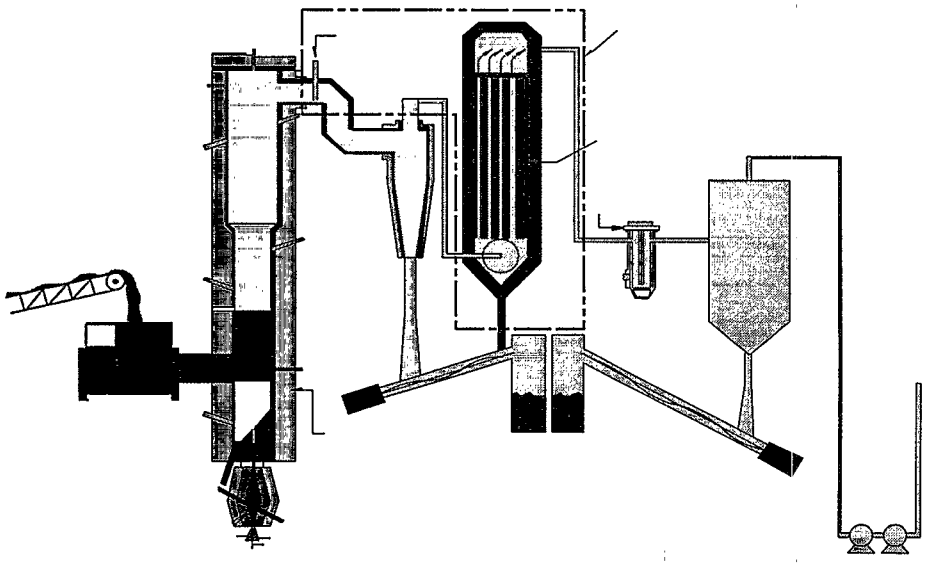

Example Application of RFS Equipment

The SITE Program assesses but does not approve or endorse technologies.

Because of the established link between PIC formation and gas-particle chemistry, this process can virtually eliminate potential polychlorinated dioxin formation.

The RFS may improve the performance of existing thermal treatment systems for Superfund wastes containing metals and organics. During incineration, hazardous organics are often attached to the particulate matter that escapes burning in the primary zone. The RFS provides sufficient residence time at sufficiently high temperatures to destroy such organics. Also, by increasing gas-solid contact parameters, the system can decrease metal emissions by preventing the release of metals in vapors or retained on entrained particles.

The figure on the previous page shows the RFS installed immediately downstream of the primary thermal treatment zone at EER's Spouted Bed Combustion Facility. Because the spouted bed generates a highly particulate-laden gas stream, a high-temperature cyclone is used to remove coarse particulate matter upstream of the RFS. Sorbent is injected into the flue gas upstream of the high temperature fabric filter. A conventional baghouse was available for comparison with RFS performance during the demonstration. However, the baghouse is not needed in typical RFS applications because the high-temperature filtration medium has shown similar performance to conventional fabric filtration media.

WASTE APPLICABILITY:

The RFS is designed to remove entrained particulates, volatile toxic metals, and condensed-phase organics present in high-temperature (800 to 1,000 °C) gas streams generated from the thermal treatment of contaminated soils, sludges, and sediments. Many conventional treatments can be combined with the RFS technology. Process residuals will consist of nonleachable particulates that are essentially free of organic compounds, thus reducing toxicity, handling risks, and landfill disposal.

STATUS:

The RFS was accepted into the Emerging Technology Program in 1993. EER developed the pilot-scale process through a series of bench-scale screening studies, which were completed in September 1994. The screening studies guided the sorbent selection and operating conditions for the pilot-scale demonstration. The tests were completed in 1996; the final report will be available from the National Technical Information Service.

FOR FURTHER INFORMATION:

EPA PROJECT MANAGER:
Steven Rock
U.S. EPA
National Risk Management Research Laboratory
26 West Martin Luther King Drive
Cincinnati, OH 45268
513-569-7149
Fax: 513-569-7105

TECHNOLOGY DEVELOPER CONTACT:
Neil Widmer
Energy and Environmental Research Corporation
18 Mason Street
Irvine, CA 92718
714-859-8851
Fax: 714-859-3194

The SITE Program assesses but does not approve or endorse technologies.

ENVIRONMENTAL BIOTECHNOLOGIES, INC.
(Fungal Degradation Process)

TECHNOLOGY DESCRIPTION:

Polycyclic aromatic hydrocarbons (PAH) are typical pollutants at creosote wood treatment sites and at manufacturing gas plants (MGP). Media contaminated with these compounds are considered hazardous due to the potential carcinogenic effects of specific PAHs.

Environmental BioTechnologies, Inc. (EBT), investigated the bioremediation of contaminants associated with former MGP sites in a program cosponsored by the Electric Power Research Institute and the U. S. EPA. Initially, EBT screened over 500 fungal cultures (mostly brown and white rot fungi) for their ability to degrade PAHs and other organic pollutants. A group of 30 cultures were more intensely examined and several cultures were optimized for use in a soil composting process.

EBT conducted bench-scale treatability studies to assess the feasibility of PAH degradation in soil using a fungal-augmented system designed to enhance natural biological metabolic processes. Results of one study are shown in the figure below. Concentrations of 10 PAHs were determined over a 59-day treatment period.

Some states have a soil treatment standard of 100 parts per million for total PAHs. EBT's fungal treatment process was able to reach this cleanup standard within a 5- to 6-week treatment period for one PAH-contaminated soil, as shown in the figure on the next page.

WASTE APPLICABILITY:

One intended environmental application for this technology is the treatment of soil and sediment contaminated with coal tar wastes from former MGP sites. Soils at these sites are contaminated with PAHs and are difficult to cost-effectively remediate. EBT's fungal soil treatment process is projected to cost $66 to $80 per ton, which is more cost-effective than other technical approaches such as coburning in utility burners, thermal desorption, and incineration.

STATUS:

EBT was accepted into the SITE Emerging Technology Program in 1993 and began laboratory studies in 1994. The project was completed in 1996. The overall project objectives were to (1) identify fungal and bacterial cultures that efficiently degrade coal tar

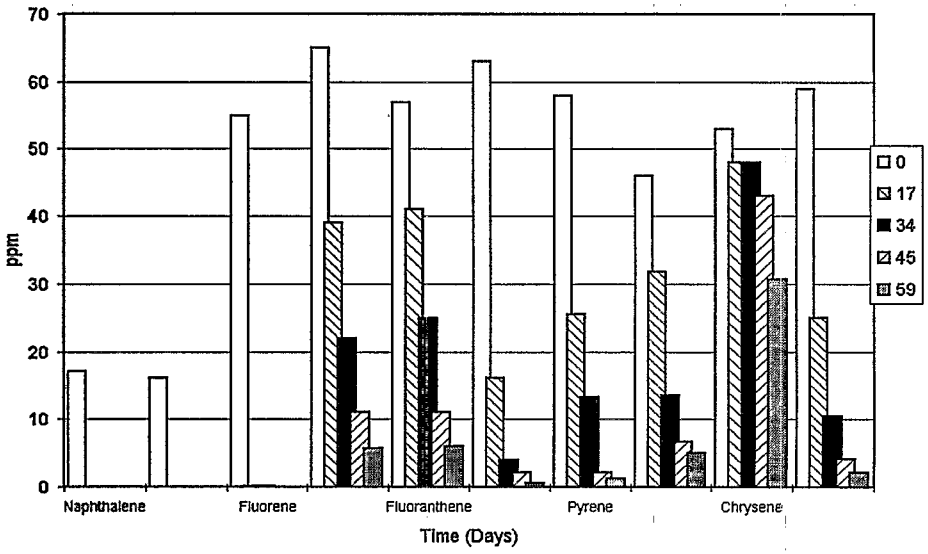

Fungal Degradation of Five PAHs in Soil Over A 59-Day Period

The SITE Program assesses but does not approve or endorse technologies.

wastes, and (2) develop and demonstrate a pilot-scale process that can be commercialized for utility industry applications.

EBT initially worked with PAH-spiked water and soils. EBT then tested, under optimized conditions, selected soil cultures from several MGP sites identified by New England Electric Services, a utility company sponsor. Testing identified several possibly superior fungal cultures capable of degrading PAHs. These cultures exhibited degradative preferences for either lower molecular weight or higher molecular weight PAHs, suggesting a consortia as a possible best approach. These cultures were then examined in nutrient-supplemented systems to determine optimal PAH degradation rates.

A bench-scale composter system was used to determine optimal moisture content, soil amendment requirements, and inoculation procedures for accelerating PAH degradation. During the second year, small (less than 1 cubic yard) plots of MGP-site soil were used to test the optimized process in laboratory studies before a field demonstration is conducted. Results from the evaluation was published by U. S. EPA in 1997. Based on its performance during the Emerging Technology Program evaluation, the microbial composting process has been invited to participate in the SITE Demonstration Program.

EBT has also conducted a bench-scale treatability study for a company in France to determine the feasibility of fungal PAH degradation in MGP soil. Results demonstrated an increased rate of biodegradation in the fungal-augmented system for all of the measured individual PAH compounds in the 80-day treatment period, compared with the natural, unamended system.

EBT is also currently conducting a 10-ton soil PAH field project to demonstrate that the fungal degradation process can be scaled up and used in commercial applications.

FOR FURTHER INFORMATION:

EPA PROJECT MANAGER:
Ronald Lewis
U.S. EPA
National Risk Management Research Laboratory
26 West Martin Luther King Drive
Cincinnati, OH 45268
513-569-7856
Fax: 513-569-7105

TECHNOLOGY DEVELOPER CONTACT:
Douglas Munnecke
Environmental BioTechnologies, Inc.
969C Industrial Road
San Carlos, CA 94070
415-596-1020
Fax: 415-596-1016
E-mail: ebt@ix.netcom.com

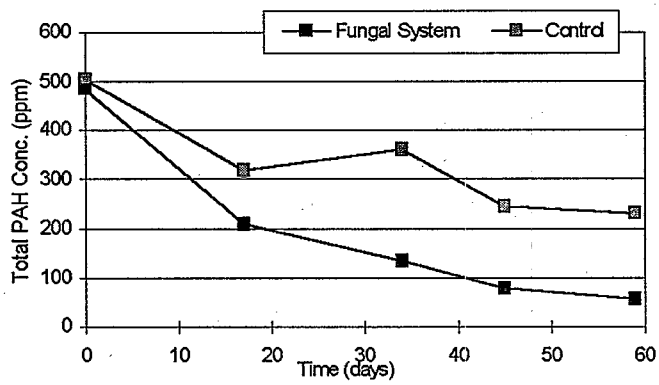

Degradation of Total PAHs In Soil

The SITE Program assesses but does not approve or endorse technologies.

FERRO CORPORATION
(Waste Vitrification Through Electric Melting)

TECHNOLOGY DESCRIPTION:

Vitrification technology converts contaminated soils, sediments, and sludges into oxide glasses, chemically rendering them nontoxic and suitable for landfilling as nonhazardous materials. Successful vitrification of soils, sediments, and sludges requires (1) development of glass compositions tailored to a specific waste, and (2) glass melting technology that can convert the waste and additives into a stable glass without producing toxic emissions.

In an electric melter, glass — an ionic conductor of relatively high electrical resistivity — stays molten with heating. Such melters process waste under a relatively thick blanket of feed material, which forms a counterflow scrubber that limits volatile emissions (see figure below).

Commercial electric melters have significantly reduced the loss of inorganic volatile constituents such as boric anhydride (B_2O_3) or lead oxide (PbO). Because of its low emission rate and small volume of exhaust gases, electric melting is a promising technology for incorporating waste into a stable glass matrix.

WASTE APPLICABILITY:

Vitrification stabilizes inorganic components found in hazardous waste. In addition, the high temperature involved in glass production (about 1,500 °C) decomposes organic compounds in the waste such as anthracene, bis(2-ethylhexyl phthalate), and pentachlorophenol. The decomposition products can easily be removed from the low volume of melter off-gas.

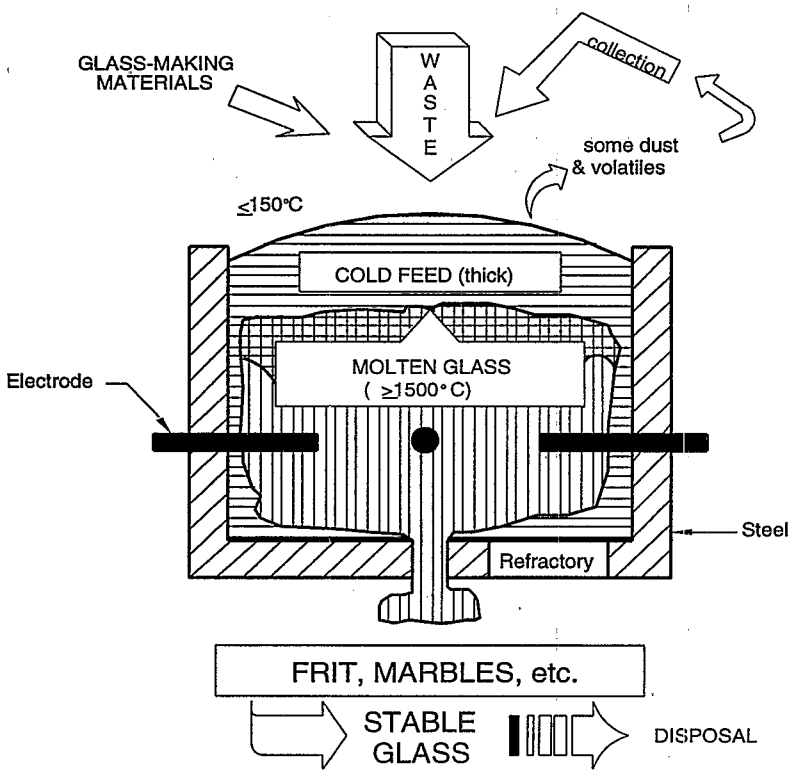

Electric Furnace Vitrification

The SITE Program assesses but does not approve or endorse technologies.

STATUS:

Under the Emerging Technology Program, synthetic soil matrix IV (SSM-IV) has been developed and subjected to toxicity characteristic leaching procedure (TCLP) testing.

Ten independent replicates of the preferred composition produced the following results:

	TCLP analyte concentration, parts per million	
Metal	Remediation Limit	Mean of Glass Replicates
As	5	<0.100
Cd	1	<0.010
Cr	5	0.019
Cu	5	0.355
Pb	5	0.130
Ni	5	<0.010
Zn	5	0.293

SSM-IV and additives (including sand, soda ash, and other minerals) required to convert SSM-IV to the preferred glass composition have been processed in a laboratory-scale electric melter. Three separate campaigns have produced glass at 17 pounds per hour at a fill of 67 percent SSM-IV and 33 percent glass-making additives. The TCLP mean analyte concentrations were less than 10 percent of the remediation limit at a statistical confidence of 95 percent. Ferro Corporation's experience indicates that this melting rate would produce an equivalent rate of 1 ton per hour in an electric melter used to treat wastes at a Superfund site. The Emerging Technology Bulletin (EPA/540/F-95/503) is available from EPA.

FOR FURTHER INFORMATION:

EPA PROJECT MANAGER:
Randy Parker
U.S. EPA
National Risk Management Research Laboratory
26 West Martin Luther King Drive
Cincinnati, OH 45268
513-569-7271
Fax: 513-569-7571

TECHNOLOGY DEVELOPER CONTACT:
S.K. Muralidhar
Ferro Corporation
Corporate Research
7500 East Pleasant Valley Road
Independence, OH 44131
216-641-8580
Fax: 216-524-0518

The SITE Program assesses but does not approve or endorse technologies.

GENERAL ATOMICS, NUCLEAR REMEDIATION TECHNOLOGIES DIVISION

(Acoustic Barrier Particulate Separator)

TECHNOLOGY DESCRIPTION:

The acoustic barrier separates particulates in a high temperature gas flow. The separator produces an acoustic waveform directed against the gas flow, causing particulates to move opposite the flow. The particulates drift to the wall of the separator, where they aggregate with other particulates and precipitate into a collection hopper. The acoustic barrier particulate separator differs from other separators by combining both high efficiency and high temperature capabilities.

The figure below presents a conceptual design. High temperature inlet gas flows through a muffler chamber and an agglomeration segment before entering the separation chamber. In the separation chamber, particulates stagnate due to the acoustic force and then drift to the chamber wall, where they collect as a dust cake that falls into a collection hopper. The solids are transported from the collection hopper by a screw-type conveyor against a clean purge gas counterflow. The purge gas cools the solids and guards against contamination of particulates by inlet-gas volatiles in the process stream.

The gas flows past the acoustic source and leaves the separation chamber through an exit port. The gas then passes through another muffler chamber and flows through sections where it is allowed to cool and any remaining gas-borne particulate samples are collected. Finally, the gas is further scrubbed or filtered as necessary before it is discharged.

The separator can remove the entire range of particle sizes; it has a removal efficiency of greater than 90 percent for submicron particles and an overall removal efficiency of greater than 99 percent. Due to the large diameter of the separator, the system is not prone to fouling.

WASTE APPLICABILITY:

This technology can treat off-gas streams from thermal desorption, pyrolysis, and incineration of soil, sediment, sludges, other solid wastes, and liquid wastes. The acoustic barrier particulate separator is a high-temperature, high-throughput process with a high removal efficiency for fine dust and fly ash. It is particularly suited for thermal processes where high temperatures must be maintained to prevent condensation onto particulates. Applications include removal of

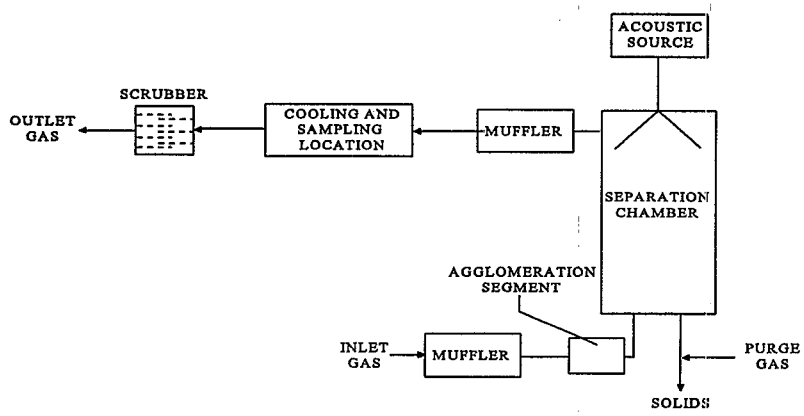

Acoustic Barrier Particulate Separator

The SITE Program assesses but does not approve or endorse technologies.

gas-borne solids during thermal treatment of semivolatile organics, such as polychlorinated biphenyls, and gas-phase separation of radioactive particles from condensible hazardous materials.

STATUS:

The acoustic barrier particulate separator was accepted into the SITE Emerging Technology Program in 1993. The principal objective of this project will be to design, construct, and test a pilot-scale acoustic barrier particulate separator that is suitable for parallel arrangement into larger systems. The separator will be designed for a flow of 300 cubic feet per minute and will be tested using a simulated flue gas composed of heated gas and injected dust.

FOR FURTHER INFORMATION:

EPA PROJECT MANAGER:
Ronald Lewis
U.S. EPA
National Risk Management Research Laboratory
26 West Martin Luther King Drive
Cincinnati, OH 45268
513-569-7856
Fax: 513-569-7105

TECHNOLOGY DEVELOPER CONTACT:
Anthony Gattuso
General Atomics
Nuclear Remediation Technologies Division
MS 2/633
P.O. Box 85608
San Diego, CA 92186-9784
619-455-2910
Fax: 619-455-3679

The SITE Program assesses but does not approve or endorse technologies.

HARDING LAWSON ASSOCIATES
(Formerly ABB Environmental Services, Inc.)
(Two-Zone, Plume Interception, In Situ Treatment Strategy)

TECHNOLOGY DESCRIPTION:

The two-zone, plume interception, in situ treatment strategy is designed to treat chlorinated and nonchlorinated organic compounds in saturated soils and groundwater using a sequence of anaerobic and aerobic conditions (see figure below). The in situ anaerobic and aerobic system constitutes a treatment train that biodegrades a wide assortment of chlorinated and nonchlorinated compounds.

When applying this technology, anaerobic and aerobic conditions are produced in two distinct, hydraulically controlled, saturated soil zones. Groundwater passes through each zone as it is recirculated through the treatment area. The first zone, the anaerobic zone, is designed to partially dechlorinate highly chlorinated solvents such as tetrachloroethene (PCE), trichloroethene (TCE), and 1,1,1-trichloroethane with natural biological processes. The second zone, the aerobic zone, is designed to biologically oxidize the partially dechlorinated products from the first zone, as well as other compounds that were not susceptible to the anaerobic treatment phase.

Anaerobic conditions are produced or enhanced in the first treatment zone by introducing a primary carbon source, such as lactic acid, and mineral nutrients, such as nitrogen and phosphorus. When proper anaerobic conditions are attained, the target contaminants are reduced. For example, PCE is dechlorinated to TCE, and TCE is dechlorinated to dichloroethene (DCE) and vinyl chloride. Under favorable conditions, this process can completely dechlorinate the organics to ethene and ethane.

Aerobic conditions are produced or enhanced in the second treatment zone by introducing oxygen, mineral nutrients such as nitrogen and phosphorus, and possibly an additional carbon source, such as methane (if an insufficient supply

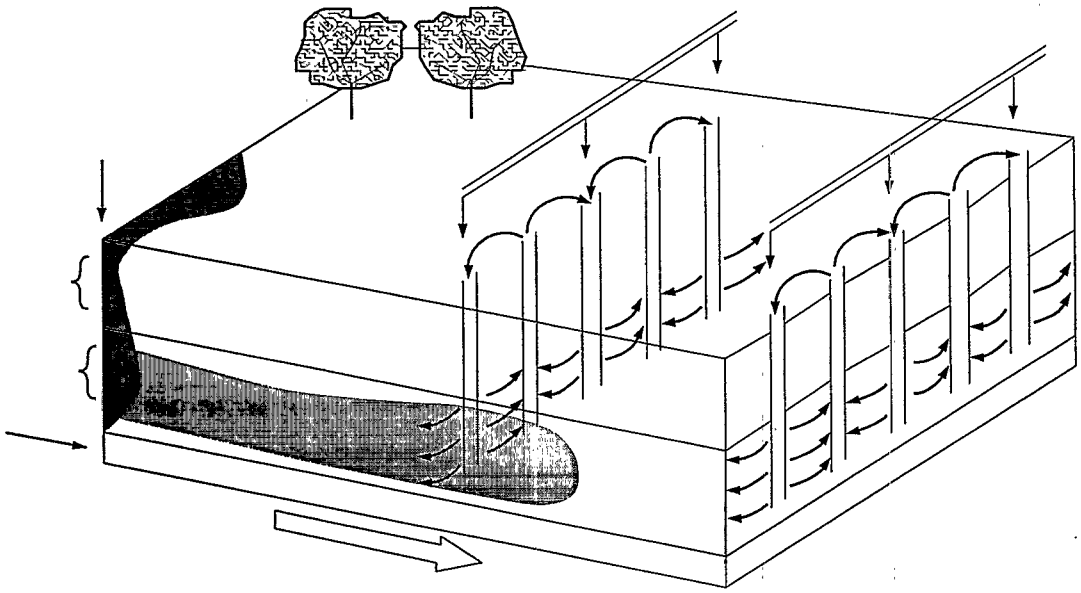

Two-Zone, Plume Interception, In Situ Treatment Strategy

The SITE Program assesses but does not approve or endorse technologies.

of methane results from the upstream, anaerobic zone). When proper aerobic conditions are attained in this zone, partially dechlorinated products and other target compounds from the first zone are oxidized. For example, less-chlorinated ethenes such as DCE and vinyl chloride are cometabolized during the aerobic microbiological degradation of methane.

The treatment strategy is designed to biologically remediate subsoils by enhancing indigenous microorganism activity. If indigenous bacterial populations do not provide the adequate anaerobic or aerobic results, specially adapted cultures can be introduced to the aquifer. These cultures are introduced using media-filled trenches that can support added microbial growth.

WASTE APPLICABILITY:

The two-zone, plume interception, in situ treatment strategy is designed to treat groundwater and saturated soils containing chlorinated and nonchlorinated organic compounds.

STATUS:

The two-zone, plume interception, in situ treatment strategy was accepted into the SITE Emerging Technology Program in July 1989. Optimal treatment parameters for field testing were investigated in bench-scale soil aquifer simulators. The objectives of bench-scale testing were to (1) determine factors affecting the development of each zone, (2) evaluate indigenous bacterial communities, (3) demonstrate treatment of chlorinated and nonchlorinated solvent mixtures, and (4) develop a model for the field remediation design. The Emerging Technology Bulletin (EPA/540/F-95/510), which details the bench-scale testing results, is available from EPA.

A pilot-scale field demonstration system was installed at an industrial facility in Massachusetts. Pilot-scale testing began in September 1996. Results from this testing indicate the following:

- The reductive dechlorination of PCE and TCE to DCE, VC, and ethene has been accomplished primarily by sulfate-reducing bacteria.
- A time lag of about 4 months was required before significant reductive dechlorination occurred. This corresponded to the time and lactic acid dosing required to reduce the redox to about -100 throughout the treatment cell.
- Sequential anaerobic-aerobic (Two-Zone) biodegradation of PCE and its degradation products appear to be a viable and cost-effective treatment technology for the enhancement of natural reductive dechlorination processes.

FOR FURTHER INFORMATION:

EPA PROJECT MANAGER:
Ronald Lewis
U.S. EPANational Risk Management Research Laboratory
26 West Martin Luther King Drive
Cincinnati, OH 45268
513-569-7856
Fax: 513-569-7105

TECHNOLOGY DEVELOPER CONTACT:
Jaret Johnson or Willard Murray
Harding Lawson Associates
107 Audubon Road, Suite 25
Wakefield, MA 01880
781-246-6606
Fax: 781-246-5060
E-mail: jjohnson@harding.com or wmurray@harding.com

The SITE Program assesses but does not approve or endorse technologies.

HAZARDOUS SUBSTANCE MANAGEMENT RESEARCH CENTER AT NEW JERSEY INSTITUTE OF TECHNOLOGY and RUTGERS, THE STATE UNIVERSITY OF NEW JERSEY

(Pneumatic Fracturing and Bioremediation Process)

TECHNOLOGY DESCRIPTION:

The Hazardous Substance Management Research Center (HSMRC) has developed a technology for the in situ remediation of organic contaminants. The process enhances in situ bioremediation through pneumatic fracturing to establish an extended biodegradation zone supporting aerobic, denitrifying, and methanogenic populations. The technique is designed to provide faster transport of nutrients and electron acceptors (for example, oxygen and nitrate) to the microorganisms, particularly in geologic formations with moderate to low permeability.

An overview of the process is shown in the figure below. First, the formation is pneumatically fractured by applying high pressure air in 2-foot-long, discrete intervals through a proprietary device known as an HQ Injector. After the formation has been fractured with air, nutrients or other chemicals are introduced into the fracture network to stimulate biological activity. The carrier gas and the particular amendments (atomized liquid or dry media) injected into the formation can be adjusted according to the target contaminant and the desired degradation environment (aerobic, denitrifying, and anaerobic). The high air-to-liquid ratio atomizes the liquid supplements during injection, increasing their ability to penetrate the fractured formation. In the final step of the process, the site is operated as an in situ bioremediation cell to degrade the contaminants. A continuous, low-level air flow is maintained through the fracture network by a vacuum pump that provide oxygen to the microbial populations. Periodically, additional injections are made to replenish nutrients and electron acceptors.

WASTE APPLICABILITY:

The integrated process can be applied to a wide variety of geologic formations. In geologic formations with low to moderate permeabilities, such as those containing clay, silt, or tight bedrock, the process creates artificial fractures that increase formation permeability. In

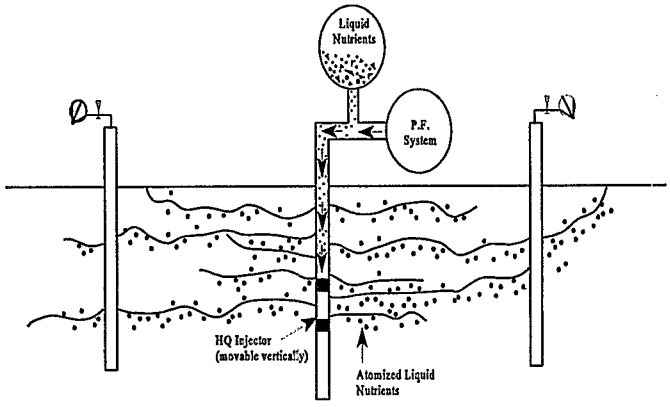

Overview of the Integrated Pneumatic Fracturing and Bioremediation Process

The SITE Program assesses but does not approve or endorse technologies.

formations with higher permeabilities, the process is still useful for rapid aeration and delivery of amendments to the microorganisms.

STATUS:

This technology was accepted into the SITE Emerging Technology Program in July 1991 and was evaluated at a gasoline refinery located in the Delaware Valley. Soil at the site was contaminated with benzene, toluene, and xylene (BTX) at concentrations up to 1,500 milligrams per kilogram, along with other hydrocarbons. The evaluation was completed in May 1994. Contact the EPA Project Manager for a copy of the results from the evaluation. A journal article has been submitted to the *Journal of Air and Waste Management*.Throughout the 50-week pilot-scale evaluation, off-gases were monitored for BTX, carbon dioxide, and methane, which served as indicators of biological activity. Process effectiveness was evaluated by comparing analytical results of soil samples collected at the beginning and the end of the evaluation.

Vapor extraction tests revealed postfracture air flows to be 24 to 105 times higher than prefracture air flows. Measurements of ground surface heave and observations of fractures venting to the ground surface indicated that the fractures had effective radii of up to 20 feet from the injection point.

Soil gas data collected at the monitoring wells show that the indigenous microbial populations responded favorably to the injection of the soil amendments. Soil gas data consistently showed elevated levels of carbon dioxide immediately following each injection, indicating increased rates of BTX mineralization. Correspondingly, BTX concentrations in the wells gradually declined over time after depletion of oxygen and nitrate, at which time methanogenic processes began to dominate until the next subsurface amendment injection.

Comparative analysis of soil samples extracted from the site before and after the evaluation period showed that a substantial amount of BTX was degraded as a result of the integrated process. Total soil-phase BTX was reduced from 28 to 6 kilograms over the 50-week pilot test, corresponding to a 79 percent reduction in total BTX mass. An assessment of pathways of BTX loss from the formation showed a large proportion of the mass reduction (85 percent) was attributable to bioremediation.

Process development for this evaluation was supported in part by the U.S. Department of Defense, Advanced Research Projects Agency, and the Office of Naval Research.

FOR FURTHER INFORMATION:

EPA PROJECT MANAGER:
Randy Parker
U.S. EPA
National Risk Management Research Laboratory
26 West Martin Luther King Drive
Cincinnati, OH 45268
513-569-7271
Fax: 513-569-7571

TECHNOLOGY DEVELOPER CONTACTS:
John Schuring
Department of Civil and Environmental Engineering
New Jersey Institute of Technology
University Heights
Newark, NJ 07102
201-596-5849
Fax: 201-802-1946

David Kosson
Department of Chemical and Biochemical Engineering
Rutgers, The State University of New Jersey
P.O. Box 909
Piscataway, NJ 08855
908-445-4346
Fax: 908-445-2637

The SITE Program assesses but does not approve or endorse technologies.

HIGH VOLTAGE ENVIRONMENTAL APPLICATIONS, INC.

(High-Energy Electron Beam Irradiation)

TECHNOLOGY DESCRIPTION:

The high-energy electron beam irradiation technology is a low-temperature method for destroying complex mixtures of hazardous organic chemicals in hazardous wastes. These wastes include slurried soils, river or harbor sediments, and sludges. The technology can also treat contaminated soils and groundwater.

The figure below illustrates the mobile electron beam treatment system. The system consists of a computer-automated, portable electron beam accelerator and a delivery system. The 500-kilovolt electron accelerator produces a continuously variable beam current from 0 to 40 milliamperes. At full power, the system is rated at 20 kilowatts. The waste feed rate and beam current can be varied to obtain doses of up to 2,000 kilorads in a one-pass, flow-through mode.

The system is trailer-mounted and is completely self-contained, including a 100-kilowatt generator for remote locations or line connectors where power is available. The system requires only a mixing tank to slurry the treatable solids. The system also includes all necessary safety checks.

The computerized control system continuously monitors the waste feed rate, absorbed dose, accelerator potential, beam current, and all safety shutdown features. The feed rate is monitored with a calibrated flow valve. The absorbed dose is estimated based on the difference in the temperature of the waste stream before and after irradiation. The system is equipped with monitoring devices that measure the waste stream temperature before and after irradiation. Both the accelerating potential and the beam current are obtained directly from the transformer.

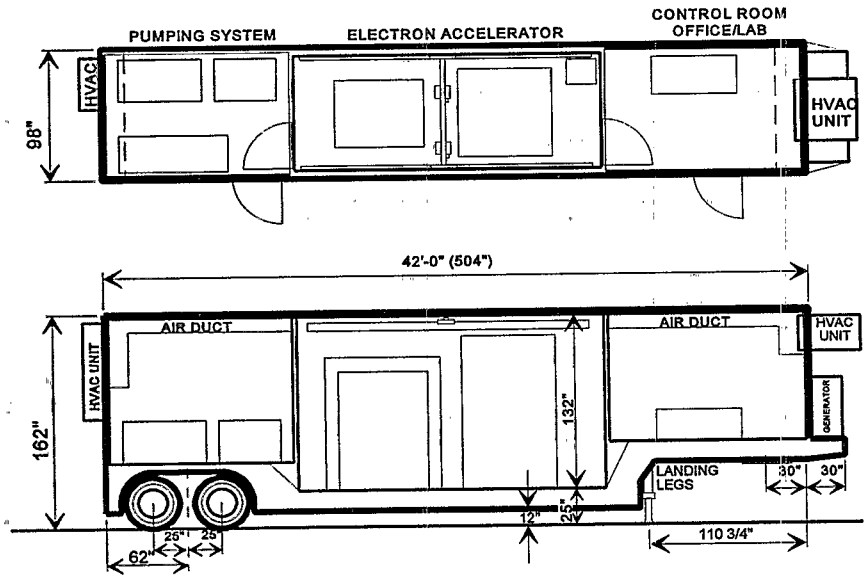

Mobile Electron Beam Treatment System

The SITE Program assesses but does not approve or endorse technologies.

Except for slurrying, this technology does not require any pretreatment of wastes.

WASTE APPLICABILITY:

This technology treats a variety of organic compounds, including wood-treating chemicals, pesticides, insecticides, petroleum residues, and polychlorinated biphenyls (PCB) in slurried soils, sediments, and sludges.

STATUS:

High Voltage Environmental Applications, Inc. (HVEA), was accepted into the SITE Emerging Technology Program in 1993. Under this program, HVEA will demonstrate its mobile pilot plant on soils, sediments, or sludges at various hazardous waste sites. Candidate sites are being identified. On-site studies will last up to 2 months.

Initial studies by HVEA have shown that electron beam irradiation effectively removes 2,4,6-trinitrotoluene from soil slurries.

As part of the Emerging Technology Program, HVEA has identified 350 tons of soil contaminated with an average Aroclor 1260 concentration of about 1,000 milligrams per kilogram. A small 1-ton feasibility study was conducted in August 1995. After results are available from the 1-ton study, HVEA plans to make its mobile unit available for full-scale remediations.

In a recent bench-scale study, a multisource hazardous waste leachate containing 1 percent dense nonaqueous phase liquid was successfully treated. In another bench-scale study, a leachate containing a light nonaqueous phase liquid contaminated with PCBs was treated to F039 standards.

FOR FURTHER INFORMATION:

EPA PROJECT MANAGER:
Mary Stinson
U.S. EPA
National Risk Management Research Laboratory
MS-104, Building 10
2890 Woodbridge Avenue
Edison, NJ 08837-3679
908-321-6683
Fax: 908-321-6640

TECHNOLOGY DEVELOPER CONTACT:
William Cooper
High Voltage Environmental Applications, Inc.
9562 Doral Boulevard
Miami, FL 33178
305-593-5330
Fax: 305-593-0071

The SITE Program assesses but does not approve or endorse technologies.

INSTITUTE OF GAS TECHNOLOGY
(Chemical and Biological Treatment)

TECHNOLOGY DESCRIPTION:

The Institute of Gas Technology (IGT) chemical and biological treatment (CBT) process remediates sludges, soils, groundwater, and surface water contaminated with organic pollutants, such as polynuclear aromatic hydrocarbons (PAH) and polychlorinated biphenyls. The treatment system (see photograph below) combines two remedial techniques: (1) chemical oxidation as pretreatment, and (2) biological treatment using aerobic and anaerobic biosystems in sequence or alone, depending on the waste. The CBT process uses mild chemical treatment to produce intermediates that are biologically degraded, reducing the cost and risk associated with a more severe treatment process such as incineration.

During the pretreatment stage, the contaminated material is treated with a chemical reagent that degrades the organics to carbon dioxide, water, and partially oxidized intermediates. In the second stage of the CBT process, biological systems degrade the hazardous residual materials and the partially oxidized intermediates from the first stage. Chemically treated wastes are subjected to cycles of aerobic and anaerobic degradation, if aerobic or anaerobic treatment alone is not sufficient. Several cycles of chemical and biological treatment are also used for extremely recalcitrant contaminants.

WASTE APPLICABILITY:

The CBT process can be applied to soils, sludges, groundwater, and surface water containing (1) high waste concentrations that would typically inhibit bioremediation, or (2) low waste concentrations for which bioremediation alone is too slow. The process is not adversely affected by radionuclides or heavy metals. Depending on the types of heavy metals present, these metals will bioaccumulate in the biomass,

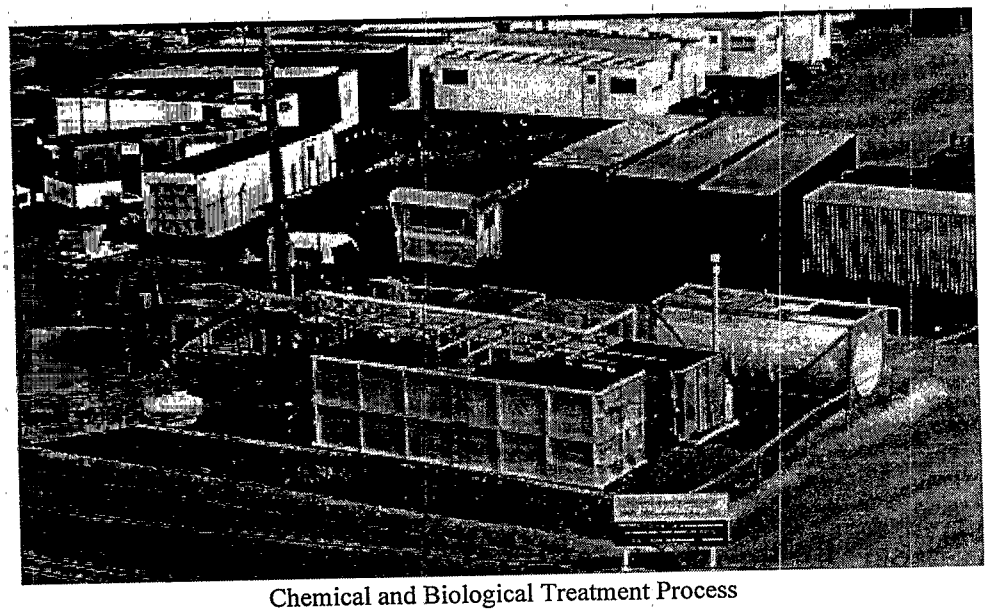

Chemical and Biological Treatment Process

The SITE Program assesses but does not approve or endorse technologies.

complex with organic or inorganic material in the soil slurries, or become soluble in the recycled water.

The CBT process can be applied to a wide range of organic pollutants, including alkenes, chlorinated alkenes, aromatics, substituted aromatics, and complex aromatics.

STATUS:

IGT evaluated the CBT process for 2 years under the SITE Emerging Technology Program. The Emerging Technology Bulletin (EPA/540/F-94/540), which details results from the evaluation, is available from EPA. Based on results from the Emerging Technology Program, this technology was invited to participate in the SITE Demonstration Program.

Under the SITE Demonstration Program, IGT plans to conduct a full-scale demonstration of the CBT process on sediments containing PAHs. Different operating scenarios will be used to demonstrate how effectively the CBT process treats sediments in a bioslurry reactor. Several sites are being considered for the demonstration.

FOR FURTHER INFORMATION:

EPA PROJECT MANAGER:
Ronald Lewis
U.S. EPA
National Risk Management Research Laboratory
26 West Martin Luther King Drive
Cincinnati, OH 45268
513-569-7856
Fax: 513-569-7105

TECHNOLOGY DEVELOPER CONTACT:
Robert Kelley
Institute of Gas Technology
1700 South Mount Prospect Road
Des Plaines, IL 60018-1804
847-768-0722
Fax: 847-768-0546

The SITE Program assesses but does not approve or endorse technologies.

INSTITUTE OF GAS TECHNOLOGY
(Fluid Extraction-Biological Degradation Process)

TECHNOLOGY DESCRIPTION:

The three-step, fluid extraction-biological degradation (FEBD) process removes organic contaminants from soil (see figure below). The process combines three distinct technologies: (1) fluid extraction, which removes the organics from contaminated solids; (2) separation, which transfers the pollutants from the extract to a biologically compatible solvent or activated carbon carrier; and (3) biological degradation, which destroys the pollutants and leaves innocuous end-products.

In the fluid extraction step, excavated soils are placed in a pressure vessel and extracted with a recirculated stream of supercritical or near-supercritical carbon dioxide. An extraction cosolvent may be added to enhance the removal of additional contaminants.

During separation, organic contaminants are transferred to a biologically compatible separation solvent, such as water or a water-methanol mixture. The separation solvent is then sent to the final stage of the process, where bacteria degrade the waste to carbon dioxide and water. Clean extraction solvent is then recycled for use in the extraction stage.

Organic contaminants are biodegraded in aboveground aerobic bioreactors, using mixtures of bacterial cultures. Specific cultures are selected based on site contaminant characteristics. For example, if a site is primarily contaminated with polynuclear aromatic hydrocarbons (PAH), cultures able to metabolize or cometabolize these hydrocarbons are used. In this way the bioreactors can be configured to enhance the rate and extent of biodegradation.

Research continues on using bound, activated carbon in a carrier system during the separation step. Bound activated carbon should allow high-pressure conditions to be maintained in the fluid extraction step, resulting in enhanced extraction

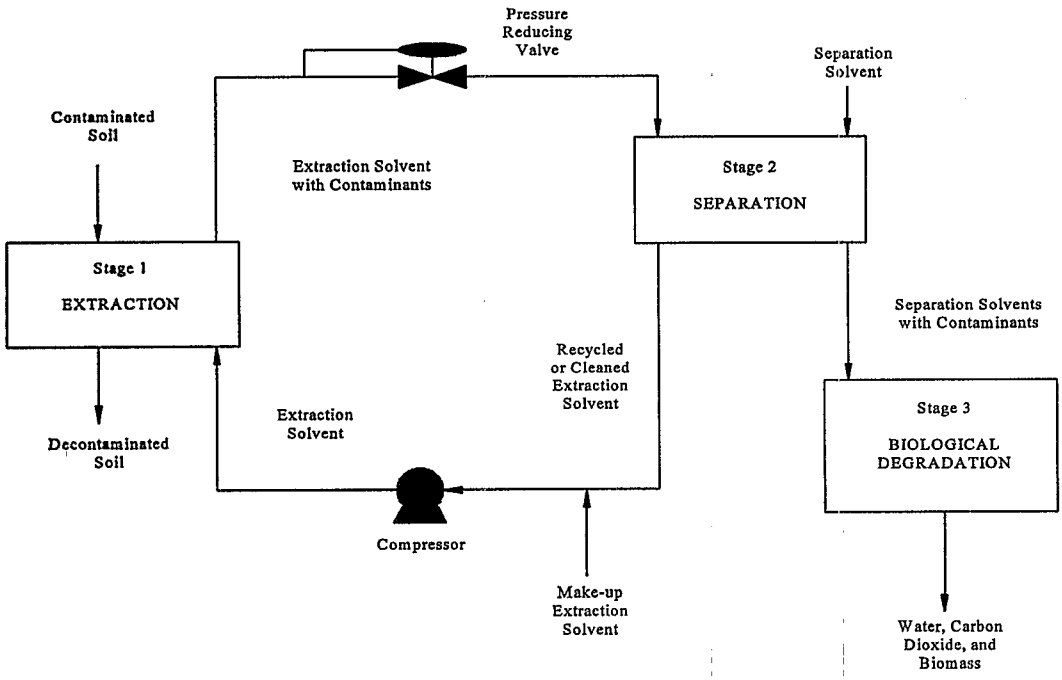

Fluid Extraction-Biological Degradation Process

The SITE Program assesses but does not approve or endorse technologies.

efficiency and decreased extraction time. Bound, activated carbon should also limit the loss of carbon dioxide, thereby decreasing costs. Activated carbon containing the bound PAHs could then be treated in the biodegradation step by converting the carrier system to a biofilm reactor. The activated carbon carrier systems could then be recycled into the high-pressure system of the extraction and separation steps.

WASTE APPLICABILITY:

This technology removes organic compounds from contaminated solids. It is more effective on some classes of organics, such as hydrocarbons (for example, gasoline and fuel oils), than on others, such as halogenated solvents and polychlorinated biphenyls. The process has also been effective in treating nonhalogenated aliphatic hydrocarbons and PAHs.

STATUS:

This technology was accepted into the SITE Emerging Technology Program in June 1990. The Institute of Gas Technology has evaluated all three stages of the technology with soils from a Superfund site and from three other manfactured gas sites. These soils exhibited a variety of physical and chemical characteristics. About 85 to 99 percent of detectable PAHs, including two- to six-ring compounds, were removed from the soils.

The measurable PAHs were biologically converted in both batch-fed and continuously fed, constantly stirred, tank reactors. The conversion rate and removal efficiency were high in all systems. The PAHs were biologically removed or transformed at short hydraulic retention times. All PAHs, including four- to six-ring compounds, were susceptible to biological removal.

Results from this project were published in the Emerging Technology Bulletin (EPA/540/F-94/501), which is available from EPA. An article on the project was also submitted to the *Journal of Air and Waste Management.*

Potential users of the technology have expressed interest in continuing research, and the technology has been invited to participate in the SITE Demonstration Program. The technology would be able to remediate other manufactured gas sites, wood treatment sites, and contaminated soils and sediments.

FOR FURTHER INFORMATION:

EPA PROJECT MANAGER:
Valdis Kukainis
U.S. EPA
National Risk Management Research Laboratory
26 West Martin Luther King Drive
Cincinnati, OH 45268
513-569-7655
Fax: 513-569-7620

TECHNOLOGY DEVELOPER CONTACT:
Robert Paterek
Institute of Gas Technology
1700 South Mount Prospect Road
Des Plaines, IL 60018-1804
847-768-0720
Fax: 847-768-0546

The SITE Program assesses but does not approve or endorse technologies.

INSTITUTE OF GAS TECHNOLOGY
(Fluidized-Bed/Cyclonic Agglomerating Combustor)

TECHNOLOGY DESCRIPTION:

The Institute of Gas Technology (IGT) has developed a two-stage, fluidized-bed/cyclonic agglomerating combustor (AGGCOM) based on a combination of IGT technologies. In the combined system, solid, liquid, and gaseous organic wastes are destroyed efficiently. Solid, nonvolatile, inorganic contaminants are combined within a glassy matrix consisting of discrete pebble-sized agglomerates that are suitable for disposal in a landfill.

The first stage of the combustor is an agglomerating fluidized-bed reactor, which can operate under substoichiometric conditions or with excess air. The system can operate from low temperature (desorption) to high temperature (agglomeration). The system can also gasify materials with high calorific values (for example, municipal solid wastes). With a unique fuel and air distribution, most of the fluidized bed is maintained at 1,500 F° to 2,000 F°, while the central hot zone temperature can be varied between 2,000 F° and 3,000 F°.

When contaminated soils and sludges are fed into the fluidized bed, the combustible fraction of the waste is rapidly gasified and combusted. The solid fraction, containing inorganic and metallic contaminants, undergoes a chemical transformation in the hot zone and is agglomerated into glassy pellets. The pellets are essentially nonleachable under the conditions

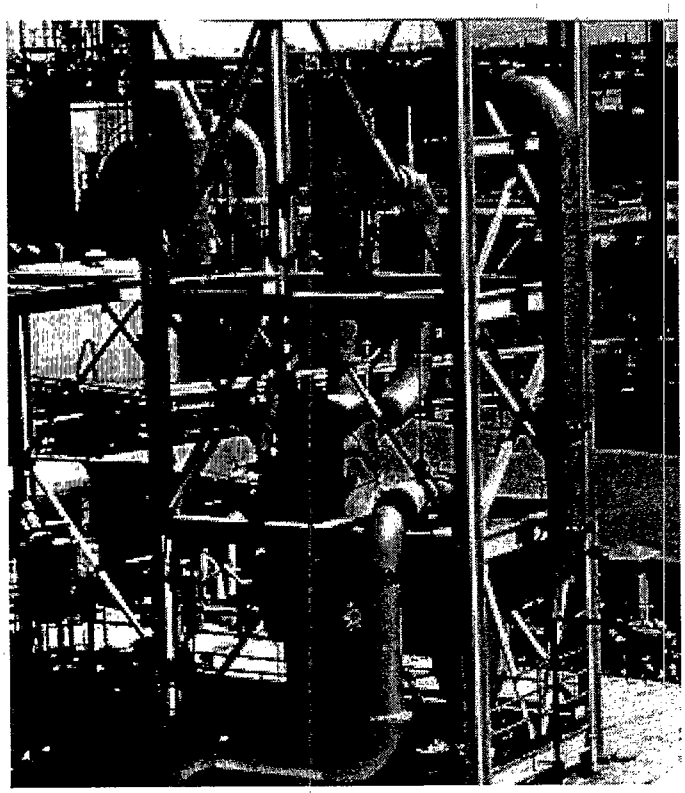

AGGCOM Pilot Plant

The SITE Program assesses but does not approve or endorse technologies.

of the Toxicity Characteristic Leaching Procedure (TCLP). The product gas from the fluidized bed may contain unburned hydrocarbons, furans, dioxins, and carbon monoxide, as well as carbon dioxide and water, which are the products of complete combustion.

Product gas from the fluidized bed is fed into the second stage of the combustor, where it is further combusted at a temperature of 1,800 F° to 2,400 F°. The second stage is a high-intensity cyclonic combustor and separator that provides sufficient residence time (0.25 second) to oxidize carbon monoxide and organic compounds to carbon dioxide and water vapor. This stage has a combined destruction and removal efficiency of greater than 99.99 percent. Volatilized metals are collected downstream in the flue gas scrubber condensate.

The two-stage AGGCOM process is based on IGT's experience with other fluidized-bed and cyclonic combustion systems. The patented sloping-grid design and ash discharge port in this process were initially developed for IGT's U-GAS coal gasification process. The cyclonic combustor and separator is a modification of IGT's low-emissions combustor.

WASTE APPLICABILITY:

The two-stage AGGCOM process can destroy organic contaminants in gaseous, liquid, and solid wastes, including soils and sludges. Gaseous wastes can be fired directly into the cyclonic combustor. Liquid, sludge, and solid wastes can be co-fired directly into the fluidized bed. Solid particles must be less than about 6 millimeters in diameter to support fluidized bed operation; therefore, certain wastes may require grinding or pulverizing prior to remediation.

Because the solid components in the waste are heated above fusion temperature during the agglomeration process, metals and other inorganic materials are encapsulated and immobilized within the glassy matrix.

STATUS:

This technology was accepted into the SITE Emerging Technology Program in July 1990. Tests conducted in the batch, 6-inch-diameter, fluidized bed have demonstrated that agglomerates can be formed from the soil. The agglomerates, produced at several different operating conditions from soil spiked with lead and chromium compounds, passed the TCLP test for leachability.

A pilot-scale combustor with a capacity of 6 tons per day has been constructed (see photograph on previous page), and testing has produced samples of agglomerated soil. Future testing will focus on sustained and continuous operation of the pilot-scale plant using different types of soil, as well as other feedstocks. Tests with organic and inorganic hazardous waste surrogates admixed with the feed soil will also be conducted. A final report on the project has been submitted to EPA.

FOR FURTHER INFORMATION:

EPA PROJECT MANAGER:
Teri Richardson
U.S. EPA
National Risk Management Research Laboratory
26 West Martin Luther King Drive
Cincinnati, OH 45268
513-569-7949
Fax: 513-569-7105

TECHNOLOGY DEVELOPER CONTACTS:
Amir Rehmat or Michael Mensinger
Institute of Gas Technology
1700 South Mount Prospect Road
Des Plaines, IL 60018-1804
847-768-0588 or 847-768-0602
Fax: 847-768-0516
E-mail: arehmat@igt.org or mensing@igt.org

The SITE Program assesses but does not approve or endorse technologies.

INSTITUTE OF GAS TECHNOLOGY
(Supercritical Extraction/Liquid Phase Oxidation)

TECHNOLOGY DESCRIPTION:

The Institute of Gas Technology's (IGT) Supercritical Extraction/Liquid Phase Oxidation (SELPhOx) process (see figure below) removes organic contaminants from soils and sludges and destroys them. SELPhOx combines two processing steps: (1) supercritical extraction (SCE) of organic contaminants, and (2) wet air oxidation (WAO) of the extracted contaminants. The two-step process, linked by a contaminant collection stage, offers great flexibility for removing and destroying both high and low concentrations of organic contaminants.

Combining SCE and WAO in a single two-step process allows development of a highly efficient and economical process for remediating contaminated soils. Supercritical extraction with carbon dioxide (CO_2) removes organic contaminants from the soil while leaving much of the original soil organic matrix in place. The contaminants are collected on activated carbon in a contaminant collection vessel. The activated carbon with sorbed contaminants is then transported in an aqueous stream to a WAO reactor for destruction. Concentrating the organic contaminants on activated carbon in water provides a suitable matrix for the WAO feed stream and improves process economics by decreasing WAO reactor size. The activated carbon is regenerated in the WAO reactor with minimal carbon loss and can be recycled to the contaminant collection vessel.

The SELPhOx process requires only water, air, makeup activated carbon, and the extractant (CO_2). Primary treatment products include cleaned soil, water, nitrogen (from the air fed to the WAO step), and CO_2. Organic sulfur, nitrogen, and chloride compounds that may be present in the original soil or sludge matrix are

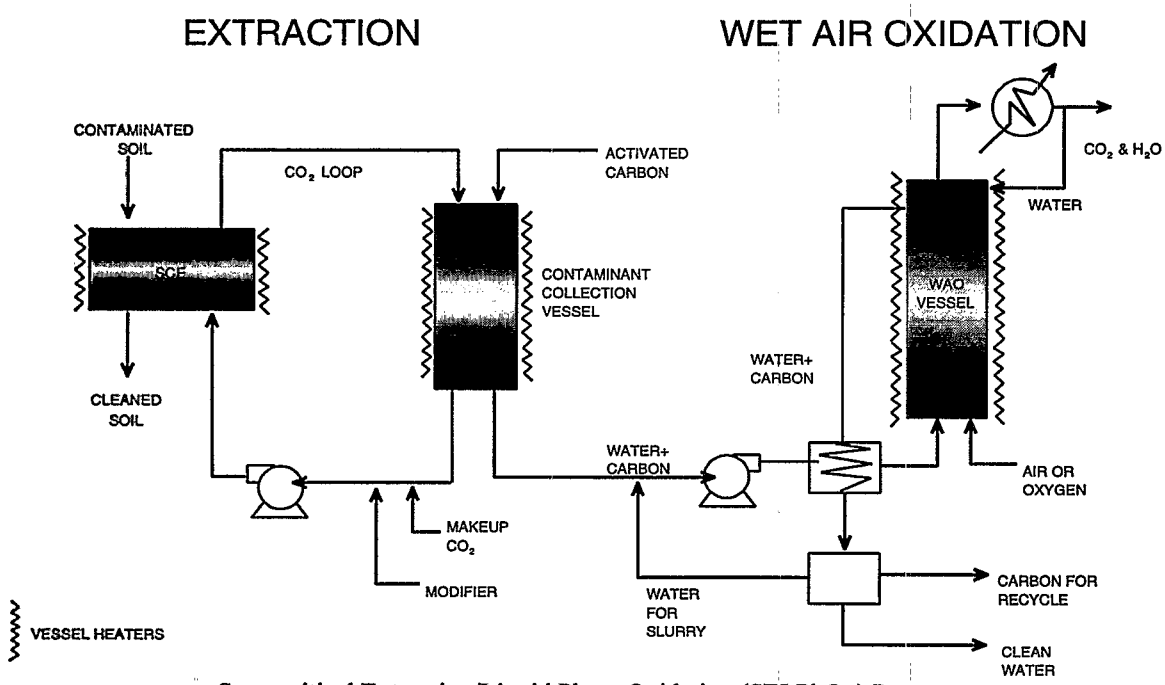

Supercritical Extraction/Liquid Phase Oxidation (SELPhOx) Process

The SITE Program assesses but does not approve or endorse technologies.

transformed to relatively innocuous compounds in the product water. These compounds include sulfuric acid and hydrogen chloride, or their salts. The treated soil can be returned to the original site, and the water can be safely discharged after thermal energy recovery and minor secondary treatment. The gas can be depressurized by a turbo expander for energy recovery and then vented through a filter.

WASTE APPLICABILITY:

The SELPhOx process removes organic contaminants from soils and sludges, including chlorinated and nonchlorinated polynuclear aromatic hydrocarbons (PAH), polychlorinated biphenyls, and other organic contaminants. The process is targeted toward sites that are contaminated with high levels of these organics (hot spots).

The SELPhOx process was accepted into the SITE Emerging Technology Program in July 1994. The primary objectives of the project are to (1) evaluate SCE's contaminant removal efficiency, (2) determine the potential for CO_2 recovery and reuse, and (3) determine destruction efficiencies of extracted contaminants in the WAO process. Analytical results from the project will provide the necessary information for the full-scale process design.

Laboratory-scale SCE tests have been completed using soils contaminated with PAHs. Operating conditions for the SCE stage and the activated carbon adsorption stage have been selected. A transportable field test unit was constructed and tested with PAH-contaminated soil. The final report has yet to be submitted by the developer.

FOR FURTHER INFORMATION:

EPA PROJECT MANAGER:
Valdis R. Kukainis
U.S. EPA
National Risk Management Research Laboratory
26 West Martin Luther King Drive
Cincinnati, OH 45268
513-569-7955
Fax: 513-569-7879

TECHNOLOGY DEVELOPER CONTACT:
Michael Mensinger
ENDESCO Services, Inc.
1700 South Mount Prospect Road
Des Plaines, IL 60018-1804
847-768-0602
Fax: 847-768-0516
E-mail: mensinger @endesco.com

The SITE Program assesses but does not approve or endorse technologies.

IT CORPORATION
(Batch Steam Distillation and Metal Extraction)

TECHNOLOGY DESCRIPTION:

The batch steam distillation and metal extraction treatment process is a two-stage system that treats soils contaminated with organics and inorganics. The system uses conventional, readily available process equipment and does not generate hazardous combustion products. Hazardous materials are separated from soils as concentrates, which can then be disposed of or recycled. Treated soil can be returned to the site.

During treatment, waste soil is slurried in water and heated to 100° C. The heat vaporizes volatile organic compounds (VOC) and produces an amount of steam equal to 5 to 10 percent of the slurry volume. Resulting vapors are condensed and decanted to separate organic contaminants from the aqueous phase. Condensed water from this step can be recycled through the system after soluble organics are removed. The soil is then transferred as a slurry to the metal extraction step.

In the metal extraction step, the soil slurry is washed with hydrochloric acid. Subsequent countercurrent batch washing with water removes residual acid from the soil. The solids are then separated from the final wash solution by gravimetric sedimentation. Most heavy metals are converted to chloride salts in this step. The acid extract stream is then routed to a batch steam distillation system, where excess hydrochloric acid is recovered (see figure below). Bottoms from the still, which contain heavy metals, are precipitated as hydroxide salts and are drawn off as a sludge for off-site disposal or recovery.

As a batch process, this treatment technology is targeted at sites with less than 5,000 tons of soil

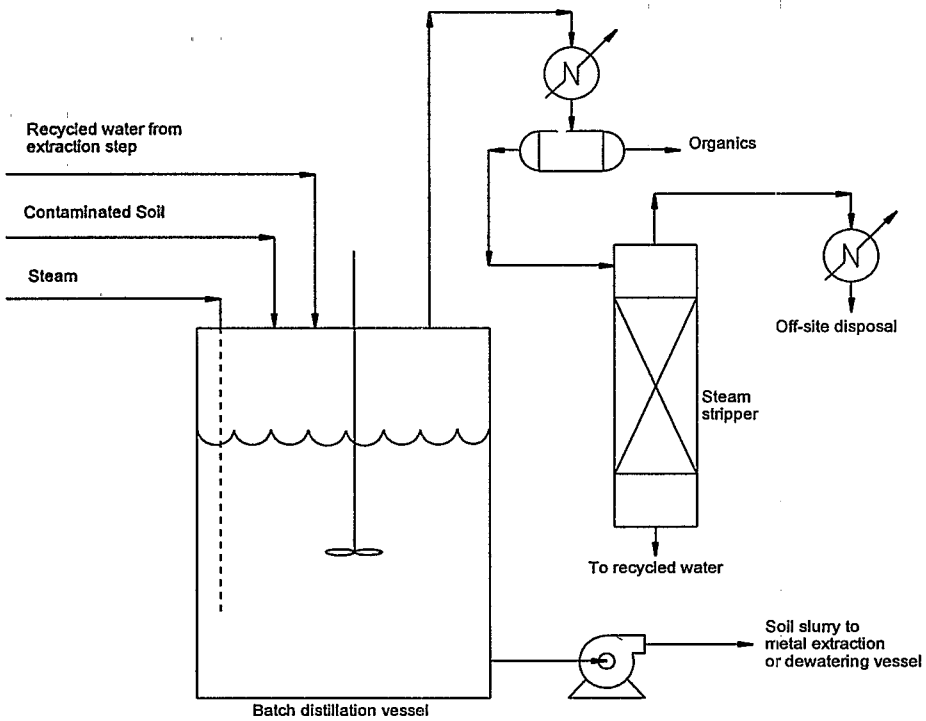

Batch Steam Distillation Step

The SITE Program assesses but does not approve or endorse technologies.

requiring treatment. Processing time depends on equipment size and batch cycle times; about one batch of soil can be treated every 4 hours.

WASTE APPLICABILITY:

This process may be applied to soils and sludges contaminated with organics, inorganics, and heavy metals.

The batch steam distillation and metal extraction process was accepted into the SITE Emerging Technology Program in January 1988. The evaluation was completed in 1992. The Emerging Technology Bulletin (EPA/540/F-95/509), which details results from the test, is available from EPA.

Under the program, three pilot-scale tests have been completed on three soils, for a total of nine tests. The removal rates for benzene, toluene, ethylbenzene, and xylene were greater than 99 percent. The removal rates for chlorinated solvents ranged from 97 to 99 percent. One acid extraction and two water washes resulted in a 95 percent removal rate for heavy metals. Toxicity characteristic leaching procedure tests on the treated soils showed that soils from eight of the nine tests met leachate criteria. Data were also collected on the recovery rate for excess acid and the precipitation rate of heavy metals into a concentrate.

Estimated treatment costs per ton, including capital recovery, for the two treatment steps are shown in the box below.

Batch Steam Distillation	
500-ton site	$299-393/ton
2,500-ton site	$266-350/ton
Metals Extraction (including acid recovery)	
500-ton site	$447-619/ton
2,500-ton site	$396-545/ton

FOR FURTHER INFORMATION:

EPA PROJECT MANAGER:
Ronald Lewis
U.S. EPA
National Risk Management Research Laboratory
26 West Martin Luther King Drive
Cincinnati, OH 45268
513-569-7856
Fax: 513-569-7105

TECHNOLOGY DEVELOPER CONTACT:
Stuart Shealy
IT Corporation
312 Directors Drive
Knoxville, TN 37923-4709
423-690-3211
Fax: 423-694-9573

The SITE Program assesses but does not approve or endorse technologies.

IT CORPORATION

(Chelation/Electrodeposition of Toxic Metals from Soils)

TECHNOLOGY DESCRIPTION:

IT Corporation has conducted laboratory-scale research on an innovative process that removes heavy metals from contaminated soils and sludges by forming a soluble chelate. The metals and the chelating agent are then separated from the soils and recovered.

The treatment employs two key steps (see figure below): (1) a water-soluble chelating agent, such as ethylenediamine tetraacetic acid, bonds with heavy metals and forms a chelate; and (2) an electromembrane reactor (EMR) recovers the heavy metals from the chelate and regenerates the chelating agent.

Soils are screened before the chelation step to remove large particles such as wood, metal scrap, and large rocks.

The chelated soil is dewatered to separate the water-soluble chelating agent from the solid phase. The separated chelating agent, which contains heavy metals, is then treated in the EMR. The EMR consists of an electrolytic cell with a cation transfer membrane separating the cathode and anode chambers.

WASTE APPLICABILITY:

The technology is applicable to a wide variety of metal-contaminated hazardous wastes, including soils and sludges. To date, IT Corporation has demonstrated the technology's effectivenessin removing lead and cadmium from soils and sludges.

STATUS:

This technology was accepted into the SITE Emerging Technology Program in July 1994. The Jack's Creek site, located near Maitland, Pennsylvania, was selected as a site for technology evaluation. The site operated as a precious and nonprecious metal smelting and nonferrous metal recycling operation from 1958 to 1977. A portion of the property is currently operated as a scrap yard. Lead concentrations in the contaminated soil used for the evaluation was

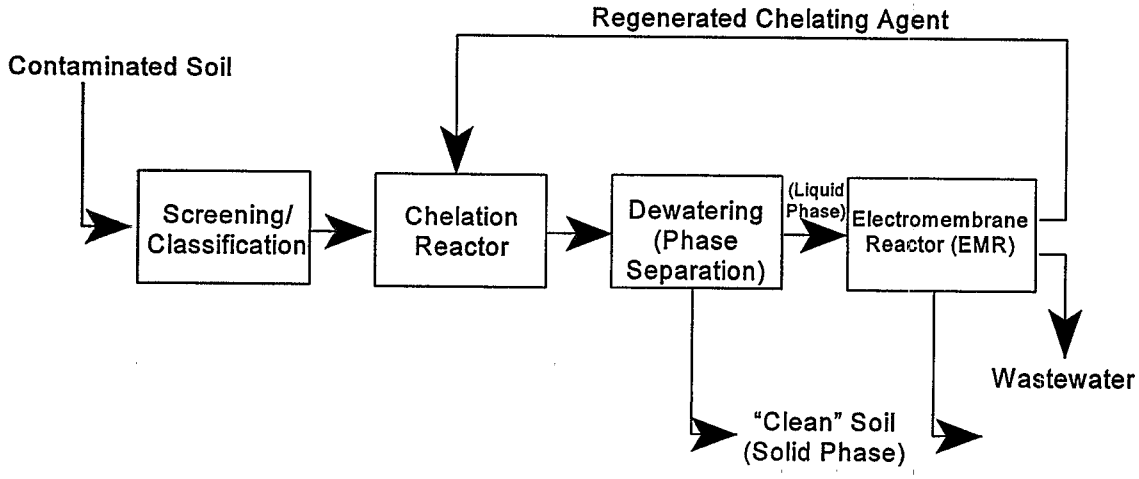

Simplified Process Flow Diagram of Treatment Process

The SITE Program assesses but does not approve or endorse technologies.

approximately 2 percent. Toxicity characteristic leaching procedure (TCLP) analysis on the contaminated soil showed lead levels of 7.7 milligrams per liter (mg/L), which exceeds the regulatory limit of 5 mg/L. During the project, IT Corporation established appropriate conditions for lead removal and recovery from the soil and reduced TCLP concentrations of lead in the soil to below regulatory levels.

FOR FURTHER INFORMATION:

EPA PROJECT MANAGER:
George Moore
U.S. EPA
National Risk Management Research Laboratory
26 West Martin Luther King Drive
Cincinnati, OH 45268
513-569-7991
Fax: 513-569-7276

TECHNOLOGY DEVELOPER CONTACT:
Radha Krishnan
IT Corporation
11499 Chester Road
Cincinnati, OH 45246-4012
513-782-4700
Fax: 513-782-4663

The SITE Program assesses but does not approve or endorse technologies.

IT CORPORATION
(Mixed Waste Treatment Process)

TECHNOLOGY DESCRIPTION:

IT Corporation's mixed waste treatment process integrates thermal desorption, gravity separation, water treatment, and chelant extraction technologies to treat soils contaminated with hazardous and radioactive constituents. The process separates contaminants into distinct organic and inorganic phases that can then be further minimized, recycled, or destroyed at commercial disposal facilities. Decontaminated soil can then be returned to the site. Each technology has been individually demonstrated on selected contaminated materials. The process flow diagram below shows how the technologies have been integrated to treat mixed waste streams.

During the initial treatment step, feed soil is prepared using standard techniques, such as screening, crushing, and grinding to remove oversized material and provide a consistent feed material.

Thermal treatment removes volatile and semi-volatile organics from the soil. Soil is indirectly heated in a rotating chamber, volatilizing the organic contaminants and any moisture in the soil. The soil passes through the chamber and is collected as a dry solid. The volatilized organics and water are condensed into separate liquid phases. The organic phase is decanted and removed for disposal. The contaminated aqueous phase passes through activated carbon, which removes soluble organics, before the aqueous phase is combined with the thermally treated soil.

Inorganic contaminants are removed by three physical and chemical separation techniques: (1) gravity separation of high density particles (2) chemical precipitation of soluble metals and (3) chelant extraction of chemically bound metals.

Gravity separation is used to separate higher density particles from common soil. Radionuclide contaminants are typically found in

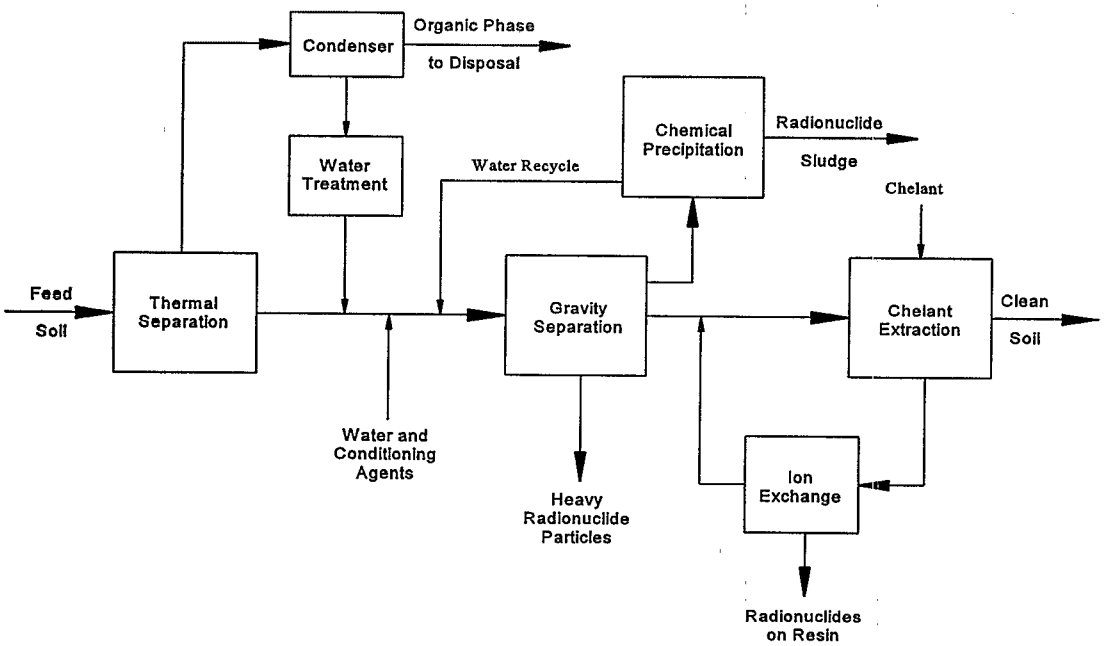

Mixed Waste Treatment Process

The SITE Program assesses but does not approve or endorse technologies.

this fraction. The gravity separation device (such as a shaker table, jig, cone, or spiral) depends on the contaminant distribution and the physical properties of the thermally treated soil.

Many radionuclides and other heavy metals are dissolved or suspended in the aqueous media. These contaminants are separated from the soils and are precipitated. A potassium ferrate formulation precipitates radionuclides. The resulting microcrystalline precipitant is removed, allowing the aqueous stream to be recycled.

Some insoluble radionuclides remain with the soil following the gravity separation process. These radionuclides are removed by chelant extraction. The chelant solution then passes through an ion-exchange resin to remove the radionuclides, and the solution is recycled to the chelant extraction step.

The contaminants are collected as concentrates from all waste process streams for recovery or off-site disposal at commercial hazardous waste or radiological waste facilities. Decontaminated soil can be returned to the site as clean fill.

WASTE APPLICABILITY:

This process treats soils contaminated with organic, inorganic, and radioactive material.

STATUS:

The mixed waste treatment process was selected for the SITE Emerging Technology Program in October 1991. Bench- and pilot-scale testing was completed in late 1995; a report detailing evaluation results was made available from EPA in 1997. Individual components of the treatment process have been demonstrated on various wastes from the U.S. Department of Energy, (DOE), the U.S. Department of Defense, and commercial sites. Thermal separation has removed and recovered polychlorinated biphenyls from soils contaminated with uranium and technetium. These soils were obtained from two separate DOE gaseous diffusion plants.

Gravity separation of radionuclides has been demonstrated at pilot scale on Johnston Atoll in the Pacific Ocean. Gravity separation successfully removed plutonium from native soils.

Water treatment using potassium ferrate formulations has been demonstrated at several DOE facilities in laboratory- and full-scale tests. This treatment approach reduced cadmium, copper, lead, nickel, plutonium, silver, uranium, and zinc to dischargeable levels.

Chelant extraction has successfully treated surface contamination in the nuclear industry for more than 20 years. Similar results are expected for subsurface contamination.

FOR FURTHER INFORMATION:

EPA PROJECT MANAGER:
Douglas Grosse
U.S. EPA
National Risk Management Research Laboratory
26 West Martin Luther King Drive
Cincinnati, OH 45268
513-569-7844
Fax: 513-569-7585

TECHNOLOGY DEVELOPER CONTACT:
Ed Alperin
IT Corporation
312 Directors Drive
Knoxville, TN 37923-4709
423-690-3211
Fax: 423-694-9573

The SITE Program assesses but does not approve or endorse technologies.

IT CORPORATION
(Photolytic and Biological Soil Detoxification)

TECHNOLOGY DESCRIPTION:

This technology is a two-stage, in situ photolytic and biological detoxification process designed for shallow soil contamination. The first step in the process degrades the organic contaminants with ultraviolet (UV) radiation. The photolytic degradation rate is several times faster with artificial UV light than with natural sunlight. The degradation process is enhanced by adding detergent-like chemicals (surfactants) to mobilize the contaminants. Photolysis of the contaminants converts them to more easily degraded compounds. Periodic sampling and analysis determines when photolysis is complete. Biodegradation, the second step, further destroys organic contaminants and detoxifies the soil.

When sunlight is used to treat shallow soil contamination, the soil is first tilled with a power tiller and sprayed with surfactant. The soil is tilled frequently to expose new surfaces and sprayed often to promote the degradation process. Water may also be added to maintain soil moisture.

When UV lights are used, parabolic reflectors suspended over the soil increase the amount of UV irradiation (see figure below). After photolysis is complete, biodegradation is enhanced by adding microorganisms and nutrients and further tilling the soil.

When these techniques are applied to soils with deep contamination, the soil must be excavated and treated in a specially constructed shallow treatment basin that meets Resource Conservation and Recovery Act requirements. When soil contamination is shallow, photolysis and housing prevent contaminants from migrating to groundwater.

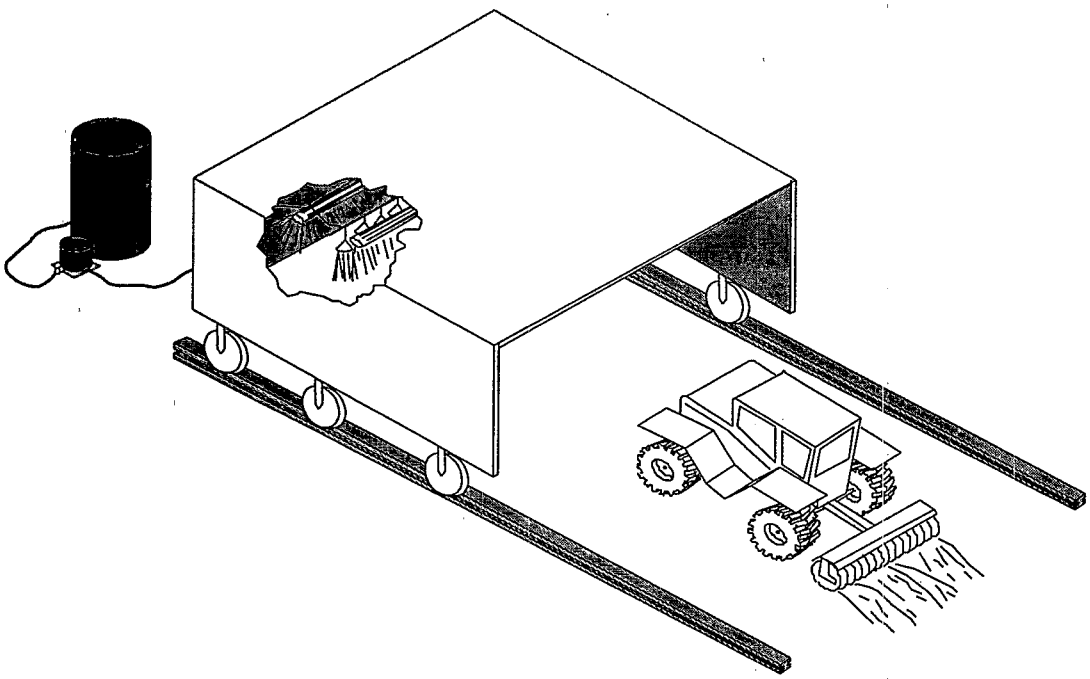

Photolytic Degradation Process Using UV Lights

The SITE Program assesses but does not approve or endorse technologies.

The only treatment residuals of the process are soil contaminated with surfactants and the end metabolites of the biodegradation processes.

The end metabolites depend on the original contaminants. The surfactants are common materials used in agricultural formulations, the soils can be left on site.

WASTE APPLICABILITY:

This photolytic and biological soil detoxification process destroys organics, particularly dioxins such as tetrachlorodibenzo-p-dioxin (TCDD), polychlorinated biphenyls (PCB), other polychlorinated aromatics, and polynuclear aromatic hydrocarbons.

STATUS:

This technology was accepted into the SITE Emerging Technology Program in 1989; the evaluation was completed in 1992. The Emerging Technology Report (PB95-159992) is available for purchase from the National Technical Information Services. The Emerging Technology Bulletin (EPA/540/F-94/502) and Emerging Technology Summary (EPA/540/SR-94/531) are available from EPA.

Bench-scale tests conducted on dioxin-contaminated soil showed that the effectiveness of surface irradiation to degrade TCDDs or PCBs is strongly influenced by soil type. Early tests on sandy soils showed greater than 90 percent removals for both TCDDs and PCBs. Using a 450-watt mercury lamp, the irradiation time was more than 20 hours for greater than 90 percent destruction of TCDD and more than 4 hours for greater than 90 percent destruction of PCBs. However, a high humic content decreased the effectiveness of the UV photolysis. Soil contaminated with PCBs in the bench-scale tests had a high clay content. The highest removal rate for these soils was 30 percent, measured over a 16-hour irradiation time. Bench-scale tests used a medium-pressure, mercury UV lamp; sunlight was ineffective. No significant improvement in PCB destruction was achieved using a pulsed UV lamp.

The process was also tested with Fenton's reagent chemistry as an alternate method of degrading PCBs to more easily biodegraded compounds. PCB destruction ranged from nondetectable to 35 percent. Data indicates that no significant change in PCB chlorine levels occurred during treatment.

Other studies examined PCB biodegradation in (1) soil treated with a surfactant and UV radiation, (2) untreated soil, and (3) soil known to have PCB-degrading microorganisms. Study results were as follows:

- PCB removal in the UV-treated soil, untreated soil, and soil with known biological activity was higher when augmented with an isolated PCB degrading microorganism.
- In the untreated soil, biphenyl was more efficient at inducing PCB degradation than 4-bromobiphenyl.
- For the treated soil, surfactant treatment may have inhibited microbial activity due to high total organic carbon and low pH.

Isolation and enrichment techniques have made it possible to isolate microorganisms capable of biodegrading PCBs in contaminated soil.

FOR FURTHER INFORMATION:

EPA PROJECT MANAGER:
Randy Parker
U.S. EPA
National Risk Management Research Laboratory
26 West Martin Luther King Drive
Cincinnati, OH 45268
513-569-7271
Fax: 513-569-7571

TECHNOLOGY DEVELOPER CONTACT:
Duane Graves
IT Corporation
312 Directors Drive
Knoxville, TN 37923-4709
423-690-3211
Fax: 423-694-3626

The SITE Program assesses but does not approve or endorse technologies.

IT CORPORATION
(Tekno Associates Bioslurry Reactor)

TECHNOLOGY DESCRIPTION:

IT Corporation (IT) has used the Bioslurry Reactor (developed by Tekno Associates of Salt Lake City, Utah) to treat polynuclear aromatic hydrocarbons (PAH) in soil. Traditional biological treatments, such as landfarming and in situ bioremediation, may not reduce PAHs in soil to target levels in a timely manner. Slurry reactors are more efficient for bioremediation and are more economical than thermal desorption and incineration.

During the project, IT operated one 10-liter and two 60-liter bioslurry reactors (see figure below) in semicontinuous, plug-flow mode. The first 60-liter reactor received fresh feed daily and supplements of salicylate and succinate.

Succinate is a by-product of naphthalene metabolism and serves as a general carbon source. Salicylate induces naphthalene degradation of PAH plasmids in the microorganisms. The system has been shown to degrade phenanthrene and anthracene. The naphthalene pathway may also play a role in carcinogenic PAH (CPAH) metabolism.

The first 60-liter reactor removed easily degradable carbon and increased biological activity against more recalcitrant PAHs (three-ring compounds and higher).

Effluent from the first reactor overflowed to the second 60-liter reactor in series, where Fenton's reagent (hydrogen peroxide and iron salts) was added to accelerate oxidation for four- to six-ring

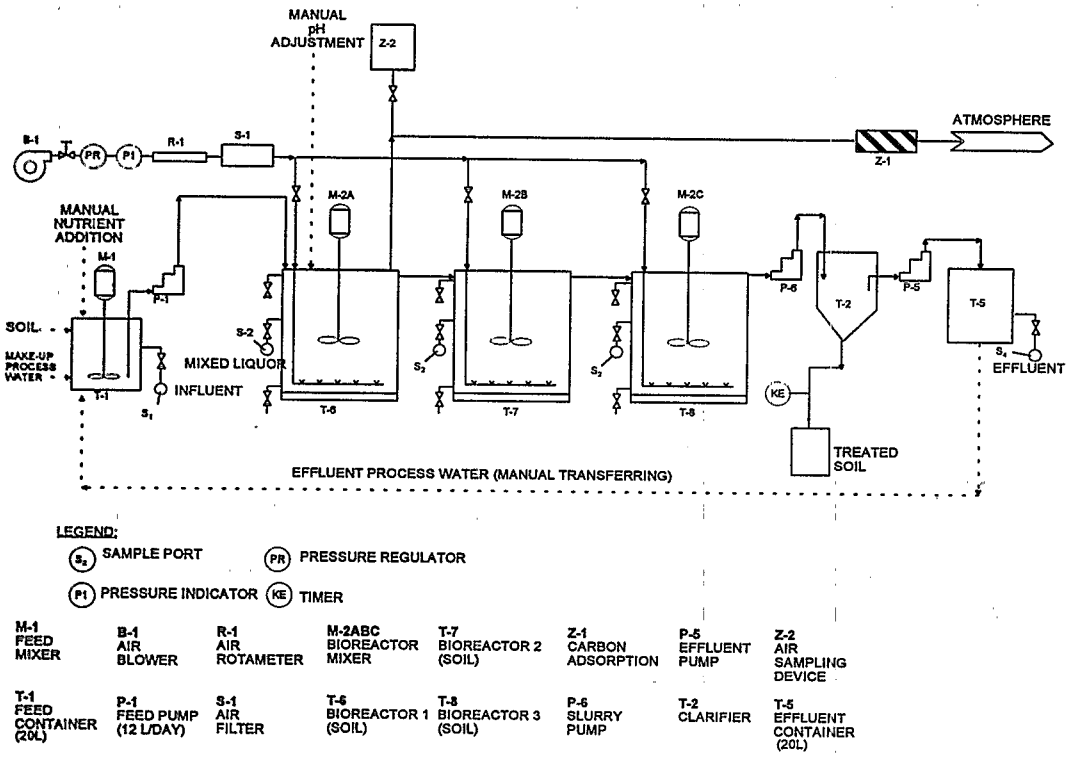

Tekno Associates Bioslurry Reactor System

The SITE Program assesses but does not approve or endorse technologies.

PAHs. Fenton's reagent produces a free radical that can oxidize multiring aromatic hydrocarbons.

The T-8 reactor (third in a series) was used as a polishing reactor to remove any partially oxidized contaminants remaining after treatment with Fenton's reagent. Slurry was removed from this reactor and clarified using gravity settling techniques.

The reactors increased the rate and extent of PAH biodegradation, making bioslurry treatment of soils and sludges a more effective and economical remediation option.

WASTE APPLICABILITY:

This technology is applicable to PAH-contaminated soils and sludges that can be readily excavated for slurry reactor treatment. Soils from coal gasification sites, wood-treating facilities, petrochemical facilities, and coke plants are typically contaminated with PAHs.

STATUS:

This technology was accepted into the SITE Emerging Technology Program in 1993. Under this program, IT Corporation conducted a pilot-scale investigation of the three slurry reactors operating in series. A suitable soil for the pilot-scale test was obtained from a wood-treating facility in the southeastern United States. About 4,000 pounds of PAH-contaminated soil was screened and treated during 1994. CPAH and PAH removals were demonstrated at 84 and 95 percent, respectively. A final report was available from EPA in 1997.

FOR FURTHER INFORMATION:

EPA PROJECT MANAGER:
Brunilda Dávila
U.S. EPA
National Risk Management Research Laboratory
26 West Martin Luther King Drive
Cincinnati, OH 45268
513-569-7849
Fax: 513-569-7620

TECHNOLOGY DEVELOPER CONTACT:
Kandi Brown
IT Corporation
312 Directors Drive
Knoxville, TN 37923
423-690-3211
Fax: 423-690-3626

The SITE Program assesses but does not approve or endorse technologies.

KSE, INC.

(Adsorption-Integrated-Reaction Process)

TECHNOLOGY DESCRIPTION:

The Adsorption-Integrated-Reaction (AIR 2000) process combines two unit operations, adsorption and chemical reaction, to treat air streams containing dilute concentrations of volatile organic compounds (VOC) (see photograph below).

The contaminated air stream containing dilute concentrations of VOCs flows into a photocatalytic reactor, where chlorinated and nonchlorinated VOCs are destroyed. The VOCs are trapped on the surface of a proprietary catalytic adsorbent. This catalytic adsorbent is continuously illuminated with ultraviolet light, destroying the trapped, concentrated VOCs through enhanced photocatalytic oxidation. This system design simultaneously destroys VOCs and continuously regenerates the catalytic adsorbent. Only oxygen in the air is needed as a reactant. The treated effluent air contains carbon dioxide and water, which are carried out in the air stream exiting the reactor. For chlorinated VOCs, the chlorine atoms are converted to hydrogen chloride with some chlorine gas. If needed, these gases can be removed from the air stream with conventional scrubbers and adsorbents.

The AIR 2000 process offers advantages over other photocatalytic technologies because of the high activity, stability, and selectivity of the photocatalyst. The photocatalyst, which is not primarily titanium dioxide, contains a number of different semiconductors, which allows for rapid and economical treatment of VOCs in air. Previous results indicate that the photocatalyst is highly resistant to deactivation, even after thousands of hours of operation in the field.

The particulate-based photocatalyst allows for more freedom in reactor design and more economical scale-up than reactors with a catalyst film coated on a support medium. Packed beds, radial flow reactors, and monolithic reactors are all feasible reactor designs. Because the catalytic adsorbent is continuously regenerated, it does not require disposal or removal for regeneration, as traditional carbon adsorption typically does. The AIR 2000 process produces no residual wastes or by-products needing further treatment or disposal as hazardous waste. The treatment system is self-contained and mobile, requires a small amount of space, and requires less energy than thermal incineration or catalytic oxidation. In addition, it has lower total system costs than

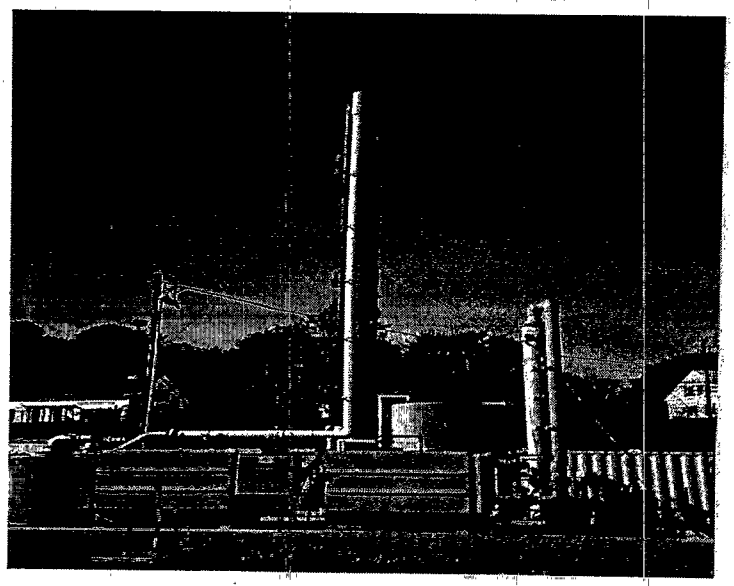

AIR2000

The SITE Program assesses but does not approve or endorse technologies.

these traditional technologies, and can be constructed of fiberglass reinforced plastic (FRP) due to the low operating temperatures.

WASTE APPLICABILITY:

The AIR 2000 process is designed to treat a wide range of VOCs in air, ranging in concentration from less than 1 to as many as thousands of parts per million. The process can destroy the following VOCs: chlorinated hydrocarbons, aromatic and aliphatic hydrocarbons, alcohols, ethers, ketones, and aldehydes.

The AIR 2000 process can be integrated with existing technologies, such as thermal desorption, air stripping, or soil vapor extraction, to treat additional media, including soils, sludges, and groundwater.

STATUS:

The AIR 2000 process was accepted into the SITE Emerging Technology Program in 1995. Studies under the Emerging Technology Program are focusing on (1) developing photocatalysts for a broad range of chlorinated and nonchlorinated VOCs, and (2) designing advanced and cost-effective photocatalytic reactors for remediation and industrial service.

The AIR 2000 Process was initially evaluated at full-scale operation for treatment of soil vapor extraction off-gas at Loring Air Force Base (AFB). Destruction efficiency of tetrachloroethene exceeded 99.8 percent. The performance results were presented at the 1996 World Environmental Congress.

The AIR-I process, an earlier version of the technology, was demonstrated as part of a groundwater remediation demonstration project at Dover AFB in Dover, Delaware, treating effluent air from a groundwater stripper. Test results showed more than 99 percent removal of dichloroethane (DCA) from air initially containing about 1 ppm DCA and saturated with water vapor.

A 700 SCFM commercial unit is now operating at a Superfund Site in Rhode Island, destroying TCE, DCE and vinyl chloride in the combined off-gas from a SVE system and a groundwater stripper. Preliminary results show that the system is operating at 99.99% destruction efficiency. The AIR 2000 unit is operating unattended, with the number of UV lamps being illuminated changing automatically in response to changing flow conditions for maximum performance at minimum cost.

The AIR 2000 Process was accepted into the SITE Demonstration program in 1998, with the objective of demonstrating the performance of the system at the Superfund site in Rhode Island.

FOR FURTHER INFORMATION:

EPA PROJECT MANAGER:
Vince Gallardo
U.S. EPA
National Risk Management Research Laboratory
26 West Martin Luther King Drive
Cincinnati, OH 45268
513-569-7176
Fax: 513-569-7620
E-mail: gallardo.vincente@epamail.epa.gov

TECHNOLOGY DEVELOPER CONTACT:
J.R. Kittrell
KSE, Inc.
P.O. Box 368
Amherst, MA 01004
413-549-5506
Fax: 413-549-5788
e-mail: kseinc@aol.com

TECHNOLOGY LICENSEE CONTACT:
Dr. Bill de Waal
Trojan Technologies, Inc.
3020 Gore Road
London, Ontario N5V-4T7
CANADA
519-457-3400
Fax: 519-457-3030

The SITE Program assesses but does not approve or endorse technologies.

LEWIS ENVIRONMENTAL SERVICES, INC./ HICKSON CORPORATION

(Chromated Copper Arsenate Soil Leaching Process)

TECHNOLOGY DESCRIPTION:

Lewis Environmental Services, Inc. (Lewis), has developed a soil leaching process to remediate soils contaminated with inorganics and heavy metals, including chromium, copper, cadmium, mercury, arsenic, and lead.

The soil leaching process consists of leaching contaminated soil in a countercurrent stirred reactor system (see figure below). A screw feeder delivers soil into the reactor, where it is leached with sulfuric acid for 30 to 60 minutes. The sulfuric acid solubilizes the inorganics and heavy metals into the leaching solution. Any organic contaminants are separated and decanted from the leaching solution, using strong acid leachate, space separation, and skimming. The processed soil is then washed with water and air-dried.

The wash water is then treated with the Lewis' ENVIRO-CLEAN, which consists of a granulated activated carbon system followed by an electrolytic recovery system. The ENVIRO-CLEAN recovers heavy metals from the leaching solution and wash water and produces an effluent that meets EPA discharge limits for heavy metals. The treated wash water can then be reused in the soil washing step. The leaching solution can be returned directly to the stirred reactor system, depending on its metals concentration.

Contaminated soil must be properly sized and screened to facilitate leaching in the stirred reactor system. Large pieces of debris such as rocks, wood, and bricks must be removed before treatment. Standard screening and classification equipment, such as that used in municipal waste treatment plants, is suitable for this purpose.

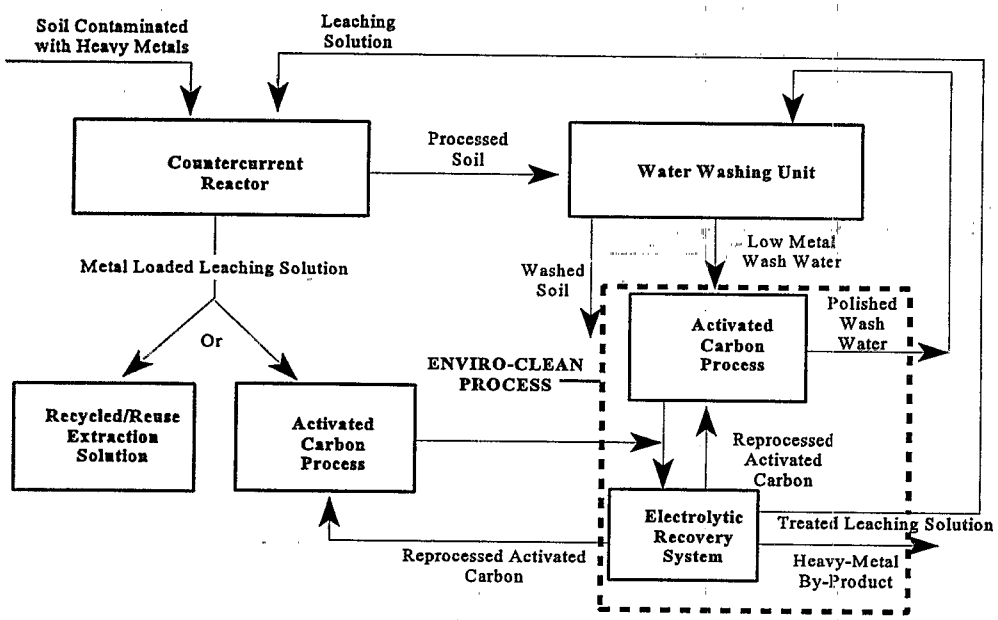

Chromated Copper Arsenate Soil Leaching Process

The SITE Program assesses but does not approve or endorse technologies.

The soil leaching process does not generate appreciable quantities of treatment by-products or waste streams containing heavy metals. The treated soil meets toxicity characteristic leaching procedure (TCLP) criteria and can be either returned to the site or disposed of at a nonhazardous landfill. The granular activated carbon requires disposal after about 20 to 30 treatment cycles and should also meet TCLP criteria. Heavy metals recovered by the ENVIRO-CLEAN process can be reused by industry.

WASTE APPLICABILITY:

The soil leaching process can treat wastes generated by the wood preserving and metal plating industries, battery waste sites, and urban lead sites.

STATUS:

The soil leaching process was accepted into the Emerging Technology Program in 1993. Laboratory-scale tests have shown that the process successfully treats soil contaminated with chromated copper arsenate (CCA). The evaluation of the technology under the SITE Program was completed in September 1996. Results from the evaluation was made available in 1997.

In 1992, Lewis treated a 5-gallon sample of CCA-contaminated soil from a Hickson Corporation (Hickson), a major CCA chemical manufacturer. The treated soil met TCLP criteria, with chromium and arsenic, the two main leaching solution constituents, averaging 0.8 and 0.9 milligram per kilogram (mg/kg) respectively.

Analysis also revealed 3,330 milligrams per liter (mg/L) of chromium; 13,300 mg/L of copper; and 22,990 mg/L of iron in the leaching solution. In addition, analysis indicated 41.4 mg/L of chromium, 94.8 mg/L of copper, and 3.0 mg/L of arsenic in the wash water. After treatment, the wash water contained metals levels below 0.01 mg/L for copper and chromium and 0.3 mg/L for arsenic.

Lewis plans further laboratory-scale testing at its faculty in Pittsburgh, Pennsylvania, followed by bench- or pilot-scale testing at Hickson's facility in Conley, Georgia.

FOR FURTHER INFORMATION:

EPA PROJECT MANAGER:
Randy Parker
U.S. EPA
National Risk Management Research Laboratory
26 West Martin Luther King Drive
Cincinnati, OH 45268
513-569-7271
Fax: 513-569-7571

TECHNOLOGY DEVELOPER CONTACT:
Tom Lewis III
Lewis Environmental Services, Inc.
R.J. Casey Industrial Park
Preble and Columbus Streets
Pittsburgh, PA 15233
412-322-8100
Fax: 412-322-8109

The SITE Program assesses but does not approve or endorse technologies.

MEDIA & PROCESS TECHNOLOGY
(formerly ALUMINUM COMPANY OF AMERICA andALCOA SEPARATION TECHNOLOGY, INC.)
(Bioscrubber)

TECHNOLOGY DESCRIPTION:

This bioscrubber technology digests hazardous organic emissions generated by soil, water, and air decontamination processes. The bioscrubber consists of a filter with an activated carbon medium that supports microbial growth. This unique medium, with increased microbial population and enhanced bioactivity, converts diluted organics into carbon dioxide, water, and other nonhazardous compounds. The filter removes biomass, supplies nutrients, and adds moisture. A pilot-scale unit with a 4-cubic-foot-per-minute capacity is being field-tested (see figure below).

In addition to efficient degradation, the bioscrubber provides an effective sink to mitigate feed fluctuations. During an 11-month bench-scale test, the bioscrubber consistently removed contaminants such as petroleum hydrocarbons, alcohols, ketones, and amines from the waste feed at levels ranging from less than 5 to 40 parts per million (ppm).

The bioscrubber provides several advantages over conventional activated carbon adsorbers. First, bioregeneration keeps the maximum adsorption capacity constantly available; thus, the mass transfer zone remains stationary and relatively short. The carbon does not require refrigeration, and the required bed length is greatly reduced, thereby reducing capital and operating expenses. Finally, the chromatographic effect (premature desorption) common in an adsorber is eliminated because the maximum capacity is available constantly. The bioscrubber's advantages are fully exploited

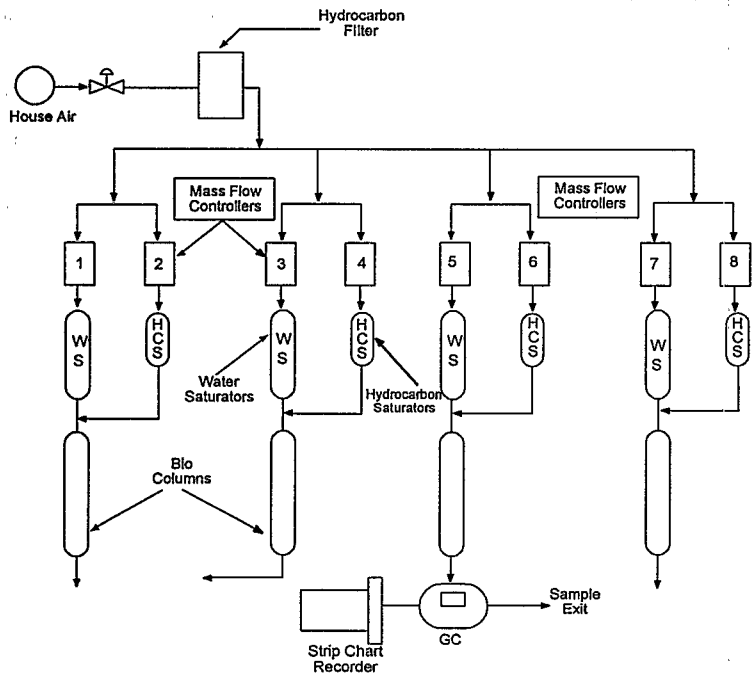

Bioscrubber Pilot-Scale Unit

The SITE Program assesses but does not approve or endorse technologies.

when the off-gas contains weakly adsorbedcontaminants, such as methylene chloride, or adsorbates competing with moisture in the stream. The bioscrubber may replace activated carbon in some applications.

WASTE APPLICABILITY:

The bioscrubber technology removes organic contaminants in air streams from soil, water, or air decontamination processes. The technology is especially suited to treat streams containing aromatic solvents, such as benzene, toluene, and xylene, as well as alcohols, ketones, hydrocarbons, and others. The technology has several applications to Superfund sites, including (1) organic emission control for groundwater decontamination using air strippers, (2) emission control for biological treatment of ground and surface water, and (3) emission control for soil decontamination. These primary treatment processes have not been designed to prevent volatile organic compound discharges into the atmosphere. The bioscrubber is an ideal posttreatment component for these processes because it handles trace organic volatiles economically and effectively.

STATUS:

This technology was accepted into the SITE Emerging Technology Program in July 1990. Bench-scale bioscrubbers operated continuously for more than 11 months to treat an air stream with trace concentrations of toluene at about 10 to 20 ppm. The bioscrubbers accomplished a removal efficiency of greater than 95 percent. The filter had a biodegradation efficiency 40 to 80 times greater than existing filters. The project was completed in June 1993. Based on results from the Emerging Technology Program, the bioscrubber technology was invited to participate in the SITE Demonstration Program.

Evaluation results have been published in the report "Bioscrubber for Removing Hazardous Organic Emissions from Soil, Water and Air Decontamination Processes" (EPA/540/R-93/521). This report is available from the National Technical Information Service. The Emerging Technology Bulletin (EPA/540/F-93/507) and the Emerging Technology Summary (EPA/540/SR-93/521) are available from EPA. An article on the technology was also published in the *Journal of Air and Waste Management*, Volume 44, March 1994, pp. 299-303.

The pilot-scale unit has also been tested on discharge from an air stripping tower at a flow rate of 2 standard cubic feet per minute. The discharge contained from less than 10 to 200 ppm toluene. The unit demonstrated the effectiveness, efficiency, and reliability of its design. Additional tests are underway to confirm results at higher flow rates and with other contaminants.

FOR FURTHER INFORMATION:

EPA PROJECT MANAGER:
Paul dePercin
U.S. EPA
National Risk Management Research Laboratory
26 West Martin Luther King Drive
Cincinnati, OH 45268
513-569-7797
Fax: 513-569-7105
E-Mail: dePercin.Paul@epamail.epa.gov

TECHNOLOGY DEVELOPER CONTACT:
Paul Liu
Media and Process Technology, Inc.
1155 William Pitt Way
Pittsburgh, PA 15238
412-826-3711
Fax: 412-826-3720

The SITE Program assesses but does not approve or endorse technologies.

MEMBRANE TECHNOLOGY AND RESEARCH, INC.
(VaporSep® Membrane Process)

TECHNOLOGY DESCRIPTION:

The Membrane Technology and Research, Inc., VaporSep® system, shown in the figure below, uses synthetic polymer membranes to remove organic vapors from contaminated air streams. The process generates a clean air stream and a liquid organic stream.

Air laden with organic compounds contacts one side of a membrane that is 10 to 100 times more permeable to the organic compound than to air. The membrane separates the air into two streams: a permeate stream containing most of the organic vapor and a clean residual air stream. The organic vapor is condensed and removed as a liquid; the purified air stream may be vented or recycled.

The VaporSep® system maintains a lower vapor pressure on the permeate side of the membrane to drive the permeation process. This pressure difference can be created by either compressing the feed stream or using a vacuum pump on the permeate stream.

The VaporSep® systems built to date range in capacity from 1 to 700 standard cubic feet per minute. The systems are significantly smaller than carbon adsorption systems of similar capacity and can be configured for a wide range of feed flow rates and compositions. The process has been tested on air streams contaminated with a wide range of organic compounds at concentrations of 100 to more than 100,000 parts per million.

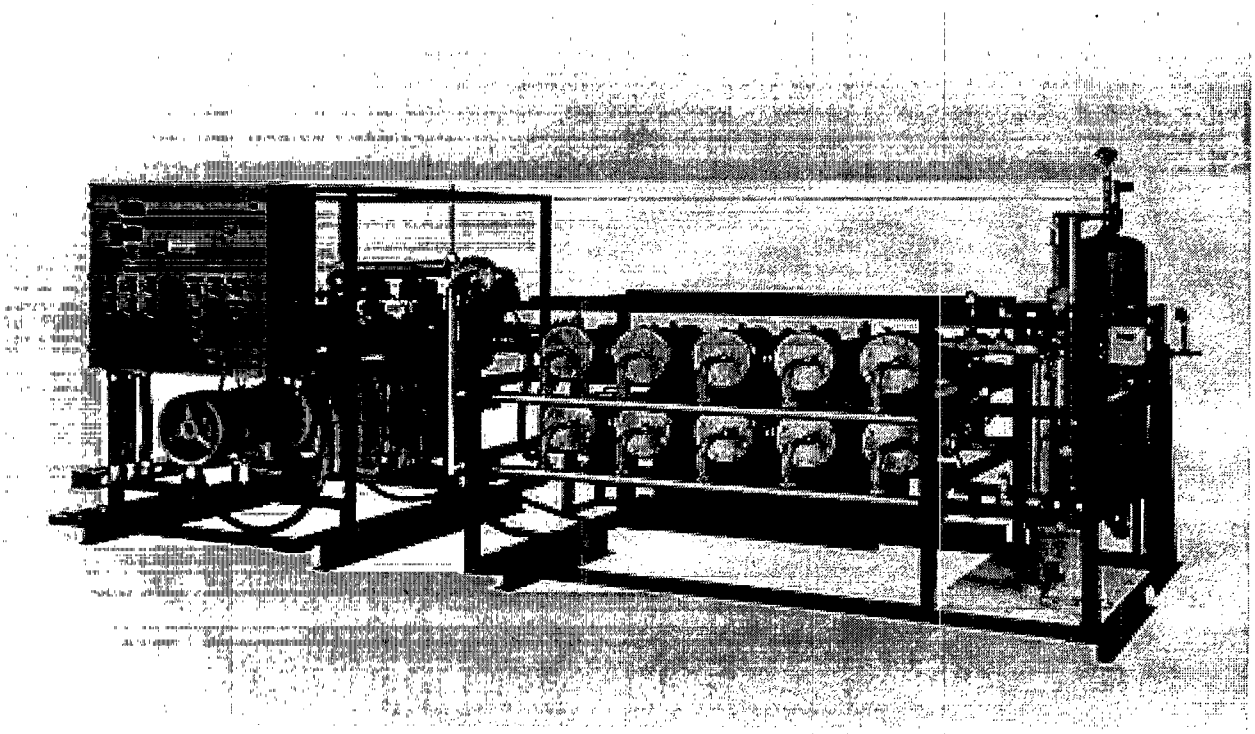

VaporSep® Membrane Organic Vapor Recovery System

The SITE Program assesses but does not approve or endorse technologies.

The VaporSep® system removes between 90 and 99 percent of the organic vapor, depending on the class of organic compound and the system design. The system produces a purified air stream and a small volume of organic condensate. The concentration of organics in the purified air stream is generally low enough for discharge to the atmosphere.

WASTE APPLICABILITY:

VaporSep® systems can treat most air streams containing flammable or nonflammable halogenated and nonhalogenated organic compounds, including chlorinated hydrocarbons, chlorofluorocarbons (CFC), and fuel hydrocarbons. Typical applications include the following:

- Reduction of process vent emissions, such as those regulated by EPA source performance standards for the synthetic organic chemical manufacturing industry
- Treatment of air stripper exhaust before discharge to the atmosphere
- Recovery of CFCs and hydro-chlorofluorocarbons
- Recovery of valuable organic feedstocks for recycling to the process
- Recovery of gasoline vapors

STATUS:

This technology was accepted into the SITE Emerging Technology Program in 1989; the project was completed in 1991. The process, demonstrated at both the bench and pilot scales, achieved removal efficiencies of over 99.5 percent for selected organic compounds. The Emerging Technology Bulletin (EPA/540/F-94/503) is available from EPA.

Almost 40 VaporSep® systems have been supplied to customers in the United States and overseas for applications such as the following:

- CFC and halocarbon recovery from process vents and transfer operations
- CFC recovery from refrigeration systems
- Vinyl chloride monomer recovery from polyvinyl chloride manufacturing operations
- CFC-12/ethylene oxide recovery from sterilizer emissions
- Recovery of monomers, other hydrocarbons, and nitrogen in polyolefin degassing processes

A VaporSep® system successfully treated an air stream from a soil vacuum extraction operation at a U.S. Department of Energy site.

FOR FURTHER INFORMATION:

EPA PROJECT MANAGER:
Paul dePercin
U.S. EPA
National Risk Management Research Laboratory
26 West Martin Luther King Drive
Cincinnati, OH 45268
513-569-7797
Fax: 513-569-7105
E-Mail: dePercin.Paul@epamail.epa.gov

TECHNOLOGY DEVELOPER CONTACTS:
Marc Jacobs
Doug Gottschlich
Membrane Technology and Research, Inc.
1360 Willow Road
Menlo Park, CA 94025-1516
415-328-2228
Fax: 415-328-6580
E-mail: mjacobs@mtrinc.com

The SITE Program assesses but does not approve or endorse technologies.

MONTANA COLLEGE OF MINERAL SCIENCE AND TECHNOLOGY

(Air-Sparged Hydrocyclone)

TECHNOLOGY DESCRIPTION:

The air-sparged hydrocyclone (ASH) was developed at the University of Utah during the early 1980s to achieve fast flotation of fine particles in a centrifugal field. The ASH consists of two concentric right-vertical tubes with a conventional cyclone header at the top and a froth pedestal at the bottom (see figure below). The inner tube is a porous tube through which air is sparged. The outer tube serves as an air jacket to evenly distribute air through the porous inner tube.

Slurry is fed tangentially through the conventional cyclone header to develop a swirl flow of a certain thickness in the radial direction (the swirl-layer thickness). The swirl is discharged through an annular opening between the porous tube wall and the froth pedestal. Air is sparged through the porous inner tube wall and is sheared into small bubbles. These bubbles are then radially transported, together with attached hydrophobic particles, into a froth phase that forms on the cyclone axis. The froth phase is stabilized and constrained by the froth pedestal at the underflow, moved toward the vortex finder of the cyclone header, and discharged as an overflow product. Water-wetted hydrophilic particles generally remain in the slurry phase and are discharged as an underflow product through the annulus created by the froth pedestal.

During the past decade, large mechanical flotation cells, such as aeration-stirred tank reactors, have been designed, installed, and operated for mineral processing. In addition, considerable effort has been made to develop column flotation technology in the United States and elsewhere; a number of such systems have been installed in industries. Nevertheless, for both mechanical and column cells, the specific flotation capacity is generally limited to 1 to 2 tons per day (tpd) per cubic foot of cell volume.

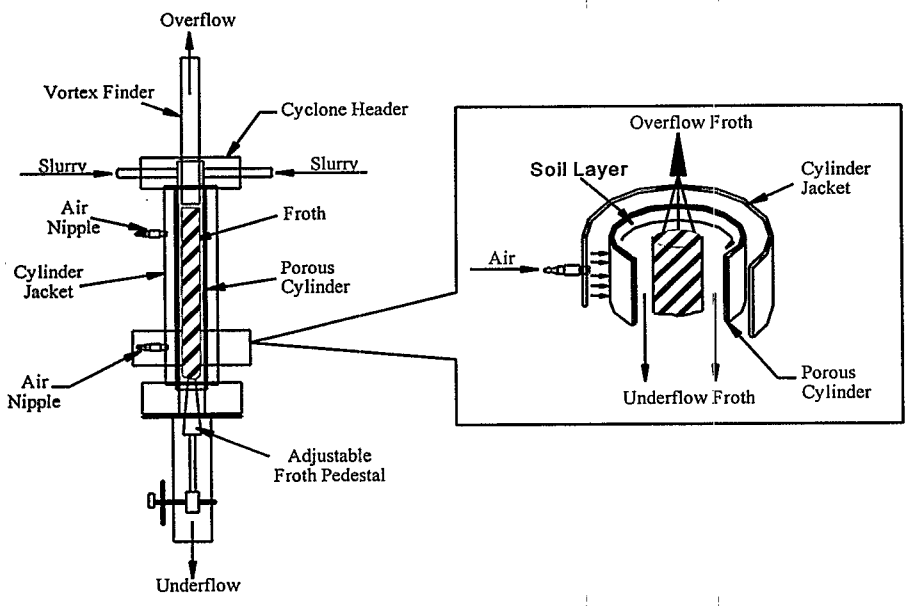

Air-Sparged Hydrocyclone

The SITE Program assesses but does not approve or endorse technologies.

In contrast, the ASH has a specific flotation capacity of at least 100 tpd per cubic foot of cell volume.

WASTE APPLICABILITY:

Standard flotation techniques used in industrial mineral processing are effective ways of concentrating materials. However, metal value recovery is never complete and the valuable material escaping the milling process is frequently concentrated in the very fine particle fraction.

The ASH can remove fine mineral particles that are amenable to the froth flotation process. These particles are generally sulfide minerals, such as galena (lead sulfide), sphalerite (zinc sulfide) and chalcopyrite (copper-iron-sulfide). Finely divided mining wastes containing these minerals oxidize and release the metallic elements as dissolved sulfates into the groundwater. Particularly applicable are tailings from older operations conducted before the development of froth flotation. Earlier operations recovered minerals by gravity concentration, which did not effectively capture fine particles and left tailings with relatively large concentrations of the environmentally hazardous fine sulfide minerals.

STATUS:

This technology was accepted into the SITE Emerging Technology Program in June 1990. The most recent pilot plant trials on tailings generated by gravity concentration have confirmed both the technology's ability to recover sulfide minerals and the high throughput capacity claimed by proponents of the ASH. However, results on the economics of ash processing were inconclusive. Studies under the SITE Program were completed in August 1994. The pilot plant was dismantled after 4 years of operation.

FOR FURTHER INFORMATION:

EPA PROJECT MANAGER:
Ed Bates
U.S. EPA
National Risk Management Research Laboratory
26 West Martin Luther King Drive
Cincinnati, OH 45268
513-569-7774
Fax: 513-569-7676

TECHNOLOGY DEVELOPER CONTACT:
Theodore Jordan
Montana College of Mineral Science and Technology
West Park Street
Butte, MT 57901
406-496-4112
406-496-4193
Fax: 406-496-4133

The SITE Program assesses but does not approve or endorse technologies.

MONTANA COLLEGE OF MINERAL SCIENCE AND TECHNOLOGY
(Campbell Centrifugal Jig)

TECHNOLOGY DESCRIPTION:

The Campbell Centrifugal Jig (CCJ) is a mechanical device that uses centrifugal force to separate fine heavy mineral and metal particles from waste materials. The CCJ combines jigging and centrifuging to separate these particles from a fluid slurry. TransMar, Inc., owns the patents and rights to the CCJ technology.

Standard jigs separate solids of different specific gravities by differential settling in a pulsating bed and gravitational field. Jigs operating in this mode can recover solids larger than about 150 mesh (105 microns). Centrifuges are effective in separating solids from liquids but are not effective in separating solids from solids.

The CCJ, shown in the figure below, combines the continuous flow and pulsating bed of the standard jig with the high acceleration forces of a centrifuge to segregate and concentrate heavy particles from the waste. The CCJ can recover particles ranging in size from 1 to about 500 microns, depending on whether the particles are sufficiently disaggregated from the host material. The disaggregated particle should have a specific gravity at least 50 percent greater than the waste material. The CCJ does not need chemicals to separate the solids.

Appropriately sized, slurried material is fed into the CCJ through a hollow shaft inlet at the top of the machine. The slurried material discharges from the shaft onto a diffuser plate, which has

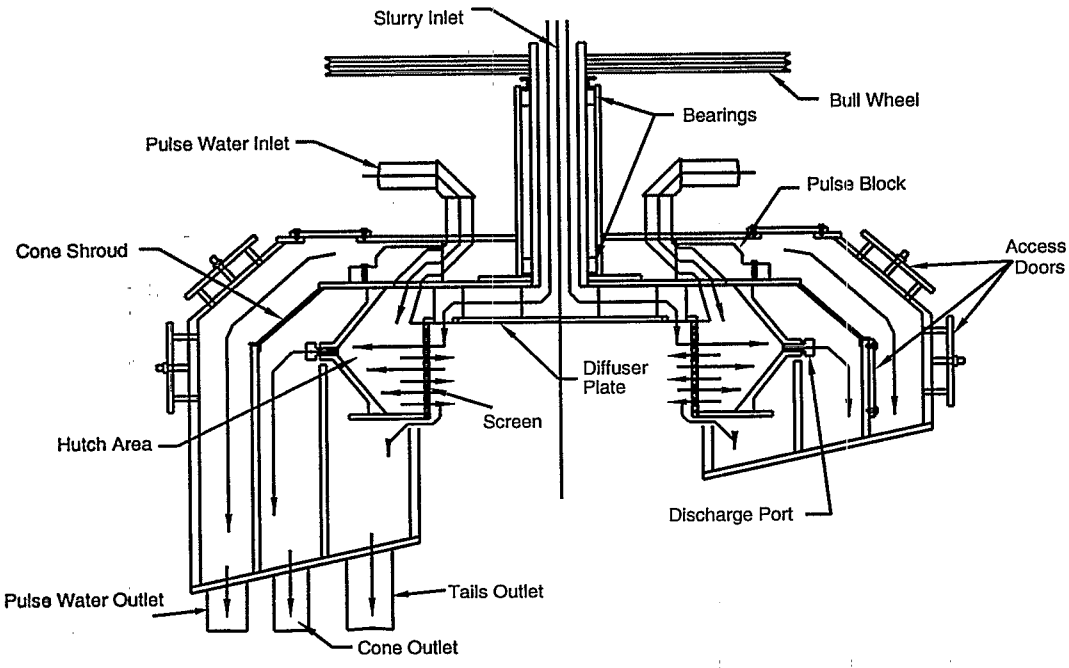

Campbell Centrifugal Jig (CCJ)

The SITE Program assesses but does not approve or endorse technologies.

vanes that distribute the material radially to the jig bed. The jig bed's surface is composed of stainless-steel shot ragging that is slightly coarser than the screen aperture. The jig bed is pulsated by pressurized water admitted through a screen by four rotating pulse blocks. The pulsing water intermittently fluidizes the bed, causing heavier particles to move through the ragging and screen to the concentrate port, while lighter particles continue across the face of the jig bed to the tailings port.

The effectiveness of separation depends on how well the original solids are disaggregated from the waste material and the specific gravity of each solid. The slurried feed material may require grinding to ensure disaggregation of the heavy metals. Operating parameters include pulse pressure, rotation speed or g-load, screen aperture, ragging type and size, weir height, and feed percent solids.

The CCJ produces heavy mineral or metal concentrates which, depending on the waste material, may be further processed for extraction or sale. A clean tailings stream may be returned to the environment.

WASTE APPLICABILITY:

The CCJ can separate and concentrate a wide variety of materials, ranging from base metals to fine coal ash and fine (1-micron) gold particles. Applications include (1) remediation of heavy metal-contaminated soils, tailings, or harbor areas containing spilled concentrates; (2) removal of pyritic sulfur and ash from fine coal; and (3) treatment of some sandblasting grit.

STATUS:

The CCJ was accepted into the SITE Emerging Technology Program in May 1992. The CCJ was evaluated at the Montana College of Mineral Science and Technology Research Center (Montana Tech). Montana Tech equipped a pilot plant to evaluate the Series 12 CCJ, which has a capacity of 1 to 3 tons per hour. Tests were completed in August 1994 on base-metal mine tailings from various locations in western Montana.

In addition, under the U.S. Department of Energy (DOE) Integrated Demonstration Program, the CCJ was tested on clean Nevada test site soil spiked with bismuth as a surrogate for plutonium oxide. These tests occurred at the University of Nevada, Reno, during August and September 1994.

FOR FURTHER INFORMATION:

EPA PROJECT MANAGER:
Jack Hubbard
U.S. EPA
National Risk Management Research Laboratory
26 West Martin Luther King Drive
Cincinnati, OH 45268
513-569-7507
Fax: 513-569-7620

TECHNOLOGY DEVELOPER CONTACT:
Gordon Ziesing
Montana College of Mineral Science and Technology
West Park Street
Butte, MT 59701
406-496-4112
406-496-4193
Fax: 406-496-4133

The SITE Program assesses but does not approve or endorse technologies.

NEW JERSEY INSTITUTE OF TECHNOLOGY
(GHEA Associates Process)

TECHNOLOGY DESCRIPTION:

The GHEA Associates process applies surfactants and additives to soil washing and wastewater treatment to make organic and metal contaminants soluble. In soil washing, soil is excavated, washed, and rinsed to produce clean soil. Wash and rinse liquids are then combined and treated to separate surfactants and contaminants from the water. Next, contaminants are separated from the surfactants by desorption and are isolated as a concentrate. Desorption regenerates the surfactants for repeated use in the process.

The liquid treatment consists of a sequence of steps involving phase separation, ultrafiltration, and air flotation (see figure below). The treated water meets all National Pollutant Discharge Elimination System groundwater discharge criteria, allowing it to be (1) discharged without further treatment, and (2) reused in the process itself or reused as a source of high quality water for other users.

In wastewater treatment applications, surfactants added to the wastewater adsorb contaminants. The mixture is then treated in the same manner as described above for (1) water purification, (2) separation of the contaminants, and (3) recovery of the surfactants. The treatment process yields clean soil, clean water, and a highly concentrated fraction of contaminants. No other residues, effluents, or emissions are produced. The figure below illustrates the GHEA process.

WASTE APPLICABILITY:

This technology can be applied to soil, sludges, sediments, slurries, groundwater, surface water, end-of-pipe industrial effluents, and in situ soil

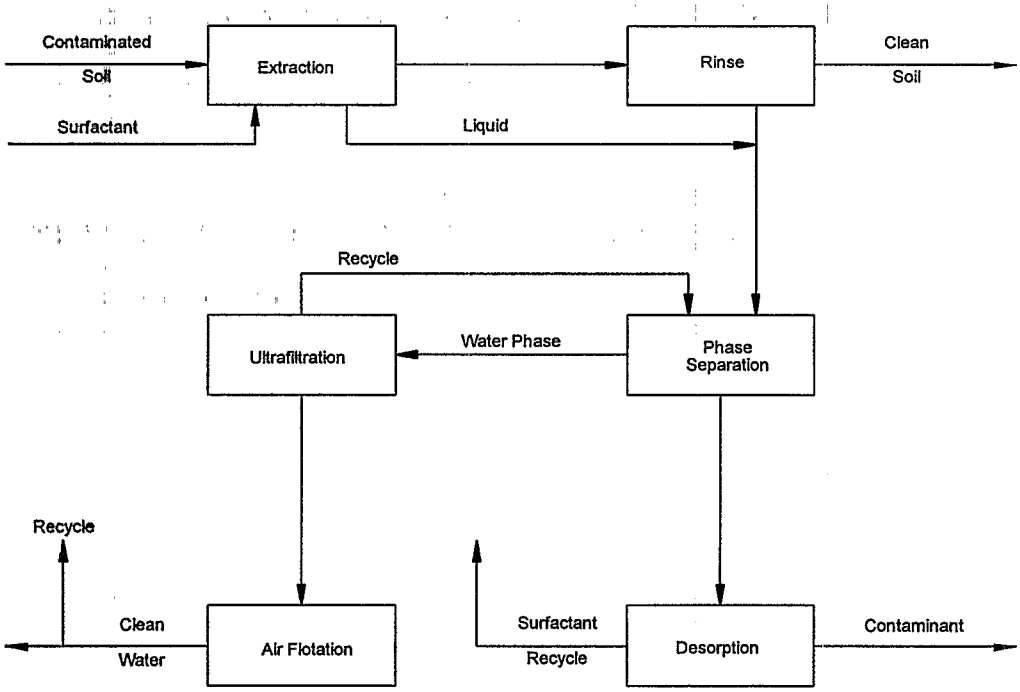

GHEA Process for Soil Washing

The SITE Program assesses but does not approve or endorse technologies.

flushing. Contaminants that can be treated include both organics and heavy metals, nonvolatile and volatile organic compounds, and highly toxic refractory compounds.

STATUS:

The technology was accepted into the SITE Emerging Technology Program in June 1990. Treatability tests were conducted on various matrices, including soils with high clay contents, industrial oily sludges, industrial wastewater effluents, and contaminated groundwater (see table below). In situ soil flushing tests have shown a 20-fold enhancement of contaminant removal rates. Tests using a 25-gallon pilot-scale plant have also been conducted. Costs for treatment range from $50 to $80 per ton. The Emerging Technology Bulletin (EPA/540/F-94/509), which details evaluation results, is available from EPA.

FOR FURTHER INFORMATION:

U.S. Environmental Protection Agency
National Risk Management Research Laboratory
26 West Martin Luther King Drive
Cincinnati, OH 45268
513-569-7861
Fax: 513-569-7620

TECHNOLOGY DEVELOPER CONTACT:
Itzhak Gotlieb
GHEA Associates
5 Balsam Court
Newark, NJ 07068
201-226-4642
Fax: 201-703-6805

SUMMARY OF TREATABILITY TEST RESULTS			
MATRIX	UNTREATED SAMPLE	TREATED SAMPLE	PERCENT REMOVAL
Volatile Organic Compounds (VOC): Trichloroethene; 1,2-Dichloroethene; Benzene; Toluene			
Soil, parts per million (ppm)	20.13	0.05	99.7%
Water, parts per billion (ppb)	109.0	2.5	97.8%
Total Petroleum Hydrocarbons (TPH): Soil, ppm	13,600	80	99.4%
Polychlorinated Biphenyls (PCB):			
Soil, ppm	380.00	0.57	99.8%
Water, ppb	6,000.0	<0.1	>99.9%
Trinitrotoluene in Water, ppm	180.0	<.08	>99.5%
Coal Tar Contaminated Soil (ppm):			
Benzo[a]pyrene	28.8	<0.1	>99.7%
Benzo[k]fluoranthene	24.1	4.4	81.2%
Chrysene	48.6	<0.1	>99.8%
Benzanthracene	37.6	<0.1	>99.7%
Pyrene	124.2	<0.1	>99.9%
Anthracene	83.6	<0.1	>99.8%
Phenanthrene	207.8	<0.1	>99.9%
Fluorene	92.7	<0.1	>99.9%
Dibenzofuran	58.3	<0.1	>99.8%
1-Methylnaphthalene	88.3	1.3	98.5%
2-Methylnaphthalene	147.3	<0.1	>99.9%
Heavy Metals In Soil: Chromium, ppm	21,000	640	96.8%
Iron (III) in Water, ppm:	30.8	0.3	99.0%

The SITE Program assesses but does not approve or endorse technologies.

PSI TECHNOLOGIES, A DIVISION OF PHYSICAL SCIENCES INC.

(Metals Immobilization and Decontamination of Aggregate Solids)

TECHNOLOGY DESCRIPTION:

PSI Technologies has developed a technology for metals immobilization and decontamination of aggregate solids (MeIDAS) (see figure below). The technology involves a modified incineration process in which high temperatures destroy organic contaminants in soil and concentrate metals into fly ash. The bulk of the soil ends up as bottom ash and is rendered nonleachable. The fly ash is then treated with a sorbent to immobilize the metals, as determined by the toxicity characteristic leaching procedure. The MeIDAS process requires a sorbent fraction of less than 5 percent by soil weight.

Standard air pollution control devices clean the effluent gas stream. Hydrogen chloride and sulfur dioxide, which may be formed from the oxidation of chlorinated organics and sulfur compounds in the waste, are cleaned by alkaline scrubbers. Fly ash is captured by a particulate removal device, such as an electrostatic precipitator or baghouse. The only solid residues exiting the process are treated soils, which no longer contain organics and will not leach toxic metals.

WASTE APPLICABILITY:

The MeIDAS process treats organics and heavy metals in soils, sediments and sludges. The process has been effective in treating arsenic, cadmium, chromium, lead, nickel, and zinc.

The MeIDAS process is applicable to wastes contaminated with a combination of volatile metals and complex organic mixtures of low volatility. Possible MeIDAS process applications include battery waste sites and urban sites

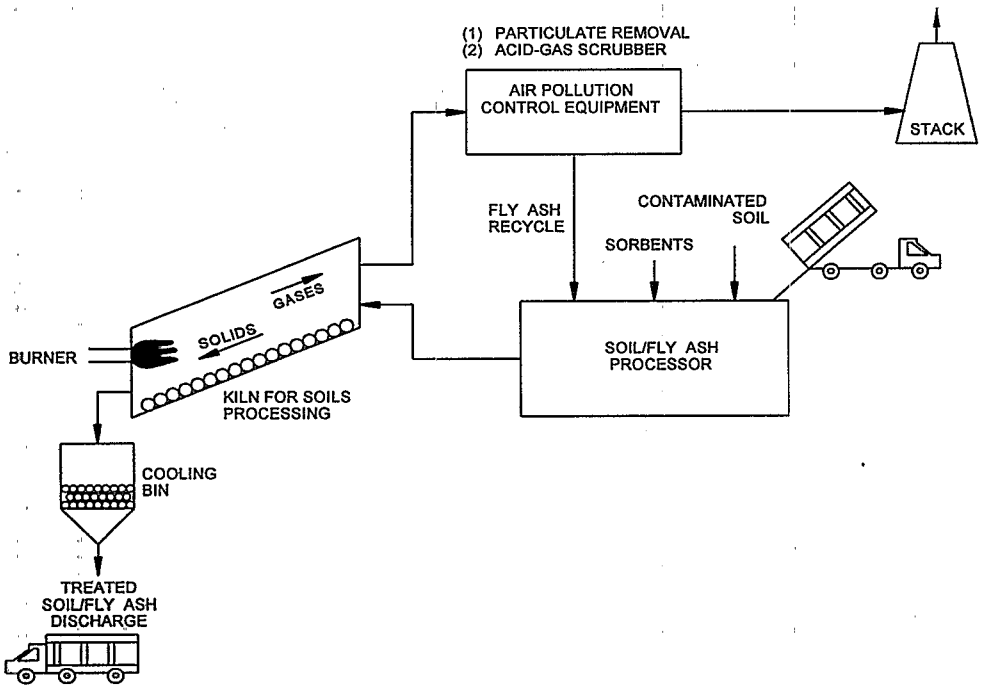

MeIDAS Process

The SITE Program assesses but does not approve or endorse technologies.

containing lead paint or leaded gasoline, or chemical or pesticide manufacturing facilities contaminated with organometallics.

STATUS:

This technology was accepted into the SITE Emerging Technology Program in July 1991. Bench-scale testing under the SITE Program was completed in July 1992. The testing showed that organic, lead, and arsenic wastes could be successfully treated with less sorbent (1 to 10 percent of the soil by weight) than previously anticipated. Pilot-scale testing began in October 1992 and was completed in May 1993. The Emerging Technology Report has been submitted to EPA for review.

Initial testing, conducted under the EPA Small Business Innovative Research program, has demonstrated the feasibility of treating wastes containing arsenic, cadmium, lead, and zinc.

FOR FURTHER INFORMATION:

EPA PROJECT MANAGER:
Mark Meckes
U.S. EPA
National Risk Management Research Laboratory
26 West Martin Luther King Drive
Cincinnati, OH 45268
513-569-7348
Fax: 513-569-7328

TECHNOLOGY DEVELOPER CONTACT:
Joseph Morency
PSI Technologies, A Division of Physical Sciences Inc.
20 New England Business Center
Andover, MA 01810
508-689-0003
Fax: 508-689-3232

The SITE Program assesses but does not approve or endorse technologies.

PULSE SCIENCES, INC.
(X-Ray Treatment of Aqueous Solutions)

TECHNOLOGY DESCRIPTION:

X-ray treatment of organically contaminated aqueous solutions is based on the in-depth deposition of ionizing radiation. X-rays collide with matter, generating a shower of lower energy secondary electrons within the contaminated waste material. The secondary electrons ionize and excite the atomic electrons, break up the complex contaminant molecules, and form highly reactive radicals. These radicals react with the volatile organic compounds (VOC) and semivolatile organic compounds (SVOC) to form nontoxic by-products such as water, carbon dioxide, and oxygen.

An efficient, high-power, high-energy, linear induction accelerator (LIA) plus X-ray converter generates the X-rays used in the treatment process. The LIA energy, which must be small enough to avoid nuclear activation and as large as possible to increase the bremsstrahlung conversion efficiency, will most likely be in the range of 8 to 10 million electron volts (MeV). A repetitive pulse of electrons 50 to 100 nanoseconds long is directed onto a cooled converter of a high atomic number metal to efficiently generate X-rays. The X-rays then penetrate the container and treat the waste materials contained within.

Based on coupled electron-photon Monte Carlo transport code calculations, the effective penetration depth of X-rays produced by converting 10-MeV electrons is 32 centimeters in water (after passing through the side of a standard 55-gallon drum). Large contaminant volumes can be easily treated without being absorbed a significant fraction of the ionizing radiation in the container walls. Either flowing waste or contaminated waste in stationary or rotating containers can be treated. No additives are required for the process, and in situ treatment is feasible. The cost of high throughput X-rayprocessing is estimated to be competitive with alternative processes that decompose the contaminants.

WASTE APPLICABILITY:

X-ray processing can treat a large number of organic contaminants in aqueous solutions (such as groundwater, liquids, leachates, or wastewater) without expensive waste extraction or preparation. The technology has successfully treated 17 organic contaminants (see the table on the next page). No hazardous by-products are predicted to form or have been observed in the experiments.

STATUS:

This technology was accepted into the SITE Emerging Technology Program in May 1991 and was evaluated in April 1994. A 1.2-MeV, 800-ampere, 55-nanosecond LIA gave a dose rate of 5 to 10 rads per second. Twelve different VOCs and SVOCs found in Superfund sites were irradiated in 21 aqueous matrices prepared with a neat solution of the contaminant in reagent grade water. The amount of X-ray dose (1 rad = 10^{-5} Joules per gram) required to decompose a particular contaminant was a function of its chemical bond structure and its reaction rate with the hydroxyl radical. When carbonate and bicarbonate ions (hydroxyl radical scavengers) were present in contaminated well water samples, approximately five times the X-ray dose was required to decompose contaminants that react strongly with the hydroxyl radical. The remediation rate of carbon tetrachloride, which does not react with hydroxyl radicals, was not affected.

An X-ray dose of 150 kilorads (krad) reduced the moderate contamination levels in a well water sample from a Superfund site at Lawrence Livermore National Laboratory (LLNL) to less than those set by the California Primary Drinking Water Standards. For a more highly contaminated LLNL well water sample, experimental data suggested a 500-krad dose was needed to reduce the contamination levels to drinking water standards.

The SITE Program assesses but does not approve or endorse technologies.

In principle, the rate coefficients determined from the data can be used to estimate the dose level required to destroy mixtures of multiple VOC contaminants and hydroxyl radical scavengers. However, these estimates should be applied judiciously. Only the experimentally determined destruction curves, based on the remediation of test samples of the actual mixture, can be used with confidence. The table below summarizes the X-ray treatment results from the SITE evaluation.

FOR FURTHER INFORMATION:

EPA PROJECT MANAGER:
Esperanza Piano Renard
U.S. EPA
National Risk Management Research Laboratory
2890 Woodbridge Avenue, MS-104
Edison, NJ 08837-3679
908-321-4355
Fax: 908-321-6640

TECHNOLOGY DEVELOPER CONTACT:
Vernon Bailey
Pulse Sciences, Inc.
600 McCormick Street
San Leandro, CA 94577
510-632-5100, ext. 227
Fax: 510-632-5300

CONTAMINANT	MATRIX	INITIAL CONCENTRATION (ppb)*	FINAL CONCENTRATION (ppb)	CPDWS** (ppb)	X-RAY DOSE (krad)
TCE	Deionized Water	9,780	< 0.1	5	50.3
PCE		10,500	< 0.1	5	69.8
Chloroform		2,000	4.4	--	178
Methylene Chloride		270	3.1	5	145.9
Trans-1,2-Dichloroethene		260	0.78	10	10.6
Cis-1,2-Dichloroethene		13	< 0.5	6	10.6
1,1,1-Trichloroethane		590	54	200	207.1
Carbon Tetrachloride (CCl_4)		180	14	0.5	224
Benzene		240	< 0.5	1	8.8
Toluene		150	< 0.5	150	4.83
Ethylbenzene		890	3.6	680	20.4
Xylene		240	1.2	1,750	5.6
Benzene/CCl_4	Contaminated Well Water	262/400	< 0.5/196	1/0.5	39.9/93.8
Ethylbenzene/CCl_4		1,000/430	< 0.5/70.9	680/0.5	33.2/185
Ortho-xylene/CCl_4		221/430	< 0.5/85	1,750/0.5	20.5/171
TCE	LLNL Well Water Sample #1	3,400	< 0.5	5	99.0
PCE		500	< 0.5	5	99.0
1,1-Dichloroethane		< 10	1	5	145.4
1,1-Dichloroethene		25	< 1	6	49.9
1,1,1-Trichloroethane		13	2.0	200	145.4
Cis-1,2-Dichloroethene		14	< 0.5	6	49.9
TCE	LLNL Well Water Sample #2	5,000	< 1.0	5	291
PCE		490	1.6	5	291
Chloroform		250	81	--	291
CCl_4		14	4	0.5	291
1,2-Dichloroethane		38	17	5	291
1,1-Dichloroethane		11	6.8	5	291
Freon		71	32	--	291

* parts per billion
** California Primary Drinking Water Standards

Summary of X-ray Treatment Results

The SITE Program assesses but does not approve or endorse technologies.

RECRA ENVIRONMENTAL, INC.
(formerly ELECTRO-PURE SYSTEMS, INC.)
(Alternating Current Electrocoagulation Technology)

TECHNOLOGY DESCRIPTION:

The alternating current electrocoagulation (ACE) technology offers an alternative to the use of metal salts or polymers and polyelectrolyte addition for breaking stable emulsions and suspensions. The technology removes metals, colloidal solids and particles, and soluble inorganic pollutants from aqueous media by introducing highly charged polymeric aluminum hydroxide species. These species neutralize the electrostatic charges on suspended solids and oil droplets to facilitate agglomeration or coagulation and resultant separation from the aqueous phase. The treatment prompts the precipitation of certain metals and salts.

The figure below depicts the basic ACE process. Electrocoagulation occurs in either batch mode, allowing recirculation, or continuous (one-pass) mode in an ACE fluidized bed separator. Electrocoagulation is conducted by passing the aqueous medium through the treatment cells in upflow mode. The electrocoagulation cell(s) consist of nonconductive piping equipped with rectilinearly shaped, nonconsumable metal electrodes between which is maintained a turbulent, fluidized bed of aluminum alloy pellets.

Application of the alternating current electrical charge to the electrodes prompts the dissolution of the fluidized bed and the formation of the polymeric hydroxide species. Charge neutralization is initiated within the electrocoagulation cell(s) and continues following effluent discharge. Application of the electrical field prompts electrolysis of the water medium and generates minute quantities of hydrogen gas. The coagulated solids will often become entrained in the gas, causing their flotation.

Attrition scrubbing of the fluidized bed pellets within the cell inhibits the buildup of scale or coating on the aluminum pellets and the face of the electrodes. Coagulation and flocculation occur simultaneously within the ACE cells as the effluent is exposed to the electric field and the aluminum dissolves from the fluidized bed.

The working volume of the fluidized bed cell, excluding external plumbing, is 5 liters. The ACE systems have few moving parts and can easily be integrated into a process treatment train for effluent, pretreatment, or polishing treatment. The ACE technology has been designed into water treatment systems which include membrane separation, reverse osmosis, electrofiltration, sludge dewatering, and thermo-oxidation technologies.

System operating conditions depend on the chemistry of the aqueous medium, particularly the conductivity and chloride concentration. Treatment generally requires application of low voltage (<135 VAC) and operating currents of

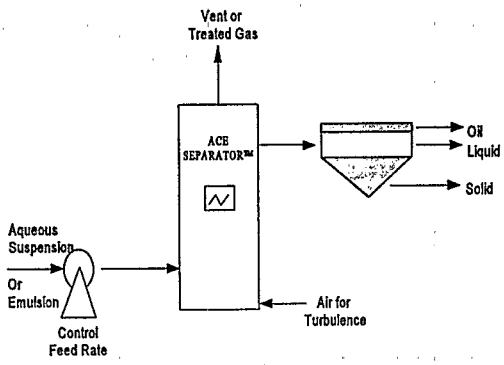

Alternating Current Electrocoagulation (ACE)

The SITE Program assesses but does not approve or endorse technologies.

less than 20 amperes. The flow rate of the aqueous medium through the treatment cell(s) depends on the solution chemistry, the nature of the entrained suspension or emulsion, and the treatment objectives.

Product separation occurs in conventional gravity separation devices or filtering systems. Each phase is removed for reuse, recycling, additional treatment, or disposal.

Current systems are designed to treat waste streams of between 10 and 100 gallons per minute (gpm). RECRA Environmental, Inc., maintains a bench-scale unit (1 to 3 gpm) at its Amherst Laboratory for use in conducting treatability testing.

WASTE APPLICABILITY:

The ACE technology treats aqueous-based suspensions and emulsions such as contaminated groundwater, surface water runoff, landfill and industrial leachate, wash and rinse waters, and various solutions and effluents. The suspensions can include solids such as inorganic and organic pigments, clays, metallic powders, metal ores, and colloidal materials. Treatable emulsions include a variety of solid and liquid contaminants, including petroleum-based by-products.

The ACE technology has demonstrated reductions of clay, latex, and various hydroxide loadings by over 90 percent. Chemical oxygen demand and total organic carbon content of spiked slurries have been reduced by over 80 percent. The technology has removed heavy metals at between 55 and 99 percent efficiency. Fluoride and phosphate have been removed at greater than 95 percent efficiency. The system has been used to recover fine-grained products which would otherwise have been discharged.

STATUS:

The ACE technology was accepted into the SITE Emerging Technology Program in July 1988. The laboratory-scale testing was completed in June 1992. The Emerging Technology Bulletin (EPA/540/F-92/011) and Emerging Technology Summary (EPA/540/S-93/504) are available from EPA. The research results are described in the *Journal of Air and Waste Management*, Volume 43, May 1993, pp. 784-789, "Alternating Current Electrocoagulation for Superfund Site Remediation."

Experiments on metals and complex synthetic slurries have defined major operating parameters for broad classes of waste streams. The technology has been modified to minimize electrical power consumption and maximize effluent throughput rates.

FOR FURTHER INFORMATION:

EPA PROJECT MANAGER:
Randy Parker
U.S. EPA
National Risk Management Research Laboratory
26 West Martin Luther King Drive
Cincinnati, OH 45268
513-569-7271
Fax: 513-569-7571

TECHNOLOGY DEVELOPER CONTACTS:
Kenneth Kinecki
RECRA Environmental, Inc.
10 Hazelwood Drive, Suite 110
Amherst, NY 14228-2298
800-527-3272
Fax: 716-691-2617

The SITE Program assesses but does not approve or endorse technologies.

REMEDIATION TECHNOLOGIES, INC.
(Biofilm Reactor for Chlorinated Gas Treatment)

TECHNOLOGY DESCRIPTION:

The Remediation Technologies, Inc., biological treatment technology uses aerobic cometabolic organisms in fixed-film biological reactors to treat gases contaminated with volatile chlorinated hydrocarbons. Contaminated gases enter the bottom of the 6-foot-tall reactor column and flow up through a medium that has a high surface area and favorable porosity for gas distribution. Both methanotrophic and phenol-degrading organisms have been evaluated within the reactor. The figure below illustrates a methanotrophic reactor.

In methanotrophic columns, methane and nutrients are added to grow the organisms capable of degrading volatile chlorinated hydrocarbons. The organisms degrade these compounds into acids and chlorides that can be subsequently degraded to carbon dioxide and chloride. Because of intermediate toxicity and competitive inhibition, methane-volatile organic compound (VOC) feeding strategies are critical to obtain optimum VOC degradation over the long term.

Methanotrophic bacteria from various soils were tested to determine potential VOC compound degradation. The optimal culture from this testing was isolated and transferred to a bench-scale biofilm reactor, where substrate degradation rates per unit of biofilm surface area were determined. Four pilot-scale biofilm reactors were then established, with feeding strategies and retention times based on earlier testing.

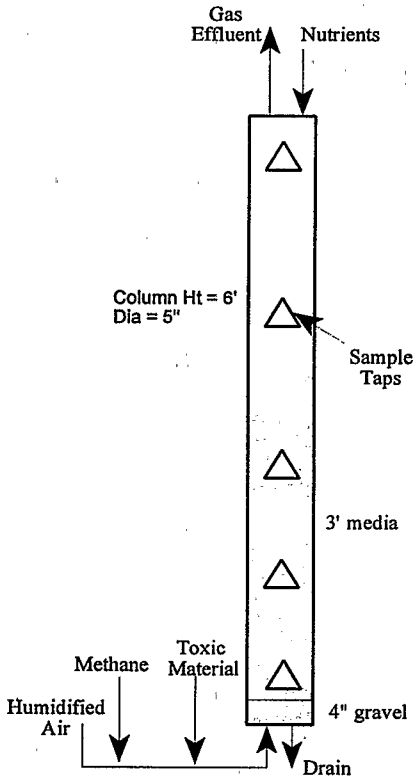

Methanotrophic Biofilm Reactor

The SITE Program assesses but does not approve or endorse technologies.

The following issues are investigated in the methanotrophic biofilm reactors:

- Comparison of different media types
- Trichloroethene (TCE) removal across the columns
- TCE degradation rates

In addition to studies of the methanotrophic biofilm reactors, a column was seeded with a filamentous phenol-degrading consortia that grows well on phenol in a nitrogen-limited solution. Phenol also induces enzymes capable of rapid cometabolic degradation of TCE.

WASTE APPLICABILITY:

This technology can treat gaseous streams of volatile chlorinated hydrocarbons. These waste streams may result from air stripping of contaminated groundwater or industrial process streams, or from vacuum extraction during in situ site remediation.

STATUS:

This technology was accepted into the SITE Emerging Technology Program in summer 1992; the evaluation was completed in 1995. The Emerging Technology Report, which details results from the evaluation, is being prepared.

TCE degradation rates in the pilot-scale biofilm reactor were well below those previously measured in laboratory testing or those reported in the literature for pure cultures. The phenol-fed column was started on a celite medium. TCE removal was superior to that in the methanotrophic columns, even with sub-optimal biomass development.

FOR FURTHER INFORMATION:

EPA PROJECT MANAGER:
Ronald Lewis
U.S. EPA
National Risk Management Research Laboratory
26 West Martin Luther King Drive
Cincinnati, OH 45268
513-569-7856
Fax: 513-569-7105

TECHNOLOGY DEVELOPER CONTACT:
Hans Stroo
Remediation Technologies, Inc.
1011 S.W. Klickitat Way, Suite 207
Seattle, WA 98134
206-624-9349
Fax: 206-624-2839

The SITE Program assesses but does not approve or endorse technologies.

RESOURCE MANAGEMENT & RECOVERY
(formerly BIO-RECOVERY SYSTEMS, INC.)
(AlgaSORB© Biological Sorption)

TECHNOLOGY DESCRIPTION:

The AlgaSORB© sorption process uses algae to remove heavy metal ions from aqueous solutions. The process takes advantage of the natural affinity for heavy metal ions exhibited by algal cell structures.

The photograph below shows a portable effluent treatment equipment (PETE) unit, consisting of two columns operating either in series or in parallel. Each column contains 0.25 cubic foot of AlgaSORB©, the treatment medium. The PETE unit shown below can treat waste at a flow rate of approximately 1 gallon per minute (gpm). Larger systems have been designed and manufactured to treat waste at flow rates greater than 100 gpm.

The AlgaSORB© medium consists of dead algal cells immobilized in a silica gel polymer. This immobilization serves two purposes: (1) it protects the algal cells from decomposition by other microorganisms, and (2) it produces a hard material that can be packed into columns that, when pressurized, still exhibit good flow characteristics.

The AlgaSORB© medium functions as a biological ion-exchange resin to bind both metallic cations (positively charged ions, such as mercury [Hg^{+2}]) and metallic oxoanions (negatively charged, large, complex, oxygen-containing ions, such as selenate [SeO_4^{-2}]). Anions such as chlorides or sulfates are only weakly bound or not bound at all. In contrast to current ion-exchange technology, divalent cations

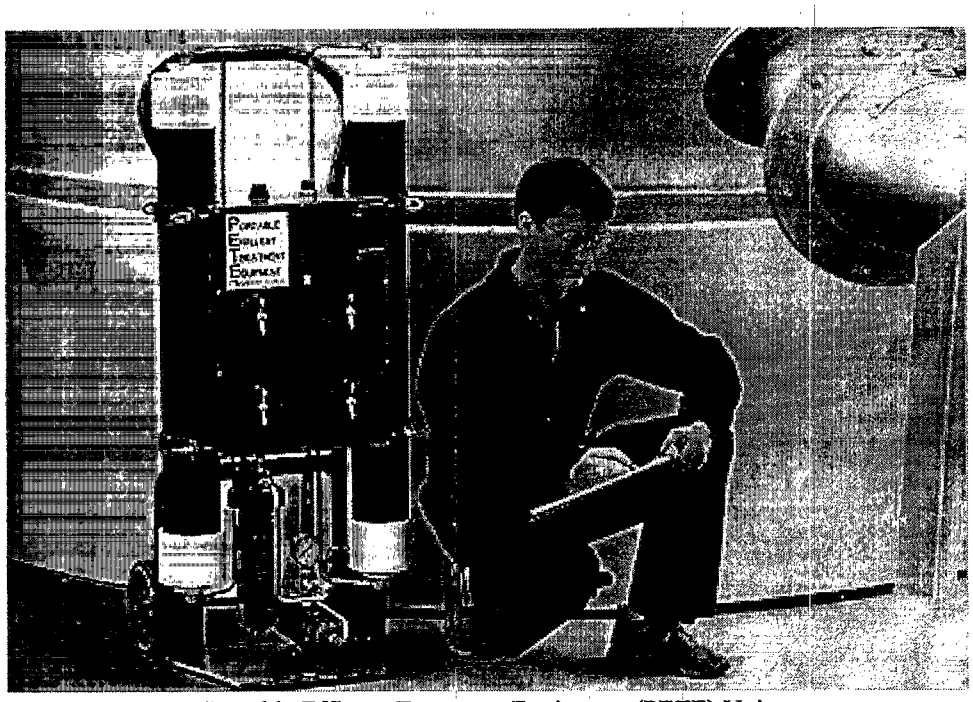

Portable Effluent Treatment Equipment (PETE) Unit

The SITE Program assesses but does not approve or endorse technologies.

typical of hard water, such as calcium (Ca^{+2}) and magnesium (Mg^{+2}), or monovalent cations, such as sodium (Na^{+}) and potassium (K^{+}) do not significantly interfere with the binding of toxic heavy metal ions to the algae-silica matrix.

Like ion-exchange resins, AlgaSORB© can be regenerated. After the AlgaSORB© medium is saturated, the metals are removed from the algae with acids, bases, or other suitable reagents. This regeneration process generates a small volume of solution containing highly concentrated metals. This solution must undergo treatment prior to disposal.

WASTE APPLICABILITY:

This technology can remove heavy metal ions from groundwater or surface leachates that are "hard" or that contain high levels of dissolved solids. The process can also treat rinse waters from electroplating, metal finishing, and printed circuit board manufacturing operations. Metals removed by the technology include aluminum, cadmium, chromium, cobalt, copper, gold, iron, lead, manganese, mercury, molybdenum, nickel, platinum, selenium, silver, uranium, vanadium, and zinc.

STATUS:

This technology was accepted into the Emerging Technology Program in 1988; the evaluation was completed in 1990. Under the Emerging Technology Program, the AlgaSORB© sorption process was tested on mercury-contaminated groundwater at a hazardous waste site in Oakland, California. Testing was designed to determine optimum flow rates, binding capacities, and the efficiency of stripping agents. The Emerging Technology Report (EPA/540/5-90/005a&b), Emerging Technology Summary (EPA/540/S5-90/005), and Emerging Technology Bulletin (EPA/540/F-92/003) are available from EPA. An article was also published in the *Journal of Air and Waste Management*, Volume 41, No. 10, October 1991. Based on results from the Emerging Technology Program, Resource Management & Recovery was invited to participate in the SITE Demonstration Program.

The process is being commercialized for groundwater treatment and industrial point source treatment.

FOR FURTHER INFORMATION:

EPA PROJECT MANAGER:
Ronald Lewis
U.S. EPA
National Risk Management Research Laboratory
26 West Martin Luther King Drive
Cincinnati, OH 45268
513-569-7856
Fax: 513-569-7105

TECHNOLOGY DEVELOPER CONTACT:
Michael Hosea
Resource Management & Recovery
4980 Baylor Canyon Road
Las Cruces, NM 88011
505-382-9228
Fax: 505-382-9228

The SITE Program assesses but does not approve or endorse technologies.

STATE UNIVERSITY OF NEW YORK AT OSWEGO, ENVIRONMENTAL RESEARCH CENTER

(Electrochemical Peroxidation of PCB-Contaminated Sediments and Waters)

TECHNOLOGY DESCRIPTION:

The Environmental Research Center at the State University of New York at Oswego (SUNY) has developed an electrochemical peroxidation process widely applicable for the treatment of liquid wastes and slurries with low solids content. The process treats mixed waste by using (1) oxidative free radicals to attack organic contaminants, and (2) adsorptive removal of metals from liquid waste streams. Initial testing indicates destructive efficiencies greater than 99 percent for a variety of compounds including polychlorinated biphenyls (PCB), volatile organic compounds, benzene, toluene, ethylbenzene, xylene, organic dyes, and microbes.

The process involves combining Fenton's reagent with a small electrical current. In a batch treatment process, steel electrodes are submersed into the waste to be treated; solid particles are suspended by mechanical mixing or stirring. A low direct current is applied to the electrodes, and hydrogen peroxide and a reduced form of iron are added. The iron and hydrogen peroxide instantaneously react to form free radicals, which oxidize organic contaminants. Free radicals are also produced by the reaction of the peroxide with solvated electrons. The process can be significantly enhanced by pH adjustment, periodic current reversal, and use of proprietary enhancements.

Metals readily adsorb to the iron hydroxide by-product, and the metals can then be separated by precipitation or flocculation. The volume of by-products may be reduced and the metals may be immobilized by heating and phase conversion to hematite. In specific applications, select metals may be plated onto electrodes and recovered.

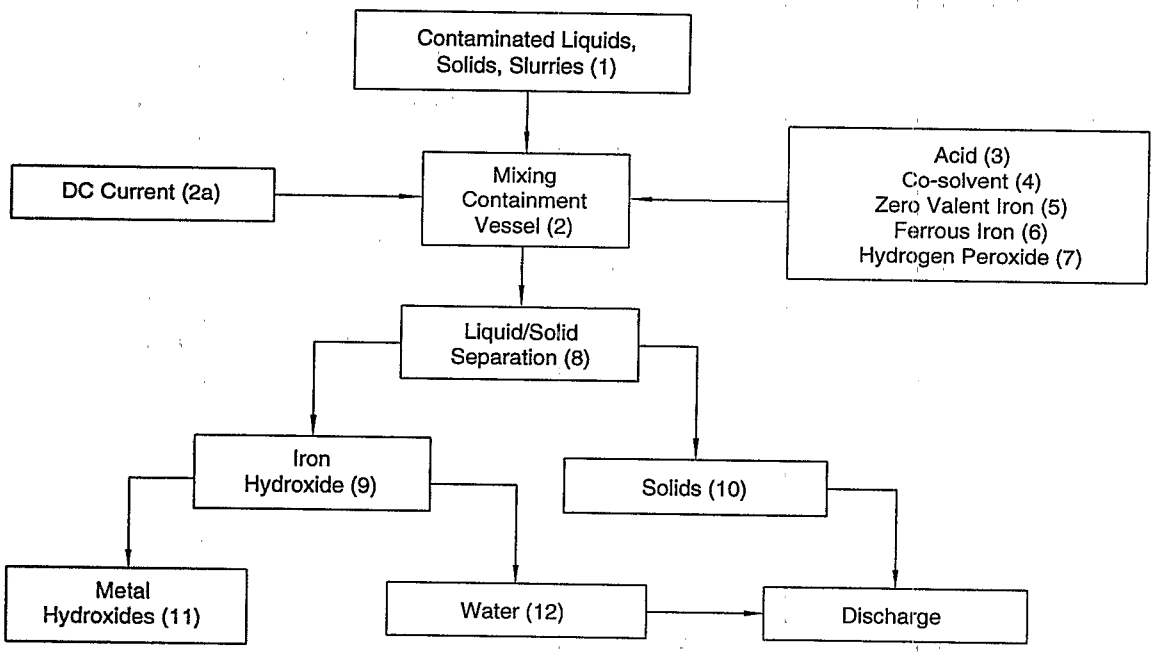

Pilot-Scale Electrochemical Peroxidation System

The SITE Program assesses but does not approve or endorse technologies.

WASTE APPLICABILITY:

This process is capable of treating liquids and slurries containing a variety of contaminants, including oxidizable organic compounds and metals. The process may be applied to industrial process wastes (textiles, pulp and paper, food industry), landfill leachates, gasoline- or solvent-contaminated groundwater, pesticide rinsates, or other liquid wastes.

STATUS:

The technology was accepted into the SITE Emerging Technology Program in November 1993 to evaluate photochemical methods of destroying PCBs in water and sediment. The evaluation was complete in 1995. An Emerging Technology Report will be available in late 1996.

During research related to the initial SITE evaluation, which focused on photocatalytic processes, a new technology (electrochemical peroxidation) was discovered. Electrochemical peroxidation has distinct advantages over photochemical processes, and its development was pursued. A pilot-scale continuous flow treatment system has been constructed with a local remediation firm and will be tested at a gasoline-contaminated groundwater site in spring 1997. If initial tests are encouraging, in situ application of the process will be conducted.

FOR FURTHER INFORMATION:

EPA PROJECT MANAGER:
Hector Moreno
U.S. EPA
National Risk Management Research Laboratory
26 West Martin Luther King Drive
Cincinnati, OH 45268
513-569-7882
Fax: 513-569-7879

TECHNOLOGY DEVELOPER CONTACTS:
Ronald Scrudato
Jeffrey Chiarenzelli
Environmental Research Center
319 Piez Hall
State University of New York at Oswego
Oswego, NY 13126
315-341-3639
Fax: 315-341-5346

The SITE Program assesses but does not approve or endorse technologies.

SVEDALA INDUSTRIES, INC.
(PYROKILN THERMAL ENCAPSULATION Process)

TECHNOLOGY DESCRIPTION:

The PYROKILN THERMAL ENCAPSULATION process is designed to improve conventional rotary kiln incineration of hazardous waste. The process introduces inorganic additives (fluxing agents) with the waste to promote incipient slagging or thermal encapsulating reactions near the kiln discharge. The thermal encapsulation is augmented using other additives in either the kiln or in the air pollution control (APC) baghouse to stabilize the metals in the fly ash. The process is designed to (1) immobilize the metals remaining in the kiln ash, (2) produce an easily handled nodular form of ash, and (3) stabilize metals in the fly ash, while avoiding the problems normally experienced with higher temperature "slagging kiln" operations.

The basis of this process is thermal encapsulation. Thermal encapsulation traps metals in a controlled melting process operating in the temperature range between slagging and nonslagging modes, producing ash nodules that are 0.25- to 0.75-inch in diameter.

The figure below illustrates the process. Wastes containing organic and metallic contaminants are incinerated in a rotary kiln. Metals (in particular, those with high melting points) are trapped in the bottom ash from the kiln through the use of fluxing agents that promote agglomeration with controlled nodulizing.

The PYROKILN THERMAL ENCAPSULATION process may reduce leaching of metals to levels below EPA toxicity characteristic leaching procedure (TCLP) limits for metals. Metals with low melting and vaporization temperatures, such as arsenic, lead, and zinc, are expected to partially volatilize, partitioning between the bottom ash and the fly ash. Metals concentrated in the fly ash may be stabilized, if necessary, by adding reagents to the kiln and to the APC system to reduce leaching to

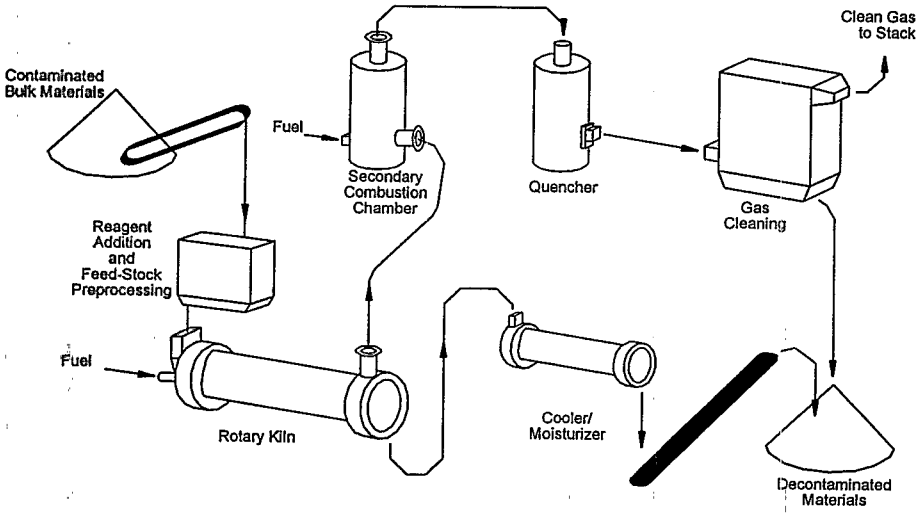

PYROKILN THERMAL ENCAPSULATION Process

The SITE Program assesses but does not approve or endorse technologies.

below TCLP limits. This process may also reduce the total dust load to the APC system and the amount of particulate emissions from the stack.

The use of fluxing reagents is a key element in this technology. The fluxing agents are introduced into the kiln in the proper amount and type to lower the ash's softening temperature. Proper kiln design is required to allow the kiln outlet to function as an ash agglomerator. Good temperature control is required to keep the agglomerates at the correct particle size, yielding the desired 0.25- to 0.75-inch nodules. By producing nodules, rather than a molten slag, the process is expected to prevent operating problems such as ash quenching, overheating, and premature refractory failure. The process should also simplify cooling, handling, and conveying of the ash.

The controlled nodulizing process should immobilize metals with high boiling points. Lead, zinc, and other metals with lower volatilization temperatures tend to exit the kiln as fine fumes. Reagents can be injected into the kiln, the APC devices, or a final solids mixer to aid in the collection of these metals from the gas stream.

WASTE APPLICABILITY:

The technology is intended for soils and sludges contaminated with organics and metals. As with other rotary kiln systems, the process is expected to destroy a broad range of organic species, including halogenated and nonhalogenated organics and petroleum products. Svedala Industries, Inc., claims that metals that may be encapsulated or stabilized include antimony, arsenic, barium, beryllium, cadmium, chromium, copper, lead, nickel, selenium, silver, thallium, and zinc.

STATUS:

This technology was accepted into the SITE Emerging Technology Program in March 1990. A final report has been prepared, and a technical paper summarizing the project was presented in 1994 at the Air and Waste Management Association 87th Annual Meeting and Exhibition in Cincinnati, Ohio. The final report was published in the July 1995 issue of the *Journal of the Air and Waste Management Association.*

A synthetic soil matrix was created for the batch rotary kiln tests. Feed preparation was a key element in nodule production. These tests yielded nodules with appropriate crush strength. Test results showed a decrease in TCLP metal leachate levels with increasing crush strength.

An analytical method involving microwave-aided digestion was used to evaluate samples produced in a second batch kiln test program. This method provided excellent, consistent results, indicating leachability below TCLP limits.

FOR FURTHER INFORMATION:

EPA PROJECT MANAGER:
Marta K. Richards
U.S. EPA
National Risk Management Research Laboratory
26 West Martin Luther King Drive
Cincinnati, OH 45268
513-569-7692
Fax: 513-569-7676

TECHNOLOGY DEVELOPER CONTACTS:
Jim Kidd
Svedala Industries, Inc.
20965 Crossroads Circle
Waukesha, WI 53186
414-798-6341
Fax: 414-798-6211

Glenn Heian
Svedala Industries, Inc.
Process Research and Test Center
9180 Fifth Avenue
Oak Creek, WI 53154
414-762-1190
Fax: 414-764-3443

The SITE Program assesses but does not approve or endorse technologies.

THERMATRIX, INC.
(formerly PURUS, INC.)
(Photolytic Oxidation Process)

TECHNOLOGY DESCRIPTION:

The photolytic oxidation process indirectly destroys volatile organic compounds (VOC) in soil and groundwater. The process uses a xenon pulsed-plasma flash-lamp that emits short wavelength ultraviolet (UV) light at very high intensities. The process strips the contaminants into the vapor phase, and the UV treatment converts the VOCs into less hazardous compounds.

Photolysis occurs when contaminants absorb sufficient UV light energy, transforming electrons to higher energy states and breaking molecular bonds (see figure below). Hydroxyl radicals, however, are not formed. The process requires the UV light source to emit wavelengths in the regions absorbed by the contaminant. An innovative feature of this technology is its ability to shift the UV spectral output to optimize the photolysis.

The process uses vacuum extraction or air stripping to volatilize VOCs from soils or groundwater, respectively. VOCs then enter the photolysis reactor, where a xenon flashlamp generates UV light. The plasma is produced by pulse discharge of electrical energy across two electrodes in the lamp. Ninety-nine percent destruction occurs within seconds, allowing continuous operation. Because organics are destroyed in the vapor phase, the process uses less energy than a system treating dissolved organics.

WASTE APPLICABILITY:

The photolytic oxidation process is designed to destroy VOCs, including dichloroethene (DCE), tetrachloroethene (PCE), trichloroethene (TCE), and vinyl chloride volatilized from soil or groundwater. Destruction of other VOCs, such as benzene, carbon tetrachloride, and 1,1,1-trichloroethane, is under investigation.

STATUS:

The photolytic oxidation process was accepted into the SITE Emerging Technology Program in March 1991. Field testing of a full-scale prototype began in October 1991. The test was conducted at the Lawrence Livermore National Laboratory Superfund site in California. The site contains soil zones highly contaminated with TCE.

During the field test, a vacuum extraction system delivered contaminated air to the unit at air flows up to 500 cubic feet per minute (cfm). Initial TCE concentrations in the air were approximately 250 parts per million by volume. The contaminant removal goal for the treatment was 99 percent. Vapor-phase carbon filters were placed downstream of the unit to satisfy California Air Quality emission control

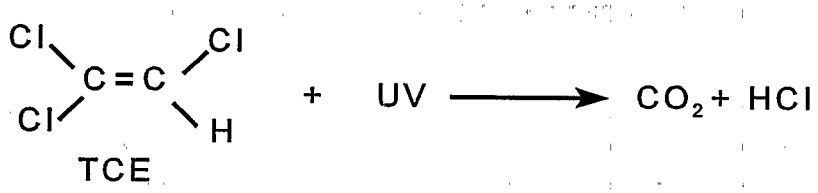

UV Photolysis of TCE

The SITE Program assesses but does not approve or endorse technologies.

requirements during the field test. Test results are discussed below. The Final Report (EPA/540/R-93/516), the Summary Report (EPA/540/SR-93/516), and the Technology Bulletin (EPA/540/F-93/501) have been published.

The low-wavelength UV emissions allowed direct photolysis of many VOCs, particularly chlorinated compounds and freons, that would not have been possible with commercial mercury vapor lamps. TCE, PCE, and DCE were quickly destroyed. To be rapidly photolyzed, some VOCs require photosensitization or an even lower-wavelength light source.

TCE results are shown in the table below. TCE removal yielded undesirable intermediates. Greater than 85 percent of the TCE chain photo-oxidation product is dichloroacetyl chloride (DCAC). Further oxidation of DCAC is about 100 times slower than TCE photolysis and forms dichlorocarbonyl (DCC) at about 20 percent yield. At this treatment level, the DCC concentration may be excessive, requiring additional treatment.

Further studies should focus on (1) the effectiveness of dry or wet scrubbers for removing acidic photo-oxidation products, (2) development of thermal or other methods for posttreatment of products such as DCAC, and (3) the use of shorter-wavelength UV lamps or catalysts to treat a broader range of VOCs.

FOR FURTHER INFORMATION:

EPA PROJECT MANAGER:
Norma Lewis
U.S. EPA
National Risk Management Research Laboratory
26 West Martin Luther King Drive
Cincinnati, OH 45268
513-569-7665
Fax: 513-569-7787

TECHNOLOGY DEVELOPER CONTACT:
Steve McAdams
Thermatrix, Inc.
101 Metro Drive, Suite 248
San Jose, CA 95110
408-453-0490
Fax: 408-453-0492

TCE PHOTOLYSIS FIELD TEST RESULTS

Freq. (Hz)	No. of Chambers	Flow (cfm)	Res. Time (sec)	TCE Input (ppmv)	TCE Output (ppmv)	TCE Destruction (%)	DCC Yield (ppmv)	DCAC Yield (ppmv)	Chlorine Balance (Mole%)
30	4	103	9.6	78.4	dl	≥99.99	nd	20.2	78.8
30	4	97	10.1	108.5	dl	≥99.99	21.3	26.5	106.2
30	4	95	10.4	98.3	dl	≥99.99	25.6	34	114.5
30	2	106	4.6	91.7	0.07	99.92	15.9	49.2	91.1
15	4	97	10.1	106.8	dl	≥99.99	22.8	nd	nd
15	2	103	4.8	101.3	dl	≥99.99	12.6	65.3	86.2
5	4	95	10.4	104.9	dl	≥99.99	8.7	75.7	90.0
5	2	103	4.8	101.4	dl	≥99.9	9.4	76.3	88.8
1	4	106	9.3	101.7	0.85	99.16	12.5	83.2	90.3
1	2	103	4.8	98.5	13.23	86.57	6.8	84.9	93.3

Notes:
Hz = Hertz
cfm = cubic feet per minute
sec = seconds
ppmv = parts per million volume
dl = detection limit
nd = not detected

The SITE Program assesses but does not approve or endorse technologies.

TRINITY ENVIRONMENTAL TECHNOLOGIES, INC.

(PCB- and Organochlorine-Contaminated Soil Detoxification)

TECHNOLOGY DESCRIPTION:

This technology uses an aprotic solvent, other reagents, and heat to dehalogenate polychlorinated biphenyls (PCB) in solids to inert biphenyl and chloride salts (see figure below). First, solid material is sized to allow better contact between the reagents and PCBs. In a continuous flow reactor, the soils are heated to drive off excess water. Reagents are then added to destroy the PCBs.

The reagent, consisting of a solvent and an inorganic alkali material, completely strips chlorine from the PCB molecule. Excess alkali can be easily neutralized and is reusable in the process. Treated soil can be returned to the excavation once analytical results show that PCBs have been destroyed.

Gas chromatography/mass spectroscopy analyses of processed PCB materials show that the process produces no toxic or hazardous products.

A chlorine balance confirms that PCBs are completely dehalogenated. To further confirm chemical dehalogenation, inorganic and total organic chloride analyses are also used. The average total chloride recovery for treated soils is greater than 90 percent.

The commercial process is expected to be less costly than incineration but more expensive than land disposal. Since no stack emissions are produced, permitting the process for a remediation would be easier than incineration.

WASTE APPLICABILITY:

The process can treat many different solid and sludge-type materials contaminated with PCB Aroclor mixtures, specific PCB congeners, pentachlorophenol, and individual chlorinated dioxin isomers. However, other chlorinated hydrocarbons such as pesticides, herbicides, and polychlorinated dibenzofurans could also be treated by this technology.

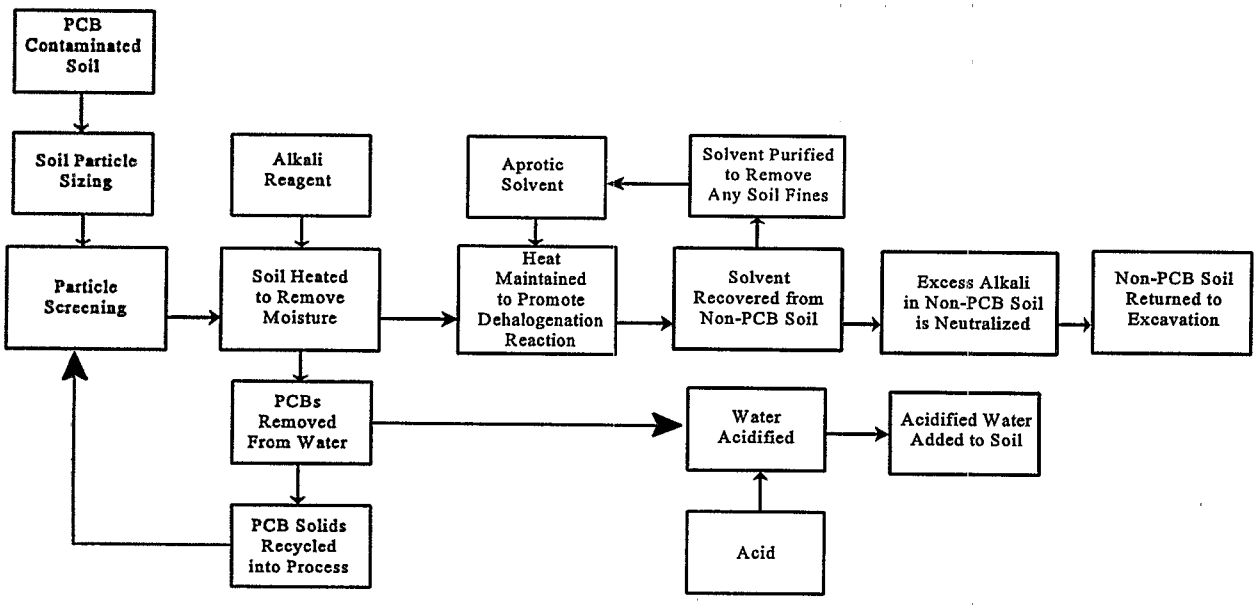

PCB Soil Detoxification Process

The SITE Program assesses but does not approve or endorse technologies.

STATUS:

This technology was accepted into the SITE Emerging Technology Program in July 1990. The current system was developed by researchers in early 1991, after the original aqueous, caustic-based system proved ineffective at destroying PCBs.

The SITE project was completed in 1992. Trinity is investigating further improvements to the technology. Due to cost limitations, no commercialization of the investigated process is expected. A final report will not be published.

In bench-scale studies, synthetically contaminated materials have been processed to eliminate uncertainties in initial PCB concentration. This chemical process has reduced PCB concentrations from 2,000 parts per million (ppm) to less than 2 ppm in about 30 minutes using moderate power input. Further laboratory experiments are underway to determine the reaction mechanism and to enhance PCB destruction. Through additional experimentation, Trinity Environmental Technologies, Inc., expects to reduce processing time through better temperature control, more efficient mixing, and possibly more aggressive reagents.

A modular pilot-scale processor has been planned that uses several heating zones to preheat and dry the contaminated soil, followed by PCB destruction. The pilot process would be capable of processing 1 ton per hour initially. Additional modules could be added to increase process capacity, as needed. Contaminated soils from actual sites will be used to test the pilot-scale processor instead of the synthetically contaminated soils used in bench-scale testing.

FOR FURTHER INFORMATION:

EPA PROJECT MANAGER:
Paul dePercin
U.S. EPA
National Risk Management Research Laboratory
26 West Martin Luther King Drive
Cincinnati, OH 45268
513-569-7797
Fax: 513-569-7105
E-Mail: dePercin.Paul@epamail.epa.gov

TECHNOLOGY DEVELOPER CONTACT:
Duane Koszalka
Trinity Environmental Technologies, Inc.
62 East First Street
Mound Valley, KS 67354
316-328-3222
Fax: 316-328-2033

The SITE Program assesses but does not approve or endorse technologies.

UNIVERSITY OF DAYTON RESEARCH INSTITUTE
(Photothermal Detoxification Unit)

TECHNOLOGY DESCRIPTION:

Photolytic reactions (reactions induced by exposure to ultraviolet [UV] light) can destroy certain hazardous organic wastes at relatively low temperatures. However, most photochemical processes offer relatively limited throughput rates and cannot completely mineralize the targeted wastes. For aqueous waste streams, these problems have been partially addressed by using indirect photochemical reactions involving a highly reactive photolytic initiator such as hydrogen peroxide or heterogeneous catalysts. Recently, the University of Dayton Research Institute (UDRI) developed a photolytic detoxification process to treat the gas waste streams. This process is clean and efficient and offers the speed and general applicability of a combustion process.

The photothermal detoxification unit (PDU) uses photothermal reactions conducted at temperatures higher than those used in conventional photochemical processes (200 to 500 °C versus 20 °C), but lower than combustion temperatures (typically greater than 1,000 °C). At these elevated temperatures, photothermal reactions are energetic enough to destroy many wastes quickly and efficiently without producing complex and potentially hazardous by-products.

The PDU is a relatively simple device, consisting of an insulated reactor vessel illuminated with high-intensity UV lamps. As shown in the figure below, the lamps are mounted externally for easy maintenance and inspection. Site remediation technologies that generate high-temperature gas streams, such as thermal desorption or in situ steam stripping, can incorporate the PDU with only slight equipment modifications. The PDU can be equipped with a pre-heater for use with soil vapor extraction (SVE). Furthermore, the PDU can be equipped with conventional air pollution control devices for removal of acids and suspended particulates from the treated process stream. The PDU shown in the figure below is also equipped with built-in sampling

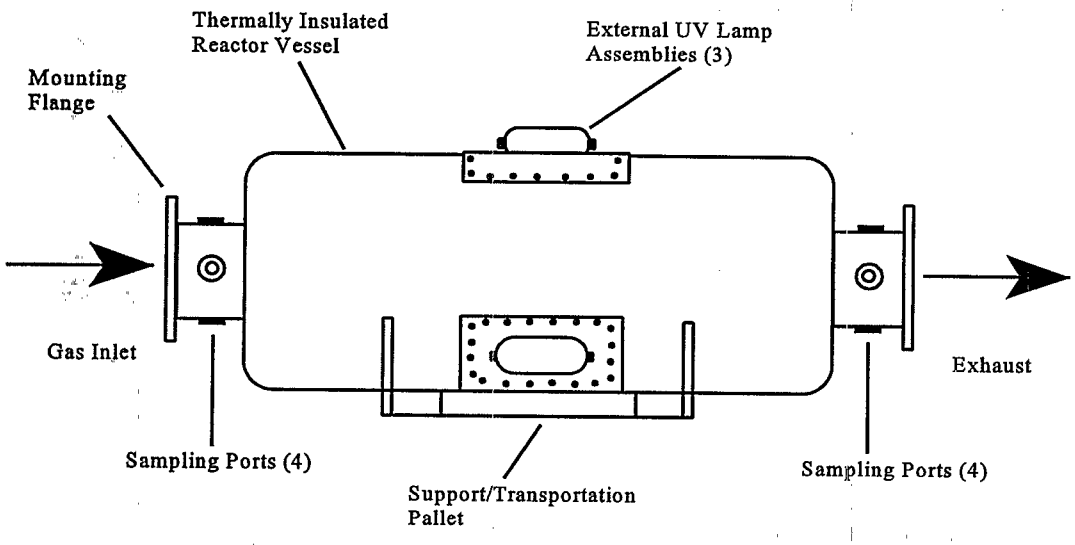

Photothermal Detoxification Unit (PDU)

The SITE Program assesses but does not approve or endorse technologies.

ports for monitoring and quality assurance and quality control.

WASTE APPLICABILITY:

According to UDRI, the PDU has proven extremely effective at destroying the vapors of polychlorinated biphenyls, polychlorinated dibenzodioxins, polychlorinated dibenzofurans, aromatic and aliphatic ketones, and aromatic and aliphalic chlorinated solvents, as well as brominated and nitrous wastes found in soil, sludges, and aqueous streams. The PDU can be incorporated with most existing and proposed remediation processes for clean, efficient, on-site destruction of the off-gases. More specifically, high-temperature processes can directly incorporate the PDU; SVE can use the PDU fitted with a preheater; and groundwater remediation processes can use the PDU in conjunction with air stripping.

STATUS:

The technology was accepted into the Emerging Technology Program in August 1992, and development work began in December 1992. The evaluation was completed in 1994. The Emerging Technology Report (EPA/540/R-95/526), the Emerging Technology Bulletin (EPA/540/F-95/505) and the Emerging Technology Summary (EPA/540/SR-95/526) are available from EPA. An article was also published in the *Journal of Air and Waste Management*, Volume 15, No. 2, 1995.

Emerging Technology Program data indicate that the technology performs as expected for chlorinated aromatic wastes, such as dichlorobenzene and tetrachlorodibenzodioxin, and better than expected for relatively light chlorinated solvents, such as trichloroethene (TCE) and tetrachloroethene. Further tests with selected mixtures, including benzene, toluene, ethyl-benzene, xylene, TCE, dichlorobenzene, and water vapor, show that the process is effective at treating wastes typically found at many remediation sites. Adequate scaling and performance data are now available to proceed with the design and development of prototype full-scale units for field testing and evaluation.

Through prior programs with the U.S. Department of Energy, technology effectiveness has been thoroughly investigated using relatively long wavelength UV light (concentrated sunlight with wavelengths greater than 300 nanometers). Limited data have also been generated at shorter wavelengths (higher energy) using available industrial UV illumination systems.

FOR FURTHER INFORMATION:

U.S. Environmental Protection Agency
National Risk Management Research Laboratory
26 W. Martin Luther King Drive
513-569-7861
Fax: 513-569-7620

TECHNOLOGY DEVELOPER CONTACTS:
Barry Dellinger or John Graham
Environmental Sciences and Engineering Group
University of Dayton Research Institute
300 College Park
Dayton, OH 45469-0132
513-229-2846
Fax: 513-229-2503

The SITE Program assesses but does not approve or endorse technologies.

UNIVERSITY OF SOUTH CAROLINA
(In Situ Mitigation of Acid Water)

TECHNOLOGY DESCRIPTION:

The in situ acid water mitigation process addresses the acid drainage problem associated with exposed sulfide-bearing minerals from sources including mine waste rock and abandoned metallic mines. Acid drainage forms under natural conditions when iron disulfides are exposed to the atmosphere and water, spontaneously oxidizing them to produce a complex of highly soluble iron sulfates and salts. These salts hydrolyze to produce an acid-, iron-, and sulfate-enriched drainage that adversely affects the environment.

The in situ mitigation strategy modifies the hydrology and geochemical conditions of the site through land surface reconstruction and selective placement of limestone.

Limestone is used as the alkaline source material because it has long-term availability, is generally inexpensive, and is safe to handle. For the chemical balances to be effective, the site must receive enough rainfall to produce seeps or drainages that continually contact the limestone. Rainfall, therefore, helps to remediate the site, rather than increasing the acid drainage.

During mine construction, lysimeters and limestone chimneys are installed to collect surface runoff and funnel it into the waste rock dump. Acidic material is capped with impermeable material to divert water from the

Overview of Site Lysimeters

The SITE Program assesses but does not approve or endorse technologies.

acid cores. This design causes the net acid load to be lower than the alkaline load, resulting in benign, nonacid drainage.

WASTE APPLICABILITY:

The technology mitigates acid drainage from abandoned waste dumps and mines. It can be applied to any site in a humid area where limestone is available.

STATUS:

This technology was accepted into the SITE Emerging Technology Program in March 1990. Studies under the Emerging Technology Program are complete. A peer-reviewed journal article has been prepared and submitted.

For the SITE evaluation, six large-scale lysimeters (12 feet wide, 8 feet high, and 16 feet deep) were constructed and lined with 20-mil polyvinyl chloride plastic (see photograph on previous page). The lysimeters drained through an outlet pipe into 55-gallon collection barrels. Piezometers in the lysimeter floor monitored the hydrology and chemistry of the completed lysimeter. During June 1991, 50 tons of acid-producing mine waste rock was packed into each lysimeter.

The effluent from each lysimeter was monitored for 1 year to establish a quality baseline. In the second phase of the study, selected lysimeters were topically treated, maintaining two lysimeters as controls to compare the efficacy of the acid abatement strategy. In addition, a rain gauge was installed at the site for mass balance measurements. An ancillary study correlating laboratory and field results is complete.

In the last phase of the 3-year study, little if any leachate was collected due to drought conditions in the southeast U.S. With the return of normal rainfall, sufficient leachate was collected to compare the treated lysimeters against the controls to evaluate the treatment's effectiveness. The treated lysimeters, in general, showed a 20 to 25 percent reduction in acid formation. The acidities measured about 10,000 milligrams per liter (mg/L) for the untreated lysimeters, while acidities from the treated lysimeters measured about 7,000 mg/L. This study was conducted on a very high acid-producing waste rock, representing a near worst-case situation. The process should be more successful on milder acid sources.

FOR FURTHER INFORMATION:

EPA PROJECT MANAGER:
Roger Wilmoth
U.S. EPA
National Risk Management Research Laboratory
26 West Martin Luther King Drive
Cincinnati, OH 45268
513-569-7509
Fax: 513-569-7787

TECHNOLOGY DEVELOPER CONTACT:
Frank Caruccio
Department of Geological Sciences
University of South Carolina
Columbia, SC 29208
803-777-4512
Fax: 803-777-6610

The SITE Program assesses but does not approve or endorse technologies.

UNIVERSITY OF WASHINGTON
(Adsorptive Filtration)

TECHNOLOGY DESCRIPTION:

Adsorptive filtration removes inorganic contaminants (metals) from aqueous waste streams. An adsorbent ferrihydrite is applied to the surface of an inert substrate such as sand, which is then placed in one of three vertical columns (see figure below). The contaminated waste stream is adjusted to a pH of 9 to 10 and passed through the column. The iron-coated sand grains in the column act simultaneously as a filter and adsorbent. When the column's filtration capacity is reached (indicated by particulate breakthrough or column blockage), the column is backwashed. When the adsorptive capacity of the column is reached (indicated by breakthrough of soluble metals), the metals are removed and concentrated for subsequent recovery with a pH-induced desorption process. Sand can be coated by ferrihydrite formed when either iron nitrate or iron chloride salts react with sodium hydroxide. The resulting ferrihydrite-coated sand is insoluble at a pH greater than 1; thus, acidic solutions can be used in the regeneration step to ensure complete metal recovery. The system does not appear to lose treatment efficiency after numerous regeneration cycles. Anionic metals such as arsenate, chromate, and selenite can be removed from the solution by treating it at a pH near 4 and regenerating it at a high pH. The system has an empty bed retention time of 2 to 5 minutes.

This technology offers several advantages over conventional treatment technologies. These advantages are its ability to (1) remove both dissolved and suspended metals from the waste stream, (2) remove a variety of metal complexes, (3) work in the presence of high concentrations of background ions, and (4) remove anionic metals.

This adsorptive filtration process removes inorganic contaminants, consisting mainly of metals, from aqueous waste streams. It can be applied to aqueous waste streams with a wide range of contaminant concentrations and pH values.

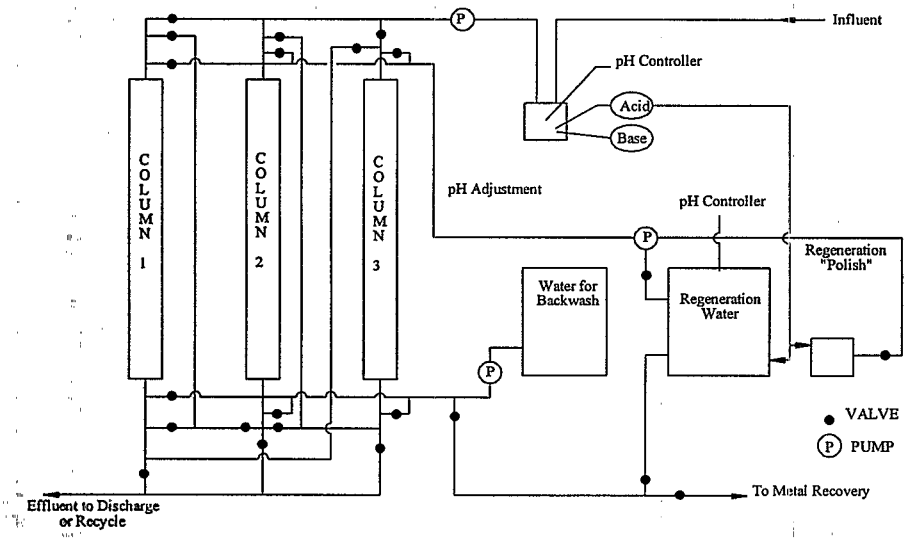

Adsorptive Filtration Treatment System

The SITE Program assesses but does not approve or endorse technologies.

STATUS:

This technology was accepted into the SITE Emerging Technology Program in January 1988; the evaluation was completed in 1992. The Emerging Technology Report (EPA/540/R-93/515), Emerging Technology Summary (EPA/540/SR-93/515), and Emerging Technology Bulletin (EPA/540/F-92/008) are available from EPA.

During the SITE evaluation, synthetic solutions containing cadmium, copper, or lead at concentrations of 0.5 part per million (ppm) were treated in packed columns using 2-minute retention times. After approximately 5,000 bed volumes were treated, effluent concentrations were about 0.025 ppm for each metal, or a 95 percent removal efficiency. The tests were stopped, although the metals were still being removed. In other experiments, the media were used to adsorb copper from wastewater containing about 7,000 milligrams per liter (mg/L) copper.

The first batch of regenerant solutions contained cadmium and lead at concentrations of about 500 ppm. With initial concentrations of 0.5 ppm, this represents a concentration factor of about 1,000 to 1. Data for the copper removal test have not been analyzed. At a flow rate yielding a 2-minute retention time, the test would have taken about 7 days of continuous flow operation to treat 5,000 bed volumes. Regeneration took about 2 hours.

The system has also been tested for treatment of rinse waters from a copper-etching process at a printed circuit board shop. The coated sand was effective in removing mixtures of soluble, complexed, and particulate copper, as well as zinc and lead, from these waters. When two columns were used in series, the treatment system was able to handle fluctuations in influent copper concentration from less than 10 mg/L up to several hundred mg/L.

Groundwater from Western Processing, a Superfund site near Seattle, Washington, was treated to remove both soluble and particulate zinc.

FOR FURTHER INFORMATION:

EPA PROJECT MANAGER:
Norma Lewis
U.S. EPA
National Risk Management Research Laboratory
26 West Martin Luther King Drive
Cincinnati, OH 45268
513-569-7665
Fax: 513-569-7787

TECHNOLOGY DEVELOPER CONTACT:
Mark Benjamin
University of Washington
Department of Civil Engineering
P.O. Box 352700
Seattle, WA 98195-2700
206-543-7645
Fax: 206-685-9185

The SITE Program assesses but does not approve or endorse technologies.

UV TECHNOLOGIES, INC.
(formerly ENERGY AND ENVIRONMENTAL ENGINEERING, INC.)
(PhotoCAT™ Process)

TECHNOLOGY DESCRIPTION:

The PhotoCAT™ process photochemically oxidizes organic compounds in wastewater using hydrogen peroxide, a chemical oxidant, ultraviolet (UV) radiation, and a photocatalyst. The photochemical reaction has the potential to reduce high concentrations (200,000 or more parts per million [ppm]) of organics in water to nondetectable levels. The energy from UV radiation is predominantly absorbed by the organic compound and the oxidant, making both species reactive. The process can be used as a final treatment step to reduce organic contamination in industrial wastewater and groundwater to acceptable discharge limits.

The existing bench-scale system treats solutions containing up to several thousand ppm of total organic carbon at a rate of 3 gallons per minute. The bench-scale system consists of a photochemical reactor, where oxidation occurs, and associated tanks, pumps, and controls. The UV lamps are high-intensity lamps that penetrate the wastewater more effectively. The portable, skid-mounted system's design depends on the chemical composition of the wastewater or groundwater being treated.

Typically, the contaminated wastewater is pumped through a filter unit to remove suspended particles. Next, the filtrate is mixed with stoichiometric quantities of hydrogen peroxide. Finally, this mixture is fed to the photochemical reactor and irradiated. The overall reaction is as follows:

$$C_aH_bX + [2a + 0.5(b - 1)]H_2O_2 \xrightarrow{h\nu} aCO_2 + [2a + (b - 1)]H_2O + HX$$

where C_aH_bX represents a halogenated contaminant in the aqueous phase. Reaction products are carbon dioxide, water, and the appropriate halogen acid. Reaction kinetics depend on (1) contaminant concentration, (2) peroxide concentration, (3) irradiation dose, and (4) radiation spectral frequency.

WASTE APPLICABILITY:

The PhotoCAT™ process treats industrial wastewater and groundwater containing organics at concentrations up to several thousand ppm. Destruction efficiencies greater than two orders of magnitude have been obtained for chlorobenzene, chlorophenol, and phenol, with low to moderate dose rates and initial concentrations of 200 ppm. Destruction efficiencies of three orders of magnitude have been demonstrated on simulated industrial waste streams representative of textile dyeing operations, with higher dose rates and an initial concentration of 200 ppm.

STATUS:

Studies of the PhotoCAT™ process under the SITE Emerging Technology Program are complete, and the technology has been invited to participate in the SITE Demonstration Program. The Emerging Technology Report (EPA/540/SR-92/080), Emerging Technology Bulletin (EPA/540/F-92/004), and Emerging Technology Summary (EPA/540/SR-92/080) are available from EPA.

Work involving the on-line production of oxidants and the effectiveness of the photocatalytic substrate is underway under funding from EPA Small Business Industry Research Phase II and Phase I awards.

The SITE Program assesses but does not approve or endorse technologies.

Representative results from recent trials using the PhotoCAT™ process are summarized in the table below. Results are shown as the electric energy dose per gram-mole of initial contaminant to cause one decade of contaminant destruction.

Contaminant*	Dose (kW-hr/ gmole/decade)**
Chlorobenzene	7
Trichloroethene	5
Trichloroethane [500]	1
Tetrachloroethene	6
1,1,1-Trichloroethane	33
1,1,1-Trichloroethene [1,000]	7
Benzene, toluene, ethylbenzene, & xylene	5
Reactive Black Dye 5	26
Direct Yellow Dye 106	103
Direct Red Dye 83	31
Reactive Blue Dye 19	50
1-Chloronaphthalene [15]	27
Ethylene, diamine, & triacetic acid	17
Methanol	3
Textile waste (sulfur & indigo dyes) [740]	11
Textile waste (fiber reactive dyes) [270]	7
Chemical waste (formaldehyde & thiourea) [8,200]	1

* All are 100 parts per million, except as noted
** kilowatt-hour per gram-mole per decade

The technology has been improved since the EPA reports were published. These improvements include (1) using the UV lamp as the energy source; (2) improving the photochemical reactor design; (3) improving the lamp design, including lamp intensity and spectral characteristics; and (4) fixing the catalyst.

A cost-competitive PhotoCAT™ system can be designed and built to treat industrial wastewater with contaminant levels of 10 to 10,000 ppm.

FOR FURTHER INFORMATION:

EPA PROJECT MANAGER:
Ronald Lewis
U.S. EPA
National Risk Management Research Laboratory
26 West Martin Luther King Drive
Cincinnati, OH 45268
513-569-7856
Fax: 513-569-7105

TECHNOLOGY DEVELOPER CONTACTS:
James Porter or John Roll
UV Technologies, Inc.
P.O. Box 410185 or 410186
East Cambridge, MA 02141-0002
617-666-5500
Fax: 617-666-5802

The SITE Program assesses but does not approve or endorse technologies.

WESTERN PRODUCT RECOVERY GROUP, INC.

(Coordinate, Chemical Bonding, and Adsorption Process)

TECHNOLOGY DESCRIPTION:

The coordinate, chemical bonding, and adsorption (CCBA) process converts heavy metals in soils, sediments, and sludges to nonleaching silicates. The process can also oxidize organics in the waste stream and incorporate the ash into the ceramic pellet matrix (see figure below). The solid residual consistency varies from a soil and sand density and size distribution to a controlled size distribution ceramic aggregate form. The residue can be placed back in its original location or used as a substitute for conventional aggregate. The process uses clays with specific cation exchange capacity as sites for physical and chemical bonding of heavy metals to the clay.

The process is designed for continuous flow. The input sludge and soil stream are carefully ratioed with specific clays and then mixed in a high-intensity mechanical mixer. The mixture is then densified and formed into green or unfired pellets of a desired size. The green pellets are then direct-fired in a rotary kiln for approximately 30 minutes. The pellet temperature slowly rises to 2,000°F, converting the fired pellet to the ceramic state. Organics on the pellet's surface are oxidized, and organics inside the pellet are pyrolyzed as the temperature rises. As the pellets reach 2,000°F, the available silica sites in the clay chemically react with the heavy metals in the soil and sludge to form the final metal silicate product.

The process residue is an inert ceramic product, free of organics, with metal silicates providing a molecular bonding structure that precludes leaching. The kiln off-gas is processed in an afterburner and wet scrub system before it is released into the atmosphere. Excess scrub solution is recycled to the front-end mixing process.

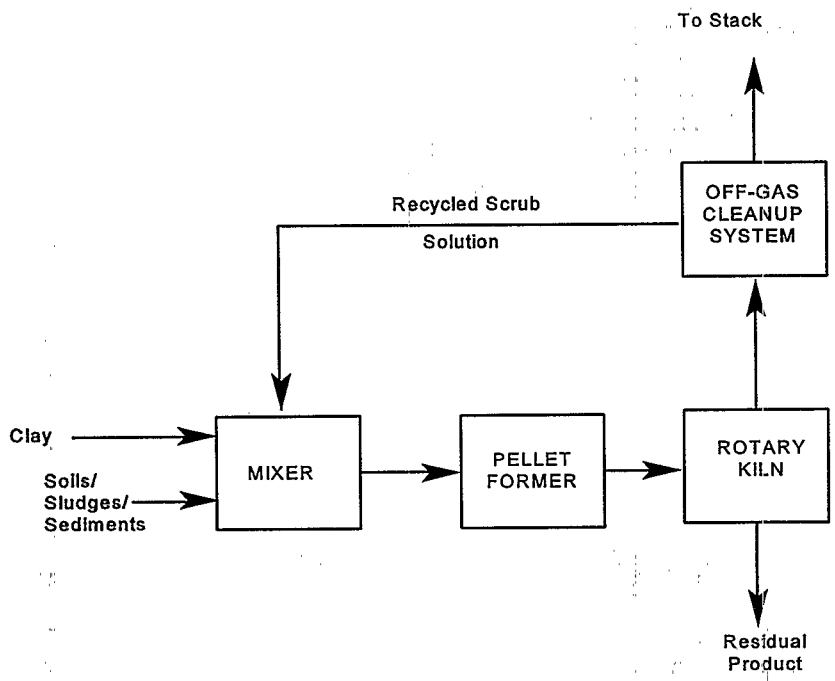

Coordinate, Chemical Bonding, and Adsorption (CCBA) Process

The SITE Program assesses but does not approve or endorse technologies.

WASTE APPLICABILITY:

The CCBA process has been demonstrated commercially on metal hydroxide sludges at a throughput of 70 wet tons per month, based on an 8-hour day, for a 25 percent solid feed. This process can treat wastewater sludges, sediments, and soils contaminated with most mixed organic and heavy metal wastes.

STATUS:

The CCBA process was accepted into the SITE Emerging Technology Program in January 1991. Under this program, the CCBA technology has been modified to include soils contaminated with both heavy metals and most organics. The SITE studies were completed at a pilot facility with a capacity of 10 pounds per hour. Proof tests using contaminated soil have been completed. The Emerging Technology Report, Emerging Technology Summary, and Emerging Technology Bulletin will be available from EPA in early 1997.

FOR FURTHER INFORMATION:

EPA PROJECT MANAGER:
Vince Gallardo
U.S. EPA
National Risk Management Research Laboratory
26 West Martin Luther King Drive
Cincinnati, OH 45268
513-569-7176
Fax: 513-569-7620

TECHNOLOGY DEVELOPER CONTACTS:
Donald Kelly
Western Product Recovery Group, Inc.
P.O. Box 79728
Houston, TX 77279
713-533-9321
Fax: 713-533-9434

Bert Elkins
Western Product Recovery Group, Inc.
10626 Cerveza Drive
Escondido, CA 92026
619-749-8856
Fax: 619-749-8856

The SITE Program assesses but does not approve or endorse technologies.

ROY F. WESTON, INC.
(Ambersorb® 563 Adsorbent)

TECHNOLOGY DESCRIPTION:

Ambersorb® 563 adsorbent is a regenerable adsorbent that treats groundwater contaminated with hazardous organics (see figure below). Ambersorb 563 adsorbent has 5 to 10 times the capacity of granular activated carbon (GAC) for low concentrations of volatile organic compounds (VOC).

Current GAC adsorption techniques require either disposal or thermal regeneration of the spent carbon. In these cases, the GAC must be removed from the site and shipped as a hazardous material to the disposal or regeneration facility.

Ambersorb 563 adsorbent has unique properties that provide the following benefits:

- Ambersorb 563 adsorbent can be regenerated on site using steam, thus eliminating the liability and cost of off-site regeneration or disposal associated with GAC treatment. Condensed contaminants are recovered through phase separation.
- Because Ambersorb 563 adsorbent has a much higher capacity than GAC for volatile organics (at low concentrations), the process can operate for significantly longer service cycle times before regeneration is required.

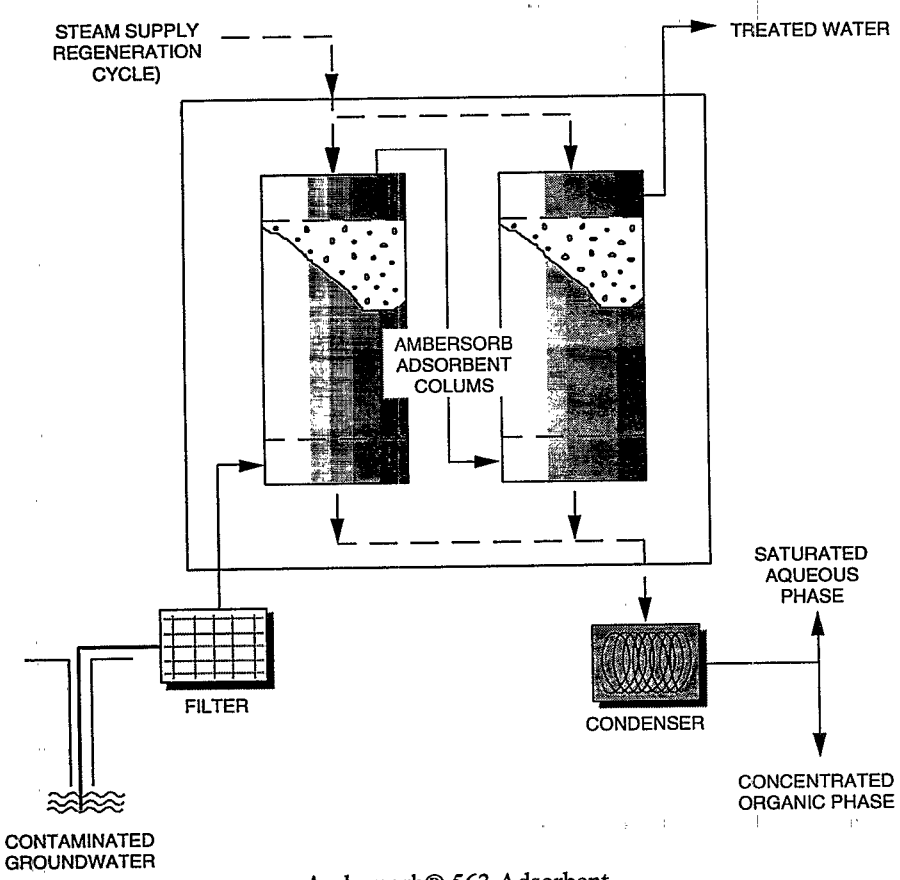

Ambersorb® 563 Adsorbent

The SITE Program assesses but does not approve or endorse technologies.

- Ambersorb 563 adsorbent can operate at higher flow rate loadings than GAC, which translates into a smaller, more compact system.
- Ambersorb 563 adsorbents are hard, nondusting, spherical beads with excellent physical integrity, eliminating handling problems and attrition losses typically associated with GAC.
- Ambersorb 563 adsorbent is not prone to bacterial fouling.
- Ambersorb 563 adsorbent has extremely low ash levels.

In addition, the Ambersorb 563 carbonaceous adsorbent-based remediation process can eliminate the need to dispose of by-products. Organics can be recovered in a form potentially suitable for immediate reuse. For example, removed organics could be burned for energy in a power plant.

WASTE APPLICABILITY:

Ambersorb 563 adsorbent is applicable to any water stream containing contaminants that can be treated with GAC, such as 1,2-dichloroethane, 1,1,1-trichloroethane, tetrachloroethene, vinyl chloride, xylene, toluene, and other VOCs.

STATUS:

This technology was accepted into the SITE Emerging Technology Program in 1993. The Emerging Technology Bulletin (EPA/540/F-95/500), the Emerging Technology Summary (EPA/540/SR-95/516), and the Emerging Technology Report (EPA/540/R-95/516) are available from EPA.

The Ambersorb 563 technology evaluation was conducted at the former Pease Air Force Base in Newington, New Hampshire. The groundwater contained vinyl chloride, 1,1-dichloroethene, and trichloroethene. The field study was conducted over a 12-week period. The tests included four service cycles and three steam regenerations. The effluent from the Ambersorb adsorbent system consistently met drinking water standards. On-site steam regeneration demonstrated that the adsorption capacity of the Ambersorb system remained essentially unchanged following regeneration.

FOR FURTHER INFORMATION:

EPA PROJECT MANAGER:
Ronald Turner
U.S. EPA
National Risk Management Research Laboratory
26 West Martin Luther King Drive
Cincinnati, OH 45268
513-569-7775
Fax: 513-569-7620

TECHNOLOGY DEVELOPER CONTACTS:
John Thoroughgood
Roy F. Weston, Inc.
1 Weston Way
West Chester, PA 19380-1499
610-701-3728
Fax: 610-701-5129

Deborah Plantz
Rohm and Haas Company
5000 Richmond Street
Philadelphia, PA 19137
215-537-4061
Fax: 215-537-4157
E-mail: MAHZDP@ROHMHAAS.COM

Note: Ambersorb® is a registered trademark of Rohm and Haas Company.

The SITE Program assesses but does not approve or endorse technologies.

TABLE 2

Ongoing SITE Emerging Technology Program Projects as of October 1998

Developer	Technology	Technology Contact	EPA Project Manager	Applicable Waste Media	Applicable Waste	
					Inorganic	Organic
Electrokinetics, Inc., Baton Rouge, LA	In Situ Bioremediation by Electrokinetic Injection	Elif Acar 504-753-8004	Randy Parker 513-569-7271	Soil, Sludge, Sediment	Heavy Metals	Nonspecific Organics
Energia, Inc. Princeton, NJ	Reductive Thermal and Photo-Thermal Oxidation	Dr. Moshe Lavid 609-799-7970	Michelle Simon 513-569-7469	Waste Streams	Not Applicable	Chlorinated Hydrocarbons
Geo-Microbial Technologies, Inc. Ochelata, OK	Metals Release and Removal from Wastes	Donald Hitzman 918-535-2281	Jack Hubbard 513-569-7507	Soil, Sludge, Sediment	Metals	Not Applicable
IT Corporation, Cincinnati, OH	Oxygen Microbubble In Situ Bioremediation	Douglas Jerger 423-690-3211 ext. 2803	Ronald Lewis 513-569-7856	Groundwater	Not Applicable	Petroleum Hydrocarbons, VOC, SVOCs
Phytokinetics, Inc., North Logan, UT	Phytoremediation of Contaminated Soils	Ari Ferro 801-750-0985	Steven Rock 513-569-7149	Soil	Not Applicable	PCP, PAHs, Chlorinated Solvents, Insecticides, Nitroaromatic Explosives
Pintail Systems, Inc., Aurora, CO	Biomineralization of Metals	Leslie Thompson 303-367-8443	Ronald Lewis 513-569-7856	Soil, Sludge, Sediment, Acid Mine Drainage	Heavy Metals	Not Applicable
Pulse Sciences, Inc., San Leandro, CA	X-Ray Treatment of Organically Contaminated Soils	Vernon Bailey 510-632-5100	George Moore 513-569-7991	Soil	Not Applicable	VOCs, SVOCs, PCBs

TABLE 2 (Continued)
Ongoing SITE Emerging Technology Program Projects as of October 1998

Developer	Technology	Technology Contact	EPA Project Manager	Applicable Waste Media	Applicable Waste	
					Inorganic	Organic
Thermo Nutech, Inc. (formerly TMA Eberline/ ThermoAnalytical) Albuquerque, NM	Segmented Gate System for Soil with Radionuclides	Jeff Brown 423-481-0683	Joan Mattox 513-569-7624	Soil, Sand, Dry Sludge	Gamma Ray-emitting Radionuclides	Not Applicable
University of Houston, Houston, TX	Concentrated Chloride Extraction and Recovery of Lead	Dennis Clifford 713-743-4266	Terry Lyons 513-569-7589	Soil	Lead	Not Applicable
University of Wisconsin-Madison, Madison, WI	Photoelectrocatalytic Degradation and Removal	Marc Anderson 608-262-2674 Charles Hill, Jr. 608-263-4593	Vince Gallardo 513-569-7176	Groundwater, Aqueous Waste Streams	Heavy Metals	Dissolved Organics

ELECTROKINETICS, INC.

(In Situ Bioremediation by Electrokinetic Injection)

TECHNOLOGY DESCRIPTION:

In situ bioremediation is the process of introducing nutrients into biologically active zones (BAZ). The nutrients are usually introduced by pumping recirculated groundwater through the BAZ, relying on hydraulic gradients or the permeability of the BAZ. However, heterogeneous aquifers often hinder the introduction of the nutrients. For example, areas with higher permeability result in preferential flow paths, leading to incomplete biological treatment in other areas. The inability to uniformly introduce nutrients and other additives, such as surfactants and cometabolites, is recognized as a hindrance to successful implementation of in situ bioremediation.

Electrokinetics, Inc. (Electrokinetics), has developed an electrokinetic remediation technology that stimulates and sustains in situ bioremediation for the treatment of organics. The technology involves applying to soil or groundwater a low-level direct current (DC) electrical potential difference or an electrical current using electrodes placed in an open or closed flow arrangement. Groundwater or an externally supplied processing fluid is used as the conductive medium. The low-level DC causes physical, chemical and hydrological changes in both the waste and the conductive medium, thereby enabling uniform transport of process additives and nutrients into the BAZ. The process is illustrated in the diagram below.

Electrokinetic soil processing technologies were designed to overcome problems associated with heterogeneous aquifers, especially those problems that result in incomplete biological treatment. For example, the rate of nutrient and additive transport under electrical gradients is at least one order of magnitude greater than that achieved under hydraulic gradients.

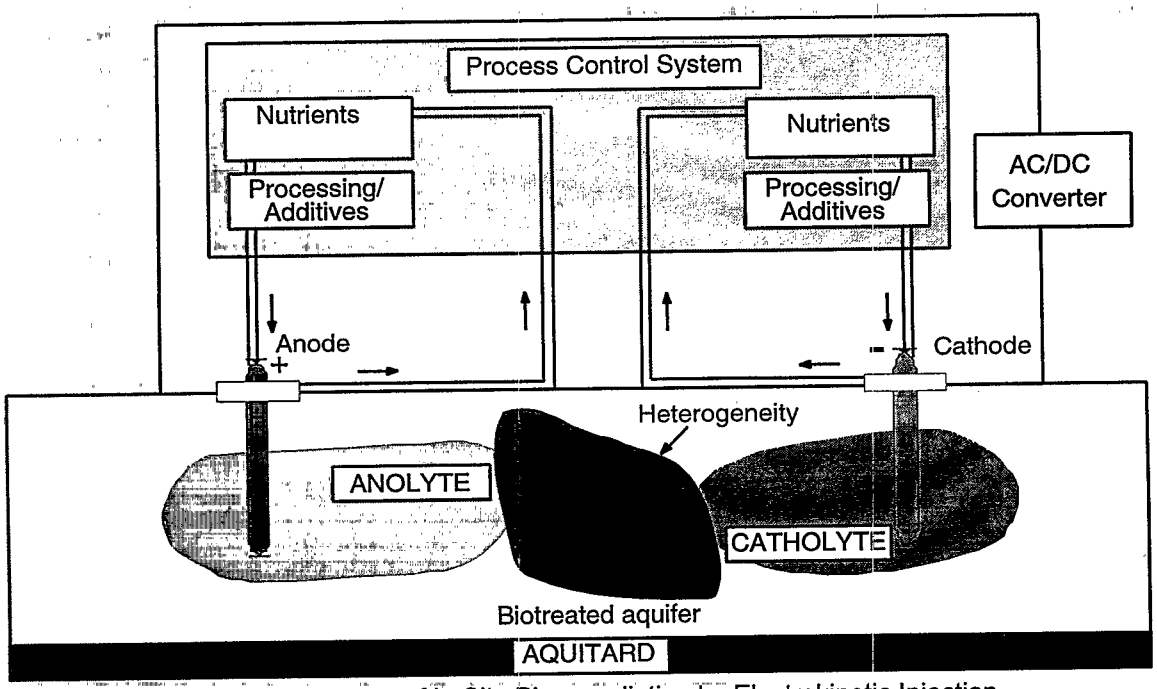

Schematic Diagram of In Situ Bioremediation by Electrokinetic Injection

The SITE Program assesses but does not approve or endorse technologies.

WASTE APPLICABILITY:

In situ electrokinetic injection can be used for any waste that can be treated by conventional bioremediation techniques. The Electrokinetics, Inc. system facilitates in situ treatment of contaminated subsurface deposits, sediments, and sludges. The technology can also be engineered to remove inorganic compounds through electromigration and electroosmosis, while process additives and nutrients are added to the processing fluids to enhance bioremediation of organic compounds.

STATUS:

This technology was accepted into the SITE Emerging Technology Program in 1995. Pilot-scale studies under the Emerging Technology Program will be used to develop operating parameters and to demonstrate the efficiency and cost-effectiveness of the technology during a full-scale application. The SITE evaluation may take place in 1999 at a military base or a U.S. Department of Energy (DOE) site.

In a Phase-I study conducted for DOE, Electrokinetics, Inc., demonstrated that nutrient and process additives could be transported in and across heterogeneous areas in aquifers at rates that could sustain in-situ bioremdiation. During the study, ion migration rates, which were on the order of 8 to 20 centimeters per day, exceeded the electroosmotic rate, even in a kaolinite clay. The ion migration also produced a reasonably uniform distribution of inorganic nitrogen, sulfur, and phosphorous additives across the soil mass boundaries. These results are significant and demonstrate that electrokinetic injection techniques may potentially be used for the injection of diverse nutrients in low permeability soils as well as heterogeneous media. Electrokinetics, Inc., recently completed bench- and pilot-scale tests, which determined the feasibility of enhancing the bioremediation of trichloroethylene and toluene by electrokinetic injection. The process of in situ bioremediation by electrokinetic injection was inspired by extensive research work conducted by Electrokinetics, Inc., using the electrochemical process to remediate soils contaminated with heavy metals and radionuclides. In 1994, Electrokinetics, Inc., was commissioned by the U.S. Department of Defense (DoD) to demonstrate its technology in a lead-contaminated creek bed at an inactive firing range in Fort Polk, Louisiana. The study was supported under the U.S. EPA SITE Demonstration Program. This pilot-scale field demonstration represents the first comprehensive scientific study worldwide for the application of electrokinetic separation technology applied to the remediation of heavy metals in soils. Electrokinetics, Inc., successfully removed up to 98 percent of the lead from the firing range soil and received the 1996 Small Business Innovation Research (SBIR) Phase II Quality Award from DoD for technical achievement.

FOR FURTHER INFORMATION:

EPA PROJECT MANAGER:
Randy Parker
U.S. EPA
National Risk Management Research Laboratory
26 West Martin Luther King Drive
Cincinnati, OH 45268
513-569-7271
Fax: 513-569-7571

TECHNOLOGY DEVELOPER CONTACT:
Elif Acar
President
Electrokinetics, Inc.
11552 Cedar Park Avenue
Baton Rouge, LA 70809
504-753-8004
Fax: 504-753-0028
E-mail: ekinc@pipeline.com

The SITE Program assesses but does not approve or endorse technologies.

ENERGIA, INC.

(Reductive Thermal and Photo-Thermal Oxidation Processes for Enhanced Conversion of Chlorocarbons)

TECHNOLOGY DESCRIPTION:

Two innovative processes, Reductive Thermal Oxidation (RTO) and Reductive Photo-Thermal Oxidation (RPTO), are designed to safely and cost-effectively convert chlorinated hydrocarbons (ClHC) into environmentally benign and useful materials in the presence of a reducing atmosphere. Both processes have evolved from Energia, Inc.'s, Reductive Photo-Dechlorination (RPD) technology, which does not permit the presence of air (oxygen).

The RTO/RPTO processes treat air streams laden with ClHCs. RTO converts ClHCs at moderate temperatures by cleaving carbon-chlorine bonds in the absence of ultraviolet light. RPTO operates under similar conditions but in the presence of ultraviolet light. Subsequent reactions between ensuing radicals and the reducing gas result in chain-propagation reactions. The presence of air (oxygen) during the conversion process accelerates the overall reaction rate without significant oxidation. The final products are useful hydrocarbons (HC) and environmentally safe materials, including hydrogen chloride, carbon dioxide, and water.

The RTO/RPTO processes are shown in the figure below. The process consists of six main units: (1) input/mixer (2) photo-thermal chamber (3) scrubber (4) separator (5) product storage/sale and (6) conventional catalytic oxidation unit. Air laden with ClHCs is mixed with reducing gas and passed into a photo-thermal chamber, which is unique to the RTO/RPTO technology. In this chamber, the mixture is heated to moderate temperatures to sustain the radical chain reactions. Depending on the physical and chemical characteristics of the particular ClHCs being treated, conversion can take place in two ways: the RTO process is purely thermal, and the RPTO process is photo-thermal. After suitable residence time, HCl is removed by passing the stream through an aqueous scrubber. The stream can then be treated in an optional second stage, or it can be separated and sent to storage.

Excess reducing gas is recycled, and residual ClHCs, HCs, and CO_2 are either exhausted, or if needed, treated by catalytic oxidation. Volatile hydrocarbons can also be recycled as an energy source for process heating, if partial oxidation at the photo-thermal chamber does not generate enough heat.

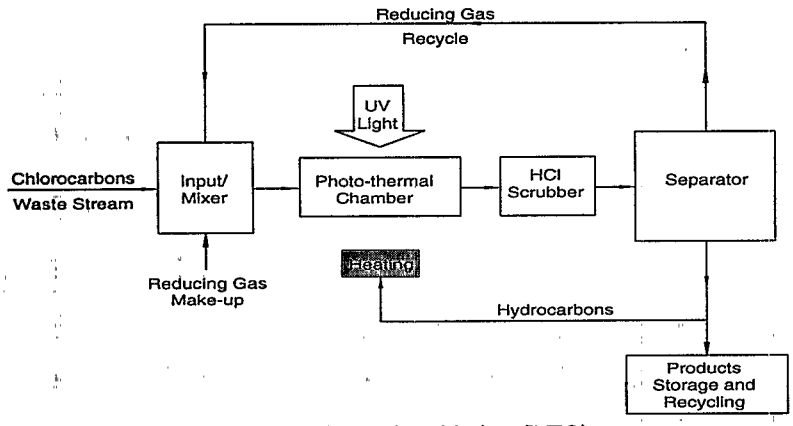

Reductive Thermal Oxidation (RTO)
and Photo-Thermal Oxidation (RPTO) Process

The SITE Program assesses but does not approve or endorse technologies.

WASTE APPLICABILITY:

The RTO/RPTO processes are specifically applicable to treatment of air streams laden with volatile C1HCs, such as dichloromethane (DCM), methyl chloride, dichloroethane (DCA), trichloroethane (TCA), trichloroethylene (TCE), dichloroethylene (DCE), and chloroform.

These processes provide cost-effective, on-site conversion/dechlorination of C1HCs into environmentally acceptable products. They may be operated as a stand-alone or as an add-on to a remediation train. Potential commercial applications include the following:

- Direct treatment of air streams contaminated with hazardous waste C1HCs discharged from soil vapor extraction (SVE) operations
- Direct treatment of air streams containing volatile organic compounds (VOC) vented from industrial hoods and stacks
- On-site treatment of C1HCs and VOCs released by thermal desorption from contaminated soils
- On-site treatment of groundwater and surface water contaminated with VOCs and C1HCs in conjunction with air-stripping/air-sparging operations
- Regeneration of activated carbon canisters loaded with C1HCs

ENERGIA's innovative gas-phase photo-processes are applicable to: air, water, and soil. They can be used alone or in conjunction with other prospective technologies such as, SVE, thermal desorption, air sparging, and air stripping. In essence, they provide the final stage for environmentally safe destruction of C1HCs or VOCs present in various discharge streams. These compounds are often released to the atmosphere without any treatment.

Laboratory-scale tests were completed on representative C1HCs: two saturated contaminants (DCA and TCA) and two unsaturated compounds (DCA and TCE). Further tests of TCE, DCE, and TCA were conducted on a prototype system. Percent conversion, percent dechlorination, and concentration of parent contaminants and products were determined as a function of reaction time for various compositions at several temperatures. Both processes have exhibited greater than 99 percent conversion/dechlorination with high selectivity towards salable hydrocarbon products (methane and ethane). The RPTO process has always outperformed the RTP one; however, its advantage seemed to diminish with increasing temperature.

A cost analysis based on experimental data was also performed. TCE was used as a representative contaminant. An extremely competitive cost was obtained. For example, the cost of treatment of 1,000 cubic feet of air contaminated with 10 and 1,000 parts per million of TCE is $0.13 and $0.33, respectively.

A pilot-scale field demonstration is expected to take place in 1999. After completion of the field demonstration, these processes will be available for commercialization.

FOR FURTHER INFORMATION:

EPA PROJECT MANAGER:
Michelle Simon
U.S. EPA
National Risk Management Research Laboratory
26 West Martin Luther King Drive
Cincinnati, OH 45268
513-569-7469
Fax: 513-569-7676

TECHNOLOGY DEVELOPER CONTACT:
Moshe Lavid
ENERGIA, Inc.
P.O. Box 470
Princeton, NJ 08542-470
609-799-7970
Fax: 609-799-0312

The SITE Program assesses but does not approve or endorse technologies.

GEO-MICROBIAL TECHNOLOGIES, INC.

(Metals Release and Removal from Wastes)

TECHNOLOGY DESCRIPTION:

Geo-Microbial Technologies, Inc., has developed an anaerobic biotreatment technology to release metals from liquefaction catalyst wastes. Such wastes are derived from spent coal and are also contaminated with complex organic compounds. The anaerobic metals release (AMR) technology may be adapted to treat other wastes contaminated with metals.

Current biohydrometallurgy systems use aerobic acidophilic bacteria, which oxidize mineral sulfides while making metals soluble and forming large amounts of acid. This aerobic process can result in acidic drainage from natural sources of metal sulfides. For example, acidophilic bacteria convert the pyrite and iron-containing minerals in coal into oxidized iron and sulfuric acid. The acid then makes the pyrite and other sulfide minerals more soluble resulting in stream and lake contamination due to acidification and an increase in soluble heavy metals.

The AMR technology operates anaerobically and at a near-neutral pH, employing anaerobic *Thiobacillus* cultures in conjunction with heterotrophic denitrifying bacterial cultures. The diverse culture of denitrifying bacteria consumes and treats multiple carbon sources, including some organic pollutants.

The anaerobic environment can be adjusted by introducing low levels of nitrate salts that function as an electron acceptor in the absence of oxygen. The nitrate salts provide an alternate electron acceptor and selectively enhance the remineralization process of the inherent denitrifying microflora. This process increases the population of the denitrifying bacterial population that releases the metals. Soils containing the released metals are then flooded with the dilute nitrate solutions. The improved anaerobic leaching solutions permeate the soils, allowing the microbial activity to make the metals soluble in the leachate. The nitrate concentration is adjusted so that the effluent is free of nitrate and the nitrate concentration is monitored so that the process operation can be closely controlled. Soluble metals in the leachate are easily recaptured, and the metal-free effluent is recycled within the process. The nitrate-based ecology of the process also has the added advantage of decreasing levels of sulfate-reducing bacteria and sulfide generation.

The versatility and low operating constraints of the AMR technology offer multiple process options. The technology can be adapted for in situ flooding or modified to flood a waste pile in a heap-leaching operation. The elimination of any aeration requirement also allows the process to be designed and considered for bioslurry applications. As a result, the technology offers a greater range of treatment applications for environmental waste situations that are often considered difficult to treat.

WASTE APPLICABILITY:

The AMR technology targets toxic metal-contaminated soils, sludges, and sediments, which can also be contaminated with other wastes, including hydrocarbons and organic pollutants. While metals are the primary pollutant treated, the biological system is also designed to degrade and remove associated organic contaminants.

The SITE Program assesses but does not approve or endorse technologies.

STATUS:

The technology was accepted into the SITE Emerging Technology Program in July 1994. Studies under the Emerging Technology Program will evaluate how effectively the AMR technology removes metals from soil.

FOR FURTHER INFORMATION:

EPA PROJECT MANAGER:
Jack Hubbard
U.S. EPA
National Risk Management Research Laboratory
26 West Martin Luther King Drive
Cincinnati, OH 45268
513-569-7507
Fax: 513-569-7620

TECHNOLOGY DEVELOPER CONTACT:
Donald Hitzman
Geo-Microbial Technologies, Inc.
East Main Street
P.O. Box 132
Ochelata, OK 74051
918-535-2281
Fax: 918-535-2564

The SITE Program assesses but does not approve or endorse technologies.

IT CORPORATION

(Formerly OHM Remediation Services Corporation)
(Oxygen Microbubble In Situ Bioremediation)

TECHNOLOGY DESCRIPTION:

The application of in situ microbial degradation of petroleum hydrocarbons (PHC) has become a common and widespread practice. The most common factor limiting the rate of in situ biodegradation of PHCs is the amount of oxygen available in the saturated and unsaturated zones. Therefore, OHM Remediation Services Corporation (OHM) has focused on developing techniques for delivering oxygen to the subsurface to enhance in situ microbial degradation of PHCs. OHM has extensive experience with oxygen delivery techniques such as bioventing and biosparging to enhance microbial degradation. Injection of oxygen microbubbles is being investigated by OHM as an oxygen delivery system for the in situ biodegradation of PHCs in the unsaturated and saturated zones. OHM has conducted laboratory tests and field demonstrations of the oxygen microbubble technology in conjunction with the U.S. EPA and the U.S. Armstrong Laboratories. Oygen microbubble technology (see figure elow) uses a continuously generated stream of oxygen and water solution containing low concentrations of a surfactant. A water stream containing about 200 milligrams per liter of surfactant is mixed with oxygen under pressure. The resulting oxygen and water mixture is pumped through a microbubble generator that produces a zone of high-energy mixing. The result is a 60 to 80 percent by volume dispersion of bubbles, with a typical bubble diameter ranging from 50 to 100 microns. The microbubble dispersion is then pumped through an injection well into the treatment zone. The microbubbles deliver oxygen to contaminated groundwater, providing an oxygen source for aerobic biodegradation of the contaminant by the indigenous microflora.

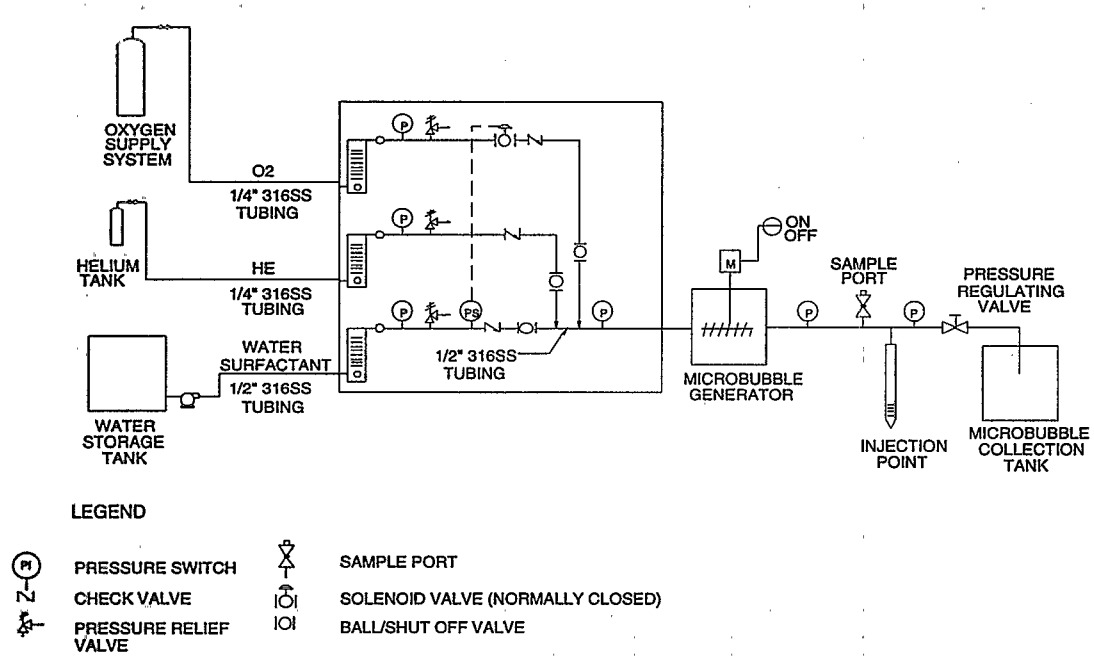

Oxygen Microbubble In Situ Bioremediation

The SITE Program assesses but does not approve or endorse technologies.

WASTE APPLICABILITY:

The process has successfully treated groundwater contaminated with a number of organic compounds including volatile organic compounds, semivolatile organic compounds, and petroleum hydrocarbons.

STATUS:

The Oxygen Microbubble In Situ Bioremediation process was accepted into the Emerging Technology Program in summer 1992. This process is being evaluated at a jet fuel spill site at Tyndall Air Force Base in Panama City, Florida.

The overall objective of this project is to evaluate the in situ application of the oxygen microbubble technology for bioremedation. The goals are to determine subsurface oxygen transfer to the groundwater, retention of the microbubble in the soil matrix, and biodegradation of the petroleum hydrocarbons present in the soil and groundwater.

A pilot test was performed at the site in 1995. The objective of the test was to determine the rate at which generated microbubbles could be injected into the surficial aquifer at the site. In addition, changes in the microbubbles and the aquifer during injection were monitored. Specific parameters monitored included the following:

- Microbubble quality, quantity, and stability
- Microbubble injection rate and pressure
- Lateral migration rates of microbubbles
- Lateral extent of migration of surfactant in the aquifer
- Lateral changes in dissolved oxygen concentration in the aquifer
- Rate of migration of tracer gas (helium) in the vadose zone
- Oxygen in the vadose zone

The pilot test verified that microbubbles can be injected into a shallow aquifer consisting of unconsolidated, fine-grained sediments. The study also verified that aquifer characteristics allowed the injection of the microbubble foam at rates of at least 1 gallon per minute. Continued injection of foam after about 45 minutes resulted in coalescence of the foam based on pressure measurements. The microbubble foam was observed to persist in the aquifer for long periods of time. This testing supported the use of oxygen microbubbles as an oxygen delivery system for in situ bioremediation.

The next testing phase at the site began in fall 1996. During this test, multiple injection points will be used to determine the maximum rate of foam injection while maintaining foam stability. Oxygen will be used as the gas for microbubble production. The rentention of oxygen microbubbles will be compared to sparged air to determine oxygen delivery efficiency.

FOR FURTHER INFORMATION:

EPA PROJECT MANAGER:
Ronald Lewis
U.S. EPA
National Risk Management Research Laboratory
26 West Martin Luther King Drive
Cincinnati, OH 45268
513-569-7856
Fax: 513-569-7105

TECHNOLOGY DEVELOPER CONTACT:
Douglas Jerger
IT Corporation
Technology Applications
304 Directors Drive
Knoxville, TN 37923
423-690-3211 ext. 2803
Fax: 423-694-9573

The SITE Program assesses but does not approve or endorse technologies.

PHYTOKINETICS, INC.

(Phytoremediation of Contaminated Soils)

TECHNOLOGY DESCRIPTION:

Phytoremediation is the use of plants for the in situ cleanup of contaminated soils, sediments, and water. The specific technology described in this profile is the use of grasses to remediate surface soils contaminated with organic chemical wastes. Many types of organic contaminants, including pentachlorophenol (PCP), biodegrade more rapidly in planted soils than in unplanted soils.

The ability of plants to enhance biodegradation is based, in part, on plant root exudates. Plants release into the soil organic chemical exudates (sugars, acids, alcohols, and proteins), which can enhance biodegradation in the following ways: (1) the exudates stimulate soil microorganisms in the rhizosphere (the zone immediately surrounding the plant root) by serving as a food source. Rhizosphere soils contain 10 to 100 times more metabolically active microorganisms than unplanted soils; (2) exudates from the roots contain enzymes that can transform organic contaminants; (3) exudates can stimulate cometabolic transformations of contaminants by soil microorganisms.

Another important factor in phytoremediation is that plants themselves can take up and detoxify certain organic contaminants. Plants can also stabilize soils against erosion by wind and water. Grasses appear to be ideal for phytoremediation of surface soils because their fibrous root systems form a continuous dense rhizosphere.

WASTE APPLICABILITY:

Organic chemical contaminants that are removed more rapidly in planted soils than unplanted soils include PCP, certain polynuclear aromatic hydrocarbons (PAH), chlorinated solvents,

Greenhouse-Scale Phytoremediation Study

Small-Scale Outdoor Study

The SITE Program assesses but does not approve or endorse technologies.

insecticides, and nitroaromatic explosives. For phytoremediation to be effective, soil contaminants must be in the surficial soil, within the root zone of plants (top 2 to 3 feet), and contaminants must be present at intermediate levels that are not toxic to the plants. Although phytoremediation may be cost-effective, especially for larger sites, it is slower than more intensive approaches (such as excavation or ex situ treatments), and may require several growing seasons.

STATUS:

This technology was accepted into the Emerging Technology Program in 1995 for a 2-year greenhouse and field trial. Under the Emerging Technology Program, Phytokinetics, Inc. (Phytokinetics), will demonstrate the technology's treatment effectiveness for surficial soils contaminated with PCP and PAHs from the McCormick & Baxter (M&B) Superfund site in Portland, Oregon. The plant species used is perennial ryegrass (*Lolium perenne*).

The study consists of two phases. The first phase, which began in March 1996, consists of a greenhouse study conducted under optimal conditions for plant growth. The second phase, which began in April 1996, is taking place in the field, at an area within the M&B site (see photographs on previous page). For both phases, contaminant removal rates are being compared in planted and unplanted (nutrified) soils, as well as in unplanted unamended soils. The latter treatment allows an assessment of the rates of natural (intrinsic) bioremediation. Preliminary results from the first phase suggest that plants accelerate initial rates of removal of PCP, chrysene, benzo(a)anthracene, and pyrene relative to controls.

Phytokinetics personnel have also conducted laboratory-scale studies using crested wheatgrass (*Agropyron cristatum*). The fate of uniformly radiolabeled PCP, added to soil at a concentration of 100 milligrams per kilogram (mg/kg), was compared in three planted and three unplanted systems. Employing a specifically designed flow-through test system, a budget was maintained for the PCP-derived radiolabel, and the extent of mineralization and volatilization of the radiolabel were monitored during a 155-day test.

In the unplanted systems, an average of 88 percent of the total radiolabel remained in the soil, and only 6 percent was mineralized. In the planted systems, 33 percent of the radiolabel remained in the soil, 22 percent was mineralized, and 36 percent was associated with plant tissue. Other tests using the same system were conducted with radiolabeled pyrene (with initial concentrations of 100 mg/kg soil). The onset of mineralization occurred sooner in planted systems (with a mean of 45 days) than in uplanted systems (with a mean of 75 days). However, the extent of radiolabeled pyrene mineralization was the same in the two types of systems.

FOR FURTHER INFORMATION:

EPA PROJECT MANAGER:
Steven Rock
U.S. EPA
National Risk Management Research Laboratory
28 West Martin Luther King Drive
Cincinnati, OH 45268
513-569-7149
Fax: 513-569-7105

TECHNOLOGY DEVELOPER CONTACT:
Ari Ferro
Phytokinetics, Inc.
1770 North Research Park Way
Suite 110
North Logan, UT 84341-1941
801-750-0985
Fax: 801-750-6296

The SITE Program assesses but does not approve or endorse technologies.

PINTAIL SYSTEMS, INC.
(Biomineralization of Metals)

TECHNOLOGY DESCRIPTION:

Pintail Systems, Inc. (PSI), has evaluated the use of bioremediation processes for in situ biomineralization of heavy metals in mine wastes. Biomineralization processes are part of a natural cycle in which minerals are continuously formed, transformed, and degraded. In situ biomineralization capitalizes on the role that microorganisms play in natural ore formation and involves accelerating the biological reactions to remediate waste.

During biomineralization, microorganisms initiate a complex series of reactions. Effective metal removal mechanisms are influenced by biologically catalyzed remineralization reactions. PSI's research indicates that biomineralization begins when microorganisms attach to the ore's surface, forming a "bioslime" layer. Soluble metals then bind to cell walls and extracellular products. Next, metal hydroxides, oxides, and carbonates precipitate into the bioslime layer as amorphous mineral precursors, which provide a template for further mineralization as they stabilize.

A microbial population for biomineralization may be used in either batch or continuous treatment mode for in situ bioremediation. In batch mode, bacteria and nutrient solutions may be applied directly to contaminated soil, sediments, or

2.5 million ton Spent Ore Cyanide Field Detox

Metals analysis before and after application of bacteria treatment solutions to the heap to degrade cyanide. Analysis of heap leachate solutions.

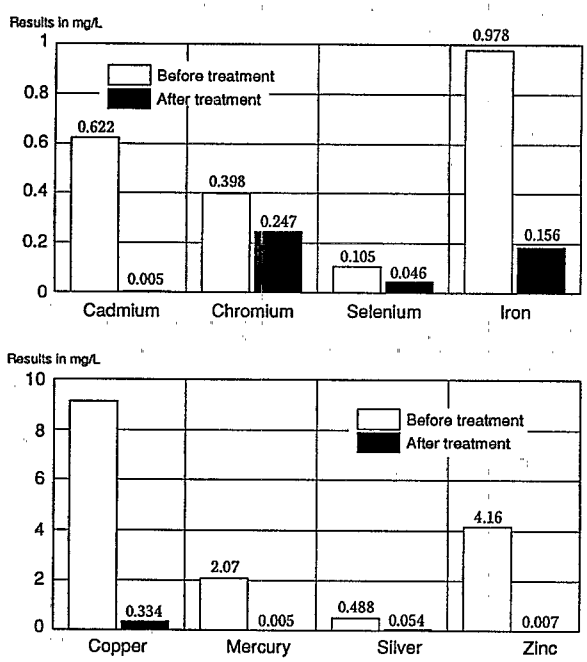

Biomineralization of Metals

The SITE Program assesses but does not approve or endorse technologies.

aqueous solutions to catalyze bioaccumulation and biomineralization. For continuous treatment, microorganisms may be immobilized in a porous matrix or fixed film reactor to remove metals from aqueous solutions.

WASTE APPLICABILITY:

The PSI biomineralization process is designed to treat solids (soils, sludges, and sediments) that contain heavy metals or organics. It can also be applied to acid rock drainage that occurs naturally or that results from mining or energy production operations. The process can be applied at battery waste sites, urban lead sites, mines, and metal production and fabrication sites.

The PSI technology was accepted into the Emerging Technology Program in 1995. Under the Emerging Technology Program, PSI intends to complete development of its biomineralization process, resulting in a field-ready in situ biomineralization technology. PSI will conduct batch and continuous treatment tests at its laboratory and pilot plant in Aurora, Colorado, using soils, ore, sludges, and tailings from several Superfund sites.

PSI has developed and applied full-scale detoxification processes for spent ore at several mines in the western United States. In addition to cyanide detoxification, metals have been removed or remineralized during treatment at the mines. PSI has also demonstrated biomineralization of metals in laboratory- and pilot-scale tests for mining industry clients at Idaho, Nevada, Arizona, California, Colorado, Mexico, and Canada, including the Summitville Mine Superfund site in Colorado. The results of using biomineralization is shown in the figure on the previous page.

FOR FURTHER INFORMATION:

EPA PROJECT MANAGER:
Ronald Lewis
U.S. EPA
National Risk Management Research Laboratory
26 West Martin Luther King Drive
Cincinnati, OH 45268
513-569-7856
Fax: 513-569-7105

TECHNOLOGY DEVELOPER CONTACT:
Leslie Thompson
Pintail Systems, Inc.
11801 E. 33rd Avenue, Suite C
Aurora, CO 80010
303-367-8443
Fax: 303-364-2120

The SITE Program assesses but does not approve or endorse technologies.

PULSE SCIENCES, INC.

(X-Ray Treatment of Organically Contaminated Soils)

TECHNOLOGY DESCRIPTION:

X-ray treatment of organically contaminated soils is based on in-depth deposition of ionizing radiation. Energetic photons (X-rays) collide with matter to generate a shower of lower-energy, secondary electrons within the contaminated waste material. These secondary electrons ionize and excite the atomic electrons, break up the complex contaminant molecules, and form highly reactive radicals. These radicals react with contaminants to form nonhazardous products such as water, carbon dioxide, and oxygen.

Other sources of ionizing radiation, such as ultraviolet radiation or direct electron beam processing, do not penetrate the treatable material deeply enough. Ultraviolet radiation heats only the surface layer, while a 1.5-million electron volt (MeV) charge penetrates about 4 millimeters into the soil. X-rays, however, penetrate up to 20 centimeters, allowing treatment of thicker samples. In situ treatment, which reduces material handling requirements, may also be possible with X-ray treatment.

An efficient, high-power, high-energy, linear induction accelerator (LIA) plus X-ray converter generates the X-rays used in the treatment process (see figure below). The LIA energy usually ranges from 8 to 10 MeV. A repetitive pulse of electrons 50 to 100 nanoseconds long is directed onto a cooled converter of high atomic number to efficiently generate X-rays. The X-rays penetrate and treat the organically contaminated soils.

The physical mechanism by which volatile organic compounds (VOC) and semivolatile organic compounds (SVOC) are removed primarily depends on the specific contaminant present. Because of the moisture in contaminated soil, sludge, and sediments, the shower of secondary electrons resulting from X-ray deposition produces both highly oxidizing hydroxyl radicals and highly reducing aqueous electrons. While hazardous by-products may form during X-ray treatment, contaminants and by-products, if found, may be completely converted at sufficiently high dose levels without undesirable waste residuals or air pollution.

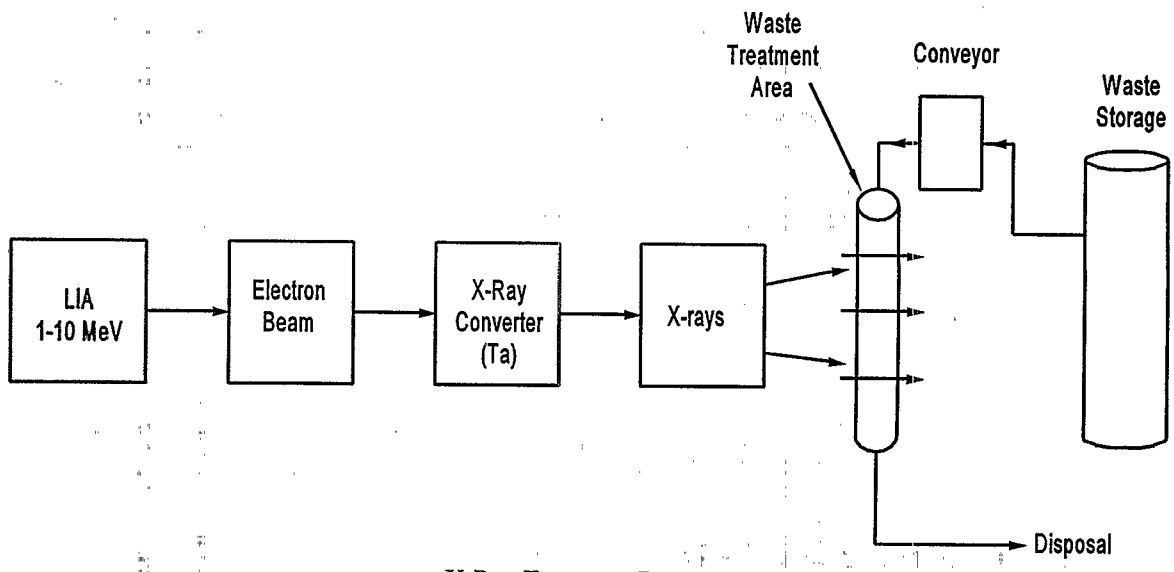

X-Ray Treatment Process

The SITE Program assesses but does not approve or endorse technologies.

X-rays can treat contaminated soil on a conveyor or contained in disposal barrels. Because X-rays penetrate about 20 centimeters into soil, large soil volumes can be treated without losing a significant fraction of the ionizing radiation in standard container walls. Pulse Sciences, Inc., estimates that the cost of high throughput X-ray processing is competitive with alternative processes that decompose the contaminants.

WASTE APPLICABILITY:

X-ray treatment of organically contaminated soils has the potential to treat large numbers of contaminants with minimum waste handling or preparation. Also, X-ray treatment can be applied in situ. In situ treatment may be of significant importance in cases where it is impossible or impractical to reconfigure the waste volume for the ionizing radiation range of electrons or ultraviolet radiation. Treatable organic contaminants include benzene, toluene, xylene, trichloroethene, tetrachloroethene, carbon tetrachloride, chloroform, and polychlorinated biphenyls.

STATUS:

This technology was accepted into the SITE Emerging Technology Program in 1993. A 1.2-MeV, 800-ampere (amp), 50-watt LIA and a 10.8-MeV, 0.2-amp, 10,000-watt radio frequency (RF) linac will be used in the program. The primary objectives are to (1) demonstrate that X-ray treatment can reduce VOC and SVOC levels in soils to acceptable levels, and (2) determine any hazardous by-product that may be produced.

Samples with identical initial contaminant concentration levels will be irradiated at increasing dose levels to determine (1) the rate (concentration versus dose) at which the contaminants are being destroyed, and (2) the X-ray dose required to reduce organic contamination to acceptable levels. The 10.8-MeV RF linac, which produces more penetrating X-rays, should provide information on the optimum X-ray energy for the treatment process. Increasing the accelerator energy allows a more efficient conversion from electrons to X-rays in the converter, but an upper limit (about 10 MeV) restricts the energy treatment, because higher energy activates the soil. The experimental database will be used to develop a conceptual design and cost estimate for a high throughput X-ray treatment system.

FOR FURTHER INFORMATION:

EPA PROJECT MANAGER:
George Moore
U.S. EPA
National Risk Management Research Laboratory
26 West Martin Luther King Drive
Cincinnati, OH 45268
513-569-7991
Fax: 513-569-7276

TECHNOLOGY DEVELOPER CONTACT:
Vernon Bailey
Pulse Sciences, Inc.
600 McCormick Street
San Leandro, CA 94577
510-632-5100
Fax: 510-632-5300

The SITE Program assesses but does not approve or endorse technologies.

THERMO NUTECH, INC.
(formerly TMA THERMO ANALYTICAL, INC.)
(Segmented Gate System)

TECHNOLOGY DESCRIPTION:

Thermo NUtech, Inc. (Thermo), has conducted many radiological surveys of soil contaminated with low and intermediate levels of radioactivity. Cleanup of these sites is a highly labor-intensive process requiring numerous personnel to conduct radiological surveys with portable hand-held instruments. When small areas of contamination are encountered, they are typically removed manually. When surveys disclose larger areas of contamination, heavy equipment is used to remove the contaminated material. Because pinpoint excision with earthmoving equipment is difficult, large amounts of uncontaminated soil are removed with the contaminant. Few sites have been characterized to be uniformly and/or homogeneously contaminated above release criteria over the entire site area.

As a result, Thermo developed the Segmented Gate System (SGS) to physically separate and segregate radioactive material from otherwise "clean" soil (see figure below). The SGS removes only a minimal amount of clean soil when radioactive particles are removed, significantly reducing the overall amount of material requiring disposal. The SGS works by conveying radiologically contaminated feed material on moving conveyor belts under an array of sensitive, rapidly reacting radiation detectors. The moving material is assayed, and radioactivity content is logged. Copyrighted computer software tracks the radioactive material as it is transported by the conveyor. The software then triggers a diversion by one or more of the SGS chutes when the material reaches the end of the conveyor. Clean soil goes in one direction, and contaminated material in another.

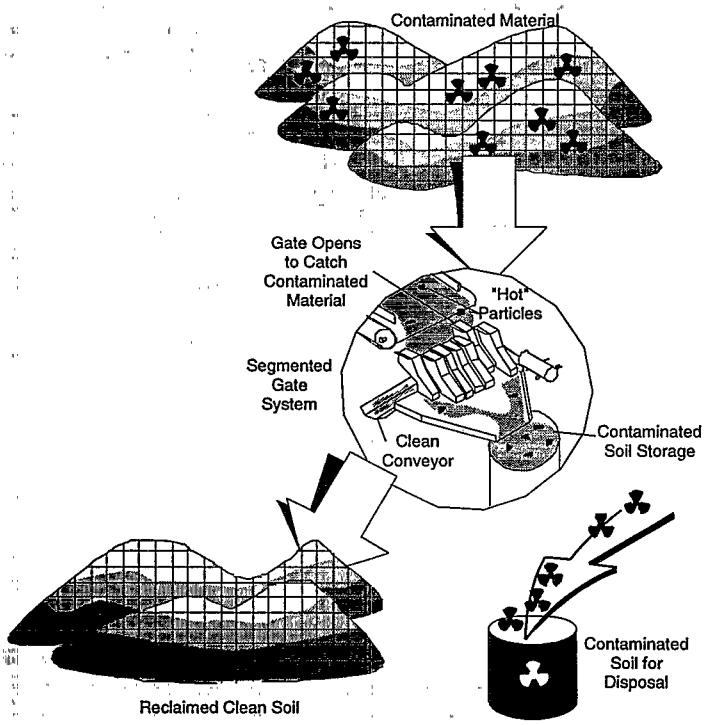

TMA's Segmented Gate System

The SITE Program assesses but does not approve or endorse technologies.

The key advantage to this system is automation, which affords a much higher degree of accuracy compared to manual methods. Contaminants can be isolated and removed by locating small particles of radioactive material dispersed throughout the soil. All of the soil is analyzed continuously during processing to document the level of radioactivity in the waste and to demonstrate that cleaned soil meets release criteria. This automation and analysis results in a significant cost reduction for special handling, packaging, and disposal of the site's radioactive waste.

WASTE APPLICABILITY:

The SGS locates, analyzes, and removes gamma ray-emitting radionuclides from soil, sand, dry sludge, or any host matrix that can be transported by conveyor belts. The SGS can identify hot particles, which are assayed in units of picoCuries, and can quantify distributed radioactivity, which is assayed in units of picoCuries per gram (pCi/g) of host material. The lower limit of detection (LLD) for the system depends on the ambient radiation background, conveyor belt speed, thickness of host material on conveyor, and contaminant gamma ray energy and abundance. However, LLDs for americium-241 of 2 pCi/g and for radium-226 of 5 pCi/g have been successfully demonstrated.

STATUS:

This technology was accepted into the SITE Emerging Technology Program in July 1994. Pilot- and field-scale tests using Thermo-owned mobile equipment began at a U.S. Department of Energy facility in March 1995.

A field test at a DOE site in Ashtabula, Ohio was scheduled for October 1998. Soil containing throrium-232, radium-226, and uranium-238 will be processed.

A similar system has been used on Johnston Atoll in the mid-Pacific since January 1992; Thermo is currently under contract to the U.S Defense Nuclear Agency to process coral soil contaminated with plutonium and americium using the SGS.

FOR FURTHER INFORMATION:

EPA PROJECT MANAGER:
Vince Gallardo
U.S. EPA
National Risk Management Research Laboratory
26 West Martin Luther King Drive
Cincinnati, OH 45268
513-569-7176
Fax: 513-569-7620

TECHNOLOGY DEVELOPER CONTACT:
Jeffrey Brown
Thermo NUtech, Inc.
601 Scarboro Road
Oak Ridge, TN 37830
423-481-0683
Fax: 423-483-4621

The SITE Program assesses but does not approve or endorse technologies.

UNIVERSITY OF HOUSTON
(Concentrated Chloride Extraction and Recovery of Lead)

TECHNOLOGY DESCRIPTION:

This technology recovers lead from soils using an aqueous solvent extraction process that takes advantage of the high solubility of chlorocomplexes of lead. The extract solution contains greater than 4 molar sodium chloride and operates at a pH of 4. The figure below depicts a bench-scale model of the three-stage continuous countercurrent pilot plant used to study the process.

To operate the pilot plant, soil is sieved to remove particles greater than 1.12 millimeters in diameter. The soil is then placed in the first chloride extraction tank (M1) for extraction with concentrated chloride solution. The resulting soil and solvent slurry passes into a thickener (S1). The soil and solvent slurry has an average residence time of 1 hour in each extraction tank in the system.

The bottoms of the thickener flow by gravity to the second chloride extraction tank (M2). The solution exiting the second chloride extraction tank flows to the second thickener (S2). The bottoms of the second thickener feed the third stage.

The third stage is the last soil stage and the first solvent stage; fresh solvent enters the system at stage three. The bottoms of the third thickener

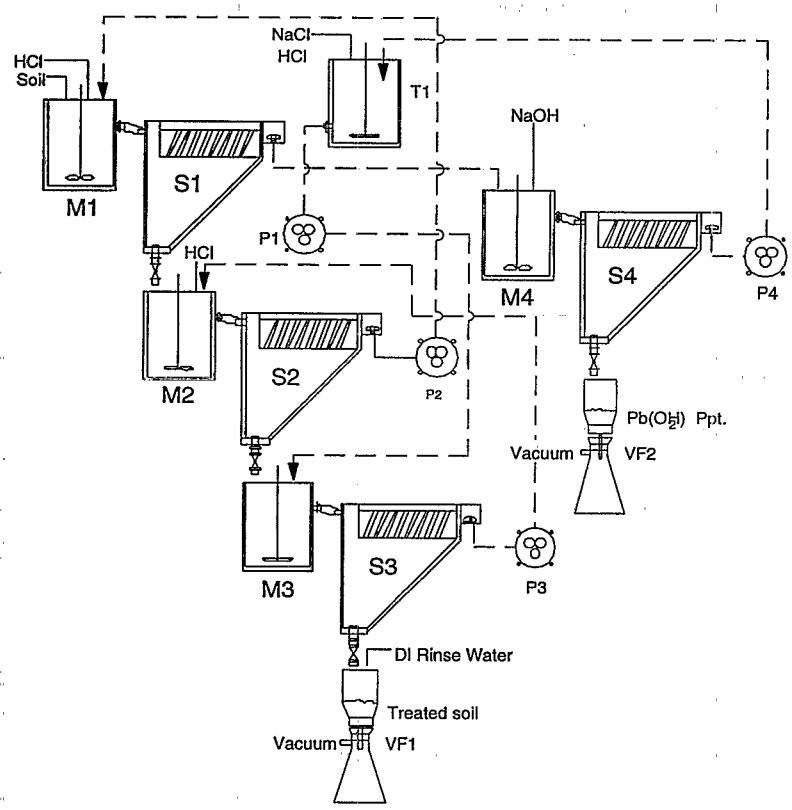

Concentrated Chloride Extraction and Recovery of Lead (Bench-Scale Process)

The SITE Program assesses but does not approve or endorse technologies.

(S3) flow by gravity into the soil rinse system (VF1) to remove excess salt. Soil rinsed in VF1 is clean product soil. The overflows from S3 pass to M2, the overflows from S2 pass to the M1, and the overflows from S1 pass to the lead precipitation system (M4/S4). In M4/S4, lead hydroxide [$(Pb(OH)_2$] is recovered by simply raising the pH of the spent extraction solution to 10. After $Pb(OH)_2$ removal, the spent chloride solution flows to the solvent makeup unit (T1) where it is acidified to pH 4 in preparation for reuse.

This technology produces (1) treated soil, suitable for replacement on site, and (2) $Pb(OH)_2$ that may be suitable for reprocessing to recover pure lead. The ease of solvent regeneration minimizes waste disposal. Solvent recycling is very successful, and pilot-plant tests have required little or no salt or water makeup.

The pilot plant has treated soil from two lead battery waste sites (LBWS). One LBWS soil contained a high percentage of fines (about 50 percent clay and silt), and the other contained a low percentage of fines (less than 20 percent clay and silt). The pilot plant's method of transferring soil by gravity eases much of the soil handling problems typical of high clay soils. After treatment, both soils easily passed the Toxicity Characteristic Leaching Procedure test. The total lead concentration in the high fines and low fines soil was reduced from 7 percent to about 0.15 percent and from 1.5 percent to 0.07 percent, respectively.

WASTE APPLICABILITY:

This technology removes high concentrations of lead from soil, particularly at LBWS, while producing a treated soil that can be used as backfill and a recyclable, concentrated lead salt.

STATUS:

This technology was accepted into the SITE Emerging Technology Program in September 1994. Batch extraction testing was completed in 1995. Treatability tests using the pilot plant to process high and low fines soils were completed in August 1996. The high fines soil came from a LBWS located in Houston, Texas, and the low fines soil came from the Sapp Battery National Priority List site in Florida. Future plans include expanding the applications of the technology by studying its effect on other wastes in soils. The technology evaluation is expected to be completed by August 1998.

FOR FURTHER INFORMATION:

EPA PROJECT MANAGER:
Terry Lyons
U.S. EPA
National Risk Management Research Laboratory
26 West Martin Luther King Drive
Cincinnati, OH 45268
513-569-7589

TECHNOLOGY DEVELOPER CONTACTS:
Dennis Clifford
Department of Civil and Environmental Engineering
University of Houston
4800 Calhoun Street
Houston, TX 77204-4791
713-743-4266
Fax: 713-743-4260
E-mail: DAClifford@uh.edu

The SITE Program assesses but does not approve or endorse technologies.

UNIVERSITY OF WISCONSIN-MADISON

(Photoelectrocatalytic Degradation and Removal)

TECHNOLOGY DESCRIPTION:

The University of Wisconsin-Madison (UW-Madison) is developing a photocatalytic technology that uses titanium dioxide (TiO_2) suspensions to coat various supporting materials used in treatment applications. For this application, the suspensions are used to coat a conductive metallic or carbon mesh. Coating the mesh with a suitable thickness of TiO_2 catalyst provides the basis for a photoreactor that uses most of the available ultraviolet (UV) radiation. An electrical field can also be applied across the catalyst to improve its performance.

The figure below shows a possible photoreactor design that uses a ceramic film. In this design, the TiO_2 coating on the porous metal acts as a photoanode. An electric potential can then be placed across the coating to direct the flow of electrons to a porous carbon counter-electrode that has a high surface area and is capable of collecting collect any heavy metal ions present in the liquid. In addition, an applied electric potential can improve the destruction efficiency of organic contaminants by reducing electron-hole recombination on the catalyst surface. This recombination is seen as a primary reason for the observed inefficiency of other UV/TiO_2 systems used to treat organics in groundwater. Lastly, the electric potential has been shown to reduce the interference of electrolytes on the oxidation process. Electrolytes such as the bicarbonate ion are known hydroxyl radical scavengers and can be problematic in the UV/TiO_2 treatment of contaminated groundwater.

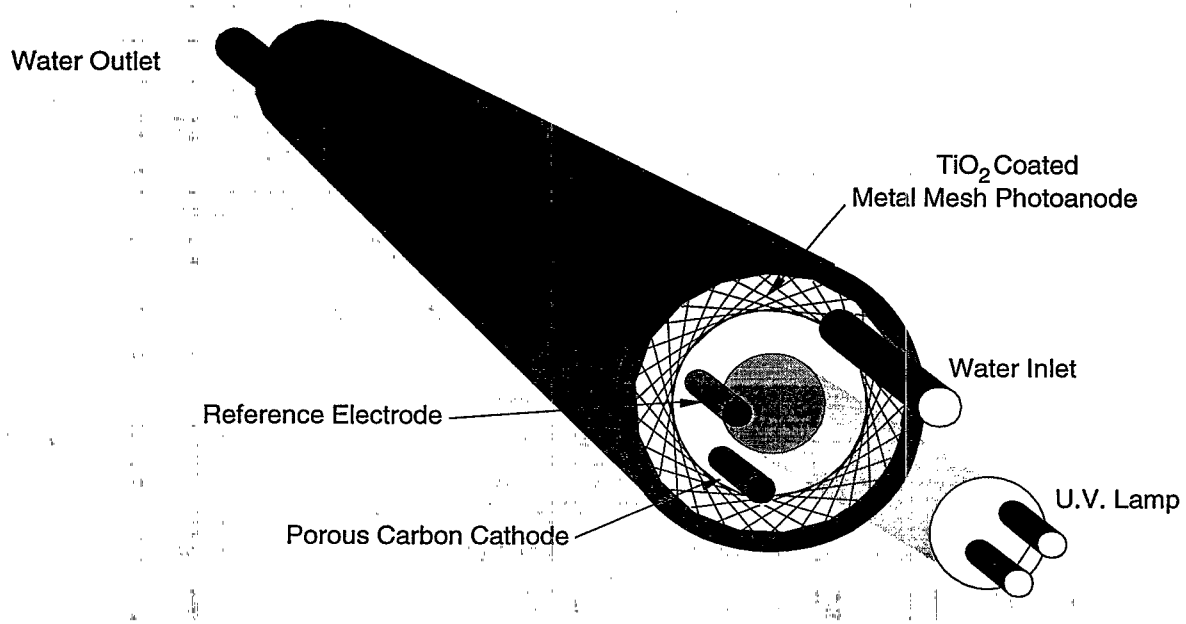

Photoreactor Design using Ceramic Film

The SITE Program assesses but does not approve or endorse technologies.

This technology represents and improvement on liquid-phase photocatalytic technologies by distributing radiation uniformly throughout the reactor. Also, the technology does not require additional oxidants, such as peroxide or ozone, to cause complete mineralization or to improve reaction rates. It also eliminates the need for an additional unit to separate and recover the catalyst from the purified water after the reaction is complete.

WASTE APPLICABILITY:

This particular technology is designed to treat groundwater and dilute aqueous waste streams contaminated with organics and heavy metals. Organics are completely oxidized to carbon dioxide, water, and halide ions. Heavy metals are subsequently stripped from the cathode and recovered.

STATUS:

The UW-Madison photocatalytic technology was accepted into the SITE Emerging Technology Program in 1995. The overall objective of the Emerging Technology Program study is to refine the reactor design, enabling it to treat heavy metals as well as organic contaminants. Testing of a bench-scale unit is currently underway.

UW-Madison has tested its photocatalytic reactor at the laboratory scale on aqueous solutions of several organic contaminants, including polychlorinated biphenyls, chlorosalicylic acid, salicylic acid, and ethylenediamine tetraacetate. UW-Madison has also used similar reactors to remove volatile organic compounds, such as trichloroethene, tetrachloroethene, benzene, and ethylene from air streams. Photooxidation of trichloroethene and tetrachloroethene has been successfully field-tested at low flow rates (less than 0.1 standard cubic feet per minute).

FOR FURTHER INFORMATION:

EPA PROJECT MANAGER:
Vince Gallardo
U.S. EPA
National Risk Management Research Laboratory
26 West Martin Luther King Drive
Cincinnati, OH 45268
513-569-7176
Fax: 513-569-7620

TECHNOLOGY DEVELOPER CONTACTS:
Marc Anderson
Water Chemistry Program
University of Wisconsin-Madison
660 North Park Street
Madison, WI 53706
608-262-2674
Fax: 608-262-0454

Charles Hill, Jr.
Department of Chemical Engineering
University of Wisconsin-Madison
Engineering Hall
1415 Engineering Drive, Room 1004
Madison, WI 53706
608-263-4593
Fax: 608-262-5434

The SITE Program assesses but does not approve or endorse technologies.

Documents Available from the
US EPA National Risk Management Research Laboratory
Superfund Technology Demonstration Division
General Publications

•SITE Program: Annual Report to Congress 1994 (EPA/540/R-95/522)
•SITE Profiles, Seventh Edition (EPA/540/r-94/526)
•Survey of Materials Handling Technologies Used at Hazardous Waste Sites (EPA/540/2-91/010)
•Interim Status Report U.S. and German bilateral Agreement on Remediation of Hazardous Waste Sites (EPA/540/R-94/500)

Demonstration Project Results

Accutech Remedial Systems, Inc.--Pneumatic Fracturing Extraction and Hot Gas Injection, Phase 1
•Technology Evaluation (EPA/540/R-93/509) PB93-216596
•Technology Demo. Summary (EPA/540/SR-93/509)[3]
•Demonstration Bulletin (EPA/540/MR-93/509)[3]
•Applications Analysis (EPA/540/AR-93/509)[3] PB94-117439

Advanced Remediation Mixing, Inc. (formerly Chemfix)-Chemical Fixation/Stabilization
•Technology Evaluation Vol. 1 (EPA/540/5-89/011a)[3] PB91-127696
•Technology Evauation Vol.11 (EPA/540/5-89/011b)[3] PB90-274127
•Applications Analysis (EPA/540/A5-89/011)
•Technology Demo. Summary (EPA/540/S5-89/011)[3]
•Demonstration Bulletin (EPA/540/M5-89/011)[3]

American Combustion, Inc.-Oxygen Enhanced Incineration
•Technology Evaluation (EPA/540/5-89/008)
•Applications Analysis (EPA/540/A5-89/008)
•Technology Demo. Summary (EPA/540/S5-89/008)[3]
•Demonstration Bulletin (EPA/540/M5-89/008)[3]

AWD Technologies, Inc.- Integrated Vapor Extraction and Steam Vacuum Stripping
•Applications Analysis (EPA/540/A5-91/002) PB92-218379
•Demonstration Bulletin (EPA/540/M5-91/002)[3]

Babcock & Wilcox Co-Cyclone Furnace Vitrification
•Technology Evaluation Vol. 1 (EPA/540/R-92/017A)[3] PB92-222215
•Technology Evaluation Vol. 11 (EPA/540/R-92/017B)[3] PB92-222223
•Applications Analysis (EPA/540/AR-92/017) PB93-122315
•Technology Demo. Summary (EPA/540/SR-92/017)[3]
•Demonstration Bulletin (EPA/540/MR-92/011)

Bergman USA-Soil and Sediment Washing System
•Demonstration Bulletin (EPA/540/MR-92/075)
•Applications Analysis (EPA/540/AR-92/075)

Biogenesis Enterprises, Inc.-Soil and Sediment Washing Processes
•Demonstration Bulletin (EPA/540/MR-93/510)
•Innovative Technology Evaluation Report (EPA/540/R-93/510)
•SITE Technology Capsule (EPA/540/SR-93/510)[3]

Bio-Rem, Inc. - Augmented In-Situ Subsurface Biorem Process
•Demonstration Bulletin (EPA/540/MR-93/527)

BioTrol - Biological Aqueous Treatment System
•Technology Evaluation (EPA/540/5-91/001)[3] PB92-110048
•Applications Analysis (EPA/540/A5-91/001) PB91-227983
•Technology Demo. Summary (EPA/540/S5-91/001)
•Demonstration Bulletin (EPA/540/M5-91/001)

[1] Order documents free of charge by calling EPA's Center for Environmental Research Information (CERI) at 513-569-7562 or Fax 513-569-8695.
[2] Documents with a PB number are out of stock and must be ordered by that number at cost from:
National Technical Information Service
5285 Port Royal Road
Springfield VA 22161
Telephone 703-487-4650
[3] Out of stock

Demonstration Project Results (Continued)

BioTrol - Soil Washing System
- Technology Evaluation Vol. 1 (EPA/540/5-91/003a)[3] PB92-115310
- Technology Evaluation Vol. 11 Part A (EPA/540/5-91/003b)[3] PB92-115328
- Technology Evaluation Vol. 11 Part B (EPA/540/5-91/003c)[3] PB92-115336
- Applications Analysis (EPA/540/A5-91/003)
- Technology Demo. Summary (EPA/540/S5-91/003)
- Demonstration Bulletin (EPA/540/M5-91/003)

Brice Environmental Services Corporation-Bescorp Soil Washing System Battery Enterprises Site
- Demonstration Bulletin (EPA/540/MR-93/503)
- Applications Analysis (EPA/540/A5-93/503)

Brown and Root Environmental-Subsurface Volaitilization and Ventilation System
- Demonstration Bulletin (EPA/540/MR-94/529)
- Capsule (EPA/540/R-94/529a)
- Innovative Tech. Eval. Report (EPA/540/R-94/529)

Canonie Environmental Services Corporation-Low Temperature Thermal Aeration (LTTA)
- Demonstration Bulletin (EPA/540/MR-93/504)
- Applications Analysis (EPA/540/AR-93/504)

CeTech Resources, Inc., formerly Chemfix Technologies, Inc. - Chemical Fixation/Stabilization
- Technology Evaluation Vol. 1 (EPA/540/5-89/011a) PB91-127696
- Technology Evaluation Vol. 11 (EPA/540/5-89/011b) PB90-274127
- Applications Analysis (EPA/540/A5-89/011)
- Technology Demo. Summary (EPA/540/S5-89/011)[3] PB91-921373
- Demonstration Bulletin (EPA/540/M5-89/011)[3]

CF Systems Corporation-Liquified Gas Solvent Extraction
- Technology Evaluation Vol. 1 (EPA/540/5-90/002)
- Technology Evaluation Vol. 11 (EPA/540/5-90/002a)[3] PB90-186503
- Applications Analysis (EPA/540/A5-90/002)
- Technology Demo. Summary (EPA/540/S5-90/002)

Chemfix Technologies, Inc. (Now Advanced Remediation Mixing, Inc.) - Chemical Fixation/Stabilization
- Technology Evaluation Vol. 1 (EPA/540/5- 89/011a) PB91-127696[2]
- Technology Evauation Vol.11 (EPA/540/5-89/011b) PB90-274127[2]
- Applications Analysis (EPA/540/A5-89/011)
- Technology Demo. Summary (EPA/540/S5-89/011) PB91-921373[2]
- Demonstration Bulletin (EPA/540/M5-89/011)[3]

Chemical Waste Management, Inc.-X-TRAX Thermal Desorption System
- Demonstration Bulletin (EPA/540/MR-93/502)

Clean Berkshires, Inc. (Now Maxymillian Technologies)-Thermal Desorption System
- Demonstration Bulletin (EPA/540/MR-94/507)
- Capsule (EPA/540/R-94/507a)[3]

Cognis, Inc. Removal of Lead from Soils
- Demonstration Bulletin (EPA/540/MR-95/535)

Dehydro-Tech Corporation-Carver-Greenfield Process
- Technology Evaluation (EPA/540/R-92/002)[3] PB92-217462
- Applications Analysis (EPA/540/AR-92/002)
- Technology Demo. Summary (EPA/540/SR-92/002)
- Demonstration Bulletin (EPA/540/MR-92/002)

Dupont/Oberlin-Membrane Microfiltration System
- Technology Evaluation (EPA/540/5-90/007)[3] PB92-153410
- Applications Analysis (EPA/540/A5-90/007)
- Technology Demo. Summary (EPA/540/S5-90/007)
- Demonstration Bulletin (EPA/540/M5-90/007)

Dynaphore, Inc.- Forager Sponge Technology
- Demonstration Bulletin (EPA/540/MR-94/522)
- Capsule (EPA/540/R-94/522a)
- Innovative Tech. Eval. Rept. (EPA/540/R-94/522)

ECOVA Corporation - Bioslurry Reactor [Pilot-Scale Demonstration of Slurry-Phase Biological Reactor for Creosote-Contaminated Wastewater]
- Technology Evaluation Vol. 1 (EPA/540/5-91/009)[3] PB93-205532
- Applications Analysis (EPA/540/A5-91/009)
- Technology Demo. Summary (EPA/540/S5-91/009)
- Demonstration Bulletin (EPA/540/M5-91/009)

---

[1] Order documents free of charge by calling EPA's Center for Environmental Research Information (CERI) at 513-569-7562 or Fax 513-569-8695.

[2] Documents with a PB number are out of stock and must be ordered by that number at cost from:
National Technical Information Service
5285 Port Royal Road
Springfield VA 22161
Telephone 703-487-4650

[3] Out of stock

Demonstration Project Results (Continued)

ELI Eco Logic International, Inc.
- GasPhase Chemical Reduction
- Demonstration Bulletin (EPA/540/MR-93/522)
- Technology Evaluation Vol. 1 (EPA/540/R-93/522a) PB95-100251
- Technology Evaluation Appendices (EPA/540/R-93/522b)[3] PB95-100251
- Applications Analysis (EPA/540/AR-93/522)
- Technology Demo. Summary (EPA/540/SR-93/522)

- Thermal Desorption Unit
- Demonstration Bulletin (EPA/540/MR94/504)
- Applications Analysis (EPA/540/AR-94/504

EnviroMetal Technologies, Inc.-Metal-Enhanced Abiotic Degradation Technology
- Demonstration Bulletin (EPA/540/MR95/510)

EPOC Water, Inc. - Microfiltration Technology
- Demonstration Bulletin (EPA/540/MR93/513)
- Applications Analysis (EPA/540/AR-93/513)

Filter Flow Technology, Inc. - Colloid Polishing Filter Method
- Demonstration Bulletin (EPA/540/MR95/501)
- Capsule (EPA/540/R-94/501a) PB95-122792
- Innovative Tech. Eval. Rept. (EPA/540/R-94/501) B95-122792

Geo-Con, Inc.-In-Situ Solidification and Stabilization Process
- Technology Evaluation Vol. 1 (EPA/540/5-89/004a)
- Technology Evaluation Appendices (EPA/540/R-93/522b)[3] PB95-100251
- Technology Evaluation Vol. 11 (EPA/540/5-89)004b)[3] PB89-194179
- Technology Evaluation Vol. 111 (EPA/540/5-89/004c)[3] PB90-269069
- Technology Evaluation Vol. 1V (EPA/540/5-89/004d)[3] PB90-269077
- Applications Analysis (EPA/540/A5-89/004)
- Technology Demo. Summary (EPA/540/S5-89/004)
- Technology Demo. Summary, Update Report (EPA/540/S5-89/004a)
- Demonstration Bulletin (EPA/540/M5-89/004)[3]

Geosafe Corporation - In-Situ Vitrification
- Demonstration Bulletin (EPA/540/MR94/520)
- Capsule (EPA/540/R-94/520a)[3] PB95-177101
- Innovative Tech. Eval. Rept. (EPA/540/R-94/520)

GeoTech Development Corporation - Cold Top Vitrification
- Demonstration Bulletin (EPA/540/MR-97/506)

GIS/Solutions, Inc. - GIS/KEY Environmental Data Management System
- Demonstration Bulletin (EPA/540/MR94/505)
- Capsule (EPA/540/SR-94/505)
- Innovative Tech. Eval. Rept. (EPA/540/R-94/505) PB95-138319

Grace Dearborn Bioremediation Technology
- Demonstration Bulletin (EPA/540/MR-95/536)
- Capsule (EPA/540/R-95/536a)
- Innovative Tech. Eval. Rept. (EPA/540/R-95/536)

Gruppa Italimpresse (developed by Shirco Infrared Systems, Inc.) - Infrared Incineration
- Technology Evaluation -Peake Oil (EPA/540/5-88/002a)
- Technology Evaluation Report - Peake Oil Vol. 11 (EPA/540/5-88/002b) PB89-116024
- Technology Evaluation - Rose Township (EPA/540/5-89/007a) PB89-125991
- Technology Evaluation- Rose Township Vol. 11 (EPA/540/5-89)007b) PB89-167910
- Applications Analysis (EPA/540/A5-89/010) PB89-233423
- Technology Demo Summary (EPA/540/S5-89/007)[3]
- Demonstration Bulletin (EPA/540/M5-88/002)[3]

Hazcon, Inc. (now Funderburk and Assoc.) - Solidification Process
- Technology Evaluation Vol. 1 (EPA/540/5-89/001a) PB89-158810[3]
- Technology Evaluation Vol. 11 (EPA/540/5-89)001b) PB89-158828[3]
- Applications Analysis (EPA/540/A5-89/001)
- Technology Demo Summary (EPA/540/S5-89/001)[3]
- Demonstration Bulletin (EPA/540/M5-89/001)[3]

High Voltage Environmental Applications, Inc.
- Demonstration Bulletin (EPA/540/MR-96/504)
- Innovative Tech. Eval. Rept. (EPA/540/R-96/504)

Horsehead Resource Development Co., Inc. - Flame Reactor
- Technology Evaluation Vol. 1 (EPA/540/5-91/005) PB92-205855
- Applications Analysis (EPA/540/A5-91/005)
- Technology Demo Summary (EPA/540/S5-91/005)
- Demonstration Bulletin (EPA/540/M5-91/005)

---

[1] Order documents free of charge by calling EPA's Center for Environmental Research Information (CERI) at 513-569-7562 or Fax 513-569-8695.

[2] Documents with a PB number are out of stock and must be ordered by that number at cost from:

National Technical Information Service
5285 Port Royal Road
Springfield VA 22161
Telephone 703-487-4650

[3] Out of stock

Demonstration Project Results (Continued)

Hrubetz Environmental Services, Inc. - HRUBOUT Process
- Demonstration Bulletin (EPA/540/MR-93/524)

Huges Environmental Systems, Inc. - Steam Enhanced Recovery Process
- Demonstration Bulletin (EPA/540/MR94/510)
- Capsule (EPA/540R-94/510a)
- Innovative Tech. Eval. Rept. (EPA/540/R-94/510)

IT Research Institute (Brown and Root Environmental, Inc.) - Radio Frequency Heating
- Demonstration Bulletin (EPA/540/MR94/527)
- Capsule (EPA/540/R-94/527a)
- Innovative Tech. Eval. Rept. (EPA/540/R-94/527)

International Waste Technologies/Geo-Con, Inc . - In-Situ Solidification and Stabilization Process
- Technology Evaluation Vol. 1 (EPA/540/5-89/004a) PB90-194161[2]
- Technology Evaluation Appendices (EPA/540/R-93/522b) PB95-100251[2]
- Technology Evaluation Vol. 11 (EPA/540/5-89/004b) PB89-194179[2]
- Technology Evaluation Vol. 111 (EPA/540/5-89/004c) PB90-269069[2]
- Technology Evaluation Vol. 1V (EPA/540/5-89/004d) PB90-269077[2]
- Applications Analysis (EPA/540/A5-89/004) PB90-269085[2]
- Technology Demo. Summary (EPA/540/S5-89/004)[3]
- Technology Demo. Summary, Update Report (EPA/540/S5-89/004a)[3]
- Demonstration Bulletin (EPA/540/M5-89/004)[3]

KAI Technologies Inc./Brown and Root Environmental Radio Frequency Heating
- Demonstration Bulletin (EPA/540/MR-94/528)
- Capsule (EPA/540/R-94/528a)
- Innovative Tech. Eval. Report (EPA/540/R-94/528)1

Magnum Water Technology - CAV-OX Ultraviolet Oxidation Process
- Demonstration Bulletin (EPA/540/MR-93/520)
- Applications Analysis (EPA/540/AR-93/520) PB94-189438
- Technology Evaluation Rep. (EPA/540/R-93/520)[3] PB95-166161
- Technology Demo Summary (EPA/540/SR-93/520)

Matrix Photocatalytic Ltd. - Photocatalytic Aqueous Phase Organics Destruction Process
- Innovative Tech. Eval. Report (EPA/540/R-97/503)

Maxymillian Technologies (formerly Clean Berkshires, Inc.) - Thermal Desorption System
- Demonstration Bulletin (EPA/540/MR-94/507)
- Capsule (EPA/540/R-94/507a) PB95-122800[2]

New Jersey Institute of Technology - Cold Top Vitrification Process
- Demonstration Bulletin (EPA/540/MR-97/506)

New York State Multi-Vendor Bioremediation:
- ENSR Consulting & Engineering/Larson Engineers - Ex-Situ Biovault
- Demonstration Bulletin (EPA/540/MR-95/524)

- R.E. Wright Environmental Inc. - In-Situ Bioremediation System
- Demonstration Bulletin (EPA/540/MR-95/525)

-SBP Technologies, Inc. And Env. Laboratories, Inc. - Vacuum-Vaporized Well (UVB) System
- Demonstration Bulletin (EPA/540/MR-96/506)

North American Technologies Group, Inc. - SFC Oleofiltration System
- Demonstration Bulletin (EPA/540/MR-94/525)
- Capsule (EPA/540/R-94/525a)[3] PB95-167227
- Innovative Tech. Eval. Rept. (EPA/540/R-94/525)

Ogden Environmental Services, Inc. (now General Atomics) - Ogden Circulating Bed Combustor
- Demonstration Bulletin (EPA/540/MR-92/001)
- Technology Evaluation Rep. (EPA/540/MR-92/001)

---

[1] Order documents free of charge by calling EPA's Center for Environmental Research Information (CERI) at 513-569-7562 or Fax 513-569-8695.
[2] Documents with a PB number are out of stock and must be ordered by that number at cost from:
National Technical Information Service
5285 Port Royal Road
Springfield VA 22161
Telephone 703-487-4650
[3] Out of stock

Demonstration Project Results (Continued)

Peroxidation Systems, Inc. (now Vulcan) - Perox-Pure™ Chemical Oxidation
- Demonstration Bulletin (EPA/540/MR-93/501)
- Applications Analysis (EPA/540/AR-93/501)
- Technology Evaluation Rep. (EPA/540/R-93/501)[3] PB93-213528
- Technology Demo Summary (EPA/540/SR-93/501)

Resources Conservation Company - The Basic Extractive Sludge Treatment (B.E.S.T.) - Solvent Extraction
- Demonstration Bulletin (EPA/540/MR-92/079)
- Applications Analysis (EPA/540/AR-92/079)
- Technology Evaluation -Vol. 1 (EPA/540/R-92/079a) PB93-227122
- Technology Evaluation Vol. 11, Part 1 (EPA/540/R-92/079b)[3] PB93-227130
- Technology Evaluation Vol. 11, Part 2 (EPA/540/R-92/079c)[3] PB93-227148
- Technology Evaluation Vol. 11, Part 3 (EPA/540/R-92)079d)[3] PB93-227155
- Technology Demo Summary (EPA/540/SR-92/079)

Retech, Inc. - Plasma Centrifugal Furnace (Plasma Arc Vitrification)
- Demonstration Bulletin (EPA/540/M5-91/007)
- Technology Evaluation -Vol. 1 (EPA/540/5-91/007a)[3] PB92-216035
- Technology Evaluation Vol. 11 (EPA/540/5-91/007b)[3] PB92-216043
- Applications Analysis (EPA/540/A5-91/007) PB92-218791
- Technology Demo Summary (EPA/540/S5-91/007)

Risk Reduction Engineering Laboratory
- and IT Corporation - Debris Washing System
- Technology Evaluation -Vol. 1 (EPA/540/5-91/006a)
- Technology Evaluation Vol. 11 (EPA/540/5-91/006b)[3] PB91-231464
- Technology Demo Summary(EPA/540/S5-91/006)

- and University of Cincinnati-Hydraulic Fracturing of Contaminated Soil
- Demonstration Bulletin (EPA/540/MR-93/505)
- Technology Evaluation and Applications Analysis Combined (EPA/540/R-93/505)
- Technology Demo Summary (EPA/540/SR-93/505)

-and USDA-Forest Products Technology - Fungal Treatment Technology
- Demonstration Bulletin (EPA/540/MR-93/514)

-Mobile Volume Reduction Unit at the Sand Creek Superfund Site
- Treatability Study Bulletin (EPA/540/MR-93/512)

-Mobile Volume Reduction Unit at the Escambia Superfund Site
- Treatability Study Bulletin (EPA/540/MR-93/511)

-Volume Reduction Unit
- Demonstration Bulletin (EPA/540/MR-93/508)
- Applications Analysis (EPA/540/AR-93/508)
- Technology Evaluation (EPA/540/R-93/508)[3] PB94-136264
- Technology Demo Summary (EPA/540/SR-93/508)

Rochem Separations Systems, Inc. - Disc Tube Modle Technology
- Demonstration Bulletin (EPA/540/MR-96/507)
- Capsule (EPA/540/R-96/507a)
- Innovative Tech. Eval. Report (EPA/540/R-96/507)

Roy F. Weston, Inc.
-and IEG Technologies-Unterdruck-Verdampfer-Brunner Technology (UVB) Vacuum Vaporizing Well
- Demonstration Bulletin (EPA/540/MR-95/500)
- Capsule (EPA/540/R-95/500a)

-Low Temperature Thermal Treatment (LT3) System
- Demonstration Bulletin (EPA/540/MR-92/019)
- Applications Analysis (EPA/540/AR-92/019)

Sandia National Labs - In Situ Electrokinetic Extraction System
- Demonstration Bulletin (EPA/540/MR-97/509)

SBP Technologies, Inc.-Membrant Filtration and Bioremediation
- Demonstration Bulletin (EPA/540/MR-92/014)
- Applications Analysis (EPA/540/AR-92/014)

[1] Order documents free of charge by calling EPA's Center for Environmental Research Information (CERI) at 513-569-7562 or Fax 513-569-8695.
[2] Documents with a PB number are out of stock and must be ordered by that number at cost from:
National Technical Information Service
5285 Port Royal Road
Springfield VA 22161
Telephone 703-487-4650
[3] Out of stock

Demonstration Project Results (Continued)

SilicateTechnology Corporation-Solidification/Stabilization of Organic/Inorganic Contaminants
- Demonstration Bulletin (EPA/540/MR-92/010)
- Applications Analysis (EPA/540/AR-92/010)[3] PB93-172948
- Technology Evaluation (EPA/540/R-92/010)[3] PB95-255709
- Technology Demo Summary (EPA/540/SR-92/010)

Simplot, J.R. - Ex Situ Anaerobic Bioremediation Technology: TNT
- Demonstration Bulletin (EPA/540/MR-95/529)
- Capsule (EPA/540/MR-95/529a)
- Innovative Tech. Eval. Report (EPA/540/R-95/529)

Simplot, J.R. - Ex-Situ Anaerobic Bioremediation System (The SABRE Process)
- Demonstration Bulletin (EPA/540/MR-94/508)
- Capsule (EPA/540R-94/508a)
- Innovative Tech. Eval. Report (EPA/540/R-94/508)

Soiltech ATP Systems, Inc.
-Aostra-SoilTech Anaerobic Thermal Process
- Demonstration Bulletin (EPA/540/MR-92/008)

-SoilTech Anaerobic Thermal Processor
- Demonstration Bulletin (EPA/540/MR-92/078)

Soliditech, Inc. - Solidification and Stabilization
- Technology Evaluation -Vol. 1 (EPA/540/5-89/005a)[3] PB90-191750
- Technology Evaluation Vol. 11 EPA/540/5-89/005b)[3] PB90-191768
- Applications Analysis (EPA/540/A5-89/005)
- Technology Demo Summary (EPA/540/S5-89/005)[3]
- Demonstration Bulletin (EPA/540/M5-89/005)[3]

Solucorp - Molecular Bonding System
- Innovative Tech. Eval. Report (EPA/540/R-97/507)

Sonotech, Inc. - Cello Pulse Combustion Burner System
- Demonstration Bulletin (EPA/540/MR-95/502)
- Capsule (EPA/540/R-95/502a)

TerraKleen Response Group, Inc. - Solvent Extraction Treatment System
- Demonstration Bulletin (EPA/540/MR-94/521)[3]
- Capsule (EPA/540/R-94/521a)

Terra Vac, Inc. - In Situ Vacuum Extraction
- Demonstration Bulletin (EPA/540/M5-89/003)[3]
- Technology Evaluation -Vol. 1 (EPA/540/5-89/003a)[3] PB89-192025
- Technology Evaluation Vol. 11 (EPA/540/5-89/003b)[3] PB89-192033
- Applications Analysis (EPA/540/A5-89/003)
- Technology Demo Summary(EPA/540/S5-89/003)

Texaco, Inc. - Entrained-Bed Gasification Process
- Demonstration Bulletin (EPA/540/MR-94/514)
- Capsule (EPA/540/R-94/514a)
- Innovative Tech. Eval. Report (EPA/540/R-94/514)

Thorneco, Inc. - Enzyme - Activated Cellulose Technology
- Treataability Study Bulletin (EPA/540/MR-92/018)[3]

Toronto Harbour Commission - Soil Recycling Treatment Train
- Demonstration Bulletin (EPA/540/MR-92/015)
- Applications Analysis (EPA/540/AR-93/517)
- Technology Evaluation (EPA/540/R-93/517)[3] PB93-216067
- Technology Demo Summary (EPA/540/SR-93/517)

Toxic Treatments USA, Inc. (Now NOVATERRA, Inc.) - In-Situ Steam/Hot Air Stripping
- Demonstration Bulletin (EPA/540/M5-90/003)
- Applications Analysis (EPA/540/A5-90/008)

Ultrox, a Division of Zimpro Environmental, Inc. - UV Ozone Treatment for Liquids
- Demonstration Bulletin (EPA/540/M5-89/012)
- Applications Analysis (EPA/540/A5-89/012)
- Technology Evaluation (EPA/540/5-89/012)[3] PB90-198177
- Technology Demo Summary (EPA/540/S5-89/012)

U.S. EPA - McColl Superfund Site - Demonstration of a Trial Excavation
- Technology Evaluation (EPA/540/5-92/015)[3] PB92-226448
- Applications Analysis (EPA/540/AR-92/015)
- Technology Demo Summary (EPA/540/SR-92/015)

---

[1] Order documents free of charge by calling EPA's Center for Environmental Research Information (CERI) at 513-569-7562 or Fax 513-569-8695.

[2] Documents with a PB number are out of stock and must be ordered by that number at cost from:
National Technical Information Service
5285 Port Royal Road
Springfield VA 22161
Telephone 703-487-4650

[3] Out of stock

Demonstration Project Results (Continued)

Wheelabrator Clean Air Systems, Inc. (formerly Chemical Waste Management, Inc.) -PO*WW*ER™ Technology

- Demonstration Bulletin (EPA/540/MR-93/506)
- Applications Analysis (EPA/540/AR-93/506)
- Technology Evaluation -Vol. 1 (EPA/540/R-93/506a)[3] PB94-160637
- Technology Evaluation Vol. 11 (EPA/540/R-93506b)[3] PB94-160660
- Technology Demo Summary (EPA/540/SR-93/506)

Zenon Environmental, Inc. - Zenon Cross-Flow Pervaporation Technology

- Demonstration Bulletin (EPA/540/MR-95/511)
- Capsule (EPA/540/R-95/511a)

Zenon Environmental Systems - Zenogem Wastewater Treatment Process

- Demonstration Bulletin (EPA/540/MR-95/503)
- Capsule (EPA/540/R-95/503a)

[1] Order documents free of charge by calling EPA's Center for Environmental Research Information (CERI) at 513-569-7562 or Fax 513-569-8695.

[2] Documents with a PB number are out of stock and must be ordered by that number at cost from:

National Technical Information Service
5285 Port Royal Road
Springfield VA 22161
Telephone 703-487-4650

[3] Out of stock

Emerging Technologies Program Reports

General Publications

- Superfund Innovative Technology Evaluation Program: - Innovation Making a Difference Emerging Tech. Brochure (EPA/540/F-94/505)
- Superfund Innovative Technology Evaluation Program: - Technology with an Impact Emerging Tech. Brochure (EPA/540/F-93/500)
- SITE Emerging Technology Program (Brochure) (EPA/540/F-95/502)

ABB Environmental Services, Inc. - Two Zone PCE Bioremediation System

- Emerging Tech. Bulletin (EPA/540/F-95/510)

Aluminum Company of America (Now Media & Process Technology) - Bioscrubber for Removing Hazardous Organic Emission from Soil, Water, and Air Decontamination Process

- EmergingTech. Report (EPA/540/R- 93/521)[3] PB93-227025
- Emerging Tech. Bulletin (EPA/540/F-93/507)
- Emerging Tech. Summary (EPA/540/SR-93/521)
- Journal Article AWMA Vol. 44, No. 3, March 1994

Atomic Energy of Canada, Limited - Chemical Treatment and Ultrafiltration

- Emerging Tech. Bulletin (EPA/540/F-92/002)

Babcock & Wilcox Co. - Cyclone Furnace (Soil Vitrification)

- EmergingTech. Report (EPA/540/R- 93/507) PB93-163038
- Emerging Tech. Bulletin (EPA/540/F-92/010)
- Emerging Tech. Summary (EPA/540/SR-93/507)

Batelle Memorial Institute - In Situ Elecroacoustic Soil Decontamination

- Emerging Technology (EPA/540/5-90/004)[3] PB90-204728
- Emerging Tech. Summary (EPA/540/S5-90/004)[3]

Bio-Recovery Systems, Inc. - Removal and Recovery of Metal Ions from Groundwater (AlgaSORB)

- Emerging Technology (EPA/540/5-90/005a)
- Emerging Tech. - Appendices (EPA/540/5-90/005b)[3] PB90-252602
- Emerging Tech. Summary (EPA/540/S5-90/005)
- Emerging Tech. Bulletin (EPA/540/F-92/003)

Biotrol, Inc. - Mehanotrophic Bioreactor System

- Emerging Tech. Bulletin (EPA/540/F-93/506)
- Emerging Tech. Summary (EPA/540/SR-93/505)
- Journal Article AWMA Vol. 45, No.1, Jan. 1995

Center for Hazardous Materials Research - Acid Extraction Treatment System for Treatment of Metal Contaminated Soils

- Emerging Tech. Report (EPA/540/R-94/513)[3] PB94-188109
- Emerging Tech. Summary (EPA/540/SR-94/513)

- Reclamation of Lead from Superfund Waste Material Using Secondary Lead Smelters

- Emerging Tech. Bulletin (EPA/540/F-94/510)
- Emerging Tech. Summary (EPA/540/SR-95/504)
- Emerging Tech. Report (EPA/540/R-95/504)[3] PB9-199022

-Simulatanious Destruction of Organics and Stabilization of Metals in Soils

- Emerging Tech. Summary (EPA/540/SR-98/500)
- Emerging Tech. Report (EPA/540/R-98/500) PB98-133150

Colorado School of Mines - Constructed Wetlands-Based Treatment

- Emerging Tech. Bulletin (EPA/540/F-92/001)
- Emerging Tech. Summary (EPA/540/SR-93/523)
- Emerging Tech. Report (EPA/540/R-93/523)[3] PB93-233914

University of Dayton Research Institute - Development of a Photothermal Detoxification Unit

- Emerging Tech. Bulletin (EPA/540/F-95/505)
- Emerging Tech. Summary (EPA/540/SR-95/526)
- Emerging Tech. Report (EPA/540/R-95/526)[3] PB95-255733

Electro-Pure Systems, Inc. - Alternating Current Electrocoagulation Technology

- Emerging Tech. Bulletin (EPA/540/F-92/011)
- Emerging Tech. Summary (EPA/540/S-93/504)
- Journal Article AWMA V43, No. 43, May 1993

[1] Order documents free of charge by calling EPA's Center for Environmental Research Information (CERI) at 513-569-7562 or Fax 513-569-8695.
[2] Documents with a PB number are out of stock and must be ordered by that number at cost from:

National Technical Information Service
5285 Port Royal Road
Springfield VA 22161
Telephone 703-487-4650
[3] Out of stock

Emerging Technologies Program Reports

Electokinetics Inc. -Theoretical and Experimental Modeling of Multispecies...Electrokinetic Soil Processing
- Emerging Tech. Bulletin (EPA/540/F-95/504)
- Emerging Tech. Summary (EPA/600/SR-97/054)
- Emerging Tech. Report (EPA/600/R-97/054) PB97-193056[2]

Energy and Environmental Engineering - Laser-Induced Photochemical Oxidative Destruction
- Emerging Tech. Bulletin (EPA/540/F-92/004)
- Emerging Tech. Summary (EPA/540/SR-92/080)
- Emerging Tech. Report (EPA/540/R-92/080)[3] PB93-131431

Energy and Environmental Research Corporation - Hybrid Fluidized Bed System
- Emerging Tech. Bulletin (EPA/540/F-93/508)

FERRO Corporation - Waste Vitrification Through Electric Melting
- Emerging Tech. Bulletin (EPA/540/F-95/503)

Florida International University (or Electron Beam Research Facility)
- Electron Beam Treatment for Removal of Benzene and Toluene from Aqueous Streams and Sludge
- Emerging Tech. Bulletin (EPA/540/F-93/502)

- Electron Beam Treatment for the Trichloroethylene and Tetrachloroethylene from Aqueous Stream
- Emerging Tech. Bulletin (EPA/540/F-92/009)

-Removal of Phenol from Aqueous Solutions Using High Energy Electron Beam Irradiation
- Emerging Tech. Bulletin (EPA/540/F-93/509)

Institute of Gas technology
-Chemical and Biological Treatment (CBT)
- Emerging Tech. Bulletin (EPA/540/F-94/504)

-Fluid Extraction-Biological Degradation Process
- Emerging Tech. Bulletin (EPA/540/F-94/501)

IT Corporation - Innovative Methods for Bioslurry Treatment
- Emerging Tech. Bulletin (EPA/540/F-96/505)
- Emerging Tech. Summary (EPA/540/SR-96/505)
- Emerging Tech. Report (EPA/540/ R-96/505) PB97-176820[2]

IT Corporation - Photolysis/Biodegradation of PCB and PCDD/PCDF Contaminated Soils
- Emerging Tech. Bulletin (EPA/540/F-94/502)
- Emerging Tech. Summary (EPA/540/SR-94/531)
- Emerging Tech. Report (EPA/540/R-94/531)[3] PB95-159992

IT Corporation - Process for the Treatment of Volatile Organic Carbon & Heavy-Metal Contaminated Soil
- Emerging Tech. Bulletin (EPA/540/F-95/509)

J.R. Simplot - Anaerobic Destruction of Nitroaromatics (the SABRE Process)
- Journal Article App.Env.Micro, Vol. 58, pp. 1683-89

Matrix Photocatalytic, Inc. - Photocatalytic Water Treatment
- Journal Article (EPA/600/A-93/282)[3] PB94-130184

Membrane Technology and Research, Inc. - Volatile Organic Compound Removal from Air Streams by Membrane Separation
- Emerging Tech. Bulletin (EPA/540/F-94/503)

M.L. Energia- Reductive Photo-Dechlorination Process for Safe Conversion of Hazardous Chlorocarbon Waste Streams
- Emerging Tech. Bulletin (EPA/540/F-94/508)

New Jersey Institute of Technology - GHEA Associates Process for Soil Washing and Wastewater Treatment
- Emerging Tech. Bulletin (EPA/540/F-94/509)

PURUS, Inc. - Photolytic Oxidation Process [Destruction of Organic Contaminants in Air Using Advanced Ultraviolet Flashlamps]
- Emerging Tech. Bulletin (EPA/540/F-93/501)
- Emerging Tech. Summary (EPA/540/SR-93/516)
- Emerging Tech. Report (EPA/540/R-93/516) PB93-205383

Roy F. Weston, Inc. - Ambersorb 563 Adsorbent
- Emerging Tech. Bulletin (EPA/540/F-95/500)
- Emerging Tech. Summary (EPA/540/SR-95/516)
- Emerging Tech. Report (EPA/540/R-95/516)[3] PB95-264164

---

[1] Order documents free of charge by calling EPA's Center for Environmental Research Information (CERI) at 513-569-7562 or Fax 513-569-8695.

[2] Documents with a PB number are out of stock and must be ordered by that number at cost from:
National Technical Information Service
5285 Port Royal Road
Springfield VA 22161
Telephone 703-487-4650

[3] Out of stock

Emerging Technologies Program Reports

University of Washington - Metals Treatment at Superfund Sites by Adsorptive Filtration

- Emerging Tech. Bulletin (EPA/540/F-92/008)
- Emerging Tech. Summary (EPA/540/SR-93/515)
- Emerging Tech. Report (EPA/540/R-93/515) [3] PB94-170230

Vortec Corporation - Vitrification

- Published Paper, Glass Production Technol International, 1994, p. 103 - 106
- Emerging Tech. Summary (EPA/540/S-97/501)[4]

Wastewater Technology Centre - [A] Cross-Flow Pervaporation System [for Removal of VOC's from Contaminated Water]

- Emerging Tech. Bulletin (EPA/540/F-93/503)
- Emerging Tech. Summary (EPA/540/SR-94/512)
- Emerging Tech. Report (EPA/540/R-94/512) [3] PB95-170230

[1] Order documents free of charge by calling EPA's Center for Environmental Research Information (CERI) at 513-569-7562 or Fax 513-569-8695.
[2] Documents with a PB number are out of stock and must be ordered by that number at cost from:

National Technical Information Service
5285 Port Royal Road
Springfield VA 22161
Telephone 703-487-4650
[3] Out of stock

Measuring and Monitoring Program Reports

Cone Penetrometers

Loral Rapid Optical Screening Tool (ROST)
- Demonstration Bulletin (EPA/540/MR-95/519)
- Innovative Tech. Eval. Report (EPA/540/R-95/519)

Site Characterization Analysis Penetrometer System (SCAPS)
- Demonstration Bulletin (EPA/540/MR-95/520)
- Innovative Tech. Eval. Report (EPA/540/R-95/520)

Field Portable X-Ray Fluorescence

HNU Systems SEFA-P Field Portable X-ray Fluorescence
- Innovative Tech. Eval. Report (EPA/600/R-97/144)

Metorex X-Met 920P and 940 Field Portable X-ray Fluorescence
- Innovative Tech. Eval. Report (EPA/600/R-97/146)

Metorex X-Met 920MP Field Portable X-ray Fluorescence
- Innovative Tech. Eval. Report (EPA/600/R-97/151)

Niton XL Spectrum Field Portable X-ray Fluorescence
- Innovative Tech. Eval. Report (EPA/600/R-97/150)

SciTec MAP Spectrum Field Portable X-ray Fluorescence
- Innovative Tech. Eval. Report (EPA/600/R-97/147)

TN Spectrace TN9000 and TN Pb Field Portable X-ray Fluorescence Analyzers
- Innovative Tech. Eval. Report (EPA/600/R-97/145)

Portable Gas Chromatographs

Analytical & Remedial Technology Purge and Trap Gas Chromatographic Manifod System (AVOS)
- Technology Evaluation Report (EPA/600/R-93/109)

Bruker Mobiel Environmental Monitor
- Technology Evaluation Report (EPA/600/X-91/079)

Field Analytical Screening Program (FASP) Method for PCP
- Demonstration Bulletin (EPA/540/R-95/528)
- Innovative Tech. Eval. Report (EPA/540/MR-95/528)

Field Analytical Screening Program (FASP) Method for PCB
- Demonstration Bulletin (EPA/540/R-95/521)
- Innovative Tech. Eval. Report (EPA/540/MR-95/521)

HNU Portable Gas Chromatograph
- Results reported in the Proceedings of the U.S. EPA Third International Field Screening Symposium Volume 2, Pages 682-693 (1993)

Photovac Portable Gas Chromatograph
- Results reported in the Proceedings of the U.S. EPA Third International Field Screening Symposium Volume 2, Pages 682-693 (1993)

Sentex Portable Gas Chromatograph
- Results reported in the Proceedings of the U.S. EPA Third International Field Screening Symposium Volume 2, Pages 682-693 (1993)

SRI Instruments Low Temperature Thermal Desorption System
- Results reported in the Proceedings of the U.S. EPA Third International Field Screening Symposium Volume 2, Pages 682-693 (1993)

---

[1] Order documents free of charge by calling EPA's Center for Environmental Research Information (CERI) at 513-569-7562 or Fax 513-569-8695.

[2] Documents with a PB number are out of stock and must be ordered by that number at cost from:

National Technical Information Service
5285 Port Royal Road
Springfield VA 22161
Telephone 703-487-4650

[3] Out of stock

Measuring and Monitoring Program Reports

Spectrometers

MDA Scientific Long-Path Fourier Transform Infrared Spectrometer
- Technology Evaluation Report (EPA/600/S3-91/071)

Xontech, Inc. Canister-based Sector Sample
- Report (EPA/600/S3-91/071)

PCP/PCB Immunoassay Test Kits

Char-N-Soil PCB Test Kit - Dexel
- Demonstration Bulletin (EPA/540/MR-95/518)
- Innovative Tech. Eval. Report (EPA/540/ R-95/518)

EnviroGard PCB Test Kit - Millipore Inc.
- Demonstration Bulletin (EPA/540/MR-95/517)
- Innovative Tech. Eval. Report (EPA/540/ R-95/517)

Millipore Immunoasay Test Kit for PCB
- Demonstration Bulletin (EPA/540/MR-95/517)
- Innovative Tech. Eval. Report (EPA/540/ R-95/517)

PCP Immunoassay Technologies: Ensys Inc. - PENTA Risc: Ohmicron Corp., - Penta RaPid; Millipore Inc. -
- Demonstration Bulletin (EPA/540/MR-95/514)
- Innovative Tech. Eval. Report (EPA/540/R-95/514)

Envirogard
- Demonstration Bulletin (EPA/540/MR-95/515)
- Innovative Tech. Eval. Report (EPA/540/ R-95/514)

U-Hanby PCP Test Kit
- Demonstration Bulletin (EPA/540/MR-95/515)
- Innovative Tech. Eval. Report (EPA/540/ R-95/515)

Westinghouse PCP Test Kit
Technology Evaluation Report (EPA/600/X-90/146)

Soil & Soil Gas Samples

Art's Manufacturing Soil Sampler
- Innovative Tech. Eval. Report (EPA/600/R-98/093)

Clements & Associates Soil Sampler
- Innovative Tech. Eval. Report (EPA/600/R-98/097)

Geoprobe® Soil Sampler
- Innovative Tech. Eval. Report (EPA/600/R-98/092)

Simulprobe® Soil Sampler
- Innovative Tech. Eval. Report (EPA/600/R-98/094)

Quandrel Soil Gas Sampler
- Innovative Tech. Eval. Report (EPA/600/R-98/096)

W.L. Gore & Associates Soil Gas Sampler
- Innovative Tech. Eval. Report (EPA/600/R-98/095)

[1] Order documents free of charge by calling EPA's Center for Environmental Research Information (CERI) at 513-569-7562 or Fax 513-569-8695.
[2] Documents with a PB number are out of stock and must be ordered by that number at cost from:

National Technical Information Service
5285 Port Royal Road
Springfield VA 22161
Telephone 703-487-4650
[3] Out of stock

SITE/NRMRL
SUPERFUND VIDEOTAPE LIBRARY

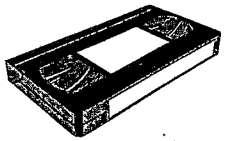

ORDERING INSTRUCTIONS

To obtain your choice of tapes, complete the order form on the opposite side of this page. Enclose the form with your check, made out to *Foster Wheeler Environmental Corporation* and mail to:

Foster Wheeler Environmental Corporation
Attn: Ms. Maria Witkowski
8 Peach Tree Hill Road
Livingston, New Jersey 07039

Only *PREPAID* Orders Can Be Accepted

For further information, contact
Ms. Witkowski at 1-800-580-3765

SITE VIDEOTAPES

These composite videotapes contain a number of EPA-produced documentaries on specific Superfund Innovative Technology Evaluation (SITE) Program demonstrations.

S1 Site Program
(6 Technology Demonstrations):

ECOVA (SHIRCO) Infrared Incineration System, Brandon, FL - 6/87

ECOVA (SHIRCO) Infrared Incineration System, Rose Twp., MI - 3/89

EMTECH (HAZCON) Solidification Process, Douglassville, PA - 10/87

IWT/GEO-CON In-Situ Stabilization and Solidification, Hialeah, FL - 4/88

TERRA VAC Vacuum Extraction System, Groveland, MA - 1/88

CF SYSTEMS Solvent Extraction Unit, New Bedford, MA - 3/89

S2 Site Program
(4 Technology Demonstrations):

ULTROX Ultraviolet Radiation and Oxidation, San Jose, CA - 3/89

BIOTROL Biological Aqueous Treatment, New Brighton, MN - 9/89

BIOTROL Soil Washing System, New Brighton, MN - 9/89

IT/RREL Debris Washing System, Hopkinsville, KY - 12/89

S3 Site Program
(4 Technology Demonstrations):

SOLIDTECH Solidification and Stabilization, Morganville, NJ - 12/88

CHEMFIX Solifidication and Stabilization, Clackamas, OR - 3/89

NOVATERRA (TTUSA) In Situ Steam and Air Stripping, San Pedro, CA - 9/89

AWD Integrated Vapor Extraction/ Steam Vacuum Stripping, Burbank, CA - 9/90

Ms. Maria Witkowski
Foster Wheeler Environmental Corporation
Superfund Videotape Library
8 Peach Tree Hill Road
Livingston, NJ 07039

First Class Mail

S4 Site Program
(4 Technology Demonstrations):

E.I. DUPONT/OBERLIN FILER Membrane Microfiltration, Palmerton, PA - 5/90

HORSEHEAD Flame Reactor, Atlanta, GA - 3/91

RETECH Plasma Centrifugal Furnace, Butte, MT - 7/91

BABCOCK & WILCOX Cyclone Furnace, Alliance, OH - 11/91

S5 Site Program
(4 Technology Demonstrations):

STC Immobilization of Organic/ Inorganic Contaminants in Soils, Selma, CA - 11/90

THC Soil Recycle Treatment Train at Toronto Harbor, Toronto, Ont., Canada - 5/92

R.C.C. Basic Extractive Sludge Treatment (B.E.S.T.), Grand Calumet River, Gary, IN - 7/92

PEROXIDATION SYSTEMS INC. Purox-Pure Chemical Oxidation Treatment, Altamont Hills, CA - 9/92

S6 Site Program
(4 Technology Demonstrations):

BERGMANN Soil/Sediment Washing Technology, Saginaw Bay, MI - 2/93

BESCORP Soil Washing System, Fairbanks, AK - 8/92

ELI Eco Logic International Inc., Hydrogen Reduction Gas-Phase Chemical Reduction Process, Bay City, MI - 11/93

MAGNUM Water Technology CAV-OX Ultraviolet Oxidation Process, Edwards AFB, CA - 1/94

S7 Site Program
(4 Technology Demonstrations):

TEXACO Gasification Process, South El Monte, CA - 6/95

SFC 0.5 Oleofiltration System, Pembroke, FL - 1/95

ITT Radio Frequency Heating Process, Kelly AFB, San Antonio, TX - 3/95

KAI Radio Frequency Heating Process, Kelly Air Force Base, San Antonio, TX - 4/95

R1 RREL/RCB Research Programs

This composite videotape contains five documentaries conducted under the auspices of the Risk Reduction Engineering Laboratory's Releases Control Branch:

- Synthetic Soils Matrix (SSM) Program
- Dioxin and the Mobile Incineration System
- Mobile Carbon Regeneration System
- Mobile Soils Washing System
- Mobile In Situ Containment/ Treatment Unit

Mail this form *(with check)* to:

Foster Wheeler Environmental Corporation
Attn: Ms. Maria Witkowski
8 Peach Tree Hill Road
Livingston, NJ 07039

Videotape Request Form

	S1 SITE Program Tape	$30.00	
	S2 SITE Program Tape	$30.00	
	S3 SITE Program Tape	$30.00	
	S4 SITE Program Tape	$30.00	
	S5 SITE Program Tape	$30.00	
	S6 SITE Program Tape	$30.00	
	S7 SITE Program Tape	$30.00	
	R1 RREL/ RCB Research Programs Tape	$30.00	

Shipping & Handling	$5.00 charge per tape	$5.00	
Int'l Orders	International surcharge per tape	$10.00	
Total Cost			

Ship to:

Name

Company

Address

City/ State/ Zip

Telephone

Trade Name Index and Applicability Index

The following pages contain the Trade Name Index and the Applicability Index. The Trade Name Index cross-references all technologies that are registered or have a copyright, registered trademark, or service mark. Former company names and former technology names are also cross-referenced in the index. The volume number is given for each entry, followed by the page number. In addition, all former technology names are shown with their current names in parentheses.

The Applicability Index is organized by three different levels. The first level is media, the second is waste, and the third is technology type. The 12 media categories include the following: (1) air, (2) gas, (3) leachate, (4) liquid, (5) mine tailings, (6) other, (7) sediment, (8) sludge, (9) soil, (10) solids, (11) water, and (12) wastewater. The 19 contaminant categories include the following: (1) aromatic VOCs, (2) cyanide, (3) dioxins, (4) explosives, (5) furans, (6) halogenated VOCs, (7) heavy metals, (8) herbicides, (9) hydrocarbons, (10) metals, (11) other, (12) PAHs, (13) PCBs, (14) PCPs, (15) pesticides, (16) petroleum hydrocarbons, (17) radionuclides, (18) SVOCs, and (19) VOCs. The 14 technology type categories include the following: (1) biological degradation, (2) cone penetrometers, (3) field portable x-ray fluorescence, (4) materials handling, (5) other, (6) physical/chemical, (7) physical/chemical biological degradation, (8) physical/chemical radioactive waste treatment, (9) physical/chemical thermal desorption, (10) portable gas chromatographs, (11) solidification/stabilization, (12) spectrometers, (13) test kits, and (14) thermal destruction.

To use the Applicability Index, a three-step search must be completed. For example, to search for thermal desorption technologies that clean up soil contaminated with polychlorinated biphenyls (PCB), first look under soil, then PCBs, and finally physical/chemical thermal desorption.

TRADE NAME INDEX

Company/Technology Name	Volume, Page Number
2-PHASE™ EXTRACTION Process	V1, 180
ABB Environmental Services, Inc. (see Harding Lawson Associates)..	V2, 50
Accutech Remedial Systems, Inc. (see ARS Technologies).	V1, 24
Acid Extraction Treatment System.	V2, 30
Acoustic Barrier Particulate Separator.	V2, 48
Active Environmental, Inc..	V1, 20
Adsorption-Integrated-Reaction Process.	V2, 74
Adsorptive Filtration.	V2, 110
AEA Technology Environment..	V2, 16
AIR-II (Adsorption-Integrated-Reaction) Process	V1, 200
AIR-II (Adsorption-Integrated-Reaction) Process	V2, 74
Air-Sparged Hydrocyclone.	V2, 82
AirSentry Fourier Transform Infrared Spectrometer.	V3, 28
ALCOA Separation Technology, Inc. (see Media & Process Technology).	V2, 78
AlgaSORB© Biological Sorption.	V2, 96
Alternating Current Electrocoagulation Technology.	V2, 92
Aluminum Company of America (see Media & Process Technology)..	V2, 78
Ambersorb® 563 Adsorbent	V2, 116
American Combustion, Inc..	V1, 22
AMS™ Dual-Tube Liner Soil Sampler.	V3, 16
Anaerobic-Aerobic Sequential Bioremediation of PCE..	V2, 50
Anaerobic Thermal Processor..	V1, 150
Analytical and Remedial Technology, Inc..	V3, 14
Anodic Stripping Voltammetry for Mercury in Soil..	V3, 58
Arctic Foundations, Inc..	V1, 190
Arizona State University/Zentox Corporation..	V2, 18
ARS Technologies, Inc..	V1, 24
ART International, Inc..	V2, 20
Art's Manufacturing and Supply.	V3, 16
Atomic Energy of Canada, Limited (Chemical Treatment and Ultrafiltration).	V2, 22
Atomic Energy of Canada, Limited (Ultrasonic-Aided Leachate Treatment).	V2, 24
Augmented In Situ Subsurface Bioremediation Process.	V1, 34
Automated Sampling and Analytical Platform.	V3, 14
Base-Catalyzed Decomposition Process.	V1, 116
Batch Steam Distillation and Metal Extraction.	V2, 64
Battelle Memorial Institute.	V2, 26
Bergmann, A Division of Linatex, Inc..	V1, 26
Berkeley Environmental Restoration Center.	V1, 28
B.E.S.T. Solvent Extraction Technology.	V1, 104
Billings and Associates, Inc..	V1, 30
BiMelze® Mercury Immunoassay.	V3, 18
Binax Corporation, Antox Division (see Idetek, Inc.).	V3, 46
Bio-Recovery Systems, Inc..	V2, 96
Bio-Rem, Inc..	V1, 34
Biofilm Reactor for Chlorinated Gas Treatment.	V2, 94
BioGenesis Enterprises, Inc..	V1, 32
BioGenesis℠ Soil and Sediment Washing Process	V1, 32
Biological Aqueous Treatment System.	V1, 38
Biological/Chemical Treatment.	V2, 36

TRADE NAME INDEX (continued)

Biomineralization of Metals. V2, 130
Bionebraska, Inc.. . . . . V3, 18
Bioscrubber. V2, 78
Bioslurry Reactor. V1, 64
Biotherm Process™. V1, 36
Biotherm, LCC. V1, 36
Biotrol® (Biological Aqueous Treatment System). V1, 38
Biotrol® (Soil Washing System). V1, 40
Biotrol® (Methanotrophic Bioreactor System). V2, 28
Bioventing V1, 208
Brice Environmental Services Corporation. V1, 42
Bruker Analytical Systems, Inc.. . . . . V3, 20
BWX Technologies, Inc.. . . . . V1, 44
Calgon Carbon Advanced Oxidation Technologies. V1, 46
Cambell Centrifugal Jig (CCJ). V2, 84
Canonie Environmental Services Corporation (see Smith Environmental Technologies Corporation). V1, 148
Carver-Greenfield Process® for Solvent Extraction of Wet, Oily Wastes (see Biotherm Process™) V1, 36
CAV-OX® Process V1, 108
Center for Hazardous Materials Research (Acid Extraction Treatment System). V2, 30
Center for Hazardous Materials Research (Organics Destruction and Metals Stabilization). V2, 32
Center for Hazardous Materials Research (see Concurrent Technologies). V2, 34
Center Pivot Spray Irrigation System. V1, 170
CF Systems Corporation. V1, 48
Chelation/Electrodeposition of Toxic Metals from Soils. V2, 66
Chemfix Technologies, Inc.. . . . . V1, 50
Chemical and Biological Treatment. V2, 56
Chemical Treatment and Ultrafiltration. V2, 22
Chemical Waste Management, Inc. (see OHM Remediation Services Corp.). V1, 178
Chemical Waste Management, Inc. (see Wheelabrator Clean Air Systems, Inc.). V1, 136
Chromated Copper Arsenate Soil Leaching Process. V2, 76
Circulating Bed Combustor. V1, 80
Clay-Based Grouting Technology. V1, 114
Clean Berkshires, Inc. (see Maxymillian Technologies, Inc.). V1, 112
Clements, Inc.. . . . . V3, 24
Cognis, Inc. (TERRAMET® Soil Remediation System). V1, 52
Cognis, Inc. (Biological/Chemical Treatment). V2, 36
Cold-Top Ex Situ Vitrification of Chromium-Contaminated Soils V1, 86
Colloid Polishing Filter Method® (CPFM®). V1, 76
Colorado School of Mines V1, 54
Colorado Department of Public Health and Environment. V1, 54
Commodore Applied Technologies, Inc.. . . . . V1, 56
Compact Gas Chromatograph.. . . . . V3, 66
Concentrated Chloride Extraction and Recovery of Lead. V2, 136
Concurrent Technologies. V2, 34
Constructed Wetlands-Based Treatment. V1, 54
Coordinate, Chemical Bonding, and Adsorption Process. V2, 114
Core Barrel Soil Sampler.. . . . . V3, 62
Cross-flow Pervaporation System. V1, 182
Cryogenic Barrier. V1, 190
C-THRU Technologies Corporation. V3, 22
CURE International, Inc.. . . . . V1, 58

TRADE NAME INDEX (Continued)

CURE® - Electrocoagulation Wastewater Treatment System V1, 58
Cyclone Furnace. V1, 44
DARAMEND™ Bioremediation Technology V1, 90
Debris Washing System. V1, 122
Dechlorination and Immobilization. V1, 78
Dehydro-Tech Corporation (see Biotherm, LCC). V1, 36
Desorption and Vapor Extraction System (DAVES). V1, 220
Dexsil Corporation. V3, 26
DOW Environmental, Inc. (See Radian International LLC) V1, 138
Duke Engineering and Services, Inc.. . . . . V1, 192
E.I. Dupont de Nemours and Company, and Oberlin Filter Company. V1, 60
Dynaphore, Inc.. . . . . V1, 62
Ecova Corporation. V1, 64
EET, Inc. (see Active Environmental, Inc.). V1, 20
EG&G Environmental, Inc. (See Mactec-SBP Technologies Company, L.L.C.). V1, 204
Electro-Pure Systems, Inc.. . . . . V2, 92
Electrochemical Peroxidation of PCB-Contaminated Sediments and Waters. V2, 98
Electroheat-Enhanced Nonaqueous-Phase Liquids Removal. V1, 196
Electrokinetic Soil Processing. V1, 66
Electrokinetics, Inc. (Electrokinetic Soil Processing). V1, 66
Electrokinetics, Inc. (In Situ Bioremediation by Electrokinetic Injection). V2, 120
Electron Beam Research Facility, Florida International University and University of Miami
(see High Voltage Environmental Applications, Inc.). V1, 94
Eli Eco Logic Inc.. . . . . V1, 68
Eli Eco Logic International Inc.. . . . . V1, 70
Emflux® Soil-Gas Survey System. V3, 54
Energia, Inc. (Reductive Photo-Dechlorination Treatment). V2, 38
Energia, Inc. (Reductive Thermal and Photo-Thermal Oxidation Processes for Enhanced
Conversion of Chlorocarbons). V2, 122
Energy and Environmental Engineering, Inc.. . . . . V2, 112
Energy and Environmental Research Corporation (Hybrid Fluidized Bed System). V2, 40
Energy and Environmental Research Corporation (Reactor Filter System). V2, 42
Ensys Penta Test System. V3, 68
Ensys Environmental Products, Inc. (see Strategic Diagnostic). V3, 68
Enviro-Sciences Systems, Inc.. . . . . V2, 20
Envirobond™ Solution. V1, 222
EnviroGard Corporation (see Strategic Diagnostic). V3, 70
EnviroGard™ PCB Immunoassay Test Kit. V3, 70
EnviroMetal Technologies, Inc. (In Situ and Ex Situ Metal-Enhanced Abiotic Degradation of
Dissolved Halogenated Organic Compounds in Groundwater). V1, 72
EnviroMetal Technologies, Inc. (Reactive Barrier). V1, 194
Environmental Technologies Group, Inc.. . . . . V3, 28
Environmental BioTechnologies, Inc.. . . . . V2, 44
Environmental Test Kits. V3, 26
EPOC Water, Inc.. . . . . V1, 74
Equate® Immunoassay. V3, 46
Excavation Techniques and Foam Suppression Methods.. . . . . V1, 166
Ex Situ Biovault. V1, 126
EXXFLOW V1, 74

TRADE NAME INDEX (Continued)

Ferro Corporation. V2, 46
Field Analytical Screening Program- PCB method.. . . . . V3, 78
Field Analytical Screening Program- PCP method.. . . . . V3, 80
Field Portable X-Ray Fluorescence Analyzers. V3, 48
Filter Flow Technology, Inc.. . . . . V1, 76
Flame Reactor. V1, 96
Fluid Extraction-Biological Degradation Process. V2, 58
Fluidized-Bed/Cyclonic Agglomerating Combustor. V2, 60
FORAGER® Sponge V1, 62
Frequency-Tunable Pulse Combustion System.. . . . . V1, 154
Fugro Geosciences, Inc.. . . . . V3, 30
Funderburk & Associates. V1, 78
Fungal Degradation Process. V2, 44
Fungal Treatment Technology. V1, 120
Gas-Phase Chemical Reduction Process. V1, 68
General Atomics, Nuclear Remediation Technologies Division. V2, 48
General Atomics. V1, 80
Geo-Con, Inc.. . . . . V1, 82
Geo-Microbial Technologies, Inc.. . . . . V2, 124
Geokinetics International, Inc.. . . . . V1, 196
GeoMelt Vitrification. V1, 84
Geoprobe Systems (Large Bore Soil Sampler). V3, 32
Geoprobe Systems (Geoprobe Soil Conductivity Sensor). V3, 34
Geoprobe Soil Conductivity Sensor. V3, 34
Geosafe Corporation. V1, 84
GeoTech Development Corporation. V1, 86
GHEA Associates Process V2, 86
GIS\KEY™ Environmental Data Management System V1, 88
GIS\Solutions, Inc.. . . . . V1, 88
GORE-SORBER® Screening Survey.. . . . . V3, 82
Grace Bioremediation Technologies. V1, 90
Graseby Ionics, Ltd., and PCP, Inc.. . . . . V3, 36
Gruppo Italimpresse. V1, 92
Hanby Environmental Laboratory Procedures, Inc.. . . . . V3, 38
Harding Lawson Associates. V2, 48
Hazardous Substance Management Research Center at New Jersey Institute of Technology
and Rutgers, The State University of New Jersey. V2, 52
Hazcon, Inc. (see Funderburk & Associates). V1, 78
Hewlitt-Packard Company. V3, 40
High Voltage Environmental Applications, Inc. (High-Energy Electron Irradiation). V1, 94
High Voltage Environmental Applications, Inc. (High-Energy Electron Beam Irradiation). V2, 54
High-Energy Electron Beam Irradiation. V2, 54
High Energy Electron Irradiation. V1, 94
HNU Systems Inc. (HNU Source Excited Flourescence Analyzer-Portable [SEFA-P] X-Ray
Fluorescence Analyzer). V3, 42
HNU Systems Inc. (HNU GC 311D Portable Gas Chromatograph). V3, 44
HNU Source Excited Fluorescence Analyser-Portable [SEFA-P] X-Ray Fluorescence Analyzer. V3, 42
HNU GC 311D Portable Gas Chromatograph. V3, 44
Horsehead Resource Development Co., Inc.. . . . . V1, 96
HRUBETZ Environmental Services, Inc.. . . . . V1, 98

TRADE NAME INDEX (Continued)

HRUBOUT® Process V1, 98
Hughes Environmental Systems, Inc.. . . . . V1, 100
Hybrid Fluidized Bed System. V2, 40
Hydraulic Fracturing. V1, 124
Idetek, Inc.. . . . . V3, 46
IIT Research Institute/Brown Root Environmental. V1, 102
In Situ and Ex Situ Metal-Enhanced Abiotic Degradation of Dissolved Halogenated Organic Compounds in Groundwater. V1, 72
In Situ and Ex Situ Vacuum Extraction.. . . . . V1, 160
In Situ Bioremediation by Electrokinetic Injection. V2, 120
In Situ Bioventing Treatment System.. . . . . V1, 130
In Situ Electrokinetic Extraction System. V1, 224
In Situ Electroacoustic Soil Decontamination. V2, 26
In Situ Enhanced Bioremediation of Groundwater. V1, 198
In Situ Mitigation of Acid Water. V2, 108
In Situ Soil Treatment (Steam and Air Stripping).. . . . . V1, 134
In Situ Solidification and Stabilization Process. V1, 82
In Situ Steam Enhanced Extraction Process. V1, 28
In Situ Thermally Enhanced Extraction (TEE) Process. V1, 216
In Situ Vitrification V1, 84
Infrared Thermal Destruction. V1, 92
Institute of Gas Technology (Chemical and Biological Treatment). V2, 56
Institute of Gas Technology (Fluid Extraction-Biological Degradation Process). V2, 58
Institute of Gas Technology (Fluidized-Bed/Cyclonic Agglomerating Combustor). V2, 60
Institute of Gas Technology (Supercritical Extraction/Liquid Phase Oxidation). V2, 62
Integrated AquaDetox Steam Vacuum Stripping and Soil Vapor Extraction/Reinjection V1, 138
Ion Mobility Spectrometry. V3, 36
Ionics RCC. V1, 104
IT Corporation (Batch Steam Distillation and Metal Extraction). V2, 64
IT Corporation (Chelation/Electrodeposition of Toxic Metals from Soils). V2, 66
IT Corporation (Mixed Waste Treatment Process). V2, 68
IT Corporation (Photolytic and Biological Soil Detoxification). V2, 70
IT Corporation (Tekno Associates Bioslurry Reactor). V2, 72
IT Corporation (Oxygen Microbubble In Situ Bioremediation). V2, 126
ITT Night Vision. V1, 198
JMC Environmentalist's Subsoil Probe. V3, 24
KAI Technologies, Inc./Brown and Root Environmental. V1, 106
KSE, Inc.. . . . . V1, 200
KSE, Inc.. . . . . V2, 24
Large Bore Soil Sampler. V3, 32
Lasagna™ In Situ Soil Remediation V1, 202
Lasagna™ Public-Private Partnership. V1, 202
Lewis Environmental Services, Inc./Hickson Corporation. V2, 76
Liquid and Soils Biological Treatment.. . . . . V1, 140
Liquified Gas Solvent Extraction (LG-SX) Technology. V1, 48
Loral Corporation (see Fugro Geosciences, Inc.). V3, 30
Low Temperature Thermal Aeration (LTTA®). V1, 148
Low Temperature Thermal Treatment System (LT^3®). V1, 174
Low-Energy Extraction Process (LEEP®). V2, 20

TRADE NAME INDEX (Continued)

MAECTITE® Chemical Treatment Process V1, 228
Mactec-SBP Technologies Company, L.L.C.. . . . . V1, 204
Magnum Water Technology. V1, 108
Matrix Photocatalytic Inc. (Photocatalytic Water Treatment). V1, 110
Matrix Photocatalytic Inc. (Photocatalytic Air Treatment). V1, 206
Maxymillian Technologies, Inc.. . . . . V1, 112
Media & Process Technology.. . . . . V2, 78
Membrane Filtration and Bioremediation.. . . . . V1, 144
Membrane Microfiltration. V1, 60
Membrane Technology and Research, Inc.. . . . . V2, 80
Metal Analysis Probe (MAP®) Portable Assayer. V3, 22
Metal Analysis Probe (MAP®) Spectrum Assayer. V3, 22
Metals Immobilization and Decontamination of Aggregate Solids (MeIDAS). V2, 88
Metals Release and Removal from Wastes. V2, 124
Methanotrophic Bioreactor System V2, 28
Metorex, Inc.. . . . . V3, 48
Microsensor Systems, Incorporated. V3, 50
Mixed Waste Treatment Process. V2, 68
Mobile Environmental Monitor. V3, 20
Montana College of Mineral Science and Technology (Air-Sparged Hydrocyclone). V2, 82
Montana College of Mineral Science and Technology (Cambell Centrifugal Jig). V2, 84
Morrison Knudsen Corporation/Spetstamponazhgeologia Enterprises. V1, 114
MSI-301A Vapor Monitor. V3, 50
MTI Analytical Instrument, Inc. (see Hewlitt-Packard Company). V3, 40
National Risk Management Research Laboratory (Base-Catalyzed Decomposition Process). V1, 116
National Risk Management Research Laboratory (Volume Reduction Unit). V1, 118
National Risk Management Research Laboratory (Bioventing). V1, 208
National Risk Management Research Laboratory and Intech 180 Corporation. V1, 120
National Risk Management Research Laboratory and IT Corporation. V1, 122
National Risk Management Research Laboratory, University of Cincinnati, and FRX, Inc.. . . . . V1, 124
New Jersey Institute of Technology. V2, 86
New York State Department of Environmental Conservation/ENSR Consulting and
Engineering and Larsen Engineers. V1, 126
New York State Department of Environmental Conservation/SBP Technologies, Inc.. . . . . V1, 128
New York State Department of Environmental Conservation/R.E. Wright Environmental, Inc.. . . . . V1, 130
Niton Corporation. V3, 52
North American Technologies Group, Inc... . . . . V1, 132
Novaterra Associates.. . . . . V1, 134
NoVOCs™ In-Well Stripping Technology V1, 204
OHM Remediation Services Corporation (X*TRAX™ Thermal Desorption). V1, 136
OHM Remediation Services Corporation (see IT Corporation). V2, 126
Ohmicron Corporation (see Strategic Diagnostic). V3, 72
Oleophilic Amine-Coated Ceramic Chip.. . . . . V1, 132
Organic Stabilization and Chemical Fixation/Solidification. V1, 156
Organics Destruction and Metals Stabilization. V2, 32
Oxygen Microbubble In Situ Bioremediation. V2, 126
PCB- and Organochlorine-Contaminated Soil Detoxification. V2, 104
PE Photovac Voyager Portable Gas Chromatograph. V3, 56
PENTA RISc Test System (see Ensys Penta Test System) V3, 68
perox-pure™ Chemical Oxidation Technology. V1, 46

TRADE NAME INDEX (Continued)

Photocatalytic Air Treatment. V1, 206
Photocatalytic Oxidation with Air Stripping. V2, 18
Photocatalytic Water Treatment. V1, 110
PhotoCAT™ Process. V2, 112
Photoelectrocatalytic Degradation and Removal. V2, 138
Photolytic and Biological Soil Detoxification. V2, 70
Photolytic Destruction of Vapor-Phase Halogens. V1, 218
Photolytic Oxidation Process. V2, 102
Photothermal Detoxification Unit. V2, 106
Photovac International, Inc (see Photovac Monitoring Instruments). V3, 56
Photovac Monitoring Instruments. V3, 56
Phytokinetics, Inc. (Phytoremediation Process). V1, 210
Phytokinetics, Inc. (Phytoremediation of Contaminated Soils). V2, 128
Phytoremediation of Contaminated Soils. V2, 128
Phytoremediation of TCE-Contaminated Shallow Groundwater. V1, 234
Phytoremediation Process. V1, 210
Phytoremediation Technology. V1, 212
Phytotech. V1, 212
Pintail Systems, Inc. (Spent Ore Bioremediation Process). V1, 214
Pintail Systems, Inc. (Biomineralization of Metals). V2, 130
Pneumatic Fracturing and Bioremediation Process. V2, 52
Pneumatic Fracturing Extraction℠ and Catalytic Oxidation. V1, 24
PO*WW*ER™ Technology. V1, 178
Portable Gas Analyzer/HP Micro GC. V3, 40
Praxis Environmental Technologies, Inc.. . . . . V1, 216
Precipitation, Microfiltration, and Sludge Dewatering. V1, 74
Process Technologies Incorporated. V1, 218
PSI Technologies, A Division of Physical Sciences Inc.. . . . . V2, 88
Pulse Sciences, Inc. (X-Ray Treatment of Aqueous Solutions). V2, 90
Pulse Sciences, Inc. (X-Ray Treatment of Organically Contaminated Soils). V2, 132
Purus, Inc. (see Thermatrix, Inc.). V2, 102
PYRETON® Thermal Destruction V1, 22
PYROKILN THERMAL ENCAPSULATION Process. V2, 100
Quadrel Services, Inc.. . . . . V3, 54
Radian International LLC.. . . . . V1, 138
Radio Frequency Heating (from ITT Research Institute/Brown and Root Environmental). V1, 102
Radio Frequency Heating (from KAI Technologies, Inc./Brown and Root Environmental). V1, 106
Radiometer Analytical Group. V3, 58
Rapid Optical Screening Tool. V3, 30
RaPID Assay® V3, 72
Reactive Barrier. V1, 194
Reactor Filter System. V2, 42
RECRA Environmental, Inc.. . . . . V2, 92
Recycling Sciences International, Inc.. . . . . V1, 220
Reductive Photo-Dechlorination Treatment. V2, 38

TRADE NAME INDEX (Continued)

Reductive Thermal and Photo-Thermal Oxidation Processes for Enhanced Conversion of Chlorocarbons. V2, 122
Remediation Technologies, Inc. (Liquid and Solids Biological Treatment). V1, 140
Remediation Technologies, Inc. (Biofilm Reactor for Chlorinated Gas Treatment). V2, 94
Resource Management & Recovery. V2, 96
Rochem Disc Tube™ Module System V1, 142
Rochem Separation Systems, Inc... . . . . V1, 142
Rocky Mountain Remediation Services, L.L.C.. . . . . V1, 222
The SABRE™ (Simplot Anaerobic Biological Remediation) Process V1, 146
Sandia National Laboratories. V1, 224
SBP Technologies, Inc... . . . . V1, 144
SCAPS Cone Penetrometer V3, 64
Scentograph Plus II Portable Gas Chromatograph.. . . . . V3, 60
SCITEC Corporation (see C-THRU Technologies Corporation). V3, 22
SEFA-P (Source Excited Fluorescence Analyzer-Portable) V3, 42
Segmented Gate System. V2, 134
Selentec Environmental Technologies, Inc.. . . . . V1, 226
Selentec MAG*SEP℠ Technology. V1, 226
Sentex Systems, Inc... . . . . V3, 60
Sevenson Environmental Services, Inc.. . . . . V1, 228
Shirco Infrared Systems, Inc. (see Gruppo Italimpresse) V1, 92
Silicate Technology Corporation (see STC Remediation, Inc.). V1, 156
J.R. Simplot Company.. . . . . V1, 146
Simulprobe® Technologies, Inc... . . . . V3, 62
Site Characterization and Analysis Penetrometer System (SCAPS).. . . . . V3, 76
Sive Services. V1, 230
Smelting Lead-Containing Waste. V2, 34
Smith Environmental Technologies Corporation.. . . . . V1, 148
Soil and Sediment Washing. V1, 26
Soil Recycling.. . . . . V1, 164
Soil Rescue Remediation Fluid. V1, 232
Soil Separation and Washing Process. V2, 16
Soiltech ATP Systems, Inc... . . . . V1, 150
Soil Washing Process. V1, 42
Soil Washing System. V1, 40
Solidification and Stabilization (from Chemfix Technologies, Inc.). V1, 50
Solidification and Stabilization (from Soliditech, Inc.). V1, 152
Solidification and Stabilization (from Wastech, Inc.). V1, 172
Soliditech, Inc... . . . . V1, 152
Solvated Electron Technology, SET™ Remediation System. V1, 56
Solvent Extraction Treatment System.. . . . . V1, 158
Sonotech, Inc... . . . . V1, 154
Space and Naval Warfare Systems Center.. . . . . V3, 64
Spent Ore Bioremediation Process. V1, 214
SRI Instruments.. . . . . V3, 66
Star Organics, L.L.C.. . . . . V1, 232
State University of New York at Oswego, Environmental Research Center. V2, 98
Steam Injection and Vacuum Extraction. V1, 230

TRADE NAME INDEX (Continued)

STC Remediation, Inc... V1, 156
Steam Enhanced Recovery Process. V1, 100
Strategic Diagnostic, Inc. (Ensys Penta Test System).. V3, 68
Strategic Diagnostic, Inc. (EnviroGard™ PCB Immunoassay Test Kit).. V3, 70
Strategic Diagnostic, Inc. (RaPid Assay®).. V3, 72
Subsurface Volatilization and Ventilation System (SVVS®). V1, 30
Supercritical Extraction/Liquid Phase Oxidation. V2, 62
Surfactant Enhanced Aquifer Remediation of Nonaqueous Phase Liquids. V1, 192
Svedala Industries, Inc.. V2, 100
TECHXTRACT® Process V1, 20
Tekno Associates Bioslurry Reactor. V2, 72
Terra-Kleen Response Group, Inc... V1, 158
TERRAMET® Soil Remediation System V1, 52
Terra Vac.. V1, 160
Test Kits for Organic Contaminants in Soil and Water. V3, 38
Texaco Gasification Process.. V1, 162
Texaco Inc... V1, 162
THERM-O-DETOX® System V1, 116
Thermal Desorption System. V1, 112
Thermal Desorption Unit. V1, 70
Thermatrix, Inc.. V2, 102
Thermo Nutech, Inc.. V2, 134
TMA Thermo Analytical, Inc. (See Thermo Nutech, Inc.). V2, 134
TN 9000 and TN Pb X-Ray Fluorescence Analyzers.. V3, 74
TN Spectrace.. V3, 74
Toronto Harbour Commission.. V1, 162
Tri-Services.. V3, 76
Trinity Environmental Technologies, Inc.. V2, 104
Two-Zone, Plume Interception, In Situ Treatment Strategy. V2, 50
Ultrasonic-Aided Leachate Treatment. V2, 24
Ultraviolet Radiation and Oxidation. V1, 168
Ultrox, A Division of Zimpro Environmental, Inc. (see U.S. Filter/WTS Ultrox). V1, 168
United States Environmental Protection Agency (Excavation Techniques and Foam Suppression Methods).. V1, 166
United States Environmental Protection Agency (Field Analytical Screening Program-PCB Method).. V3, 78
United States Environmental Protection Agency (Field Analytical Screening Program-PCP Method).. V3, 80
University of Houston. V2, 136
University of Dayton Research Institute. V2, 106
University of Nebraska-Lincoln. V1, 170
University of South Carolina. V2, 108
University of Washington. V2, 110
University of Wisconsin-Madison. V2, 138
U.S. Air Force. V1, 234
U.S. Filter/WTS Ultrox.. V1, 168
U.S. Filter/Zimpro Inc. (see U.S. Filter/WTS Ultrox).. V1, 168
UV Technologies, Inc.. V2, 112
UVB System-Vacuum Vaporized Well V1, 176
Vacuum-Vaporized Well System. V1, 128
VaporSep® Membrane Process V2, 80

TRADE NAME INDEX (Continued)

Vitrification Process. V1, 236
Volume Reduction Unit. V1, 118
Vortec Corporation. V1, 236
Vulcan Peroxidation Systems, Inc. (see Calgon Carbon Advanced Oxidation Technologies) V1, 46
W.L. Gore and Associates, Inc... . . . . V3, 82
Waste Vitrification Through Electric Melting. V2, 46
Wastech, Inc.. . . . . V1, 172
Western Product Recovery Group, Inc.. . . . . V2, 114
Roy F. Weston, Inc. (Low Temperature Thermal Treatment System). V1, 174
Roy F. Weston, Inc. (Ambersorb® 563 Adsorbent). V2, 116
Roy F. Weston, Inc./IEG Technologies. V1, 176
Wheelabrator Clean Air Systems, Inc.. . . . . V1, 178
Xerox Corporation. V1, 180
X-Ray Treatment of Aqueous Solutions. V2, 90
X-Ray Treatment of Organically Contaminated Soils. V2, 132
X*TRAX™ Thermal Desorption. V1, 136
XL Spectrum Analyzer. V3, 52
Xontech Incorporated.. . . . . V3, 84
XonTech Sector Sampler.. . . . . V3, 84
ZenoGem™ Process V1, 184
Zenon Environmental Inc. (ZenoGem™ Process). V1, 184
Zenon Environmental Inc. (Cross-flow Pervaporation System). V1, 182

APPLICABILITY INDEX

Media	Contaminants	Treatment Type	Technology Vendor	Technology	Volume, Page Number
Air	Aromatic VOCs	Biological Degradation	Media & Process Technology	Bioscrubber	V2,78
			Remediation Technologies, Inc.	Biofilm Reactor for Chlorinated Gas Treatment	V2,94
		Materials Handling	U.S. EPA	Excavation Techniques and Foam Suppression Methods	V1,166
		Physical/ Chemical	ARS Technologies, Inc.	Pneumatic Fracturing Extraction and Catalytic Oxidation	V1,24
			Energia, Inc.	Reductive Thermal and Photo-Thermal Oxidation for Enhanced Conversion of Chlorocarbons	V2,122
			KSE, Inc.	Adsorption-Integrated-Reaction Process	V1,200/ V2,24
			Matrix Photocatalytic Inc.	Photocatalytic Air Treatment	V1,206
			Membrane Technology and Research, Inc.	VaporSep® Membrane Process	V2,80
			Xerox Corporation	2-PHASE™ EXTRACTION Process	V1,180
		Portable Gas Chromatographs	Bruker Analytical Systems, Inc.	Mobile Environmental Monitor	V3,20
			HNU Systems, Inc.	HNU GC 311D Portable Gas Chromatograph	V3,42
			Microsensor Systems, Incorporated	MSI-301A Vapor Monitor	V3,50
			Hewlitt-Packard Company Analytical Instruments	Portable Gas Analyzer	V3,40
			Photovac Monitoring Instruments	PE Photovac Voyager Portable Gas Chromatograph	V3,56
			Sentex Sensing Technology, Inc.	Scentograph Plus II Portable Gas Chromatograph	V3,60
			SRI Instruments	Compact Gas Chromatograph	V3,66
		Spectrometers	Graseby Ionics, Ltd. and PCP Inc.	Ion Mobility Spectrometry	V3,36
			XonTech, Inc.	XonTech Sector Sampler	V3,84
		Thermal Destruction	Sonotech, Inc.	Frequency-Tunable Pulse Combustion System	V1,154
			U. of Dayton Research Institute	Photothermal Detoxification Unit	V2,106
	Dioxins	Materials Handling	U.S. EPA	Excavation Techniques and Foam Suppression Methods	V1,166
		Physical/ Chemical Treatment	Matrix Photocatalytic Inc.	Photocatalytic Air Treatment	V1,206
		Portable Gas Chromatographs	Bruker Analytical Systems, Inc.	Mobile Environmental Monitor	V3,20
		Spectrometers	Graseby Ionics Ltd., and PCP, Inc.	Ion Mobility Spectrometry	V3,36

APPLICABILITY INDEX (continued)

Media	Contaminants	Treatment Type	Technology Vendor	Technology	Volume, Page Number
Air (continued)	Dioxins (continued)	Thermal Destruction	Energy and Environmental Research Corp.	Reactor Filter System	V2,42
			U. of Dayton Research Institute	Photothermal Detoxification Unit	V2,106
	Furans	Materials Handling	U.S. EPA	Excavation Techniques and Foam Suppression Methods	V1,166
		Physical/ Chemical Treatment	Matrix Photocatalytic Inc.	Photocatalytic Air Treatment	V1,206
		Portable Gas Chromatographs	Bruker Analytical Systems, Inc.	Mobile Environmental Monitor	V3,20
		Spectrometers	Graseby Ionics, Ltd., and PCP, Inc.	Ion Mobility Spectrometry	V3,36
		Thermal Destruction	Energy and Environmental Research Corp.	Reactor Filter System	V2,42
			U. of Dayton Research Institute	Photothermal Detoxification Unit	V2,106
	Halogenated VOCs	Biological Degradation	Remediation Technologies, Inc.	Biofilm Reactor for Chlorinated Gas Treatment	V2,94
		Materials Handling	U.S. EPA	Excavation Techniques and Foam Suppression Methods	V1,166
		Physical/ Chemical Thermal Desorption	Process Technologies, Inc.	Photolytic Destruction of Vapor-Phase Halogens	V1,218
		Physical/ Chemical Treatment	ARS Technologies, Inc.	Pneumatic Fracturing Extraction™ and Catalytic Oxidation	V1,24
			Arizona State U./ Zentox Corp.	Photocatalytic Oxidation with Air Stripping	V2,18
			Energia, Inc.	Reductive Photo-Dechlorination Treatment	V2,38
			Energia, Inc.	Reductive Thermal and Photo-Thermal Oxidation Processes for Enhanced Conversion of Chlorocarbons	V2,122
			KSE, Inc.	Adsorption-Integrated-Reaction Process	V1,200/ V2,24
			Matrix Photocatalytic Inc.	Photocatalytic Air Treatment	V1,206
			Membrane Technology and Research, Inc.	VaporSep® Membrane Process	V2,80
			Thermatrix, Inc.	Photolytic Oxidation Process	V2,102
			Roy F. Weston, Inc.	Ambersorb® 563 Adsorbent	V2,116
			Xerox Corp.	2-PHASE™ EXTRACTION Process	V1,180
		Portable Gas Chromatographs	Bruker Analytical Systems, Inc.	Mobile Environmental Monitor	V3,20
			Photovac Monitoring Instruments	PE Photovac Voyager Portable Gas Chromatograph	V3,56
			Sentex Sensing Technology, Inc.	Scentograph Plus II Portable Gas Chromatograph	V3,60

APPLICABILITY INDEX (continued)

Media	Contaminants	Treatment Type	Technology Vendor	Technology	Volume, Page Number
Air (continued)	Halogenated VOCs (continued)	Portable Gas Chromatographs (continued)	SRI Instruments	Compact Gas Chromatograph	V3,66
		Spectrometers	Graseby Ionics, Ltd., and PCP, Inc.	Ion Mobility Spectrometry	V3,36
			XonTech, Inc.	XonTech Sector Sampler	V3,84
		Thermal Destruction	U. of Dayton Research Institute	Photothermal Detoxification Unit	V2,106
	Herbicides	Materials Handling	U.S. EPA	Excavation Techniques and Foam Suppression Methods	V1,166
		Physical/ Chemical Treatment	Matrix Photocatalytic Inc.	Photocatalytic Air Treatment	V1,206
		Portable Gas Chromatographs	Bruker Analytical Systems, Inc.	Mobile Environmental Monitor	V3,20
		Spectrometers	Graseby Ionics, Ltd., and PCP, Inc.	Ion Mobility Spectrometry	V3,36
		Thermal Destruction	U. of Dayton Research Institute	Photothermal Detoxification Unit	V2,106
	Mercury	Contaminant Survey systems	Quadrel Srvices, Inc.	Emflux® Soil-Gas Survey System	V3,54
	Metals	Materials Handling	U.S. EPA	Excavation Techniques and Foam Suppression Methods	V1,166
		Physical/ Chemical Treatment	General Atomics, Nuclear Remediation Technologies Division	Acoustic Barrier Particulate Separator	V2,48
			Matrix Photocatalytic Inc.	Photocatalytic Air Treatment	V1,206
		Portable Gas Chromatographs	HNU Systems, Inc.	HNU GC 311D Portable Gas Chromatograph	V3,42
			Microsensor Systems, Incorporated	MSI-301A Vapor Monitor	V3,50
			Hewlitt-Packard Company	Portable Gas Analyzer	V3,40
		Thermal Destruction	American Combustion, Inc.	PYRETRON® Thermal Destruction	V1,22
			Energy and Environmental Research Corporation	Reactor Filter Systems	V2,42
	PAHs	Portable Gas Chromatographs	Bruker Analytical Systems, Inc.	Mobile Environmental Monitor	V3,20
			SRI Instruments	Compact Gas Chromatograph	V3,66
	PCBs	Materials Handling	U.S. EPA	Excavation Techniques and Foam Suppression Methods	V1,166
		Physical/ Chemical Treatment	Matrix Photocatalytic Inc.	Photocatalytic Air Treatment	V1,206
		Portable Gas Chromatographs	Bruker Analytical Systems, Inc.	Mobile Environmental Monitor	V3,20
			HNU Systems, Inc.	HNU GC 311D Portable Gas Chromatograph	V3,42

APPLICABILITY INDEX (continued)

Media	Contaminants	Treatment Type	Technology Vendor	Technology	Volume, Page Number
Air (continued)	PCBs (continued)	Portable Gas Chromatographs (continued)	Microsensor Systems, Incorporated	MSI-301A Vapor Monitor	V3,50
			Hewlitt-Packard Company	Portable Gas Analyzer	V3,40
			Sentex Technology, Inc.	Scentograph Plus II Portable Gas Chromatograph	V3,60
			SRI Instruments	Compact Gas Chromatograph	V3,66
		Spectrometers	Graseby Ionics, Ltd., and PCP Inc.	Ion Mobility Spectrometry	V3,36
		Thermal Destruction	U. of Dayton Research Institute	Photothermal Detoxification Unit	V2,106
	Pesticides	Materials Handling	U.S. EPA	Excavation Techniques and Foam Suppression Methods	V1,166
		Physical/ Chemical Treatment	Matrix Photocatalytic Inc.	Photocatalytic Air Treatment	V1,206
		Portable Gas Chromatographs	Bruker Analytical Systems, Inc.	Mobile Environmental Monitor	V3,20
			Sentex Sensing Technology, Inc.	Scentograph Plus II Portable Gas Chromatograph	V3,60
			SRI Instruments	Compact Gas Chromatograph	V3,66
		Spectrometers	Graseby Ionics, Ltd., and PCP, Inc.	Ion Mobility Spectrometry	V3,36
		Thermal Destruction	U. of Dayton Research Institute	Photothermal Detoxification Unit	V2,106
	Petroleum Hydrocarbons	Portable Gas Chromatographs	SRI Instruments	Compact Gas Chromatographs	V3,66
	SVOCs	Contaminant Survey Systems	Quadrel Srvices, Inc.	Emflux® Soil-Gas Survey System	V3,54
		Materials Handling	U.S. EPA	Excavation Techniques and Foam Suppression Methods	V1,166
		Physical/ Chemical Thermal Desorption	Process Technologies, Inc.	Photolytic Destruction of Vapor-Phase Halogens	V1,218
		Physical/ Chemical Treatment	ARS Technologies, Inc.	Pneumatic Fracturing Extraction™ and Catalytic Oxidation	V1,24
			Energia, Inc.	Reductive Thermal and Photo-Thermal Oxidation Processes for Enhanced Conversion of Chlorocarbons	V2,122
			Xerox Corp.	2-PHASE™ EXTRACTION Process	V1,180
		Portable Gas Chromatographs	Bruker Analytical Systems, Inc.	Mobile Environmental Monitor	V3,20
		Spectrometers	Graseby Ionics, Ltd., and PCP, Inc.	Ion Mobility Spectrometry	V3,36
			XonTech, Inc.	XonTech Sector Sampler	V3,84
		Thermal Destruction	Sonotech, Inc.	Frequency-Turnable Pulse Combustion System	V1,154
			U. of Dayton Research Institute	Photothermal Detoxification Unit	V2,106

APPLICABILITY INDEX (continued)

Media	Contaminants	Treatment Type	Technology Vendor	Technology	Volume, Page Number
Air (continued)	SVOCs (continued)	Biological Degradation	Media & Process Technology	Bioscrubber	V2,78
		Contaminant Survey systems	Quadrel Srvices, Inc.	Emflux® Soil-Gas Survey System	V3,54
		Materials Handling	U.S. EPA	Excavation Techniques and Foam Suppression Methods	V1,166
		Physical/ Chemical Thermal Desorption	Process Technologies, Inc.	Photolytic Destruction of Vapor-Phase Halogens	V1,218
		Physical/ Chemical Treatment	ARS Technologies, Inc.	Pneumatic Fracturing Extraction™ and Catalytic Oxidation	V1,24
			Arizona State U./ Zentox Corp.	Photocatalytic Oxidation with Air Stripping	V2,18
			Energia, Inc.	Reductive Photo-Dechlorination Treatment	V2,38
			Energia, Inc.	Reductive Thermal and Photo-Thermal Oxidation Processes for Enhanced Conversion of Chlorocarbons	V2,122
			KSE, Inc.	Adsorption-Integrated-Reaction Process	V1,200/ V2,24
			Matrix Photocatalytic Inc.	Photocatalytic Air Treatment	V1,206
			Membrane Technology and Research, Inc.	VaporSep® Membrane Process	V2,80
			Thermatrix, Inc.	Photolytic Oxidation Process	V2,102
			Roy F. Weston, Inc.	Ambersorb® 563 Adsorbent	V2,116
			Xerox Corp.	2-PHASE™ EXTRACTION Process	V1,180
		Portable Gas Chromatographs	Bruker Analytical Systems, Inc.	Mobile Environmental Monitor	V3,20
			HNU Systems, Inc.	HNU GC 311D Portable Gas Chromatograph	V3,42
			Microsensor Systems, Incorporated	MSI-301A Vapor Monitor	V3,50
			Hewlitt-Packard Company	Portable Gas Analyzer	V3,40
			Photovac Monitoring Instruments	PE Photovac Voyager Portable Gas Chromatograph	V3,56
			Sentex Sensing Technology, Inc.	Scentograph Plus II Portable Gas Chromatograph	V3,60
			SRI Instruments	Compact Gas Chromatograph	V3,66
		Spectrometers	Environmental Technologies Group, Inc.	AirSentry Fourier Transform Infrared Spectrometer	V3,28
			Graseby Ionics, Ltd., and PCP, Inc.	Ion Mobility Spectrometry	V3,36
			XonTech, Inc.	XonTech Sector Sampler	V3,84
		Thermal Destruction	Sonotech, Inc.	Frequency-Tunable Pulse Combustion System	V1,154

APPLICABILITY INDEX (continued)

Media	Contaminants	Treatment Type	Technology Vendor	Technology	Volume, Page Number
Gas	Aromatic VOCs	Biological Degradation	Media & Process Technology	Bioscrubber	V2,78
			Remediation Technologies, Inc.	Biofilm Reactor for Chlorinated Gas Treatment	V2,94
		Materials Handling	U.S. EPA	Excavation Techniques and Foam Suppression Methods	V1,166
		Physical/ Chemical Treatment	ARS Technologies, Inc.	Pneumatic Fracturing Extraction™ and Catalytic Oxidation	V1,24
			Energia, Inc.	Reductive Thermal and Photo-Thermal Oxidation Processes for Enhanced Conversion of Chlorocarbons	V2,122
			KSE, Inc.	Adsorption-Integrated-Reaction process	V1,200/ V2,24
			Matrix Photocatalytic Inc.	Photocatalytic Air Treatment	V1,206
			Membrane Technology and Research, Inc.	VaporSep® Membrane Process	V2,80
			Xerox Corp.	2-PHASE™ EXTRACTION Process	V1,180
		Portable Gas Chromatographs	Bruker Analytical Systems, Inc.	Mobile Environmental Monitor	V3,20
			HNU Systems, Inc.	HNU GC 311D Portable Gas Chromatograph	V3,42
			Microsensor Systems, Incorporated	MSI-301A Vapor Monitor	V3,50
			Hewlitt-Packard Company	Portable Gas Analyzer	V3,40
			Photovac Monitoring Instruments	PE Photovac Voyager Portable Gas Chromatograph	V3,56
			Sentex Sensing Technology, Inc.	Scentograph Plus II Portable Gas Chromatograph	V3,60
			SRI Instruments	Compact Gas Chromatograph	V3,66
		Spectrometers	Graseby Ionics, Ltd.	Ion Mobility Spectrometry	V3,36
			XonTech, Inc.	XonTech Sector Sampler	V3,84
		Thermal Destruction	Sonotech, Inc.	Frequency-Turnable Pulse Combustion System	V1,154
			U. of Dayton Research Institute	Photothermal Detoxification Unit	V2,106
	Dioxins	Materials Handling	U.S. EPA	Excavation Techniques and Foam Suppression Methods	V1,166
		Physical/ Chemical Treatment	Matrix Photocatalytic Inc.	Photocatalytic Air Treatment	V1,206
		Portable Gas Chromatographs	Bruker Analytical Systems, Inc.	Mobile Environmental Monitor	V3,20
		Spectrometers	Graseby Ionics, Ltd., and PCP, Inc.	Ion Mobility Spectrometry	V3,36
		Thermal Destruction	Energy and Environmental Research Corp.	Reactor Filter System	V2,42

APPLICABILITY INDEX (continued)

Media	Contaminants	Treatment Type	Technology Vendor	Technology	Volume, Page Number
Gas (continued)	Dioxins (continued)	Thermal Destruction (continued)	U. of Dayton Research Institute	Photothermal Detoxification Unit	V2,106
	Furans	Materials Handling	U.S. EPA	Excavation Techniques and Foam Suppression Methods	V1,166
		Physical/ Chemical Treatment	Matrix Photocatalytic Inc.	Photocatalytic Air Treatment	V1,206
		Portable Gas Chromatographs	Bruker Analytical Systems, Inc.	Mobile Environmental Monitor	V3,20
		Spectrometers	Graseby Ionics, Ltd., and PCP, Inc.	Ion Mobility Spectrometry	V3,36
		Thermal Destruction	Energy and Environmental Research Corp.	Reactor Filter System	V2,42
	Halogenated VOCs	Biological Degradation	U. of Dayton Research Institute	Photothermal Detoxification Unit	V2,106
			Remediation Technologies, Inc.	Biofilm Reactor for Chlorinated Gas Treatment	V2,94
		Materials Handling	U.S. EPA	Excavation Techniques and Foam Suppression Methods	V1,166
		Physical/ Chemical Thermal Desorption	Process Technologies, Inc.	Photolytic Destruction of Vapor-Phase Halogens	V1,218
		Physical/ Chemical Treatment	ARS Technologies, Inc.	Pneumatic Fracturing Extraction™ and Catalytic Oxidation	V1,24
			Arizona State U./ Zentox Corp.	Photocatalytic Oxidation with Air Stripping	V2,18
			Energia, Inc.	Reductive Photo-Dechlorination Treatment	V2,38
			Energia, Inc.	Reductive Thermal and Photo-Thermal Oxidation process for Enhanced Conversion of Chlorocarbons	V2,122
			KSE, Inc.	Adsorption-Integrated-Reaction Process	V1,200/ V2,24
			Matrix Photocatalytic Inc.	Photocatalytic Air Treatment	V1,206
			Membrane Technology and Research, Inc.	VaporSep® Membrane Process	V2,80
			Thermatrix, Inc.	Photolytic Oxidation Process	V2,102
			Roy F. Weston, Inc.	Ambersorb® 563 Adsorbent	V2,116
			Xerox Corp.	2-PHASE™ EXTRACTION Process	V1,180
		Portable Gas Chromatographs	Bruker Analytical Systems, Inc.	Mobile Environmental Monitor	V3,20
			Photovac Monitoring Instruments	PE Photovac Voyager Portable Gas Chromatograph	V3,56
			Sentex Sensing Technology, Inc.	Scentograph Plus II Portable Gas Chromatograph	V3,60
			SRI Instruments	Compact Gas Chromatograph	V3,66
		Spectrometers	Graseby Ionics, Ltd., and PCP, Inc.	Ion Mobility Spectrometry	V3,36

APPLICABILITY INDEX (continued)

Media	Contaminants	Treatment Type	Technology Vendor	Technology	Volume, Page Number
Gas (continued)	Halogenated VOCs (continued)	Spectrometers (continued)	XonTech, Inc.	XonTech Sector Sampler	V3,84
		Thermal Destruction	U. of Dayton Research Institute	Photothermal Detoxification Unit	V2,106
	Heavy Metals	Portable Gas Chromatographs	Bruker Analytical Systems, Inc.	Mobile Environmental Monitor	V3,20
	Herbicides	Materials Handling	U.S. EPA	Excavation Techniques and Foam Suppression Methods	V1,166
		Physical/ Chemical Treatment	Matrix Photocatalytic Inc.	Photocatalytic Air Treatment	V1,206
		Portable Gas Chromatographs	Bruker Analytical Systems, Inc.	Mobile Environmental Monitor	V3,20
		Spectrometers	Graseby Ionics, Ltd., and PCP, Inc.	Ion Mobility Spectrometry	V3,36
		Thermal Destruction	U. of Dayton Research Institute	Photothermal Detoxification Unit	V2,106
	Metals	Materials Handling	U.S. EPA	Excavation Techniques and Foam Suppression Methods	V1,166
		Physical/ Chemical Treatment	General Atomics, Nuclear Remediation Technologies Div.	Acoustic Barrier Particulate Separator	V2,48
			Matrix Photocatalytic Inc.	Photocatalytic Air Treatment	V1,206
		Portable Gas Chromatographs	HNU Systems, Inc.	HNU GC 311D Portable Gas Chromatograph	V3,42
			Microsensor Systems, Incorporated	MSI-301A Vapor Monitor	V3,50
			Hewlitt-Packard Company	Portable Gas Analyzer	V3,40
		Thermal Destruction	American Combustion, Inc.	PYRETRON® Thermal Destruction	V1,22
			Energy and Environmental Research Corp.	Reactor Filter System	V2,42
	PAHs	Portable Gas Chromatographs	Bruker Analytical Systems, Inc.	Mobile Environmental Monitor	V3,20
			SRI Instruments	Compact Gas Chromatograph	V3,66
	PCBs	Materials Handling	U.S. EPA	Excavation Techniques and Foam Suppression Methods	V1,166
		Physical/ Chemical Treatment	Matrix Photocatalytic, Inc.	Photocatalytic Air Treatment	V1,206
		Portable Gas Chromatographs	Bruker Analytical Systems, Inc.	Mobile Environmental Monitor	V3,20
			HNU Systems, Inc.	HNU GC 311D Portable Gas Chromatograph	V3,42
			Microsensor Systems, Incorporated	MSI-301A Vapor Monitor	V3,50
			Hewlitt-Packard Company	Portable Gas Analyzer	V3,40

APPLICABILITY INDEX (continued)

Media	Contaminants	Treatment Type	Technology Vendor	Technology	Volume, Page Number
Gas (contnued)	PCBs (continued)	Portable Gas Chromatographs (continued)	Sentex Sensing Technology, Inc.	Scentograph Plus II Portable Gas Chromatograph	V3,60
			SRI Instruments	Compact Gas Chromatograph	V3,66
		Spectrometers	Graseby Ionics, Ltd., and PCP, Inc.	Ion Mobility Spectrometry	V3,36
		Thermal Destruction	U. of Dayton Research Institute	Photothermal Detoxification Unit	V2,106
	Pesticides	Material Handling	U.S. EPA	Excavation Techniques and Foam Suppression Methods	V1,166
		Physical/ Chemical Treatment	Matrix Photocatalytic, Inc.	Photocatalytic Air Treatment	V1,206
		Portable Gas Chromatographs	Bruker Analytical Systems, Inc.	Mobile Environmental Monitor	V3,20
			Sentex Sensing Technology, Inc.	Scentograph Plus II Portable Gas Chromatograph	V3,60
			SRI Instruments	Compact Gas Chromatograph	V3,66
		Spectrometers	Graseby Ionics, Ltd., and PCP, Inc.	Ion Mobility Spectrometry	V3,36
	Petroleum Hydrocarbons	Thermal Destruction	U. of Dayton Research Institute	Photothermal Detoxification Unit	V2,106
		Portable Gas Chromatograph	SRI Instruments	Compact Gas Chromatograph	V3,66
	SVOCs	Material Handling	U.S. EPA	Excavation Techniques and Foam Suppression Methods	V1,166
		Physical/ Chemical Thermal Desorption	Process Technologies, Inc.	Photolytic Destruction of Vapor-Phase Halogens	V1,218
		Physical/ Chemical Treatment	ARS Technologies, Inc.	Pneumatic Fracturing Extraction™ and Catalytic Oxidation	V1,24
			Energia, Inc.	Reductive Thermal and Photo-Thermal Oxidation Processes for Enhanced Conversion of Chlorocarbons	V2,122
			Xerox Corp.	2-PHASE™ EXTRACTION Process	V1,180
		Portable Gas Chromatographs	Bruker Analytical Systems, Inc.	Mobile Environmental Monitor	V3,20
		Spectrometers	Graseby Ionics, Ltd., and PCP, Inc.	Ion Mobility Spectrometry	V3,36
			XonTech, Inc.	XonTech Sector Sampler	V3,84
		Thermal Destruction	Sonotech, Inc.	Frequency-Turnable Pulse Combustion System	V1,154
			U. of Dayton Research Institute	Photothermal Detoxification Unit	V2,106
	VOCs	Biological Degradation	Media & Process Technology	Bioscrubber	V2,78
		Materials Handling	U.S. EPA	Excavation Techniques and Foam Suppression Methods	V1,166
		Physical/ Chemical Thermal Desorption	Process Technologies, Inc.	Photolytic Destruction of Vapor-Phase Halogens	V1,218

APPLICABILITY INDEX (continued)

Media	Contaminants	Treatment Type	Technology Vendor	Technology	Volume, Page Number
Gas (continued)	VOCs (continued)	Physical/ Chemical Treatment	ARS Technologies, Inc.	Pneumatic Fracturing Extraction™ and Catalytic Oxidation	V1,24
			Arizona State U/ Zentox Corp.	Photocatalytic Oxidation with Air Stripping	V2,18
			Energia, Inc.	Reductive Photo-Dechlorination Treatment	V2,38
			Energia, Inc.	Reductive Thermal and Photo-Thermal Oxidation Processes for Enhanced Conversion of Chlorocarbons	V2,122
			KSE, Inc.	Adsorption-Integrated-Reaction Process	V1,200/ V2,24
			Matrix Photocatalytic Inc.	Photocatalytic Air Treatment	V1,206
			Membrane Technology and Research, Inc.	VaporSep® membrane Process	V2,80
			Thermatrix, Inc.	Photolytic Oxidation Process	V2,102
			Roy F. Weston, Inc.	Ambersorb® 563 Adsorbent	V2,116
			Xerox Corp.	2-PHASE™ EXTRACTION Process	V1,180
		Portable Gas Chromatographs	Bruker Analytical Systems, Inc.	Mobile Environmental Monitor	V3,20
			HNU Systems, Inc.,	HNU GC 311D Portable Gas Chromatograph	V3,42
			Microsensor Systems, Incorporated	MSI-301A Vapor Monitor	V3,50
			Hewlitt-Packard Company	Portable Gas Analyzer	V3,40
			Photovac Monitoring Instruments	PE Photovac Voyager Portable Gas Chromatograph	V3,56
			Sentex Sensing Technology, Inc.	Scentograph Plus II Portable Gas Chromatograph	V3,60
			SRI Instruments	Compact Gas Chromatograph	V3,66
		Spectrometers	Environmental Technologies Group, Inc.	AirSentry Fourier Transform Infrared Spectrometer	V3,28
			Graseby Ionics, Ltd., and PCP, Inc.	Ion Mobility Spectrometry	V3,36
			XonTech, Inc.	XonTech Sector Sampler	V3,84
		Thermal Destruction	Sonotech, Inc.	Frequency-Turnable Pulse Combustion System	V1,154
Ground water	Aromatic VOCs	Biological Degradation	Harding Lawson Associates	Two-Zone, Plume Interception, In Situ Treatment Technology	V2,48
			Billings and Associates, Inc.	Subsurface Volatilization and Ventilation Systems (SVVS®)	V1,30
			Bio-Rem, Inc.	Augmented in Situ Subsurface Bioremediation Process	V1,34
			Biotrol®	Biological Aqueous Treatment System	V1,38

APPLICABILITY INDEX (continued)

Media	Contaminants	Treatment Type	Technology Vendor	Technology	Volume, Page Number
Ground water (continued)	Aromatic VOCs (continued)	Biological Degradation (continued)	Electrokinetics, Inc.	In Situ Bioremediation by Electrokinetic Injection	V2,120
			New York State Department of Environmental Conservation/R.E. Wright Environmental Inc.	In Situ Bioventing Treatment System	V1,130
			IT Corp.	Oxygen Microbubble In Situ Bioremediation	V2,126
			ZENON Environmental Inc.	ZenoGem™ Process	V1,184
		Contaminant Survey Systems	W.L. Gore and Associates, Inc.	GORE-SORBER Screening Survey	V3,82
		Materials Handling	National Risk Management Research Laboratory, The U. of Cincinnati, and FRX, Inc.	Hydraulic Fracturing	V1,124
		Physical/ Chemical Thermal Desorption	Hughes Environmental Systems, Inc.	Steam Enhanced Recovery Process	V1,100
			NOVATERRA, Inc.	In Situ Soil Treatments (Steam/Air Stripping)	V1,134
			Rochem Separation Systems, Inc.	Rochem Disc Tube™ Module System	V1,142
			SoilTech ATP Systems, Inc.	Anaerobic Thermal Processor	V1,150
		Physical/ Chemical Treatment	ARS Technologies, Inc.	Pneumatic Fracturing Extraction™ and Catalytic Oxidation	V1,24
			CF Systems Corp.	Liquified Gas Solvent Extraction (LG-SX) Technology	V1,48
			High Voltage Environmental Applications, Inc.	High Energy Electron Beam Irradiation	V2,54
			High Voltage Environmental Applications, Inc.	High Energy Electron Irradiation	V1,94
			KSE, Inc.	Adsorption-Integrated-Reaction Process	V1,200/ V2,24
			Matrix Photocatalytic Inc.	Photocatalytic Water Treatment	V1,110
			Pulse Sciences, Inc.	X-ray Treatment of Aqueous Solutions	V2,90
			SBP Technologies, Inc.	Membrane Filtration and Bioremediation	V1,144
			Terra Vac, Inc.	In Situ and Ex Situ Vacuum Extraction	V1,160
			U. of Nebraska - Lincoln	Center Pivot Spray Irrigation System	V1,170
			Roy F. Weston, Inc./IEG Technologies	UVB - Vacuum Vaporizing Well	V1,176

APPLICABILITY INDEX (continued)

Media	Contaminants	Treatment Type	Technology Vendor	Technology	Volume, Page Number
Ground water (continued)	Aromatic VOCs (continued)	Physical/Chemical Treatment (continued)	Xerox Corp.	2-PHASE™ EXTRACTION Process	V1,180
			ZENON Environmental Inc.	Cross-Flow Pervaporation System	V1,182
		Portable Gas Chromatographs	Analytical and Remedial Technology, Inc.	Automated Sampling and Analytical Platform	V3,14
			Bruker Analytical Systems, Inc.	Mobile Environmental Monitor	V3,20
			HNU Systems, Inc.,	HNU GC 311D Portable Gas Chromatograph	V3,42
			Hewlitt-Packard Company	Portable Gas Analyzer	V3,40
			Photovac Monitoring Instruments	PE Photovac Voyager Portable Gas Chromatograph	V3,56
			Sentex Sensing Technology, Inc.	Scentograph Plus II Portable Gas Chromatograph	V3,60
			SRI Instruments	Compact Gas Chromatograph	V3,66
			U.S. EPA	Field Analytical Screening Program - PCB Method	V3,78
		Solidification/ Stabilization	Wheelabrator Clean Air Systems, Inc.	PO*WW*ER™ Technology	V1,178
		Spectrometers	Graseby Ionics, Ltd., and PCP, Inc.	Ion Mobility Spectrometry	V3,36
		Test Kits	Hanby Environmental Laboratory Procedure, Inc.	Test Kits for Organic Contaminants in Soil and Water	V3,38
		Thermal Destruction	Texaco Inc.	Texaco Gasification Process	V1,162
			U. of Dayton Research Institute	Photothermal Detoxification Unit	V2,106
	Cyanide	Biological Degradation	Pintail Systems, Inc.	Spent ore Bioremediation process	V1,214
	Diesel	Materials Handling	National Risk Management Research Laboratory, The U. of Cincinnati, and FRX, Inc.	Hydraulic Fracturing	V1,124
		Physical/ Chemical Thermal Desorption	Geokinetics International, Inc.	Electroheat-Enhanced Nonaqueous Phase Liquids Removal	V1,196
			SIVE Services	Steam Injection and Vacuum Extraction	V1,230
	Dioxins	Physical/ Chemical Thermal Desorption	ELI Eco Logic Inc.	GAS-Phase Chemical Reduction Process	V1,68
			SoilTech ATP Systems, Inc.	Anaerobic Thermal Processor	V1,150
		Physical/ Chemical Treatment	CF Systems Corp.	Liquified Gas Solvent Extraction (LG-SX) Technology	V1,48
			High Voltage Environmental Applications, Inc.	High-Energy Electron Irradiation	V1,94

APPLICABILITY INDEX (continued)

Media	Contaminants	Treatment Type	Technology Vendor	Technology	Volume, Page Number
Ground water (continued)	Dioxins (continued)	Physical/Chemical Treatment (continued)	Matrix Photocatalytic Inc.	Photocatalytic Water Treatment	V1,110
			SBP Technologies, Inc.	Membrane Filtration and Bioremediation	V1,144
		Portable Gas Chromatographs	Bruker Analytical Systems, Inc.	Mobile Environmental Monitor	V3,20
		Solidification/ Stabilization	Wheelabrator Clean Air Systems, Inc.	PO*WW*ER™ Technology	V1,178
		Spectrometers	Graseby Ionics, Ltd., and PCP, Inc.	Ion Mobility Spectrometry	V3,36
		Test Kits	Strategic Diagnostic, Inc. Corp.	RaPID Assay®	V3,72
		Thermal Destruction	BWX Technologies, Inc.	Cyclone Furnace	V1,44
			U. of Dayton Research Institute	Photothermal Detoxification Unit	V2,106
	Explosives	Contaminant Survey Systems	W.L. Gore and Associates, Inc.	GORE-SORBER Screening Survey	V3,82
		Physical/ Chemical Thermal Desorption	New Jersey Institute of Technology	GHEA Associates Process	V2,86
		Physical/ Chemical Treatment	U.S. Filter/WTS Ultrox	Ultraviolet Radiation and Oxidation	V1,168
	Furans	Physical/ Chemical Thermal Desorption	Eli Eco Logic Inc.	Gas-Phase Chemical Reduction Process	V1,68
			SoilTech ATP Systems, Inc.	Anaerobic Thermal Processor	V1,150
		Physical/ Chemical Treatment	CF Systems Corp.	Liquified Gas Solvent Extraction (LG-SX) Technology	V1,48
			High Voltage Environmental Applications, Inc.	High-Energy Electron Irradiation	V1,94
			Matrix Photocatalytic Inc.	Photocatalytic Water Treatment	V1,110
			SBP Technologies, Inc.	Membrane Filtration and Bioremediation	V1,144
		Portable Gas Chromatographs	Bruker Analytical Systems, Inc.	Mobile Environmental Monitor	V3,20
		Solidification/ Stabilization	Wheelabrator Clean Air Systems, Inc.	PO*WW*ER™ Technology	V1,178
		Spectrometers	Graseby Ionics, Ltd., and PCP, Inc.	Ion Mobility Spectrometry	V3,36
		Test Kits	Strategic Diagnostic, Inc. Corp.	RaPID Assay®	V3,72
		Thermal Destruction	BWX Technologies, Inc.	Cyclone Furnace	V1,44
			U. of Dayton Research Institute	Photothermal Detoxification Unit	V2,106
	Gasoline	Contaminant Survey Systems	W.L. Gore and Associates, Inc.	GORE-SORBER Screening Survey	V3,82

APPLICABILITY INDEX (continued)

Media	Contaminants	Treatment Type	Technology Vendor	Technology	Volume, Page Number
Ground water (continued)	Gasoline (continued)	Materials Handling	National Risk Management Research Laboratory, The U. of Cincinnati, and FRX, Inc.	Hydraulic Fracturing	V1,124
		Physical/ Chemical Thermal Desorption	SIVE Services	Steam Injection and Vacuum Extraction	V1,230
	Halogenated VOCs	Biological Degradation	ABB Environmental Services, Inc.	Anaerobic-Aerobic Sequential Bioremediation of PCE	V2,50
			Harding Lawson Associates	Two-Zone, Plume Interception, Inc Situ Treatment Technology	V2,48
			Bio-Rem, Inc.	Augmented in Situ Subsurface Bioremediation Process	V1,34
			Biotrol®, Inc.	Methanotrophic Bioreactor System	V2,28
			Electrokinetics, Inc.	In Situ Bioremediation by Electrokinetic Injection	V2,120
			New York State Department of Environmental Conservation/R.E. Wright Environmental Inc.	In Situ Bioventing Treatment System	V1,130
			IT Corp.	Oxygen Microbubble In Situ Bioremediation	V2,126
			U.S. Air Force	Phytoremediation of TCE-Contaminated Shallow Groundwater	V1,234
			ZENON Environmental Inc.	ZenoGem™ Process	V1,184
		Contaminant Survey Systems	W.L. Gore and Associates, Inc.	GORE-SORBER Screening Survey	V3,82
		Materials Handling	National Risk Management Research Laboratory, The U. of Cincinnati, and FRX, Inc.	Hydraulic Fracturing	V1,124
		Physical Chemical Treatment - Biological Degradation	Lasagna™ Public-Private Partnership	Lasagna™ In Situ Soil Remediation	V1,202
		Physical/ Chemical Thermal Desorption	Hughes Environmental Systems, Inc.	Steam Enhanced Recovery Process	V1,100
			KAI Technologies, Inc./Brown and Root Environmental	Radio Frequency Heating	V1,106
			New Jersey Institute of Technology	GHEA Associates Process	V2,86
			NOVATERRA, Inc.	In Situ Soil Treatments (Steam/Air Stripping)	V1,134
			SoilTech ATP Systems, Inc.	Anaerobic Thermal Processor	V1,150

APPLICABILITY INDEX (continued)

Media	Contaminants	Treatment Type	Technology Vendor	Technology	Volume, Page Number
Ground water (continued)	Halogenated VOCs (continued)	Physical/ Chemical Treatment	ARS Technologies, Inc.	Pneumatic Fracturing Extraction™ and Catalytic Oxidation	V1,24
			Arizona State U./ Zentox Corp.	Photocatalytic Oxidation with Air Stripping	V2,18
			CF Systems Corp.	Liquified Gas Solvent Extraction (LG-SX) Technology	V1,48
			EnviroMetal Technologies, Inc.	In Situ and Ex Situ Metal Enhanced Abiotic Degradation of Dissolved Halogenated Organic Compounds in Groundwater	V1,72
			High Voltage Environmental Applications, Inc.	High Energy Electron Beam Irradiation	V2,54
			High Voltage Environmental Applications, Inc.	High Energy Electron Irradiation	V1,94
			KSE, Inc.	Adsorption-Integrated-Reaction Process	V1,200/ V2,24
			Matrix Photocatalytic Inc.	Photocatalytic Water Treatment	V1,110
			Pulse Sciences, Inc.	X-ray Treatment of Aqueous Solutions	V2,90
			SBP Technologies, Inc.	Membrane Filtration and Bioremediation	V1,144
			Terra Vac, Inc.	In Situ and Ex Situ Vacuum Extraction	V1,160
			U.S. Filter/WTS Ultrox	Ultraviolet Radiation and Oxidation	V1,168
			U. of Nebraska - Lincoln	Center Pivot Spray Irrigation System	V1,170
			UV Technologies, Inc.	PhotoCAT™ Process	V2,112
			Roy F. Weston, Inc.	Ambersorb® 563 Adsorbent	V2,116
			Roy F. Weston, Inc./IEG Technologies	UVB - Vacuum Vaporizing Well	V1,176
			Xerox Corp.	2-PHASE™ EXTRACTION Process	V1,180
			ZENON Environmental Inc.	Cross-Flow Pervaporation System	V1,182
		Portable Gas Chromatographs	Analytical and Remedial Technology, Inc.	Automated Sampling and Analytical Platform	V3,14
			Bruker Analytical Systems, Inc.	Mobile Environmental Monitor	V3,20
			Photovac Monitoring Instruments	PE Photovac Voyager Portable Gas Chromatograph	V3,56
			Sentex Sensing Technology, Inc.	Scentograph Plus II Portable Gas Chromatograph	V3,60
			SRI Instruments	Compact Gas Chromatograph	V3,66
			U.S. EPA	Field Analytical Screening Program - PCB Method	V3,78
		Solidification/ Stabilization	Wheelabrator Clean Air Systems, Inc.	PO*WW*ER™ Technology	V1,178

APPLICABILITY INDEX (continued)

Media	Contaminants	Treatment Type	Technology Vendor	Technology	Volume, Page Number
Ground water (continued)	Halogenated VOCs (continued)	Spectrometers	Graseby Ionics, Ltd., and PCP, Inc.	Ion Mobility Spectrometry	V3,36
		Test Kits	Strategic Diagnostic, Inc. Corp.	RaPID Assay®	V3,72
		Thermal Destruction	Texaco Inc.	Texaco Gasification Process	V1,162
			U. of Dayton Research Institute	Photothermal Detoxification Unit	V2,106
	Heavy Metals	Portable Gas Chromatographs	Bruker Analytical Systems, Inc.	Mobile Environmental Monitor	V3,20
	Herbicides	Biological Degradation	Biotrol®	Biological Aqueous Treatment System	V1,38
			Electrokinetics, Inc.	In Situ Bioremediation by Electrokinetic Injection	V2,120
			Phytokinetics, Inc.	Phytoremediation of Contaminated Soils	V2,128
			ZENON Environmental Inc.	ZenoGem™ Process	V1,184
		Physical Chemical Treatment - Biological Degradation	Lasagna™ Public-Private Partnership	Lasagna™ in Situ Soil Remediation	V1,202
		Physical/ Chemical Thermal Desorption	ELI Eco Logic Inc.	Gas-Phase Chemical Reduction Process	V1,68
			SoilTech ATP Systems, Inc.	Anaerobic Thermal Processor	V1,150
		Physical/ Chemical Treatment	CF Systems Corp.	Liquified Gas Solvent Extraction (LG-SX) Technology	V1,48
			High Voltage Environmental Applications, Inc.	High Energy Electron Irradiation	V1,94
			Matrix Photocatalytic Inc.	Photocatalytic Water Treatment	V1,110
			SBP Technologies, Inc.	Membrane Filtration and Bioremediation	V1,144
		Portable Gas Chromatographs	Bruker Analytical Systems, Inc.	Mobile Environmental Monitor	V3,20
		Solidification/ Stabilization	Wheelabrator Clean Air Systems, Inc.	PO*WW*ER™ Technology	V1,178
		Spectrometers	Graseby Ionics, Ltd., and PCP, Inc.	Ion Mobility Spectrometry	V3,36
		Test Kits	Strategic Diagnostic, Inc.	RaPID Assay®	V3,72
		Thermal Destruction	BWX Technologies, Inc.	Cyclone Furnace	V1,44
			U. of Dayton Research Institute	Photothermal Detoxification Unit	V2,106
	Mercury	Contaminant Survey systems	Quadrel Srvices, Inc.	Emflux® Soil-Gas Survey System	V3,54
	Metals	Biological Degradation	Colorado Dept. of Public Health and Environment	Constructed Wetlands-Based Treatment	V1,54

APPLICABILITY INDEX (continued)

Media	Contaminants	Treatment Type	Technology Vendor	Technology	Volume, Page Number
Ground water (continued)	Metals (continued)	Biological Degradation (continued)	Pintail Systems, Inc.	Biomineralization of Metals	V2,130
			Pintail Systems, Inc.	Spent Ore Bioremediation Process	V1,214
			Resource Management & Recovery	AlgaSORB® Biological Sorption	V2,96
		Field Portable X-ray Fluorescence	Metorex, Inc.	Field Portable X-ray Fluorescence Analysis	V3,48
		Physical Chemical Treatment - Biological Degradation	Lasagna™ Public-Private Partnership	Lasagna™ In Situ Soil Remediation	V1,202
		Physical/ Chemical Radioactive Waste Treatment	Filter Flow Technology, Inc.	Colloid Polishing Filter Method®	V1,76
		Physical/ Chemical Thermal Desorption	New Jersey Institute of Technology	GHEA Associates Process	V2,86
			Rochem Separation Systems, Inc.	Rochem Disc Tube™ Module System	V1,142
		Physical/ Chemical Treatment	Atomic Energy of Canada, Limited	Chemical Treatment and Ultrafiltration	V2,22
			E.I. DuPont de Nemours and Co. and Oberlin Filter Co.	Membrane Microfiltration	V1,60
			Dynaphore, inc.	FORAGER® Sponge	V1,62
			EnviroMetal Technologies, Inc.	Reactive Barrier	V1,194
			EPOC Water, Inc.	Precipitation, Microfiltration, and Sludge Dewatering	V1,74
			Cure International, Inc.	CURE® Electrocoagulation Wastewater Treatment System	V1,58
			Lewis Environmental Services, Inc./ Hickson Corp.	Chromated Copper Arsenate Soil Leaching Process	V2,76
			Matrix Photocatalytic Inc.	Photocatalytic Water Treatment	V1,110
			Morrison Knudsen Corp./Spetstamponazhgeologia Enterprises/STG Technologies	Clay-Base Grouting Technology	V1,114
			RECRA Environmental, Inc.	Alternating Current Electrocoagulation Technology	V2,92
			Selentec Environmental Technologies, Inc.	Selentec MAG*SEP Technology	V1,226
			U. of Washington	Adsorptive Filtration	V2,110
			U. of Wisconsin - Madison	Photoelectrocatalytic Degradation and Removal	V2,138
		Portable Gas Chromatographs	HNU Systems, Inc.	HNU GC 311D Portable Gas Chromatograph	V3,42
			Hewlitt-Packard Company	Portable Gas Analyzer	V3,40

APPLICABILITY INDEX (continued)

Media	Contaminants	Treatment Type	Technology Vendor	Technology	Volume, Page Number
Ground water (continued)	Metals (continued)	Solidification/ Stabilization	Wheelabrator Clean Air Systems, Inc.	PO*WW*ER™ Technology	V1,178
		Thermal Destruction	BWX Technologies, Inc.	Cyclone Furnace	V1,44
	Organics	Physical/Chemical Treatment	Duke Engineering and Services, Inc.	Surfactant Enhanced Aquifer Remediation of Nonaqueous Phase Liquids	V1,192
	PAHs	Contaminant Survey Systems	W.L. Gore and Associates, Inc.	GORE-SORBER Screening Survey	V3,82
		Physical/ Chemical Thermal Desorption	Geokinetics International, Inc.	Electroheat-Enhanced Nonaqueous Phase Liquids Removal	V1,196
			SBP Technologies, Inc.	Membrane Filtration and Bioremediation	V1,144
		Portable Gas Chromatographs	Bruker Analytical Systems, Inc.	Mobile Environmental Monitor	V3,20
			SRI Instruments	Compact Gas Chromatograph	V3,66
	PCBs	Biological Degradation	Institute of Gas Technology	Chemical and Biological Treatment	V2,56
			Phytokinetics, Inc.	Phytoremediation of Contaminated Soils	V2,128
			Phytokinetics, Inc.	Phytoremediation Process	V1,210
			ZENON Environmental Inc.	ZenoGem™ Process	V1,184
		Field Portable X-ray Fluorescence	Metorex, Inc.	Field portable X-ray Fluorescence Analysis	V3,48
		Physical/ Chemical Thermal Desorption	ELI Eco Logic Inc.	Gas-Phase Chemical Reduction Process	V1,68
			KAI Technologies, Inc./Brown and Root Environmental	Radio Frequency Heating	V1,106
			New Jersey Institute of Technology	GHEA Associates Process	V2,86
			SoilTech ATP Systems, Inc.	Anaerobic Thermal Processor	V1,150
		Physical/ Chemical Treatment	Calgon Carbon Oxidation Technologies	perox-pure™ Chemical Oxidation Technology	V1,46
			CF Systems Corp.	Liquified Gas Solvent Extraction (LG-SX) Technology	V1,48
			High Voltage Environmental Applications, Inc.	High-Energy Electron Beam Irradiation	V2,54
			High Voltage Environmental Applications, Inc.	High-Energy Electron Irradiation	V1,94
			Matrix Photocatalytic Inc.	Photocatalytic Water Treatment	V1,110
			Morrison Knudsen Corp./Spetstamponazhgeologia Enterprises/STG Technologies	Clay-Base Grouting Technology	V1,114

APPLICABILITY INDEX (continued)

Media	Contaminants	Treatment Type	Technology Vendor	Technology	Volume, Page Number
Ground water (continued)	PCBs (continued)	Physical/Chemical Treatment (continued)	SBP Technologies, Inc.	Membrane Filtration and Bioremediation	V1,144
			U.S. Filter/WTS Ultrox	Ultraviolet Radiation and Oxidations	V1,168
			U. of Wisconsin - Madison	Photoelectrocatalytic Degradation and Removal	V2,138
		Portable Gas Chromatographs	Bruker Analytical Systems, Inc.	Mobile Environmental Monitor	V3,20
			HNU Systems, Inc.	HNU GC 311D Portable Gas Chromatograph	V3,42
			Hewlitt-Packard Company	Portable Gas Analyzer	V3,40
			Sentex Sensing Technology, inc.	Scentograph Plus II Portable Gas Chromatograph	V3,60
			SRI Instruments	Compact Gas Chromatograph	V3,66
			U.S. EPA	Field Analytical Screening Program - PCB Method	V3,78
		Solidification/ Stabilization	Wheelabrator Clean Air Systems, Inc.	PO*WW*ER™ Technology	V1,178
		Spectrometers	Graseby Ionics, Ltd., and PCP, Inc.	Ion Mobility Spectrometry	V3,36
		Test Kits	Hanby Environmental Laboratory Procedures, Inc.	Test Kits for Organic Contaminants in Soil and Water	V3,38
		Thermal Destruction	BWX Technologies, Inc.	Cyclone Furnace	V1,44
			U. of Dayton Research Institute	Photothermal Detoxification Unit	V2,106
	PCP	Physical/ Chemical Treatment	SBP Technologies, Inc.	Membrane Filtration and Bioremediation	V1,144
			U.S. Filter/WTS Ultrox	Ultraviolet Radiation and Oxidation	V1,168
		Portable Gas Chromatographs	U.S. EPA	Field Analytical Screening Program - PCP Method	V3,80
		Test Kits	Strategic Diagnostic, Inc.	Ensys Penta Test System	V3,68
			Strategic Diagnostic, Inc. Corp.	RaPID Assay®	V3,72
	Pesticides	Biological Degradation	Biotrol®	Biological Aqueous Treatment System	V1,38
			Electrokinetics, Inc.	In Situ Bioremediation by Electrokinetic Injections	V2,120
			Institute of Gas Technology	Chemical and Biological Treatment	V2,56
			Phytokinetics, Inc.	Phytoremediation of Contaminated Soils	V2,128
			Phytokinetics, Inc.	Phytoremediation Process	V1,210
			ZENON Environmental Inc.	ZenoGem™ Process	V1,184
		Contaminant Survey Systems	W.L. Gore and Associates, Inc.	GORE-SORBER Screening Survey	V3,82

APPLICABILITY INDEX (continued)

Media	Contaminants	Treatment Type	Technology Vendor	Technology	Volume, Page Number
Ground water (continued)	Pesticides (continued)	Physical/ Chemical Thermal Desorption	ELI Eco Logic Inc.	Gas-Phase Chemical Reduction Process	V1,68
			KAI Technologies, Inc./Brown and Root Environmental	Radio Frequency heating	V1,106
			SoilTech ATP Systems, Inc.	Anaerobic Thermal Process	V1,150
		Physical/ Chemical Treatment	Calgon Carbon Oxidation Technologies	perox-pure™ Chemical Oxidation Technology	V1,46
			CF Systems Corp.	Liquified Gas Solvent Extraction (LG-SX) Technology	V1,48
			High Voltage Environmental Applications, Inc.	High-Energy Electron Beam Irradiation	V2,54
			High Voltage Environmental Applications, Inc.	High-Energy Electron Irradiation	V1,94
			Matrix Photocatalytic Inc.	Photocatalytic Water Treatment	V1,110
			Morrison Knudsen Corp./Spetstamponazhgeologia Enterprises/STG Technologies	Clay-Base Grouting Technology	V1,114
			SBP Technologies, Inc.	Membrane Filtration and Bioremediation	V1,144
			U.S. Filter/WTS Ultrox	Ultraviolet Radiation and Oxidation	V1,168
			U. of Wisconsin - Madison	Photoelectrocatalytic Degradation and Removal	V2,138
		Portable Gas Chromatographs	Bruker Analytical Systems, Inc.	Mobile Environmental Monitor	V3,20
			Sentex Sensing Technology, Inc.	Scentograph Plus II Portable Gas Chromatograph	V3,60
			SRI Instruments	Compact Gas Chromatograph	V3,66
			U.S. EPA	Field Analytical Screening Program - PCB Method	V3,78
		Solidification/ Stabilization	Wheelabrator Clean Air Systems, Inc.	PO*WW*ER™ Technology	V1,178
		Spectrometers	Graseby Ionics, Ltd., and PCP, Inc.	Ion Mobility Spectrometry	V3,36
		Test Kits	Strategic Diagnostic, Inc.	Ensys Penta Test System	V3,68
			Hanby Environmental Laboratory Procedure, Inc.	Test Kits for Organic Contaminants in Soil and Water	V3,38
		Thermal Destruction	BWX Technologies, Inc.	Cyclone Furnace	V1,44
			U. of Dayton Research Institute	Photothermal Detoxification Unit	V2,106
	Petroleum Hydrocarbons	Contaminant Survey Systems	W.L. Gore and Associates, Inc.	GORE-SORBER Screening Survey	V3,82

APPLICABILITY INDEX (continued)

Media	Contaminants	Treatment Type	Technology Vendor	Technology	Volume, Page Number
Ground water (continued)	Petroleum Hydrocarbons (continued)	Materials Handling	National Risk Management Research Laboratory, the U. of Cincinnati, and FRX, Inc.	Hydraulic Fracturing	V1,124
		Physical/ Chemical Thermal Desorption	New Jersey Institute of Technology	GHEA Associates Process	V2,86
		Physical/ Chemical Treatment	Calgon Carbon Oxidation Technologies	perox-pure™ Chemical Oxidation Technology	V1,46
			Geokinetics International, Inc.	Electroheat-Enhanced Nonaqueous Phase Liquids Removal	V1,196
			SBP Technologies, Inc.	Membrane Filtration and Bioremediation	V1,144
			SIVE Services	Steam Injection and Vacuum Extraction	V1,230
		Portable Gas Chromatographs	SRI Instruments	Compact Gas Chromatograph	V3,66
		Test Kits	Idetek, Inc.	Equate® Immunoassay	V3,46
	Radionuclides	Physical/ Chemical Radioactive Waste Treatment	Filter Flow Technology, Inc.	Colloid Polishing Filter Method	V1,76
		Physical/ Chemical Treatment	Atomic Energy of Canada, Limited	Chemical Treatment and Ultrafiltration	V2,22
			Selentec Environmental Technologies, Inc.	Selentec MAG* SEP Technology	V1,226
		Thermal Destruction	BWX Technologies, Inc.	Cyclone Furnace	V1,44
	SVOCs	Biological Degradation	Harding Lawson Associates	Two-Zone, Plume Interception, In Situ Treatment Technology	V2,48
			Biotrol®	Biological Aqueous Treatment System	V1,38
			Institute of Gas Technology	Chemical and Biological Treatment	V2,56
			New York State Dept. Of Environmental Conservation/R.E. Wright Environmental Inc.	In Situ Bioventing Treatment System	V1,130
			IT Corp.	Oxygen Microbubble In Situ Bioremediation	V2,126
			ZENON Environmental Inc.	ZenoGem™ Process	V1,184
		Contaminant Survey Systems	Quadrel Srvices, Inc.	Emflux Soil-Gas Survey System	V3,54
			W.L. Gore and Associates, Inc.	GORE-SORBER Screening Survey	V3,82
		Physical/ Chemical Thermal Desorption	ELI Eco Logic Inc.	Gas-Phase Chemical Reduction Process	V1,68
			KAI Technologies, Inc./Brown and Root Environmental	Radio Frequency Heating	V1,106

APPLICABILITY INDEX (continued)

Media	Contaminants	Treatment Type	Technology Vendor	Technology	Volume, Page Number
Ground water (continued)	SVOCs (continued)	Physical/Chemical Thermal Desorption (continued)	New Jersey Institute of Technology	GHEA Associates Process	V2,86
			NOVATERRA, Inc.	In Situ Soil Treatments (Steam/ Air Stripping)	V1,134
			SIVE Services	Steam Injection and Vacuum Extraction	V1,230
			SoilTech ATP Systems, Inc.	Anaerobic Thermal Processor	V1,150
		Physical/ Chemical Treatment	ARS Technologies, Inc.	Pneumatic Fracturing Extraction™ and Catalytic Oxidation	V1,24
			Calgon Carbon Oxidation Technologies	perox-pure™ Chemical Oxidation Technology	V1,46
			CF Systems Corp.	Liquified Gas Solvent Extraction (LG-SX) Technology	V1,48
			High Voltage Environmental Applications, Inc.	High-Energy Electron Beam Irradiation	V2,54
			High Voltage Environmental Applications, Inc.	High-Energy Electron Irradiation	V1,94
			Pulse Sciences, Inc.	X-ray Treatment of Aqueous Solutions	V2,90
			SBP Technologies, Inc.	Membrane Filtration and Bioremediation	V1,144
			Terra Vac, Inc.	In Situ and Ex Situ Vacuum Extraction	V1,160
			U. of Wisconsin - Madison	Photoelectrocatalytic Degradation and Removal	V2,138
			Roy F. Weston, Inc./IEG Technologies	UVB - Vacuum Vaporizing Well	V1,176
			Xerox Corp.	2-PHASE™ EXTRACTION Process	V1,180
		Portable Gas Chromatographs	Analytical and Remedial Technology, Inc.	Automated Sampling and Analytical Platform	V3,14
			Bruker Analytical Systems, Inc.	Mobile Environmental Monitor	V3,20
			U.S. EPA	Field Analytical Screening Program - PCB Method	V3,78
		Solidification/ Stabilization	Wheelabrator Clean Air Systems, Inc.	PO*WW*ER™ Technology	V1,178
		Spectrometers	Graseby Ionics, Ltd., and PCP, Inc.	Ion Mobility Spectrometry	V3,36
		Test Kits	Strategic Diagnostic, Inc. Corp.	RaPID Assay®	V3,72
		Thermal Destruction	BWX Technologies, Inc.	Cyclone Furnace	V1,44
			Texaco Inc.	Texaco Gasification process	V1,162
			U. of Dayton Research Institute	Photothermal Detoxification Unit	V2,106
		Other	Berkeley Environmental Restoration Center	In Situ Steam Enhanced Extraction Process	V1,28

APPLICABILITY INDEX (continued)

Media	Contaminants	Treatment Type	Technology Vendor	Technology	Volume, Page Number
Ground water (continued)	VOCs	Biological Degradation	Billings and Associates, Inc.	Subsurface Volatilization and Ventilation System (SVVS®)	V1,30
			Bio-Rem, Inc.	Augmented In Situ Subsurface Bioremediation Process	V1,34
			Biotrol®	Biological Aqueous Treatment System	V1,38
			Electrokinetics, Inc.	In Situ Bioremediation by Electrokinetic Injection	V2,120
			New York State Dept. of Environmental Conservation/R.E. Wright Environmental, Inc.	In Situ Bioventing Treatment System	V1,130
			New York State Department of Environmental Conservation/SBP Technologies	Vacuum-Vaporized Well System	V1,128
			IT Corp.	Oxygen Microbubble In Situ Bioremediation	V2,126
			ITT Night Vision	In Situ Enhanced Bioremediation of Groundwater	V1,198
			Phytokinetics, Inc.	Phytoremediation of Contaminated Soils	V2,128
			Phytokinetics, Inc.	Phytoremediation Process	V1,210
			U.S. Air Force	Phytoremediation of TCE-Contaminated Shallow Groundwater	V1,234
			ZENON Environmental Inc.	ZenoGem™ Process	V1,184
		Contaminant Survey systems	Quadrel Srvices, Inc.	Emflux Soil-Gas Survey System	V3,54
			W.L. Gore and Associates, Inc.	GORE-SORBER Screening Survey	V3,82
		Materials Handling	National Risk Management Research Laboratory, The U. of Cincinnati, and FRX, Inc.	Hydraulic Fracturing	V1,124
		Physical/ Chemical Thermal Desorption	Hughes Environmental Systems, Inc.	Steam Enhanced Recovery Process	V1,100
			KAI Technologies, Inc./Brown and Root Environmental	Radio Frequency Heating	V1,106
			New Jersey Institute of Technology	GHEA Associates Process	V2,86
			NOVATERRA, Inc.	In Situ Soil Treatments (Steam/ Air Stripping)	V1,134
			Rochem Separation Systems, Inc.	Rochem Disc Tube™ Module System	V1,142

APPLICABILITY INDEX (continued)

Media	Contaminants	Treatment Type	Technology Vendor	Technology	Volume, Page Number
Ground water (continued)	VOCs (continued)	Physical/Chemical Thermal Desorption (continued)	SIVE Services	Steam Injection and Vacuum Extraction	V1,230
			SoilTech ATP Systems, Inc.	Anaerobic Thermal Processor	V1,150
		Physical/ Chemical Treatment	ARS Technologies, Inc.	Pneumatic Fracturing Extraction™ and Catalytic Oxidation	V1,24
			Arizona State U./ Zentox Corp.	Photocatalytic Oxidation with Air Stripping	V2,18
			Calgon Carbon Oxidation Technologies	perox-pure™ Chemical Oxidation Technology	V1,46
			CF Systems Corp.	Liquified Gas Solvent Extraction (LG-SX) Technology	V1,48
			EnviroMetal Technologies, Inc.	Reactive Barrier	V1,194
			MACTEC-SBP Technologies Company, L.L.C.	NoVOCs™ In-Well Stripping Technology	V1,204
			EnviroMetal Technologies, Inc.	In Situ and Ex Situ Metal Enhanced Abiotic Degradation of Dissolved Halogenated Organic Compounds in Groundwater	V1,72
			Geokinetics International, Inc.	Electroheat-Enhanced Nonaqueous Phase Liquids Removal	V1,196
			High Voltage Environmental Applications, Inc.	High Energy Electron Irradiation	V1,94
			KSE, Inc.	Adsorption-Integrated-Reaction Process	V1,200/ V2,24
			Matrix Photocatalytic Inc.	Photocatalytic Water Treatment	V1,110
			Morrison Knudsen Corp./Spetstamponazhgeologia Enterprises/STG Technologies	Clay-Base Grouting Technology	V1,114
			Pulse Sciences, Inc.	X-ray Treatment of Aqueous Solutions	V2,90
			Radian International LCC	Integrated Vapor Extraction and Steam Vacuum Stripping and Soil Vapor Extraction/Reinjection	V1,138
			SBP Technologies, Inc.	Membrane Filtration and Bioremediation	V1,144
			Terra Vac, Inc.	In Situ and Ex Situ Vacuum Extraction	V1,160
			U.S. Filter/WTS Ultrox	Ultraviolet Radiation and Oxidation	V1,168
			U. of Nebraska - Lincoln	Center Pivot Spray Irrigation System	V1,170
			UV Technologies, Inc.	PhotoCAT™ Process	V2,112
			Roy F. Weston, Inc.	Ambersorb® 563 Adsorbent	V2,116
			Roy F. Weston, Inc./IEG Technologies	UVB - Vacuum Vaporizing Well	V1,176
			Xerox Corp.	2-PHASE™ EXTRACTION Process	V1,180

APPLICABILITY INDEX (continued)

Media	Contaminants	Treatment Type	Technology Vendor	Technology	Volume, Page Number
Ground water (continued)	VOCs (continued)	Physical/Chemical Treatment (continued)	ZENON Environmental Inc.	Cross-Flow Pervaporation System	V1,182
		Portable Gas Chromatographs	Bruker Analytical Systems, Inc.	Mobile Environmental Monitor	V3,20
			HNU Systems, Inc.	HNU GC 311D Portable Gas Chromatograph	V3,42
			Hewlitt-Packard Company	Portable Gas Analyzer	V3,40
			Photovac Monitoring Instruments	PE Photovac Voyager Portable Gas Chromatograph	V3,56
			Sentex Sensing Technology, inc.	Scentograph Plus II Portable Gas Chromatograph	V3,60
			SRI Instruments	Compact Gas Chromatograph	V3,66
			U.S. EPA	Field Analytical Screening Program - PCB Method	V3,78
		Solidification/ Stabilization	Wheelabrator Clean Air Systems, Inc.	PO*WW*ER™ Technology	V1,178
		Spectrometers	Graseby Ionics, Ltd., and PCP, Inc.	Ion Mobility Spectrometry	V3,36
		Test Kits	Hanby Environmental Laboratory Procedure, Inc.	Test Kits for Organic Contaminants in Soil and Water	V3,38
			Strategic Diagnostic, Inc. Corp.	RaPID Assay®	V3,72
		Thermal Destruction	Texaco Inc.	Texaco Gasification Process	V1,162
	Other	Physical/ Chemical Treatment	North American Technologies Group, Inc.	Oleophilic Amine-Coated Ceramic Chip	V1,132
			RECRA Environmental, Inc.	Alternating Electrocoagulation Technology	V2,92
Leachate	Aromatic VOCs	Biological Degradation	Biotrol®	Biological Aqueous Treatment System	V1,38
			Electrokinetics, Inc.	In Situ Bioremediation by Electrokinetic Injection	V2,120
			ZENON Environmental Inc.	ZenoGem™ Process	V1,184
		Physical/ Chemical Thermal Desorption	NOVATERRA, Inc.	In Situ Soil Treatments (Steam/Air Stripping)	V1,134
			Rochem Separation Systems, Inc.	Rochem Disc Tube™ Module System	V1,142
		Physical/ Chemical Treatment	CF Systems, Corp.	Liquified Gas Solvent Extraction (LG-SX) Technology	V1,48
			High Voltage Environmental Applications, Inc.	High Energy Electron Beam Irradiation	V2,54
			High Voltage Environmental Applications, Inc.	High Energy Electron Irradiation	V1,94

APPLICABILITY INDEX (continued)

Media	Contaminants	Treatment Type	Technology Vendor	Technology	Volume, Page Number
Leachate (continued)	Aromatic VOCs (continued)	Physical/ Chemical Treatment (continued)	Magnum Water Technology	CA-OX® Process	V1,108
			Matrix Photocatalytic Inc.	Photocatalytic Water Treatment	V1,110
			Pulse Sciences, Inc.	X-ray Treatment of Aqueous Solutions	V2,90
			SBP Technologies, Inc.	Membrane Filtration and Bioremediation	V1,144
			ZENON Environmental Inc.	Cross-Flow Pervaporation System	V1,182
		Portable Gas Chromatographs	Analytical and Remedial Technology, inc.	Automated Sampling and Analytical Platform	V3,14
			Bruker Analytical Systems, Inc.	Mobile Environmental Monitor	V3,20
			HNU Systems, Inc.	HNU GC 311D Portable Gas Chromatograph	V3,42
			Sentex Sensing Technology, Inc.	Scentograph Plus II Portable Gas Chromatograph	V3,60
			SRI Instruments	Compact Gas Chromatograph	V3,66
			U.S. EPA	Field Analytical Screening Program - PCB Method	V3,78
		Solidification/ Stabilization	Wheelabrator Clean Air Systems, Inc.	PO*WW*ER™ Technology	V1,178
		Spectrometers	Graseby Ionics, Ltd., and PCP, Inc.	Ion Mobility Spectrometry	V3,36
		Test Kits	Hanby Environmental Laboratory procedure, inc.	Test Kits for Organic Contaminants in Soil and Water	V3,38
	Cyanide	Biological Degradation	Pintail Systems, Inc.	Spent Ore Bioremediation process	V1,214
	Dioxins	Physical/ Chemical Thermal Desorption	ELI Eco Logic Inc.	Gas-Phase Chemical Reduction Process	V1,68
		Physical/ Chemical Treatment	CF Systems Corp.	Liquified Gas Solvent Extraction (LG-SX) Technology	V1,48
			High Voltage Environmental Applications, Inc.	High-Energy Electron Irradiation	V1,94
			Matrix Photocatalytic Inc.	Photocatalytic Water Treatment	V1,110
			SBP Technologies, Inc.	Membrane Filtration and Bioremediation	V1,144
		Portable Gas Chromatographs	Bruker Analytical Systems, inc.	Mobile Environmental Monitor	V3,20
		Solidification/ Stabilization	Wheelabrator Clean Air Systems, Inc.	PO*WW*ER™ Technology	V1,178
		Spectrometers	Graseby Ionics, Ltd., and PCP, Inc.	Ion Mobility Spectrometry	V3,36
		Test Kits	Strategic Diagnostic, Inc. Corp.	RaPID Assay®	V3,72
		Thermal Destruction	BWX Technologies, Inc.	Cyclone Furnace	V1,44

APPLICABILITY INDEX (continued)

Media	Contaminants	Treatment Type	Technology Vendor	Technology	Volume, Page Number
Leachate (continued)	Explosives	Physical/ Chemical Thermal Desorption	New Jersey Institute of Technology	GHEA Associates Process	V2,86
		Physical/ Chemical Treatment	U.S. Filter/WTS Ultrox	Ultraviolet Radiation and Oxidation	V1,168
	Furans	Physical/ Chemical Thermal Desorption	ELI Eco Logic Inc.	Gas-Phase Chemical Reduction Process	V1,68
		Physical/ Chemical Treatment	CF Systems Corp.	Liquified Gas Solvent Extraction (LG-SX) Technology	V1,48
			High Voltage Environmental Applications, Inc.	High-Energy Electron Irradiation	V1,94
			Matrix Photocatalytic Inc.	Photocatalytic Water Treatment	V1,110
			SBP Technologies, Inc.	Membrane Filtration and Bioremediation	V1,144
		Portable Gas Chromatographs	Bruker Analytical Systems, inc.	Mobile Environmental Monitor	V3,20
		Solidification/ Stabilization	Wheelabrator Clean Air Systems, Inc.	PO*WW*ER™ Technology	V1,178
		Spectrometers	Graseby Ionics, Ltd., and PCP, Inc.	Ion Mobility Spectrometry	V3,36
		Test Kits	Strategic Diagnostic, Inc. Corp.	RaPID Assay®	V3,72
		Thermal Destruction	BWX Technologies, Inc.	Cyclone Furnace	V1,44
	Halogenated VOCs	Biological Degradation	Biotrol®	Methanotrophic Bioreactor System	V2,28
			ZENON Environmental Inc.	ZenoGem™ Process	V1,184
		Physical/ Chemical Thermal Desorption	New Jersey Institute of Technology	GHEA Associates process	V2,86
			NOVATERRA, Inc.	In-Situ Soil Treatments (Steam/Sir Stripping)	V1,134
		Physical/ Chemical Treatment	CF Systems Corp.	Liquified Gas Solvent Extraction (LG-SX) Technology	V1,48
			EnviroMetal Technologies Inc.	In Situ and Ex Situ Metal Enhanced Abiotic Degradation of Dissolved Halogenated Organic Compounds in Groundwater	V1,72
			High Voltage Environmental Applications, Inc.	High Energy Electron Beam Irradiation	V2,54
			High Voltage Environmental Applications, Inc.	High Energy Electron Irradiation	V1,94
			Magnum Water Technology	CAV-OX® Process	V1,108
			Matrix Photocatalytic Inc.	Photocatalytic Water Treatment	V1,110
			Pulse Sciences, Inc.	X-ray Treatment of Aqueous Solutions	V2,90

APPLICABILITY INDEX (continued)

Media	Contaminants	Treatment Type	Technology Vendor	Technology	Volume, Page Number
Leachate (continued)	Halogenated VOCs (continued)	Physical/ Chemical Treatment (continued)	SBP Technologies, Inc.	Membrane Filtration and Bioremediation	V1,144
			U.S. Filter/WTS Ultrox	Ultraviolet Radiation and Oxidation	V1,168
			UV Technologies, Inc.	PhotoCAT™ Process	V2,112
			Roy F. Weston, Inc.	Ambersorb® 563 Adsorbent	V2,116
			ZENON Environmental Inc.	Cross-Flow Pervaporation System	V1,182
		Portable Gas Chromatographs	Analytical and Remedial Technology, Inc.	Automated Sampling and Analytical Platform	V3,14
			Bruker Analytical Systems, Inc.	Mobile Environmental Monitor	V3,20
			Sentex Sensing Technology, Inc.	Scentograph plus II Portable Gas Chromatograph	V3,60
			SRI Instruments	Compact Gas Chromatograph	V3,66
			U.S. EPA	Field Analytical Screening Program - PCB Method	V3,78
		Solidification/ Stabilization	Wheelabrator Clean Air Systems, inc.	PO*WW*ER™ Technology	V1,178
		Spectrometers	Graseby Ionics, Ltd., and PCP, Inc.	Ion Mobility Spectrometry	V3,36
		Test Kits	Strategic Diagnostic, Inc. Corp.	RaPID Assay®	V3,72
		Thermal Destruction	Energy and Environmental Research Corp.	Hybrid Fluidized Bed System	V2,42
	Herbicides	Biological Degradation	Biotrol®	Biological Aqueous Treatment System	V1,38
			Electrokinetics, Inc.	In Situ Bioremediation by Electrokinetic Injection	V2,120
			ZENON Environmental Inc.	ZenoGem™ Process	V1,184
		Physical/ Chemical Thermal Desorption	ELI Eco Logic Inc.	Gas-Phase Chemical Reduction Process	V1,68
		Physical/ Chemical Treatment	CF Systems Corp.	Liquified Gas Solvent Extraction (LG-SX) Technology	V1,48
			High Voltage Environmental Applications, Inc.	High-Energy Electron Irradiation	V1,94
			Magnum Water Technology	CAV-OX® Process	V1,108
			Matrix Photocatalytic Inc.	Photocatalytic Water Treatment	V1,110
			SBP Technologies, Inc.	Membrane Filtration and Bioremediation	V1,144
		Portable Gas Chromatographs	Bruker Analytical Systems, Inc.	Mobile Environmental Monitor	V3,20
		Solidification/ Stabilization	Wheelabrator Clean Air Systems, inc.	PO*WW*ER™ Technology	V1,178
		Spectrometers	Graseby Ionics, Ltd., and PCP, Inc.	Ion Mobility Spectrometry	V3,36

APPLICABILITY INDEX (continued)

Media	Contaminants	Treatment Type	Technology Vendor	Technology	Volume, Page Number
Leachate (continued)	Herbicides (continued)	Test Kits	Strategic Diagnostic, Inc. Corp.	RaPID Assay®	V3,72
		Thermal Destruction	BWX Technologies, Inc.	Cyclone Furnace	V1,44
	Metals	Biological Degradation	Colorado Dept. Of Public Health and Environment	Constructed Wetlands-Based Treatment	V1,54
			Pintail Systems, Inc.	Biomineralization of Metals	V2,130
			Pintail Systems, Inc.	Spent ore Bioremediation Process	V1,214
		Field Portable X-ray Fluorescence	Metorex, Inc.	Field Portable X-ray Fluorescence Analysis	V3,48
		Physical/ Chemical Radioactive Waste Treatment	Filter Flow Technology, Inc.	Colloid Polishing Filter Method	V1,76
		Physical/ Chemical Thermal Desorption	New Jersey Institute of Technology	GHEA Associates Process	V2,86
			Rochem Separation Systems, Inc.	Rochem Disc Tube™ Module System	V1,142
		Physical/ Chemical Treatment	Atomic Energy of Canada, Limited	Chemical Treatment and Ultrafiltration	V2,22
			Atomic Energy of Canada, Limited	Ultrasonic-Aided Leachate Treatment	V2,24
			E.I. DuPont de Nemours and Co., and Oberlin Filter Co.	Membrane Microfiltration	V1,60
			Dynaphore, Inc.	FORAGER® Sponge	V1,62
			EPOC Water, Inc.	Precipitation, Microfiltration, and Sludge Dewatering	V1,74
			Cure International, Inc.	CURE® Electrocoagulation Wastewater Treatment System	V1,58
			Lewis Environmental Services, Inc./ Hickson Corp.	Chromated Copper Arsenate Soil Leaching Process	V2,76
			Matrix Photocatalytic Inc.	Photocatalytic Water Treatment	V1,110
			Morrison Knudsen Corp./Spetstamponazhgeologia Enterprises/ STG Technologies	Clay-Base Grouting Technology	V1,114
			RECRA Environmental, Inc.	Alternating Current Electrocoagulation Technology	V2,92
			Selentec Environmental Technologies, Inc.	Selentec MAG*SEP Technology	V1,226
			U. of Washington	Adsorption Filtration	V2,110
		Portable Gas Chromatographs	HNU Systems, Inc.	HNU GC 311D Portable Gas Chromatograph	V3,42
		Solidification/ Stabilization	Wheelabrator Clean Air System, Inc.	PO*WW*ER™ Technology	V1,178
		Thermal Destruction	BWX Technologies, Inc.	Cyclone Furnace	V1,44

APPLICABILITY INDEX (continued)

Media	Contaminants	Treatment Type	Technology Vendor	Technology	Volume, Page Number
Leachate (continued)	Metals (continued)	Thermal Destruction (continued)	Energy and Environmental Research Corp.	Hybrid Fluidized Bed System	V2,42
	PAHs	Physical/ Chemical Treatment	SBP Technologies, Inc.	Membrane Filtration and Bioremediation	V1,144
		Portable Gas Chromatographs	Bruker Analytical Systems, Inc.	Mobile Environmental Monitor	V3,20
			SRI Instruments	Compact Gas Chromatograph	V3,66
	PCBs	Biological Degradation	ZENON Environmental Inc.	ZenoGem™ Process	V1,184
		Field Portable X-ray Fluorescence	Metorex, Inc.	Field Portable X-ray Fluorescence Analysis	V3,48
		Physical/ Chemical Thermal Desorption	ELI Eco Logic Inc.	Gas-Phase Chemical Reduction Process	V1,68
		Physical/ Chemical Treatment	Calgon Carbon Oxidation Technologies	perox-pure™ Chemical Oxidation Technology	V1,46
			CF Systems Corp.	Liquified Gas Solvent Extraction (LG-SX) Technology	V1,48
			High Voltage Environmental Applications, Inc.	High-Energy Electron Beam Irradiation	V2,54
			High Voltage Environmental Applications, Inc.	High-Energy Electron Irradiation	V1,94
			Magnum Water Technology	CAV-OX® Process	V1,108
			Matrix Photocatalytic Inc.	Photocatalytic Water Treatment	V1,110
			Morrison Knudsen Corp./Spetstamponazhgeologia Enterprises/ STG Technologies	Clay-Base Grouting Technology	V1,114
			SBP Technologies, Inc.	Membrane Filtration and Bioremediation	V1,144
			U.S. Filter/WTS Ultrox	Ultraviolet Radiation and Oxidation	V1,168
		Portable Gas Chromatographs	Bruker Analytical Systems, inc.	Mobile Environmental Monitor	V3,20
			HNU Systems, Inc.	HNU GC 311D Portable Gas Chromatograph	V3,42
			Sentex Sensing Technology, Inc.	Scentograph Plus II Portable Gas Chromatograph	V3,60
			SRI Instruments	Compact Gas Chromatograph	V3,66
			U.S. EPA	Field Analytical Screening Program - PCB Method	V3,78
		Solidification/ Stabilization	Wheelabrator Clean Air Systems, Inc.	PO*WW*ER™ Technology	V1,178
		Spectrometers	Graseby Ionics, Ltd., and PCP, Inc.	Ion Mobility Spectrometry	V3,36
		Test Kits	Strategic Diagnostic, Inc.	Ensys Penta Test Systems	V3,68

APPLICABILITY INDEX (continued)

Media	Contaminants	Treatment Type	Technology Vendor	Technology	Volume, Page Number
Leachate (continued)	PCBs (continued)	Test Kits (continued)	Hanby Environmental Laboratory Procedure, Inc.	Test Kits for Organic Contaminants in Soil and Water	V3,38
			Energy and Environmental Research Corp.	Hybrid Fluidized Bed System	V2,42
	PCP	Physical/ Chemical Treatment	SBP Technologies, Inc.	Membrane Filtration and Bioremediation	V1,144
			U.S. Filter/WTS Ultrox	Ultraviolet Radiation and Oxidation	V1,168
		Test Kits	Strategic Diagnostic, Inc.	Ensys Penta Test System	V3,68
			Strategic Diagnostic, Inc. Corp.	RaPID Assay®	V3,72
	Pesticides	Biological Degradation	Biotrol®	Biological Aqueous Treatment System	V1,38
			Electrokinetics, Inc.	In Situ Bioremediation by Electrokinetic Injection	V2,120
			ZENON Environmental Inc.	ZenoGem™ Process	V1,184
		Physical/ Chemical Thermal Desorption	ELI Eco Logic Inc.	Gas-Phase Chemical Reduction Process	V1,68
		Physical/ Chemical Treatment	Calgon Carbon Oxidation Technologies	perox-pure™ Chemical Oxidation Technology	V1,46
			CF Systems Corp.	Liquified Gas Solvent Extraction (LG-SX) Technology	V1,48
			High Voltage Environmental Applications, Inc.	High-Energy Electron Beam Irradiation	V2,54
			High Voltage Environmental Applications, Inc.	High-Energy Electron Irradiation	V1,94
			Magnum Water Technology	CAV-OX® Process	V1,108
			Matrix Photocatalytic Inc.	Photocatalytic Water Treatment	V1,110
			Morrison Knudsen Corp./Spetstamponazhgeologia Enterprises/ STG Technologies	Clay-Base Grouting Technology	V1,114
			SBP Technologies, Inc.	Membrane Filtration and Bioremediation	V1,144
			U.S. Filter/WTS Ultrox	Ultraviolet Radiation and Oxidation	V1,168
		Portable Gas Chromatographs	Bruker Analytical Systems, Inc.	Mobile Environmental Monitor	V3,20
			Sentex Sensing Technology, Inc.	Scentograph Plus II Portable Gas Chromatograph	V3,60
			SRI Instruments	Compact Gas Chromatograph	V3,66
			U.S. EPA	Field Analytical Screening Program - PCB Method	V3,78

APPLICABILITY INDEX (continued)

Media	Contaminants	Treatment Type	Technology Vendor	Technology	Volume, Page Number
Leachate (continued)	Pesticides (continued)	Solidification/ Stabilization	Wheelabrator Clean Air Systems, Inc.	PO*WW*ER Technology	V1,178
		Spectrometers	Graseby Ionics, Ltd., and PCP, Inc.	Ion Mobility Spectrometry	V3,36
		Test Kits	Strategic Diagnostic, Inc.	Ensys Penta Test System	V3,68
			Hanby Environmental Laboratory Procedure, inc.	Test Kits for Organic Contaminants in Soil and Water	V3,38
			Strategic Diagnostic, Inc. Corp.	RaPID Assay®	V3,72
		Thermal Destruction	BWX Technologies, Inc.	Cyclone Furnace	V1,44
			Energy and Environmental Research Corp.	Hybrid Fluidized Bed System	V2,40
	Petroleum Hydrocarbons	Physical/ Chemical Thermal Desorption	New Jersey Institute of Technology	GHEA Associates Process	V2,86
		Physical/ Chemical Treatments	Calgon Carbon Oxidation Technologies	perox-pure™ Chemical Oxidation Technology	V1,46
			SBP Technologies, Inc.	Membrane Filtration and Bioremediation	V1,144
		Portable Gas Chromatographs	SRI Instruments	Compact Gas Chromatograph	V3,66
	Radionuclides	Physical/ Chemical Radioactive Waste Treatment	Filter Flow Technology, Inc.	Colloid Polishing Filter Method	V1,76
		Physical/ Chemical Treatment	Atomic Energy of Canada, Limited	Chemical Treatment and Ultrafiltration	V2,22
			Atomic Energy of Canada, Limited	Ultrasonic-Aided Leachate Treatment and Ultrafiltration	V2,24
			Selentec Environmental Technologies, Inc.	Selentec MAG*SEP Technology	V1,226
		Thermal Destruction	BWX Technologies, Inc.	Cyclone Furnace	V1,44
	SVOCs	Biological Degradation	Biotrol®	Biological Aqueous Treatment System	V1,38
			ZENON Environmental Inc.	ZenoGem™ Process	V1,184
		Physical/ Chemical Thermal Desorption	ELI Eco Logic Inc.	Gas-Phase Chemical Reduction Process	V1,68
			New Jersey Institute of Technology	GHEA Associates Process	V2,86
			NOVATERRA, Inc.	In Situ Soil Treatments (Steam/ Air Stripping)	V1,134
		Physical/ Chemical Treatment	Calgon Carbon Oxidation Technologies	perox-pure™ Chemical Oxidation Technology	V1,46
			CF Systems Corp.	Liquified Gas Solvent Extraction (LG-SX) Technology	V1,48
			High Voltage Environmental Applications, Inc.	High-Energy Electron Beam Irradiation	V2,54

APPLICABILITY INDEX (continued)

Media	Contaminants	Treatment Type	Technology Vendor	Technology	Volume, Page Number
Leachate (continued)	SVOCs (continued)	Physical/Chemical Treatment (continued)	High Voltage Environmental Applications, Inc.	High-Energy Electron Irradiation	V1,94
			Pulse Sciences, Inc.	X-ray Treatment of Aqueous Solutions	V2,90
			SBP Technologies, Inc.	Membrane Filtration and Bioremediation	V1,144
		Portable Gas Chromatographs	Analytical and Remedial Technology, Inc.	Automated Sampling and Analytical Platform	V3,14
			Bruker Analytical Systems, inc.	Mobile Environmental Monitor	V3,20
			U.S. EPA	Field Analytical Screening Program - PCB Method	V3,78
		Solidification/ Stabilization	Wheelabrator Clean Air Systems, Inc.	PO*WW*ER™ Technology	V1,178
		Spectrometers	Graseby Ionics, Ltd., and PCP, Inc.	Ion Mobility Spectrometry	V3,36
		Test Kits	Strategic Diagnostic, Inc. Corp.	RaPID Assay®	V3,72
		Thermal Destruction	BWX Technologies, Inc.	Cyclone Furnace	V1,44
	VOCs	Biological Degradation	Biotrol®	Biological Aqueous Treatment System	V1,38
			Electrokinetics, Inc.	In Situ Bioremediation by Electrokinetic Injection	V2,120
			ZENON Environmental Inc.	ZenoGem™ Process	V1,184
		Physical/ Chemical Thermal Desorption	New Jersey Institute of Technology	GHEA Associates Process	V2,86
			NOVATERRA, Inc.	In Situ Soil Treatment (Steam/ Air Stripping)	V1,134
			Rochem Separation Systems, Inc.	Rochem Disc Tube™ Module System	V1,142
		Physical/ Chemical Treatment	Calgon Carbon Oxidation Technologies	perox-pure™ Chemical Oxidation Technology	V1,46
			CF Systems Corp.	Liquified Gas Solvent Extraction (LG-SX) Technology	V1,48
			EnviroMetal Technologies Inc.	In Situ and Ex Situ Metal Enhanced Abiotic Degradation of Dissolved Halogenated Organic Compounds in Groundwater	V1,72
			High Voltage Environmental Applications, Inc.	High-Energy Electron Irradiation	V1,94
			Matrix Photocatalytic Inc.	Photocatalytic Water Treatment	V1,110
			Morrison Knudsen Corp./Spetstamponazhgeologia Enterprises/ STG Technologies	Clay-Base Grouting Technology	V1,114

APPLICABILITY INDEX (continued)

Media	Contaminants	Treatment Type	Technology Vendor	Technology	Volume, Page Number
Leachate (continued)	VOCs (continued)	Physical/Chemical Treatment (continued)	Pulse Sciences, Inc.	X-ray Treatment of Aqueous Solutions	V2,90
			SBP Technologies, Inc.	Membrane Filtration and Bioremediation	V1,144
			U.S. Filter/WTS Ultrox	Ultraviolet Radiation and Oxidation	V1,168
			UV Technologies, Inc.	PhotoCAT™ Process	V2,112
			Roy F. Weston, Inc.	Ambersorb® 563 Adsorbent	V2,116
			ZENON Environmental, Inc.	Cross-Flow Pervaporation System	V1,184
		Portable Gas Chromatographs	Bruker Analytical Systems, Inc.	Mobile Environmental Monitor	V3,20
			HNU Systems, Inc.	HNU GC 311D Portable Gas Chromatograph	V3,42
			Sentex Sensing Technology, Inc.	Scentograph Plus II Portable Gas Chromatograph	V3,60
			SRI Instruments	Compact Gas Chromatograph	V3,66
			U.S. EPA	Field Analytical Screening Program - PCB Method	V3,78
		Solidification/ Stabilization	Wheelabrator Clean Air Systems, Inc.	PO*WW*ER™ Technology	V1,178
		Spectrometers	Graseby Ionics, Ltd., and PCP, Inc.	Ion Mobility Spectrometry	V3,36
		Test Kits	Hanby Environmental Laboratory Procedure, Inc.	Test Kits for Organic Contaminants in Soil and Water	V3,38
			Strategic Diagnostic, Inc. Corp.	RaPID Assay®	V3,72
		Thermal Destruction	Energy and Environmental Research Corp.	Hybrid Fluidized Bed System	V2,40
	Other	Physical/ Chemical Treatment	North American Technologies Group, Inc.	Oleophilic Amine-Coated Ceramic Chip	V1,132
			RECRA Environmental, inc.	Alternating Current Electrocoagulation Technology	V2,92
Liquid	Aromatic VOCs	Biological Degradation	Harding Lawson Associates	Two-Zone Plume Interception, In Situ Treatment Technology	V2,48
			Billings and Associates, Inc.	Subsurface Volatilization and Ventilation System (SVVS®)	V1,30
			Bio-Rem, Inc.	Augmented In Situ Subsurface Bioremediation Process	V1,34
			Biotrol®	Biological Aqueous Treatment System	V1,38
			Electrokinetics, Inc.	In Situ Bioremediation by Electrokinetic Injection	V2,120
			New York State Dept. Of Environmental Conservation/R.E. Wright Environmental, Inc.	In Situ Bioventing Treatment System	V1,130

APPLICABILITY INDEX (continued)

Media	Contaminants	Treatment Type	Technology Vendor	Technology	Volume, Page Number
Liquids (continued)	Aromatic VOCs (continued)	Biological Degradation (continued)	IT Corp.	Oxygen Microbubble In Situ Bioremediation	V2,126
			ZENON Environmental Inc.	ZenoGem™ Process	V1,184
		Materials Handling	National Risk Management Research Laboratory, The U. of Cincinnati, and FRX, Inc.	Hydraulic Fracturing	V1,124
		Physical/ Chemical Thermal Desorption	Hughes Environmental Systems, Inc.	Steam Enhanced Recovery Process	V1,100
			Rochem Separation Systems, Inc.	Rochem Disc Tube™ Module System	V1,142
			SoilTech ATP Systems, Inc.	Anaerobic Thermal Processor	V1,150
		Physical/ Chemical Treatment	ARS Technologies, Inc.	Pneumatic Fracturing Extraction™ and Catalytic Oxidation	V1,24
			CF Systems Corp.	Liquified Gas Solvent Extraction (LG-SX) Technology	V1,48
			High Voltage Environmental Applications, Inc.	High Energy Electron Beam Irradiation	V2,54
			High Voltage Environmental Applications, Inc.	High Energy Electron Irradiation	V1,94
			KSE, Inc.	Adsorption-Integrated-Reaction Process	V1,200/ V2,24
			Matrix Photocatalytic Inc.	Photocatalytic Water Treatment	V1,110
			Pulse Sciences, Inc.	X-ray Treatment of Aqueous Solutions	V2,90
			SBP Technologies, Inc.	Membrane Filtration and Bioremediation	V1,144
			Terra Vac, Inc.	In Situ and Ex Situ Vacuum Extraction	V1,160
			U. of Nebraska - Lincoln	Center Pivot Spray Irrigation System	V1,170
			Roy F. Weston, Inc./IEG Technologies	UVB - Vacuum Vaporizing Well	V1,176
			Xerox Corp.	2-PHASE™ EXTRACTION Process	V1,180
			ZENON Environmental Inc.	Cross-Flow Pervaporation System	V1,182
		Portable Gas Chromatographs	Analytical and Remedial Technology, Inc.	Automated Sampling and Analytical Platform	V3,14
			Bruker Analytical Systems, Inc.	Mobile Environmental Monitor	V3,20
			HNU Systems, Inc.	HNU GC 311D Portable Gas Chromatograph	V3,42
			Photovac Monitoring Instruments	PE Photovac Voyager Portable Gas Chromatograph	V3,56

APPLICABILITY INDEX (continued)

Media	Contaminants	Treatment Type	Technology Vendor	Technology	Volume, Page Number
Liquids (continued)	Aromatic VOCs (continued)	Portable Gas Chromatograph (continued)	Sentex Sensing Technology, Inc.	Scentograph Plus II Portable Gas Chromatograph	V3,60
			SRI Instruments	Compact Gas Chromatograph	V3,66
			U.S. EPA	Field Analytical Screening Program - PCB Method	V3,78
		Solidification/ Stabilization	Wheelabrator Clean Air Systems, Inc.	PO*WW*ER™ Technology	V1,178
		Spectrometers	Graseby Ionics, Ltd., and PCP, Inc.	Ion Mobility Spectrometry	V3,36
		Test Kits	Hanby Environmental Laboratory Procedure, Inc.	Test Kits for Organic Contaminants in Soil and Water	V3,38
		Thermal Destruction	Texaco Inc.	Texaco Gasification Process	V1,162
			U. of Dayton Research Institute	Photothermal Detoxification Unit	V2,106
	Cyanide	Biological Degradation	Pintail Systems, Inc.	Spent Ore Bioremediation Process	V1,214
	Diesel	Materials Handling	National Risk Management Research Laboratory, The U. of Cincinnati, and FRX, Inc.	Hydraulic Fracturing	V1,124
	Dioxins	Physical/ Chemical Thermal Desorption	ELI Eco Logic Inc.	Gas-Phase Chemical Reduction Process	V1,68
			SoilTech ATP Systems, Inc.	Anaerobic Thermal Processor	V1,150
		Physical/ Chemical Treatment	CF Systems Corp.	Liquified Gas Solvent Extraction (LG-SX) Technology	V1,48
			High Voltage Environmental Applications, Inc.	High Energy Electron Irradiation	V1,94
			Matrix Photocatalytic Inc.	Photocatalytic Water Treatment	V1,110
			SBP Technologies, Inc.	Membrane Filtration and Bioremediation	V1,144
		Portable Gas Chromatographs	Bruker Analytical Systems, Inc.	Mobile Environmental Monitor	V3,20
		Solidification/ Stabilization	Wheelabrator Clean Air Systems, Inc.	PO*WW*ER™ Technology	V1,178
		Spectrometers	Graseby Ionics, Ltd., and PCP, Inc.	Ion Mobility Spectrometry	V3,36
		Test Kits	Strategic Diagnostic, Inc. Corp.	RaPID Assay®	V3,72
		Thermal Destruction	BWX Technologies, Inc.	Cyclone Furnace	V1,44
			U. of Dayton Research Institute	Photothermal Detoxification Unit	V2,106
	Explosives	Physical/ Chemical Thermal Desorption	New Jersey Institute of Technology	GHEA Associates Process	V2,86
		Physical/ Chemical Treatment	U.S. Filter/WTS Ultrox	Ultraviolet Radiation and Oxidation	V1,168

APPLICABILITY INDEX (continued)

Media	Contaminants	Treatment Type	Technology Vendor	Technology	Volume, Page Number
Liquids (continued)	Furans	Physical/ Chemical Thermal Desorption	ELI Eco Logic Inc.	Gas-Phase Chemical Reduction Process	V1,68
			SoilTech ATP Systems, Inc.	Anaerobic Thermal Processor	V1,150
		Physical/ Chemical Treatment	CF Systems Corp.	Liquified Gas Solvent Extraction (LG-SX) Technology	V1,48
			High Voltage Environmental Applications, Inc.	High Energy Electron Irradiation	V1,94
			Matrix Photocatalytic Inc.	Photocatalytic Water Treatment	V1,110
			SBP Technologies, Inc.	Membrane Filtration and Bioremediation	V1,144
		Portable Gas Chromatographs	Bruker Analytical Systems, Inc.	Mobile Environmental Monitor	V3,20
		Solidification/ Stabilization	Wheelabrator Clean Air Systems, Inc.	PO*WW*ER™ Technology	V1,178
		Spectrometers	Graseby Ionics, Ltd., and PCP, Inc.	Ion Mobility Spectrometry	V3,36
		Test Kits	Strategic Diagnostic, Inc. Corp.	RaPID Assay®	V3,72
		Thermal Destruction	BWX Technologies, Inc.	Cyclone Furnace	V1,44
			U. of Dayton Research Institute	Photothermal Detoxification Unit	V2,106
	Gasoline	Materials Handling	National Risk Management Research Laboratory, The U. of Cincinnati, and FRX, Inc.	Hydraulic Fracturing	V1,124
	Halogenated VOCs	Biological Degradation	ABB Environmental Services, Inc.	Anaerobic-Aerobic Sequential Bioremediation of PCE	V2,50
			Harding Lawson Associates	Two-Zone Plume Interception, In Situ Treatment Technology	V2,48
			Bio-Rem, Inc.	Augmented In Situ Subsurface Bioremediation Process	V1,34
			Biotrol®	Methanotrophic Bioreactor System	V2,28
			New York State Dept. Of Environmental Conservation/R.E. Wright Environmental, Inc.	In Situ Bioventing Treatment System	V1,130
			IT Corp.	Oxygen Microbubble In Situ Bioremediation	V2,126
			U.S. Air Force	Phytoremediation of TCE-Contaminated Shallow Groundwater	V1,234
			ZENON Environmental Inc.	ZenoGem™ Process	V1,184

APPLICABILITY INDEX (continued)

Media	Contaminants	Treatment Type	Technology Vendor	Technology	Volume, Page Number
Liquids (continued)	Halogenated VOCs (continued)	Materials Handling	National Risk Management Research Laboratory, The U. of Cincinnati, and FRX, Inc.	Hydraulic Fracturing	V1,124
		Physical Chemical Treatment - Biological Degradation	Lasagna™ Public-Private Partnership	Lasagna™ In Situ Soil Remediation	V1,202
		Physical/ Chemical Thermal Desorption	Hughes Environmental Systems, Inc.	Steam Enhanced Recovery Process	V1,100
			KAI Technologies, Inc./Brown and Root Environmental	Radio Frequency Heating	V1,106
			New Jersey Institute of Technology	GHEA Associates Process	V2,86
			SoilTech ATP Systems, Inc.	Anaerobic Thermal Process	V1,150
		Physical/ Chemical Treatment	ARS Technologies, Inc.	Pneumatic Fracturing Extraction™ and Catalytic Oxidation	V1,24
			Arizona State U/Zentox Corp.	Photocatalytic Oxidation with Air Stripping	V2,18
			CF Systems Corp.	Liquified Gas Solvent Extraction (LG-SX) Technology	V1,48
			High Voltage Environmental Applications, Inc.	High Energy Electron Beam Irradiation	V2,54
			High Voltage Environmental Applications, Inc.	High Energy Electron Irradiation	V1,94
			KSE, Inc.	Adsorption-Integrated-Reaction Process	V1,200/ V2,24
			Matrix Photocatalytic Inc.	Photocatalytic Water Treatment	V1,110
			Pulse Sciences, Inc.	X-ray Treatment of Aqueous Solutions	V2,90
			SBP Technologies, Inc.	Membrane Filtration and Bioremediation	V1,144
			Terra Vac, Inc.	In Situ and Ex Situ Vacuum Extraction	V1,160
			U.S. Filter/WTS Ultrox	Ultraviolet Radiation and Oxidation	V1,168
			U. of Nebraska - Lincoln	Center Pivot Spray Irrigation System	V1,170
			UV Technologies, Inc.	PhotoCAT™ Process	V2,112
			Roy F. Weston, Inc./IEG Technologies	Ambersorb 563 Adsorbent	V2,116
			Roy F. Weston, Inc./IEG Technologies	UVB - Vacuum Vaporizing Well	V1,176
			Xerox Corp.	2-PHASE™ EXTRACTION Process	V1,180
			ZENON Environmental Inc.	Cross-Flow Pervaporation System	V1,182

APPLICABILITY INDEX (continued)

Media	Contaminants	Treatment Type	Technology Vendor	Technology	Volume, Page Number
Liquids (continued)	Halogenated VOCs (continued)	Portable Gas Chromatographs	Analytical and Remedial Technology, Inc.	Automated Sampling and Analytical Platform	V3,14
			Bruker Analytical Systems, Inc.	Mobile Environmental Monitor	V3,20
			Photovac Monitoring Instruments	PE Photovac Voyager Portable Gas Chromatograph	V3,56
			Sentex Sensing Technology, Inc.	Scentograph Plus II Portable Gas Chromatograph	V3,60
			SRI Instruments	Compact Gas Chromatograph	V3,66
			U.S. EPA	Field Analytical Screening Program - PCB Method	V3,78
		Solidification/ Stabilization	Wheelabrator Clean Air Systems, Inc.	PO*WW*ER™ Technology	V1,178
		Spectrometers	Graseby Ionics, Ltd., and PCP, Inc.	Ion Mobility Spectrometry	V3,36
		Test Kits	Strategic Diagnostic, Inc. Corp.	RaPID Assay®	V3,72
		Thermal Destruction	Texaco Inc.	Texaco Gasification Process	V1,162
			U. of Dayton Research Institute	Photothermal Detoxification Unit	V2,106
	Heavy Metals	Field Portable X-ray Fluorescence	HNU Systems, Inc.	HNU Source Excited Fluorescence Analyzer-Portable (SEFA-P) X-ray Fluorescence Analyzer	V3,44
	Herbicides	Biological Degradation	Biotrol®	Biological Aqueous Treatment System	V1,38
			Electrokinetics, Inc.	In Situ Bioremediation by Electrokinetic Injection	V2,120
			ZENON Environmental Inc.	ZenoGem™ Process	V1,184
		Physical Chemical Treatment - Biological Degradation	Lasagna™ Public - Private Partnership	Lasagna™ In Situ Soil Remediation	V1,202
		Physical/ Chemical Thermal Desorption	ELI Eco Logic Inc.	Gas-Phase Chemical Reduction Process	V1,68
			SoilTech ATP Systems, Inc.	Anaerobic Thermal Processor	V1,150
		Physical/ Chemical Treatment	CF Systems Corp.	Liquified Gas Solvent Extraction (LG-SX) Technology	V1,48
			High Voltage Environmental Applications, Inc.	High Energy Electron Irradiation	V1,94
			Matrix Photocatalytic Inc.	Photocatalytic Water Treatment	V1,110
			SBP Technologies, Inc.	Membrane Filtration and Bioremediation	V1,144
		Portable Gas Chromatographs	Bruker Analytical Systems, Inc.	Mobile Environmental Monitor	V3,20
		Solidification/ Stabilization	Wheelabrator Clean Air Systems, Inc.	PO*WW*ER™ Technology	V1,178

APPLICABILITY INDEX (continued)

Media	Contaminants	Treatment Type	Technology Vendor	Technology	Volume, Page Number
Liquids (continued)	Herbicides (continued)	Spectrometers	Graseby Ionics, Ltd., and PCP, Inc.	Ion Mobility Spectrometry	V3,36
		Test Kits	Strategic Diagnostic, Inc. Corp.	RaPID Assay®	V3,72
		Thermal Destruction	BWX Technologies, Inc.	Cyclone Furnace	V1,44
			U. of Dayton Research Institute	Photothermal Detoxification Unit	V2,106
	Inorganics	Field Portable X-ray Fluorescence	HNU Systems, Inc.	HNU Source Excited Fluorescence Analyzer-Portable (SEFA-P) X-ray Fluorescence Analyzer	V3,44
	Metals	Biological Degradation	Colorado Dept. of Public Health and Environment	Constructed Wetlands-Based Treatment	V1,54
			Pintail Systems, Inc.	Biomineralization of Metals	V2,130
			Pintail Systems, Inc.	Spent ore Bioremediation Process	V1,214
			Resource Management & Recovery	AlgaSORB© Biological Sorption	V2,96
		Field Portable X-ray Fluorescence	HNU Systems, Inc.	HNU Source Excited Fluorescence Analyzer-Portable (SEFA-P) X-ray Fluorescence Analyzer	V3,44
			Metorex, Inc.	Field Portable X-ray Fluorescence Analysis	V3,48
		Physical/ Chemical Treatment - Biological Degradation	Lasagna™ Public - Private Partnership	Lasagna™ In Situ Soil Remediation	V1,202
		Physical/ Chemical Radioactive Waste Treatment	Filter Flow Technology, Inc.	Colloid Polishing Filter Method	V1,76
		Physical/ Chemical Thermal Desorption	New Jersey Institute of Technology	GHEA Associates Process	V2,86
			Rochem Separation Systems, Inc.	Rochem Disc TUBE™ Module System	V1,142
		Physical/ Chemical Treatment	Atomic Energy of Canada, Limited	Chemical Treatment and Ultrafiltration	V2,22
			E.I. DuPont de Nemours and Co., and Oberlin Filter Co.	Membrane Microfiltration	V1,60
			Dynaphore, Inc.	FORAGER® Sponge	V1,62
			EPOC Water, Inc.	Precipitation, Microfiltration, and Sludge Dewatering	V1,74
			Cure International, Inc.	CURE® Electrocoagulation Wastewater Treatment System	V1,58
			Lewis Environmental Services, Inc./ Hickson Corp.	Chromated Copper Arsenate Soil Leaching Process	V2,76
			Matrix Photocatalytic Inc.	Photocatalytic Water Treatment	V1,110

APPLICABILITY INDEX (continued)

Media	Contaminants	Treatment Type	Technology Vendor	Technology	Volume, Page Number
Liquids (continued)	Metals (continued)	Physical/ Chemical Treatment (continued)	Morrison Knudsen Corp./Spetstamponazhgeologia Enterprises/STG Technologies	Clay-Base Grouting Technology	V1,114
			RECRA Environmental, Inc.	Alternating Current Electrocoagulation Technology	V2,92
			Selentec Environmental Technologies, Inc.	Selentec MAG*SEP Technology	V1,226
			U. of Washington	Adsorptive Filtration	V2,110
			U. of Wisconsin - Madison	Photoelectrocatalytic Degradation and Removal	V2,138
		Portable Gas Chromatographs	HUN Systems, Inc.	HNU GC 311D Portable Gas Chromatograph	V3,42
		Solidification/ Stabilization	Wheelabrator Clean Air Systems, Inc.	PO*WW*ER™ Technology	V1,178
		Thermal Destruction	BWX Technologies, Inc.	Cyclone Furnace	V1,44
	PAHs	Physical/ Chemical Treatment	SBP Technologies, Inc.	Membrane Filtration and Bioremediation	V1,144
		Portable Gas Chromatograph	Bruker Analytical Systems, Inc.	Mobile Environmental Monitor	V3,20
			SRI Instruments	Compact Gas Chromatograph	V3,66
	PCBs	Biological Degradation	ZENON Environmental Inc.	ZenoGem™ Process	V1,184
		Field Portable X-ray Fluorescence	Metorex, Inc.	Field portable X-ray Fluorescence Analysis	V3,48
		Physical/ Chemical Thermal Desorption	ELI Eco Logic Inc.	Gas-Phase Chemical Reduction Process	V1,68
			KAI Technologies, Inc./Brown and Root Environmental	Radio Frequency Heating	V1,106
			New Jersey Institute of Technology	GHEA Associates Process	V2,86
			SoilTech ATP Systems, Inc.	Anaerobic Thermal Processor	V1,150
		Physical/ Chemical Treatment	Calgon Carbon Oxidation Technologies	perox-pure™ Chemical Oxidation Technology	V1,46
			CF Systems Corp.	Liquified Gas Solvent Extraction (LG-SX) Technology	V1,48
			High Voltage Environmental Applications, Inc.	High Energy Electron Beam Irradiation	V2,54
			High Voltage Environmental Applications, Inc.	High Energy Beam Irradiation	V1,94
			Matrix Photocatalytic Inc.	Photocatalytic Water Treatment	V1,110
			Morrison Knudsen Corp./Spetstamponazhgeologia Enterprises/STG Technologies	Clay-Base Grouting Technology	V1,114

APPLICABILITY INDEX (continued)

Media	Contaminants	Treatment Type	Technology Vendor	Technology	Volume, Page Number
Liquids (continued)	PCBs (continued)	Physical/Chemical Treatment (continued)	SBP Technologies, Inc.	Membrane Filtration and Bioremediation	V1,144
			U.S. Filter/WTS Ultrox	Ultraviolet Radiation and Oxidations	V1,168
			U. of Wisconsin - Madison	Photoelectrocatalytic Degradation and Removal	V2,138
		Portable Gas Chromatographs	Bruker Analytical Systems, Inc.	Mobile Environmental Monitor	V3,20
			HNU Systems, Inc.	HNU GC 311D Portable Gas Chromatograph	V3,42
			Sentex Sensing Technology, inc.	Scentograph Plus II Portable Gas Chromatograph	V3,60
			SRI Instruments	Compact Gas Chromatograph	V3,66
			U.S. EPA	Field Analytical Screening Program - PCB Method	V3,78
		Solidification/ Stabilization	Wheelabrator Clean Air Systems, Inc.	PO*WW*ER™ Technology	V1,178
		Spectrometers	Graseby Ionics, Ltd., and PCP, Inc.	Ion Mobility Spectrometry	V3,36
		Test Kits	Strategic Diagnostic, Inc.	Ensys Penta Test System	V3,68
			Hanby Environmental Laboratory Procedures, Inc.	Test Kits for Organic Contaminants in Soil and Water	V3,38
		Thermal Destruction	BWX Technologies, Inc.	Cyclone Furnace	V1,44
			U. of Dayton Research Institute	Photothermal Detoxification Unit	V2,106
	PCP	Physical/ Chemical Treatment	SBP Technologies, Inc.	Membrane Filtration and Bioremediation	V1,144
			U.S. Filter/WTS Ultrox	Ultraviolet Radiation and Oxidation	V1,168
		Test Kits	Strategic Diagnostic, Inc.	Ensys Penta Test System	V3,68
			Strategic Diagnostic, Inc. Corp.	RaPID Assay®	V3,72
	Pesticides	Biological Degradation	Biotrol®	Biological Aqueous Treatment System	V1,38
			Electrokinetics, Inc.	In Situ Bioremediation by Electrokinetic Injections	V2,120
			ZENON Environmental Inc.	ZenoGem™ Process	V1,184
		Physical/ Chemical Thermal Desorption	ELI Eco Logic Inc.	Gas-Phase Chemical Reduction Process	V1,68
			KAI Technologies, Inc./Brown and Root Environmental	Radio Frequency heating	V1,106
			SoilTech ATP Systems, Inc.	Anaerobic Thermal Process	V1,150
		Physical/ Chemical Treatment	Calgon Carbon Oxidation Technologies	perox-pure™ Chemical Oxidation Technology	V1,46
			CF Systems Corp.	Liquified Gas Solvent Extraction (LG-SX) Technology	V1,48

APPLICABILITY INDEX (continued)

Media	Contaminants	Treatment Type	Technology Vendor	Technology	Volume, Page Number
Liquids (continued)	Pesticides (continued)	Physical/ Chemical Treatment (continued)	High Voltage Environmental Applications, Inc.	High-Energy Electron Beam Irradiation	V2,54
			High Voltage Environmental Applications, Inc.	High-Energy Electron Irradiation	V1,94
			Matrix Photocatalytic Inc.	Photocatalytic Water Treatment	V1,110
			Morrison Knudsen Corp./Spetstamponazhgeologia Enterprises/STG Technologies	Clay-Base Grouting Technology	V1,114
			SBP Technologies, Inc.	Membrane Filtration and Bioremediation	V1,144
			U.S. Filter/WTS Ultrox	Ultraviolet Radiation and Oxidation	V1,168
			U. of Wisconsin - Madison	Photoelectrocatalytic Degradation and Removal	V2,138
		Portable Gas Chromatographs	Bruker Analytical Systems, Inc.	Mobile Environmental Monitor	V3,20
			Sentex Sensing Technology, Inc.	Scentograph Plus II Portable Gas Chromatograph	V3,60
			SRI Instruments	Compact Gas Chromatograph	V3,66
			U.S. EPA	Field Analytical Screening Program - PCB Method	V3,78
		Solidification/ Stabilization	Wheelabrator Clean Air Systems, Inc.	PO*WW*ER™ Technology	V1,178
		Spectrometers	Graseby Ionics, Ltd., and PCP, Inc.	Ion Mobility Spectrometry	V3,36
		Test Kits	Strategic Diagnostic, Inc.	Ensys Penta Test System	V3,68
			Hanby Environmental Laboratory Procedure, Inc.	Test Kits for Organic Contaminants in Soil and Water	V3,38
			Strategic Diagnostic, Inc. Corp.	RaPID Assay®	V3,72
		Thermal Destruction	BWX Technologies, Inc.	Cyclone Furnace	V1,44
			U. of Dayton Research Institute	Photothermal Detoxification Unit	V2,106
	Petroleum Hydrocarbons	Materials Handling	National Risk Management Research Laboratory, The U. of Cincinnati, and FRX, Inc.	Hydraulic Fracturing	V1,124
		Physical/ Chemical Thermal Desorption	New Jersey Institute of Technology	GHEA Associates Process	V2,86
		Physical/ Chemical Treatment	Calgon Carbon Oxidation Technologies	perox-pure™ Chemical Oxidation Technology	V1,46
			SBP Technologies, Inc.	Membrane Filtration and Bioremediation	V1,144

APPLICABILITY INDEX (continued)

Media	Contaminants	Treatment Type	Technology Vendor	Technology	Volume, Page Number
Liquids (continued)	Petroleum Hydrocarbons (continued)	Portable Gas Chromatographs	SRI Instruments	Compact Gas Chromatograph	V3,66
	Radionuclides	Physical/ Chemical Radioactive Waste Treatment	Filter Flow Technology, Inc.	Colloid Polishing Filter Method	V1,76
		Physical/ Chemical Treatment	Atomic Energy of Canada, Limited	Chemical Treatment and Ultrafiltration	V2,22
			Selentec Environmental Technologies, Inc.	Selentec MAG*SEP Technology	V1,226
		Thermal Destruction	BWX Technologies, Inc.	Cyclone Furnace	V1,44
	SVOCs	Biological Degradation	Harding Lawson Associates	Two-Zone, Plume Interception, In Situ Treatment Technology	V2,48
			Biotrol®	Biological Aqueous Treatment System	V1,38
			New York State Dept. Of Environmental Conservation/R.E. Wright Environmental Inc.	In Situ Bioventing Treatment System	V1,130
			IT Corp.	Oxygen Microbubble In Situ Bioremediation	V2,126
			ZENON Environmental Inc.	ZenoGem™ Process	V1,184
		Physical/ Chemical Thermal Desorption	ELI Eco Logic Inc.	Gas-Phase Chemical Reduction Process	V1,68
			KAI Technologies, Inc./Brown and Root Environmental	Radio Frequency Heating	V1,106
			New Jersey Institute of Technology	GHEA Associates Process	V2,86
			SoilTech ATP Systems, Inc.	Anaerobic Thermal Processor	V1,150
		Physical/ Chemical Treatment	ARS Technologies, Inc.	Pneumatic Fracturing Extraction™ and Catalytic Oxidation	V1,24
			Calgon Carbon Oxidation Technologies	perox-pure™ Chemical Oxidation Technology	V1,46
			CF Systems Corp.	Liquified Gas Solvent Extraction (LG-SX) Technology	V1,48
			High Voltage Environmental Applications, Inc.	High-Energy Electron Beam Irradiation	V2,54
			High Voltage Environmental Applications, Inc.	High-Energy Electron Irradiation	V1,94
			Pulse Sciences, Inc.	X-ray Treatment of Aqueous Solutions	V2,90
			SBP Technologies, Inc.	Membrane Filtration and Bioremediation	V1,144

APPLICABILITY INDEX (continued)

Media	Contaminants	Treatment Type	Technology Vendor	Technology	Volume, Page Number
Liquids (continue)	SVOCs (continued)	Physical/Chemical Treatment (continued)	Terra Vac, Inc.	In Situ and Ex Situ Vacuum Extraction	V1,160
			U. of Wisconsin - Madison	Photoelectrocatalytic Degradation and Removal	V2,138
			Roy F. Weston, Inc./IEG Technologies	UVB - Vacuum Vaporizing Well	V1,176
			Xerox Corp.	2-PHASE™ EXTRACTION Process	V1,180
		Portable Gas Chromatographs	Analytical and Remedial Technology, Inc.	Automated Sampling and Analytical Platform	V3,14
			Bruker Analytical Systems, Inc.	Mobile Environmental Monitor	V3,20
			U.S. EPA	Field Analytical Screening Program - PCB Method	V3,78
		Solidification/ Stabilization	Wheelabrator Clean Air Systems, Inc.	PO*WW*ER™ Technology	V1,178
		Spectrometers	Graseby Ionics, Ltd., and PCP, Inc.	Ion Mobility Spectrometry	V3,36
		Test Kits	Strategic Diagnostic, Inc. Corp.	RaPID Assay®	V3,72
		Thermal Destruction	BWX Technologies, Inc.	Cyclone Furnace	V1,44
			Texaco Inc.	Texaco Gasification process	V1,162
		Other	U. of Dayton Research Institute	Photothermal Detoxification Unit	V2,106
			Berkeley Environmental Restoration Center	In Situ Steam Enhanced Extraction Process	V1,28
	VOCs	Biological Degradation	Billings and Associates, Inc.	Subsurface Volatilization and Ventilation System (SVVS®)	V1,30
			Bio-Rem, Inc.	Augmented In Situ Subsurface Bioremediation Process	V1,34
			Biotrol®	Biological Aqueous Treatment System	V1,38
			Electrokinetics, Inc.	In Situ Bioremediation by Electrokinetic Injection	V2,120
			New York State Dept. of Environmental Conservation/R.E. Wright Environmental, Inc.	In Situ Bioventing Treatment System	V1,130
			IT Corp.	Oxygen Microbubble In Situ Bioremediation	V2,126
			U.S. Air Force	Phytoremediation of TCE-Contaminated Shallow Groundwater	V1,234
			ZENON Environmental inc.	ZenoGem™ Process	V1,184
		Materials Handling	National Risk Management Research Laboratory, The U. of Cincinnati, and FRX, Inc.	Hydraulic Fracturing	V1,124

APPLICABILITY INDEX (continued)

Media	Contaminants	Treatment Type	Technology Vendor	Technology	Volume, Page Number
Liquids (continued)	VOCs (continued)	Physical/ Chemical Thermal Desorption	Hughes Environmental Systems, Inc.	Steam Enhanced Recovery Process	V1,100
			KAI Technologies, Inc./Brown and Root Environmental	Radio Frequency Heating	V1,106
			New Jersey Institute of Technology	GHEA Associates Process	V2,86
			Rochem Separation Systems, Inc.	Rochem Disc Tube™ Module System	V1,142
			SoilTech ATP Systems, Inc.	Anaerobic Thermal Processor	V1,150
		Physical/ Chemical Treatment	ARS Technologies, Inc.	Pneumatic Fracturing Extraction™ and Catalytic Oxidation	V1,24
			Arizona State U./ Zentox Corp.	Photocatalytic Oxidation with Air Stripping	V2,18
			Calgon Carbon Oxidation Technologies	perox-pure™ Chemical Oxidation Technology	V1,46
			CF Systems Corp.	Liquified Gas Solvent Extraction (LG-SX) Technology	V1,48
			Radian International LCC	Integrated Vapor Extraction and Steam Vacuum Stripping and Soil Vapor Extraction/Reinjection	V1,138
			High Voltage Environmental Applications, Inc.	High Energy Electron Irradiation	V1,94
			KSE, Inc.	Adsorption-Integrated-Reaction Process	V1,200/ V2,24
			Matrix Photocatalytic Inc.	Photocatalytic Water Treatment	V1,110
			Morrison Knudsen Corp./Spetstamponazhgeologia Enterprises/STG Technologies	Clay-Base Grouting Technology	V1,114
			Pulse Sciences, Inc.	X-ray Treatment of Aqueous Solutions	V2,90
			SBP Technologies, Inc.	Membrane Filtration and Bioremediation	V1,144
			Terra Vac, Inc.	In Situ and Ex Situ Vacuum Extraction	V1,160
			U.S. Filter/WTS Ultrox	Ultraviolet Radiation and Oxidation	V1,168
			U. of Nebraska - Lincoln	Center Pivot Spray Irrigation System	V1,170
			UV Technologies, Inc.	PhotoCAT™ Process	V2,112
			Roy F. Weston, Inc.	Ambersorb® 563 Adsorbent	V2,116
			Roy F. Weston, Inc./IEG Technologies	UVB - Vacuum Vaporizing Well	V1,176
			Xerox Corp.	2-PHASE™ EXTRACTION Process	V1,180
			ZENON Environmental Inc.	Cross-Flow Pervaporation System	V1,182
		Portable Gas Chromatographs	Bruker Analytical Systems, Inc.	Mobile Environmental Monitor	V3,20

APPLICABILITY INDEX (continued)

Media	Contaminants	Treatment Type	Technology Vendor	Technology	Volume, Page Number
Liquids (continued)	VOCs (continued)	Portable Gas Chromatographs (continued)	HNU Systems, Inc.	HNU GC 311D Portable Gas Chromatograph	V3,42
			Photovac Monitoring Instruments	PE Photovac Voyager Portable Gas Chromatograph	V3,56
			Sentex Sensing Technology, inc.	Scentograph Plus II Portable Gas Chromatograph	V3,60
			SRI Instruments	Compact Gas Chromatograph	V3,66
			U.S. EPA	Field Analytical Screening Program - PCB Method	V3,78
		Solidification/ Stabilization	Wheelabrator Clean Air Systems, Inc.	PO*WW*ER™ Technology	V1,178
		Spectrometers	Graseby Ionics, Ltd., and PCP, Inc.	Ion Mobility Spectrometry	V3,36
		Test Kits	Hanby Environmental Laboratory Procedure, Inc.	Test Kits for Organic Contaminants in Soil and Water	V3,38
			Strategic Diagnostic, Inc. Corp.	RaPID Assay®	V3,72
		Thermal Destruction	Texaco Inc.	Texaco Gasification Process	V1,162
		Other	Berkeley Environmental Restoration Center	In Situ Steam Enhanced Extraction Process	V1,28
	Other	Physical/ Chemical Treatment	North American Technologies Group, Inc.	Oleophilic Amine-Coated Ceramic Chip	V1,132
			RECRA Environmental, Inc.	Alternating Electrocoagulation Technology	V2,92
Mine Tailings	Metals	Materials Handling Solidification/Stabilization	U. of South Carolina	In Situ Mitigation of Acid Water	V2,108
			Rocky Mountain Remediation Services, L.L.C.	Envirobond Solution	V1,222
			Star Organics, L.L.C.	Soil Rescue Remediation Fluid	V1,232
Sediment	Aromatic VOCs	Biological Degradation	Bio-Rem Inc.	Augmented In Situ Subsurface Bioremediation Process	
			Electrokinetics, Inc.	In Situ Bioremediation by Electrokinetic Injection	V2,120
			GRACE Bioremediation Technologies	DARAMEND™ Bioremediation Technology	V1,90
			Institute of Gas Technology	Fluid Extraction - Biological Degradation Process	V2,58
			New York State Dept. Of Environmental Conservation/ENSR Consulting and Larsen Engineers	Ex Situ Biovault	V1,126
			New York State Dept. Of Environmental Conservation/R.E. Wright Environmental, Inc.	In Situ Bioventing Treatment System	V1,130

APPLICABILITY INDEX (continued)

Media	Contaminants	Treatment Type	Technology Vendor	Technology	Volume, Page Number
Sediment (continued)	Aromatic VOCs (continued)	Biological Degradation (continued)	IT Corp.	Oxygen Microbubble In Situ Bioremediation	V2,126
		Materials Handling	U.S. EPA	Excavation Techniques and Foam Suppression Methods	V1,166
		Physical/ Chemical Thermal Desorption	Biotherm, LCC	Biotherm Process	V1,36
			Maxymillian Technologies, Inc.	Thermal Desorption System	V1,112
			NOVATERRA, Inc.	In-Situ Soil Treatments (Steam/ Air Stripping)	V1,134
			Recycling Sciences International, Inc.	Desorption and Vapor Extraction System	V1,220
			Roy F. Weston, Inc.	Low Temperature Thermal Treatment (LT3®) System	V1,174
		Physical/ Chemical Treatment	Bergmann, A Division of Linatex, Inc.	Soil and Sediment Washing	V1,26
			CF Systems Corp.	Liquified Gas Solvent Extraction (LG-SX) Technology	V1,48
			Electrokinetics, Inc.	Electrokinetic Soil Processing	V1,66
			High Voltage Environmental Applications, Inc.	High Energy Electron Beam Irradiation	V2,54
			High Voltage Environmental Applications, Inc.	High Energy Electron Irradiation	V1,94
			Institute of Gas Technology	Supercritical Extraction/Liquid Phase Oxidation	V2,62
			Ionics RCC	B.E.S.T. Solvent Extraction Technology	V1,104
			IT Corp.	Mixed Waste Treatment Process	V2,68
			Terra Vac, Inc.	In Situ and Ex Situ Vacuum Extraction	V1,160
		Portable Gas Chromatographs	Bruker Analytical Systems, Inc.	Mobile Environmental Monitor	V3,20
			U.S. EPA	Field Analytical Screening Program - PCB Method	V3,78
		Solidification/ Stabilization	Geo-Con, Inc.	In Situ Solidification and Stabilization Process	V1,82
			Rocky Mountain Remediation Services, L.L.C.	Envirobond Solution	V1,222
			Star Organics, L.L.C.	Soil Rescue Remediation Fluid	V1,232
			WASTECH, Inc.	Solidification and Stabilization	V1,172
			Western Product Recovery Group, Inc.	Coordinate, Chemical Bonding, and Adsorption Treatment	V2,114
		Spectrometers	Graseby Ionics, Ltd., and PCP, Inc.	Ion Mobility Spectrometry	V3,36
		Thermal Destruction	Sonotech, Inc.	Frequency-Turnable Pulse Combustion System	V1,154
			Texaco Inc.	Texaco Gasification Process	V1,162

APPLICABILITY INDEX (continued)

Media	Contaminants	Treatment Type	Technology Vendor	Technology	Volume, Page Number
Sediment (continued)	Aromatic VOCs (continued)	Thermal Destruction (continued)	U. of Dayton Research Institute	Photothermal Detoxification Unit	V2,106
			Vortec Corp.	Vitrification Process	V1,236
	Cyanide	Biological Degradation	Pintail Systems, Inc.	Spent Ore Bioremediation Process	V1,214
	Dioxins	Biological Degradation	Biotrol®	Soil Washing System	V1,40
			Institute of Gas Technology	Fluid Extraction - Biological Degradation Process	V2,58
		Materials Handling	U.S. EPA	Excavation Techniques and Foam Suppression Methods	V1,166
		Physical/ Chemical Thermal Desorption	ELI Eco Logic Inc.	Gas-Phase Chemical Reduction Process	V1,68
			ELI Eco Logic International Inc.	Thermal Desorption Unit	V1,70
			Recycling Sciences International, Inc.	Desorption and Vapor Extraction System	V1,220
			Roy F. Weston, Inc.	Low Temperature Thermal Treatment (LT3®) System	V1,174
		Physical/ Chemical Treatment	ART International, Inc.	Low-Energy Extraction Process (LEEP)	V2,20
			CF Systems Corp.	Liquified Gas Solvent Extraction (LG-SX) Technology	V1,48
			High Voltage Environmental Applications, Inc.	High Energy Electron Irradiation	V1,94
			Ionics RCC	B.E.S.T. Solvent Extraction Technology	V1,104
			IT Corp.	Mixed Waste Treatment Process	V2,68
			National Risk Management Research Laboratory and IT Corp.	Base-Catalyzed Decomposition Process	V1,116
			National Risk Management Research Laboratory and IT Corp.	Debris Washing System	V1,122
			Terra-Kleen Response Group	Solvent Extraction Treatment System	V1,158
			Trinity Environmental Technologies, Inc.	PCB- and Organochlorine-Contaminated Soil Detoxification	V2,104
		Portable Gas Chromatographs	Bruker Analytical Systems, Inc.	Mobile Environmental Monitor	V3,20
		Solidification/ Stabilization	Geosafe Corp.	GeoMelt Vitrification	V1,84
			WASTECH, Inc.	Solidification and Stabilization	V1,172
		Spectrometers	Graseby Ionics, Ltd., and PCP, Inc.	Ion Mobility Spectrometry	V3,36
		Test Kits	Strategic Diagnostic, Inc. Corp.	RaPID Assay®	V3,72
		Thermal Desorption	BWX Technologies, Inc.	Cyclone Furnace	V1,44

APPLICABILITY INDEX (continued)

Media	Contaminants	Treatment Type	Technology Vendor	Technology	Volume, Page Number
Sediment (continued)	Dioxins (continued)	Thermal Desorption (continued)	Energy and Environmental Research Corp.	Reactor Filter system	V2,42
			Institute of Gas Technology	Fluidized-Bed/Cyclonic Agglomerating Combustor	V2,60
			U. of Dayton Research Institute	Photothermal Detoxification Unit	V2,106
			Vortec Corp.	Vitrification Process	V1,236
	Explosives	Biological Degradation	J.R. Simplot Co.	The SABRE™ Process	V1,66
		Physical/ Chemical Thermal Desorption	New Jersey Institute of Technology	GHEA Associates Process	V2,86
	Furans	Biological Degradation	Biotrol®	Soil Washing System	V1,40
			Institute of Gas Technology	Fluid Extraction - Biological Degradation Process	V2,58
		Materials Handling	U.S. EPA	Excavation Techniques and Foam Suppression Methods	V1,166
		Physical/ Chemical Thermal Desorption	ELI Eco Logic Inc.	Gas-Phase Chemical Reduction Process	V1,68
			ELI Eco Logic International Inc.	Thermal Desorption Unit	V1,70
			Recycling Sciences International, Inc.	Desorption and Vapor Extraction System	V1,220
			Roy F. Weston, Inc.	Low Temperature Thermal Treatment (LT3®) System	V1,174
		Physical/ Chemical Treatment	ART International, Inc.	Low-Energy Extraction Process (LEEP)	V2,20
			CF Systems Corp.	Liquified Gas Solvent Extraction (LG-SX) Technology	V1,48
			High Voltage Environmental Applications, Inc.	High Energy Electron Irradiation	V1,94
			Ionics RCC	B.E.S.T. Solvent Extraction Technology	V1,104
			IT Corp.	Mixed Waste Treatment Process	V2,68
			National Risk Management Research Laboratory and IT Corp.	Base-Catalyzed Decomposition Process	V1,116
			National Risk Management Research Laboratory and IT Corp.	Debris Washing System	V1,122
			Terra-Kleen Response Group	Solvent Extraction Treatment System	V1,158
			Trinity Environmental Technologies, Inc.	PCB- and Organochlorine-Contaminated Soil Detoxification	V2,104
		Portable Gas Chromatographs	Bruker Analytical Systems, Inc.	Mobile Environmental Monitor	V3,20
		Solidification/ Stabilization	Geosafe Corp.	GeoMelt Vitrification	V1,84
			WASTECH, Inc.	Solidification and Stabilization	V1,172

APPLICABILITY INDEX (continued)

Media	Contaminants	Treatment Type	Technology Vendor	Technology	Volume, Page Number
Sediment (continued)	Furans (continued)	Spectrometers	Graseby Ionics, Ltd., and PCP, Inc.	Ion Mobility Spectrometry	V3,36
		Test Kits	Strategic Diagnostic, Inc. Corp.	RaPID Assay®	V3,72
		Thermal Desorption	BWX Technologies, Inc.	Cyclone Furnace	V1,44
			Energy and Environmental Research Corp.	Reactor Filter system	V2,42
			Institute of Gas Technology	Fluidized-Bed/Cyclonic Agglomerating Combustor	V2,60
			U. of Dayton Research Institute	Photothermal Detoxification Unit	V2,106
			Vortec Corp.	Vitrification Process	V1,236
	Halogenated VOCs	Biological Degradation	Biotrol®	Soil Washing System	V1,40
			Electrokinetics, Inc.	In Situ Bioremediation by Electrokinetic Injection	V2,120
			GRACE Bioremediation Technologies	DARAMEND™ Bioremediation Technology	V1,90
			Institute of Gas Technology	Fluid Extraction - Biological Degradation Process	V2,58
			J.R. Simplot Co.	The SABRE™ Process	V1,66
		Materials Handling	U.S. EPA	Excavation Techniques and Foam Suppression Methods	V1,166
		Physical Chemical Treatment - Biological Degradation	Lasagna™ Public - Private Partnership	Lasagna™ In Situ Remediation	V1,202
		Physical/ Chemical Thermal Desorption	ELI Eco Logic Inc.	Gas-Phase Chemical Reduction Process	V1,68
			ELI Eco Logic International Inc.	Thermal Desorption Unit	V1,70
			Maxymillian Technologies, Inc.	Thermal Desorption System	V1,112
			OHM Remediation Services Corp.	X*TRAX™ Thermal Desorption	V1,136
			Recycling Sciences International, Inc.	Desorption and Vapor Extraction System	V1,220
			Smith Environmental Technologies Corp.	Low Temperature Thermal Aeration (LTTA®)	V1,148
			Roy F. Weston, Inc.	Low Temperature Thermal Treatment (LT3®) System	V1,174
		Physical/ Chemical Treatment	ART International, Inc.	Low-Energy Extraction Process (LEEP)	V2,20
			Bergmann, A Division of Linatex, Inc.	Soil and Sediment Washing	V1,26
			CF Systems Corp.	Liquified Gas Solvent Extraction (LG-SX) Technology	V1,48
			High Voltage Environmental Applications, Inc.	High Energy Electron Irradiation	V1,94

APPLICABILITY INDEX (continued)

Media	Contaminants	Treatment Type	Technology Vendor	Technology	Volume, Page Number
Sediment (continued)	Halogenated VOCs (continued)	Pysical/Chemical Treatment (continued)	Ionics RCC	B.E.S.T. Solvent Extraction Technology	V1,104
			IT Corp.	Mixed Waste Treatment Process	V2,68
			National Risk Management Research Laboratory	Base-Catalyzed Decomposition Process	V1,116
			National Risk Management Research Laboratory and IT Corp.	Debris Washing System	V1,122
		Portable Gas Chromatographs	Bruker Analytical Systems, Inc.	Mobile Environmental Monitor	V3,20
		Solidification/ Stabilization	Chemfix Technologies, Inc.	Solidification and Stabilization	V1,50
			WASTECH, Inc.	Solidification and Stabilization	V1,172
		Spectrometers	Graseby Ionics, Ltd., and PCP, Inc.	Ion Mobility Spectrometry	V3,36
		Test Kits	Strategic Diagnostic, Inc. Corp.	RaPID Assay®	V3,72
		Thermal Destruction	BWX Technologies, Inc.	Cyclone Furnace	V1,44
			U. of Dayton Research Institute	Photothermal Detoxification Unit	V2,106
			Vortec Corp.	Vitrification Process	V1,236
	Mercury	Contaminant Survey systems	Quadrel Srvices, Inc.	Emflux Soil-Gas Survey System	V3,54
			Radiometer Analytical Group	Anodic Stripping Voltammetry for Mercury in Soil	V3,58
		Physical/ Chemical Treatment	Bionebraska, Inc.	BiMelyze® Mercury Immunoassay	V3,18
	Metals	Biological Degradation	Geo-Microbial Technologies, inc.	Metals Release and Removal from Wastes	V2,124
			Phytotech	Phytoremediation Technology	V1,212
			Pintail Systems, Inc.	Biomineralization of Metals	V2,130
			Pintail Systems, Inc.	Spent ore Bioremediation Process	V1,214
		Field Portable X-ray Fluorescence	NITON Corp.	XL Spectrum Analyzer	V3,52
			C-THRU Technologies Corporation	Metal Analysis Probe (MAP®) Portable Assayer	V3,22
			TN Spectrace	9000 X-Ray Fluorescence Analyzer and Lead X-Ray Fluorescence Analyzer	V3,74
		Materials Handling	AEA Technology Environment	Soil Separation and Washing Process	V2,16
			Montana College of Mineral Science and Technology	Campbell Centrifugal Jig	V2,84
			U.S. EPA	Excavation Techniques and Foam Suppression Methods	V1,166
			U. of South Carolina	In Situ Mitigation of Acid Water	V2,108

APPLICABILITY INDEX (continued)

Media	Contaminants	Treatment Type	Technology Vendor	Technology	Volume, Page Number
Sediment (continued)	Metals (continued)	Physical Chemical Treatment - Biological Degradation	Lasagna™ Public - Private Partner ship	Lasagna™ In Situ Soil Remediation	V1,202
		Physical/ Chemical Thermal Desorption	New Jersey Institute of Technology	GHEA Associates Process	V2,86
		Physical/ Chemical Treatment	Bergmann, A Division of Linatex, Inc.	Soil and Sediment Washing	V1,26
			BioGenesis Enterprises, Inc.	BioGenesisSM Soil and Sediment Washing	V1,32
			Center for Hazardous Materials Research	Acid Extraction Treatment System	V2,30
			COGNIS, Inc.	TERRAMET Soil Remediation System	V1,52
			Dynaphore, Inc.	FORAGER® Sponge	V1,62
			Electrokinetics, Inc.	Electrokinetic Soil Processing	V1,66
			General Atomics, Nuclear Remediation Technologies Div.	Acoustic Barrier Particulate Separator	V2,48
			IT Corp.	Batch Steam Distillation and Metal Extraction	V2,64
			IT Corp.	Chelation/Electrodeposition of Toxic Metals from Soils	V2,66
			IT Corp.	Mixed Waste Treatment Process	V2,68
			National Risk Management Research Laboratory and IT Corp.	Debris Washing System	V1,122
			Selentec Environmental Technologies, Inc.	Selentec MAG*SEP Technology	V1,226
			Toronto Harbour Commission	Soil Recycling	V1,162
		Solidification/ Stabilization	Chemfix Technologies, Inc.	Solidification and Stabilization	V1,50
			Ferro Corp.	Waste Vitrification Through Electric Melting	V2,46
			Funderburk & Associates	Dechlorination and Immobilization	V1,78
			Geo-Con, Inc.	In Situ Solidification and Stabilization Process	V1,82
			Geosafe Corp.	GeoMelt Vitrification	V1,84
			Sevenson Environmental Services, Inc.	MAECTITE® Chemical Treatment Process	V3,60
			Soliditech, inc.	Solidification and Stabilization	V1,152
			STC Remediation, A Division of Omega Environmental, Inc.	Organic Stabilization and Chemical Fixation/ Solidification	V1,156
			WASTECH, Inc.	Solidification and Stabilization	V1,172
			Western Product Recovery Group, Inc.	Coordinate, Chemical Bonding, and Adsorption Treatment	V2,114

APPLICABILITY INDEX (continued)

Media	Contaminants	Treatment Type	Technology Vendor	Technology	Volume, Page Number
Sediment (continued)	Metals (continued)	Thermal Destruction	BWX Technologies, Inc.	Cyclone Furnace	V1,44
			Energy and Environmental Research Corp.	Hybrid Fluidized Bed System	V2,40
			Energy and Environmental Research Corp.	Reactor Filter System	V2,42
			Horsehead Resource Development Co., Inc.	Flame Reactor	V1,96
			Institute of Gas Technology	Fluidized-Bed/Cyclonic Agglomerating Combustor	V2,60
			Vortec Corp.	Vitrification Process	V1,236
	Organics	Thermal Destruction	Gruppo Italimpresse	Infared Thermal Destruction	V1,92
	PAHs	Biological Degradation	ECOVA Corp.	Bioslurry Reactor	V1,64
			Environmental BioTechnologies, Inc.	Fungal Degradation Process	V2,44
			Institute of Gas Technology	Fluid Extraction - Biological Degradation Process	V2,58
			Remediation Technologies, Inc.	Liquid and Solids Biological Treatment	V1,140
		Physical/ Chemical Thermal Desorption	Maxymillian Technologies, inc.	Thermal Desorption and Vapor Extraction System	V1,112
			Recycling Sciences International, Inc.	Desorption and Vapor Extraction System	V1,220
		Physical/ Chemical Treatment	Bergmann, A Division of Linatex, Inc.	Soil and Sediment Washing	V1,26
			BioGenesis Enterprises, Inc.	BioGenesisSM Soil and Sediment Washing Process	V1,32
		Portable Gas Chromatographs	Bruker Analytical Systems, Inc.	Mobile Environmental Monitor	V3,20
	PCBs	Biological Degradation	Institute of Gas Technology	Chemical and Biological Treatment	V2,56
			Institute of Gas Technology	Fluid Extraction - Biological Degradation Process	V2,58
			Phytokinetics, Inc.	Phytoremediation Process	V1,210
		Materials Handling	U.S. EPA	Excavation Techniques and Foam Suppression Methods	V1,166
		Physical/ Chemical Thermal Desorption	Biotherm, LCC	Biotherm Process	V1,36
			ELI Eco Logic International Inc.	Gas-Phase Chemical Reduction Process	V1,68
			ELI Eco Logic International Inc.	Thermal Desorption Unit	V1,70
			KAI Technologies, Inc./ Brown and Root Environmental	Radio Frequency Heating	V1,106
			New Jersey Institute of Technology	GHEA Associates Process	V2,86

APPLICABILITY INDEX (continued)

Media	Contaminants	Treatment Type	Technology Vendor	Technology	Volume, Page Number
Sediment (continued)	PCBs (continued)	Physical/ Chemical Thermal Desorption (continued)	OHM Remediation Services Corp.	X*TRAX™ Thermal Desorption	V1,136
			Recycling Sciences International, Inc.	Desorption and Vapor Extraction System	V1,220
			Roy F. Weston, Inc.	Low Temperature Thermal Treatment (LT3®) System	V1,174
		Physical/ Chemical Treatment	ART International, Inc.	Low-Energy Extraction Process (LEEP)	V2,20
			Bergmann, A Division of Linatex, Inc.	Soil and Sediment Washing	V1,26
			BioGenesis Enterprises, Inc.	BioGenesisSM Soil and Sediment Washing Process	V1,32
			CF Systems Corp.	Liquified Gas Solvent Extraction (LG-SX) Technology	V1,48
			Commodore Environmental Services, Inc.	Solvated Electron Remediation System	V1,56
			General Atomics	Circulating Bed Combustor	V1,80
			High Voltage Environmental Applications, Inc.	High Energy Electron Beam Irradiation	V2,54
			High Voltage Environmental Applications, Inc.	High Energy Electron Irradiation	V1,94
			Ionics RCC	B.E.S.T. Solvent Extraction Technology	V1,104
			IT Corp.	Mixed Waste Treatment Process	V2,68
			National Risk Management Research Laboratory	Base-Catalyzed Decomposition Process	V1,116
			National Risk Management Research Laboratory and IT Corp.	Debris Washing System	V1,122
			State U. of New York at Oswego, Environmental Research Center	Electrochemical Peroxidation of PCB-Contaminated Sediments and Waters	V2,98
			Terra-Kleen Response Group, Inc.	Solvent Extraction Treatment System	V1,158
			Trinity Environmental Technologies, Inc.	PCB- and Organochlorine-Contaminated Soil Detoxification	V2,104
		Portable Gas Chromatographs	Bruker Analytical Systems, Inc.	Mobile Environmental Monitor	V3,20
			U.S. EPA	Field Analytical Screening Program - PCB Method	V3,78
		Solidification/ Stabilization	Chemfix Technologies, Inc.	Solidification and Stabilization	V1,50
			Funderburk & Associates	Dechlorination and Immobilization	V1,78
			Geo-Con, Inc.	In Situ Solidification and Stabilization Process	V1,82

APPLICABILITY INDEX (continued)

Media	Contaminants	Treatment Type	Technology Vendor	Technology	Volume, Page Number
Sediment (continued)	PCBs (continued)	Solidification/ Stabilization (continued)	Geosafe Corp.	GeoMelt Vitrification	V1,84
			Soliditech, inc.	Solidification and Stabilization	V1,152
			WASTECH, Inc.	Solidification and Stabilization	V1,172
		Spectrometers	Graseby Ionics, Ltd., and PCP, Inc.	Ion Mobility Spectrometry	V3,36
		Test Kits	Strategic Diagnostic, Inc.	Ensys Penta Test System	V3,68
		Thermal Destruction	BWX Technologies, Inc.	Cyclone Furnace	V1,44
			Energy and Environmental Research Corp.	Hybrid Fluidized Bed System	V2,40
			Institute of Gas Technology	Fluidized-Bed/Cyclonic Agglomerating Combustor	V2,60
			U. of Dayton Research Institute	Photothermal Detoxification Unit	V2,106
			Vortec Corp.	Vitrification Process	V1,236
	PCP	Biological Degradation	Remediation Technologies, Inc.	Liquid and Solids Biological Treatment	V1,140
		Physical/ Chemical Thermal Desorption	Recycling Sciences International, Inc.	Desorption and Vapor Extraction System	V1,220
		Physical/ Chemical Treatment	Trinity Environmental Technologies, Inc.	PCB- and Organochlorine-Contaminated Soil Detoxification	V2,104
		Test Kits	Strategic Diagnostic, Inc.	Ensys Penta Test System	V3,68
			Strategic Diagnostic, Inc. Corp.	RaPID Assay®	V3,72
	Pesticides	Biological Degradation	Biotrol®	Soil Washing System	V1,40
			Electrokinetics, Inc.	In Situ Bioremediation by Electrokinetic Injection	V2,120
			GRACE Bioremediation Technologies	DARAMEND™ Bioremediation Technology	V1,90
			Institute of Gas Technology	Chemical and Biological Treatment	V2,56
			Institute of Gas Technology	Fluid Extraction - Biological Degradation Process	V2,58
			Phytokinetics, Inc.	Phytoremediation Process	V1,210
		Materials Handling	U.S. EPA	Excavation Techniques and Foam Suppression Methods	V1,166
		Physical/ Chemical Thermal Desorption	Biotherm, LCC	Biotherm Process	V1,36
			ELI Eco Logic Inc.	Gas-Phase Chemical Reduction Process	V1,68
			ELI Eco Logic International Inc.	Thermal Desorption Unit	V1,70
			KAI Technologies, Inc./ Brown and Root Environmental	Radio Frequency Heating	V1,106
			OHM Remediation Services Corp.	X*TRAX™ Thermal Desorption	V1,136

APPLICABILITY INDEX (continued)

Media	Contaminants	Treatment Type	Technology Vendor	Technology	Volume, Page Number
Sediment (continued)	Pesticides (continued)	Physical/Chemical Thermal Desorption (continued)	Recycling Sciences International, Inc.	Desorption and Vapor Extraction System	V1,220
			Smith Environmental Technologies Corp.	Low Temperature Thermal Aeration (LTTA®)	V1,148
			Roy F. Weston, Inc.	Low Temperature Thermal Treatment (LT3®) System	V1,174
		Physical/ Chemical Treatment	ART International, Inc.	Low-Energy Extraction Process (LEEP)	V2,20
			Bergmann, A Division of Linatex, Inc.	Soil and Sediment Washing	V1,26
			CF Systems Corp.	Liquified Gas Solvent Extraction (LG-SX) Technology	V1,48
			Commodore Environmental Services, Inc.	Solvated Electron Remediation System	V1,56
			Electrokinetics, Inc.	Electrokinetic Soil Processing	V1,66
			General Atomics	Circulating Bed Combustor	V1,80
			High Voltage Environmental Applications, Inc.	High Energy Electron Beam Irradiation	V2,54
			High Voltage Environmental Applications, Inc.	High Energy Electron Irradiation	V1,94
			Ionics RCC	B.E.S.T. Solvent Extraction Technology	V1,104
			IT Corp.	Mixed Waste Treatment Process	V2,68
			National Risk Management Research Laboratory	Base-Catalyzed Decomposition Process	V1,116
			National Risk Management Research Laboratory and IT Corp.	Debris Washing System	V1,122
			State U. of New York at Oswego, Environmental Research Center	Electrochemical Peroxidation of PCB-Contaminated Sediments and Waters	V2,98
			Terra-Kleen Response Group, Inc.	Solvent Extraction Treatment System	V1,158
			Trinity Environmental Technologies, Inc.	PCB- and Organochlorine-Contaminated Soil Detoxification	V2,104
		Portable Gas Chromatographs	Bruker Analytical Systems, Inc.	Mobile Environmental Monitor	V3,20
			U.S. EPA	Field Analytical Screening Program - PCB Method	V3,78
		Solidification/ Stabilization	Chemfix Technologies, Inc.	Solidification and Stabilization	V1,50
			Funderburk & Associates	Dechlorination and Immobilization	V1,78
			Geo-Con, Inc.	In Situ Solidification and Stabilization Process	V1,82
			Geosafe Corp.	GeoMelt Vitrification	V1,84

APPLICABILITY INDEX (continued)

Media	Contaminants	Treatment Type	Technology Vendor	Technology	Volume, Page Number
Sediment (continued)	Pesticides (continued)	Solidification/ Stabilization (continued)	Soliditech, inc.	Solidification and Stabilization	V1,152
			WASTECH, Inc.	Solidification and Stabilization	V1,172
		Spectrometers	Graseby Ionics, Ltd., and PCP, Inc.	Ion Mobility Spectrometry	V3,36
		Test Kits	Strategic Diagnostic, Inc.	Ensys Penta Test System	V3,68
			Strategic Diagnostic, Inc. Corp.	RaPID Assay®	V3,72
		Thermal Destruction	BWX Technologies, Inc.	Cyclone Furnace	V1,44
			Energy and Environmental Research Corp.	Hybrid Fluidized Bed System	V2,40
			Institute of Gas Technology	Fluidized-Bed/Cyclonic Agglomerating Combustor	V2,60
			U. of Dayton Research Institute	Photothermal Detoxification Unit	V2,106
			Vortec Corp.	Vitrification Process	V1,236
	Petroleum Hydrocarbons	Biological Degradation	ECOVA Corp.	Bioslurry Reactor	V1,64
			Remediation Technologies, Inc.	Liquid and Solids Biological Treatment	V1,140
		Physical/ Chemical Thermal Desorption	New Jersey Institute of Technology	GHEA Association process	V2,86
			Smith Environmental Technologies Corp.	Low Temperature Thermal Aeration (LTTA®)	V1,148
		Solidification/ Stabilization	Soliditech, Inc.	Solidification and Stabilization	V1,152
	Radionuclides	Materials Handling	Thermo Nutech, Inc.	Segmented Gate System	V2,134
		Physical/ Chemical Treatment	Bergmann, A Division of Linatex, Inc.	Soil and Sediment Washing	V1,26
			IT Corp.	Mixed Waste Treatment Process	V2,68
			Selentec Environmental Technologies, Inc.	Selentec MAG*SEP Technology	V1,226
		Solidification/ Stabilization	Sevenson Environmental Services, Inc.	MAECTITE® Chemical Treatment Process	V1,228
			WASTECH, Inc.	Solidification and Stabilization	V1,172
		Thermal Destruction	BWX Technologies, Inc.	Cyclone Furnace	V1,44
	SVOCs	Biological Degradation	Biotrol®	Soil Washing System	V1,40
			ECOVA Corp.	Bioslurry Reactor	V1,64
			GRACE Bioremediation Technologies	DARAMEND™ Bioremediation Technology	V1,90
			Institute of Gas Technology	Chemical and Biological Treatment	V2,56
			Institute of Gas Technology	Fluid Extraction - Biological Degradation Process	V2,58
			IT Corp.	Tekno Associates Bioslurry Reactor	V2,72

APPLICABILITY INDEX (continued)

Media	Contaminants	Treatment Type	Technology Vendor	Technology	Volume, Page Number
Sediment (continued)	SVOCs (continued)	Biological Degradation (continued)	New York State Dept. Of Environmental Conservation/ENSR Consulting and Larsen Engineers	Ex-Situ Biovault	V1,126
			New York State Dept. Of Environmental Conservation/R.E. Wright Environmental, Inc.	In Situ Bioventing Treatment System	V1,130
			IT Corp.	Oxygen Microbubble In Situ Bioremediation	V2,126
			Remediation Technologies, Inc.	Liquid and Solids Biological Treatment	V1,140
		Contaminant Survey systems	Quadrel Srvices, Inc.	Emflux Soil-Gas Survey System	V3,54
		Materials Handling	U.S. EPA	Excavation Techniques and Foam Suppression methods	V1,166
		Physical/ Chemical Thermal Desorption	Biotherm, LCC	Biotherm Process	V1,36
			ELI Eco Logic Inc.	Gas-Phase Chemical Reduction Process	V1,68
			ELI Eco Logic International Inc.	Thermal Desorption Unit	V1,70
			KAI Technologies, Inc./Brown and Root Environmental	Radio Frequency Heating	V1,106
			Maxymillian Technologies, Inc.	Thermal Desorption System	V1,112
			New Jersey Institute of Technology	GHEA Association process	V2,86
			NOVATERRA, Inc.	In-Situ Soil Treatments (Steam/ Air Stripping)	V1,134
			OHM Remediation Services Corp.	X*TRAX™ Thermal Desorption	V1,136
			Recycling Sciences International, Inc.	Desorption and Vapor Extraction System	V1,220
			Smith Environmental Technologies Corp.	Low Temperature Thermal Aeration (LTTA®)	V1,148
			Roy F. Weston, Inc.	Low Temperature Thermal Treatment (LT3®) System	V1,174
		Physical/ Chemical Treatment	Bergmann, A Division of Linatex, Inc.	Soil and Sediment Washing	V1,26
			CF Systems Corp.	Liquified Gas Solvent Extraction (LG-SX) Technology	V1,48
			Electrokinetics, Inc.	Electrokinetic Soil Processing	V1,66
			High Voltage Environmental Applications, Inc.	High Energy Electron Beam Irradiation	V2,54

APPLICABILITY INDEX (continued)

Media	Contaminants	Treatment Type	Technology Vendor	Technology	Volume, Page Number
Sediment (continued)	SVOCs (continued)	Physical/ Chemical Treatment (continued)	High Voltage Environmental Applications, Inc.	High Energy Electron Irradiation	V1,94
			Ionics RCC	B.E.S.T. Solvent Extraction Technology	V1,104
			IT Corp.	Mixed Waste Treatment Process	V2,68
			National Risk Management Research Laboratory	Base-Catalyzed Decomposition Process	V1,116
			National Risk Management Research Laboratory and IT Corp.	Debris Washing System	V1,122
			Terra-Kleen Response Group, Inc.	Solvent Extraction Treatment System	V1,158
			Terra Vac, Inc.	In Situ and Ex Situ Vacuum Extraction	V1,160
			Toronto Harbour Commission	Soil Recycling.	V1,162
		Portable Gas Chromatographs	Bruker Analytical Systems, Inc.	Mobile Environmental Monitor	V3,20
			U.S. EPA	Field Analytical Screening Program - PCB Method	V3,78
		Solidification/ Stabilization	Chemfix Technologies, Inc.	Solidification and Stabilization	V1,50
			Geo-Con, Inc.	In Situ Solidification and Stabilization Process	V1,82
			STC Remediation, A Division of Omega Environmental, Inc.	Organic Stabilization and Chemical Fixation/ Solidification	V1,156
			WASTECH, Inc.	Solidification and Stabilization	V1,172
			Western Product Recovery Group, Inc.	Coordinate, Chemical Bonding, and Adsorption Treatment	V2,114
		Spectrometers	Graseby Ionics, Ltd., and PCP, Inc.	Ion Mobility Spectrometry	V3,36
		Test Kits	Strategic Diagnostic, Inc. Corp.	RaPID Assay®	V3,72
		Thermal Destruction	BWX Technologies, Inc.	Cyclone Furnace	V1,44
			Institute of Gas Technology	Fluidized-Bed/Cyclonic Agglomerating Combustor	V2,60
			Sonotech, Inc.	Frequency-Tunable Pulse Combustion System	V1,154
			Texaco Inc.	Texaco Gasification Process	V1,162
			U. of Dayton Research Institute	Photothermal Detoxification Unit	V2,106
			Vortec Corp.	Vitrification Process	V1,236
	VOCs	Biological Degradation	Bio-Rem, Inc.	Augmented In Situ Subsurface Bioremediation Process	V1,34
			ECOVA Corp.	Bioslurry Reactor	V1,64

APPLICABILITY INDEX (continued)

Media	Contaminants	Treatment Type	Technology Vendor	Technology	Volume, Page Number
Sediment (continued)	VOCs (continued)	Biological Degradation (continued)	Electrokinetics, Inc.	In Situ Bioremediation by Electrokinetic Injection	V2,120
			New York State Dept. Of Environmental Conservation/ENSR Consulting and Larsen Engineers	Ex Situ Biovault	V1,126
			New York State Dept. Of Environmental Conservation/R.E. Wright Environmental, Inc.	In Situ Bioventing Treatment System	V1,130
			IT Corp.	Oxygen Microbubble In Situ Bioremediation	V2,126
			Phytokinetics, Inc.	Phytoremediation Process	V1,210
		Contaminant Survey systems	Quadrel Srvices, Inc.	Emflux Soil-Gas Survey System	V3,54
		Materials Handling	AEA Technology Environment	Soil Separation and Washing Process	V2,16
			U.S. EPA	Excavation Techniques and Foam Suppression methods	V1,166
		Physical/ Chemical Thermal Desorption	Biotherm, LCC	Biotherm Process	V1,36
			KAI Technologies, Inc./Brown and Root Environmental	Radio Frequency Heating	V1,106
			Maxymillian Technologies, Inc.	Thermal Desorption System	V1,112
			New Jersey Institute of Technology	GHEA Association process	V2,86
			NOVATERRA, Inc.	In-Situ Soil Treatments (Steam/ Air Stripping)	V1,134
			Recycling Sciences International, Inc.	Desorption and Vapor Extraction System	V1,220
			Smith Environmental Technologies Corp.	Low Temperature Thermal Aeration (LTTA®)	V1,148
			Roy F. Weston, Inc.	Low Temperature Thermal Treatment (LT3®) System	V1,174
		Physical/ Chemical Treatment	CF Systems Corp.	Liquified Gas Solvent Extraction (LG-SX) Technology	V1,48
			High Voltage Environmental Applications, Inc.	High Energy Electron Irradiation	V1,94
			Institute of Gas Technology	Supercritical Extraction/Liquid Phase Oxidation	V2,62
			Ionics RCC	B.E.S.T. Solvent Extraction Technology	V1,104
			IT Corp.	Batch Steam Distillation and Metal Extraction	V2,64
			IT Corp.	Mixed Waste Treatment Process	V2,68

APPLICABILITY INDEX (continued)

Media	Contaminants	Treatment Type	Technology Vendor	Technology	Volume, Page Number
Sediment (continued)	VOCs (continued)	Physical/ Chemical Treatment (continued)	Terra-Kleen Response Group, Inc.	Solvent Extraction Treatment System	V1,158
			Terra Vac, Inc.	In Situ and Ex Situ Vacuum Extraction	V1,160
		Portable Gas Chromatographs	Bruker Analytical Systems, Inc.	Mobile Environmental Monitor	V3,20
			U.S. EPA	Field Analytical Screening Program - PCB Method	V3,78
		Solidification/ Stabilization	Geo-Con, Inc.	In Situ Solidification and Stabilization Process	V1,82
			WASTECH, Inc.	Solidification and Stabilization	V1,172
			Western Product Recovery Group, Inc.	Coordinate, Chemical Bonding, and Adsorption Treatment	V2,114
		Spectrometers	Graseby Ionics, Ltd., and PCP, Inc.	Ion Mobility Spectrometry	V3,36
		Test Kits	Strategic Diagnostic, Inc. Corp.	RaPID Assay®	V3,72
		Thermal Destruction	Energy and Environmental Research Corp.	Hybrid Fluidized Bed System	V2,40
			Institute of Gas Technology	Fluidized-Bed/Cyclonic Agglomerating Combustor	V2,60
			Sonotech, Inc.	Frequency-Tunable Pulse Combustion System	V1,154
			Texaco Inc.	Texaco Gasification Process	V1,162
			Vortec Corp.	Vitrification Process	V1,236
	Other	Solidification/ Stabilization	STC Remediation, A Division of Omega Environmental, Inc.	Organic Stabilization and Chemical Fixation/ Solidification	V1,156
Sludge	Aromatic VOCs	Biological Degradation	Bio-Rem, Inc.	Augmented In Situ Subsurface Bioremediation Process	V1,34
			Electrokinetics, Inc.	In Situ Bioremediation By Electrokinetic Injection	V2,120
			GRACE Bioremediation Technologies	DARAMEND™ Bioremediation Technology	V1,90
			Institute of Gas Technology	Fluid Extraction - Biological Degradation process	V2,58
			New York State Dept. of Environmental Conservation/ ENSR Consulting and Larsen Engineers	Ex Situ Biovault	V1,126
			New York State Dept. of Environmental Conservation/ R.E. Wright Environmental, Inc.	In Situ Bioventing Treatment System	V1,130

APPLICABILITY INDEX (continued)

Media	Contaminants	Treatment Type	Technology Vendor	Technology	Volume, Page Number
Sludge (continued)	Aromatic VOCs (continued)	Biological Degradation (Continued)	IT Corp.	Oxygen Microbubble In Situ Bioremediation	V2,126
		Materials Handling	United States Environmental Protection Agency	Excavation Techniques and Foam Suppression Methods	V1,166
		Physical/ Chemical Thermal Desorption	Biotherm, LCC	Biotherm Process	V1,36
			Maxymillian Technologies, Inc.	Thermal Desorption System	V1,112
			NOVATERRA, Inc.	In-Situ Soil Treatments (Steam/Air Stripping)	V1,134
			Recycling Sciences International, Inc.	Desorption and Vapor Extraction System	V1,220
			Smith Environmental Technologies Corp.	Low Temperature Thermal Aeration [LTTA®]	V1,148
		Physical/ Chemical Treatment	CF Systems Corp.	Liquified Gas Solvent Extraction [LG-SX] Technology	V1,48
			Electrokinetics, inc.	Electrokinetic Soil Processing	V1,66
			High Voltage Environmental Applications, Inc.	High-Energy Electron Beam Irradiation	V2,54
			High Voltage Environmental Applications, Inc.	High-Energy Electron Irradiation	V1,94
			Institute of Gas Technology	Supercritical Extraction/Liquid Phase Oxidation	V2,62
			Ionics RCC	B.E.S.T. Solvent Extraction Technology	V1,104
			IT Corp.	Mixed Waste Treatment Process	V2,68
			Terra Vac, Inc.	In Situ and Ex Situ Vacuum Extraction	V1,160
		Portable Gas Chromatographs	Bruker Analytical Systems, Inc.	Mobile Environmental Monitor	V3,20
			United States Environmental Protection Agency	Field Analytical Screening Program - PCB Method	V3,78
		Solidification/ Stabilization	Geo-Con, Inc.	In Situ Solidification and Stabilization Process	V1,82
			WASTECH, Inc.	Solidification/ Stabilization	V1,172
			Western Product Recovery Group, Inc.	Coordinate, Chemical Bonding, and Adsorption Treatment	V2,114
		Spectrometers	Graseby Ionics, Ltd., and PCP, Inc.	Ion Mobility Spectrometry	V3,36
		Thermal Destruction	Sonotech, Inc.	Frequency-Tunable Pulse Combustion System	V1,154
			Texaco, Inc.	Texaco Gasification Process	V1,162

APPLICABILITY INDEX (continued)

Media	Contaminants	Treatment Type	Technology Vendor	Technology	Volume, Page Number
Sludge (continued)	Aromatic VOCs (continued)	Thermal Destruction (continued)	U. of Dayton Research Institute	Photothermal Detoxification Unit	V2,106
			Vortec Corp.	Vitrification Process	V1,236
	Cyanide	Biological Degradation	Pintail Systems, Inc.	Spent ore Bioremediation Process	V1,214
	Dioxins	Biological Degradation	Institute of Gas Technology	Fluid Extraction - Biological Degradation Process	V2,58
		Materials Handling	U.S. EPA	Excavation Techniques and Foam Suppression Methods	V1,166
		Physical/ Chemical Thermal Desorption	ELI Eco Logic Inc.	Gas-Phase Chemical Reduction Process	V1,68
			ELI Eco Logic International Inc.	Thermal Desorption unit	V1,70
			Recycling Sciences International, Inc.	Desorption and Vapor Extraction System	V1,220
			Roy F. Weston, Inc.	Low Temperature Thermal Treatment (LT3®) Systems	V1,174
		Physical/ Chemical Treatment	ART International, Inc.	Low-Energy Extraction Process (LEEP)	V2,20
			CF Systems Corp.	Liquified Gas Solvent Extraction [LG-SX] Technology	V1,48
			High Voltage Environmental Applications, Inc.	High-Energy Electron Irradiation	V1,94
			Ionics RCC	B.E.S.T. Solvent Extraction Technology	V1,104
			IT Corp.	Mixed Waste Treatment Process	V2,68
			National Risk Management Research laboratory	Base-Catalyzed Decomposition Process	V1,116
			National Risk Management Research laboratory	Debris Washing System	V1,122
			Terra-Kleen Response Group, Inc.	Solvent Extraction Treatment System	V1,158
			Trinity Environmental Technologies, Inc.	PCB- and Organochlorine-Contaminated Soil Detoxification	V2,104
		Portable Gas Chromatographs	Bruker Analytical Systems, Inc.	Mobile Environmental Monitor	V3,20
		Solidification/ Stabilization	Geosafe Corp.	GeoMelt Vitrification	V1,84
			WASTECH, Inc.	Solidification/ Stabilization	V1,172
		Thermal Destruction	BWX Technologies, Inc.	Cyclone Furnace	V1,44
			Energy and Environmental Research Corp.	Reactor Filter System	V2,42

APPLICABILITY INDEX (continued)

Media	Contaminants	Treatment Type	Technology Vendor	Technology	Volume, Page Number
Sludge (continued)	Dioxins (continued)	Thermal Destruction (continued)	Institute of Gas Technology	Fluidized-Bed/ Cyclonic Agglomerating Combustor	V2,60
			U. of Dayton Research Institute	Photothermal Detoxification unit	V2,106
			Vortec Corp.	Vitrification Process	V1,236
	Explosives	Biological Degradation	J.R. Simplot Co.	The SABRE™ Process	V1,66
		Physical/ Chemical Thermal Desorption	New Jersey Institute of Technology	GHEA Associates Process	V2,86
	Furans	Biological Degradation	Institute of Gas Technology	Fluid Extraction - Biological Degradation Process	V2,58
		Materials Handling	U.S. EPA	Excavation Techniques and Foam Suppression Methods	V1,166
		Physical/ Chemical Thermal Desorption	ELI Eco Logic Inc.	Gas-Phase Chemical Reduction Process	V1,68
			ELI Eco Logic International Inc.	Thermal Desorption Unit	V1,70
			Recycling Sciences International, Inc.	Desorption and Vapor Extraction System	V1,220
			Roy F. Weston, Inc.	Low Temperature Thermal Treatment (LT3®) System	V1,174
		Physical/ Chemical Treatment	ART International, Inc.	Low-Energy Extraction Process (LEEP)	V2,20
			CF Systems Corp.	Liquified Gas Solvent Extraction (LG-SX) Technology	V1,48
			High Voltage Environmental Applications, Inc.	High-Energy Electron Irradiation	V1,94
			Ionics RCC	B.E.S.T. Solvent Extraction Technology	V1,104
			IT Corp.	Mixed Waste Treatment Process	V2,68
			National Risk Management Research Laboratory	Base-Catalyzed Decomposition Process	V1,116
			National Risk Management Research Laboratory	Debris Washing System	V1,122
			Terra-Kleen Response Group, Inc.	Solvent Extraction Treatment Systems	V1,158
			Trinity Environmental Technologies, Inc.	PCB- and Organochlorine-Contaminated Soil Detoxification	V2,104
		Portable Gas Chromatographs	Bruker Analytical Systems, Inc.	Mobile Environmental Monitor	V3,20
		Solidification/ Stabilization	Geosafe Corp.	GeoMelt Vitrification	V1,84
			WASTECH, Inc.	Solidification and Stabilization	V1,172
		Thermal Desorption	BWX Technologies, Inc.	Cyclone Furnace	V1,44

APPLICABILITY INDEX (continued)

Media	Contaminants	Treatment Type	Technology Vendor	Technology	Volume, Page Number
Sludge (continued)	Furans (continued)	Thermal Desorption (continued)	Energy and Environmental Research Corp.	Reactor Filter System	V2,42
			Institute of Gas Technology	Fluidized-Bed/ Cyclonic Agglomerating Combustor	V2,60
			U. of Dayton Research Institute	Photothermal Detoxification unit	V2,106
			Vortec Corp.	Vitrification Process	V1,236
	Halogenated VOCs	Biological Degradation	Bio-Rem, Inc.	Augmented In Situ Subsurface Bioremediation Process	V1,34
			New York State Dept. of Environmental Conservation/ ENSR Consulting and Larsen Engineers	Ex Situ Biovault	V1,126
			New York State Dept. of Environmental Conservation/ R.E. Wright Environmental, Inc.	In Situ Bioventing Treatment System	V1,130
			IT Corp.	Oxygen Microbubble In Situ Bioremediation	V2,126
		Materials Handling	United States Environmental Protection Agency	Excavation Techniques and Foam Suppression Methods	V1,166
		Physical/ Chemical Treatment - Biological Degradation	Lasagna™ Public-Private Partnership	Lasagna™ In Situ Soil Remediation	V1,202
		Physical/ Chemical Thermal Desorption	KAI Technologies, Inc./Brown and Root Environmental	Radio Frequency Heating	V1,106
			New Jersey Institute of Technology	GHEA Associates Process	V2,86
			NOVATERRA, Inc.	In-Situ Soil Treatments (Steam/Air Stripping)	V1,134
			OHM Remediation Services Corp.	X*TRAX™ Thermal Desorption	V1,136
			Recycling Sciences International, Inc.	Desorption and Vapor Extraction System	V1,220
			Roy F. Weston, Inc.	Low Temperature Thermal Treatment (LT3®) System	V1,174
		Physical/ Chemical Treatment	CF Systems Corp.	Liquified Gas Solvent Extraction [LG-SX] Technology	V1,48
			Commodore Environmental Services, Inc.	Solvated Electron Remediation System	V1,56
			Electrokinetics, inc.	Electrokinetic Soil Processing	V1,66

APPLICABILITY INDEX (continued)

Media	Contaminants	Treatment Type	Technology Vendor	Technology	Volume, Page Number
Sludge (continued)	Halogenated VOCs (continued)	Physical/Chemical Treatment (continued)	High Voltage Environmental Applications, Inc.	High-Energy Electron Beam Irradiation	V2,54
			High Voltage Environmental Applications, Inc.	High-Energy Electron Irradiation	V1,94
			Institute of Gas Technology	Supercritical Extraction/Liquid Phase Oxidation	V2,62
			Ionics RCC	B.E.S.T. Solvent Extraction Technology	V1,104
			IT Corp.	Mixed Waste Treatment Process	V2,68
			Terra Vac, Inc.	In Situ and Ex Situ Vacuum Extraction	V1,160
			Trinity Environmental Technologies, Inc.	PCB- and Organochlorine-Contaminated Soil Detoxification	V2,104
		Portable Gas Chromatographs	Bruker Analytical Systems, Inc.	Mobile Environmental Monitor	V3,20
			United States Environmental Protection Agency	Field Analytical Screening Program - PCB Method	V3,78
		Solidification/ Stabilization	Geo-Con, Inc.	In Situ Solidification and Stabilization Process	V1,82
			WASTECH, Inc.	Solidification/ Stabilization	V1,172
		Spectrometers	Graseby Ionics, Ltd., and PCP, Inc.	Ion Mobility Spectrometry	V3,36
		Thermal Destruction	Energy and Environmental Research Corp.	Hybrid Fluidized Bed System	V2,40
			Texaco, Inc.	Texaco Gasification Process	V1,162
			U. of Dayton Research Institute	Photothermal Detoxification Unit	V2,106
			Vortec Corp.	Vitrification Process	V1,236
	Heavy Metals	Field Portable X-ray Fluorescence	HNU Systems, Inc.	HNU Source Excited Fluorescence Analyzer-Portable (SEFA-P) X-ray Fluorescence Analyzer	V3,44
	Heavy Minerals	Materials Handling	Montana College of Mineral Science and Technology	Campbell Centrifugal Jig	V2,84
	Herbicides	Biological Degradation	Electrokinetics, Inc.	In Situ Bioremediation by Electrokinetic Injection	V2,120
			GRACE Bioremediation Technologies	DARAMEND™ Bioremediation Technology	V1,90
			Institute of Gas Technology	Fluid Extraction - Biological Degradation Process	V2,58
			J.R. Simplot Co.	The SABRE™ Process	V1,66

APPLICABILITY INDEX (continued)

Media	Contaminants	Treatment Type	Technology Vendor	Technology	Volume, Page Number
Sludge (continued)	Herbicides (continued)	Materials Handling	U.S. EPA	Excavation Techniques and Foam Suppression methods	V1,166
		Physical Chemical Treatment - Biological Degradation	Lasagna™ Public - Private Partnership	Lasagna™ In Situ Soil Remediation	V1,202
		Physical/ Chemical Thermal Desorption	ELI Eco Logic Inc.	Gas-Phase Chemical Reduction Process	V1,68
			ELI Eco Logic International Inc.	Thermal Desorption Unit	V1,70
			Maxymillian Technologies, Inc.	Thermal Desorption System	V1,112
			OHM Remediation Services Corp.	X*TRAX™ Thermal Desorption	V1,136
			Recycling Sciences International, Inc.	Desorption and Vapor Extraction System	V1,220
			Smith Environmental Technologies Corp.	Low Temperature Thermal Aeration (LTTA3)	V1,148
			Roy F. Weston, Inc.	Low Temperature Thermal Treatment (LT3®)	V1,174
		Physical/ Chemical Treatment	ART International, Inc.	Low-Energy Extraction Process (LEEP)	V2,20
			CF Systems Corp.	Liquified Gas Solvent Extraction (LG-SC) Technology	V1,48
			High Voltage Environmental Applications, Inc.	High-Energy Electron Irradiation	V1,94
			Ionics RCC	B.E.S.T. Solvent Extraction Technology	V1,104
			IT Corp.	Mixed Waste Treatment Process	V2,68
			National Risk Management Research Laboratory	Base-Catalyzed Decomposition Process	V1,116
			National Risk Management Research Laboratory and IT Corp.	Debris Washing System	V1,122
		Portable Gas Chromatographs	Bruker Analytical Systems, Inc.	Mobile Environmental Monitor	V3,20
		Solidification/ Stabilization	Chemfix Technologies, Inc.	Solidification and Stabilization	V1,50
			WASTECH, Inc.	Solidification and Stabilization	V1,172
		Test Kits	Strategic Diagnostic, Inc. Corp.	RaPID Assay®	V3,72
		Thermal Destruction	BWX Technologies, Inc.	Cyclone Furnace	V1,44
			U. of Dayton Research Institute	Photothermal Detoxification Unit	V2,106

APPLICABILITY INDEX (continued)

Media	Contaminants	Treatment Type	Technology Vendor	Technology	Volume, Page Number
Sludge (continued)	Herbicides (continued)	Thermal Destruction (continued)	Vortec Corp.	Vitrification Process	V1,236
	Inorganics	Field Portable X-ray Fluorescence	HNU Systems, Inc.	HNU Source Excited Fluorescence Analyzer-Portable (SEFA-P)	V3,44
	Metals	Biological Degradation	Geo-Microbial Technologies, Inc.	Metals Release & Remove from Waste	V2,124
			Phytotech	Phytoremediation Technology	V1,212
			Pintail Systems, Inc.	Biomineralization of Metals	V2,130
			Pintail Systems, Inc.	Spent Ore Bioremediation Process	V1,214
		Field Portable X-ray Fluorescence	HNU Systems, Inc.	HNU Source Excited Fluorescence Analyzer-Portable (SEFA-P) X-Ray Fluorescence Analyzer	V3,44
			NITON Corp.	XL Spectrum Analyzer	V3,52
			TN Spectrace	9000 X-Ray Fluorescence Analyzer and Lead X-Ray Fluorescence Analyzer	V3,74
		Materials Handling	AEA Technology Envioronment	Soil Separation and Washing Process	V2,16
			Montana College of Mineral Science and Technology	Campbell Centrifugal Jig	V2,84
			United States Environmental Protection Agency	Excavation Techniques and Foam Suppression Methods	V1,166
			U. of South Carolina	In Situ Mitigation of Acid Water	V2,108
		Physical Chemical Treatment - Biological Degradation	Lasagna™ Public-Private Partnership	Lasagna™ In Situ Soil Remediation	V1,202
		Physical/ Chemical Thermal Desorption	New Jersey Institute of Technology	GHEA Associates Process	V2,86
		Physical/ Chemical Treatment	BioGenesis Enterprises, Inc.	BioGenesisSM Soil & Sediment Washing Process	V1,32
			Center for Hazardous Materials Research	Acid Extraction Treatment System	V2,30
			COGNIS, Inc.	TERRAMET Soil Remediation System	V1,52
			Dynaphore, Inc	FORAGER®Sponge	V1,62
			Electrokinetics, Inc.	Electrokinetic Soil Processing	V1,66
			General Atomics, Nuclear Remediation Technologies Division	Acoustic Barrier Particulate Separator	V2,48
		Physical/ Chemical Treatment	IT Corp.	Batch Steam Distillation and Metal Extraction	V2,64
			IT Corp.	Chelation/ Electrodeposition of Toxic Metals from Soils	V2,66
			IT Corp.	Mixed Waste Treatment Process	V2,68

APPLICABILITY INDEX (continued)

Media	Contaminants	Treatment Type	Technology Vendor	Technology	Volume, Page Number
Sludge (continued)	Metals (continued)	Physical/chemical Treatment (continued)	National Risk Management Research Laboratory and IT Corp.	Debris Washing System	V1,122
			Selentec Environmental Technologies, Inc.	Selentec MAG*SEP Technology	V1,226
			Toronto Harbour Commission	Soil Recycling	V1,162
		Solidification / Stabilization	Chemfix Technologies, Inc.	Solidification and Stabilization	V1,50
			Ferro Corp.	Waste Vitrification Through Electric Melting	V2,46
			Funderburk & Associates	Dechlorination and Immobilization	V1,78
			Geo-Con, Inc.	In Situ Solidification and Stabilization Process	V1,82
			Geosafe Corp.	GeoMelt Vitrification	V1,84
			Rocky Mountain Remediation Services, L.L.C.	Envirobond Solution	V1,222
			Sevenson Environmental Services, Inc.	MAECTITE® Chemical Treatment Process	V1,228
			Soliditech, Inc.	Solidification and Stabilization	V1,152
			Star Organics, L.L.C.	Soil Rescue Remediation Fluid	V1,232
			STC Remediation, A Division of Omega Environmental, Inc.	Organic Stabilization and Chemical Fixation/Solidification	V1,156
			WASTECH, Inc.	Solidification and Stabilization	V1,172
			Western Product Recovery Group, Inc.	Coordinate, Chemical Bonding, and Adsorption Treatment	V2,114
		Thermal Destruction	BWX Technologies, Inc.	Cyclone Furnace	V1,44
			Energy and Environmental Research Corp.	Hybrid Fluidized Bed System	V2,40
			Energy and Environmental Research Corp.	Reactor Filter System	V2,42
			Horsehead Resource Development Co., Inc.	Flame Reactor	V1,96
			Institute of Gas Technology	Fluidized-Bed/ Cyclonic Agglomerating Combustor	V2,60
			PSI Technologies, A Division of Physical Sciences Inc.	Metals Immobilization and Decontamination of Aggregate Solids	V2,88
			Vortec Corp.	Vitrification Process	V1,236
	PAHs	Biological Degradation	ECOVA Corp.	Bioslurry Reactor	V1,64
			Institute of Gas Technology	Fluid Extraction - Biological Degradation Process	V2,58
			Remediation Technologies, Inc.	Liquid and Solids Biological Treatment	V1,140

APPLICABILITY INDEX (continued)

Media	Contaminants	Treatment Type	Technology Vendor	Technology	Volume, Page Number
Sludge (continued)	PAHs (continued)	Physical/ Chemical Thermal Desorption	Maxymillian Technologies, Inc.	Thermal Desorption System	V1,112
			Recycling Sciences International, Inc.	Desorption and Vapor Extraction System	V1,220
		Physical/ Chemical Treatment	BioGenesis Enterprises, Inc.	BioGenesisSM Soil & Sediment Washing Process	V1,32
		Portable Gas Chromatographs	Bruker Analytical Systems, Inc.	Mobile Environmental Monitor	V3,20
	PCBs	Biological Degradation	Institute of Gas Technology	Chemical and Biological Treatment	V2,56
			Institute of Gas Technology	Fluid Extraction - Biological Degradation Process	V2,58
		Materials Handling	United States Environmental Protection Agency	Excavation Techniques and Foam Suppression Methods	V1,166
		Physical/ Chemical Thermal Desorption	Biotherm, LCC	Biotherm Process	V1,36
			ELI Eco Logic Inc.	Gas-Phase Chemical Reduction Process	V1,68
			ELI Eco Logic International Inc	Thermal Desorption Unit	V1,70
			KAI Technologies, Inc./ Brown and Root Environmental	Radio Frequency Heating	V1,106
			New Jersey Institute of Technology	GHEA Associates Process	V2,86
			OHM Remediation Services Corp.	X*TRAX™ Thermal Desorption	V1,136
			Recycling Sciences International, Inc.	Desorption and Vapor Extraction System	V1,220
			Roy F. Weston, Inc.	Low Temperature Thermal Treatment [LT3®] System	V1,174
		Physical/ Chemical Treatment	ART International, Inc.	Low-Energy Extraction Process [LEEP]	V2,20
			BioGenesis Enterprises, Inc.	BioGenesisSM Soil & Sediment Washing Process	V1,32
			CF Systems Corp.	Liquified Gas Solvent Extraction [LG-SX] Technology	V1,48
			Commodore Environmental Services, Inc.	Solvated Electron Remediation System	V1,56
			General Atomics	Circulating Bed Combustor	V1,80
			High Voltage Environmental Applications, Inc.	High Energy Electron Beam Irradiation	V2,54
			High Voltage Environmental Applications, Inc.	High-Energy Electron Irradiation	V1,94
			Ionics RCC	B.E.S.T. Solvent Extraction Technology	V1,104

APPLICABILITY INDEX (continued)

Media	Contaminants	Treatment Type	Technology Vendor	Technology	Volume, Page Number
Sludge (continued)	PCBs (continued)	Physical/Chemical Treatment (continued)	IT Corp.	Mixed Waste Treatment Process	V2,68
			National Risk Management Research Laboratory	Base-Catalyzed Decomposition Process	V1,116
			National Risk Management Research Laboratory and IT Corp.	Debris Washing System	V1,122
			State U. of New York at Oswego, Environmental Research Center	Electrochemical Peroxidation of PCB-Contaminated Sediments and Waters	V2,98
			Terra-Kleen Response Group, Inc.	Solvent Extraction Treatment System	V1,158
			Trinity Environmental Technologies, Inc.	PCB- and Organochlorine-Contaminated Soil Detoxification	V2,104
		Portable Gas Chromatographs	Bruker Analytical Systems, Inc.	Mobile Environmental Monitor	V3,20
			United States Environmental Protection Agency	Field Analytical Screening Program - PCB Method	V3,78
		Solidification/ Stabilization	Chemfix Technologies, Inc.	Solidification and Stabilization	V1,50
			Funderburk & Associates	Dechlorination and Immobilization	V1,78
			Geo-Con, Inc.	In Situ Solidification and Stabilization Process	V1,82
			Geosafe Corp.	GeoMelt Vitrification	V1,84
			Soliditech, Inc.	Solidification and Stabilization	V1,152
			WASTECH, Inc.	Solidification and Stabilization	V1,172
		Spectrometers	Graseby Ionics, Ltd., and PCP, Inc.	Ion Mobility Spectrometry	V3,36
		Test Kits	Strategic Diagnostic, Inc.	Ensys Penta Test System	V3,68
		Thermal Destruction	BWX Technologies, Inc.	Cyclone Furnace	V1,44
			Energy and Environmental Research Corp.	Hybrid Fluidized Bed System	V2,40
			Institute of Gas Technology	Fluidized-Bed/ Cyclonic Agglomerating Combustor	V2,60
			U. of Dayton Research Institute	Photothermal Detoxification Unit	V2,106
			Vortec Corp.	Vitrification Process	V1,236
	PCP	Biological Degradation	Remediation Technologies, Inc.	Liquid and Solids Biological Treatment	V1,140
		Physical/ Chemical Thermal Desorption	Recycling Sciences International Inc.	Desorption and Vapor Extraction System	V1,220
		Physical/ Chemical Treatment	Trinity Environmental Technologies, Inc.	PCB- and Organochlorine-Contaminated Soil Detoxification	V2,104
		Test Kits	Strategic Diagnostic, Inc.	Ensys Penta Test System	V3,68

APPLICABILITY INDEX (continued)

Media	Contaminants	Treatment Type	Technology Vendor	Technology	Volume, Page Number
Sludge (continued)	PCP (continued)	Test Kits (continued)	Strategic Diagnostic, Inc. Corp.	RaPID Assay®	V3,72
	Pesticides	Biological Degradation	Electrokinetics, Inc.	In Situ Bioremediation By Electrokinetic Injection	V2,120
			GRACE Bioremediation Technologies.	DARAMEND™ Bioremediation Technology	V1,90
			Institute of Gas Technology	Chemical and Biological Treatment	V2,56
			Institute of Gas Technology	Fluid Extraction - Biological Degradation Process	V2,58
		Materials Handling	United States Environmental Protection Agency	Excavation Techniques and Foam Suppression Methods	V1,166
		Physical/ Chemical Thermal Desorption	Biotherm, LCC	Biotherm Process	V1,36
			ELI Eco Logic Inc.	Gas-Phase Chemical Reduction Process	V1,68
			ELI Eco Logic International Inc	Thermal Desorption Unit	V1,70
			KAI Technologies, Inc./Brown and Root Environmental	Radio Frequency Heating	V1,106
			OHM Remediation Services Corp.	X*TRAX™ Thermal Desorption	V1,136
			Recycling Sciences International, Inc.	Desorption and Vapor Extraction System	V1,220
			Smith Environmental Technologies Corp.	Low Temperature Thermal Aeration [LTTA®]	V1,148
			Roy F. Weston, Inc.	Low Temperature Thermal Treatment [LT3®] System	V1,174
		Physical/ Chemical Treatment	ART International, Inc.	Low-Energy Extraction Process [LEEP]	V2,20
			CF Systems Corp.	Liquified Gas Solvent Extraction [LG-SX] Technology	V1,48
			Commodore Environmental Services, Inc.	Solvated Electron Remediation System	V1,56
			Electrokinetics, Inc.	Electrokinetic Soil Processing	V1,66
			General Atomics	Circulating Bed Combustor	V1,80
			High Voltage Environmental Applications, Inc.	High Energy Electron Beam Irradiation	V2,54
			High Voltage Environmental Applications, Inc.	High Energy Electron Irradiation	V1,94
			Ionics RCC	B.E.S.T. Solvent Extraction Technology	V1,104
			IT Corp.	Mixed Waste Treatment Process	V2,68

Media	Contaminants	Treatment Type	Technology Vendor	Technology	Volume, Page Number
Sludge (continued)	Pesticides (continued)	Physical/ Chemical Treatment (continued)	National Risk Management Research Laboratory	Base-Catalyzed Decomposition Process	V1,116
			National Risk Management Research Laboratory and IT Corp.	Debris Washing System	V1,122
			State U. of New York at Oswego, Environmental Research Center	Electrochemical Peroxidation of PCB-Contaminated Sediments and Waters	V2,98
			Terra-Kleen Response Group, Inc.	Solvent Extraction Treatment System	V1,158
			Trinity Environmental Technologies, Inc.	PCB- and Organochlorine-Contaminated Soil Detoxification	V2,104
		Portable Gas Chromatographs	Bruker Analytical Systems, Inc.	Mobile Environmental Monitor	V3,20
			United States Environmental Protection Agency	Field Analytical Screening Program - PCB Method	V3,78
		Solidification/ Stabilization	Chemfix Technologies, Inc.	Solidification & Stabilization	V1,50
			Funderburk & Associates	Dechlorination and Immobilization	V1,78
			Geo-Con, Inc.	In Situ Solidification and Stabilization Process	V1,82
			Geosafe Corp.	GeoMelt Vitrification	V1,84
			Soliditech, Inc.	Solidification & Stabilization	V1,152
			WASTECH, Inc.	Solidification & Stabilization	V1,172
		Spectrometers	Graseby Ionics, Ltd. and PCP, Inc.	Ion Mobility Spectrometry	V3,36
		Test Kits	Strategic Diagnostic, Inc.	Ensys Penta Test System	V3,68
		Thermal Destruction	BWX Technologies, Inc.	Cyclone Furnace	V1,44
			Energy and Environmental Research Corp.	Hybrid Fluidized Bed System	V2,40
			Institute of Gas Technology	Fluidized-Bed/ Cyclonic Agglomerating Combustor	V2,60
			U. of Dayton Research Institute	Photothermal Detoxification Unit	V2,106
			Vortec Corp.	Vitrification Process	V1,236
	PCP	Biological Degradation	Remediation Technologies, Inc.	Liquid and Solids Biological Treatment	V1,140
		Physical/ Chemical Thermal Desorption	Recycling Sciences International Inc	Desorption and Vapor Extraction System	V1,220
		Physical/ Chemical Treatment	Trinity Environmental Technologies, Inc.	PCB- and Organochlorine-Contaminated Soil Detoxification	V2,104
		Test Kits	Strategic Diagnostic, Inc.	Ensys Penta Test System	V3,68

APPLICABILITY INDEX (continued)

Media	Contaminants	Treatment Type	Technology Vendor	Technology	Volume, Page Number
Sludge (continued)	PCP (continued)	Test Kits (continued)	Strategic Diagnostic, Inc. Corp.	RaPID Assay®	V3,72
	Pesticides	Biological Degradation	Electrokinetics, Inc.	In Situ Bioremediation By Electrokinetic Injection	V2,120
			GRACE Bioremediation Technologies	DARAMEND™ Bioremediation Technology	V1,90
			Institute of Gas Technology	Chemical and Biological Treatment	V2,56
			Institute of Gas Technology	Fluid Extraction - Biological Degradation Process	V2,58
		Materials Handling	United States Environmental Protection Agency	Excavation Techniques and Foam Suppression Methods	V1,166
		Physical/ Chemical Thermal Desorption	Biotherm, LCC	Biotherm Process	V1,36
			ELI Eco Logic Inc.	Gas-Phase Chemical Reduction Process	V1,68
			ELI Eco Logic International Inc.	Thermal Desorption Unit	V1,70
			KAI Technologies, Inc./Brown and Root Environmental	Radio Frequency Heating	V1,106
			OHM Remediation Services Corp.	X*TRAX™ Thermal Desorption	V1,136
			Recycling Sciences International, Inc.	Desorption and Vapor Extraction System	V1,220
			Smith Environmental Technologies Corp.	Low Temperature Thermal Aeration [LTTA®]	V1,148
			Roy F. Weston, Inc.	Low Temperature Thermal Treatment [LT3®] System	V1,174
		Physical/ Chemical Treatment	ART International, Inc.	Low-Energy Extraction Process [LEEP]	V2,20
			CF Systems Corp.	Liquified Gas Solvent Extraction [LG-SX] Technology	V1,48
			Commodore Environmental Services, Inc.	Solvated Electron Remediation System	V1,56
			Electrokinetics, Inc.	Electrokinetic Soil Processing	V1,66
			General Atomics	Circulating Bed Combustor	V1,80
			High Voltage Environmental Applications, Inc.	High Energy Electron Beam Irradiation	V2,54
			High Voltage Environmental Applications, Inc.	High Energy Electron Irradiation	V1,94
			Ionics RCC	B.E.S.T. Solvent Extraction Technology	V1,104
			IT Corp.	Mixed Waste Treatment Process	V2,68

APPLICABILITY INDEX (continued)

Media	Contaminants	Treatment Type	Technology Vendor	Technology	Volume, Page Number
Sludge (continued)	Pesticides (continued)	Physical/ Chemical Treatment (continued)	National Risk Management Research Laboratory	Base-Catalyzed Decomposition Process	V1,116
			National Risk Management Research Laboratory and IT Corp.	Debris Washing System	V1,122
			State U. of New York at Oswego, Environmental Research Center	Electrochemical Peroxidation of PCB-Contaminated Sediments and Waters	V2,98
			Terra-Kleen Response Group, Inc.	Solvent Extraction Treatment System	V1,158
			Trinity Environmental Technologies, Inc.	PCB- and Organochlorine-Contaminated Soil Detoxification	V2,104
		Portable Gas Chromatographs	Bruker Analytical Systems, Inc.	Mobile Environmental Monitor	V3,20
			United States Environmental Protection Agency	Field Analytical Screening Program - PCB Method	V3,78
		Solidification/ Stabilization	Chemfix Technologies, Inc.	Solidification/ Stabilization	V1,50
			Funderburk & Associates	Dechlorination and Immobilization	V1,78
			Geo-Con, Inc.	In Situ Solidification and Stabilization Process	V1,82
			Geosafe Corp.	GeoMelt Vitrification	V1,84
			Soliditech, Inc.	Solidification/ Stabilization	V1,152
			WASTECH, Inc.	Solidification/ Stabilization	V1,172
		Spectrometers	Graseby Ionics, Ltd., and PCP, Inc.	Ion Mobility Spectrometry	V3,36
		Test Kits	Strategic Diagnostic, Inc.	Ensys Penta Test System	V3,68
			Strategic Diagnostic, Inc. Corp.	RaPID Assay®	V3,72
		Thermal Destruction	BWX Technologies, Inc.	Cyclone Furnace	V1,44
			Energy & Environmental Research Corp.	Hybrid Fluidized Bed System	V2,42
			Institute of Gas Technology	Fluidized-Bed/ Cyclonic Agglomerating Combustor	V2,60
			U. of Dayton Research Institute	Photothermal Detoxification Unit	V2,106
			Vortec Corp.	Vitrification Process	V1,236
	Petroleum Hydrocarbons	Biological Degradation	ECOVA Corp.	Bioslurry Reactor	V1,64
			Remediation Technologies, Inc.	Liquid and Solids Biological Treatment	V1,140
		Physical/ Chemical Thermal Desorption	New Jersey Institute of Technology	GHEA Associates Process	V2,86
			Smith Environmental Technologies Corp.	Low Temperature Thermal Aeration [LTTA®]	V1,148

APPLICABILITY INDEX (continued)

Media	Contaminants	Treatment Type	Technology Vendor	Technology	Volume, Page Number
Sludge (continued)	Petroleum Hydrocarbons (continued)	Solidification/ Stabilization	Soliditech, Inc.	Solidification/ Stabilization	V1,152
	Radio nuclides	Materials Handling	Thermo Nutech, Inc.	Segmented Gate System	V2,134
		Physical/ Chemical Treatment	IT Corp.	Mixed Waste Treatment Process	V2,68
			Selentec Environmental Technologies, Inc.	Selentec MAG*SEP Technology	V1,226
		Solidification/ Stabilization	Sevenson Environmental Services, Inc.	MAECTITE® Chemical Treatment Process	V1,228
			WASTECH, Inc.	Solidification/ Stabilization	V1,172
		Thermal Destruction	BWX Technologies, Inc.	Cyclone Furnace	V1,44
	SVOCs	Biological Degradation	ECOVA Corp.	Bioslurry Reactor	V1,64
			GRACE Bioremediation Technologies.	DARAMEND™ Bioremediation Technology	V1,90
			Institute of Gas Technology	Chemical and Biological Treatment	V2,56
			Institute of Gas Technology	Fluid Extraction - Biological Degradation Process	V2,58
			IT Corp.	Tekno Associates Bioslurry Reactor	V2,72
			New York State Dept. of Environmental Conservation/ ENSR Consulting and Larsen Engineers	EX Situ Biovault	V1,126
			New York State Dept. of Environmental Conservation/ R.E. Wright Environmental, Inc.	In Situ Bioventing Treatment System	V1,130
			IT Corp.	Oxygen Microbubble In Situ Bioremediation	V2,126
			Remediation Technologies, Inc.	Liquid and Solids Biological Treatment	V1,140
		Materials Handling	United States Environmental Protection Agency	Excavation Techniques and Foam Suppression Methods	V1,166
		Physical/ Chemical Thermal Desorption	Biotherm, LCC	Biotherm Process	V1,36
			ELI Eco Logic Inc.	Gas-Phase Chemical Reduction Process	V1,68
			ELI Eco Logic International Inc.	Thermal Desorption Unit	V1,70
			KAI Technologies, Inc./Brown and Root Environmental	Radio Frequency Heating	V1,106
			Maxymillian Technologies, Inc.	Thermal Desorption System	V1,112
			New Jersey Institute of Technology	GHEA Associates Process	V2,86

APPLICABILITY INDEX (continued)

Media	Contaminants	Treatment Type	Technology Vendor	Technology	Volume, Page Number
Sludge (continued)	SVOCs (continued)	Physical/ Chemical Thermal Desorption (continued)	NOVATERRA, Inc.	In-Situ Soil Treatments [Steam/Air Stripping]	V1,134
			OHM Remediation Services Corp.	X*TRAX™ Thermal Desorption	V1,136
			Recycling Sciences International, Inc.	Desorption and Vapor Extraction System	V1,220
			Smith Environmental Technologies Corp.	Low Temperature Thermal Aeration [LTTA®]	V1,148
			Roy F. Weston, Inc.	Low Temperature Thermal Treatment [LT3®] System	V1,174
		Physical/ Chemical Treatment	CF Systems Corp.	Liquified Gas Solvent Extraction [LG-SX] Technology	V1,48
			Electrokinetics, Inc.	Electrokinetic Soil Processing	V1,66
			High Voltage Environmental Applications, Inc.	High Energy Electron Beam Irradiation	V2,54
			High Voltage Environmental Applications, Inc.	High-Energy Electron Irradiation	V1,94
			Ionics RCC	B.E.S.T. Solvent Extraction Technology	V1,104
			IT Corp.	Mixed Waste Treatment Process	V2,68
			National Risk Management Research Laboratory	Base-Catalyzed Decomposition Process	V1,116
			National Risk Management Research Laboratory and IT Corp.	Debris Washing System	V1,122
			Terra-Kleen Response Group, Inc.	Solvent Extraction Treatment System	V1,158
			Terra Vac, Inc.	In Situ and Ex Situ Vacuum Extraction	V1,160
			Toronto Harbour Commission	Soil Recycling	V1,162
		Portable Gas Chromatographs	Bruker Analytical Systems, Inc.	Mobile Environmental Monitor	V3,20
			United States Environmental Protection Agency	Field Analytical Screening Program - PCB Method	V3,78
		Solidification/ Stabilization	Chemfix Technologies, Inc.	Solidification/ Stabilization	V1,50
			Geo-Con, Inc.	In Situ Solidification and Stabilization Process	V1,82
			STC Remediation, A Division of Omega Environmental, Inc.	Organic Stabilization and Chemical Fixation/Solidification	V1,156
			WASTECH, Inc.	Solidification/ Stabilization	V1,172
			Western Product Recovery Group, Inc.	Coordinate, Chemical Bonding, and Adsorption Treatment	V2,114

APPLICABILITY INDEX (continued)

Media	Contaminants	Treatment Type	Technology Vendor	Technology	Volume, Page Number
Sludge (continued)	SVOCs (continued)	Spectrometers	Graseby Ionics, Ltd., and PCP, Inc.	Ion Mobility Spectrometry	V3,36
		Test Kits	Strategic Diagnostic, Inc. Corp.	RaPID Assay®	V3,72
		Thermal Desorption	BWX Technologies, Inc.	Cyclone Furnace	V1,44
			Institute of Gas Technology	Fluidized-Bed/ Cyclonic Agglomerating Combustor	V2,60
			Sonotech, Inc.	Frequency-Tunable Pulse Combustion System	V1,154
			Texaco, Inc.	Texaco Gasification Process	V1,162
			U. of Dayton Research Institute	Photothermal Detoxification Unit	V2,106
			Vortec Corp.	Vitrification Process	V1,236
	VOCs	Biological Degradation	Bio-Rem, Inc.	Augmented In Situ Subsurface Bioremediation Process	V1,34
			ECOVA Corp.	Bioslurry Reactor	V1,64
			Electrokinetics, Inc.	In Situ Bioremediation By Electrokinetic Injection	V2,120
			New York State Dept. of Environmental Conservation/ ENSR Consulting and Larsen Engineers	Ex Situ Biovault	V1,126
			New York State Dept. of Environmental Conservation/ R.E. Wright Environmental, Inc.	In Situ Bioventing Treatment System	V1,130
			IT Corp.	Oxygen Microbubble In Situ Bioremediation	V2,126
		Materials Handling	AEA Technology Environment	Soil Separation and Washing Process	V2,16
			United States Environmental Protection Agency	Excavation Techniques and Foam Suppression Methods	V1,166
		Physical/ Chemical Thermal Desorption	Biotherm, LCC	Biotherm Process	V1,36
			KAI Technologies, Inc./Brown and Root Environmental	Radio Frequency Heating	V1,106
			Maxymillian Technologies, Inc.	Thermal Desorption System	V1,112
			New Jersey Institute of Technology	GHEA Associates Process	V2,86
			NOVATERRA, Inc.	In-Situ Soil Treatments (Steam/Air Stripping)	V1,134
			Recycling Sciences International, Inc.	Desorption and Vapor Extraction System	V1,220
			Smith Environmental Technologies Corp.	Low Temperature Thermal Aeration [LTTA®]	V1,148

APPLICABILITY INDEX (continued)

Media	Contaminants	Treatment Type	Technology Vendor	Technology	Volume, Page Number
Sludge (continued)	VOCs (continued)	Physical/ Chemical Thermal Desorption (continued)	Roy F. Weston, Inc.	Low Temperature Thermal Treatment [LT3®] System	V1,174
		Physical/ Chemical Treatment	CF Systems Corp.	Liquified Gas Solvent Extraction [LG-SX] Technology	V1,48
			High Voltage Environmental Applications, Inc.	High-Energy Electron Irradiation	V1,94
			Institute of Gas Technology	Supercritical Extraction/Liquid Phase Oxidation	V2,62
			Ionics RCC	B.E.S.T. Solvent Extraction Technology	V1,104
			IT Corp.	Batch Steam Distillation and Metal Extraction	V2,64
			IT Corp.	Mixed Waste Treatment Process	V2,68
			Terra-Kleen Response Group, Inc.	Solvent Extraction Treatment System	V1,158
			Terra Vac, Inc.	In Situ and Ex Situ Vacuum Extraction	V1,160
		Portable Gas Chromatographs	Bruker Analytical Systems, Inc.	Mobile Environmental Monitor	V3,20
			United States Environmental Protection Agency	Field Analytical Screening Program - PCB Method	V3,78
		Solidification/ Stabilization	Geo-Con, Inc.	In Situ Solidification and Stabilization Process	V1,82
			WASTECH, Inc.	Solidification/ Stabilization	V1,172
			Western Product Recovery Group, Inc.	Coordinate, Chemical Bonding, and Adsorption Treatment	V2,114
		Spectrometers	Graseby Ionics, Ltd., and PCP, Inc.	Ion Mobility Spectrometry	V3,36
		Test Kits	Strategic Diagnostic, Inc. Corp.	RaPID Assay®	V3,72
		Thermal Destruction	Energy and Environmental Research Corp.	Hybrid Fluidized Bed System	V2,40
			Institute of Gas Technology	Fluidized-Bed/ Cyclonic Agglomerating Combustor	V2,60
			Sonotech, Inc.	Frequency-Tunable Pulse Combustion System	V1,154
			Texaco, Inc.	Texaco Gasification Process	V1,162
			Vortec Corp.	Vitrification Process	V1,236
	Other	Solidification/ Stabilization	STC Remediation, A Division of Omega Environmental, Inc.	Organic Stabilization and Chemical Fixation/Solidification	V1,156
Soil	Aromatic VOCs	Biological Degradation	Billings and Associates, Inc.	Subsurface Volatilization and Ventilation System (SVVS)	V1,30

APPLICABILITY INDEX (continued)

Media	Contaminants	Treatment Type	Technology Vendor	Technology	Volume, Page Number
Soil (continued)	Aromatic VOCs (continued)	Biological Degradation (continued)	Bio-Rem, Inc.	Augmented In Situ Subsurface Bioremediation Process	V1,34
			Electrokinetics, Inc.	In Situ Bioremediation by Electrokinetic Injection	V2,120
			GRACE Bioremediation Technologies	DARAMEND™ Bioremediation Technology	V1,90
			Harding Lawson Associates	Two Zone, Plume Interception. In Situ Treatment Technology	V2,48
			Hazardous Substance Management Research Center at New Jersey Institute of Technology, and Rutgers, the State U. of New Jersey	Pneumatic Fracturing and Bioremediation Process	V2,52
			Institute of Gas Technology	Fluid Extraction - Biological Degradation Process	V2,58
			National Risk Management Research Laboratory	Bioventing	V1,208
			New York State Dept. of Environment Conservation/ENSR Consulting and Larson Engineers	Ex Situ Biovault	V1,126
			New York State Dept. of Environmental Conservation/R.E. Wright Environmental, Inc.	In Situ Bioventing Treatment System	V1,130
			IT Corp.	Oxygen Microbubble In Situ Bioremediation	V2,126
		Contaminant Survey Systems	W.L. Gore and Associates, Inc.	GORE-SORBER Screening Survey	V3,82
		Materials Handling	National Risk Management Research Laboratory. The U. of Cincinnati and FRX, Inc.	Hydraulic Fracturing	V1,124
			U.S. EPA	Excavation Techniques and Foam Suppression Methods	V1,166
		Physical/ Chemical Thermal Desorption	Biotherm, LCC	Biotherm Process	V1,36
			Hughes Environmental Systems, Inc.	Steam Enhanced Recovery Process	V1,100
			Maxymillian Technologies, Inc.	Thermal Desorption System	V1,112
			NOVATERRA, Inc.	In-Situ Soil Treatments, (Steam/Air Stripping)	V1,134
			Recycling Sciences International, Inc.	Desorption and Vapor Extraction System	V1,220
			SoilTech ATP Systems, Inc.	Anaerobic Thermal Processor	V1,150

APPLICABILITY INDEX (continued)

Media	Contaminants	Treatment Type	Technology Vendor	Technology	Volume, Page Number
Soil (continued)	Aromatic VOCs (continued)	Physical/ Chemical Thermal Desorption (continued)	Roy F. Weston, Inc.	Low Temperature Thermal Treatment (LT3™) System	V1,174
		Physical/ Chemical Treatment	Arctic Foundations, Inc.	Cryogenic Barrier	V1,190
			ARS Technologies, Inc.	Pneumatic Fracturing Extraction™ and Catalytic Oxidation	V1,24
			Bergmann, A Division of Linatex, Inc.	Soil and Sediment Washing	V1,26
			CF Systems Corp.	Liquified Gas Solvent Extraction (LG-SX) Technology	V1,48
			Electrokinetics, Inc.	Electrokinetic Soil Processing	V1,66
			Energia, Inc.	Reductive Thermal and Photo-Thermal Oxidation for Enhanced Conversion of Chlorocarbons	V2,122
			High Voltage Environmental Applications, Inc.	High-Energy Electron Irradiation	V1,94
			Institute of Gas Technology	Supercritical Extraction/Liquid Phase Oxidation	V2,62
			Ionics RCC	B.E.S.T. Solvent Extraction Technology	V1,104
			IT Corp.	Mixed Waste Treatment Process	V2,68
			KSE, Inc.	Adsorption-Integrated-Reaction Process	V1,200/ V2,24
			Pulse Sciences, Inc.	X-Ray Treatment of Organically Contaminated Soils	V2,132
			Terra Vac, Inc.	In Situ and Ex Situ Vacuum Extraction	V1,160
			Roy F. Weston, Inc./IEG Technologies	UVB - Vacuum Vaporizing Well	V1,176
			Xerox Corp.	2-PHASE™ EXTRACTION Process	V1,180
		Portable Gas Chromatographs	Bruker Analytical Systems, Inc.	Mobile Environmental Monitor	V3,20
			HNU Systems, Inc.	HNU GC 311D Portable Gas Chromatograph	V3,42
			Photovac Monitoring Instruments	PE Photovac Voyager Portable Gas Chromatograph	V3,56
			SRI Instruments	Compact Gas Chromatograph	V3,66
			U.S. EPA	Field Analytical Screening Program - PCB Method	V3,78
		Samplers	Geoprobe Systems	Large Bore Soil Sampler	V3,34
		Sensors	Fugro Geosciences, Inc.	Rapid Optical Screening Tool	V3,30
		Solidification/ Stabilization	Geo Con. Inc.	In Situ Solidification and Stabilization Process	V1,82
			WASTECH, Inc.	Solidification and Stabilization	V1,172
			Western Product Recovery Group, Inc.	Coordinate, Chemical Bonding, and Adsorption Treatment	V2,114

APPLICABILITY INDEX (continued)

Media	Contaminants	Treatment Type	Technology Vendor	Technology	Volume, Page Number
Soil (continued)	Aromatic VOCs (continued)	Spectrometers	Graseby Ionics, Ltd., and PCP, Inc.	Ion Mobility Spectrometry	V3,36
		Test Kits	Hanby Environmental Laboratory Procedures, Inc.	Test Kits for Organic Contaminants in Soil and Water	V3,38
		Thermal Destruction	Sonotech, Inc.	Frequency Tunable Pulse Combustion System	V1,154
			Texaco, Inc.	Texaco Gasification Process	V1,162
			U. of Dayton Research Institute	Photothermal Detoxification Unit	V2,106
			Vortec Corp.	Vitrification Process	V1,236
	Cyanide	Biological Degradation	Pintail Systems, Inc.	Spent Ore Bioremediation Process	V1,214
		Physical/ Chemical Treatment	Arctic Foundations, Inc.	Cryogenic Barrier	V1,190
	Diesel	Materials Handling	National Risk Management Research Laboratory, The U. of Cincinnati, and FRX, Inc.	Hydraulic Fracturing	V1,124
		Physical/ Chemical Treatment	Arctic Foundations, Inc.	Cryogenic Barrier	V1,190
			Geokinetics International, Inc.	Electroheat-Enhanced Nonaqueous-Phase Liquids Removal	V1,196
			SIVE Services	Steam Injection and Vacuum Extraction	V1,230
	Dioxins	Biological Degradation	Biotrol®	Soil Washing System	V1,40
			Institute of Gas Technology	Fluid Extraction - Biological Degradation Process	V2,58
		Materials Handling	U.S. EPA	Excavation Techniques and Foam Suppression Methods	V1,166
		Physical/ Chemical Thermal Desorption	ELI Eco Logic Inc.	Gas-Phase Chemical Reduction Process	V1,68
			ELI Eco Logic International Inc.	Thermal Desorption Unit	V1,70
			Recycling Sciences International, Inc.	Desorption and Vapor Extraction System	V1,220
			SoilTech ATP Systems, Inc.	Anaerobic Thermal Processor	V1,150
			Roy F. Weston, Inc.	Low Temperature Thermal Treatment (LT3™) System	V1,174
		Physical/ Chemical Treatment	Arctic Foundations, Inc.	Cryogenic Barrier	V1,190
			ART International, Inc.	Low-Energy Extraction Process (LEEP)	V2,20
			CF Systems Corp.	Liquified Gas Solvent Extraction (LG SX) Technology	V1,48
			High Voltage Environmental Applications, Inc.	High-Energy Electron Irradiation	V1,94

APPLICABILITY INDEX (continued)

Media	Contaminants	Treatment Type	Technology Vendor	Technology	Volume, Page Number
Soil (continued)	Dioxins (continued)	Physical/ Chemical Treatment (continued)	Ionics RCC	B.E.S.T. Solvent Extraction Technology	V1,104
			IT Corp.	Mixed Waste Treatment Process	V2,68
			National Risk Management Research Laboratory	Base-Catalyzed Decomposition Process	V1,116
			Terra-Kleen Response Group, Inc.	Solvent Extraction Treatment System	V1,158
			Trinity Environmental Technologies, Inc.	PCB- and Organochlorine-Contaminated Soil Detoxification	V2,104
		Portable Gas Chromatographs	Bruker Analytical Systems, Inc.	Mobile Environmental Monitor	V3,20
		Samplers	Geoprobe Systems	Large Bore Soil Sampler	V3,34
		Solidification/ Stabilization	Geosafe Corp.	GeoMelt Vitrification	V1,84
			WASTECH, Inc.	Solidification and Stabilization	V1,172
		Spectrometers	Graseby Ionics, Ltd., and PCP, Inc.	Ion Mobility Spectrometry	V3,36
		Thermal Destruction	BWX Technologies, Inc.	Cyclone Furnace	V1,44
			Energy and Environmental Research Corp.	Reactor Filter System	V2,42
			Institute of Gag Technology	Fluidized-Bed/Cyclonic Agglomerating Combustor	V2,60
			U. of Dayton Research Institute	Photothermal Detoxification Unit	V2,106
			Vortec Corp.	Oxidation and Verification Process	V1,236
	Explosives	Biological Degradation	J.R. Simplot Company	The SABRE™ Process	V1,66
		Contaminant Survey Systems	Quadrel Services, Inc.	Emflux Soil-Gas Survey System	V3,54
			W.L. Gore and Associates, Inc.	GORE-SORBER Screening Survey	V3,82
		Physical/ Chemical Thermal Desorption	New Jersey Institute of Technology	GHEA Associates Process	V2,86
	Furans	Biological Degradation	Biotrol®	Soil Washing System	V1,40
			Institute of Gas Technology	Fluid Extraction - Biological Degradation Process	V2,58
		Materials Handling	U.S. EPA	Field Analytical Screening Program - PCB Method	V3,78
		Physical/ Chemical Thermal Desorption	ELI Eco Logic Inc.	Gas-Phase Chemical Reduction Process	V1,68
			ELI Eco Logic International, Inc.	Thermal Desorption Unit	V1,70
			Recycling Sciences International, Inc.	Desorption and Vapor Extraction System	V1,220
			SoilTech ATP Systems, Inc.	Anaerobic Thermal Processors	V1,150
			Roy F. Weston, Inc.	Low Temperature Thermal Treatment (LT3™) System	V1,174

APPLICABILITY INDEX (continued)

Media	Contaminants	Treatment Type	Technology Vendor	Technology	Volume, Page Number
Soil (continued)	Furans (continued)	Physical/ Chemical Treatment	Arctic Foundations, Inc.	Cryogenic Barrier	V1,190
			ART International, Inc.	Low-Energy Extraction Process (LEEP)	V2,20
			CF Systems Corp.	Liquified Gas Solvent Extraction (LG-SX) Technology	V1,48
			High Voltage Environmental Applications, Inc.	High-Energy Electron Irradiation	V1,94
			Ionics RCC	B.E.S.T. Solvent Extraction Technology	V1,104
			IT Corp.	Mixed Waste Treatment Process	V2,68
			National Risk Management Research Laboratory	Base, Catalyzed Decomposition Process	
			Terra-Kleen Response Group, Inc.	Solvent Extraction Treatment System	V1,158
			Trinity Environmental Technologies, Inc.	PCB- and Organochlorine-Contaminated Soil Detoxification	V2,104
		Portable Gas Chromatographs	Bruker Analytical Systems, Inc.	Mobile Environmental Monitor	V3,20
		Samplers	Geoprobe Systems	Large Bore Soil Sampler	V3,34
		Solidification/ Stabilization	Geosafe Corp.	GeoMelt Vitrification	V1,84
			WASTECH, Inc.	Solidification and Stabilization	V1,172
		Spectrometers	Graseby Ionics, Ltd., and PCP, Inc.	Ion Mobility Spectrometry	V3,36
		Thermal Destruction	BWX Technologies, Inc.	Cyclone Furnace	V1,44
			Energy and Environmental Research Corp.	Reactor Filter System	V2,42
			Institute of Gas Technology	Fluidized-Bed/Cyclonic Agglomerating Combustor	V2,60
			U. of Dayton Research Institute	Photothermal Detoxification Unit	V2,106
			Vortec Corp.	Vitrification Process	V1,236
	Gasoline	Contaminant Survey Systems	W.L. Gore and Associates, Inc.	GORE-SORBER Screening Survey	V3,82
		Materials Handling	National Risk Management Research Laboratory, The U. of Cincinnati, and FRX, Inc.	Hydraulic Fracturing	V1,124
		Physical/Chemical Thermal Desorption	SIVE Services	Steam Injection and Vacuum Extraction	V1,230
		Physical/ Chemical Treatment	Arctic Foundations, Inc.	Cryogenic Barrier	V1,190
		Samplers	Geoprobe Systems	Large Bore Soil Sampler	V3,34
	Halogenated VOCs	Biological Degradation	Harding Lawson Associates	Two Zone, Plume Interception. In Situ Treatment Technology	V2,48

APPLICABILITY INDEX (continued)

Media	Contaminants	Treatment Type	Technology Vendor	Technology	Volume, Page Number
Soil (continued)	Halogenated VOCs (continued)	Biological Degradation (continued)	Bio-Rem, Inc.	Augmented In Situ Subsurface Bioremediation Process	V1,34
			New York State Dept. of Environmental Conservation/R.E. Wright Environmental, Inc.	In Situ Bioventing Treatment System	V1,130
			IT Corp.	Oxygen Microbubble In Situ Bioremediation	V2,126
		Contaminant Survey Systems	W.L. Gore and Associates, Inc.	GORE-SORBER Screening Survey	V3,82
		Materials Handling	National Risk Management Research Laboratory. The U. of Cincinnati and FRX, Inc.	Hydraulic Fracturing	V1,124
			U.S. EPA	Excavation Techniques and Foam Suppression Methods	V1,166
		Physical/Chemical Treatment - Biological Degradation	Lasagna™ Public Private Partnership	Lasagna™ In Situ Soil Remediation	V1,202
		Physical/ Chemical Thermal Desorption	Hughes Environmental Systems, Inc.	Steam Enhanced Recovery Process	V1,100
			KAI Technologies, Inc./Brown and Root Environmental	Radio Frequency Heating	V1,106
			New Jersey Institute of Technology	GHEA Associates Process	V2,86
			NOVATERRA, Inc.	In-Situ Soil Treatments, (Steam/Air Stripping)	V1,134
			OHM Remediation Services Corp.	X*TAX™ Thermal Desorption	V1,136
			Recycling Sciences International, Inc.	Desorption and Vapor Extraction System	V1,220
			SoilTech ATP Systems, Inc.	Anaerobic Thermal Processor	V1,150
			Roy F. Weston, Inc.	Low Temperature Thermal Treatment (LT3™) System	V1,174
			Xerox Corp.	2-PHASE™ EXTRACTION Process	V1,180
		Physical/ Chemical Treatment	Arctic Foundations, Inc.	Cryogenic Barrier	V1,190
		Portable Gas Chromatographs	Bruker Analytical Systems, Inc.	Mobile Environmental Monitor	V3,20
			Photovac Monitoring Instruments	PE Photovac Voyager Portable Gas Chromatograph	V3,56
			SRI Instruments	Compact Gas Chromatograph	V3,66
			U.S. EPA	Field Analytical Screening Program - PCB Method	V3,78
		Samplers	Geoprobe Systems	Large Bore Soil Sampler	V3,34

APPLICABILITY INDEX (continued)

Media	Contaminants	Treatment Type	Technology Vendor	Technology	Volume, Page Number
Soil (continued)	Halogenated VOCs (continued)	Solidification/ Stabilization	Geo Con, Inc.	In Situ Solidification and Stabilization Process	V1,82
			Geosafe Corp.	GeoMelt Vitrification	V1,84
			WASTECH, Inc.	Solidification and Stabilization	V1,172
		Spectrometers	Graseby Ionics, Ltd., and PCP, Inc.	Ion Mobility Spectrometry	V3,36
		Test Kits	Dexsil Corp.	Environmental Test Kits	V3,26
		Thermal Destruction	Energy and Environmental Research Corp.	Hybrid Fluidized Bed System	V2,40
			Svedala Industries, Inc.	PYROKILN THERMAL ENCAPSULATION Process	V2,100
			Texaco Inc.	Texaco Gasification Process	V1,162
			U. of Dayton Research Institute	Photothermal Detoxification Unit	V2,106
			Vortec Corp.	Vitrification Process	V1,236
	Heavy Metals	Field Portable X-ray Fluorescence	C-THRU Technologies Corporation	Metal Analysis Probe (MAP®) Portable Assays	V3,22
		Solidification/Stabilization	Rocky Mountain Remediation Services, L.L.C.	Envirobond Solution	V1,222
			Star Organics, L.L.C.	Soil Rescue Remediation Fluid	V1,232
	Heavy Minerals	Materials Handling	Montana College of Mineral Science and Technology	Campbell Centrifugal Jig	V2,84
		Samplers	Art's Manufacturing and Supply	AMS™ Dual-Tube Liner Soil Sampler	V3,16
			Simulprobe Technologies, Inc.	Core Barrel Soil Sampler	V3,62
	Herbicides	Biological Degradation	Biotrol®	Soil Washing System	V1,40
			Electrokinetics, Inc.	In Situ Bioremediation by Electrokinetic Injection	V2,120
			GRACE Bioremediation Technologies	DARAMEND™ Bioremediation Technology	V1,90
			Institute of Gas Technology	Fluid Extraction - Biological Degradation Process	V2,58
			Phytokinetics, Inc.	Phytoremediation of Contaminated Soils	V2,128
			J.R. Simplot Company	The SABRE™ Process	V1,66
		Materials Handling	U.S. EPA	Excavation Techniques and Foam Suppression Methods	V1,166
		Physical Chemical Treatment - Biological Degradation	Lasagna™ Public Private Partnership	Lasagna™ In Situ Soil Remediation	V1,202
		Physical/ Chemical Thermal Desorption	ELI Eco Logic Inc.	Gas-Phase Chemical Reduction Process	V1,68
			ELI Eco Logic International, Inc.	Thermal Desorption Unit	V1,70

APPLICABILITY INDEX (continued)

Media	Contaminants	Treatment Type	Technology Vendor	Technology	Volume, Page Number
Soil (continued)	Herbicides (continued)	Physical/ Chemical Thermal Desorption (continued)	Maxymillian Technologies, Inc.	Thermal Desorption System	V1,112
			OHM Remediation Services Corp.	X*TAX™ Thermal Desorption	V1,136
			Recycling Sciences International, Inc.	Desorption and Vapor Extraction System	V1,220
			Smith Environmental Technologies Corp.	Low Temperature Thermal Aeration (LTTA®)	V1,148
			SoilTech ATP Systems, Inc.	Anaerobic Thermal Processors	V1,150
			Roy F. Weston, Inc.	Low Temperature Thermal Treatment (LT3™) System	V1,174
		Physical/ Chemical Treatment	Arctic Foundations, Inc.	Cryogenic Barrier	V1,190
			ART International, Inc.	Low-Energy Extraction Process (LEEP)	V2,20
			Bergmann, A Division of Linatex, Inc.	Soil and Sediment Washing	V1,26
			Center for Hazardous Materials Research	Organics Destruction and Metals Stabilization	V2,32
			CF Systems Corp.	Liquified Gas Solvent Extraction (LG-SX) Technology	V1,48
			High Voltage Environmental Applications, Inc.	High-Energy Electron Irradiation	V1,94
			Ionics RCC	B.E.S.T. Solvent Extraction Technology	V1,104
			IT Corp.	Mixed Waste Treatment Process	V2,68
			National Risk Management Research Laboratory	Base-Catalyzed Decomposition Process	V1,116
		Portable Gas Chromatographs	Bruker Analytical Systems, Inc.	Mobile Environmental Monitor	V3,20
		Samplers	Geoprobe Systems	Large Bore Soil Sampler	V3,34
		Solidification/ Stabilization	Chemfix Technologies, Inc.	Solidification and Stabilization	V1,50
			WASTECH, Inc.	Solidification and Stabilization	V1,172
		Spectrometers	Graseby Ionics, Ltd., and PCP, Inc.	Ion Mobility Spectrometry	V3,36
		Test Kits	Strategic Diagnostic, Inc. Corp.	(RaPID Assay®)	V3,72
		Thermal Destruction	BWX Technologies, Inc.	Cyclone Furnace	V1,44
			U. of Dayton Research Institute	Photothermal Detoxification Unit	V2,106
			Vortec Corp.	Vitrification Process	V1,236
	Mercury	Contaminant Survey Systems	Quadrel Services, Inc.	Emflux Soil-Gas Survey System	V3,54
			Radiometer Analytical Group	Anodic Voltammetry for Mercury in Soil	V3,58
		Physical/ Chemical Treatment	Bionebraska, Inc.	BiMelyze® Mercury Immunoassay	V3,18

APPLICABILITY INDEX (continued)

Media	Contaminants	Treatment Type	Technology Vendor	Technology	Volume, Page Number
Soil (continued)	Metals	Biological Degradation	COGNIS, Inc.	Biological/Chemical Treatment	V1,52
			Geo-Microbial Technologies, Inc.	Metals Release and Removal of Wastes	V2,124
			Phytotech	Phytoremediation Technology	V1,212
			Pintail Systems, Inc.	Biomineralization of Metals	V2,130
			Pintail Systems, Inc.	Spent Ore Bioremediation Process	V1,214
		Contaminant Survey Systems	W.L. Gore and Associates, Inc.	GORE-SORBER Screening Survey	V3,82
		Field Portable X-ray Fluorescence	Metorex, Inc.	Field Portable X-Ray Fluorescence Analysis	V3,48
			NITON Corp.	XL Spectrum Analyzer	V3,52
			C-THRU Technologies Corporation	Metal Analysis Probe (MAP®) Portable Assays	V3,22
			TN Spectrace	9000 X-Ray Fluorescence Analyzer and Lead X-Ray Fluorescence Analyzer	V3,74
		Materials Handling	AEA Technology Environment	Soil Separation and Washing Process	V2,16
			Montana College of Mineral Science and Technology	Air-Sparged Hydrocyclone	V2,82
			Montana College of Mineral Science and Technology	Campbell Centrifugal Jig	V2,84
			U.S. EPA	Excavation Techniques and Foam Suppression Methods	V1,166
			U. of South Carolina	In Situ Mitigation of Acid Water	V2,108
		Physical Chemical Treatment - Biological Degradation	Lasagna™ Public Private Partnership	Lasagna™ In Situ Soil Remediation	V1,202
		Physical/ Chemical Thermal Desorption	New Jersey Institute of Technology	GHEA Associates Process	V2,86
			Geotech Development Corp.	Cold Top Ex Situ Verification of Chromium-Contaminated Soils	V1,86
		Physical/ Chemical Treatment	Arctic Foundations, Inc.	Cryogenic Barrier	V1,190
			Battelle Memorial Institute	In Situ Electroacoustic Soil Decontamination	V2,26
			Bergmann. A Division of Linatex, Inc.	Soil and Sediment Washing	V1,26
			BioGenesis Enterprises, Inc.	BioGenesisSM Soil & Sediment Washing Process	V1,32
			Brice Environmental Services Corp.	Soil Washing Process	V1,42
			Center for Hazardous Materials Research	Acid Extraction Treatment System	V2,30
			COGNIS, Inc.	TERRAMET Soil Remediation System	V1,52
			Electrokinetics, Inc.	Electrokinetic Soil Processing	V1,66

APPLICABILITY INDEX (continued)

Media	Contaminants	Treatment Type	Technology Vendor	Technology	Volume, Page Number
Soil (continued)	Metals (continued)	Physical/ Chemical Treatment (continued)	General Atomics, Nuclear Remediation Technologies Division	Acoustic Barrier Particulate Separator	V2,48
			IT Corp.	Batch Steam Distillation and Metal Extraction	V2,64
			IT Corp.	Chelation/Electrodeposition of Toxic Metals from Soils	V2,66
			IT Corp.	Mixed Waste Treatment Process	V2,68
			Lewis Environmental Services, Inc./Hickson Corp.	Chromated Copper Arsenate Soil Leaching Process	V2,76
			Morrison Knudsen Corp./Spetstamponazhgeologia Enterprises/STG Technologies	Clay-Base Grouting Technology	V1,114
			National Risk Management Research Laboratory	Volume Reduction Unit	V1,118
			Sandia National Laboratories	In Situ Electrokinetic Extraction System	V1,224
			Toronto Harbour Commission	Soil Recycling	V1,162
			U. of Houston	Concentrated Chlorine Extraction and Recovery of Lead	V2,136
		Portable Gas Chromatographs	HNU Systems, Inc.	HNU GC 311D Portable Gas Chromatograph	V3,42
		Samplers	Art's Manufacturing and Supply	AMS™ Dual-Tube Liner Soil Sampler	V3,16
			Geoprobe Systems	Large Bore Soil Sampler	V3,34
			Simulprobe Technologies, Inc.	Core Barrel Soil Sampler	V3,62
		Solidification/ Stabilization	Chemfix Technologies, Inc.	Solidification and Stabilization	V1,50
			Ferro Corp.	Waste Vitrification Through Electric Melting	V2,46
			Funderburk & Associates	Dechlorination and Immobilization	V1,78
			Geo-Con, Inc.	In Situ Solidification and Stabilization Process	V1,82
			Geosafe Corp.	GeoMelt Vitrification	V1,84
			Rocky Mountain Remediation Services, L.L.C.	Envirobond Solution	V1,222
			Sevenson Environmental Services, Inc.	MAECTITE® Chemical Treatment Process	V1,228
			Soliditech, Inc.	Solidification and Stabilization	V1,152
			Star Organics, L.L.C.	Soil Rescue Remediation Fluid	V1,232
			STC Remediation. A Division of Omega Environmental, Inc.	Organic Stabilization and Chemical Fixation/Solidification	V1,156

APPLICABILITY INDEX (continued)

Media	Contaminants	Treatment Type	Technology Vendor	Technology	Volume, Page Number
Soil (continued)	Metals (continued)	Solidification/ Stabilization (continued)	WASTECH, Inc.	Solidification and Stabilization	V1,172
			Western Product Recovery Group, Inc.	Coordinate, Chemical Bonding, and Adsorption Treatment	V2,114
		Thermal Destruction	American Combustion, Inc.	PYRETRON® Thermal Destruction	V1,22
			BWX Technologies, Inc.	Cyclone Furnace	V1,44
			Concurrent Technologies	Smelting Lead-Containing Wastes	V2,34
			Energy and Environmental Research Corp.	Hybrid Fluidized Bed System	V2,40
			Energy and Environmental Research Corp.	Reactor Filter System	V2,42
			Horsehead Resource Development Co., Inc.	Flame Reactor	V1,96
			Institute of Gas Technology	Fluidized-Bed/Cyclonic Agglomerating Combustor	V2,60
			PSI Technologies, A Division of Physical Sciences Inc.	Metals Immobilization and Decontamination of Aggregate Solids	V2,88
			Svedala Industries, Inc.	PYROKILN THERMAL ENCAPSULATION Process	V2,100
			Vortec Corp.	Vitrification Process	V1,236
	Organics	Physical/ Chemical Treatment	Arctic Foundations, Inc.	Cryogenic Barrier	V1,190
		Sensors	Geoprobe Systems	Geoprobe Conductivity System	V3,32
		Thermal Destruction	Gruppo Italimpresse	Infrared Thermal Destruction	V1,92
	PAHs	Biological Degradation	COGNIS, Inc.	Biological/Chemical Treatment	V2,36
			ECOVA Corp.	Bioslurry Reactor	V1,64
			Environmental BioTechnologies, Inc.	Fungal Degradation Process	V2,44
			Institute of Gas Technology	Fluid Extraction - Biological Degradation Process	V2,58
			Remediation Technologies, Inc.	Liquid and Solids Biological Treatment	V1,140
		Cone Penetrometers	Space and Naval Warfare Systems Center	SCAPS Cone Penetrometer	V3,64
		Contaminant Survey Systems	W.L. Gore and Associates, Inc.	GORE-SORBER Screening Survey	V3,82
		Physical/ Chemical Thermal Desorption	Geokinetics International, Inc.	Electroheat-Enhanced Nonaqueous Phase Liquids Removal	V1,196
			Maxymillian Technologies, Inc.	Thermal Desorption System	V1,112
			Recycling Sciences International, Inc.	Desorption and Vapor Extraction System	V1,220
		Physical/ Chemical Treatment	Arctic Foundations, Inc.	Cryogenic Barrier	V1,190
			Bergmann. A Division of Linatex, Inc.	Soil and Sediment Washing	V1,26

APPLICABILITY INDEX (continued)

Media	Contaminants	Treatment Type	Technology Vendor	Technology	Volume, Page Number
Soil (continued)	PAHs (continued)	Physical/ Chemical Treatment (continued)	BioGenesis Enterprises, Inc.	BioGenesis™ Soil & Sediment Washing Process	V1,32
		Portable Gas Chromatograph	Bruker Analytical Systems, Inc.	Mobile Environmental Monitor	V3,20
		Samplers	Clements, Inc.	JMC Environmental Subsoil Probe	V3,24
		Sensors	Fugro Geosciences, Inc.	Rapid Optical Screening Tool	V3,30
	PCBs	Biological Degradation	Institute of Gas Technology	Chemical and Biological Treatment	V2,56
			Institute of Gas Technology	Fluid Extraction - Biological Degradation Process	V2,58
			Phytokinetics, Inc.	Phytoremediation of Contaminated Soils	V2,128
			Phytokinetics, Inc.	Phytoremediation Process	V1,210
		Field Portable X-ray Fluorescence	Metorex, Inc.	Field Portable X-Ray Fluorescence Analysis	V3,48
		Materials Handling	U.S. EPA	Excavation Techniques and Foam Suppression Methods	V1,166
		Physical/ Chemical Thermal Desorption	Biotherm, LCC	Biotherm Process	V1,36
			ELI Eco Logic Inc.	Gas-Phase Chemical Reduction Process	V1,68
			ELI Eco Logic International, Inc.	Thermal Desorption Unit	V1,70
			KAI Technologies, Inc./Brown and Root Environmental	Radio Frequency Heating	V1,106
			New Jersey Institute of Technology	GHEA Associates Process	V2,86
			OHM Remediation Services Corp.	X*TAX™ Thermal Desorption	V1,136
			Recycling Sciences International, Inc.	Desorption and Vapor Extraction System	V1,220
			SoilTech ATP Systems, Inc.	Anaerobic Thermal Processors	V1,150
			Roy F. Weston, Inc.	Low Temperature Thermal Treatment (LT3™) System	V1,174
		Physical/ Chemical Treatment	Arctic Foundations, Inc.	Cryogenic Barrier	V1,190
			ART International, Inc.	Low-Energy Extraction Process (LEEP)	V2,20
			Bergmann, A Division of Linatex, Inc.	Soil and Sediment Washing	V1,26
			BioGenesis Enterprises, Inc.	BioGenesisSM Soil & Sediment Washing Process	V1,32
			Center for Hazardous Materials Research	Organics Destruction and Metals Stabilization	V2,32
			CF Systems Corp.	Liquified Gas Solvent Extraction (LG-SX) Technology	V1,48

APPLICABILITY INDEX (continued)

Media	Contaminants	Treatment Type	Technology Vendor	Technology	Volume, Page Number
Soil (continued)	PCBs (continued)	Physical/Chemical Treatment (continued)	Commodore Environmental Services, Inc.	Solvated Electron Remediation System	V1,56
			General Atomics	Circulating Bed Combustor	V1,80
			High Voltage Environmental Applications, Inc.	High-Energy Electron Irradiation	V1,94
			Ionics RCC	B.E.S.T. Solvent Extraction Technology	V1,104
			IT Corp.	Mixed Waste Treatment Process	V2,68
			IT Corp.	Photolytic and Biological Soil Detoxification	V2,70
			Morrison Knudsen Corp./Spetstamponazhgeologia Enterprises/STG Technologies	Clay-Base Grouting Technology	V1,114
			National Risk Management Research Laboratory	Base-Catalyzed Decomposition Process	V1,116
			State U. of New York at Oswego, Environmental Research Center	Electrochemical Peroxidation of PCB-Contaminated Sediments and Waters	V2,98
			Terra-Kleen Response Group, Inc.	Solvent Extraction Treatment System	V1,158
			Trinity Environmental Technologies, Inc.	PCB- and Organochlorine-Contaminated Soil Detoxification	V2,104
		Portable Gas Chromatographs	Bruker Analytical Systems, Inc.	Mobile Environmental Monitor	V3,20
			HNU Systems, Inc.	HNU GC 311D Portable Gas Chromatograph	V3,42
			SRI Instruments	Compact Gas Chromatograph	V3,66
			U.S. EPA	Field Analytical Screening Program - PCB Method	V3,78
		Samplers	Clements, Inc.	JMC Environmental Subsoil Probe	V3,24
			Geoprobe Systems	Large Bore Soil Sampler	V3,34
		Solidification/ Stabilization	Chemfix Technologies, Inc.	Solidification and Stabilization	V1,50
			Funderburk & Associates	Dechlorination and Immobilization	V1,78
			Geo-Con, Inc.	In Situ Solidification and Stabilization Process	V1,82
			Geosafe Corp.	GeoMelt Vitrification	V1,84
			Soliditech, Inc.	Solidification and Stabilization	V1,152
			WASTECH, Inc.	Solidification and Stabilization	V1,172
		Test Kits	Dexsil Corp.	Environmental Test Kits	V3,26
			Hanby Environmental Laboratory Procedure, Inc.	Test Kits for Organic Contaminants in Soil and Water	V3,38

APPLICABILITY INDEX (continued)

Media	Contaminants	Treatment Type	Technology Vendor	Technology	Volume, Page Number
Soil (continued)	PCBs (continued)	Test Kits (continued)	Strategic Diagnostic, Inc.	EnviroGard™ PCB Immunoassay Test Kit	V3,70
		Thermal Destruction	BWX Technologies, Inc.	Cyclone Furnace	V1,44
			Energy and Environmental Research Corp.	Hybrid Fluidized Bed System	V2,40
			Institute of Gas Technology	Fluidized-Bed/Cyclonic Agglomerating Combustor	V2,60
			U. of Dayton Research Institute	Photothermal Detoxification Unit	V2,106
			Vortec Corp.	Vitrification Process	V1,236
	PCP	Biological Degradation	Remediation Technologies, Inc.	Liquid and Solids Biological Treatment	V1,140
		Physical/ Chemical Treatment	Arctic Foundations, Inc.	Cryogenic Barrier	V1,190
		Portable Gas Chromatographs	U.S. EPA	Field Analytical Screening Program - PCP Method	V3,80
		Physical/ Chemical Thermal Desorption	Recycling Sciences International, Inc.	Desorption and Vapor Extraction System	V1,220
		Physical/ Chemical Treatment	National Risk Management Research Laboratory	Volume Reduction Unit	V1,118
			Trinity Environmental Technologies, Inc.	PCB- and Organochlorine-Contaminated Soil Detoxification	V2,104
		Test Kits	Strategic Diagnostic, Inc.	Ensys Penta Test System	V3,68
			Strategic Diagnostic, Inc.	EnviroGard™ PCB Immunoassay Test Kit	V3,70
			Strategic Diagnostic, Inc. Corp.	(RaPID Assay®)	V3,72
	Pesticides	Biological Degradation	Biotrol®	Soil Washing System	V1,40
			Electrokinetics, Inc.	In Situ Bioremediation by Electrokinetic Injection	V2,120
			GRACE Bioremediation Technologies	DARAMEND™ Bioremediation Technology	V1,90
			Institute of Gas Technology	Chemical and Biological Treatment	V2,56
			Institute of Gas Technology	Fluid Extraction - Biological Degradation Process	V2,58
			Phytokinetics, Inc.	Phytoremediation of Contaminated Soils	V2,128
			Phytokinetics, Inc.	Phytoremediation Process	V1,210
		Contaminant Survey Systems	W.L. Gore and Associates, Inc.	GORE-SORBER Screening Survey	V3,82
		Materials Handling	U.S. EPA	Excavation Techniques and Foam Suppression Methods	V1,166
		Physical/ Chemical Thermal Desorption	Biotherm, LCC	Biotherm Process	V1,36

APPLICABILITY INDEX (continued)

Media	Contaminants	Treatment Type	Technology Vendor	Technology	Volume, Page Number
Soil (continued)	Pesticides (continued)	Physical/ Chemical Thermal Desorption (continued)	ELI Eco Logic Inc.	Gas-Phase Chemical Reduction Process	V1,68
			ELI Eco Logic International, Inc.	Thermal Desorption Unit	V1,70
			KAI Technologies, Inc./Brown and Root Environmental	Radio Frequency Heating	V1,106
			OHM Remediation Services Corp.	X*TAX™ Thermal Desorption	V1,136
			Recycling Sciences International, Inc.	Desorption and Vapor Extraction System	V1,220
			Smith Environmental Technologies Corp.	Low, Temperature Thermal Aeration (LTTA)	V1,148
			SoilTech ATP Systems, Inc.	Anaerobic Thermal Processors	V1,150
			Roy F. Weston, Inc.	Low Temperature Thermal Treatment (LT3™) System	V1,174
		Physical/ Chemical Treatment	Arctic Foundations, Inc.	Cryogenic Barrier	V1,190
			ART International, Inc.	Low-Energy Extraction Process (LEEP)	V2,20
			Bergmann, A Division of Linatex, Inc.	Soil and Sediment Washing	V1,26
			Center for Hazardous Materials Research	Organics Destruction and Metals Stabilization	V2,32
			CF Systems Corp.	Liquified Gas Solvent Extraction (LG-SX) Technology	V1,48
			Commodore Environmental Services, Inc.	Solvated Electron Remediation System	V1,56
			Electrokinetics, Inc.	Electrokinetic Soil Processing	V1,66
			General Atomics	Circulating Bed Combustor	V1,80
			High Voltage Environmental Applications, Inc.	High-Energy Electron Irradiation	V1,94
			Ionics RCC	B.E.S.T. Solvent Extraction Technology	V1,104
			IT Corp.	Mixed Waste Treatment Process	V2,68
			IT Corp.	Photolytic and Biological Soil Detoxification	V2,70
			Morrison Knudsen Corp./Spetstamponazhgeologia Enterprises/STG Technologies	Clay-Base Grouting Technology	V1,114
			National Risk Management Research Laboratory	Base-Catalyzed Decomposition Process	V1,116
			State U. of New York at Oswego, Environmental Research Center	Electrochemical Peroxidation of PCB-Contaminated Sediments and Waters	V2,98

APPLICABILITY INDEX (continued)

Media	Contaminants	Treatment Type	Technology Vendor	Technology	Volume, Page Number
Soil (continued)	Pesticides (continued)	Physical/ Chemical Treatment (continued)	Terra-Kleen Response Group, Inc.	Solvent Extraction Treatment System	V1,158
			Trinity Environmental Technologies, Inc.	PCB- and Organochlorine-Contaminated Soil Detoxification	V2,104
		Portable Gas Chromatographs	Bruker Analytical Systems, Inc.	Mobile Environmental Monitor	V3,20
			SRI Instruments	Compact Gas Chromatograph	V3,66
			U.S. EPA	Field Analytical Screening Program - PCB Method	V3,78
		Samplers	Art's Manufacturing and Supply	AMS™ Dual-Tube Liner Soil Sampler	V3,16
			Clements, Inc.	JMC Environmental Subsoil Probe	V3,24
			Geoprobe Systems	Large Bore Soil Sampler	V3,34
			Simulprobe Technologies, Inc.	Core Barrel Soil Sampler	V3,62
		Solidification/ Stabilization	Chemfix Technologies, Inc.	Solidification and Stabilization	V1,50
			Funderburk & Associates	Dechlorination and Immobilization	V1,78
			Geo-Con, Inc.	In Situ Solidification and Stabilization Process	V1,82
			Geosafe Corp.	GeoMelt Vitrification	V1,84
			Soliditech, Inc.	Solidification and Stabilization	V1,152
			WASTECH, Inc.	Solidification and Stabilization	V1,172
		Spectrometers	Graseby Ionics, Ltd., and PCP, Inc.	Ion Mobility Spectrometry	V3,36
		Test Kits	Dexsil Corp.	Environmental Test Kits	V3,26
			Strategic Diagnostic, Inc.	Ensys Penta Test System	V3,68
			Hanby Environmental Laboratory Procedure, Inc.	Test Kits for Organic Contaminants in Soil and Water	V3,38
			Strategic Diagnostic, Inc. Corp.	RaPID Assay®	V3,72
		Thermal Destruction	BWX Technologies, Inc.	Cyclone Furnace	V1,44
			Energy and Environmental Research Corp.	Hybrid Fluidized Bed System	V2,40
			Institute of Gas Technology	Fluidized-Bed/Cyclonic Agglomerating Combustor	V2,60
			U. of Dayton Research Institute	Photothermal Detoxification Unit	V2,106
			Vortec Corp.	Vitrification Process	V1,236
	Petroleum Hydrocarbons	Biological Degradation	COGNIS, Inc.	Biological/Chemical Treatment	V2,36
			ECOVA Corp.	Bioslurry Reactor	V1,64

APPLICABILITY INDEX (continued)

Media	Contaminants	Treatment Type	Technology Vendor	Technology	Volume, Page Number
Soil (continued)	Petroleum Hydrocarbons (continued)	Biological Degradation (continued)	Hazardous Substance Management Research Center at New Jersey Institute of Technology, and Rutgers, the State U. of New Jersey	Pneumatic Fracturing and Bioremediation Process	V2,52
			Remediation Technologies, Inc.	Liquid and Solids Biological Treatment	V1,140
		Cone Penetrometers	Space and Naval Warfare Systems Center	SCAPS Cone Penetrometer	V3,64
			Tri-Services	Site Characterization Analysis Penetrometer System (SCAPS)	V3,76
		Contaminant Survey Systems	W.L. Gore and Associates, Inc.	GORE-SORBER Screening Survey	V3,82
		Materials Handling	National Risk Management Research Laboratory. The U. of Cincinnati and FRX, Inc.	Hydraulic Fracturing	V1,124
		Physical/ Chemical Thermal Desorption	New Jersey Institute of Technology	GHEA Associates Process	V2,86
			SIVE Services	Steam Injection and Vacuum Extraction	V1,230
			Smith Environmental Technologies Corp.	Low, Temperature Thermal Aeration (LTTA®)	V1,148
		Physical/ Chemical Treatment	Arctic Foundations, Inc.	Cryogenic Barrier	V1,190
		Portable Gas Chromatographs	SRI Instruments	Compact Gas Chromatograph	V3,66
		Solidification/ Stabilization	Soliditech, Inc.	Solidification and Stabilization	V1,152
	Radionuclides	Materials Handling	Thermo Nutech, Inc.	Segmented Gate System	V2,134
		Physical/ Chemical Treatment	Arctic Foundations, Inc.	Cryogenic Barrier	V1,190
			Bergmann, A Division of Linatex, Inc.	Soil and Sediment Washing	V1,26
			IT Corp.	Mixed Waste Treatment Process	V2,68
		Solidification/ Stabilization	Sevenson Environmental Services, Inc.	MAECTITE® Chemical Treatment Process	V1,228
			WASTECH, Inc.	Solidification and Stabilization	V1,172
		Thermal Destruction	BWX Technologies, Inc.	Cyclone Furnace	V1,44
	SVOCs	Biological Degradation	Harding Lawson Associates	Two Zone, Plume Interception. In Situ Treatment Technology	V2,48
			Biotrol®	Soil Washing System	V1,40
			ECOVA Corp.	Bioslurry Reactor	V1,64
			GRACE Bioremediation Technologies	DARAMEND™ Bioremediation Technology	V1,90
			Institute of Gas Technology	Chemical and Biological Treatment	V2,56

APPLICABILITY INDEX (continued)

Media	Contaminants	Treatment Type	Technology Vendor	Technology	Volume, Page Number
Soil (continued)	SVOCs (continued)	Biological Degradation (continued)	Institute of Gas Technology	Fluid Extraction - Biological Degradation Process	V2,58
			National Risk Management Research Laboratory	Bioventing	V1,208
			National Risk Management Research Laboratory and INTECH 180 Corp.	Fungal Treatment Technology	V1,120
			New York State Dept. of Environment Conservation/ENSR Consulting and Larson Engineers	Ex Situ Biovault	V1,126
			New York State Dept. of Environmental Conservation/R.E. Wright Environmental, Inc.	In Situ Bioventing Treatment System	V1,130
			IT Corp.	Oxygen Microbubble In Situ Bioremediation	V2,126
			Remediation Technologies, Inc.	Liquid and Solids Biological Treatment	V1,140
		Contaminant Survey Systems	Quadrel Services, Inc.	Emflux Soil-Gas Survey System	V3,54
			W.L. Gore and Associates, Inc.	GORE-SORBER Screening Survey	V3,82
		Materials Handling	U.S. EPA	Excavation Techniques and Foam Suppression Methods	V1,166
		Physical/ Chemical Thermal Desorption	Biotherm, LCC	Biotherm Process	V1,36
			ELI Eco Logic Inc.	Gas-Phase Chemical Reduction Process	V1,68
			ELI Eco Logic International, Inc.	Thermal Desorption Unit	V1,70
			IIT Research Institute/Brown and Root Environmental	Radio Frequency Heating	V1,102
			KAI Technologies, Inc./Brown and Root Environmental	Radio Frequency Heating	V1,106
			Maxymillian Technologies, Inc.	Thermal Desorption System	V1,112
			New Jersey Institute of Technology	GHEA Associates Process	V2,86
			NOVATERRA, Inc.	In-Situ Soil Treatments, (Steam/Air Stripping)	V1,134
			OHM Remediation Services Corp.	X*TAX™ Thermal Desorption	V1,136
			Recycling Sciences International, Inc.	Desorption and Vapor Extraction System	V1,220

APPLICABILITY INDEX (continued)

Media	Contaminants	Treatment Type	Technology Vendor	Technology	Volume, Page Number
Soil (continued)	SVOCs (continued)	Physical/ Chemical Thermal Desorption (continued)	SIVE Services	Steam Injection and Vacuum Extraction	V1,230
			Smith Environmental Technologies Corp.	Low, Temperature Thermal Aeration (LTTA®)	V1,148
			SoilTech ATP Systems, Inc.	Anaerobic Thermal Processors	V1,150
			Roy F. Weston, Inc.	Low Temperature Thermal Treatment (LT3™) System	V1,174
		Physical/ Chemical Treatment	Arctic Foundations, Inc.	Cryogenic Barrier	V1,190
			ARS Technologies, Inc.	Pneumatic Fracturing Extraction™ and Catalytic Oxidation	V1,24
			Bergmann, A Division of Linatex, Inc.	Soil and Sediment Washing	V1,26
			Center for Hazardous Materials Research	Organics Destruction and Metals Stabilization	V2,32
			CF Systems Corp.	Liquified Gas Solvent Extraction (LG-SX) Technology	V1,48
			Electrokinetics, Inc.	Electrokinetic Soil Processing	V1,66
			Energia, Inc.	Reductive Thermal and Photo-Thermal Oxidation Processes for Enhanced Conversion of Chlorocarbons	V2,122
			High Voltage Environmental Applications, Inc.	High-Energy Electron Irradiation	V1,94
			Hrubetz Environmental Services, Inc.	HRUBOUT® Process	V1,98
			Ionics RCC	B.E.S.T. Solvent Extraction Technology	V1,104
			IT Corp.	Mixed Waste Treatment Process	V2,68
			National Risk Management Research Laboratory	Base-Catalyzed Decomposition Process	V1,116
			National Risk Management Research Laboratory	Volume Reduction Unit	V1,118
			Terra-Kleen Response Group, Inc.	Solvent Extraction Treatment System	V1,158
			Terra Vac, Inc.	In Situ and Ex Situ Vacuum Extraction	V1,160
			Toronto Harbour Commission	Soil Recycling	V1,162
			Roy F. Weston, Inc./IEG Technologies	UVB - Vacuum Vaporizing Well	V1,176
			Xerox Corp.	2-PHASE™ EXTRACTION Process	V1,180
		Portable Gas Chromatographs	Bruker Analytical Systems, Inc.	Mobile Environmental Monitor	V3,20
			U.S. EPA	Field Analytical Screening Program - PCB Method	V3,78

APPLICABILITY INDEX (continued)

Media	Contaminants	Treatment Type	Technology Vendor	Technology	Volume, Page Number
Soil (continued)	SVOCs (continued)	Samplers	Art's Manufacturing and Supply	AMS™ Dual-Tube Liner Soil Sampler	V3,16
			Geoprobe Systems	Large Bore Soil Sampler	V3,34
			Simulprobe Technologies, Inc.	Core Barrel Soil Sampler	V3,62
		Solidification/ Stabilization	Chemfix Technologies, Inc.	Solidification and Stabilization	V1,50
			Geo-Con, Inc.	In Situ Solidification and Stabilization Process	V1,82
			STC Remediation. A Division of Omega Environmental, Inc.	Organic Stabilization and Chemical Fixation/Solidification	V1,156
			WASTECH, Inc.	Solidification and Stabilization	V1,172
			Western Product Recovery Group, Inc.	Coordinate, Chemical Bonding, and Adsorption Treatment	V2,114
		Spectrometers	Graseby Ionics, Ltd., and PCP, Inc.	Ion Mobility Spectrometry	V3,36
		Test Kits	Strategic Diagnostic, Inc. Corp.	RaPID Assay®	V3,72
		Thermal Destruction	BWX Technologies, Inc.	Cyclone Furnace	V1,44
			Institute of Gas Technology	Fluidized-Bed/Cyclonic Agglomerating Combustor	V2,60
			Sonotech, Inc.	Frequency-Tunable Pulse Combustion System	V1,154
			Svedala Industries, Inc.	PYROKILN THERMAL ENCAPSULATION Process	V2,100
			Texaco Inc.	Texaco Gasification Process	V1,162
			U. of Dayton Research Institute	Photothermal Detoxification Unit	V2,106
			Vortec Corp.	Vitrification Process	V1,236
		Other	Berkeley Environmental Restoration Center	In Situ Stream Enhanced Extraction Process	V1,28
	VOCs	Biological Degradation	Billings and Associates, Inc.	Subsurface Volatilization and Ventilation System (SVVS®)	V1,30
			Bio-Rem, Inc.	Augmented In Situ Subsurface Bioremediation Process	V1,34
			ECOVA Corp.	Bioslurry Reactor	V1,64
			Electrokinetics, Inc.	In Situ Bioremediation by Electrokinetic Injection	V2,120
			National Risk Management Research Laboratory	Bioventing	V1,208
			New York State Dept. of Environment Conservation/ENSR Consulting and Larson Engineers	Ex Situ Biovault	V1,126

APPLICABILITY INDEX (continued)

Media	Contaminants	Treatment Type	Technology Vendor	Technology	Volume, Page Number
Soil (continued)	VOCs (continued)	Biological Degradation (continued)	New York State Dept. of Environmental Conservation/R.E. Wright Environmental, Inc.	In Situ Bioventing Treatment System	V1,130
			New York State Dept. of Environmental Conservation/SBP Technologies, Inc.	Vacuum-Vaporized Well System	V1,128
			IT Corp.	Oxygen Microbubble In Situ Bioremediation	V2,126
			Phytokinetics, Inc.	Phytoremediation of Contaminated Soils	V2,128
			Phytokinetics, Inc.	Phytoremediation Process	V1,210
		Contaminant Survey Systems	Quadrel Services, Inc.	Emflux Soil-Gas Survey System	V3,54
			W.L. Gore and Associates, Inc.	GORE-SORBER Screening Survey	V3,82
		Materials Handling	AEA Technology Environment	Soil Separation and Washing Process	V2,16
			National Risk Management Research Laboratory. The U. of Cincinnati and FRX, Inc.	Hydraulic Fracturing	V1,124
			U.S. EPA	Excavation Techniques and Foam Suppression Methods	V1,166
		Physical/ Chemical Thermal Desorption	Biotherm, LCC	Biotherm Process	V1,36
			Geokinetics International, Inc.	Electroheat-Enhanced Nonaqueous Phase Liquids Removal	V1,196
			Hughes Environmental Systems, Inc.	Steam Enhanced Recovery Process	V1,100
			IIT Research Institute/Brown and Root Environmental	Radio Frequency Heating	V1,102
			KAI Technologies, Inc./Brown and Root Environmental	Radio Frequency Heating	V1,106
			Maxymillian Technologies, Inc.	Thermal Desorption System	V1,112
			New Jersey Institute of Technology	GHEA Associates Process	V2,86
			NOVATERRA, Inc.	In-Situ Soil Treatments, (Steam/Air Stripping)	V1,134
			Praxis Environmental Technologies, Inc.	In Situ thermally Enhanced Extraction (TEE) Process	V1,216
			Recycling Sciences International, Inc.	Desorption and Vapor Extraction System	V1,220
			SIVE Services	Steam Injection and Vacuum Extraction	V1,230

APPLICABILITY INDEX (continued)

Media	Contaminants	Treatment Type	Technology Vendor	Technology	Volume, Page Number
Soil (continued)	VOCs (continued)	Physical/ Chemical Thermal Desorption (continued)	Smith Environmental Technologies Corp.	Low, Temperature Thermal Aeration (LTTA®)	V1,148
			SoilTech ATP Systems, Inc.	Anaerobic Thermal Processor	V1,150
			Roy F. Weston, Inc.	Low Temperature Thermal Treatment (LT3™) System	V1,174
		Physical/ Chemical Treatment	Arctic Foundations, Inc.	Cryogenic Barrier	V1,190
			ARS Technologies, Inc.	Pneumatic Fracturing Extraction™ and Catalytic Oxidation	V1,24
			Arizona State U./Zentox Corp.	Photocatalytic Oxidation with Air Stripping	V2,18
			Berkeley Environmental Restoration Center	In Situ Stream Enhanced Extraction Process	V1,28
			CF Systems Corp.	Liquified Gas Solvent Extraction (LG-SX) Technology	V1,48
			Radian International LCC	Integrated Vapor Extraction and Steam Vacuum Stripping and Soil Vapor Extraction/Reinjection	V1,138
			Energia, Inc.	Reductive Photo-Dechlorination Treatment	V2,38
			Energia, Inc.	Reductive Thermal and Photo-Thermal Oxidation Processes for Enhanced Conversion of Chlorocarbons	V2,122
			High Voltage Environmental Applications, Inc.	High-Energy Electron Irradiation	V1,94
			Hrubetz Environmental Services, Inc.	HRUBOUT® Process	V1,98
			Institute of Gas Technology	Supercritical Extraction/Liquid Phase Oxidation	V2,62
			Ionics RCC	B.E.S.T. Solvent Extraction Technology	V1,104
			IT Corp.	Batch Steam Distillation and Metal Extraction	V2,64
			IT Corp.	Mixed Waste Treatment Process	V2,68
			KSE, Inc.	Adsorption-Integrated-Reaction Process	V1,200/ V2,24
			Morrison Knudsen Corp./Spetstamponazhgeologia Enterprises/STG Technologies	Clay-Base Grouting Technology	V1,114
			National Risk Management Research Laboratory	Volume Reduction Unit	V1,118
			Pulse Sciences, Inc.	X Ray Treatment of Organically Contaminated Soils	V2,132
			Terra-Kleen Response Group, Inc.	Solvent Extraction Treatment System	V1,158

APPLICABILITY INDEX (continued)

Media	Contaminants	Treatment Type	Technology Vendor	Technology	Volume, Page Number
Soil (continued)	VOCs (continued)	Physical/ Chemical Treatment (continued)	Terra Vac, Inc.	In Situ and Ex Situ Vacuum Extraction	V1,160
			Roy F. Weston, Inc./IEG Technologies	UVB - Vacuum Vaporizing Well	V1,176
			Xerox Corp.	2-PHASE™ EXTRACTION Process	V1,180
		Portable Gas Chromatographs	Bruker Analytical Systems, Inc.	Mobile Environmental Monitor	V3,20
			HNU Systems, Inc.	HNU GC 311D Portable Gas Chromatograph	V3,42
			Photovac Monitoring Instruments	PE Photovac Voyager Portable Gas Chromatograph	V3,56
			SRI Instruments	Compact Gas Chromatograph	V3,66
			U.S. EPA	Field Analytical Screening Program - PCB Method	V3,78
		Samplers	Clements, Inc.	JMC Envionmentalist's Subsoil Probe	V3,24
			Simulprobe Technologies, Inc.	Core Barrel Soil Sampler	V3,62
		Sensors	Geoprobe Systems	Geoprobe Conductivity System	V3,32
			Fugro Geosciences, Inc.	Rapid Optical Screening Tool	V3,30
		Solidification/ Stabilization	Geo-Con, Inc.	In Situ Solidification and Stabilization Process	V1,82
			WASTECH, Inc.	Solidification and Stabilization	V1,172
			Western Product Recovery Group, Inc.	Coordinate, Chemical Bonding, and Adsorption Treatment	V2,114
		Spectrometers	Graseby Ionics, Ltd., and PCP, Inc.	Ion Mobility Spectrometry	V3,36
		Test Kits	Hanby Environmental Laboratory Procedure, Inc.	Test Kits for Organic Contaminants in Soil and Water	V3,38
		Thermal Destruction	Energy and Environmental Research Corp.	Hybrid Fluidized Bed System	V2,40
			Institute of Gas Technology	Fluidized-Bed/Cyclonic Agglomerating Combustor	V2,60
			Sonotech, Inc.	Frequency-Tunable Pulse Combustion System	V1,154
			Svedala Industries, Inc.	PYROKILN THERMAL ENCAPSULATION Process	V2,100
			Texaco Inc.	Texaco Gasification Process	V1,162
			Vortec Corp.	Vitrification Process	V1,236
	Other	Cone Penetrometers	Tri-Services	Site Characterization Analysis Penetrometer System (SCAPS)	V3,76
		Solidification/ Stabilization	STC Remediation, A Division of Omega Environmental, inc.	Organic Stabilization and Chemical Fixation/Solidification	V1,156
Solids	Dioxins	Physical/ Chemical Treatment	Active Environmental, Inc.	TechXtract™ Process	V1,20
	Furans	Physical/ Chemical Treatment	Active Environmental, Inc.	TechXtract™ Process	V1,20

APPLICABILITY INDEX (continued)

Media	Contaminants	Treatment Type	Technology Vendor	Technology	Volume, Page Number
Solid (continued)	Metals	Physical/ Chemical Treatment	Active Environmental, Inc.	TechXtract™ Process	V1,20
	Mercury	Physical/ Chemical Treatment	Bionebraska, Inc.	BiMelyze® Mercury Immunoassay	V3,18
	PCBs	Physical/ Chemical Treatment	Active Environmental, Inc.	TechXtract™ Process	V1,20
	Pesticides	Physical/ Chemical Treatment	Active Environmental, Inc.	TechXtract™ Process	V1,20
Waste water	Aromatic VOCs	Biological Degradation	Biotrol®	Biological Aqueous Treatment System	V1,38
			Electrokinetics, Inc.	In Situ Bioremediation by Electrokinetic Injection	V2,120
			ZENON Environmental, Inc.	ZenoGem™ Process	V1,184
		Physical/ Chemical Thermal Desorption	Rochem Separation Systems, Inc.	Rochem Disc Tube™ Module System	V1,142
		Physical/ Chemical Treatment	CF Systems Corp.	Liquified Gas Solvent Extraction [LG-SX} Technology	V1,48
			High Voltage Environmental Applications, Inc.	High Energy Electron Beam Irradiation	V2,54
			High Voltage Environmental Applications, Inc.	High Energy Electron Irradiation	V1,94
			Magnum Water Technology	CAV-OX® Process	V1,108
			Matrix Photocatalytic Inc.	Photocatalytic Water Treatment	V1,110
			Pulse Sciences, Inc.	X-ray Treatment of Aqueous Solutions	V2,90
			SBP Technologies, Inc.	Membrane Filtration and Bioremediation	V1,144
			ZENON Environmental Inc.	Cross Flow Pervaporation System	V1,182
		Portable Gas Chromatographs	Analytical and Remedial Technology, Inc.	Automated Sampling and Analytical Platform	V3,14
			Bruker Analytical Systems, Inc.	Mobile Environmental Monitor	V3,20
			HNU Systems, Inc.	HNU GC 311D Portable Gas Chromatograph	V3,42
			Sentex Sensing Technology, Inc.	Scentograph Plus II Portable Gas Chromatograph	V3,60
			SRI Instruments	Compact Gas Chromatograph	V3,66
			U.S. EPA	Field Analytical Screening Program - PCB Method	V3,78
		Solidification/ Stabilization	Wheelabrator Clean Air Systems, Inc.	PO*WW*ER™ Technology	V1,178
		Spectrometers	Graseby Ionics, Ltd., and PCP, Inc.	Ion Mobility Spectrometry	V3,36

APPLICABILITY INDEX (continued)

Media	Contaminants	Treatment Type	Technology Vendor	Technology	Volume, Page Number
Wastewater (continued)	Aromatic VOCs (continued)	Test Kits	Hanby Environmental Laboratory Procedure, Inc.	Test Kits for Organic Contaminants in Soil and Water	V3,38
	Cyanide	Biological Degradation	Pintail Systems, Inc.	Spent Ore Bioremediation Process	V1,214
	Dioxins	Physical/ Chemical Thermal Desorption	ELI Eco Logic Inc.	Gas-Phase Chemical Reduction Process	V1,68
		Physical/ Chemical Treatment	CF Systems Corp.	Liquified Gas Solvent Extraction [LG-SX} Technology	V1,48
			High Voltage Environmental Applications, Inc.	High Energy Electron Irradiation	V1,94
			Matrix Photocatalytic Inc.	Photocatalytic Water Treatment	V1,110
			SBP Technologies, Inc.	Membrane Filtration and Bioremediation	V1,144
		Portable Gas Chromatographs	Bruker Analytical Systems, Inc.	Mobile Environmental Monitor	V3,20
		Solidification/ Stabilization	Wheelabrator Clean Air Systems, Inc.	PO*WW*ER™ Technology	V1,178
		Spectrometers	Graseby Ionics, Ltd., and PCP, Inc.	Ion Mobility Spectrometry	V3,36
		Thermal Destruction	BWX Technologies, Inc.	Cyclone Furnace	V1,44
	Explosives	Physical/ Chemical Thermal Desorption	New Jersey Institute of Technology	GHEA Associates Process	V2,86
		Physical/ Chemical Treatment	U.S. Filter/WTS Ultrox	Ultraviolet Radiation and Oxidation	V1,168
	Furans	Physical/ Chemical Thermal Desorption	ELI Eco Logic Inc.	Gas-Phase Chemical Reduction Process	V1,68
		Physical/ Chemical Treatment	CF Systems Corp.	Liquified Gas Solvent Extraction [LG-SX} Technology	V1,48
			High Voltage Environmental Applications, Inc.	High Energy Electron Irradiation	V1,94
			Matrix Photocatalytic Inc.	Photocatalytic Water Treatment	V1,110
			SBP Technologies, Inc.	Membrane Filtration and Bioremediation	V1,144
		Portable Gas Chromatographs	Bruker Analytical Systems, Inc.	Mobile Environmental Monitor	V3,20
		Solidification/ Stabilization	Wheelabrator Clean Air Systems, Inc.	PO*WW*ER™ Technology	V1,178
		Spectrometers	Graseby Ionics, Ltd., and PCP, Inc.	Ion Mobility Spectrometry	V3,36
		Thermal Destruction	BWX Technologies, Inc.	Cyclone Furnace	V1,44
	Halogenated VOCs	Biological Degradation	Biotrol®	Biological Aqueous Treatment System	V1,38
			ZENON Environmental, Inc.	ZenoGem™ Process	V1,184

APPLICABILITY INDEX (continued)

Media	Contaminants	Treatment Type	Technology Vendor	Technology	Volume, Page Number
Wastewater (continued)	Halogenated VOCs (continued)	Physical/ Chemical Thermal Desorption	New Jersey Institute of Technology	GHEA Associates Process	V2,86
		Physical/ Chemical Treatment	CF Systems Corp.	Liquified Gas Solvent Extraction [LG-SX} Technology	V1,48
			EnviroMetal Technologies, Inc.	In Situ and Ex Situ Metal Enhanced Abiotic Degradation of Dissolved Halogenated Organic Compounds in Groundwater	V1,72
			High Voltage Environmental Applications, Inc.	High Energy Electron Beam Irradiation	V2,54
			High Voltage Environmental Applications, Inc.	High Energy Electron Irradiation	V1,94
			Magnum Water Technology	CAV-OX® Process	V1,108
			Matrix Photocatalytic Inc.	Photocatalytic Water Treatment	V1,110
			Pulse Sciences, Inc.	X-ray Treatment of Aqueous Solutions	V2,90
			SBP Technologies, Inc.	Membrane Filtration and Bioremediation	V1,144
			U.S. Filter/WTS Ultrox	Ultraviolet Radiation and Oxidation	V1,168
			UV Technologies, Inc.	PhotoCAT™ Process	V2,112
			Roy F. Weston, Inc.	Ambersorb™ 563 Adsorbent	V2,116
			ZENON Environmental Inc.	Cross Flow Pervaporation System	V1,182
		Portable Gas Chromatographs	Analytical and Remedial Technology, Inc.	Automated Sampling and Analytical Platform	V3,14
			Bruker Analytical Systems, Inc.	Mobile Environmental Monitor	V3,20
			Sentex Sensing Technology, Inc.	Scentograph Plus II Portable Gas Chromatograph	V3,60
			SRI Instruments	Compact Gas Chromatograph	V3,66
			U.S. EPA	Field Analytical Screening Program - PCB Method	V3,78
		Solidification/ Stabilization	Wheelabrator Clean Air Systems, Inc.	PO*WW*ER™ Technology	V1,178
		Spectrometers	Graseby Ionics, Ltd., and PCP, Inc.	Ion Mobility Spectrometry	V3,36
		Thermal Destruction	Energy and Environmental Research Corp.	Hybrid Fluidized Bed System	V2,40
	Heavy Metals	Field Portable X-ray Fluorescence	HNU Systems, Inc.	HNU Source Excited Fluorescence Analyzer-Portable (SEFA-P) X-Ray Fluorescence Analyzer	V3,44
		Portable Gas Chromatographs	Bruker Analytical Systems, Inc.	Mobile Environmental Monitor	V3,20
	Herbicides	Biological Degradation	Biotrol®	Biological Aqueous Treatment System	V1,38

APPLICABILITY INDEX (continued)

Media	Contaminants	Treatment Type	Technology Vendor	Technology	Volume, Page Number
Wastewater (continued)	Herbicides (continued)	Biological Degradation (continued)	Electrokinetics, Inc.	In Situ Bioremediation by Electrokinetic Injection	V2,120
			ZENON Environmental, Inc.	ZenoGem™ Process	V1,184
		Physical/ Chemical Thermal Desorption	ELI Eco Logic Inc.	Gas-Phase Chemical Reduction Process	V1,68
		Physical/ Chemical Treatment	CF Systems Corp.	Liquified Gas Solvent Extraction [LG-SX} Technology	V1,48
			High Voltage Environmental Applications, Inc.	High Energy Electron Irradiation	V1,94
			Magnum Water Technology	CAV-OX® Process	V1,108
			Matrix Photocatalytic Inc.	Photocatalytic Water Treatment	V1,110
			SBP Technologies, Inc.	Membrane Filtration and Bioremediation	V1,144
		Portable Gas Chromatographs	Bruker Analytical Systems, Inc.	Mobile Environmental Monitor	V3,20
		Solidification/ Stabilization	Wheelabrator Clean Air Systems, Inc.	PO*WW*ER™ Technology	V1,178
		Spectrometers	Graseby Ionics, Ltd., and PCP, Inc.	Ion Mobility Spectrometry	V3,36
		Test Kits	Strategic Diagnostic, Inc. Corp.	RaPID Assay®	V3,72
		Thermal Destruction	BWX Technologies, Inc.	Cyclone Furnace	V1,44
	Inorganics	Field Portable X-ray Fluorescence	HNU Systems, Inc.	HNU Source Excited Fluorescence Analyzer-Portable (SEFA-P) X-Ray Fluorescence Analyzer	V3,44
	Metals	Biological Degradation	Colorado Dept. of Public Health and Environmental	Constructed Wetlands-Based Treatment	V1,54
			Pintail Systems, Inc.	Biomineralization of Metals	V2,130
			Pintail Systems, Inc.	Spent Ore Bioremediation Process	V1,214
		Field Portable X-ray Fluorescence	HNU Systems, Inc.	HNU Source Excited Fluorescence Analyzer-Portable (SEFA-P) X-Ray Fluorescence Analyzer	V3,44
			Metorex, Inc.	Field Portable X-ray Fluorescence Analysis	V3,48
		Physical/ Chemical Radioactive Waste Treatment	Filter Flow Technology, Inc.	Colloid Polishing Filter Method	V1,76
		Physical/ Chemical Thermal Desorption	New Jersey Institute of Technology	GHEA Associates Process	V2,86
			Rochem Separation Systems, Inc.	Rochem Disc Tube™ Module System	V1,142
		Physical/ Chemical Treatment	Atomic Energy of Canada, Limited	Chemical Treatment and Ultrafiltration	V2,22

APPLICABILITY INDEX (continued)

Media	Contaminants	Treatment Type	Technology Vendor	Technology	Volume, Page Number
Wastewater (continued)	Metals (continued)	Physical/ Chemical Treatment (continued)	Atomic Energy of Canada, Limited	Ultrasonic-Aided Leachate Treatment	V2,24
			E.I. DuPont de Nemours and Company, and Oberlin Filter Co.	Membrane Microfiltration	V1,60
			Dynaphore, Inc.	FORAGER® Sponge	V1,62
			EnviroMetal Technologies, Inc.	Reactive Barrier	V1,194
			EPOC Water, Inc.	Precipitation, Microfiltration, and Sludge Dewatering	V1,74
			Cure International, Inc.	CURE® Electrocoagulation Wastewater Treatment System	V1,58
			Lewis Environmental Services, Inc./Hickson Corp.	Chromated Copper Arsenic Soil Leaching Process	V2,76
			Matrix Photocatalytic Inc.	Photocatalytic Water Treatment	V1,110
			Morrison Knudsen Corporation/Spetstampon azhgeologia Enterprises/STG Technologies	Clay-Base Grouting Technology	V1,114
			RECRA Environmental, Inc.	Alternating Current Electrocoagulation Technology	V2,92
			Selentec Environmental, Inc.	Selentec MAG*SEP Technology	V1,226
			U. of Washington	Adsorptive Filtration	V2,110
		Portable Gas Chromatographs	HNU Systems, Inc.	HNU GC 311D Portable Gas Chromatograph	V3,42
		Solidification/ Stabilization	Wheelabrator Clean Air Systems, Inc.	PO*WW*ER™ Technology	V1,178
		Thermal Destruction	BWX Technologies, Inc.	Cyclone Furnace	V1,44
			Energy and Environmental Research Corp.	Hybrid Fluidized Bed System	V2,40
	PAHs	Physical/ Chemical Treatment	SBP Technologies, Inc.	Membrane Filtration and Bioremediation	V1,144
		Portable Gas Chromatographs	Bruker Analytical Systems, Inc.	Mobile Environmental Monitor	V3,20
			SRI Instruments	Compact Gas Chromatograph	V3,66
	PCBs	Biological Degradation	ZENON Environmental, Inc.	ZenoGem™ Process	V1,184
		Field Portable X-ray Fluorescence	Metorex, Inc.	Field Portable X-ray Fluorescence Analysis	V3,48
		Physical/ Chemical Thermal Desorption	ELI Eco Logic Inc.	Gas-Phase Chemical Reduction Process	V1,68
			New Jersey Institute of Technology	GHEA Associates Process	V2,86
		Physical/ Chemical Treatment	Calgon Carbon Oxidation Technologies	perox-pure™ Chemical Oxidation Technology	V1,46

APPLICABILITY INDEX (continued)

Media	Contaminants	Treatment Type	Technology Vendor	Technology	Volume, Page Number
Wastewater (continued)	PCBs (continued)	Physical/ Chemical Treatment (continued)	CF Systems Corp.	Liquified Gas Solvent Extraction [LG-SX} Technology	V1,48
			High Voltage Environmental Applications, Inc.	High Energy Electron Beam Irradiation	V2,54
			High Voltage Environmental Applications, Inc.	High Energy Electron Irradiation	V1,94
			Magnum Water Technology	CAV-OX® Process	V1,108
			Matrix Photocatalytic Inc.	Photocatalytic Water Treatment	V1,110
			Morrison Knudsen Corporation/Spetstamponazhgeologia Enterprises/STG Technologies	Clay-Base Grouting Technology	V1,114
			SBP Technologies, Inc.	Membrane Filtration and Bioremediation	V1,144
			U.S. Filter/WTS Ultrox	Ultraviolet Radiation and Oxidation	V1,168
		Portable Gas Chromatographs	Bruker Analytical Systems, Inc.	Mobile Environmental Monitor	V3,20
			HNU Systems, Inc.	HNU Source Excited Fluorescence Analyzer-Portable (SEFA-P) X-Ray Fluorescence Analyzer	V3,42
			Sentex Sensing Technology, Inc.	Scentograph Plus II Portable Gas Chromatograph	V3,60
			SRI Instruments	Compact Gas Chromatograph	V3,66
			U.S. EPA	Field Analytical Screening Program - PCB Method	V3,78
		Solidification/ Stabilization	Wheelabrator Clean Air Systems, Inc.	PO*WW*ER™ Technology	V1,178
		Spectrometers	Graseby Ionics, Ltd., and PCP, Inc.	Ion Mobility Spectrometry	V3,36
		Test Kits	Strategic Diagnostic, Inc.	Ensys Penta Test System	V3,68
			Hanby Environmental Laboratory Procedure, Inc.	Test Kits for Organic Contaminants in Soil and Water	V3,38
		Thermal Destruction	BWX Technologies, Inc.	Cyclone Furnace	V1,44
			Energy and Environmental Research Corp.	Hybrid Fluidized Bed System	V2,40
	PCP	Physical/ Chemical Treatment	SBP Technologies, Inc.	Membrane Filtration and Bioremediation	V1,144
			U.S. Filter/WTS Ultrox	Ultraviolet Radiation and Oxidation	V1,168
		Test Kits	Strategic Diagnostic, Inc.	Ensys Penta Test System	V3,68
			Strategic Diagnostic, Inc.	EnviroGard™ PCP Immunoassay Test Kit	V3,70

APPLICABILITY INDEX (continued)

Media	Contaminants	Treatment Type	Technology Vendor	Technology	Volume, Page Number
Wastewater (continued)	PCP (continued)	Test Kits (continued)	Strategic Diagnostic, Inc. Corp.	RaPID Assay®	V3,72
	Pesticides	Biological Degradation	Biotrol®	Biological Aqueous Treatment System	V1,38
			Electrokinetics, Inc.	In Situ Bioremediation by Electrokinetic Injection	V2,120
			ZENON Environmental, Inc.	ZenoGem™ Process	V1,184
		Physical/ Chemical Thermal Desorption	ELI Eco Logic Inc.	Gas-Phase Chemical Reduction Process	V1,68
		Physical/ Chemical Treatment	Calgon Carbon Oxidation Technologies	perox-pure™ Chemical Oxidation Technology	V1,46
			CF Systems Corp.	Liquified Gas Solvent Extraction [LG-SX} Technology	V1,48
			High Voltage Environmental Applications, Inc.	High Energy Electron Beam Irradiation	V2,54
			High Voltage Environmental Applications, Inc.	High Energy Electron Irradiation	V1,94
			Magnum Water Technology	CAV-OX® Process	V1,108
			Matrix Photocatalytic Inc.	Photocatalytic Water Treatment	V1,110
			Morrison Knudsen Corporation/Spetstampon azhgeologia Enterprises/STG Technologies	Clay-Base Grouting Technology	V1,114
			SBP Technologies, Inc.	Membrane Filtration and Bioremediation	V1,144
			U.S. Filter/WTS Ultrox	Ultraviolet Radiation and Oxidation	V1,168
		Portable Gas Chromatographs	Bruker Analytical Systems, Inc.	Mobile Environmental Monitor	V3,20
			Sentex Sensing Technology, Inc.	Scentograph Plus II Portable Gas Chromatograph	V3,60
			SRI Instruments	Compact Gas Chromatograph	V3,66
			U.S. EPA	Field Analytical Screening Program - PCB Method	V3,78
		Solidification/ Stabilization	Wheelabrator Clean Air Systems, Inc.	PO*WW*ER™ Technology	V1,178
		Spectrometers	Graseby Ionics, Ltd., and PCP, Inc.	Ion Mobility Spectrometry	V3,36
		Test Kits	Strategic Diagnostic, Inc.	Ensys Penta Test System	V3,68
			Hanby Environmental Laboratory Procedure, Inc.	Test Kits for Organic Contaminants in Soil and Water	V3,38
			Strategic Diagnostic, Inc. Corp.	RaPID Assay®	V3,72

APPLICABILITY INDEX (continued)

Media	Contaminants	Treatment Type	Technology Vendor	Technology	Volume, Page Number
Wastewater (continued)	Pesticides (continued)	Thermal Destruction	BWX Technologies, Inc.	Cyclone Furnace	V1,44
			Energy and Environmental Research Corp.	Hybrid Fluidized Bed System	V2,40
	Petroleum Hydrocarbons	Physical/ Chemical Thermal Desorption	New Jersey Institute of Technology	GHEA Associates Process	V2,86
		Physical/ Chemical Treatment	Calgon Carbon Oxidation Technologies	perox-pure™ Chemical Oxidation Technology	V1,46
			SBP Technologies, Inc.	Membrane Filtration and Bioremediation	V1,144
		Portable Gas Chromatographs	SRI Instruments	Compact Gas Chromatograph	V3,66
		Test Kits	Idetek, Inc.	Equate® Immunoassay	V3,46
	Radionuclides	Physical/ Chemical Radioactive Waste Treatments	Filter Flow Technology, Inc.	Colloid Polishing Filter Method	V1,76
		Physical/ Chemical Treatment	Atomic Energy of Canada, Limited	Chemical Treatment and Ultrafiltration	V2,22
			Atomic Energy of Canada, Limited	Ultrasonic-Aided Leachate Treatment	V2,24
			Selentec Environmental, Inc.	Selentec MAG*SEP Technology	V1,226
		Thermal Destruction	BWX Technologies, Inc.	Cyclone Furnace	V1,44
	SVOCs	Biological Degradation	Biotrol®	Biological Aqueous Treatment System	V1,38
			ZENON Environmental, Inc.	ZenoGem™ Process	V1,184
		Physical/ Chemical Thermal Desorption	ELI Eco Logic Inc.	Gas-Phase Chemical Reduction Process	V1,68
			New Jersey Institute of Technology	GHEA Associates Process	V2,86
		Physical/ Chemical Treatment	Calgon Carbon Oxidation Technologies	perox-pure™ Chemical Oxidation Technology	V1,46
			CF Systems Corp.	Liquified Gas Solvent Extraction [LG-SX} Technology	V1,48
			High Voltage Environmental Applications, Inc.	High Energy Electron Beam Irradiation	V2,54
			High Voltage Environmental Applications, Inc.	High Energy Electron Irradiation	V1,94
			Pulse Sciences, Inc.	X-ray Treatment of Aqueous Solutions	V2,90
			SBP Technologies, Inc.	Membrane Filtration and Bioremediation	V1,144
		Portable Gas Chromatographs	Analytical and Remedial Technology, Inc.	Automated Sampling and Analytical Platform	V3,14
			Bruker Analytical Systems, Inc.	Mobile Environmental Monitor	V3,20

APPLICABILITY INDEX (continued)

Media	Contaminants	Treatment Type	Technology Vendor	Technology	Volume, Page Number
Wastewater (continued)	SVOCs (continued)	Portable Gas Chromatographs (continued)	U.S. EPA	Field Analytical Screening Program - PCB Method	V3,78
		Solidification/ Stabilization	Wheelabrator Clean Air Systems, Inc.	PO*WW*ER™ Technology	V1,178
		Test Kits	Strategic Diagnostic, Inc. Corp.	RaPID Assay®	V3,72
		Thermal Destruction	BWX Technologies, Inc.	Cyclone Furnace	V1,44
	VOCs	Biological Degradation	Biotrol®	Biological Aqueous Treatment System	V1,38
			Electrokinetics, Inc.	In Situ Bioremediation by Electrokinetic Injection	V2,120
			ZENON Environmental, Inc.	ZenoGem™ Process	V1,184
		Physical/ Chemical Thermal Desorption	New Jersey Institute of Technology	GHEA Associates Process	V2,86
			Rochem Separation Systems, Inc.	Rochem Disc Tube™ Module System	V1,142
		Physical/ Chemical Treatment	Calgon Carbon Oxidation Technologies	perox-pure™ Chemical Oxidation Technology	V1,46
			CF Systems Corp.	Liquified Gas Solvent Extraction [LG-SX} Technology	V1,48
			EnviroMetal Technologies, Inc.	In Situ and Ex Situ Metal Enhanced Abiotic Degradation of Dissolved Halogenated Organic Compounds in Groundwater	V1,72
			EnviroMetal Technologies, Inc.	Reactive Barrier	V1,194
			High Voltage Environmental Applications, Inc.	High Energy Electron Irradiation	V1,94
			Pulse Sciences, Inc.	X-ray Treatment of Aqueous Solutions	V2,90
			SBP Technologies, Inc.	Membrane Filtration and Bioremediation	V1,144
			U.S. Filter/WTS Ultrox	Ultraviolet Radiation and Oxidation	V1,168
			UV Technologies, Inc.	PhotoCAT™ Process	V2,112
			Roy F. Weston, Inc.	Ambersorb™ 563 Adsorbent	V2,116
			ZENON Environmental Inc.	Cross Flow Pervaporation System	V1,182
		Portable Gas Chromatograph	Bruker Analytical Systems, Inc.	Mobile Environmental Monitor	V3,20
			HNU Systems, Inc.	HNU Source Excited Fluorescence Analyzer-Portable (SEFA-P) X-Ray Fluorescence Analyzer	V3,42
			Sentex Sensing Technology, Inc.	Scentograph Plus II Portable Gas Chromatograph	V3,60
			SRI Instruments	Compact Gas Chromatograph	V3,66

APPLICABILITY INDEX (continued)

Media	Contaminants	Treatment Type	Technology Vendor	Technology	Volume, Page Number
Wastewater (continued)	VOCs (continued)	Portable Gas Chromatograph (continued)	U.S. EPA	Field Analytical Screening Program - PCB Method	V3,78
		Solidification/ Stabilization	Wheelabrator Clean Air Systems, Inc.	PO*WW*ER™ Technology	V1,178
		Spectrometers	Graseby Ionics, Ltd., and PCP, Inc.	Ion Mobility Spectrometry	V3,36
		Test Kits	Hanby Environmental Laboratory Procedure, Inc.	Test Kits for Organic Contaminants in Soil and Water	V3,38
		Thermal Destruction	Energy and Environmental Research Corp.	Hybrid Fluidized Bed System	V2,40
	Other	Physical/ Chemical Treatment	North American Technologies Group, Inc.	Oleophilic Amine-Coated Ceramic Chip	V1,132
			RECRA Environmental, Inc.	Alternating Current Electrocoagulation Technology	V2,92
Other	Aromatic VOCs	Solidification/ Stabilization	Western Product Recovery Group, Inc.	Coordinate, Chemical Bonding, and Adsorption Treatment	V2,114
	Dioxins	Physical/ Chemical Treatment	Terra-Kleen Response Group, Inc.	Solvent Extraction Treatment System	V1,158
		Solidification/ Stabilization	Geosafe Corp.	GeoMelt Vitrification	V1,84
	Furans	Physical/ Chemical Treatment	Terra-Kleen Response Group, Inc.	Solvent Extraction Treatment System	V1,158
		Solidification/ Stabilization	Geosafe Corp.	GeoMelt Vitrification	V1,84
	Halogenated VOCs	Physical/ Chemical Treatment	Process Technologies, Inc.	Photolytic Destruction of Vapor-Phase Halogens	V1,218
		Solidification/ Stabilization	Geosafe Corp.	GeoMelt Vitrification	V1,84
	Metals	Field Portable X-ray Fluorescence	NITON Corp.	XL Spectrum Analyzer	V3,52
			TN Spectrace	9000 X-ray Fluorescence Analyzer and Lead X-ray Fluorescence Analyzer	V3,74
		Materials Handling	AEA Technology Environment	Soil Separation and Washing Process	V2,16
		Solidification/ Stabilization	Geosafe Corp.	GeoMelt Vitrification	V1,84
			Western Product Recovery Group, Inc.	Coordinate, Chemical Bonding, and Adsorption Treatment	V2,114
		Thermal Destruction	Concurrent Technologies	Smelting Lead-Containing Wastes	V2,34
	PCBs	Physical/ Chemical Treatment	Terra-Kleen Response Group, Inc.	Solvent Extraction Treatment System	V1,158
		Solidification/ Stabilization	Geosafe Corp.	GeoMelt Vitrification	V1,84
	Pesticides	Physical/ Chemical Treatment	Terra-Kleen Response Group, Inc.	Solvent Extraction Treatment System	V1,158
		Solidification/ Stabilization	Geosafe Corp.	GeoMelt Vitrification	V1,84

APPLICABILITY INDEX (continued)

Media	Contaminants	Treatment Type	Technology Vendor	Technology	Volume, Page Number
Other (continued)	SVOCs	Physical/ Chemical Thermal Desorption	Process Technologies, Inc.	Photolytic Destruction of Vapor-Phase Halogens	V1,218
		Physical/ Chemical Treatment	Terra-Kleen Response Group, Inc.	Solvent Extraction Treatment System	V1,158
		Solidification/ Stabilization	Western Product Recovery Group, Inc.	Coordinate, Chemical Bonding, and Adsorption Treatment	V2,114
	VOCs	Materials Handling	AEA Technology Environment	Soil Separation and Washing Process	V2,16
		Physical/ Chemical Thermal Desorption	Process Technologies, Inc.	Photolytic Destruction of Vapor-Phase Halogens	V1,218
		Physical/ Chemical Treatment	Terra-Kleen Response Group, Inc.	Solvent Extraction Treatment System	V1,158
		Solidification/ Stabilization	Western Product Recovery Group, Inc.	Coordinate, Chemical Bonding, and Adsorption Treatment	V2,114
	Not Applicable	Data Management Systems	GIS\Solutions, Inc.	GIS\Key™ Environmental Data Management System	V1,88

☆ U. S. GOVERNMENT PRINTING OFFICE: 1999-460-902/15033

United States
Environmental Protection Agency
Center for Environmental Research Information
Cincinnati, OH 45268

Please make all necessary changes on the below label, detach or copy, and return to the address in the upper left-hand corner.

If you do not wish to receive these reports CHECK HERE ☐; detach, or copy this cover, and return to the address in the upper left-hand corner.

Official Business
Penalty for Private Use
$300

EPA/540/R-99/500b