Development Document for Effluent Limitations Guidelines and New Source Performance Standards for the

INSULATION FIBERGLASS

Manufacturing Segment of the Glass Manufacturing Point Source Category

JANUARY 1974

U.S. ENVIRONMENTAL PROTECTION AGENCY
Washington, D.C. 20460

WC-II

DEVELOPMENT DOCUMENT

for

EFFLUENT LIMITATIONS GUIDELINES

and

NEW SOURCE PERFORMANCE STANDARDS

for the

INSULATION FIBERGLASS MANUFACTURING SEGMENT OF THE GLASS MANUFACTURING POINT SOURCE CATEGORY

Russell E. Train
Administrator

Roger Strelow
Acting Assistant Administrator for Air & Water Programs

Allen Cywin
Director, Effluent Guidelines Division

Michael W. Kosakowski
Project Officer

January 1974

Effluent Guidelines Division
Office of Air and Water Programs
U.S. Environmental Protection Agency
Washington, D. C. 20460

For sale by the Superintendent of Documents, U.S. Government Printing Office, Washington, D.C. 20402 - Price $1.50

ABSTRACT

This document presents the findings of an extensive in-house study of the insulation fiberglass manufacturing segment of the glass manufacturing category of point sources by the Environmental Protection Agency for the purpose of developing effluent limitations guidelines and Federal standards of performance for the industry to implement Sections 304, 306 and 307 of the Federal Water Pollution Control Act, as amended (33 U.S.C. 1251, 1314 and 1316, 86 Stat. 816 et.seq.) (the "Act").

Effluent limitations guidelines contained herein set forth the degree of effluent reduction attainable through the application of the best practicable control technology currently available and the degree of effluent reduction attainable through the application of the best available technology economically achievable which must be achieved by existing point sources by July 1, 1977, and July 1, 1983, respectively. The standards of performance for new sources contained herein set forth the degree of effluent reduction which is achievable through the application of the best available demonstrated control technology, processes, operating methods, or other alternatives. The proposed regulations for all three levels of technology set forth above establish the requirement of no discharge of process waste water pollutants to navigable waters. Exception is granted in the 1977 standard for discharges resulting from advanced air emission control devices.

Supportive data and rationale for development of the proposed effluent limitations guidelines and standards of performance are contained in this report.

CONTENTS

Section		Page
I	Conclusions	1
II	Recommendations	3
III	Introduction	5
IV	Industry Categorization	25
V	Waste Characterization	29
VI	Selection of Pollutant Parameters	47
VII	Control and Treatment Technology	43
VIII	Cost, Energy and Nonwater Quality Aspect	71
IX	Effluent Reduction Attainable Through the Application of the Best Practicable Control Technology Currently Available -- Effluent Limitations Guidelines	83
X	Effluent Reduction Attainable Through the Application of the Best Available Technology Economically Achievable -- Effluent Limitations Guidelines	89
XI	New Source Performance Standards and Pretreatment Standards	91
XII	Acknowledgments	93
XIII	Bibliography	95
XIV	Glossary	97

FIGURES

		Page
I	Flame Attenuation Process	8
II	Rotary Spinning Process	9
III	How Insulation Fiberglass Is Made	10
IV	Wire Mesh Chain Cleaning	19
V	Size Distribution of Insulation Fiberglass Plants	24
VI	General Water Flow Diagram for an Insulation Fiberglass Plant	30
VII	Biological Treatment at Plant A	48
VIII	Water Flow Diagram of Plant A	53
IX	Schematic Diagram of Plant B	56
X	Water Flow Diagram of Plant B	57
XI	Water Flow Diagram of Plant D	59
XII	Water Flow Diagram of Plant E	62
XIII	Chain Cleaning at Plant E	63
XIV	Water Flow Diagram of Plant F	65
XV	Flow Chart for Plant G	67
XVI	Investment Cost of Total Recycle Per Unit Production	77
XVII	Annual Operating Costs of Total Recycle Per Unit Production	78
XVIII	Energy Consumption of Total Recycle	82

TABLES

		Page
I	Properties Related to Applications of Glass Fibers	12
II	Chemical Compositions of Glasses Used To Form Commercial Fibrous Glass	13
III	Primary Fibrous Glass Wool Products	15
IV	Fibrous Glass Mats-Basic Forms	16
V	Fibrous Glass Packs-Basic Forms	17
VI	U.S. Shipments and Value of Wool Glass Fiber 1964-1971	21
VII	Insulation Fiberglass Plants	23
VIII	Constituents of Insulation Fiberglass Plant Waste Streams	31
IX	Chain Wash Water Usage	32
X	Raw Waste Loads for Insulation Fiberglass Plants	33
XI	Annual Raw Waste Loads	34
XII	Sieve Analysis on Waste Cullet Water	36
XIII	Biological Treatment System at Plant A	49
XIV	Water Pollution Abatement Status of Existing Primary Insulation Fiberglass Plants	51
XV	A Comparison between the Alternate Treatment and Control Technologies	72
XVI	Water Pollution Abatement Costs for Total Recycle	73
XVII	Estimated Cost of Waste Water Treatment for Insulation Fiberglass Manufacture	75
XVIII	Summary of Capital and Operating Cost Effects: Wool Glass Fiber	76
XIX	Effects on Returns on Investment: Wool Glass Fiber	79
XX	Metric Units Conversion Table	102

SECTION I

CONCLUSIONS

For the purpose of establishing effluent limitations guidelines and standards of performance, the insulation fiberglass manufacturing segment of the glass manufacturing category of point sources serves as a single logical subcategory. Factors such as age, size of plant, process employed, waste water constituents and waste control technologies do not justify further segmentation of the industry.

Presently 7 of the 19 operating plants are employing or installing total recirculation systems. It is concluded that the remainder of the industry can achieve the requirement as set forth herein by July 1, 1977. The aggregate capital needed for achieving those limitations and standards by all plants within the industry is estimated to be about $10 million assuming that there are presently no treatment facilities. These costs could increase the capital investment in the industry 1.2 to 3.8 percent. As a result, the increased costs of insulation fiberglass to compensate for pollution control requirements could range from 0.6 to 3.8 percent under present conditions. Achieving those limitations and standards will result in complete elimination of all harmful substances in the waste waters.

SECTION II

RECOMMENDATIONS

No discharge of process waste water pollutants into navigable waters is recommended as the effluent limitations guidelines and standards of performance for the insulation fiberglass manufacturing segment of the glass manufacturing category of point sources. This represents the degree of effluent reduction obtainable by existing point sources through the application of the best practicable control technology currently available and the best available technology economically achievable. This also represents, for new sources, a standard of performance providing for the control of the discharge of pollutants which reflects the greatest degree of effluent reduction achievable through application of the best available demonstrated control technology, processes, operating methods, or other alternatives.

Because the addition of advanced air emission control systems may increase the hydraulic and raw waste load to the point where these waste waters cannot be evaporated on the product without process changes, excess water used for these purposes must meet the following requirements as best practicable control technology currently available:

Pollutant characteristic	Maximum for any one day kg/kkg (lb/1000 lb) of product	Maximum average of daily values for any period of 30 consecutive days kg/kkg (lb/1000 lb) of product
Phenols	0.0006	0.0003
COD	0.33	0.165
BOD_5	0.024	0.012
TSS	0.03	0.015
pH	within the range 6.0 to 9.0	

SECTION III

INTRODUCTION

Purpose and Authority

Section 301(b) of the Act requires the achievement by not later than July 1, 1977, of effluent limitations for point sources, other than publicly owned treatment works, which are based on the application of the best practicable control technology currently available as defined by the Administrator pursuant to Section 304(b) of the Act. Section 301 (b) also requires the achievement by not later than July 1, 1983, of effluent limitations for point sources, other than publicly owned treatment works, which are based on the application of the best available technology economically achievable which will result in reasonable further progress toward the national goal of eliminating the discharge of all pollutants, as determined in accordance with regulations issued by the Administrator pursuant to Section 304(b) of the Act. Section 306 of the Act requires the achievement by new sources of a Federal standard of performance providing for the control of the discharge of pollutants which reflects the greatest degree of effluent reduction which the Administrator determines to be achievable through the application of the best available demonstrated control technology, processes, operating methods, or other alternatives, including where practicable a standard permitting no discharge of pollutants.

Section 304(b) of the Act requires the Administrator to publish within one year of enactment of the Act regulations providing guidelines for effluent limitations setting forth the degree of effluent reduction attainable through the application of the best practicable control technology currently available and the degree of effluent reduction attainable through the application of the best control measures and practices achievable including treatment techniques, process and procedure innovations, operation methods and other alternatives. The regulations proposed herein set forth effluent limitations guidelines pursuant to Section 304(b) of the Act for the insulation fiberglass subcategory of the glass manufacturing category of point sources.

Section 306 of the Act requires the Administrator, within one year after a category of sources is included in a list published pursuant to Section 306(b) (1) (A) of the Act, to propose regulations establishing Federal standards of performances for new sources within those categories. The Administrator published in the Federal Register of January 16, 1973 (38 F.R. 1624), a list of 27 source categories. Publication of the list constituted announcement of the Administrator's intention of establishing, under Section 306, standards of performance applicable to new sources within the insulation fiberglass manufacturing subcategory of the glass manufacturing category of point sources, which was included in the list published January 16, 1973.

Summary of Methods Used for Development of the Effluent Limitations Guidelines and Standards of Performance

The effluent limitations guidelines and standards of performance proposed herein were developed in the following manner. The point source category was first studied for the purpose of determining whether separate limitations and standards are appropriate for different segments within the category. This analysis included a determination of whether differences in raw material used, product produced, manufacturing process employed, age, size, waste water constituents and other factors require development of separate limitations and standards for different segments of the point source category. The raw waste characteristics for each such segment were then identified. This included an analysis of (1) the source, flow and volume of water used in the process employed and the sources of waste and waste waters in the plant and (2) the constituents (including thermal) of all waste waters, including toxic constituents and other constituents which result in taste, odor, and color in the water or aquatic organisms. The constituents of the waste waters which should be subject to effluent limitations guidelines and standards of performance were identified.

The full range of control and treatment technologies existing within each segment was identified. This included an identification of each distinct control and treatment technology, including both in-plant and end-of-process technologies, which is existent or capable of being designed for each segment. It also included an identification of, in terms of the amount of constituents (including thermal) and the chemical, physical, and biological characteristics of pollutants, the effluent level resulting from the application of each of the treatment and control technologies. The problems, limitations and reliability of each treatment and control technology and the required implementation time were also identified. In addition, the non-water quality environmental impact, such as the effects of the application of the technologies upon other pollution problems, including air, solid waste, noise and radiation, was also identified. The energy requirements of each control and treatment technology were identified as well as the cost of the application of such technologies.

The information outlined above was then evaluated in order to determine what levels of technology constituted the "best practicable control technology currently available," the "best available technology economically achievable" and the "best available demonstrated control technology, processes, operating methods, or other alternatives." In identifying such technologies various factors were considered. These included the total cost of application of technology in relation to the effluent reduction benefits to be achieved from the application, the age of equipment and facilities involved, the process employed, the engineering aspects of the application of various types of control techniques process changes, non-water quality environmental impact (including energy requirements) and other factors.

The data on which the above analysis was performed were derived from EPA permit applications, EPA sampling and inspections, consultant reports and industry submissions. Seven plants were inspected by the project

officer. Three more were previously inspected by the EPA. All plants were discussed with the industry.

General Description of the Industry

The industry covered by this document is the insulation fiberglass manufacturing segment of the glass manufacturing source category. It encompasses a part of Standard Industrial Classification 3296 in which molten glass is either directly or indirectly made, continuously fiberized and chemically bonded into a wool-like insulating material. The scope of this subcategory also includes those products, generally referred to as insulation fiberglass by the industry, that are produced by the same equipment and by the same techniques as thermal insulation. These include, but are not limited to, noise insulation products, air filters, and bulk wool products. This category will be referred to as a primary process in contrast to a secondary operation in which waste textile fiberglass is processed into an insulation product. Such secondary operations are excluded because of their textile origin and the difference in processing techniques. These secondary operations usually do not use process water. Insulation fiberglass research and development laboratories are also excluded in this report because the range of such research includes textiles and a great diversity of experimentation not necessarily related to insulation products. The term insulation fiberglass is synonymous with the terms glass wool, fibrous glass, and construction fiberglass.

The modern fiberglass industry was born in 1935 when the Owens Illinois Glass Company and the Corning Glass Works combined their research organizations, later forming Owens-Corning Fiberglas in 1938. The original method of producing glass fibers is to allow molten glass to fall through platinum bushings, forming continuous, relatively thick threads of soft glass. The glass streams are then attenuated (drawn) into thin fibers by high velocity gas burners or steam. This process, generally referred to as flame attenuation, is pictured in Figure I.

In the 1950's, Owens-Corning Fiberglas and the Cie de St. Gobain perfected the centrifugal or rotary process. A single stream of molten glass is fed into a rotating platinum basket which distributes the glass on an outer rotating cylindrical spinner. The spinner contains a large number of small holes arranged in rows in the wall. The molten glass is forced through the holes forming fibers which are then attenuated 90° from their forming direction by high velocity gas burners, air, or steam, as depicted in Figure II. The output of a single spinner may range from 0.23 to 0.45 metric tons per hour (500-1000 lb/hr) and up to 5 or 6 spinners are used to feed fiber to one line.

Figure III depicts the basic insulation fiberglass processes. The flame attenuation and rotary spinning processes have their own individual merits. The flame attenuated product has greater longitudinal strength because the fibers are attenuated in the same direction (away from the gas or steam blower) and the lengths consequently align in one direction to give added tensile strength in that direction. This property results in decreased damage to the product upon installation. Rotary spun fibers, on the other hand, are attenuated as they form on the circumference of a rotating disk. The fiber lengths thus assume random

FIGURE I

FLAME ATTENUATION PROCESS

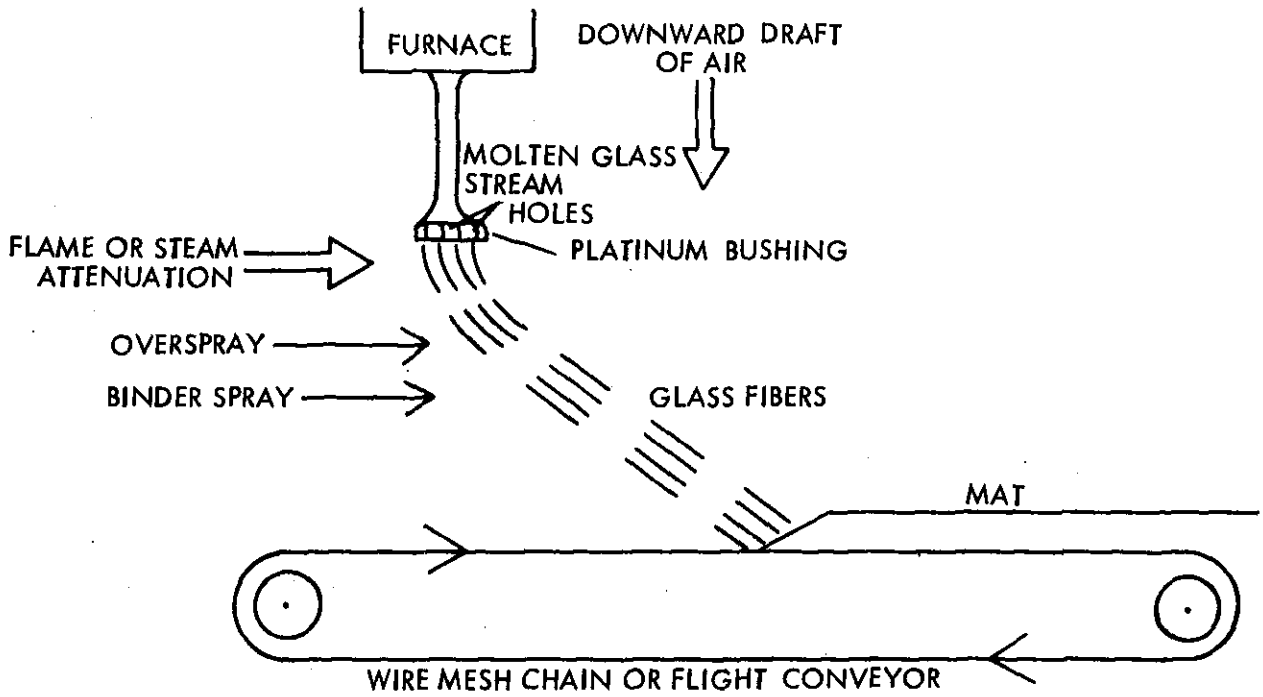

FIGURE II

ROTARY SPINNING PROCESS

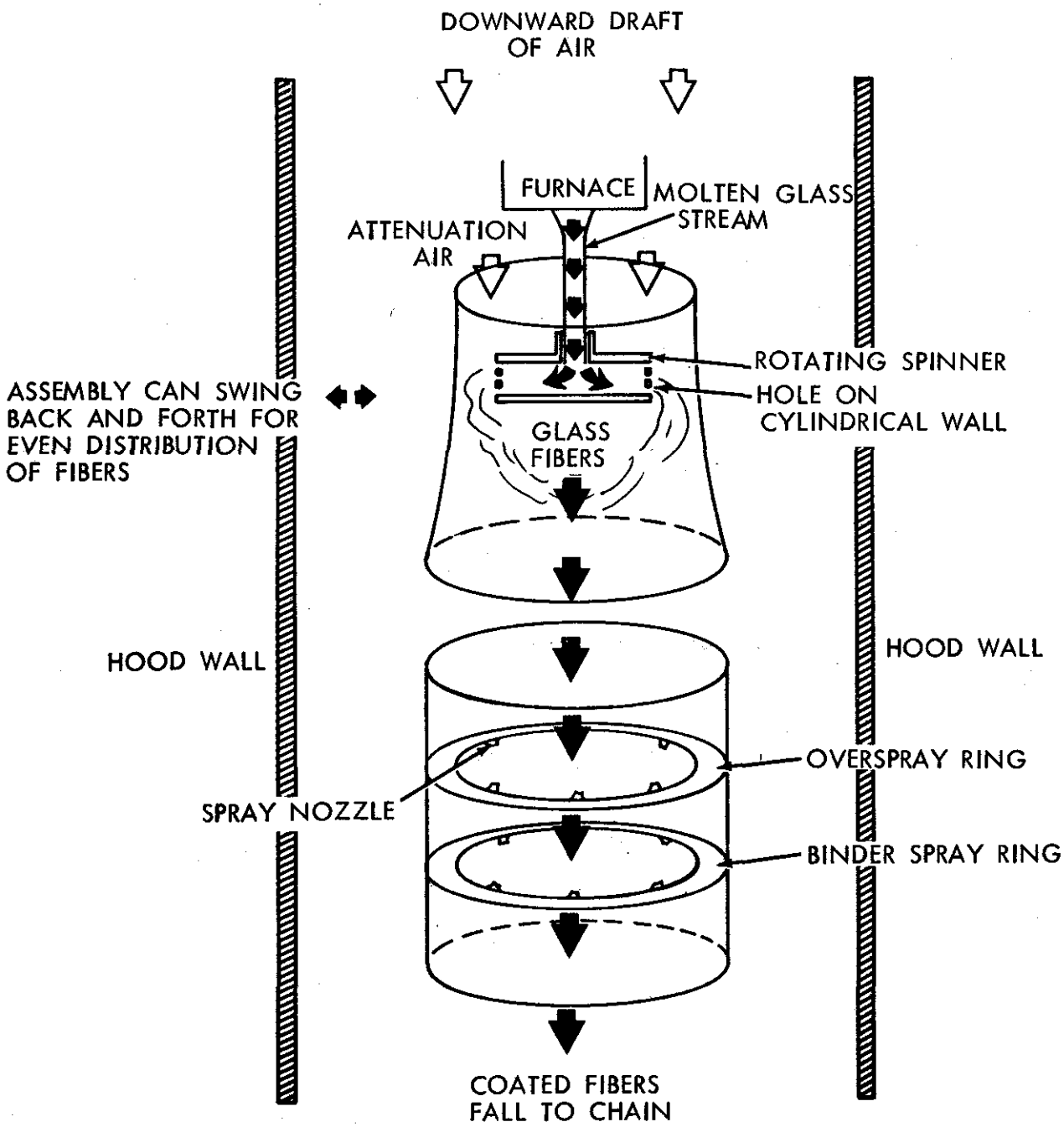

FIGURE III

HOW INSULATION FIBERGLASS IS MADE

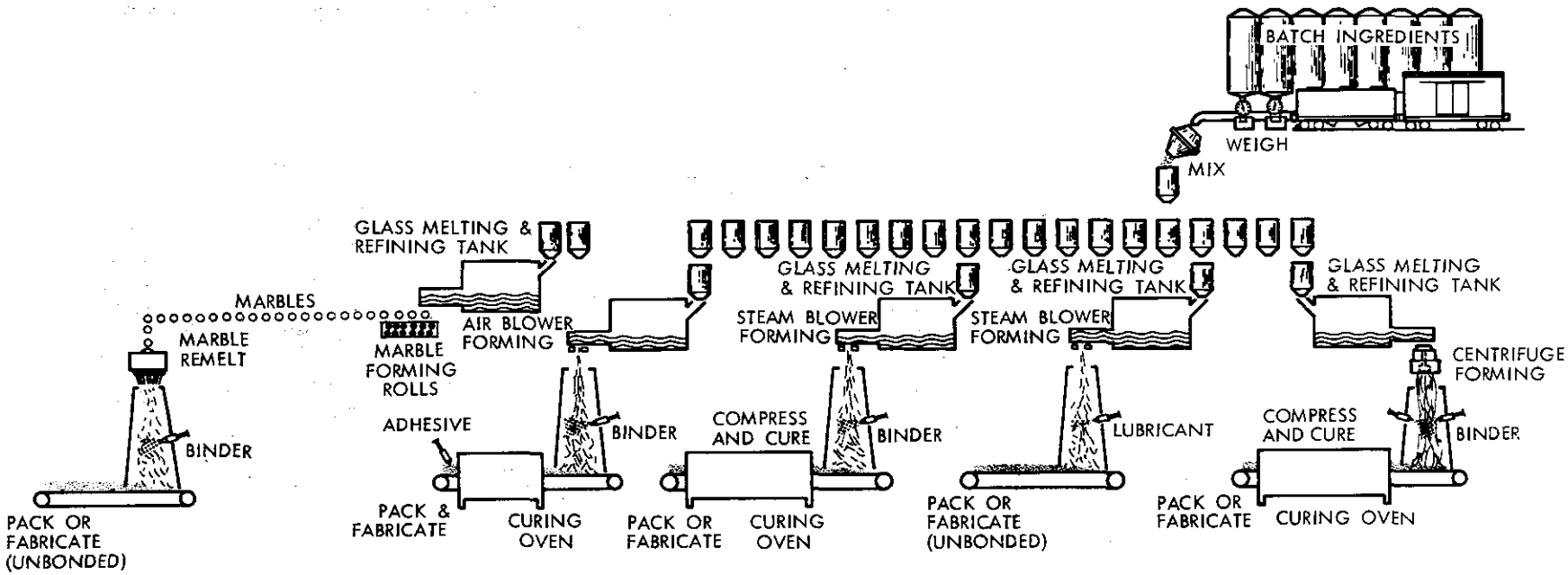

directions as they fall. Standard building insulation produced by the flame attenuated process generally uses less fiber (approximately 35% to 50%) to achieve the same thermal properties as rotary spun standard insulation. Since insulation is priced in accordance with its thermal properties, annual production ratings and plant capacities measured in kilograms can be somewhat misrepresentative when comparing the economics of the two processes. All small plants utilize the flame attentuation process and are financially better off than an economic impact based on overall industry plant capacity would indicate. Rotary forming processes can produce more uniform and finer fibers. They are also capable of producing huge tonnages of wool, and for these reasons the rotary process now dominates the industry.

Borosilicate glasses and low alkali silicate glasses are generally used in making glass fibers because of their chemical durability. The surface area to weight ratio of the glass fibers in glass wool products is so great that even atmospheric moisture could seriously weather common silicate glass fibers. Table I is a compilation of the uses for the various types of insulation fiberglass and Table II lists the glass composition. These tables serve as examples of insulation fiberglass products. Technological changes brought on by consumer demands have already made some of these products obsolete. The low thermal conductivity property of insulation fiberglass is not directly attributable to the glass, but rather to the ability of the glass fibers to establish stationary pockets of air. The fiberglass web in which these pockets are held minimizes heat transfer by air convection currents and limits it to conduction in air, which is a much slower rate.

There are two methods of producing the molten glass (1260-1316°C) that feeds the fiberizing machine in the forming area. The older method involves first producing 2.5 cm. (one inch) glass marbles and then feeding the marbles to a small remelt furnace which in turn feeds the fiberizer with molten glass. There can be several remelt pots to each production line. The marbles may either be produced at the plant site or made at a centrally located plant with a large furnace and shipped to other plants. The original purpose of this seemingly redundant procedure is to insure glass uniformity before the fibers are made by visually inspecting the glass marbles. The mechanical problems caused by seeds and bubbles are more troublesome in fibers than massive glass because of the small glass diameters involved. The assurance of better quality control in the glass-making stage, however, has led to the replacement of the intermediate glass marble process by direct feed furnaces. Currently only one company operates marble-feed processes for insulation products. This company finds it less costly to ship marbles than to build and maintain glass making furnaces at every small plant.

Rotary processes are always fed by direct melt furnaces because rotary spinners have high volume production capabilities which can only be matched by direct melt furnaces. Furthermore, the high cost of a glass furnace usually necessitates that it be large, which in turn requires a large plant capacity in order for the operation to be profitable. Both marble feed and direct melt processes feed flame attenuation forming processes.

TABLE I

PROPERTIES RELATED TO APPLICATIONS OF GLASS FIBERS

Glass Type	Fibrous-glass Forms	Fiber Diameter Range, mm	Fiber Diameter Range, in.	Dominant Characteristics	Principal Uses
1. Low-alkali lime-alumina borosilicate	Textiles and mats	0.00585 - 0.00965	0.0023 - 0.00038	Excellent dielectric and weathering properties	Electrical textiles. General textiles. Reinforcement for plastics, rubber, gyspum, papers. General-purpose mats
2. Soda-lime borosilicate	Mats	0.0101 - 0.0152	0.00040 - 0.00060	Acid resistance	Mats for storage - battery retainers, for corrosion protection, water proofing, etc. Chemical (acid) filter cloths, anode bags
	Textiles	0.00585 - 0.00965	0.00023 - 0.00038		
3. Soda-lime borosilicate	Wool (coarse)	0.00760 - 0.0152	0.00030 - 0.00060	Good weathering	Thermal insulations. Acoustical products
4. Soda-lime	Packs (coarse fibers)	0.114 - 0.254	0.0045 - 0.010	Low cost	Coarse fibers only, for air and liquid filters, tower packing, airwasher contact and eliminator packs
5. Lime-free soda borosilicate	Wool (fine)	0.00076 - 0.00508	0.00003 - 0.00020	Excellent weathering	Lightweight thermal insulations, sound absorbers, and shock-cushioning materials. All-glass high-efficiency filter papers and paper admixtures
	(Ultrafine)	0.0000(est)-0.00076	0.0000 - 0.00003		

TABLE II

CHEMICAL COMPOSITIONS OF GLASSES USED TO FORM COMMERICAL FIBROUS GLASS (PERCENT) (4)

Type	SiO_2	Al_2O_3	CaO	MgO	B_2O_3	Na_2O	K_2O	ZrO_2	TiO_2	PbO	Fe
1. Low-alkali, lime-alumina borosilicate	54.5	14.5	22.0		8.5	0.5					
2. Soda-lime borosilicate	65.0	4.0	14.0	3.0	5.5	8.5	0.5				
3. Soda-lime borosilicate	59.0	4.5	16.0	5.5	3.5	11.0	0.5				
4. Soda-lime	73.0	2.0	5.5	3.5		16.0					
5. Lime-free soda borosilicate	59.5	5.0			7.0	14.5		4.0	8.0		2.0

When production changes occur in a direct melt process, the molten glass flow is temporarily diverted from the fiberizers and quenched with water. The glass immediately solidifies and fractures into fragments resembling a mixture of sand and aggregate, which is termed cullet. A major portion of the cullet is collected at the machine in hoppers for reuse in the melting furnace. If the furnace is not bled by producing cullet, the lighter components in the molten glass will volatilize and the composition of the glass will be unpredictably altered. This is not a problem in the marble-feed process because of the very small volume of molten glass held in the remelt pots. This problem along with other restrictions requires that direct melt processes be operated 24 hours a day all year round.

The quality of water needed for cullet cooling is not critical in that this water may be reused, with make-up water added to compensate for the water vaporized by contact with the hot glass. It is not important that the water be cooled, but sufficient suspended solids must be removed to prevent damage to the pumps. Colloidal silica suspensions are controlled by sufficient blowdown.

After the molten glass is divided into fibers and attenuated, the fibers are sprayed in mid-air with a phenolic water-soluble binder (glue) and are forced by a downward air draft onto a conveyor chain. This air flow is considerable and can vary from 55.6 standard cu m/kg product (890 standard cu ft/lb) for a rotary process to 215 standard cu m/kg product (3450 standard cu ft/lb) for a flame attenuation process. In many plants the newly formed fibers are oversprayed with water at the same time that the binder is applied. This overspray serves to cool the almost molten glass, minimizing both volatilization and early polymerization of the binder.

The binder is a thermosetting resin composed of a dilute solution of phenols (resin) and other chemical additives which provide terminal cross-linking and stability of the finished product. The resin itself is a complex mixture of methylophenols in both the monomer and polymer states formed by reacting phenol and formaldehyde. For some products, lubricants are applied to the newly formed fibers singly or in addition to the binder. The lubricant, usually a mineral oil, is used to minimize skin irritation (fiber abrasion) of persons handling the insulation. Tables III, IV, and V list the binders and lubricants used for the various insulation products. The properties and uses of each product are also listed. These tables serve again as examples. Rapidly changing technology has led to improved products since the lists were compiled.

The binder is diluted with two to six times its volume in water before it is applied to the product. The quality of the dilution water is important in that it must not contain solids of such size as to plug the spray nozzles and it must not contain sufficient concentrations of chemicals to interfere with the curing properties of the binder. For instance, magnesium and calcium found in hard water are incompatible with the binder. The quantity of binder applied to the fiberglass is governed by the type of product and process. It is measured as the ignition loss of the product and will range from 4 to 15 percent. Binder efficiency is defined as the percentage of binder applied to the fiberglass that remains in the product. Binder efficiencies typically

TABLE III

PRIMARY FIBROUS-GLASS-WOOL PRODUCTS

Product	Nominal Fiber Diameter, mm	Nominal Fiber Diameter, In.	Density Range, g/Cu. Cm.	Density Range, lb/cu. ft.	Binder	Maximum[1] Temperature Limit, °C	Major Application
Unbonded wool ("white")	0.013	0.0005	0.024 up	1.5 up 3.0 std.	Oil only	538	Heated equipment & appliances
Bonded wool (molded)	0.0096	0.00038			Phenolic resin	204	Pipe insulation-low temperature and low pressure heated pipe
Bonded wool	0.0086	0.00034	0.024-0.060	1.5-3.75	Phenolic resin	204	Appliance insulation
Bonded wool	0.013	0.0005	0.032-0.060	2.0-3.73	Phenolic resin	204	Appliance insulation
Bonded wool	0.016	0.0006	0.096	6.0	Phenolic plus high-temp resin	316	Duct insulation-fire barrier insulation
	0.016	0.0006	0.032-0.19	2.0-12.0	Phenolic resin	204	General purpose and fabricated forms, rolls, batts, blocks, boards, (plain, faced, asphalted), metal-mesh blankets; duct insulation, pouring wool
Bonded wool (fine fiber)	0.0010	0.00004	0.0096	0.6	Phenolic resin high-temp resin	316	Aircraft insulation
Bonded wool	0.0020	0.00008	0.0080	0.5	Phenolic resin Silicone oil		Flotation application
Bonded wool (fine fiber)	0.0030	0.00012	0.12-0.032	0.75-2.0	Phenolic plus high-temp resin	316	Wrapped on pipe insulation insulation
	0.0030	0.00012	0.12-0.032	0.75-2.0	Phenolic resin	204	General purpose insulation-sound control-shock cushing
	0.0030	0.00012	0.0048-0.0080	0.3-0.5	Phenol resin Silicone oil		Clothing interliner Seat cushioning
Bonded wool (fine fiber)	0.0043	0.00017	0.012-0.032	0.75-2.0	Phenol resin	204	Railroad-car, truck-trailer, and furnace insulation
Basic fine	0.00051	0.00002					
Fibers (bulk)	0.0030	0.00012			Unbonded		Fibers for papermaking
	0.0005-0.0030				Unlubricated		

[1]Maximum surface temperature in contact with insulation under most favorable conditions, organic lubricants and binders begin to oxidize from hot surface at 135°C. Actual loss of organic material depends on amount present, access to oxygen, and thickness and density of insulation. There is no low-temperature limitation so far discovered down to -185°C.

TABLE IV

FIBROUS-GLASS MATS--BASIC FORMS

Primary Mat Products					
Product	Nominal Fiber Diameter, mm	Nominal Fiber Diameter, in.	Weight Range, g/sq. cm.	Thickness[1] Range, mm,	Notes
Staple fiber mat	0.015 - 0.016	0.00060 - 0.00065		0.25 - 2.5	Resins, starch, gelatin and sodium silicate binder. Fibers in random lay
Reinforcing mat	0.058 - 0.096	0.00023 - 0.00038	0.015 - 0.091		Cut strands of continuous filament bonded in jack-straw (random) arrangement. Resin-type binders
Staple mat (random-reinforced)	Base mat, 0.016	0.00065			Base mat of staple fibers intertwined with endless continuous-filament strand in a random arrangement. Phenolic binder
Staple mat (parallel-reinforced)	Base mat 0.0.6	0.00065		0.5	Base mat of staple fibers interlaid with parallel strands of continuous filament for undirectional strength. Phenolic binder

[1] Thickness measured at 2.75 psi. That is 11 lb. load on 1/4-in. diameter platen.

TABLE V

FIBROUS GLASS PACKS--BASIC FORMS

Product	Fiber Diameter mm, Nominal	Fiber Diameter, in., Nominal	Notes
Bonded packs (coarse fibers)	0.11 0.15 0.20 2.5	0.0045 0.0060 0.0080 0.100	Packs 1/2 and 1 in. thick water-soluble or insoluble binders. Used in air filters, air washers and as distillation column packing
Curly wool	0.029	0.00115	Bulk wool - usually lubricated. Special uses in process industries

range from 60 to 70 percent. That percentage lost either goes off in the forming air or curing oven air or remains on the chain.

The fibers fall to the chain where they collect in the desired mass and depth required for the ultimate product. The density of the fiber mass (mat) on the conveyor is controlled by the fiber production rate and the speed of the conveyor chain. For a rotary forming process the chain speed will range from 127 to 508 linear cm/sec (50-200 ft/min). This mat then proceeds by conveyor through curing (200-260°C) and cooling ovens. It is compressed, and an appropriate backing (asbetos, paper, aluminium, etc.) may be applied as a vapor barrier. The product is then sized and/or rolled and packaged. The cured mat may instead be shredded to make blowing and pouring wool. This product is used where existing structures require insulating material that can be blown or poured into the walls. The thermal properties, however, are inferior to those of backed insulation.

The cured phenolic resin imparts a yellow color to the glass wool, which may not be appealing to the customer. Consequently, various dyes are applied to the fiberglass in the binder spray.

Two types of chains are employed in the forming area. Flexible wire mesh conveyor belts were originally used, but many have since been replaced with flight conveyors. These are hinged steel plates that contain numerous holes or slits. The air stream which transports the glass fibers to the conveyor also contains droplets of resinous binder which have not adhered to the glass fibers. Many of these droplets deposit resin on the chain, and if not removed, the resin build-up will eventually restrict passage of the air stream. When the deposit becomes sufficiently great, insulation fiberglass formation is no longer possible, necessitating replacement of the conveyor.

Historically, the wire mesh chain has been cleaned while in service by routing the chain through a shallow pan containing a hot caustic water solution (refer to Figure IV). Fresh caustic makeup to the pans created caustic overflow containing phenolic resin and glass fiber.

Another method of chain cleaning uses either fixed position pressurized water sprays or rotating water sprays. Unlike the caustic soda bath processes, the waste waters from this method are amenable to treatment and recirculation. Water spray chain cleaning has replaced caustic chain cleaning at all but one plant which uses a combination of the two methods. Although both methods have been used to clean wire mesh chains, it is impractical to caustic clean flight conveyors. Unlike the flexible wire mesh chains, the hinged plates of the flight conveyor cannot be so easily routed through a pan. Furthermore a flight conveyor is more expensive than a wire mesh chain, and corrosion caused by the caustic is of greater concern. Spray cleaning has the added advantage of cooling the forming chain, thereby decreasing both volatilization and polymerization of the phenolic resin.

Pipe insulation is made in various ways. One principal method involves wrapping uncured insulation about mandrels and curing the bundles batchwise in ovens. The mandrel is a perforated pipe of the appropriate dimensions. Caustic is still used by the industry to batch clean

FIGURE IV

WIRE MESH CHAIN CLEANING (5)

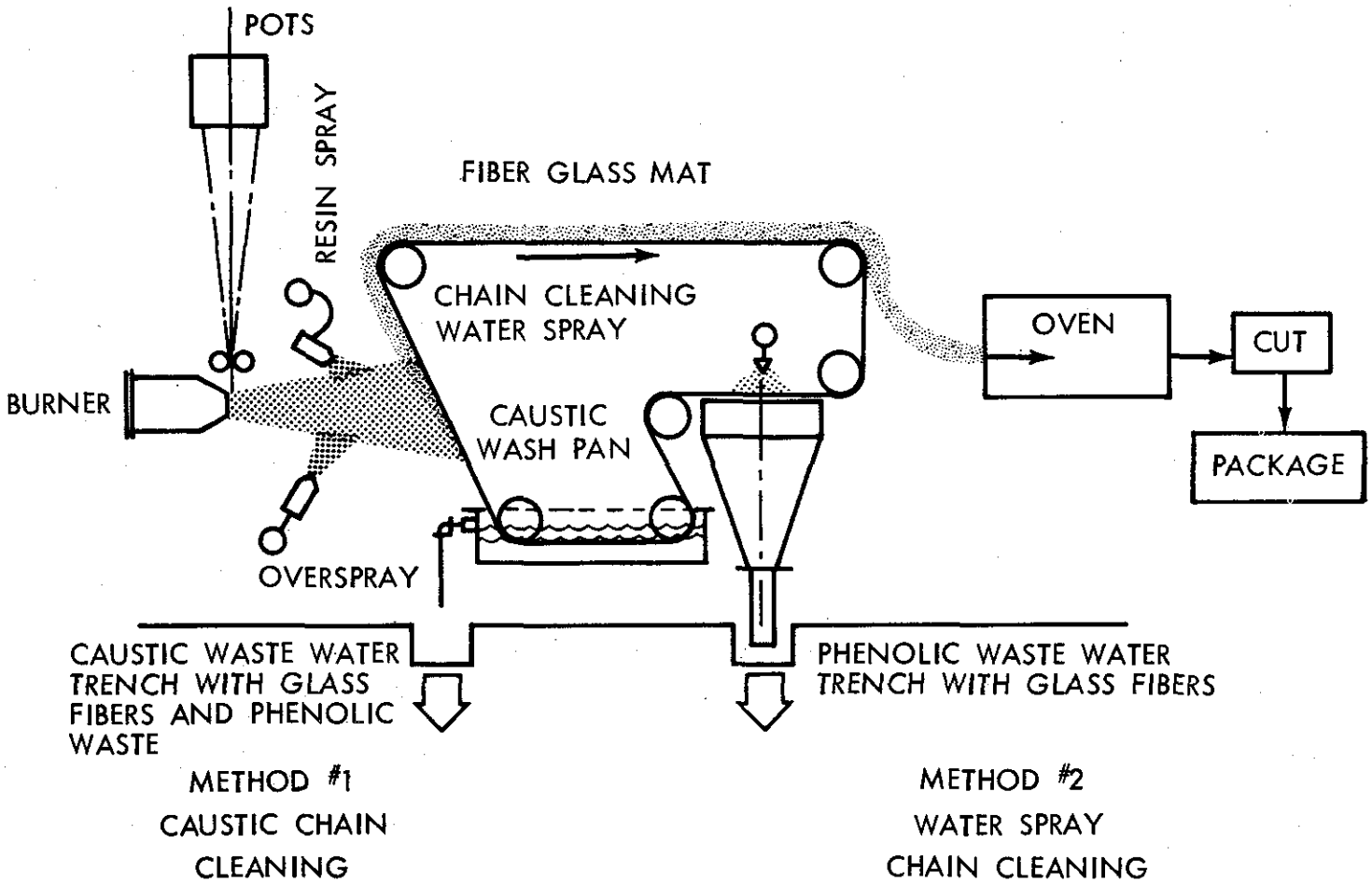

mandrels. However, the volumes involved are much less than those required for chain washing and are consequently much less of a problem.

Another source of water pollution is hood wash water. The hood is either a stationary or a rotating wall used to maintain the air draft in the forming area. It is necessary to wash the hood in order to keep any wool that has agglomerated there from falling onto the chain and causing non-uniformity of the product.

Insulation fiberglass plants experience both air particulate and odor problems. Particulate emissions are found in the glass furnace, forming area, and curing and cooling oven exhaust gases. The principal source of odors is volatilized phenols in the curing and cooling ovens exhaust gases. Several methods, involving both wet and dry processes, are being investigated in an effort to reduce the air emissions. The industry considers air pollution control to be a more serious problem than water pollution control.

Sales and Growth

The insulation fiberglass industry is currently at 100 percent production. Current annual glass wool production is estimated at 0.77 million metric tons (1700 million pounds) a year. Profits before tax on sales range from about 9 percent to 20 percent with a median of 12 percent. Table VI summarizes recent sales. Supply and demand projections estimate 8 percent growth a year for the next five years. This picture may substantially change in light of the recent trend in fuel conservation, a situation which will create even more demand for insulation materials. In anticipation of this growth, new plants and expansions are planned in high demand areas. In addition, the industry is constantly revamping its plants, utilizing the latest technology to obtain more and a better product. Major changes are made at times of furnace rebuilding, normally about every five years. Although the industry may operate old plants, it operates new processes.

The principal Federal government influence on demand is brought about through changes or modifications in building code requirements. Such a change took place recently when the Department of Housing and Urban Development, Federal Housing Administration, revised the Minimum Property Standards for multi-family and single-family housing in order to fulfill the Department's commitments to the national energy conservation policy.

The revision, which took effect in July, 1971 for single-family construction and in June, 1972, for multi-family construction, went into effect immediately for all mortgage insurance projects for which a letter of feasibility has not been issued and for low rent public housing projects for which a program reservation has not been issued. This implementation will definitely provide more economical operating costs for the heating and cooling of residential units and will also conserve the nation's energy resources.

The major uses for glass wool are wall insulation, roof decking, acoustical tile, pipe insulation, ventilation ducts, and appliance and equipment insulation. In the areas of residential insulation and acoustical tile, fiberglass has largely replaced its competition (e.g.,

TABLE VI

U.S. SHIPMENTS AND VALUE OF WOOL GLASS FIBER 1964-1971 (11)

Insulation Use	1964			1965			1966			1967		
	MM lb	$ MM	¢/lb	MM lb	$ MM	¢/lb	MM lb	$ MM	¢/lb	MM lb	$ MM	¢/lb
Structural Building	368	76	20.7	438	93	21.1	484	105	22.6	484	109	22.5
Industrial, Pipe & Equipment	570	151	26.5	608	158	26.0	608	173	28.5	554	170	30.7
Total	938	227	24.2	1046	251	24.0	1092	278	25.9	1038	279	26.9

Insulation Use	1968			1969			1970			1971		
	MM lb	$ MM	¢/lb	MM lb	$ MM	¢/lb	MM lb	$ MM	¢/lb	MM lb	$ MM	¢/lb
Structural Building	557	133	23.9	627	158	25.2	644.8	165.6	25.7	--	--	--
Industrial, Pipe & Equipment	567	179	31.6	675	198	29.3	541.5	190.6	35.2	--	--	--
Total	1124	312	27.8	1302	356	27.3	1186.3	356.2	30.0	1518.7	426.9	28.2

Note: Values are average manufacturers' net selling prices, f.o.b. plant, after discounts and allowances, and excluding freight and excise taxes.

Source: Department of Commerce "Current Industrial Reports"

mineral wool, perlite, urethane, wool fiberboard, Tectum, lightweight concrete or gypsum, foam glass, and ceramic insulation) because of the combined properties of low cost, light weight, low thermal conductivity, and fire resistance. In the residential insulation sector, fiberglass products have an estimated 90 percent of the market. The principal competition for non-residential uses are urethane, styrene, and calcium silicate. Due to the greater competition, fiberglass products have only a relatively small share of this market.

An estimated breakdown of products for the year 1971 is given below. As seen batt insulation (standard building insulation) is the principal product, averaging 66 percent of total production.

ESTIMATE OF U.S. CONSUMPTION OF
WOOL GLASS FIBER, 1971

Batt Insulation	450		1000	
Acoustic Tiles	41		90	
Board Insulation	80		175	
Pipe, Appliance and Equipment	75		165	
Miscellaneous	40		89	
TOTAL	686	Thousand metric tons	1519	Million lb

At present only three companies produce fiberglass insulation. The nineteen existing plants and the estimated production by their parent companies are listed in Table VII. Figure V is a production size distribution graph of these plants. Because a high volume production is necessary and the glass fiber operation is difficult to scale down, there are no very small plants when compared to other industries. The smallest plant produces 2270 metric tons (5 million pounds) of specialty products a year.

TABLE VII

INSULATION FIBERGLASS PLANTS

Company	Approximate Percent of Industry Production	Plant Locations
Owens-Corning Fiberglas Inc.	77	Barrington, NJ Fairburn, GA Kansas City, KS Newark, OH Santa Clara, CA Waxahachie, TX
Johns-Manville Corporation	10	Cleburne, TX Corona, CA Defiance, OH (3) Parkersburg, WVA Penbyrn, NJ Richmond, IN Winder, GA
Certain-Teed Products Corporation	13	Berlin, NJ Kansas City, KS Mountaintop, PA Shelbyville, IN (recently purchased from PPG Industries)

FIGURE V

SIZE DISTRIBUTION OF INSULATION FIBERGLASS PLANTS

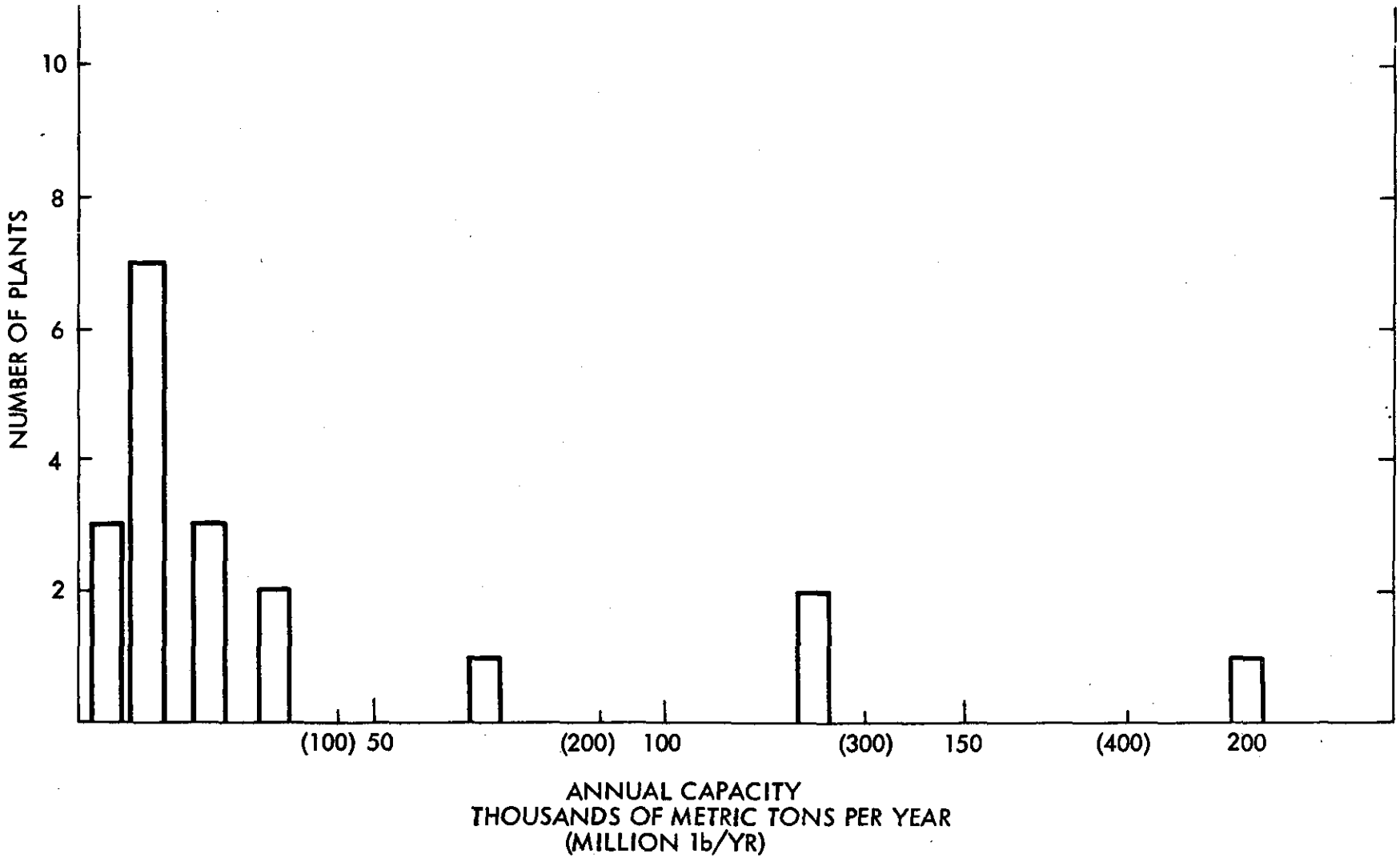

SECTION IV

INDUSTRY CATEGORIZATION

Introduction

In developing effluent limitations guidelines and standards of performance for new sources for a given industry, a judgment must be made by EPA as to whether effluent limitations and standards are appropriate for different segments (subcategories) within the industry. The factors considered in determining whether such subcategories are justified for the insulation fiberglass manufacturing segment of the glass manufacturing category of point sources are:

1. Wastes Generated
2. Treatability of Waste Waters
3. Manufacturing Process
4. Chain Cleaning Process
5. Plant Size
6. Plant Age
7. Raw Materials
8. Product
9. Air Pollution Control Equipment

For the purposes of this report, the insulation fiberglass manufacturing segment consists of primary plants in which molten glass is either produced from the raw materials or from glass marbles, continuously fiberized and chemically bonded with phenolic resins into a wool-like insulating material. As the result of an intensive literature search, plant inspections, and communications with the industry, it is the judgment of this Agency that the primary insulation fiberglass industry should be considered as a single subcategory. Not included are secondary plants which process wasted textile fiberglass and research and development facilities.

Factors Considered

1. Waste Generated

From evaluation of the available data it is concluded that the types of wastes generated in producing insulation fiberglass, such as suspended solids, dissolved solids, phenols, and oxygen demanding substances, are common to all such plants. The only exceptions are dyes and water treatment backwashes. The former parameter presents no problem insofar as quality of recycled water is concerned. The quality of water treatment backwashes varies considerably among the industry depending upon the intake water quality. The principal factor of concern to the industry is water hardness which will inhibit the bonding properties of the phenolic resins. The generally similar nature of the wastes generated in insulation fiberglass production indicates that the industry should be considered as a single subcategory.

2. Treatability of Waste Waters

From discussions with the industry and from plant inspections it was concluded that in a recycle system for an insulation fiberglass plant only three basic parameters in the process water affect its treatability: suspended solids, dissolved solids, and pH. The recycled waters can be adequately treated for reuse by coarse filtration, pH control (if necessary), and fine filtration or coagulation - settling. Blowdown can be eliminated as overspray or binder dilution water thus checking the buildup of dissolved solids. Through proper design of the treatment system there should be no forseeable reason other than plant expansion that these basic systems need to be altered in order to accommodate varying waste load characteristics. Therefore treatability of waste water factors indicates that all insulation fiberglass plants fit into a single subcategory.

3. Manufacturing Process

As described in Section III of this document, there are two types of glass fiber forming processes, flame attenuation and rotary. In the forming stage both processes are dry, and since the products are the same, water quality is not affected.

4. Chain Cleaning Process

As described in Section III, there are also two basic methods for cleaning the forming chain of the glass fibers and phenolic resins. One method consists of dragging the wire mesh chain, on its return path to the forming area, through a hot caustic bath. The second method consists of spraying the wire mesh chain or flight conveyor with high velocity water.

The resultant wastes from caustic cleaning are extremely difficult to treat and unless considerable dilution is provided the wastes are incompatible with the phenolic resins and are not suitable for recycling. The blowdown from spray washing is amenable to treatment and recycle.

Two subcategories, therefore, would seem appropriate. However, at the present time only one plant employs caustic chain washing. The remainder of the industry has switched to spray washing and has future plans to employ only spray washing equipment. The one existing plant that uses caustic baths does so in conjunction with spray washing equipment and it is not necessary in this case to blowdown from the caustic bath. The carryover caustic on the chain is so diluted by the wash water volumes that no problems are anticipated in the recycle system.

For these reasons the industry cannot be meaningfully subcategorized according to chain cleaning techniques.

5. Plant Size

It has been determined from the data (Tables X and XI) and from inspections that despite the wide range in plant capacities plant size has no effect upon the quality of waste waters. Plant size does affect the costs of installing total recycle systems because of the effect of plant size on the volume of water used. In the economic analysis of Section VIII it is concluded that the cost of recycle per unit production will increase as much as threefold for plants producing less than 9000 metric tons per year. However, plants of this size usually produce specialty products (e.g. pipe insulation) which command a higher price per unit weight than standard residential insulation. This factor will minimize the financial impact for the smaller plants. Therefore, subcategorization according to plant size is not indicated.

6. Plant age

Glass wool plants span an age of from 2 years to more than 25 years since plant start-up. About 30 percent of the plants are 10-15 years old, while 25 percent are less than 10 years old. All plants that are at least 5 years old have undergone considerable upgrading of the production processes and in many cases facilities have been expanded with installation of state of the art processes. Waste water characteristics are therefore similar for plants despite any difference in age. Except for old plants of large capacity, plant age should not significantly affect costs of installing the facilities. In large old plants space limitations and major pipe relocations will increase the capital costs. However, the capital cost of recycled water is lowest for large plants and this will help compensate for the increased installation costs. Hence, plant age is not an appropriate basis for subcategorization.

7. Raw Materials

The raw materials required for wool glass are much the same as for standard massive glass, 55-73 percent silica and 27-45 percent fluxing oxides (e.g., limestone and borates). The compositions of typical glasses are listed in Table I. Once the glass is made either as fibers or cullet it is for all practical purposes inert in water, and thus will not chemically affect waste water quality.

The type of resin used, however, will exert some influence on both air and water quality. The industry is continually formulating new binder

mixtures in an effort to minimize manufacturing and environmental problems. However, the industry can not be meaningfully subcategorized according to type of binder used for the following reasons. Different products can require different binder formulaticns, and these products can be made at different times on the same line. Composition changes in the binder can occur at any time, as the industry tries to improve the product and decrease raw material costs. No matter what formulation of resin is used, the general waste characteristics are the same and a chemical - physical treatment system will not be affected.

8. Product

The type of product made will affect the chain wash water quality in that different products may require different resin formulations. However, for the same reasons given in the paragraph above, the industry cannot be meaningfully subcategorized on this topic.

9. Air Pollutic n Control Equipment

The type of system used to control air pollution will definitely affect the water treatment scheme. If water is used to scrub the forming air, this volume of water will far surpass that volume used to clean the chains. This occurs because of the large volumes of forming air used and the small size of the particulates.

One company in order to avoid treating and disposing of these high volumes of water has used high energy air filters using fiberglass filters. This and another company have altered the binder composition in order to reduce volatilization. The second company has also improved the design of the initial drop out boxes in order to minimize the amount of particulates going to the secondary emission control devices.

A third company buys its resin and is currently unable to operate a closed process water system when additional water is used for advanced air emission control devices such as electrostatic precipitators. Additoinal process modifications and operating experience will be necessary before a total recirculation system can be operated in conjunction with advanced air emission control systems.

Rather than creating a separate subcategory this problem will be handled as an exception to best practicable control technology currently available. Best available technology and best demonstrated control technology can include process changes. Such changes are currently employed by 2 of 3 companies in the industry.

SECTION V

WASTE CHARACTERIZATION

Waste Water Constituent Analysis

A general water flow diagram for an insulation fiberglass plant is pictured in Figure VI. Non-process waters identified in this diagram include boiler blowdown, noncontact cooling water and water treatment backwashes. Those parameters that are likely to be found in significant quantities in each of the waste streams are listed in Table VIII. A more detailed analysis of each waste flow (i.e., concentration ranges) is not possible since the combined waste stream only has been of interest to the industry from whom most of the data were obtained. The principal process waste streams within the process are the chain cleaning water and forming air scrubber water.

The principal uses for steam are for building heating and steam attenuation. In the latter case the industry has been converting to compressed air attenuation. The accompanying boiler blowdown in this case is replaced with non-contact cooling water for air compressors.

Flow Rate Analysis

The quantity of water used varies significantly between plants. Factors such as design of furnace, method of chain cleaning and method of air emissions control will affect quantities of water. For example, plants at which marbles are remelted require very little furnace cooling water, since the remelt furnaces are small melting pots. Large continuous drawing furnaces, however, need large quantities of water to control oven temperatures and to protect the furnace bricks. Table IX lists chain wash water flows for plants of various sizes. Again there is no correlation between plant size and water usage for chain washing, because each of the three insulation fiberglass producers uses chain wash water at different pressures and therefore at different flow rates.

Raw Waste Loads

Table X summarizes the raw waste concentrations for several plants. Although the numbers are not completely comparable because of treatment differences and different blowdown percentages, the table nevertheless shows a wide variance in waste water composition. Other factors affecting the raw waste load include binder composition, chain temperature, and other thermal and time factors affecting the rate of resin polymerization. Annual raw waste loads in metric tons are computed in Table XI. The values are based on an average of five parameters at four plants.

FIGURE VI

GENERAL WATER FLOW DIAGRAM FOR AN INSULATION FIBERGLASS PLANT

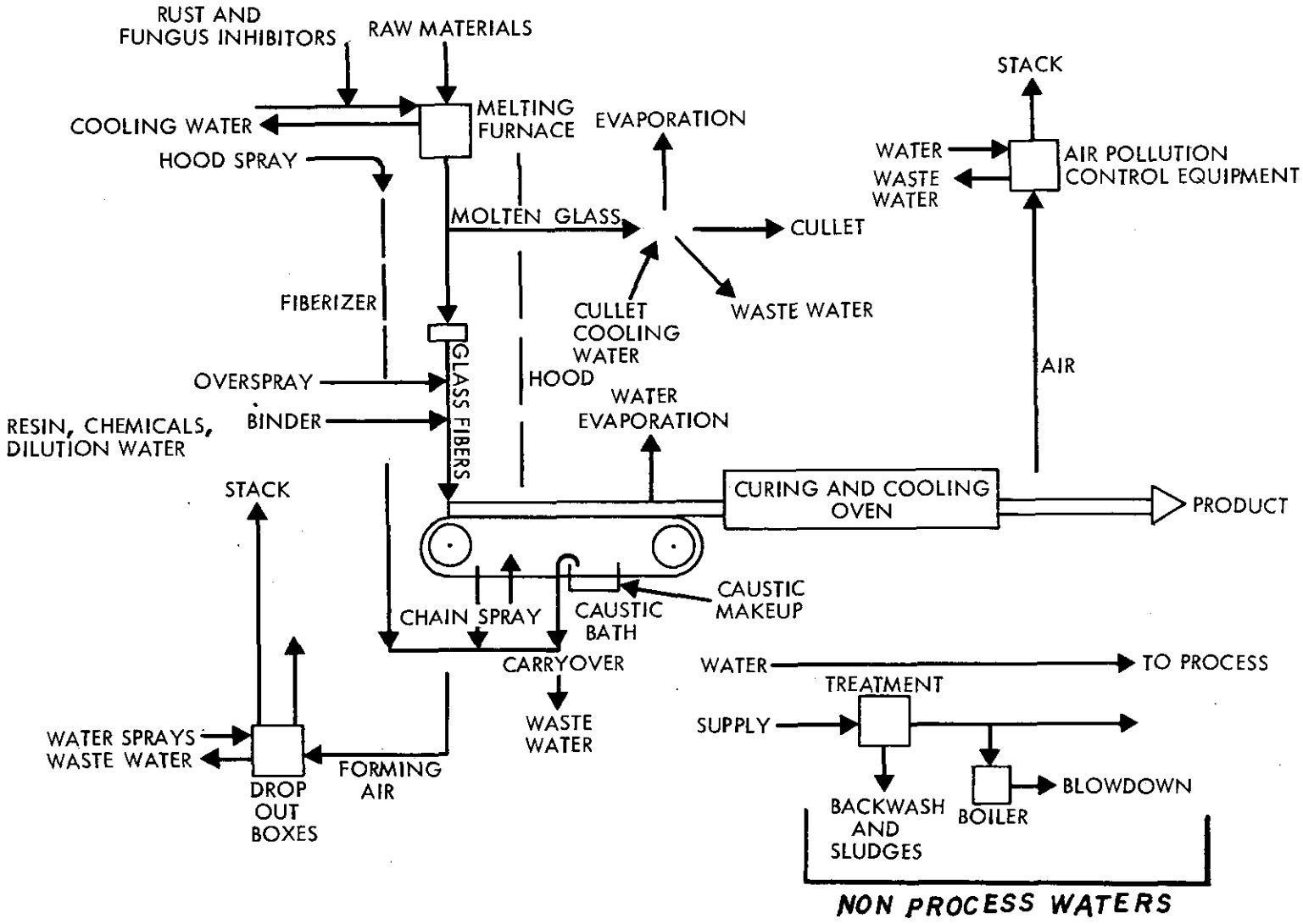

TABLE VIII

CONSTITUENTS OF INSULATION

FIBERGLASS PLANT WASTE STREAMS

Waste Stream	Phenols	BOD^5	COD	Dissolved Solids	Suspended Solids	Oil & Grease	Ammonia	pH	Color	Turbidity	Temperature	Specific Conductance
Air Scrubbing	x	x	x	x	x				x	x	x	x
Boiler Blowdown				x	x					x	x	x
Caustic Blowdown				x	x			x		x		
Chain Spray	x	x	x	x	x	x	x	x	x	x		x
Cullet Cooling				x	x						x	
Fresh Water Treatment				x	x			x		x	x	x
Hood Spray	x	x	x	x	x	x	x	x	x	x		x
Noncontact Cooling Water				x							x	x

TABLE IX

CHAIN WASH WATER USAGE

Plant	Plant Size[1]		Water Usage Chain Sprays	
	Thousands of Metric Tons Per Year	Million pounds per year	liters/sec.	gpm
A	120	270	44	700
B	34	75	38	600
C	35	77	14	200
D	32	71	63	1000
E	18	41	50	800
F	16	35	8	120
G	2	5	3	48

[1] All production figures are estimates.

TABLE X

RAW WASTE LOADS
FOR INSULATION FIBERGLASS PLANTS

Plant	Phenol mg/l	BOD5 mg/l	COD mg/l	TSS mg/l	TDS mg/l	TURBIDITY	pH	Percent Blowdown[3]
H	363	156	2500-4000	116-561				
F[1]	2564	7800	43,603	360	3000-5000			8.3
G	4.11			76	822		7.7-8.9	13.0
A	212	991	6532	769	10,000-20,000[2]			1.5
B[1]	240	6200	23,000	200	16,000	200	8.0	1.0
D[1]					40,000[2]			2.3
I	11-98	900	3,290	690	2,080		6.1-12.2	

1 - Sample taken from water recirculation system

2 - Given by company with no backup data

3 - Defined as percent total process water used as overspray or binder dilution

TABLE XI

ANNUAL RAW WASTE LOADS

Plant	Estimated Size (1000 metric tons per yr.)	Kilograms Pollutant Per Metric Ton Product				
		Phenol	Suspended Solids	BOD_5	COD	Dissolved Solids
A	120	0.36	1.29	1.67	11.0	
E	18	0.06	4.45	8.90	31.5	18.0
H	16	0.90	0.40	8.1		
I	131	0.33	5.60	6.65	24.2	14.1
Average		0.41	2.90	4.40	18.7	16.0
Annual Raw Waste Load[1] (Metric tons per yr.)		316	2240	3390	14,400	12,300

[1] Derived by multiplying kg/metric ton by 771,000 metric tons product per year by 1/1000 metric ton per kg.

One particular waste stream addressed by this report is cullet cooling water. Suspended solids concentrations are extremely variable and depend upon how many fiberizers are being bypassed. Concentrations in the waste water can range from a few hundred to tens of thousands mg/l even after settling. A size distribution study of the suspended solids resulting from cullet cooling appears in Table XII.

As seen from this table 99.50 percent of the cullet should be amenable to primary settling. However, especially at high cullet producing times, an appreciable amount of minus 100 mesh glass particles can remain suspended in the waste water. Visual inspections at some plants noted cullet scattered about the river banks below discharges of cullet cooling water.

Summary

In summary, the quantity of water used and raw waste loads are not relatable in a practical manner to production levels or techniques. Of the 19 existing plants, there are as many different formulas for relating these factors. There are significant differences between plants even within the same company. A compensating factor, however, is the fact that all such wastes are amenable to the same general type of chemical and/or physical treatment.

TABLE XII

SIEVE ANALYSIS

ON WASTE CULLET WATER

U.S. Sieve Number	um Equivalent	% By Weight Retained
50	297	98.30
100	149	1.20
140	105	0.30
200	74	0.05
325	44	0.01
400	37	0.05
Finer Passed		0.09
		100.00%

SECTION VI

POLLUTANT PARAMETERS

Pollutants and Pollutant Parameters

Upon review of the Corps of Engineers Permit Applications for discharge of waste waters from insulation fiberglass plants, EPA data, industry data, and observations made during EPA plant inspections, the following chemical, physical, and biological properties or constitutents are found within the process wastewater effluent.

- Phenols
- BOD_5
- COD
- Dissolved Solids
- Total Suspended Nonfilterable Solids
- Oil and Grease
- Ammonia
- pH
- Color
- Turbidity
- Temperature (Waste heat)
- Specific Conductance

The basic constituents of the binder are phenol, formaldehyde, urea, and ammonia, which react to form various mono-and-poly-methylol phenols. Therefore, free phenols will occur in any water that has contact with uncured resin. Phenol concentrations range from 4 mg/l in once-through process waters to several hundred mg/l in recycled waters. The higher concentrations consist of colloidal suspensions of resins in a partially polymerized state. However, as some companies have found, a significant portion of the total phenols also occur in a free state.

Because of the nature of the organic compounds used in the binder, a BOD_5 will exist. Values range from 156 mg/l to 7,800 mg/l, with the higher values again representing recycled waters.

For the same reasons given above, a sizeable chemical oxygen demand will exist in the raw waste stream. Values range from 3,290 mg/l to 43,603 mg/l, the higher values occurring in recycled waters.

Dissolved (filtrable) organics and super-fine colloidal organics, that are classified as being filtrable according to Standard Methods (12), will increase the background dissolved solids concentrations significantly as a result of chain washing and wet air pollution control. Net increases of 200 mg/l to gross concentrations of 40,000 mg/l are noted. A closed water cycle will significantly raise the level of this parameter.

Conglomerated glass fibers and partially polymerized resins will appear as suspended solids in the chain wash water. Values have been reported to be as high as 770 mg/l in untreated waste waters.

Mineral oils are frequently added to the binder to alleviate abrasion problems. The amounts of lubricant used are proprietary information but relatively small. Slight oil sheens have been noted in the waste streams of some plants during inspections. Values for final effluents range from 7.5 mg/l to 140 mg/l.

Ammonia is sometimes added to the binder for stabilization purposes. The rate of binder polymerization is decreased by an increasing pH. Ammonia can also be added to the chain wash water to inhibit polymerization in order to minimize screen and filter plugging. Ammonia concentrations in effluents range from 0.6 mg/l to 4.83 mg/l.

As previously mentioned the binder polymerization reaction is pH dependent. Unless neutralization is practiced, waste water from an insulation fiberglass plant will be alkaline with a pH greater than 9.0.

Color will result from both the polymerized resin (yellow to brown) and any dye that is added to the product in the binder spray. Colored waste streams have been seen at nearly all the plants inspected. It is especially noticeable at plants with process water recirculation systems.

Turbidity is a measure of the light absorbing properties of the constitutents in water. For an insulation fiberglass plant these result from colloidal suspensions and from dyes. Values range from 55 to 200 Jackson Turbidity Units for once-through waters.

Since high temperatures are required to make molten glass (2700°F.), thermal increases in contact and non-contact waters will be noted.

Properties of the Pollutants and Pollutant Parameters

The following paragraphs describe the chemical, physical and biological properties of the pollutants and pollutant parameters that exist for this industry. The undesirable characteristics that these parameters exhibit or indicate are stated, giving reason why these parameters were selected.

Phenols

Phenols and phenolic wastes are derived from petroleum, coke, and chemical industries; wood distillation; and domestic and animal wastes. Many phenolic compounds are more toxic than pure phenol; their toxicity varies with the combinations and general nature cf total wastes. The effect of combinations of different phenolic compounds is cumulative.

Phenols and phenolic compounds are both acutely and chronically toxic to fish and other aquatic animals. Also, chlorophenols produce an unpleasant taste in fish flesh that destroys their recreational and commercial value.

It is necessary to limit phenolic compounds in raw water used for drinking water supplies, as conventional treatment methods used by water supply facilities do not remove phenols. The ingestion of concentrated solutions of phenols will result in severe pain, renal irritation, shock and possibly death.

Phenols also reduce the utility of water for certain industrial uses, notably food and beverage processing, where they create unpleasant tastes and odors in the product.

Biochemical Oxygen Demand (BOD)

Biochemical oxygen demand (BOD) is a measure of the oxygen consuming capabilities of organic matter. The BOD does not in itself cause direct harm to a water system, but it does exert an indirect effect by depressing the oxygen content of the water. Sewage and other organic effluents during their processes of decomposition exert a BOD which can have a catastrophic effect on the ecosystem by depleting the oxygen supply. Conditions are reached frequently where all of the oxygen is used and the continuing decay process causes the production of noxious gases such as hydrogen sulfide and methane. Water with a high BOD indicates the presence of decomposing organic matter and subsequent high bacterial counts that degrade its quality and potential uses.

Dissolved oxygen (DO) is a water quality constituent that, in appropriate concentrations, is essential not only to keep organisms living but also to sustain species reproduction, vigor, and the development of populations. Organisms undergo stress at reduced DO concentrations that make them less competitive and less able to sustain their species within the aquatic environment. For example, reduced DO concentrations have been shown to interfere with fish population through delayed hatching of eggs, reduced size and vigor of embryos, production of deformities in young, interference with food digestion, acceleration of blood clotting, decreased tolerance to certain toxicants, reduced food efficiency and growth rate, and reduced maximum sustained swimming speed. Fish food organisms are likewise affected adversely in conditions with suppressed DO. Since all aerobic aquatic organisms need a certain amount of oxygen, the consequences of total lack of dissolved oxygen due to a high BOD can kill all inhabitants of the affected area.

If a high BOD is present, the quality of the water is usually visually degraded by the presence of decomposing materials and algae blooms due to the uptake of degraded materials that form the foodstuffs of the algal populations.

Chemical Oxygen Demand (COD)

COD is a measure of the quantity of oxidizable materials present in water. In some instances, a rough correlation between COD and BOD can be established. Since an oxygen demand will exist, this parameter exhibits the same adverse conditions that are indicated by BOD.

Dissolved Solids

In natural waters the dissolved solids consist mainly of carbonates, chlorides, sulfates, phosphates, and possibly nitrates of calcium, magnesium, sodium, and potassium, with traces of iron, manganese and other substances.

Many communities in the United States and in other countries use water supplies containing 2000 to 4000 mg/l of dissolved salts, when no better water is available. Such water is not palatable, may not quench thirst,

and may have a laxative action on new users. Waters containing more than 4,000 mg/l of total salts are generally considered unfit for human use, although in hot climates such higher salt concentrations can be tolerated whereas they could not be in temperate climates. Waters containing 5,000 mg/l or more are reported to be bitter and act as bladder and intestinal irritants. It is generally agreed that the salt concentration of good, palatable water should not exceed 500 mg/l.

Limiting concentrations of dissolved solids for fresh-water fish may range from 5,000 to 10,000 mg/l, according to species and prior acclimatization. Some fish are adapted to living in more saline waters, and a few species of fresh-water forms have been found in natural waters with a salt concentration of 15,000 to 20,000 mg/l. Fish can slowly become acclimatized to higher salinities, but fish in waters of low salinity cannot survive sudden exposure to high salinities, such as those resulting from discharges of oil-well brines. Dissolved solids may influence the toxicity of heavy metals and organic compounds to fish and other aquatic life, primarily because of the antagonistic effect of hardness on metals.

Water with total dissolved solids over 500 mg/l has decreasing utility as irrigation water. At 5,000 mg/l water has little or no value for irrigation.

Dissolved solids in industrial water can cause foaming in boilers and cause interference with cleaness, color, or taste of many finished products. High contents of dissolved solids also tend to accelerate corrosion.

Specific conductance is a measure of the capacity of water to convey an electric current. This property is related to the total concentration of ionized substances in water and water temperature. This property is frequently used as a substitute method of quickly estimating the dissolved solids concnetration.

Total Suspended Solids

Suspended solids include both organic and inorganic materials. The inorganic components include sand, silt, and clay. The organic fraction includes such materials as grease, oil, tar, animal and vegetable fats, various fibers, sawdust, hair, and various materials from sewers. These solids may settle out rapidly and bottom deposits are often a mixture of both organic and inorganic solids. They adversely affect fisheries by covering the bottom of the stream or lake with a blanket of material that destroys the fish-food bottom fauna or the spawning ground of fish. Deposits containing organic materials may deplete bottom oxygen supplies and produce hydrogen sulfide, carbon dioxide, methane, and other noxious gases.

In raw water sources for domestic use, state and regional agencies generally specify that suspended solids in streams shall not be present in sufficient concentration to be objectionable or to interfere with normal treatment processes. Suspended solids in water may interfere with many industrial processes and cause foaming in boilers or encrustations on equipment exposed to water, especially as the temperature rises. Suspended solids are undesirable in water for

textile industries; paper and pulp; beverages; dairy products; laundries; dyeing; photography; cooling systems, and power plants. Suspended particles also serve as a transport mechanism for pesticides and other substances which are readily sorbed into or onto clay particles.

Solids may be suspended in water for a time and then settle to the bed of the stream or lake. These settleable solids discharged with man's wastes may be inert, slowly biodegradable materials, or rapidly decomposable substances. While in suspension, they increase the turbidity of the water, reduce light penetration and impair the photosynthetic activity of aquatic plants.

Solids in suspension are esthetically displeasing. When they settle to form sludge deposits on the stream or lake bed they are often much more damaging to the life in water, and they retain the capacity to displease the senses. Solids, when transformed to sludge deposits, may do a variety of damaging things, including blanketing the stream or lake bed and thereby destroying the living spaces for those benthic organisms that would otherwise occupy the habitat. When of an organic and therefore decomposable nature, solids use a portion or all of the dissolved oxygen available in the area. Organic materials also serve as a seemingly inexhaustible food source for sludgeworms and associated organisms.

Turbidity is principally a measure of the light absorbing properties of suspended solids. It is frequently used as a substitute method of quickly estimating the total suspended solids when the concentration is relatively low.

Oil and Grease

Oil and grease exhibit an oxygen demand. Oil emulsions may adhere to the gills of fish or coat and destroy algae or other plankton. Deposition of oil in the bottom sediments can inhibit normal benthic growths, thus interrupting the aquatic food chain. Soluble and emulsified material ingested by fish may taint the flavor of the fish flesh. Water soluble components may exert toxic action on fish. Floating oil may reduce the re-aeration of the water surface and in conjunction with emulsified oil may interfere with photosynthesis. Water insoluble components damage the plumage and coats of water animals and fowls. Oil and grease in water can result in the formation of objectionable surface slicks preventing the full aesthetic enjoyment of the water.

Oil spills can damage the surface of boats and can destroy the esthetic characteristics of beaches and shorelines.

Ammonia

Ammonia is a common product of the decomposition of organic matter. Dead and decaying animals and plants along with human and animal body wastes account for much of the ammonia entering the aquatic ecosystem. Ammonia exists in its non-ionized form only at higher pH levels and is the most toxic in this state. The lower the pH, the more ionized ammonia is formed and its toxicity decreases. Ammonia, in the presence

of dissolved oxygen, is converted to nitrate (NO_3) by nitrifying bacteria. Nitrite (NO_2), which is an intermediate product between ammonia and nitrate, sometimes occurs in quantity when depressed oxygen conditions permit. Ammonia can exist in several other chemical combinations including ammonium chloride and other salts.

Nitrates are considered to be among the poisonous ingredients of mineralized waters, with potassium nitrate being more poisonous than sodium nitrate. Excess nitrates cause irritation of the mucous linings of the gastrointestinal tract and the bladder; the symptoms are diarrhea and diuresis, and drinking one liter of water containing 500 mg/l of nitrate can cause such symptoms.

Infant methemoglobinemia, a disease characterized by certain specific blood changes and cyanosis, may be caused by high nitrate concentrations in the water used for preparing feeding formulae. While it is still impossible to state precise concentration limits, it has been widely recommended that water containing more than 10 mg/l of nitrate nitrogen (NO_3-N) should not be used for infants. Nitrates are also harmful in fermentation processes and can cause disagreeable tastes in beer. In most natural water the pH range is such that ammonium ions (NH_4^+) predominate. In alkaline waters, however, high concentrations of un-ionized ammonia in undissociated ammonium hydroxide increase the toxicity of ammonia solutions. In streams polluted with sewage, up to one half of the nitrogen in the sewage may be in the form of free ammonia, and sewage may carry up to 35 mg/l of total nitrogen. It has been shown that at a level of 1.0 mg/l un-ionized ammonia the ability of hemoglobin to combine with oxygen is impaired and fish may suffocate. Evidence indicates that ammonia exerts a considerable toxic effect on all aquatic life within a range of less than 1.0 mg/l to 25 mg/l, depending on the pH and dissolved oxygen level present.

Ammonia can add to the problem of eutrophication by supplying nitrogen through its breakdown products. Some lakes in warmer climates, and others that are aging quickly, are sometimes limited by the nitrogen available. Any increase will speed up the plant growth and decay process.

pH, Acidity and Alkalinity

Acidity and alkalinity are reciprocal terms. Acidity is produced by substances that yield hydrogen ions upon hydrolysis, and alkalinity is produced by substances that yield hydroxyl ions. The terms "total acidity" and "total alkalinity" are often used to express the buffering capacity of a solution. Acidity in natural waters is caused by carbon dioxide, mineral acids, weakly dissociated acids, and the salts of strong acids and weak bases. Alkalinity is caused by strong bases and the salts of strong alkalies and weak acids.

The term pH is a logarithmic expression of the concentration of hydrogen ions. At a pH of 7, the hydrogen and hydroxyl ion concentrations are essentially equal and the water is neutral. Lower pH values indicate acidity while higher values indicate alkalinity. The relationship between pH and acidity or alkalinity is not necessarily linear or direct.

Waters with a pH below 6.0 are corrosive to water works structures, distribution lines, and household plumbing fixtures and can thus add such constituents to drinking water as iron, copper, zinc, cadmium and lead. The hydrogen ion concentration can affect the taste of the water. At a low pH water tastes sour. The bactericidal effect of chlorine is weakened as the pH increases, and it is advantageous to keep the pH close to 7. This is very significant for providing safe drinking water.

Extremes of pH or rapid pH changes can exert stress conditions or kill aquatic life outright. Dead fish, associated algal blooms, and foul stenches are esthetic liabilities of any waterway. Even moderate changes from "acceptable" criteria limits of pH are deleterious to some species. The relative toxicity to aquatic life of many materials is increased by changes in the water pH. Metalocyanide complexes can increase a thousand-fold in toxicity with a drop of 1.5 pH units. The availability of many nutrient substances varies with the alkalinity and acidity. Ammonia is more lethal with a higher pH.

The lacrimal fluid of the human eye has a pH of approximately 7.0, and a deviation of 0.1 pH unit from the norm may result in eye irritation for the swimmer. Appreciable irritation will cause severe pain.

Color

Color can impart aesthetically unpleasant characteristics to water. Color can also filter light, reducing light penetration and impairing the photosynthetic activity of aquatic plants.

Temperature

Temperature is one of the most important and influential water quality characteristics. Temperature determines those species that may be present; it activates the hatching of young, regulates their activity, and stimulates or suppresses their growth and development; it attracts, and may kill when the water becomes too hot or becomes chilled too suddenly. Colder water generally suppresses development; warmer water generally accelerates activity and may be a primary cause of aquatic plant nuisances when other environmental factors are suitable.

Temperature is a prime regulator of natural processes within the water environment. It governs physiological functions in organisms and, acting directly or indirectly in combination with other water quality constituents, it affects aquatic life with each change. These effects include chemical reaction rates, enzymatic functions, molecular movements, and molecular exchanges between membranes within and between the physiological systems and the organs of an animal.

Chemical reaction rates vary with temperature and generally increase as the temperature is increased. The solubility of gases in water varies with temperature. Dissolved oxygen is decreased by the decay or decomposition of dissolved organic substances, and the decay rate increases as the temperature of the water increases, reaching a maximum at about 30°C (86°F). The temperature of stream water, even during summer, is below the optimum for pollution-associated bacteria. Increasing the water temperature increases the bacterial multiplication rate when the environment is favorable and the food supply is abundant.

Reproduction cycles may be changed significantly by increased temperature because this function takes place under restricted temperature ranges. Spawning may not occur at all because temperatures are too high. Thus, a fish population may exist in a heated area only by continued immigration. Disregarding the decreased reproductive potential, water temperatures need not reach lethal levels to decimate a species. Temperatures that favor competitors, predators, parasites, and disease can destroy a species at levels far below those that are lethal.

Fish fccd organisms are altered severely when temperatures approach or exceed 90°F. Predominant algal species change, primary production is decreased, and bottom associated organisms may be depleted or altered drastically in numbers and distribution. Increased water temperatures may cause aquatic plant nuisances when other environmental factors are favorable.

Synergistic actions of pollutants are more severe at higher water temperatures. Given amounts of domestic sewage, refinery wastes, oils, tars, insecticides, detergents, and fertilizers more rapidly deplete oxygen in water at higher temperatures, and the respective toxicities are likewise increased.

When water temperatures increase, the predominant algal species may change from diatoms to green algae, and finally at high temperatures to blue-green algae, because of species temperature preferentials. Blue-green algae can cause serious odor problems. The number and distribution of benthic organisms decrease as water temperatures increase above 90°F, which is close to the tolerance limit for the population. This could seriously affect certain fish that depend on benthinc organisms as a food source.

The cost of fish being attracted to heated water in winter months may be considerable, due to fish mortalities that may result when the fish return to the cooler water.

Rising temperatures stimulate the decomposition of sludge, formation of sludge gas, multiplication of saprophytic bacteria and fungi (particularly in the presence of organic wastes), and the consumption of oxygen by putrefactive processes, thus affecting the an esthetic value of a watercourse.

In general, marine water temperatures do not change as rapidly or range as widely as those of freshwaters. Marine and estuarine fishes, therefore, are less tolerant of temperature variation. Although this limited tolerance is greater in estuarine than in open water marine species, temperature changes are more important to those fishes in estuaries and bays than to those in open marine areas because of the nursery and replenishment functions of the estuary that can be adversely affected by extreme temperature changes.

In establishing limits only certain primary parameters have been chosen:

Phenols
BOD_5
COD
Total Suspended Nonfilterable Solids
pH

The parameters turbidity and specific conductance were not chosen because they represent alternate methods of estimating suspended solids and dissolved solids respectively.

The parameters oil and grease and ammonia will receive adequate treatment if the limitations for the primary parameters are met.

Color is not a primary pollutant, because the only company which has stated a need to discharge does not use dyes in the manufacturing process. Color due only to the resin will be adequately removed in conjunction with treatment of the primary parameters.

Insufficient data exist to establish limitations for dissolved solids and temperature.

The principal source of waste heat will be noncontact cooling water. Regulations governing control of temperature in noncontact cooling water will be promulgated at a future date.

SECTION VII
CONTROL AND TREATMENT TECHNOLOGY

Historical Treatment

In only one insulation fiberglass plant has secondary or more advanced treatment been applied to an effluent. Historically plants have discharged their waste streams to publicly owned treatment works. Use of biological end-of-pipe treatment for phenolic waste waters was attempted at Plant A. The treatment scheme (Figure VII) consisted of equalization, alum coagulation, nutrient addition, temperature control, extended aeration, post chlorination, aerobic sludge digestion, and vacuum filtration. It is noteworthy that the recirculation of chain wash waters was practiced thirteen years ago at this plant and that only blowdown from this recycled water received biological treatment. Table XIII summarizes the performance of the system. Despite the percent removal efficiencies of the treatment system, objectionable concentrations of phenol and COD were still discharged. In addition the parameter of color caused by a dye received no treatment other than dilution. The company researched use of activated carbon absorption in an effort to remove the dye and the remaining phenol and COD in the effluent. This approach, however, proved more costly than total recycle of process waters.

Phenol and organic treatment is commonly practiced in other industrial categories. One coke plant has a raw waste containing 410 mg/l of phenols at a flow rate of 1,820,000 l/day (480,000 gal/day). The treatment system consists of a 980,000 l (260,000 gal) activated sludge unit employing surface aerators and a clarifier. Sludge from the clarifier is returned to the activated sludge unit at a rate of 1,110,000 l/day (294,000 gal/day). This treatment plant was able to obtain the following concentrations:

Effluent Concentration mg/l	Percent of Time Met
1.0	99.5
0.5	99
0.12	90
0.066	75
0.038	50

The only pollutant that may interfere with a biological publicly owned treatment works is phenol. Only certain strains of microorganisms effectively remove phenols from waste waters and their effectiveness is confined to specific concentration ranges. Therefore, if sufficient dilution water is not present, wide variations of phenol in the raw waste load due to process changes may adversely affect the populations of these organisms.

State of the Art Treatment Technology

The industry has long realized that recirculation of chain wash water is feasible and that a blowdown is necessary to control the buildup of

FIGURE VII

BIOLOGICAL TREATMENT AT PLANT A

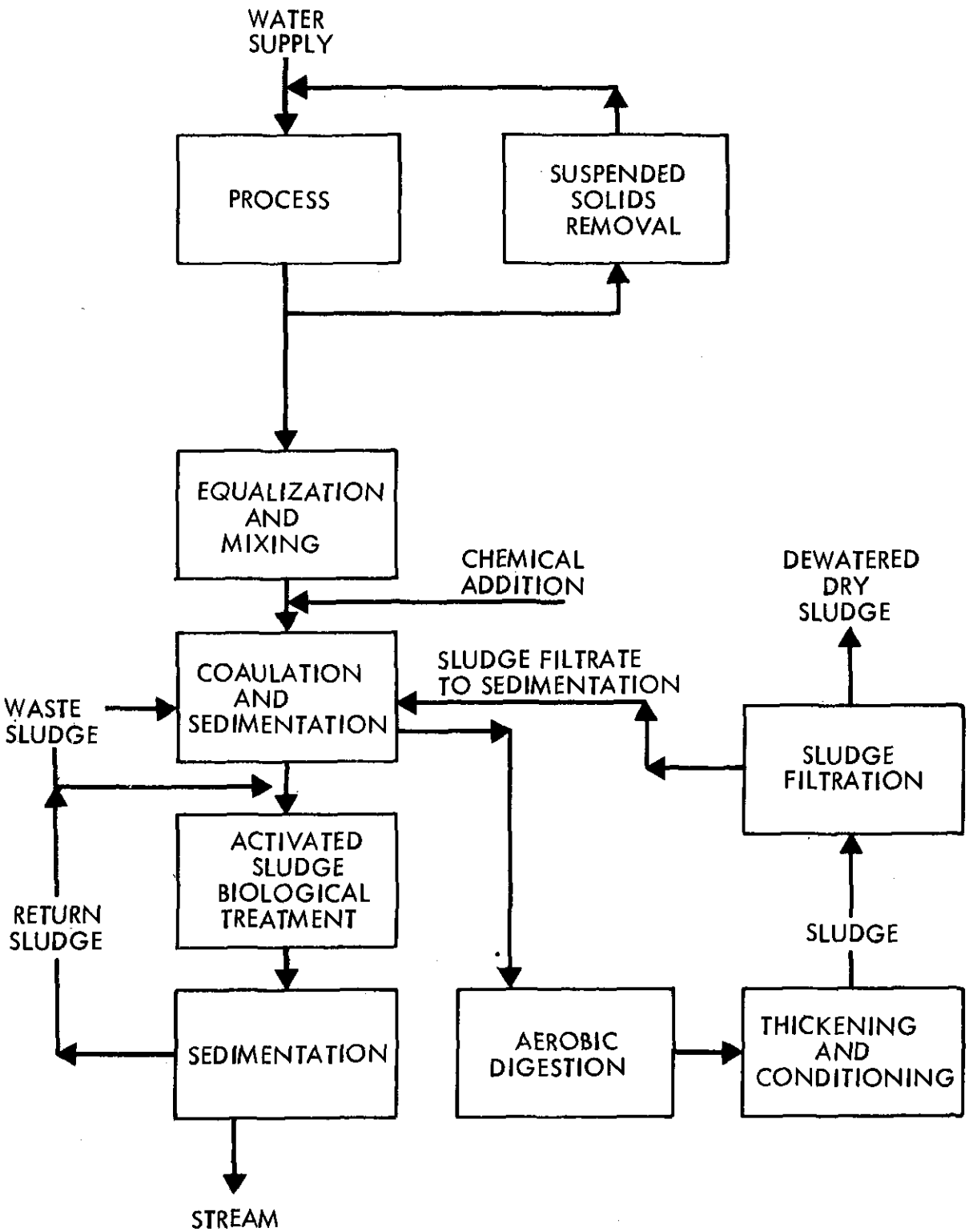

Table XIII

Biological Treatment System
at
Plant A

Parameter	Mean Raw Waste mg/l	Mean Final Effluent mg/l	Mean Percent Removal	Standard Deviation mg/l
Phenol	199	0.8	99.6	0.46
Suspended Solids	761	21.4	97.2	8.8
COD	6532	269	95.9	74.7
BOD_5	998	15.2	98.5	10.6

Flow was 0.57 million liters per day (0.15 million gallons per day)

EQUIPMENT

Unit	No. of Units	Design Flow GPM	Capacity gal./unit	Total Detention Time	Over Flow Rate gal/sq. ft./day
Equalization	3	104	48,500	23.25 hr.	-
Chemical Mixing	1	104	540	0.09 hr.	-
Flocculation	1	104	2,870	0.46 hr.	-
Clarification	1	104	42,250	6.76 hr.	210
Aeration	2	203[1]	113,500	18.20 hr.	-
Secondary Clarification	2	104	7,450	2.40 hr.	490
Chlorine Contact	1	104	3,000	0.48 hr.	-
Aerobic Digestion	1	9	113,500	17.4 days	-
(Sludge Thickener)	1	11.1	28,500	-	42.3

Vacuum Filter

Drum Area 110 sq. ft.
Solids Loading Rate 1.25 lbs/sq. ft./hr

Aerators	Conditions	Unit Transfer Rate
Aeration	C_s = 0.85 H_2O C_L = 2.0 mg/l T = 30°C L = 0.5	125 lbs O_2/hr
Digestion	C_s = 0.85 H_2O C_L = 1.0 mg/l T = 30°C L = 0.5	6.25 lbs O_2/hr

[1]includes 95 percent return sludge

solids in the system. The industry also recognizes that suitable treatment of the blowdown for reuse as overspray or binder dilution water is less costly than performing advanced treatment to a final effluent. In the total recirculation scheme the contaminants in the blowdown essentially go onto the product as the binder, and overspray waters evaporate from the hot fiberglass. There has been no noticeable affect on product quality due to the small addition of these extra solids on the fiberglass. As an alternate method of blowdown disposal, some plants, because of favorable climatic conditions and space availability, have employed evaporation ponds.

The amount of water necessary to effectively clean the chain can be reduced by use of increased water pressures. However, sufficient concentrations of suspended and dissolved solids can in turn limit this pressure due to problems of increased pump maintenance and spray nozzle clogging. Since the dissolved solids concentration in the chain wash system is determined by the blowdown rate and degree of resin polymerization, it is the more difficult of the two parameters to control. The need to eliminate waste streams other than chain wash water by use as overspray or binder dilution will limit the blowdown rate of the recirculation chain wash system. This in turn will effect a steady state concentration of solids in the system, which limits the wash water pressure.

The above methods constitute the current "state of the art treatment technology" employed by the industry. Table XIV lists the water pollution abatement status of all existing primary plants. In summary, the table shows that 3 plants completely recycle all process waters. Another does the same except for cullet cooling water. Four plants recycle with three blowing-down to evaporation ponds and the fourth to a spray field. Four plants recycle and discharge blowdown to publicly owned treatment works. Five discharge once-through waters to such works. Six plants have plans for complete recirculation of process or all wastes streams.

All three insulation fiberglass producers operate plants in which process water is recirculated and in which blowdown is used as overspray or binder dilution. Thus the entire industry has the technology to apply the "state of the art treatment technology."

Detailed descriptions of those plants that are currently practicing this technology follow. The plants described cover the entire range of types of plants: new and old; small, medium and large; flame attenuation and rotary spinning processes. The examples also illustrate how air pollution abatement methods can affect the water system.

It should be noted that technology transfer of specific items between plants is not always possible. This is especially true when comparing rotary and flame attenuation processes, which have widely different glass, binder, and air flow rates. This does not affect the conclusions that total process water recycle is practicable for all plants.

TABLE XIV

WATER POLLUTION ABATEMENT STATUS OF EXISTING PRIMARY INSULATION FIBERGLASS PLANTS

Plant	Status
A	Complete recirculation of process waters. Some indirect cooling water from an experimental air emissions control device discharged to stream
B	Complete recirculation
C	Discharge once-through waters to POTW.[1] Plans for recirculation
D	Complete recirculation except for discharge of cullet cooling water
E	Complete recirculation of phenolic wastes by 5-1-73. Other wastes to POTW
F	Complete recirculation
G	Completely recycle phenolic waters. Caustics and other waters to POTW
H	Recycle with blowdown to POTW, cooling waters to river. Plans for complete recirculation
I	Discharge once-through waters to POTW. Recycles cullet water. Plans for complete recirculation
J	Recycle on 1 line. Other lines discharge to river
K	Recycle with blowdown to evaporation pond
L	Evaporate wastes in pond
M	Discharge once-through water to POTW. Plans for recirculation
N	Wastes used for spray irrigation
O	Discharge to POTW
P	Recycle with blowdown to evaporation seepage ponds
Q	Discharge once-through waters to POTW. Plans for recirculation
R	Discharge one-through waters to POTW. Plans for recirculation
S	Recycle with blowdown to POTW

[1] POTW - Publicly Owned Treatment Works

Plant A

This plant was built in 1956 and currently has a production capacity of 120,000 metric tons (270 million pounds) per year. Four rotary lines are fed by direct melt, gas fueled furnaces. Flight conveyors are used in the forming area. The plant produces standard building insulation, acoustical ceiling board, pipe insulation, and blowing wool.

Efforts to close the water system have been undertaken for the past thirteen years. The plant has been operating a complete closed circuit process water loop for the past three years, but is continuing to research more effective and economic ways of internally treating the waste waters for reuse. Figure VIII depicts the present system.

The company considers the crucial point in this water system to be the huge amounts of heated air which when drawn through the forming area become saturated with water from the chain wash and air scrubber system. The plant has a 1.5 percent blowdown of dirty water, which stabilizes the total solids concentration within the system to between one and two percent. Phenol concentrations range between 200 and 500 mg/l within the system.

The plant is currently operating stationary chain sprays at 21 atm (294 psig) absolute pressure using recycled water. Clean water is used at between 135 and 204 atm (2000 to 3000 psig) when the resin buildup is particularly bad. This flow is estimated to average 0.6 l/sec (10 gpm) and to occur over a period of 10 minutes each shift. The dirty water sprays use 19 l/sec (300 gpm) per machine. This plant operates its water systems at a higher total solids concentration than other plants and must therefore use less powerful pumps in order to protect them from severly erosive conditons.

As seen from Figure VIII, the system consists of directly recycling screened chain wash water, periodic blowdown for binder dilution water, and chemical treatment of additional blowdown before being returned to the recycle water system. Since a very low percentage blowdown exists, the plant must thoroughly treat a large portion of the process water before recycling it. The company originally employed flocculation and clarification to remove dissolved organics and suspended solids, but has recently discontinued flocculation without harmful effects to the manufacturing process. Sludge from the treatment systems is landfilled.

The company considers the use of recycle water as overspray to be neither practicable nor desirable from an air emissions standpoint. The probable reason is the relatively high concentration of contaminants in the recycle water when compared to those plants that do recycle water as overspray.

FIGURE VIII

WATER FLOW DIAGRAM OF PLANT A

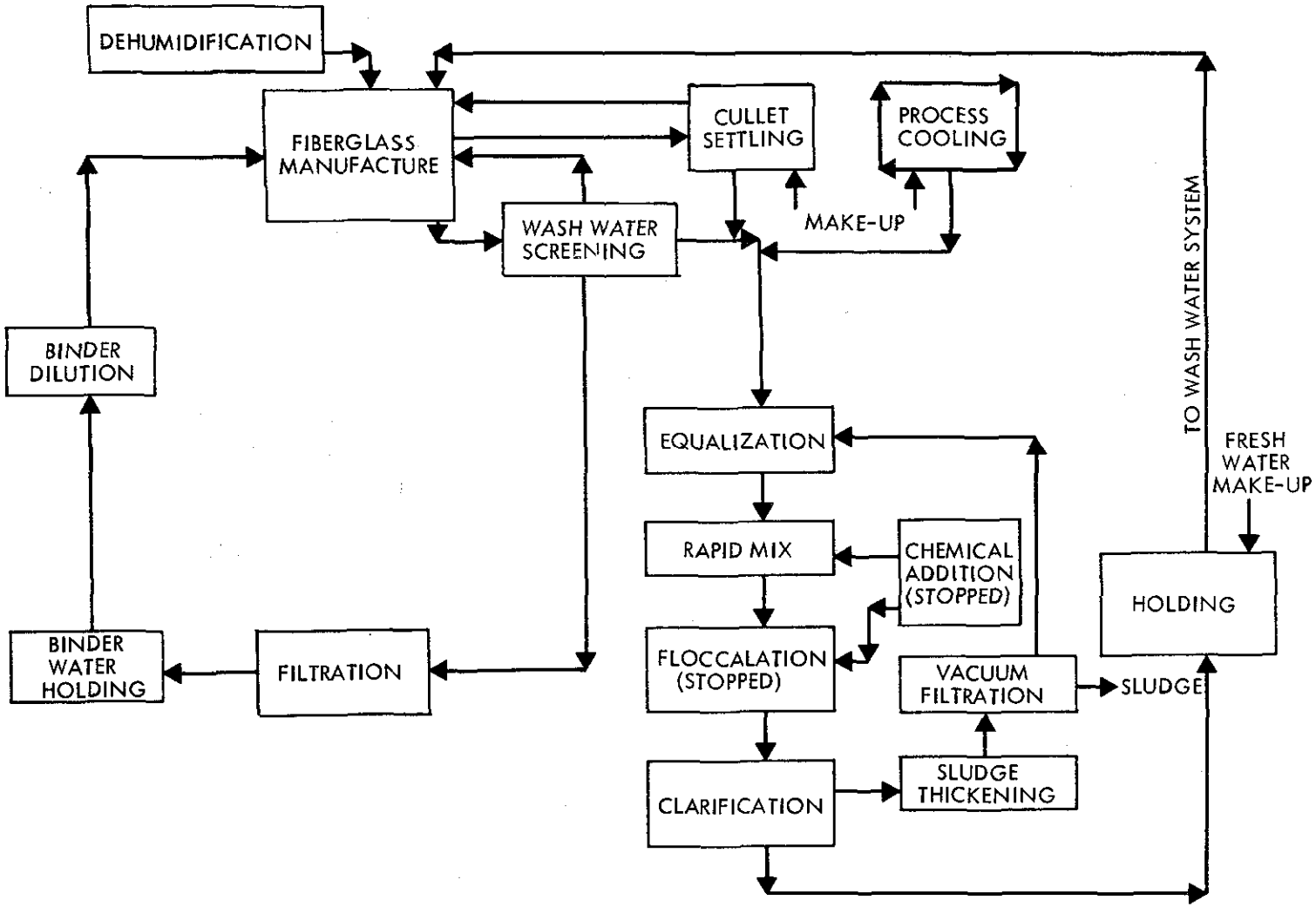

Like the rest of the industry this plant is dissatisfied with the performance and maintenance requirements of diatomaceous earth filters and is investigating alternate treatment methods such as paper filters and cyclones.

A considerable amount of cullet is produced. The cullet quench water system is a separate recirculation system with blowdown to the flocculation treatment system. The indirect furnace cooling water system is also closed. Blowdown from this system goes to the flocculation system. Chromates were used in the cooling waters for corrosion control but are retained in the closed water system. The company is changing to zinc organics.

Caustic mandrel cleaning for the pipe insulation manufacturing process is performed at this plant. However, the volume of caustic blowdown is small and they can be put into the wash water recirculation system without causing noticeable problems.

Air has replaced steam in the forming process, thus reducing the demand for softened waters. The only water required for air attenuation is for indirect cooling of the air compressors.

The majority of water used in the plant is for particulate air pollution control of the forming air. This water is also used as chain wash water. The company is therefore concerned that future regulations which may require changes in air pollution control equipment will affect the wash water system.

A pilot dehumidification system is used on the forming air of one line to control odor. Contact cooling water is recycled, with the blowdown going to the chain wash water system. Blowdown of noncontact cooling water from the dehumidification system is discharged to a small stream behind the plant. At present this is the only plant in the industry employing a dehumidification system.

One of the more effective techniques to curb odor problems at this plant has been to change binder compositions to inhibit phenol volatilization in the hot forming area. Whenever this is done the wash water quality must be reevaluated to insure its compatability with the new binder. The company expressed concern that future air pollution abatement requirements will further complicate the wash water system, but at this time they see no reasons why the system cannot remain a total recirculation system.

No treatment problems due to start-up or shutdown can be foreseen at this plant. This does not preclude the possibility of temporary plant shutdown due to process upsets or treatment system problems.

Plant B

This plant best represents how a new plant can avoid air and water treatment problems through proper design before the plant is built. The plant was completed in June of 1971 and with only two lines has a capacity of 34,800 metric tons (75 million pounds) per year. The plant employs rotary spinners that are fed by cold, top-feed electric melt furnaces. This technique has the advantage of virtually eliminating the air emissions encountered by conventional gas fired furnaces. The cost of electricity is three times that of gas. The total costs, however, are about the same since the electrodes are positioned at the bottom of the furnace and require but one-third the energy to melt the same amount of raw materials. Gas fired furnaces have their burners less efficiently positioned in the furnace walls. Only standard building insulation is produced at this plant.

Figure IX is a schematic diagram of the plant's operations, and Figure X is a detailed water flow diagram. As it can be seen, the process is virtually identical to that at Plant A. However flocculation, using Benonite clay and a polymer, and diatomite filtration are still employed, and since the air and water treatment systems operate both efficiently and economically there are no plans to alter the system. As long as the total solids concentration can be held below two percent, the recycle system will function properly.

Sufficient land was acquired to build a retention pond which is used to collect contaminated storm water. The pond can also be used to contain furnace cooling water and cullet cooling water in the event of process upsets and shutdowns.

FIGURE IX

SCHEMATIC DIAGRAM OF PLANT B

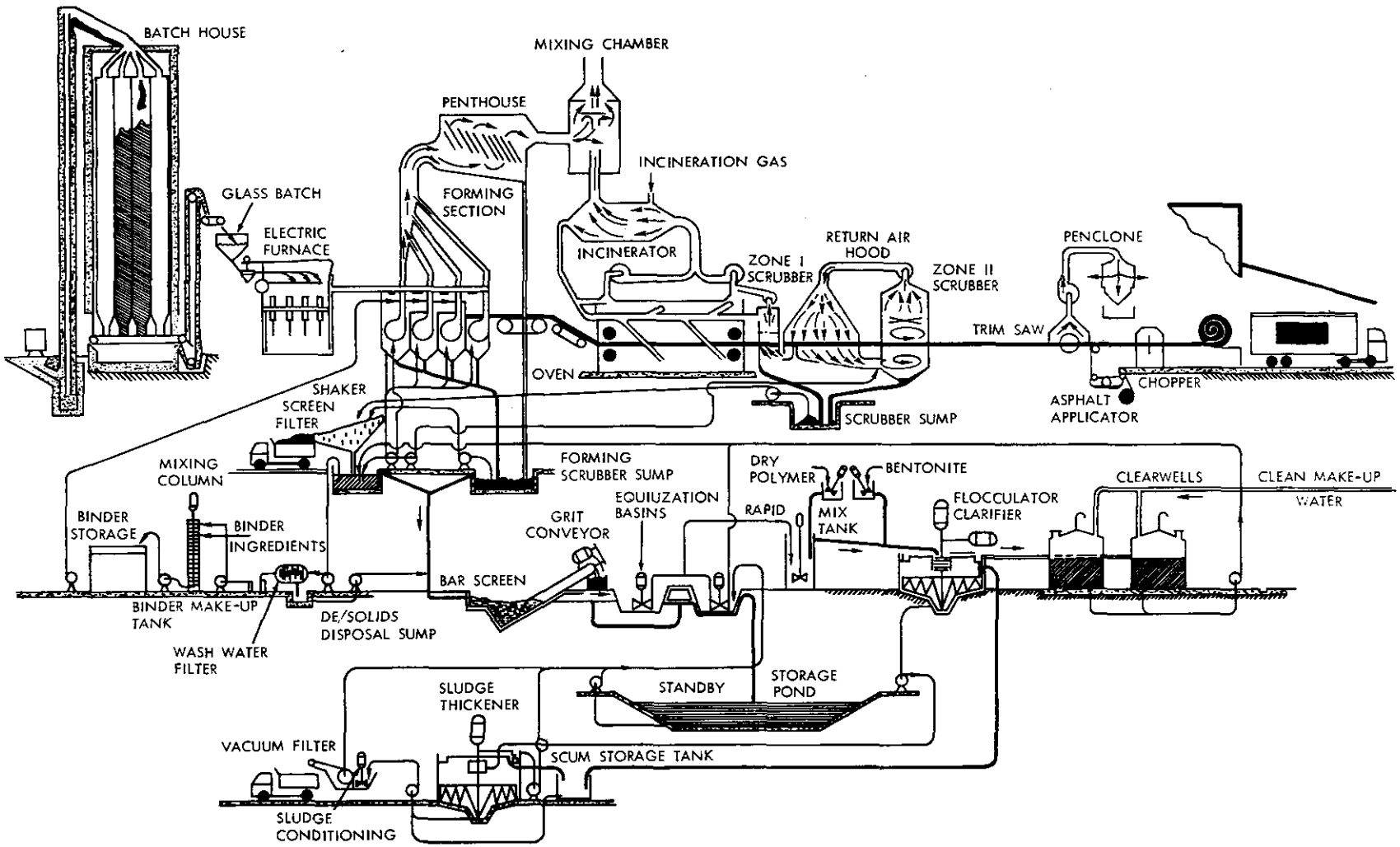

FIGURE X

WATER FLOW DIAGRAM OF PLANT B

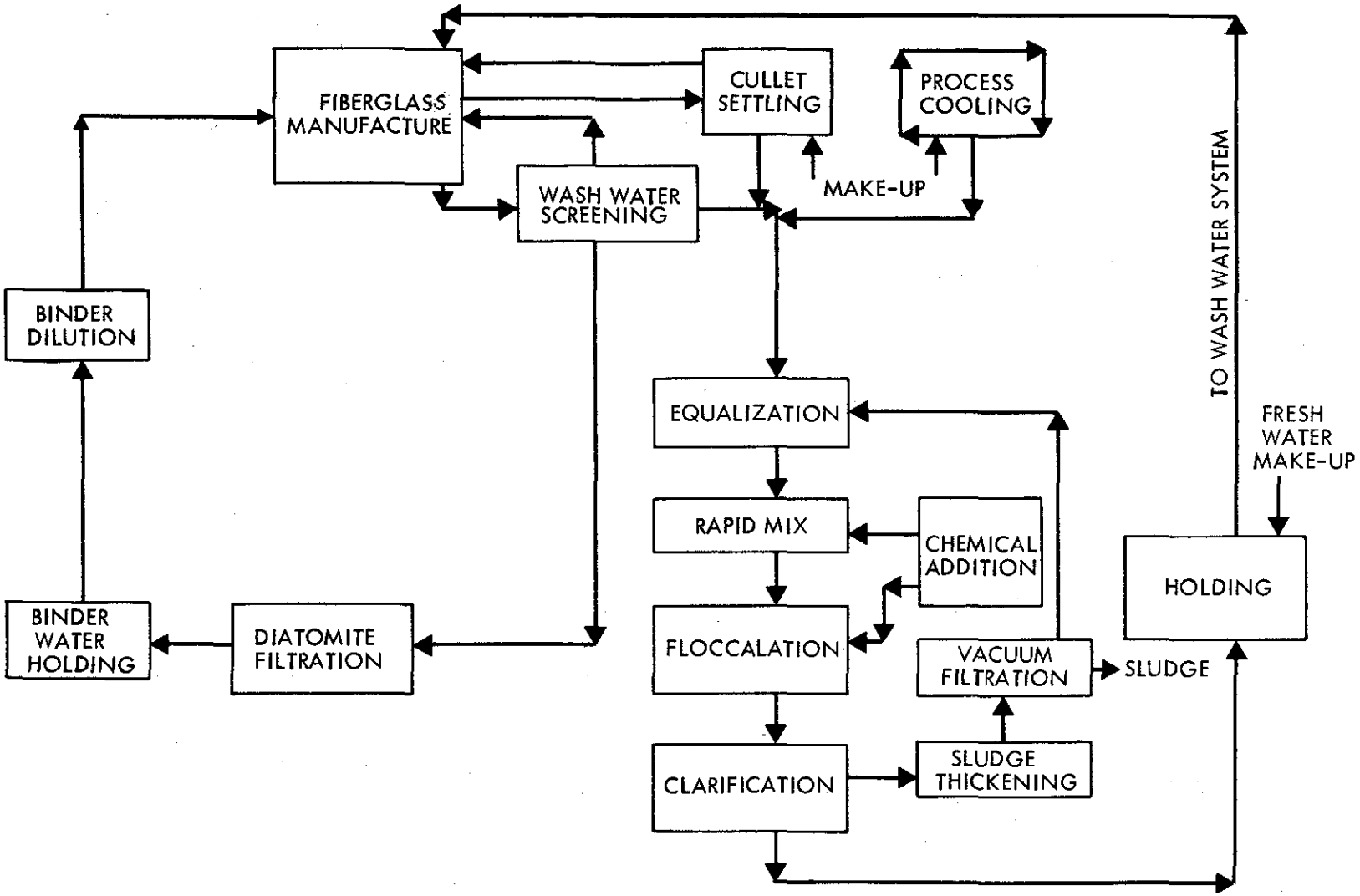

Plant D

This plant is currently experiencing the most difficult problems within the industry in maintaining a completely closed cycle water system, and consequently serves as an example that with even minimal internal waste water treatment a closed water loop can be operated. In 1965 the plant was bought from a company which also produced fiberglass. The structure was built in 1961. In September 1970 the company was given a cease and desist order by the State Water Pollution Control Board and since that time has operated the system shown in Figure XI. The plant is medium sized (32,000 metric tons per year) and produces only standard building insulation. There are two lines employing rotary spinners and direct melt, gas fueled furnaces.

At the heart of the treatment system there are two 25,000 liter (6,500 gallon) sumps, one for each line. The wash water passes through 40 mesh screens and receives approximately five minutes retention in the sumps before the water is again used to clean the flight conveyor. A pressure of 7 atm (87 psig) is used to clean the flight conveyors.

A small amount of water is pumped from the sumps to two 38,000 liter (10,000 gallon) tanks for additional settling. Sludge is then pumped to a 19,000 liter (5,000 gallon) tank to hold until it is hauled away to a landfill. The plant is able to keep the total solids in as little control that exists by blowing down 98,000 and 57,000 liters (26,000 and 15,000 gallons) per day respectively as overspray and binder dilution water respectively.

Because the preliminary screening is inadequate and the water in the sump is constantly stirred up due to the short retention time, quite a bit of foaming occurs. So much foaming occurs that a half resin, half fiber, mass eventually floats and hardens to a depth of about two feet, necessitating "digging out" the sumps once a week. While this is being done, both lines must be shut down for 10 to 12 hours. In addition the flight conveyors must also be blasted with crushed walnut shells to free them of polymerized resin. Walnut shells are used to minimize chain wear. Despite the lost time in production and high maintenance costs, the plant is still able to make some profit.

By the autumn of 1973 automatic, chain driven scrappers will be installed in both sumps and the existing screens will be repositioned for easier access to the sumps. In addition a portion of the recycled water will be treated by flocculation much like plants A and B. It is not known at this time what percentage of the recycled water flow will be so treated, and it is conceivable that this will be as high as 100 percent. The plant expects to profit from the installation of the treatment facilities, since increased production will offset the cost of the waste treatment.

FIGURE XI

WATER FLOW DIAGRAM OF

PLANT D

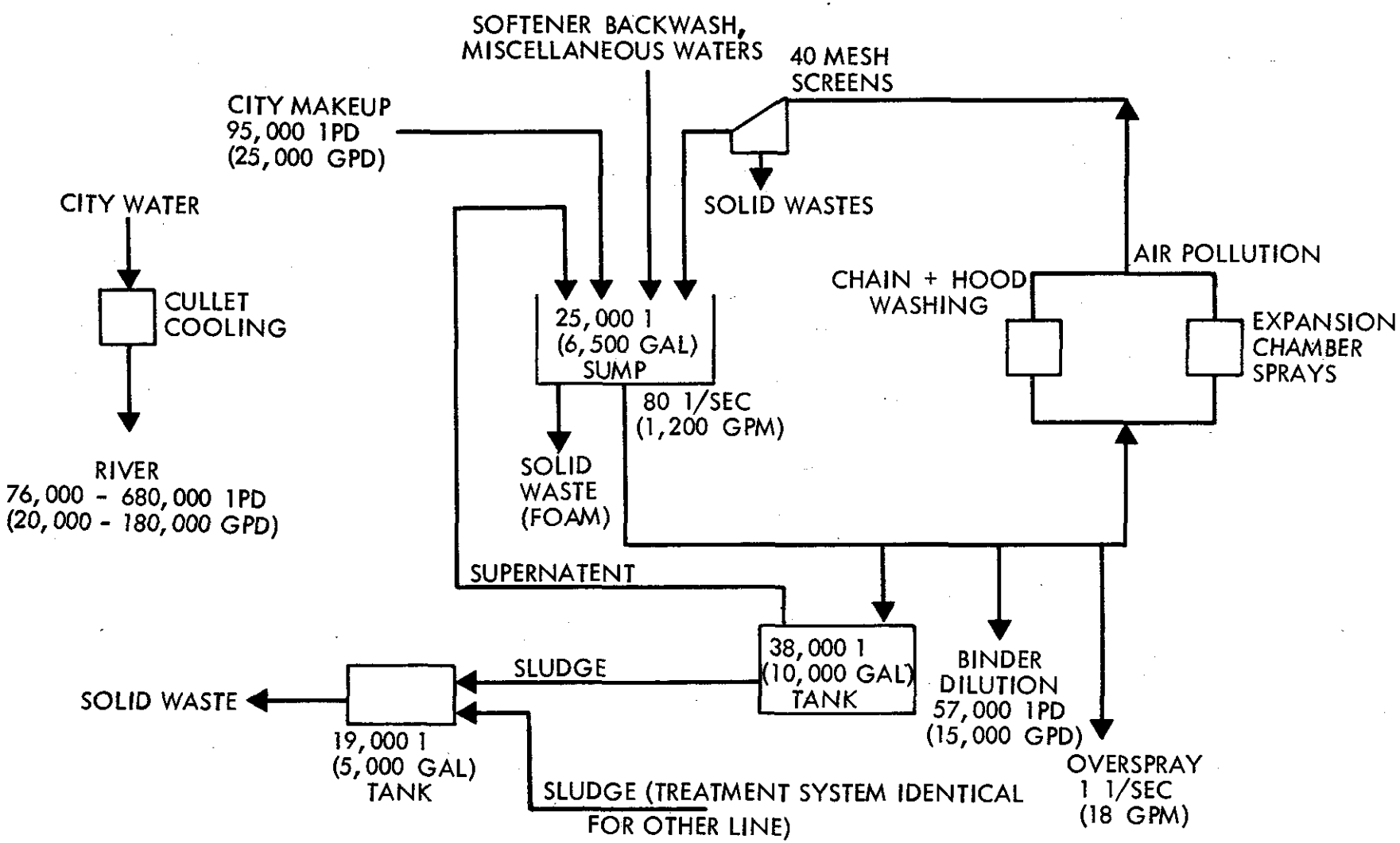

Because the recycled water currently has a total solids concentration of 4 percent (90 percent of which is dissolved organics), the wet scrubbers employing recycled water are ineffective. Like other plants, it is estimated that the total solids should be less than two percent in order to keep these water and air systems in control.

Except for cullet cooling water all waste waters are sent to the sumps. The former is discharged to a stream without adequate treatment.

Since the plant has gone to total recycle, trout have reportedly reappeared downstream. A successful fish farm reportedly is also operating downstream of the plant.

Plant E

This plant is medium sized having a capacity of 18,200 metric tons (41 million pounds) per year. There are four flame attenuated lines, one rotary spun line, and one line which uses textile fiberglass wastes as a raw material. Standard building insulation is produced by five primary lines that are fed by gas fueled, direct melt furnaces. The plant was purchased in 1952, but the original structure is considerably older.

The water flow diagram for this plant appears as Figure XII. As seen, the recycle technique differs considerably from that employed at Plants A and B. Except for the blowdown treatment system, the recirculation system has been successfully in operation since May 1972.

Wire mesh chains are used in the forming area of the flame attenuated lines. The plant employs a combination of both hot caustic washing and spray washing of the wire mesh chains at 14 atm (190 psig) (refer to Figure XIII). The only blowdown from the caustic bath occurs as carry-over water on the chain which is then washed by the spray wash water system. Attempts to get away from using caustic have not succeeded so far, but the amount of caustic entering the system does not interfere with the binder because of the sizable dilution of wash water. The rotary spinning line employs a flight conveyor cleaned only by a rotating water spray. The waste textile line is a dry process.

Although drop out boxes are used with water sprays for the exiting forming air, considerably less water is used than for plants A and B. Sufficient suspended solids are removed by the Hydrasieves and sufficient blowdown occurs so that this plant does not need to treat the recycled water by flocculation and coagulation as do Plants A and B.

The blowdown treatment system consists of pH adjustment, coagulation, settling and vacuum filtration. The treated water is then used as resin dilution water. The company is presently having some difficulties in recycling this blowdown since it is affecting the curing properties of the resin. Two possible sources of this problem are the caustic and the acid used in the coagulation step.

Sludge and backwash from lime softening, cooling tower blowdown and boiler blowdown are directed to a lagoon for settling. Overflow is neutralized with sulfuric acid and discharged to a municipal sanitary sewer. Cullet cooling water is directed to the same lagoon and is discharged to a sanitary sewer.

FIGURE XII

WATER FLOW DIAGRAM OF

PLANT E

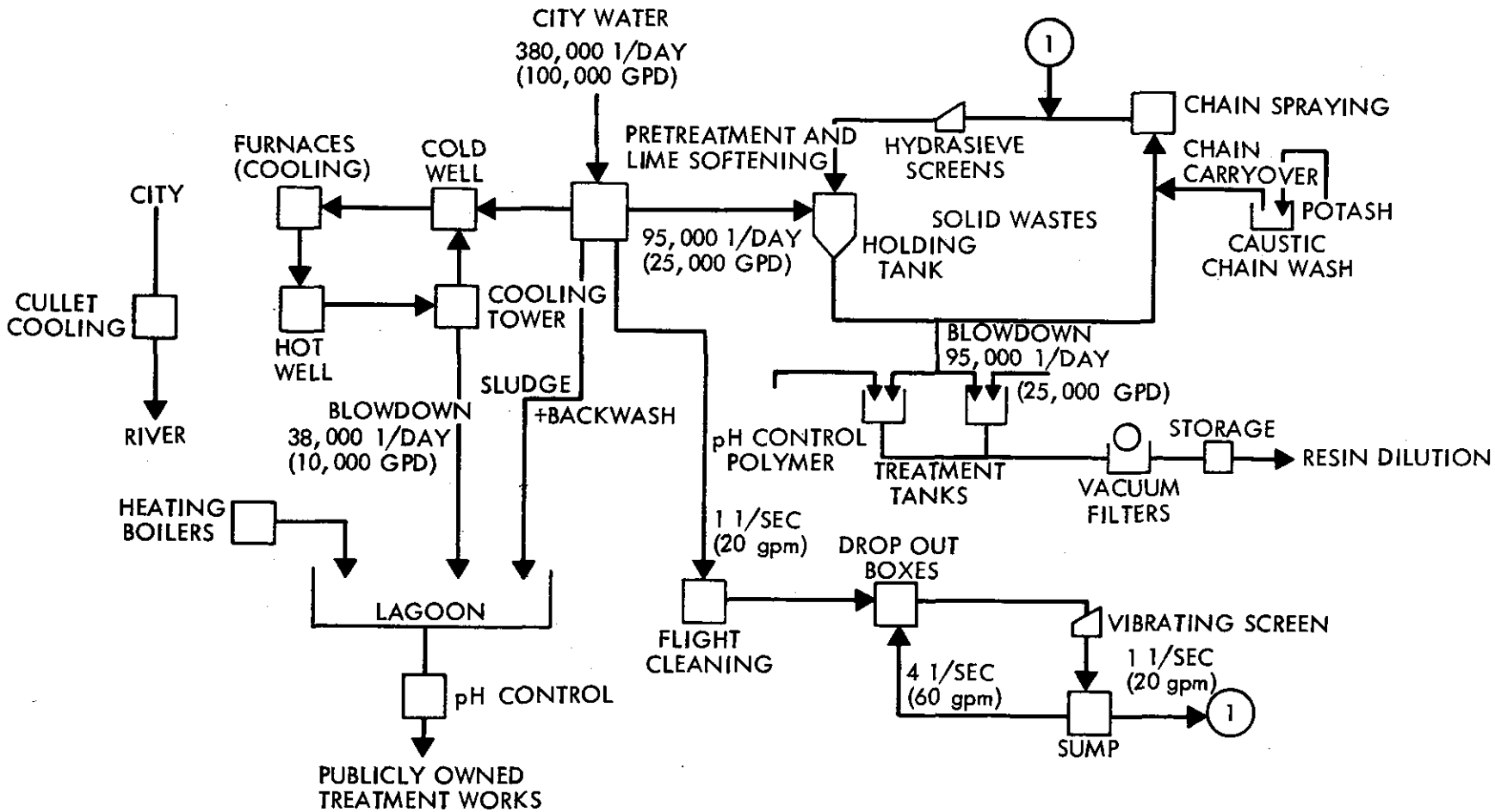

FIGURE XIII

CHAIN CLEANING AT PLANT E

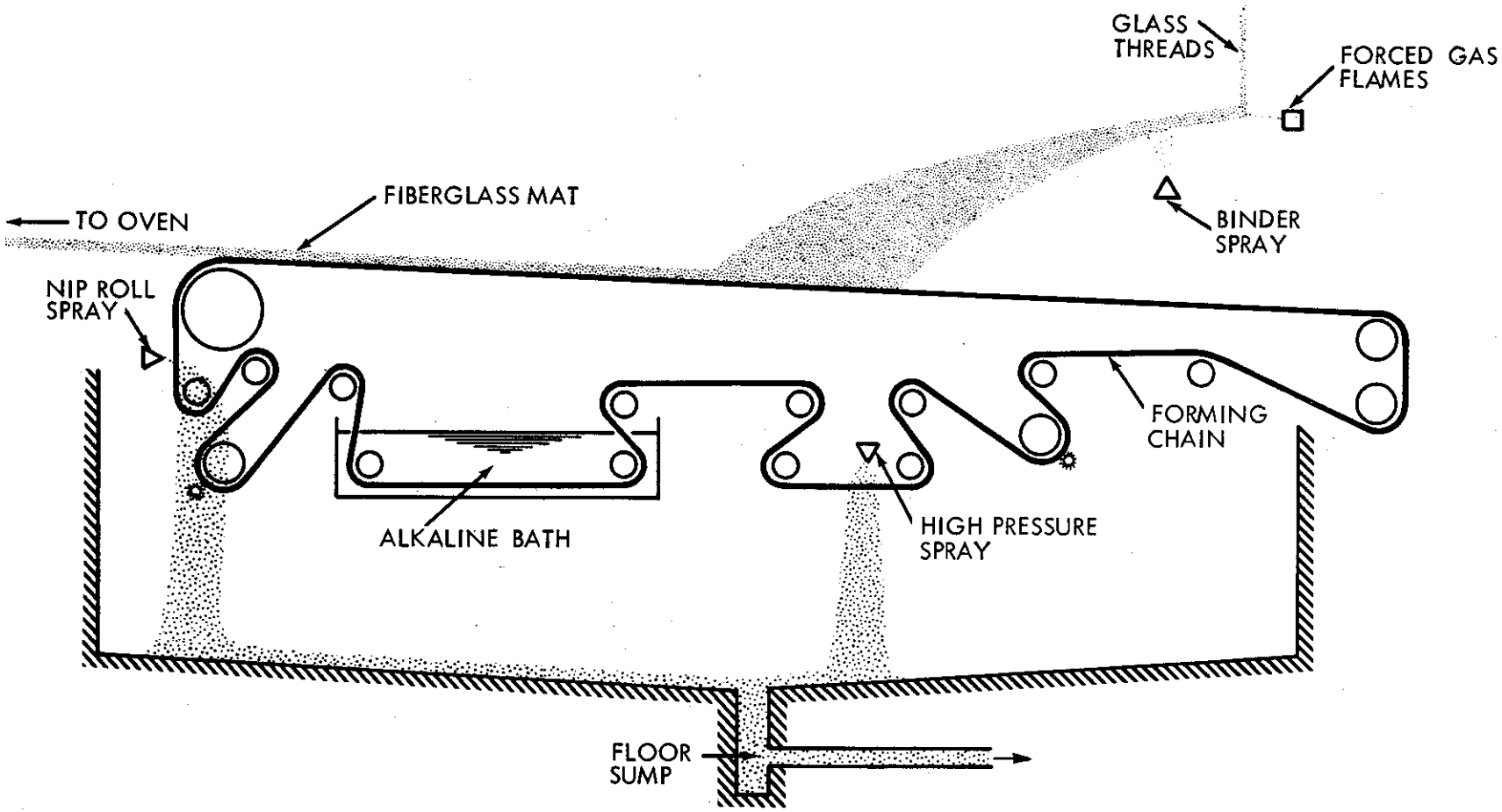

Plant F

This plant best illustrates how with minimization of water usage, most problems of the general recirculation model can be avoided. The plant was built in 1969 with two standard insulation lines employing marble fed, flame attenuation processes. The addition of two similar lines in 1972 has boosted the plant from small to medium size. Current production is 15,900 metric tons (35 million pounds) per year. Since the plant was built, it has successfully maintained the total recycle system depicted in Figure XIV.

The principal reason for the reliability of the system is that approximately 8 percent of the process water flow is continually blown down. This condition is able to be attained by use of low volume, 69 atm (1000 psig), rotating, and chain (wire mesh) water sprays. The only other water use within the system is to flush out the dirty water pit. The blowdown, 2 l/sec (30 gpm), is consumed in the process as overspray.

In order to protect the pumps and spray nozzles, suspended solids are removed from the recycled water by vibrating screens, diatomaceous earth filters, and fiberglass filters operated in series. With the combination of water treatment and high blowdown rate, the total solids concentration ranges between 0.3 and 0.5 percent. This then allows high pressure pumps to be used, which in turn minimizes water use and makes the system possible. The addition of anhydrous ammonia aids the filters in that the ammonia inhibits polymerization of the phenols and thereby keeps the filters free. Although this practice will raise the dissolved solids concentration, this problem is adequately handled by the high blowdown percentage. Even though it is used in the binder, additional ammonia is automatically added to the recycled water to obtain an optimum pH of about 9.0.

The plant also minimizes water use by using dry air pollution control equipment. Drop out boxes (without water sprays) are used for the exiting forming air. High energy fiberglass filters are used for the curing oven gases.

Maintenance of the diatomaceous earth (Per) filters has proved to be a major cost of the system, and the company is researching alternate treatment schemes that need less attention. Flocculation is so far the most promising technique.

Cooling tower blowdown is bled into the recycle system. No water softening is required at this plant.

FIGURE XIV

WATER FLOW DIAGRAM OF

PLANT F

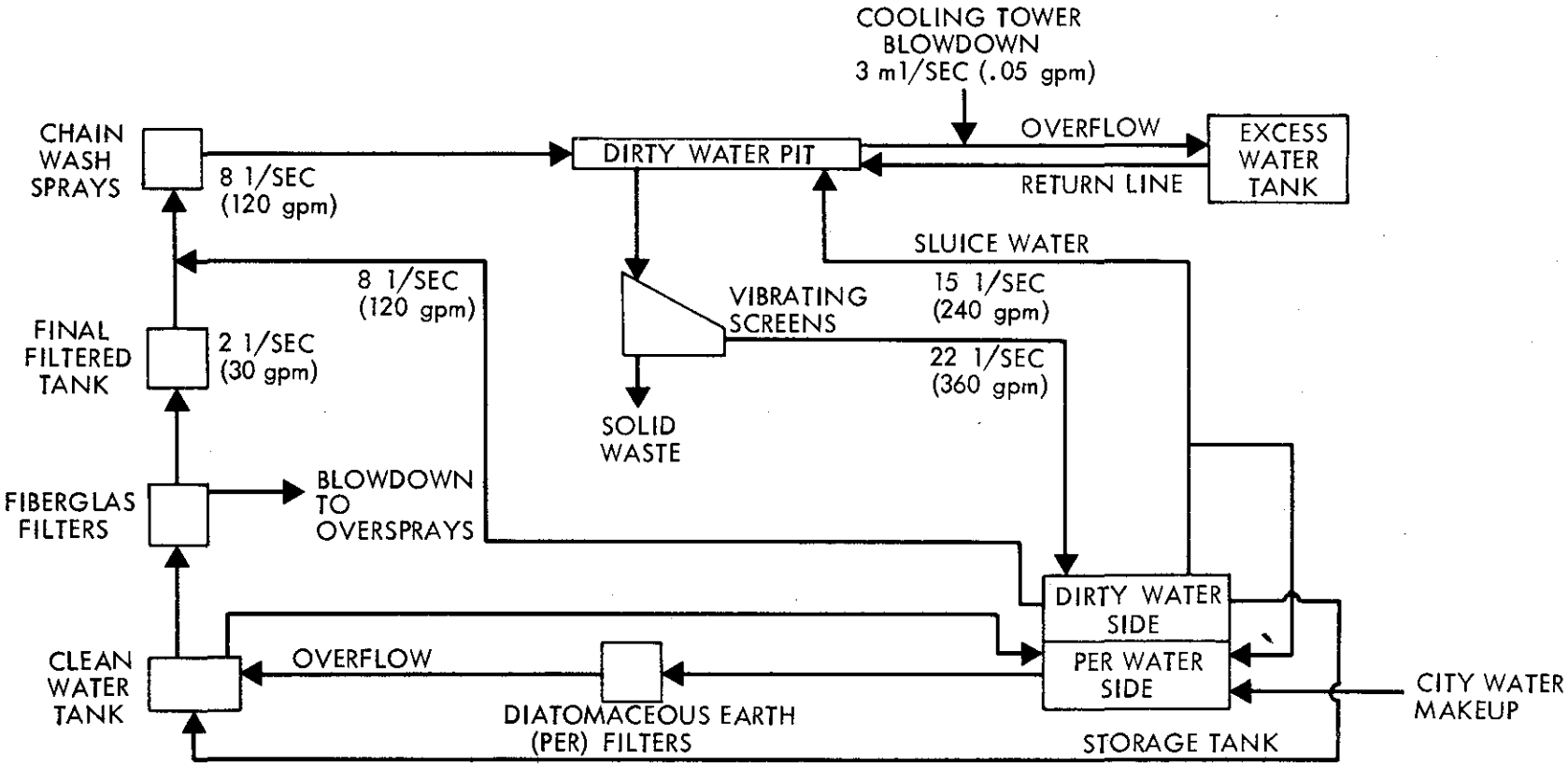

Plant G

This plant was the recipient of government research funds in 1968 for demonstrating the feasibility of complete recirculation of chain washing waters. The project was based on three principles. First, the caustic baths used to clean the forming chains could be replaced by high pressure water at 69 atm (1000 psig). Secondary diatomite filtration would prevent spray nozzle plugging. Finally, the entire blowdown from the system could be used as overspray. Figure XV illustrates the process water system.

The plant is an old, small plant producing 2,300 metric tons (5 million pounds) per year of pipe insulation. Consequently, a simpler binder mixture is used than for standard building insulation, and fewer problems are encountered in recyling the waters. The recycle system operates at between 0.1 and 0.5 percent total solids concentration.

Several items have been changed since the research grant. The diatomite filters have not proved to be as successful as they were originally thought to be, since excessive maintenance is required. The company has subsequently decided to replace these filters with a screening and clarification system. The research report also included anticipated resin savings in the systems costs, since the recycled phenols do display some binding properties. These properties, are not as significant as first assumed and no cost savings occurred.

Additional pipes discharging process waters have been discovered since the research project was carried out, and have been subsequently connected into the treatment system. The remaining discharges have been diverted to a sanitary sewer. These wastes include caustics for mandrel cleaning, cooling water, and other phenol-free waste streams.

FIGURE XV

WATER FLOW DIAGRAM OF

PLANT G

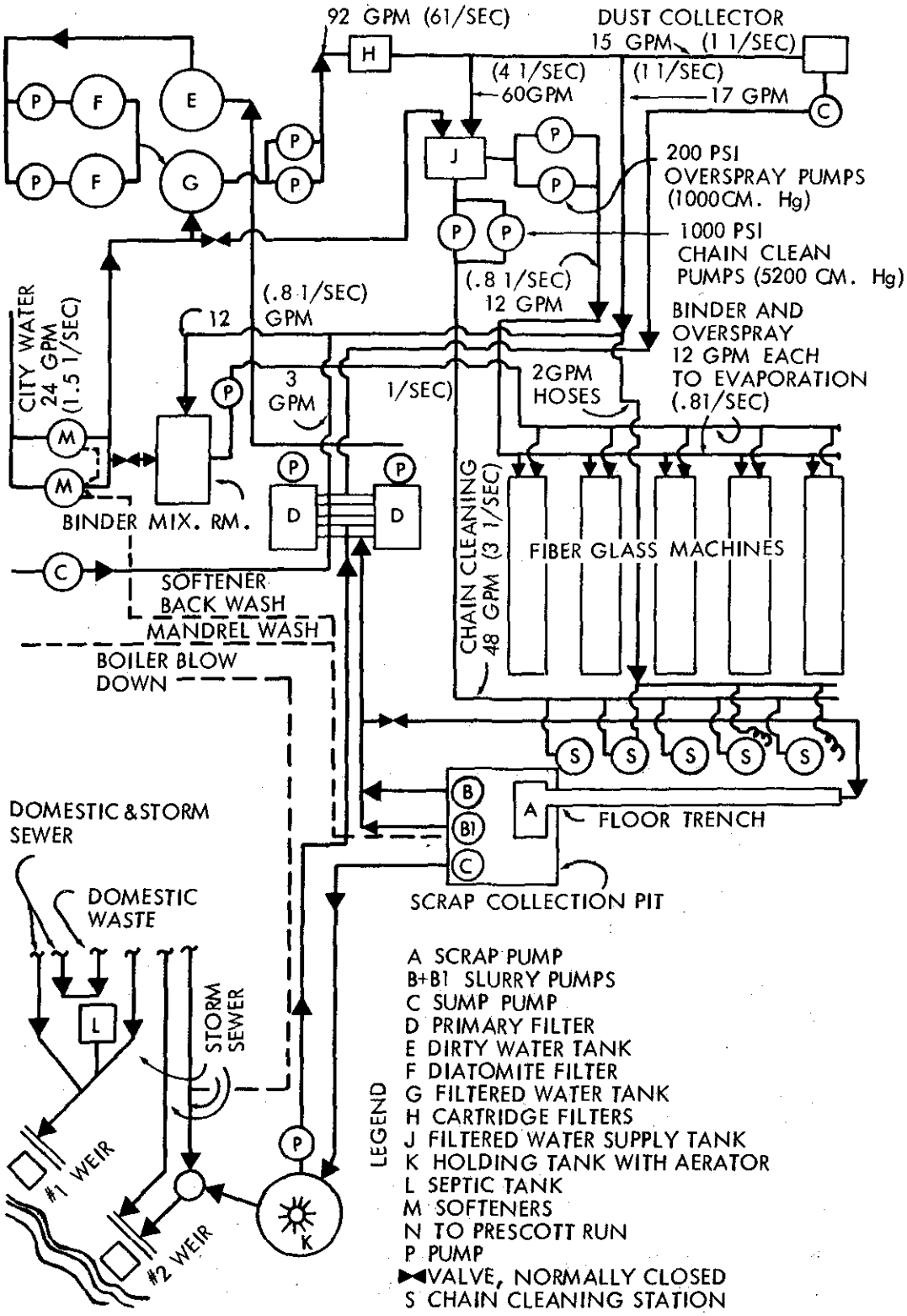

Air Pollution Control Effects on Recirculation System

It was previously discussed in Section IV that the three companies use different methods to control air emissions. It was also mentioned that one company was unable to maintain a total recirculation system and consume all the water used to flush the plates of an electrostatic precipitator.

This company at one line uses a binder solution at a resin concentration of 8 percent rather than the normal 15 to 20 percent. This in effect eliminates the need for a separate overspray system. Since some of the binder ingredients are already in solution the extra dilution comprises 70% of the binder. Using chain wash water as dilution water will eliminate 670 kg/kkg product of water. Through experience the company has found that the maximum organic solids content that can be tolerated by the system due to plugging and binder compatability problems is 1 percent. This amounts to 6.7 kg/kkg product. The organic input into the process from the binder is 27 kg/kkg, assuming a binder efficiency of 67 percent before total recirculation. The assumption is then made that 50 percent of this organic load is removed as suspended solids in the chain wash water treatment system. It is further estimated that two-thirds of the remaining 13.5 kg/kkg product of organics are entrained in the wasted forming gas. In order to comply with state air emission requirements an electrostatic precipitator was designed to remove 85 percent of the particulates. This amounts to 1.3 kg/kkg product loss as an air emission and 12.2 kg/kkg product of dissolved organic solids still in the water system.

At the concentration of 1 percent, 6.7 kg/kkg product of organic solids can be removed for binder dilution, necessitating the discharge of 5.5 kg/kkg product of organic solids.

Preliminary analysis of the effluent by the company shows concentrations of parameters in the ranges given in Section IV.

Summary

In summary the preceding examples illustrate the following points.

1. The type of fiberizing process has no effect upon the treatability of the wastes in a recycle system.

2. High pressure sprays at 69 atm (1000 psig) can effectively clean the forming chain if sufficient treatment of the recycled water is provided to avoid damage to the pumps, pipes, and spray nozzles.

3. Smaller volumes of water can be used at higher pressures in order to effectively clean the chain.

4. The size of the plant has no effect upon the treatability of the wastes in a recycle system.

5. The age of a plant does affect the efficiency of a recycle system in that in the design of a new plant minor changes in

the process will significantly improve the treatability of the waste waters.

6. Although recycled phenols do have some binding capabilities, they are not such as to cause a significant reduction in the amount of binder used.

7. The treatment systems described operate within a rather narrow range of total solids concentrations. New binder formulations and additional wet air pollution control equipment may necessitate significant changes in the recycle system requiring external blowdown as an interim measure. The reason for this is that only a limited quantity of water can be eliminated as binder dilution or overspray water.

8. Using properly treated blowdown for overspray or binder dilution water will not affect the quality of the product.

9. The use of blowdown for either overspray or binder dilution varies among the industry, depending upon the the particular air emissions, water rate, and treatment problems encountered by each company.

SECTION VIII

COST, ENERGY AND NONWATER QUALITY ASPECTS

Cost Reduction Benefits of Alternate Treatment and Control Technologies

The three alternate treatment and control technologies considered are biological treatment, biological treatment and carbon adsorption, and complete recycle. All three treatment schemes consist of recycling chain wash water and treatment of only the blowdown. Consideration of treatment of once-through process water has long since been abandoned by the industry because of the large volumes involved and the amenability of chain wash water to treatment and recycle.

Table XV compares the costs and effluent qualities for the three alternate treatment schemes as they are estimated for Plant A. The table clearly indicates that total recycle is the best economic alternative of the three treatment schemes for best practicable control technology currently available, best available technology economically achievable, and best available demonstrated control technology. It is here assumed that the relationship between the costs of the three alternatives will hold for different plant sizes. Even if this were not true, it is quite significant that no discharge of pollutants can be achieved at costs comparable to end-of-pipe treatment technology.

Furthermore, the best available technology economically achievable specifies application of technology "which will result in reasonable further progress toward the national goal of eliminating the discharge of all pollutants." Total recycle of process waters is economically achievable and meets the no discharge of pollutants goal. Total recycle of process waters is currently practiced by a significant portion of the industry.

Cost of Total Recycle of Process Waters

Table XVI summarizes the water pollution abatement costs for a few insulation fiberglass plants. Investment costs have been interpolated to August 1971 dollars by using EPA tables of sewage treatment plant cost indexes. (14) Two depreciation periods are used in calculating total annual cost. The first is the true depreciation period as determined by the company. For the second, a 10 year depreciation period is used for the purpose of comparison.

An economic study by one consultant (11) concluded that zero discharge is practical for the insulation fiberglass industry. The firm selected two basic forms of recycle systems. Treatment A, coarse filtration, fine filtration and water recycle, is practiced at Plant F.

TABLE XV

A COMPARISON BETWEEN THE ALTERNATE TREATMENT AND CONTROL TECHNOLOGIES[1]

	Raw Waste Load	Extended Aeration	Extended Aeration + Activated carbon	Total Recycle
Capital Costs ($1000)		1160	1320	785
Annual Operating Costs ($1000)[2]		540	556	508.5
Effluent Quality ($1000)				
BOD_5 (mg/l)	998	15.2	10[3]	0[4]
COD (mg/l)	6532	269	50[3]	0[4]
Phenol (mg/l)	199	0.8	0.05[3]	0[4]
Suspended Solids (mg/l)	761	21.4	5[3]	0[4]
Color	yes	yes	no	no

1. All cost data based upon a 123,000 metric tons (270 million pounds) per year plant.
Blowdown is 0.57 million liters per day (0.15 million gallons per day).

2. Operating and maintenance costs and power costs for extended aeration and activated carbon are assumed to be the same for the total recycle system.

3. Estimated

4. No discharge, hence no pollutants.

TABLE XVI
WATER POLLUTION ABATEMENT COSTS FOR TOTAL RECYCLE

	Plant									
	A	B	E	F	F[3]	G	I	L	O	Q
Capacity (Thousand Metric Tons/Yr.)	123	34	16.9	9	16	2.3	130	33	71	200
(Million Pounds/yr.)	270	75	35	20	35	20	287	73	157	444
Investment[1] ($1000)	785[4]	660[4]	483	325	340.5	245.4	1060[4]	316[4]	1220[4]	2700[4]
Investment/metric tons/yr.	6.4	19.4	28.6	36.2	21.3	100.6	8.2	9.6	17.2	13.5
Annual Costs										
Capital Costs ($1000)			2							
Depreciation ($1000)	78.5	66	24	23.7		17.5	106	31.6	122	270
Years Amortization	10	10	20	14		14	10	10	10	10
Operating and Maintenance ($1000)	382	100	55	36.5	44.5	13.8	200	50	137	438
Energy and Power Costs ($1000)	48	20	8	1.7	2.3	4.6	66	19	29	98
Total Annual Cost ($1000)	508.5	186	89	62		36	372	100.6	288	806
Adjusted Annual Cost[2] ($1000)	508.5	186	113	71	81	43	372	100.6	288	806
Adjusted annual cost/metric ton/yr.	4.1	5.5	6.7	7.9	5.1	18.7	2.9	3.1	4.1	4.0
Energy Consumption (100,000 kilowatt-hours/yr)	4.0	2.3	.551	.1658	.212	.512	6.9	2.3	4.6	12.7

1 Adjusted to August 1971 dollars using sewage treatment plant cost index (14).
2 Total Annual Cost using a 10 year amortization period.
3 After 1972 expansion to 4 lines, includes original oversized treatment system.
4 Estimated by company, not necessarily adjusted to August 1971 dollars.

Treatment B, coarse filtration, flocculation, settling and water recycle, is practiced at Plant B. Table XVII lists the resultant fixed capital investment and annual operating costs for the two treatment schemes scaled to the four plant sizes considered by the consultant.

As a ccnservative estimate, 80 percent production was used to calculate incremental capital and operating costs as shown in Table XVIII. Assumed selling prices and estimated current fixed capital investments were used. Figures XVI and XVII both clearly show that the investment cost of total process water recycle per unit production and the annual operating cost per unit production for the treatment systems are not lineally related to plant size. Therefore, the smaller plants will spend more per unit of product in order to maintain a closed water system than larger plants.

Assuming no price increases, the relative effects on company and plant pretax earnings as a result of the incremental operating costs will be equal to the proportion of selling price represented by these costs. If incremental costs are passed on, the current rate of profitability will be maintained. As current returns on investment are unknown for individual plants, the relative effects on returns on investment can only be obtained by assuming a certain level of profits on sales before taxes, and measuring sensitivity at various levels of returns on investment.

For this analysis, average pretax earnings are assumed to be 12 percent on sales for wool glass fibers. The current returns on investments tested are 5, 10, and 15 percent in Table XIX. Thus for wool glass, a 1 percent increase in operating costs will reduce returns on investments by 8.3 percent of the current rate.

Plants of any size that currently have a return on investment no better than 5 percent will become marginal and could possibly cease production. However, no such facilities exist. Plants operating at over 5 percent return on investment will continue to enjoy reasonable returns.

The capital that is needed for the industry to achieve nc discharge, assuming that there are presently no treatment facilities, will range from 6.0 to 13.5 millicn dollars depending upon the recycle alternative, 10 million dollars being the estimated mean. Operating costs of a pollution control equipment are estimated to be 3.7 million dollars per year for the industry. The consultant concluded that the insulation fiberglass industry has the financial capability to install total recycle facilities, and that this will have a minimal effect on the selling price of its products.

The economic analysis of the consultant report was based upon treatment systems employed at only two plants of different companies.

TABLE XVII

ESTIMATED COST OF WASTE WATER TREATMENT FOR INSULATION FIBERGLASS MANUFACTURE (11)

Plant Capacity: Thousand metric tons/yr.	Plant Capacity: Million lb/yr		Type Treatment System: A	Type Treatment System: B
200	440	Fixed Cap. Investment ($1000)	2000	1050
		Fixed Cap. Investment/Metric tons/yr.	10.0	5.2
		Annual Operating Cost ($1000)	610	680
		Annual Operating Cost/Metric tons/yr.	3.0	3.4
41	90	Fixed Cap. Investment ($1000)	800	400[1,2]
		Fixed Cap. Investment/Metric tons/yr.	19.5	9.8
		Annual Operating Cost ($1000)	200	200[3]
		Annual Operating Cost/Metric tons/yr.	4.9	4.9
9	20	Fixed Cap. Investment ($1000)	325[1]	
		Fixed Cap. Investment/Metric tons/yr.	36.1	17.8
		Annual Operating Cost ($1000)	80	71
		Annual Operating Cost/Metric tons/yr.	8.9	7.9
2	5	Fixed Cap. Investment ($1000)	150	70
		Fixed Cap. Investment/Metric tons/yr.	65.2	30.4
		Annual Operating Cost ($1000)	46	37
		Annual Operating Cost/Metric tons/yr.	20.0	16.1

A. Coarse filtration, fine filtration and water recycle.

B. Coarse filtration, flocculation, settling and water recycle.

1. Based on costs reported by the Industry

2. Actual investment was closer to $600,000 but the existing system has more capacity than required.

3. Reported cost was closer to 0.3¢/lb., but reported treatment chemical cost seems high.

TABLE XVIII

SUMMARY OF CAPITAL AND OPERATING COST EFFECTS: WOOL GLASS FIBER

Plant Capacity M metric ton	Plant Capacity (MM lb)	Type of Treatment Process	Plant Output* (MM lb)	Net Revenues ($MM)	Current Fixed Capital Investment ($MM)	Water Pollution Control Costs: Incremental Investment ($MM)	Incremental Investment as % of Current Investment	Incremental Operating Cost (¢/lb)	Incremental Operating Cost as % of Selling Price
200	440	(A) Coarse and Fine Filtration	352	98.5**	80	2.0	2.5	0.18	0.64
		(B) Flocculation and Settling	352	98.5	80	1.0	1.25	0.19	0.68
41	90	(A)	72	18.7***	26	0.8	3.8	0.27	1.04
		(B)	72	18.7	26	0.4	1.9	0.29	1.11
9	20	(A)	16	4.4**	10	0.325	3.25	0.50	1.78
		(B)	16	4.4	10	0.16	1.6	0.44	1.57
2.3	5	(A)	4	1.2****	4	0.15	3.75	1.15	3.83
		(B)	4	1.2	4	0.07	1.75	0.93	3.10

* @ 80% Yield
** @ 28¢/lb
*** @ 26¢/lb
**** @ 30¢/lb

[1] Table reproduced from "Initial Economic Impact Analysis of Water Pollution Control Costs Upon the Fiber Glass Industry," reference 11

FIGURE XVI

INVESTMENT COST OF TOTAL RECYCLE

PER UNIT PRODUCTION

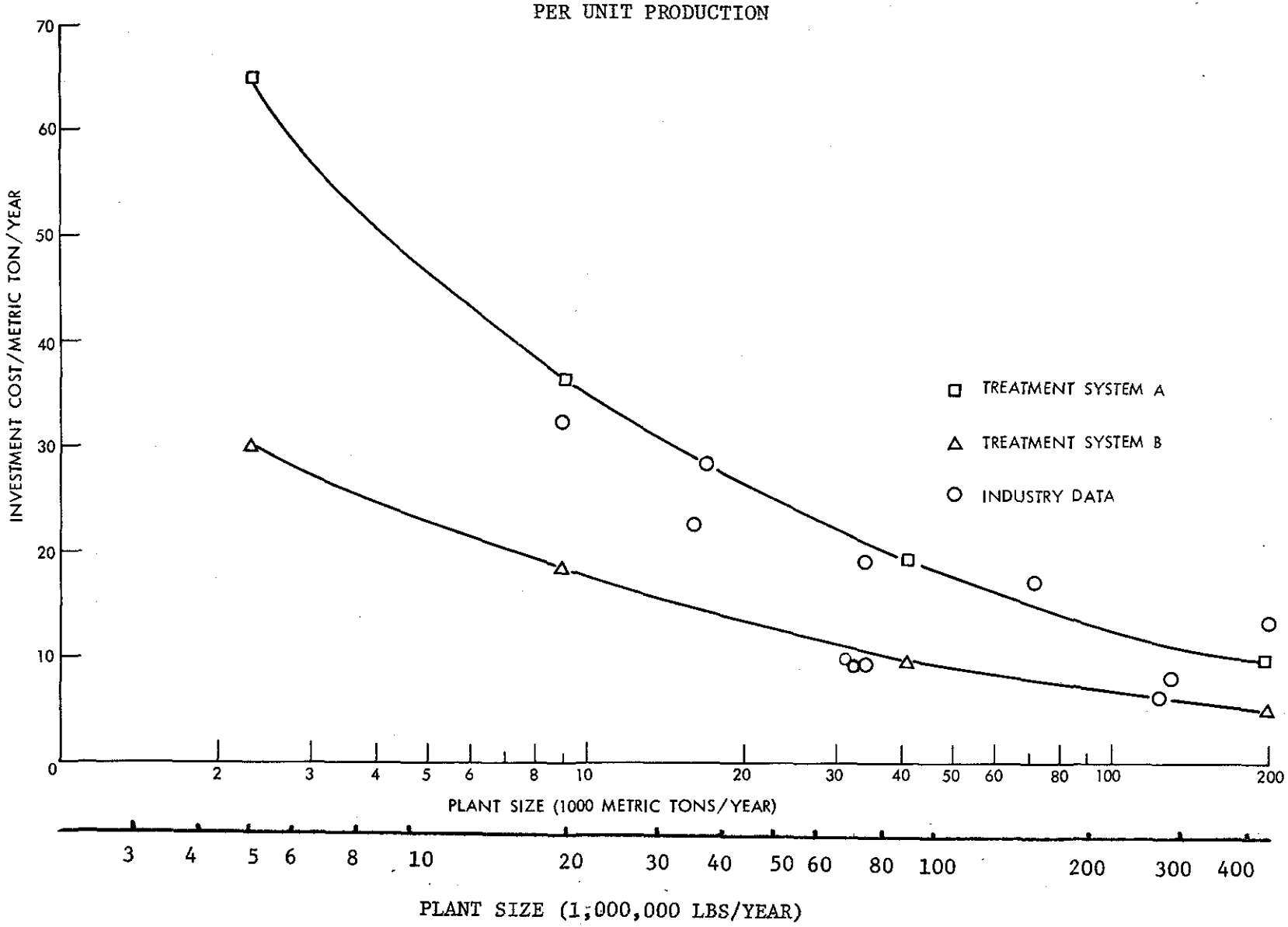

FIGURE XVII

ANNUAL OPERATING COSTS OF TOTAL RECYCLE

PER UNIT PRODUCTION

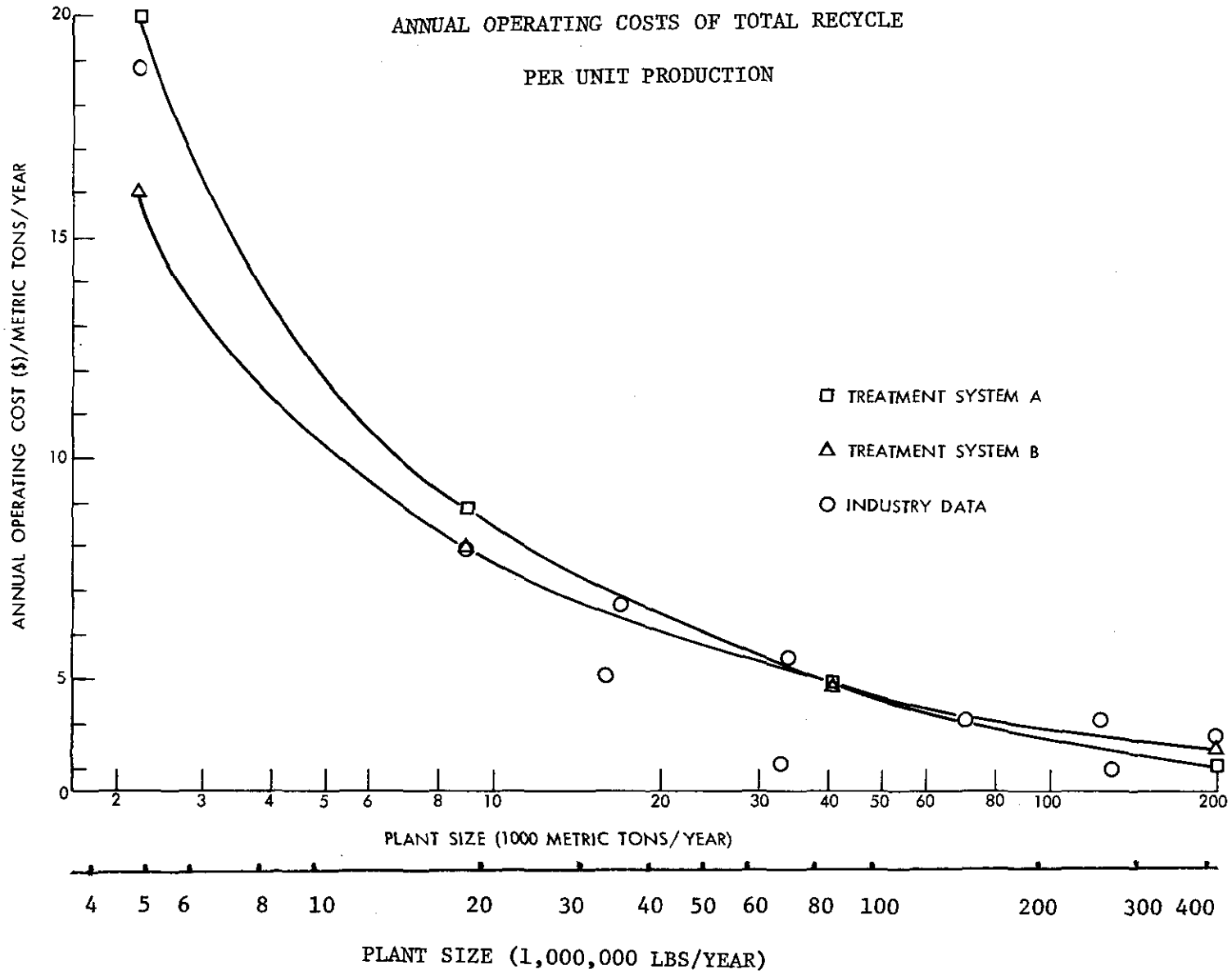

TABLE XIX

EFFECTS ON RETURNS ON INVESTMENT
WOOL GLASS FIBER (11)

Plant Size Capacity (M metric tons/yr)	Waste Water Treatment Type	Operating Cost as % of Selling Price	Predicted effect on return on investment if currently at 5%	10%	15%
200	A	.64	4.7	9.5	14.2
	B	.68	4.7	9.5	14.2
41	A	1.04	4.6	9.2	13.7
	B	1.11	4.5	9.1	13.6
9	A	1.79	4.3	8.5	12.8
	B	1.57	4.4	8.7	13.0
2	A	3.83	3.4	6.8	10.2
	B	3.10	3.7	7.4	11.1

Figures XVI and XVII compare the costs of water treatment for different sizes of plants as determined from actual industry calculations and the estimates by the consultant previously mentioned. As seen, actual costs lie within or below the limits estimated by the consultant report, and it can be assumed that the conclusions of the consultant study generally hold true for the entire insulation fiberglass industry.

Further analysis reveals that annual operating and investment of recycle per annual production rating roughly double from the largest plant, 200,000 metric tons per year, to plants producing 9,000 metric tons per year. Eighty-five percent of the insulation fiberglass plants operate within this range, and the relatively small cost variance should not give the large plants a particular advantage. In fact the largest plants, which seemingly have the greatest cost advantage, are old plants which require considerable plant modifications not accounted for in the economic analysis. The costs of recycle systems increase at a much faster rate for plants smaller than 9,000 metric tons per year. However, plants in this size range produce specialty products that sell for a higher price than the standard building insulation that is most economically produced by medium and large plants. The average price of industrial insulation is 40 percent more than for building insulation. Pipe insulation, which is a speciality product, sells for $1.16 per pound for one company compared to $0.305 per pound for building insulation. This means that the percentage cost increase per product weight relative to market price should vary less over the entire range of plant sizes than Figures XVI and XVII indicate. In fact, the smallest primary insulation plant has successfully recycled chain wash water for 3 1/2 years.

Nonwater Pollution Effects of the Closed Treatment System

Subsurface disposal of process waters by seepage ponds has caused ground water contamination at one insulation fiberglass plant. Evaporation ponds should therefore be lined or sealed. Insufficient information regarding spray irrigation with process waste waters exists to judge this disposal method.

In the progression from no treatment to recycle systems, the industry has had to contend with increasing amounts of sludges consisting of cullet, glass fiber - resin masses, particulates removed from stack gases, and wasted product. Since these solids are in an unusable form, they are hauled to sanitary landfills. Restrictions at some sites prohibit burial of phenolic wastes because of the fear of ground water contamination. One company proposes to autoclave its sludges to insure complete polymerization of the phenols. It should be emphasized that the amounts of solid wastes generated by total recirculation system are no greater than if the industry were to employ alternate end-of-pipe waste water treatment technologies.

Total process water recirculation systems have no adverse impact on air emissions as long as the total organic content of the recycled water is kept at or below 1 percent. Plant D illustrates this point. In this case inadequately treated water is recycled as air scrubber water and may actually transfer contaminants to the air. However, this plant will

soon be installing additional water treatment equipment which should correct the problem.

High pressure spray water pumps can produce objectionable levels of noise. However, a fiberglass plant is extremely noisy, especially in the forming area. The small increment of additional noise introduced by pumps and other miscellaneous recycle equipment will not affect the hearing protection measures already practiced by the industry. Insulation techniques can also minimize this problem.

This type of treatment system does affect land requirements. The treatment systems employed at Plants A and B and proposed at Plant D require considerable space for flocculating and settling tanks, since low pressure, high volume wash systems are used. Emergency holding ponds are desirable but not practicable at many existing urban plants.

Estimated energy consumption for existing and proposed treatment systems are given in Figure XVIII. As seen from the graph, power requirements are nearly directly proportional to plant size. The total additional energy required is estimated to be 38.6 million kilowatt-hours per year. The industry considers this extra energy needed to operate water treatment systems to be minor when compared to the energy requirements of the fiberglass manufacturing equipment and furnaces.

FIGURE XVIII

ENERGY CONSUMPTION OF

TOTAL RECYCLE

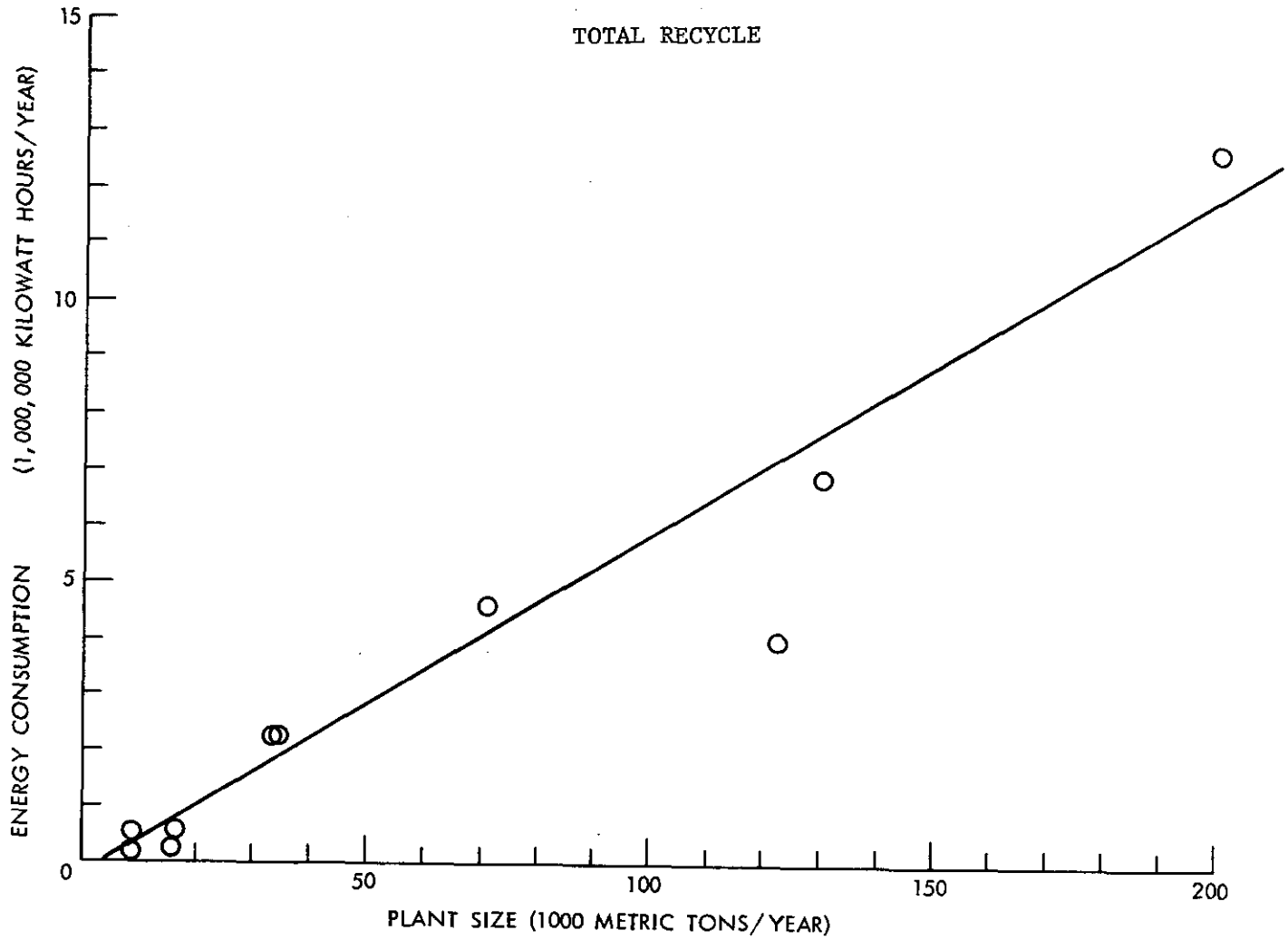

SECTION IX

EFFLUENT REDUCTION ATTAINABLE THROUGH THE APPLICATION OF THE BEST PRACTICABLE CONTROL TECHNOLOGY CURRENTLY AVAILABLE -- EFFLUENT LIMITATIONS GUIDELINES

Introduction

The effluent limitations which must be achieved July 1, 1977, are to specify the degree of effluent reduction attainable through the application of the best practicable control technology currently available. This technology is generally based upon the average of the best existing performance by plants of various sizes, ages and unit processes within the industrial category and/or subcategory industry. This average is not based on a broad range of plants within the insulation fiberglass manufacturing industry, but based on performance levels achieved by exemplary plants. Consideration must also be given to:

a. The total cost of application of technology in relation to the effluent reduction benefits to be achieved from that application;

b. the size and age of equipment and facilities involved;

c. the processes employed;

d. the engineering aspects of the application of various control techniques;

e. process changes; and

f. non-water quality environmental impact (including energy requirements).

Best practicable control technology currently available emphasizes treatment facilities at the end of a manufacturing process but includes the control technology within the process itself when this is considered to be normal practice within an industry.

A further consideration is the degree of economic and engineering reliability which must be established for the technology to be "currently available." As a result of demonstration projects, pilot plants and general use, there must exist a high degree of confidence in the engineering and economic practicability of the technology at the time of commencement of construction or installation of the control facilities.

Effluent Reduction Attainable Through The Application of Best Practicable Control Technology Currently Available

On the basis of the information contained in Sections III through VIII of this report, a determination has been made that the degree of effluent reduction attainable through the application of the best

practicable control technology currently available is no discharge of process waste water pollutants and noncontact cooling water pollutants to navigable waters.

Identification of Best Practicable Control Technology Currently Available

Best practicable control technology currently available for the insulation fiberglass manufacturing subcategory consists of recycle and reuse of process waters and noncontact cooling water within the operation. To implement this will require:

1. Replacement of caustic baths with pressurized water sprays in order to clean forming chains of glass fiber and resin. This has already been accomplished by the industry.

2. The higher the pressures are, the better the cleaning results. This results in minimizing the use of other cleaning methods and in the design of smaller treatment systems, since less water is used.

3. Reuse of chain wash water after suitable treatment.

4. Blowdown from the chain wash system to control dissolved solids disposed of in the process as overspray and binder dilution water, or extra - process by evaporation.

5. Incorporation of hood wash water in the chain wash system.

6. Incorporation of other miscellaneous process waters, such as mandrel cleaning caustic, in the chain wash system.

7. Recirculation of cullet cooling water with blowdown to the chain wash recirculation system.

This treatment technology is currently being implemented by the industry with completion expected before the July 1, 1977, deadline.

Noncontact cooling water may be discharged.

Standards governing the discharge of noncontact cooling water will be formulated in a later study and added to the effluent limitations for this subcategory.

Waste water, used exclusively for advanced air emission control devices, which cannot be totally recycled as binder dilution water or as overspray may be discharged after suitable treatment. This discharge must meet the following limitations:

Pollutant characteristics	Maximum for any one day kg/kkg (lb/1000 lb) of product	Maximum average of daily values for any period of 30 consecutive days kg/kkg (lb/1000 lb) of product
Phenols	0.0006	0.0003
COD	0.33	0.165
BOD_5	0.024	0.012
TSS	0.03	0.015
pH	within the range 6.0 to 9.0	

Cullet water is determined to be compatible with publicly owned treatment works.

Rationale for the Selection of Best Practicable Control Technology Currently Available

Age and Size of Equipment and Facilities

As set forth in this report, industry competition and general improvements in production concepts have hastened modernization of plant facilities throughout the industry. This, coupled with the similarities of waste water characteristics for plants of varying sizes substantiates that total recycle is practicable.

Total Cost of Application in Relation to Effluent Reduction Benefits

According to the information in Section VIII of this report, the industry as a whole would have to invest up to an estimated maximum of $10,000,000 to achieve the effluent limitations prescribed herein. This amounts to approximately a 1.2 to 3.8 percent increase in projected total capital investment and an anticipated increase of 0.6 to 3.8 percent in the operating cost.

Table XI lists the annual raw waste loads for this industry. About fifty percent is discharged to publicly owned treatment works. Another thirty-two percent is retained by existing recycle operations. The proposed standards would prevent direct discharge of the remaining amounts of pollutants to navigable streams. In conjunction with the Pretreatment Standards for existing sources, the standards would eliminate that portion of pollutants not receiving treatment at publicly owned treatment works. In addition the proposed regulations would prevent discharge of pollutants at future plants.

It is concluded that the benefit of the ultimate reduction to zero discharge of pollutants outweighs the costs. Presently 32 percent of plants are achieving no discharge of pollutants.

Processes Employed

All plants in the industry use the same or similar production methods, the discharges from which are also similar. There is no evidence that operation of any current process or subprocess will substantially affect

capabilities to implement best practicable control technology currently available.

Engineering Aspects of Control Technique Applications

Seven plants have installed or are starting up phenolic waste water total reciruclation systems. Four of these plants are totally recycling other process waste waters, such as cullet cooling water and caustic mandrel wash water. In addition other plants recycle certain waste streams such as noncontact cooling and cullet cooling water or have partial process waste water recirculation systems that are one step from being total recirculation systems. The concepts are proved; they are available for implementation; they enhance production; and waste management methods may be readily adopted through adaptation or modification of existing production units.

Process Changes

This technology is an integral part of the whole waste management program now being implemented within the industry. While it does require inprocess changes, they are practiced by many plants in the industry.

Air Emission Controls

As described in Section VII a discharge of process waste water may be necessary when advanced air emission control devices are employed. Process changes will be required that may not qualify as best practicable control technology currently available. It is judged that discharge of the excess waste water will be permitted.

A biological treatment system operated on these specific wastes has attained the concentration levels listed in Table XIII. Multiple stage bio-oxidation systems can attain phenol concentrations below 0.1 mg/l.

The following concentrations are judged to be achievable after biological treatment of these phenolic wastes given the raw waste loads listed in Section IV:

COD	275 mg/l
BOD_5	20 mg/l
SS	25 mg/l
Phenol	0.5 mg/l

The one company that is unable to recirculate all process waste water must discharge 0.513 lb water/lb product. Allowing 0.60 lb water/lb product and using the above concentrations the following pounds of pollutant are calculated:

COD	0.165 lb/1000 lb product
BOD_5	0.012 lb/1000 lb product
TSS	0.015 lb/1000 lb product
Phenols	0.003 lb/1000 lb product

This only applies to that water exclusively used for advanced air emission control systems.

Insufficient data on the biological treatment system once operated at Plant A exist for one to perform a thorough statistical analyses. However, for this treatment system, if the maximum allowable discharge where set at twice the maximum long term average this would approximately equal three standard deviations for COD and TSS, two standard deviations for BOD_5, and one standard deviation for phenol.

The activated sludge system operated at the coke plant discussed in Section VII is able to keep the phenol concentration less than 1.0 mg/l, which is twice the 0.5 mg/l used to determine the effluent limitation 99.5 percent of the time. It therefore does not seem unreasonable in requiring the maximum discharge of a parameter to be less than twice the average.

Nonwater Quality Environmental Impact

There is one essential impact upon major non-water elements of the environment: a potential effect on soil systems due to strong reliance upon the land for ultimate disposition of solid wastes. Subsurface disposal of process waste waters from seepage, percolation, or infiltration is not recommended due to possible contamination of ground waters.

Pretreatment

Process waste waters may generally be divided into two categories. Those that are exposed to the binder and those that are not. The only waste water that qualifies for the latter category is that water used ahead of the fiber forming process, that is, cullet water. Cullet waste water accumulates only minor amounts of heat and suspended solids. Both parameters are compatible with publicly owned treatment works. However, those works are not normally designed to treat the pollutants associated with the binder. These pollutants are therefore considered to be incompatible with publicly owned treatment works.

SECTION X

EFFLUENT REDUCTION ATTAINABLE THROUGH THE APPLICATION OF THE BEST AVAILABLE TECHNOLOGY ECONOMICALLY ACHIEVABLE -- EFFLUENT LIMITATIONS GUIDELINES

Introduction

The effluent limitations which must be achieved by July 1, 1983, are based on the degree of effluent reduction attainable through the application of the best available technology economically achievable. For the fertilizer manufacturing industry, this level of technology was based on the very best control and treatment technology employed by specific point sources within the industrial category or subcategory, or where it is readily transferable from one industry process to another. Best available technology economically achievable places as much emphasis on in-process controls as on control or treatment techniques employed at the end of a production process.

Those plant processes and control technologies which at the pilot plant, semi-works, or other level have demonstrated both technological performance and economic viability at a level sufficient to reasonably justify investing in such facilities were also considered in assessing best available technology economically achievable. This technology is the highest degree of control technology that has been achieved or has been demonstrated to be capable of being designed for plant scale operation up to and including "no discharge" of pollutants. Although economic factors are considered in this development, the costs for this level of control are intended to be for the top-of-the-line of current technology subject to limitations imposed by economic and engineering feasibility. However, best available technology economically achievable may be characterized by some technical risk with respect to performance and with respect to certainty of costs. Therefore, this technology may necessitate some industrially-sponsored development work prior to its application.

The following factors were taken into consideration in determining best available technology economically achievable:

a. The age of equipment and facilities involved;

b. The process employed;

c. The engineering aspects of the application of various types of control techniques;

d. Process changes;

Process Water Guidelines

The effluents limitations reflecting this technology is no discharge of process waste water pollutants into navigable waters as developed in Section IX.

Two of three companies manufacturing insulation fiberglass are achieving no discharge of process waste water pollutants by methods that include process changes such as binder formulations. It is within the scope of best available technology to include process changes in determining effluent limitations. The fact that this technology is being demonstrated by two-thirds of the industry qualifies it as best available.

SECTION XI

NEW SOURCE PERFORMANCE STANDARDS AND PRETREATMENT STANDARDS

Introduction

This level of technology is to be achieved by new sources. The term "new source" is defined in the Act to mean "any source, the construction of which is commenced after publication of proposed regulations prescribing a standard of performance." New source performance standards are to be evaluated by adding to the consideration underlying the identification of best available technology economically achievable a determination of what higher levels of pollution control are available through the use of improved production processes and/or treatment techniques. Thus, in addition to considering the best in-plant and end-of-process control technology identified in best available technology economically achievable, new source performance standards are to be based on an analysis of how the level of effluent may be reduced by changing the production process itself. Alternative processes, operating methods, or other alternatives were to be considered. However, the end result of the analysis identifies effluent standards which would reflect levels of control achievable through the use of improved production processes (as well as control technology), rather than prescribing a particular type of process or technology which must be employed. A further determination which was to be made for new source performance standards is whether a standard permitting no discharge of pollutants is practicable.

Process Water Guidelines

The effluents limitations for new sources is no discharge of process waste water pollutants into navigable waters, as developed in Section IX.

Two-thirds of this industry is achieving no discharge of process waste water pollutants by methods that include process changes such as binder formulations. It is within the scope of best demonstrated technology to include process changes in determining effluent limitations.

Pretreatment

As developed in Section IX, cullet water is determined to be compatible with publicly owned treatment works. All other process waste water pollutants are determined to be incompatible with publicly owned treatment works.

SECTION XII

ACKNOWLEDGMENTS

The author wishes to express his appreciation to various persons with the insulation fiberglass industry for their willing cooperation in providing analytical data, flow diagrams, related information, and assistance with respect to on-site plant visits. In this regard those persons so cited are: Mr. S.H. Thomas, Director of Environmental Control, and Mr. George W. Fletcher, Environmental Control Specialist, Owens-Corning Fiberglas, Inc.; Mr. E.M. Fenner, Director of Technical Relations, and Mr. G.A. Ensign, Manager of Environmental Control Engineering, Johns-Manville Corporation; Mr. E.B. Norwicki and Mr. Peter J. Rafferty, Managers of Environmental Control, Certain-Teed Products Corporation; and Mr. L.T. Powell, Manager of Process Engineering, Pittsburgh Plate Glass Industries. In addition to these men and their immediate staff, the author also wishes to express his appreciation to the plant managers and staff at those plants inspected by EPA for their more than cooperative assistance.

Acknowledgment is given to the Office of Research and Monitoring for providing contacts in the fiberglass industry through existing and past Technology Research Projects. Previous Interim Guidance Documents by the Office Permit Programs have formed a basis on which this document was written.

Thanks are given to Ernst Hall, Walter Hunt and Ronald McSwiney of the Effluent Guidelines Division who spent many extra hours revising the document. The working group/steering committee members who reviewed this document in order to coordinate intra-agency environmental efforts are Ernst Hall, Effluent Guidelines Division; Taylor Miller, Office of Enforcement and General Council; Arthur Mallon and Charles Ris III, Office of Research and Monitoring; James Santroch, National Environmental Research Center, Corvallis; John Savage, Office of Planning and Evaluation; J. William Jordan and James Grafton, Office of Permit Programs; and Robert Atherton, Office of Air Quality Planning and Standards. Last but not least, appreciation is given to the secretarial staff of the Effluent Guidelines Division, in particular Ms. Kay Starr, in the typing of drafts and revisions and final preparation of the effluent guidelines document.

Section XIII

BIBLIOGRAPHY

1. "Glass Fibers," Encyclopedia Britannica, Volume 10, William Benton, Publisher, Chicago, pp. 475-476.

2. Phillips, C. J., "Fiber Glass," The Encyclopedia Americana, Volume 6, Americana Corporation, New York, pp. 170-170b.

3. Shreve, R. Norris, Chemical Process Industries, 3rd edition, McGraw-Hill Book Company, New York, pp. 700-702, (1967).

4. Shand, E. B., Glass Engineering Handbook, 2nd edition, McGraw-Hill Book Company, New York, pp. 375-410, (1958).

5. Phenolic Waste Reuse by Diatomite Filtration, Johns-Manville Products Corporation, Water Pollution Control Research Report, federal grant number 12080 EZF (September, 1970).

6. Baloga, J.M., Hutto, F.B., Jr., and Merrill, E.I., "A Solution To The Phenolic Pollution Problem In Fiber Glass Plants: A Progress Report," Chemical Engineering Progress Symposium Series, American Institute of Chemical Engineers, Number 97, Volume 65, pp. 124-127. (1968).

7. Angelbeck, Donald L., Reed, Walter B., and Thomas, Samuel H., "Development and Operation of a Closed Industrial Waste Water System," Owens-Corning Fiberglas Corporation Paper Presented at the Purdue Industrial Waste Conference, Purdue University, West Laffayette, Indiana, (May 4, 1971).

8. Fletcher, George W., Thomas, Samuel H., and Cross, Donald E., "Development and Operation of a Closed Wastewater System For The Fiberglas Industry," Owens-Corning Fiberglas Corporation, Paper Presented at the 45th Annual Conference, Water Pollution Control Federation, Atlanta, Georgia, (October 9, 1972).

9. "Welcome to Owens-Corning Fiberglas...A citizen of Newark, Ohio," Owens-Corning Fiberglas Corporation.

10. Helbring, Clarence H., et al, "Plant Effluent - Recycle and Reuse, PPG Industries, Works #50, Shelbyville, Indiana, "PPG Industries, A Paper Presented at the Purdue Industrial Waste Conference, Purdue University, West Laffayette, Indiana, (1971).

11. "Initial Economic Impact Analysis of Water Pollution Control Costs Upon The Fiber Glass Industry," report to Environmental Protection Agency by Arthur D. Little, Inc., Cambridge, Massachusetts, Contract No. 68-01-0767, (1973).

12. Standard Methods for the Examination of Water and Wastewater, 13th edition, American Public Health Association, Washington, D. C. (1971).

13. "Methods for Chemical Analysis of Water and Wastes," Environmental Protection Agency, National Environmental Research Center, Analytical Quality Control Laboratory, Cincinnati, Ohio (1971).

14. "Sewage Treatment Plant and Sewer Construction Cost Indexes," Environmental Protection Agency, Office of Water Programs Operations, Municipal Waste Water Systems Division, Evaluation and Resource Control Branch.

15. Screening Study for Background Information from Fiber Glass Manufacturing, Vulcan-Cincinnati, Inc,. Cincinnati, Ohio, prepared for EPA, Contract number 68-02-0299, (December 4, 1972).

16. Water Quality Criteria, 2nd edition, The Resources Agency of California, State Water Quality Control Board, publication No. 3-A (1963).

SECTION XIV

GLOSSARY

Act

The Federal Water Pollution Control Act Amendments of 1972.

Advanced Air Emission Control Devices

Air pollution control equipment, such as electrostatic precipitators and high energy scrubbers, that are used to treat an air discharge that has had initial treatment by equipment such as knock out chambers and low energy scrubbers.

Annual Operating Costs

Those annual costs attributed to the manufacture of a product or operation of equipment. They include capital costs, depreciation, operating and maintenance costs, and energy costs.

Atmosphere

Unit of pressure. One atmosphere is normal atmosphere pressure, 14.70 pounds per square inch.

Batt

Standard wool mat used for residential insulation.

Best Available Technology Economically Achievable (BATEA)

Treatment required by July 1, 1983, for industrial discharges to surface waters as defined by Section 301 (b) (2) (A) of the Act.

Best Practicable Control Technology Currently Available (BPCTCA)

Treatment required by July 1, 1977, for industrial discharges to surface waters as defined by Section 301(b) (1) (A) of the Act.

Best Available Demonstrated Control Technology (BADCT)

Treatment required for new sources as defined by Section 306 of the Act.

Binder

Chemical substance sprayed on the glass fibers in order to bond them together. Synonymous with the terms resin and phenolic resin.

Blowing Wool

Insulation that is either poured or blown into walls. It is produced by shredding standard insulation mats and is also referred to as pouring wool.

BOD5

Biochemical Oxygen Demand, 5 day, 20°C.

Borosilicate

A glass containing approximately five percent boric oxide.

Capital Costs

Financial charges which are computed as the cost of capital times the capital expenditures for pollution control. The cost of capital is based on a weighted average of the separate costs of debt and equity.

Category and Subcategory

Divisions of a particular industry which possess different traits which affect water quality and treatability.

Caustic

Any strongly alkaline material. Usually sodium hydroxide.

Chain

A revolving metal belt upon which the newly formed glass fibers fall to form a thick mat. There are two general types of chains: wire mesh chains and flight conveyors. The latter are hinged metal plates with several holes to facilitate the passage of air.

COD

Chemical Oxygen Demand

Cullet

Chunks of solid glass formed when molten glass bled from a furnace comes into contact with water.

Curing

The act of thermally polymerizing the resin onto the glass fibers in a controlled manner.

Depreciation

Accounting charges reflecting the deterioration of a capital asset over its useful life.

Diatomaceous Earth

A filter medium used in this case to remove fine glass-resin particles. The process of filtration is referred to as diatomite filtration.

Dry Air Pollution Control

The technique of air pollution abatement without the use of water.

Fiberglass

Extremely fine fibers of corrosion resistant glass of diameters typically less than 0.015 mm. Also fiber glass, fiberglas and glass fibers.

Flame Attenuation

The glass fiber forming process in which thick threads of glass are forced through perforated bushings and then reduced in diameter by burning gases or steam.

Forming Area

The physical area in which glass fibers are formed, sprayed with lubricant and/or binder, and fall to the chain. A downward forced air draft is maintained to insure proper binder dispersal and to force the fibers to the chain.

Glass Wool

The cured fiberglass - resin product. Also referred to as insulation fiberglass.

Ignition Loss

The percentage of product lost in combustion. It is a measure of the amount of resin in the product.

Investment Costs

The capital expenditures required to bring the treatment or control technology into operation. These include the traditional expenditures such as design, purchase of land and materials, site preparation, construction and installation, etc., plus any additional expenses required to bring the technology into operation, including expenditures to establish related necessary solid waste disposal.

Lubricant

Usually a mineral oil added to the binder to inhibit abrasion from the fibers.

Mandrel

A metal pipe with numerous holes about which fiberglass is wrapped to make pipe insulation.

Mat

The newly formed layer of fiberglass on the chain.

mg/l

Milligrams per liter. Nearly equivalent to parts per million concentration.

MM

Million (e.g. million pounds)

Navigable Waters

All navigable waters of the United States; tributaries of navigable waters of the United States; interstate waters; intrastate lakes, rivers, and streams which are utilized by interstate travelers for recreational or other purposes; intrastate lakes, rivers, and streams from which fish or shellfish are taken and sold in interstate commerce; and intrastate lakes, rivers, and streams which are utilized for industrial purposes by industries in interstate commerce.

New Source

Any building, structure, facility, or installation from which there is or may be a discharge of pollutants and whose construction is commenced after the publication of the proposed regulaticns.

Operations and Maintenance

Costs required to operate and maintain pollution abatement equipment. They include labor, material, insurance, taxes, solid waste disposal etc.

Overspray

Water spray applied to the newly formed glass fibers, the purpose of which is both to cool the hot glass and to decrease the rate of resin volatilization and polymerization.

Pack

A fiberglass product made from relatively thick fibers, as compared to glass wool insulation, that is used for special application (e.g. air filters and distillation column packing).

pH

A measure of the hydrogen ion concentration in water. A pH of 7.0 indicates a neutral condition. A greater pH indicates alkalinity and a lower pH indicates acidity. A one unit change in pH indicates a tenfold change in acidity and alkalinity.

Phenol

Class of cyclic organic derivatives with the basic formula C_6H_5OH.

Pretreatment

Treatment proved before discharge to a publicly owned treatment works.

Process Water

Any water which during the manufacturing process comes into contact with any raw materials, intermediate product, by-product, waste product, or finished product.

Resin

Syncnymous with binder.

Rotary Spinning

The glass fiber forming process in which glass is forced out of holes in the cylindrical wall of a spinner.

Sec

Second. Unit of time.

Secondary Treatment

Biological treatment provided beyond primary clarification.

Silicates

A chemical compound containing silicon, oxygen, and one or more metals.

Staple Fiber

Glass fibers with short irregular lengths used for insulation products in contrast to continuous filaments used for textile products.

Wet Air Pollution Control

The technique of air pollution abatement utilizing water as an absorptive medium.

TABLE XX

METRIC UNITS

CONVERSION TABLE

MULTIPLY (ENGLISH UNITS)		by	TO OBTAIN (METRIC UNITS)	
ENGLISH UNIT	ABBREVIATION	CONVERSION	ABBREVIATION	METRIC UNIT
acre	ac	0.405	ha	hectares
acre - feet	ac ft	1233.5	cu m	cubic meters
British Thermal Unit	BTU	0.252	kg cal	kilogram - calories
British Thermal Unit/pound	BTU/lb	0.555	kg cal/kg	kilogram calories/kilogra
cubic feet/minute	cfm	0.028	cu m/min	cubic meters/minute
cubic feet/second	cfs	1.7	cu m/min	cubic meters/minute
cubic feet	cu ft	0.028	cu m	cubic meters
cubic feet	cu ft	28.32	l	liters
cubic inches	cu in	16.39	cu cm	cubic centimeters
degree Fahrenheit	F°	0.555(°F-32)*	°C	degree Centigrade
feet	ft	0.3048	m	meters
gallon	gal	3.785	l	liters
gallon/minute	gpm	0.0631	l/sec	liters/second
horsepower	hp	0.7457	kw	killowatts
inches	in	2.54	cm	centimeters
inches of mercury	in Hg	0.03342	atm	atmospheres
pounds	lb	0.454	kg	kilograms
million gallons/day	mgd	3,785	cu m/day	cubic meters/day
mile	mi	1.609	km	kilometer
pound/square inch (gauge)	psig	(0.06805 psig +1)*	atm	atmospheres (absolute)
square feet	sq ft	0.0929	sq m	square meters
square inches	sq in	6.452	sq cm	square centimeters
tons (short)	t	0.907	kkg	metric tons (1000 kilogram
yard	y	0.9144	m	meters

* Actual conversion, not a multiplier