EPA U.S. Environmental Protection Agency
Office of Research and Development
Industrial Environmental Research Laboratory
Research Triangle Park, North Carolina 27711

EPA-600/7-78-043
March 1978

TECHNICAL MANUAL: A SURVEY OF EQUIPMENT AND METHODS FOR PARTICULATE SAMPLING IN INDUSTRIAL PROCESS STREAMS

Interagency
Energy-Environment
Research and Development
Program Report

RESEARCH REPORTING SERIES

Research reports of the Office of Research and Development, U.S. Environmental Protection Agency, have been grouped into nine series. These nine broad categories were established to facilitate further development and application of environmental technology. Elimination of traditional grouping was consciously planned to foster technology transfer and a maximum interface in related fields. The nine series are:

1. Environmental Health Effects Research
2. Environmental Protection Technology
3. Ecological Research
4. Environmental Monitoring
5. Socioeconomic Environmental Studies
6. Scientific and Technical Assessment Reports (STAR)
7. Interagency Energy-Environment Research and Development
8. "Special" Reports
9. Miscellaneous Reports

This report has been assigned to the INTERAGENCY ENERGY-ENVIRONMENT RESEARCH AND DEVELOPMENT series. Reports in this series result from the effort funded under the 17-agency Federal Energy/Environment Research and Development Program. These studies relate to EPA's mission to protect the public health and welfare from adverse effects of pollutants associated with energy systems. The goal of the Program is to assure the rapid development of domestic energy supplies in an environmentally-compatible manner by providing the necessary environmental data and control technology. Investigations include analyses of the transport of energy-related pollutants and their health and ecological effects; assessments of, and development of, control technologies for energy systems; and integrated assessments of a wide range of energy-related environmental issues.

EPA REVIEW NOTICE

This report has been reviewed by the participating Federal Agencies, and approved for publication. Approval does not signify that the contents necessarily reflect the views and policies of the Government, nor does mention of trade names or commercial products constitute endorsement or recommendation for use.

This document is available to the public through the National Technical Information Service, Springfield, Virginia 22161.

EPA-600/7-78-043
March 1978

TECHNICAL MANUAL: A SURVEY OF EQUIPMENT AND METHODS FOR PARTICULATE SAMPLING IN INDUSTRIAL PROCESS STREAMS

by

W. B. Smith, P. R. Cavanaugh, and R. R. Wilson

Southern Research Institute
2000 Ninth Avenue, South
Birmingham, Alabama 35205

Contract No. 68-02-2131
T. D. 10904A
Program Element No. EHE624

EPA Project Officer: D. Bruce Harris

Industrial Environmental Research Laboratory
Office of Energy, Minerals and Industry
Research Triangle Park, N.C. 27711

Prepared for

U.S. ENVIRONMENTAL PROTECTION AGENCY
Office of Research and Development
Washington, D.C. 20460

Environmental Protection Agency
U.S. Environmental Protection Agency
Region 5, Library (PL-12J)
77 West Jackson Boulevard, 12th Floor
Chicago, IL 60604-3590

ABSTRACT

This technical manual lists and describes the instruments and techniques that are available for measuring the concentration or size distribution of particles suspended in gaseous process streams. The standard, or well established methods are described as well as some experimental methods and prototype instruments. To the extent that the information could be found, an evaluation of the performance of each instrument is included.

The manual describes instruments and procedures for measuring mass concentrations, opacity, and particle size distribution. It also includes procedures for planning and implementing tests for control device evaluation, a glossary, and an extensive bibliography.

ENVIRONMENTAL PROTECTION AGENCY

CONTENTS

	Page
Abstract	ii
Figures	vi
Tables	xi
Acknowledgement	xii
1. Introduction	1
2. Mass Concentration	2
Filtration	2
Introduction	2
EPA Test Method 5	3
Nozzle	4
Probe	7
Pitot Tube	7
Particulate Sample Collector	8
Gaseous Sample Collector	8
Sampling Box	9
Meter Box	10
Performance	10
ASTM - Test Method	14
ASME Performance Test Code 27	15
Isokinetic Sampling	17
High Volume Samplers	18
Filter Materials	20
Summary	22
Process Monitors	23
Introduction	23
Beta Particle Attenuation Monitors	24
Instrument Development	26
Performance	29
Summary	33
Piezoelectric Mass Monitors	33
Performance	39
Temperature	40
Humidity	40
Particle collection characteristics	41
Linear response limit	42
Considerations for stack application	43
Summary	44

CONTENTS (CONT)

	Page
Charge Transfer	46
Instrument Development	46
Performance	48
Summary	50
Optical Methods	51
Conventional Transmissometers	51
Summary	58
Other Optical Methods	58
Multiple-wavelength transmissometers	58
Light scattering	62
Other Methods	78
3. Opacity	80
4. Particle Size Distributions	93
Established Techniques	93
Field Measurements	93
Aerodynamic Methods	93
Cascade impactors	94
Cyclones	109
Optical Particle Counters	118
Diffusion Batteries with Condensation Nuclei Counters	126
Electrical Mobility	134
Laboratory Measurements	140
Sedimentation and Elutriation	140
Centrifuges	143
Microscopy	145
Sieves	151
Coulter Counter	153
New Techniques	153
Low Pressure Impactors	153
Impactors with Beta Radiation Attenuation Sensors	155
Cascade Impactors with Piezoelectric Crystal Sensors	158
Virtual Impactors	160
Optical Measurement Techniques	163
Hot Wire Anemometry	170
Large Volume Samplers	171
5. Control Device Evaluation	173
Objectives of Control Device Tests	173
Type and Number of Tests Required	174
General Problems and Considerations	176
Plant Location	177
Laboratory Space	177
Sampling Location and Accessibility	177
Power Requirements	178

CONTENTS (CONT)

Type of Ports..... 178
Flue Gas Velocity and Nozzle Sizes..... 178
Duct Size..... 179
Gas Temperature and Dew Point..... 179
Water Droplets and Corrosive Gases..... 180
Volatile Components..... 180
Process Cycles and Feedstock Variations..... 181
Long and Short Sampling Times..... 181
Planning a Field Test..... 182

6. Summary..... 184
References..... 186
Glossary..... 206
Bibliography..... 218

FIGURES

Number		Page
1	The EPA Method 5 particulate sampling train.....	5
2	ASTM type particulate sampling train.....	16
3	Schematic flow diagram of a typical RAC Automatic Stack Monitor System installation. (Drawing not scale.) Used by permission.....	28
4	Schematic system for transducing particle mass using quartz crystal oscillator. After Sem, et al.[53].....	35
5	The thickness-shear mode of oscillation for a quartz crystal. After Sem, et al.[53].....	36
6	Piezoelectric microbalance electronic block diagram. After Sem, et al.[53].....	36
7	Two types of particle collectors for piezoelectric monitors.. A. Electrostatic precipitation. B. Impaction. After Daley and Lundgren.[56].....	38
8	A possible stack sampling system using a proposed double sampling diluter and a piezoelectric microbalance sensor. After Sem, et al.[53].....	45
9	Opacity of smoke plumes containing particles of different sizes and refractive indexes as a function of their mass concentration. After Connor.[71].....	52
10	Opacity-mass concentration relationship of laboratory generated coal-fired power plant emissions with different particle sizes. After Connor.[71].....	54
11	Correlation data between opacity and mass measurements of particulate matter in emissions from a coal-burning power plant. After Nader.[79].....	56
12	Opacity-mass concentration relationship for particulate emissions from a cement plant kiln. After Buhne and Duwel.[75].....	57

FIGURES (CONT)

Number		Page
13	Opacity - mass concentration relationship for various industrial sources. After Reisman, et al.[78]	59
14	Mean extinction coefficient as a function of the phase shift parameter $\rho_{vs.}$. After Dobbins and Jizmagian.[80]	60
15	Results of monochromatic vs. white-light optical density measurements made on sludge incinerator emissions. After Reisman, et al.[78]	63
16	Scattering function vs. particle radius for several refractive indices. After Quensel.[83]	65
17	Optical assembly diagram of a nephelometer used in stack monitoring. The scattering angle θ, for any light ray from the source, is the angle between the ray and the horizontal line a. From Ensor and Bevan.[85]	66
18	Mass correlation data taken with the Plant Process Viscometer at the inlet and outlet of a particulate scrubber on a coal-fired utility boiler. After Ensor, et al.[88]	68
19	Effect of particle size distribution on particle volume concentration/scattering coefficient. From Ensor, et al.[88]	69
20	Optical diagram of the PILLS V instrument. From Schmitt, et al.[91]	70
21	Theoretical response of PILLS V vs. particle size. Calculations for log-normal size distributions with geometric standard deviations of 1.65 and varying number mean diameter. From Schmitt, et al.[93]	72
22	Schematic of Laser-TV Monitor. After Tipton.[96]	77
23	Schematic of a transmissometer showing projection and viewing angles which must be no greater than 5° for EPA compliance	82
24	A typical double pass in situ transmissometer design. After Nader.[79]	83

FIGURES (CONT)

Number		Page
25	A single pass transmissometer design. After Haville[103]	85
26	Effluent transmittance vs. in stack transmittance for varying ratios of stack exit diameter to in stack path length: A = 1/4, B = 1/2, C = 3/4, D = 1, E = 4/3, F = 2, G = 4. After Nader.[105]	87
27	Particle extinction coefficients for various aerosols over three scattering regions: Reyleigh, Mie, and Geometric	90
28	Schematic diagram, operation of cascade impactor	95
29	Approximate relationship among jet diameter, number of jets per stage, jet velocity, and stage cut point for circular jet impactors. From Smith and McCain.[123]	97
30	Design chart for round impactors. (D_{50} = aerodynamic diameter at 50% cut point.) After Marple.[112]	98
31	Schematics of five commercial cascade impactors	105
32	Calibration of an Anderson Mark III impactor. Collection efficiency vs. particle size for stages 1 through 8. After Cushing, et al.[117]	108
33	Hypothetical flow through typical reverse flow cyclone	110
34	Comparison of cascade impactor stage with cyclone collection efficiency curve	112
35	Series cyclone used in the U.S.S.R. for sizing flue gas aerosol particles. From Rusanov.[132]	114
36	Schematic of the Southern Research Institute Three Series Cyclone System	115
37	Comparison of Southern Research Institute Three Series Cyclone System data with cascade impactor curve. After Gooding.[134]	116
38	The EPA/Southern Research Institute Five Series Cyclone System	117

FIGURES (CONT)

Number		Page
39	Laboratory calibration of the EPA/Southern Research Institute Five Series Cyclone System. (Flow rate of 28.3 ℓ/min, temperature of 20°C, and particle density of 1 g/cm^3.)	119
40	Schematic of the Acurex-Aerotherm Source Assessment Sampling System (SASS)	120
41	Schematic of an optical single particle counter	121
42	Experimental calibration curves for two optical particle counters. After Willeke and Liu.[136]	123
43	Optical configurations for six commercial particle counters	124
44	A rectangular channel diffusion battery	127
45	Screen type diffusion battery. The battery is 21 cm long, 4 cm in diameter, and contains 55,635 mesh stainless steel screens. After Sinclair.[145]	128
46	Diagram of a condensation nuclei counter. After Haberl and Fusco.[141]	130
47	Diffusion battery and condensation nuclei counter layout for fine particle sizing	132
48	Theoretical parallel plate diffusion battery penetration curves	133
49	Particle mobility as a function of diameter for shellac aerosol particles charged in a positive ion field. K is the dielectric constant of the aerosol particles. After Cochet and Trillat.[155]	135
50	The electric mobility principle	137
51	Schematic of the Thermosystems Model 3030 Electrical Aerosol Analyser. After Sem.[158]	138
52	The Roller elutriator. After Allen.[160]	142
53	The Bahco microparticle classifier	144

FIGURES (CONT)

Number		Page
54	A cut-away sketch of the Goetz Aerosol Spectrometer spiral centrifuge. In assembled form the vertical axes (1) coincide and the horizontal arrows (2) coincide. After Gerber.[164]	146
55	Cross-sectional sketch of the Stober Centrifuge. After Stober and Flachsbart.[165]	147
56	Cross-sectional sketch of a conifuge	148
57	Three diameters used to estimate particle size in microscopic analysis	150
58	Operating principle of the Coulter counter. Courtesy of Coulter Electronics	154
59	Cross section of prototype Mark IV University of Washington Source Test Cascade Impactor	156
60	Sampling train utilizing a low pressure impactor. After Pilat.[176]	157
61	Particle deposition and β-attenuation with a. a continuously moving tape, and b. a stationary tape that is stepped forward periodically	159
62	Virtual impactors (centripeters, dichotomus samplers, stagnation impactors) a. impingement into a stagnant air space; b. opposed axisymmetric jets	161
63	Scattered light intensity versus scattering angle for two spherical particles of equal diameter. The solid curve is for a glassy, non-absorbing sphere and the dashed curve is for an absorbing sphere. After Gravatt.[191]	165
64	A system for collecting large volume samples from industrial process streams. After McFarland and Bertch.[206]	172

TABLES

Number		Page
1	Sampling Systems for Testing by EPA Method 5	6
2	Overall Comparison	20
3	Glass Fiber Filter Products	20
4	Typical Flue Gas Conditions and Operating Variables for CPM Calibration (after Wostradowski [95])	74
5	Linear Regression Results of CPM Calibration Curves for Each Mill (after Wostradowski [95])	74
6	Comparison of Correlation Data with Particulate Characteristics (after Wostradowski [95])	75
7	Relative PILLS V Response as a Function of Salt Concentration and Color of the Extracted Dust Samples from Mill B (after Wostradowski [95])	75
8	Field Test Results. (Results in Grains/Standard ft^3, After Tipton [96])	78
9	Commercial Cascade Impactor Sampling Systems	99
10	Cascade Impactor Stage Parameters, Andersen Mark III Stack Sampler	100
11	Cascade Impactor Stage Parameters, Modified Brink Model B Cascade Impactor	101
12	Cascade Impactor Stage Parameters, MRI Model 1502 Inertial Cascade Impactors	102
13	Cascade Impactor Stage Parameters, Sierra Model 226 Source Sampler	103
14	Cascade Impactor Stage Parameters, University of Washington Mark III Source Test Cascade Impactor	104
15	Characteristics of Commercial, Optical, Particle Counters	125
16	Comparison Table of Common Sieve Series	152
17	Particulate Control Device Tests	183
18	Status of Particulate Sampling Methods for Process Streams	185

ACKNOWLEDGEMENT

Members of the Southern Research Institute staff who helped to write and edit this report are William Farthing, Kenneth M. Cushing, Joseph D. McCain, Charles Feazel, and James Ragland. Don Davis and Michael Myers were the illustrators. Doris Thrower, Ann Billingsley, and Anne Smith prepared the manuscript; and Dorothy Reedy prepared the bibliography. The assistance and cooperation of all are appreciated.

SECTION I

INTRODUCTION

The purpose of this manual is to list and describe the instruments and techniques that are available for measuring the concentration or size distribution of particles suspended in process streams. The standard, or well established methods are described as well as some experimental methods and prototype instruments. To the extent that the information could be found, an evaluation of the performance of each instrument is included. It is not within the scope of this document to train personnel to make the measurements, but to provide a project leader with enough information to select intelligently the methods and instruments to be used.

Section II contains descriptions of instruments and procedures for measuring mass concentrations, Section III is devoted to measurements of opacity, Section IV to particle-size measurements, and Section V specifically to control device evaluation. Section VI is a brief summary of the status of instruments that are in use or under development for sampling particulate matter in process streams. Also, a glossary and extensive bibliography are included.

SECTION II

MASS CONCENTRATION

FILTRATION

Introduction

Particulate mass concentration measurement methods using filtration as the means of sample collection can be classified according to the sampling flow rate used and the location of the filter in or out of the process stream. Low sampling flow rate methods usually sample in the 14.2 ℓ/min (1/2 ft^3/min) to 42.5 ℓ/min (1 1/2 ft^3/min) range. High flow rate methods usually operate above 142 ℓ/min (5 ft^3/min). Use of a filter located outside the confines of the process stream is referred to as an extractive method. Use of the filter located in the process stream is referred to as an in situ method.

Various organizations have promulgated specific procedures and sampling train designs for one or more of these methods. The EPA Test Method 5[1] specifies the use of an extractive sampler. Sampling trains constructed to meet Method 5 specifications were initially designed to operate at flow rates up to 28.3 ℓ/min (1 ft^3/min); but, recently a 113 ℓ/min (4 SCFM) extractive sampler has been developed which (reportedly) complies with the Method 5 specifications. The proposed EPA Test Method 17 specifies the use of in situ sampling.[2] The American Society for Testing Materials (ASTM) specifies an in situ sampler.[3] The American Society of Mechanical Engineers (ASME) Performance Test Code 27 specifies the use of either an in situ or extractive sampler.[4] The ASME will soon be releasing a new Performance Test Code 38 which will supercede the Performance Test Code 27.

The Industrial Gas Cleaning Institute (IGCI Pub. No. 101) and Western Precipitation Company (Bulletin WP50) have also suggested sampling methods.

EPA Test Method 5

Official performance testing of stationary sources for particulate emissions must be conducted with the EPA Test Method 5 "Determination of Particulate Emission from Stationary Sources".[1] The stationary sources covered include new steam boilers, incinerators, cement plants, pulp and paper mills, and the like. All states require the use of some form of the Method 5 train for compliance testing. Method 5 relies on the removal or extraction of a dust laden gaseous sample from the duct or stack followed by the subsequent removal of the particles on a filter with concurrent measurement of the sample volume to determine particulate concentration.

With EPA Method 5, one obtains a measure of the average particulate mass concentration for the cross-sectional area of the duct during the time sampling takes place. However, only the particles that are present at or below 120°C are detected. The particulate concentration is expressed in terms of the dry component of the stack gas, excluding the component contributed by water and other vapors. (Regulations in some states include the wet component.) Finally, this concentration is expressed as the concentration that would be present under conditions of standard temperature and pressure.

A sample is removed from the duct by using a prescribed traversing procedure which involves drawing portions of the sample from different points within the duct. This procedure yields, in effect, an approximate integration of collected mass and sample volume over the cross-sectional area of the duct.

Before sampling, however, it is necessary to determine the number of sampling points. EPA Test Method 1 "Sample and Velocity Traverse for Stationary Sources"[5] describes the computations used to determine the number of sampling points for both the velocity traverse and mass sampling traverse. The number of points will depend on the size and shape of the duct. The velocity traverse is performed before the mass sampling traverse using EPA Test Method 2 "Determination of Stack Gas Velocity and Volumetric Flow Rate".[6] The velocity information is used to select the proper nozzle size and to determine the average stack velocity from which the average volumetric flow rate is determined. The average volumetric flow rate along with the average particulate concentration obtained by Method 5 is used to determine the average mass emission rate.

Method 5 requires that isokinetic sampling conditions be maintained. Thus, at each traverse point, the sample velocity at that point is adjusted to equal the gas velocity in the duct.

The Federal Register gives detailed specification for the apparatus comprising the sampling train which must be used to properly conduct a Method 5 test. The sampling train consists of a nozzle, probe, pitot tube, particulate sample collector, gaseous sample collector, sampling box, and meter set; refer to Figure 1. The user can either construct his own sampling train by following the specifications[7] or he can use one of the many commercial models available (see Table I).

Nozzle--

The nozzle removes the sample from the gas stream and has several restrictions to its use. It should disturb the gas flow as little as possible, or the sample will not be representative. A thin wall, sharp edged, nozzle disturbs the flow the least. The nozzle should be of a size to permit isokinetic sampling and

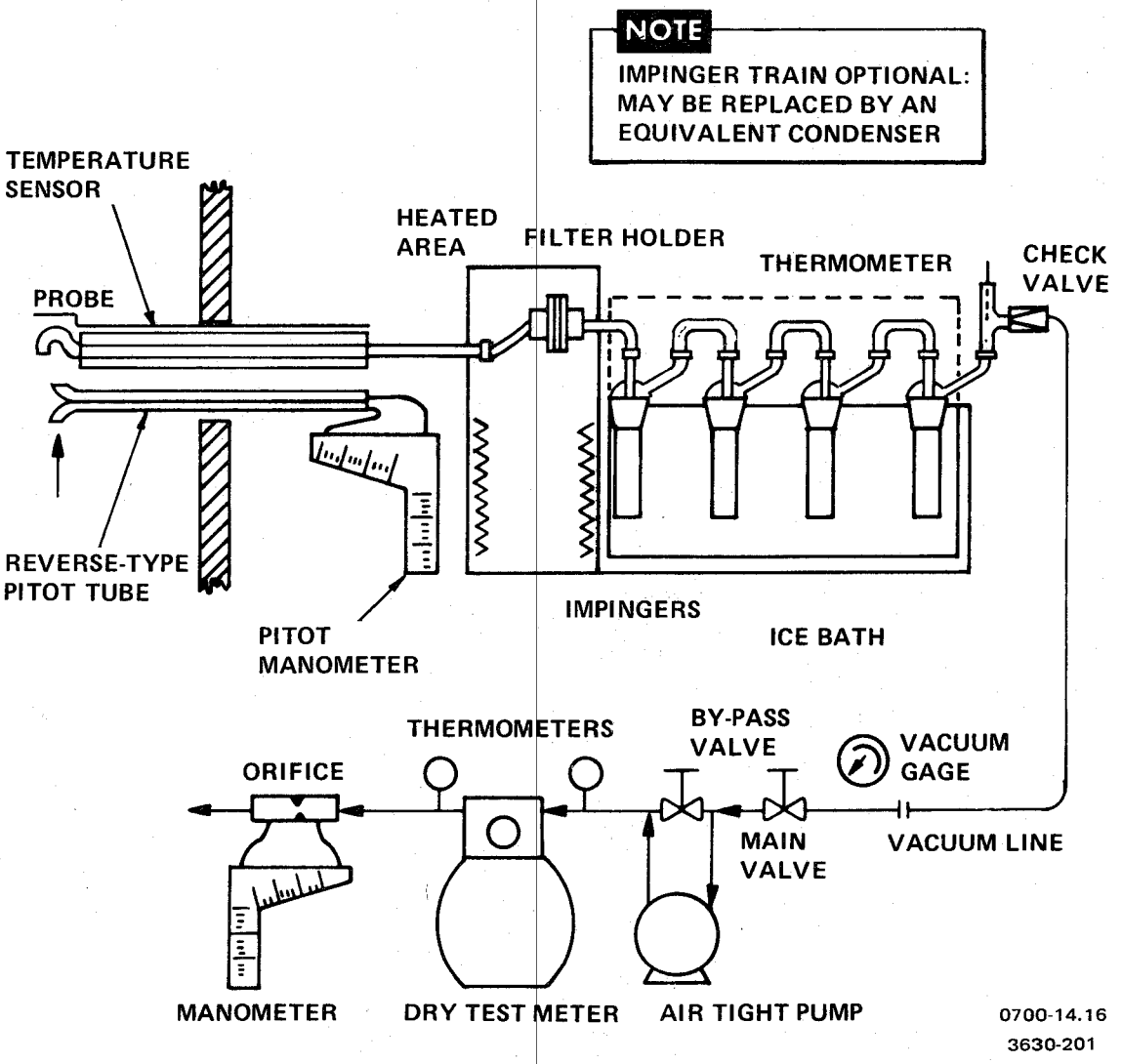

Figure 1. The EPA Method 5 particulate sampling train.

TABLE I. SAMPLING SYSTEMS FOR TESTING BY EPA METHOD 5

Company	Address	Train Title
Aerotherm-Acurex	485 Clyde Avenue, Mountain View, CA 94042	High Volume Stack Sampler
Glass Innovations, Inc.	P.O. Box B Addison, NY 14801	The Source Sampler
Joy Manufacturing Co.	Commerce Road Montgomeryville, PA 18936	Emission Parameter Analyzer
Lear Siegler, Inc./ Environmental Technology Div.	One Inverness Dr. East Englewood, CA 80110	PM100 Manual Stack Sampler
Misco International Chemicals, Inc.	1021 S. Noel Avenue Wheeling, IL 60090	Stack Source Sampler
Research Appliance Company	Pioneer and Hardies Rd. Gibsonia, PA 15044	Staksamplr
Scientific Glass & Instruments, Inc.	7246 Wynnewood Houston, TX 77001	Stack-O-Lator

Note: Most companies will supply filters for use with their trains upon request.

to allow easy access. A buttonhook nozzle is usually used, since it has the advantage of requiring a minimum porthole size of 6.4 cm (1 1/2 in.). A set of nozzles, 0.32 cm (1/8 in.) up to 1.27 cm (1/2 in.) inside diameter of 0.16 cm (1/16 in.) increments is usually sufficient for routine stack sampling applications.

Probe--

The probe removes the sampled stream from the stack. The major requirement is that it does not significantly alter the sample from stack conditions. The sample temperature may be allowed to fall below the gas temperature in the duct, and the filter box can be no hotter than 120°C±14°C; except for fossil fueled power plants, where the maximum is 160°C. If the aerosol temperature falls too low, water and other condensible vapors in the sample stream begin to condense, which quickly leads to clogging of the filter media. Method 5 stipulates the use of heat resistant glass sampling lines for probes less than 2.5 meter (8 ft.) in length. Glass probe liners, as compared to metal probe liners, are desirable because of the ease and completeness with which glass can be cleaned and because glass is chemically inert. However, to prevent breakage in lengths over 2.5 meters, Method 5 permits the use of approved steel probes. New regulations require a thermocouple to be attached to the probe end for monitoring the stack gas temperature.

Pitot Tube--

A pitot tube is attached to the probe to monitor the gas velocity. A pressure drop, which is generated by the gas velocity in the duct, is monitored to insure isokinetic sampling velocities. Method 5 specifies a Stausscheibe type, also called the S-type or reversed pitot. This pitot is used instead of a standard type (Prandt) because of the clogging tendency of the standard type

in heavy dust laden streams. The S-type has two main advantages: it is easy to construct and, because of its design, it shows a larger difference in pressure for the same gas velocity, than the standard. At extremely low or high velocities, the pitot method is inaccurate and unreliable. Calibration of a properly constructed S-type pitot tube is not required.

Particulate Sample Collector--

The glass fiber filter should be at least 99.95% efficient for collection of 0.3 micron dioctylpthalate smoke particles. It must also be inert to chemical reactions. There are sometimes problems with unknown efficiency characteristics of the glass fiber filter. Method 5 requires a filter efficiency test to be performed, unless the test data from the suppliers quality control program indicates that the filter has sufficient collection efficiency.

The cyclone, which is available with many commercial trains, is not required by Method 5. Its use results in the removal of larger particles, thus allowing for longer sampling times by preventing early blocking of the filter.

Gaseous Sample Collector--

Gas absorbers are generally called impingers or bubblers. There are four impingers in the Method 5 sample train. They remove the water, gases, vapor and condensible particulate matter and allow the moisture content of the gas stream to be determined. Condensible particulate matter is defined as that which is formed by either coalescing of ultrafine particles or by condensation of gases upon temperature reduction. All impingers are of the Greenberg-Smith type. The first impinger cools the hot gases and provides for some gas absorption/condensation. The second impinger is for fine particulate removal and final gas absorption.

The third impinger is a dry type used to collect any carryover from the previous impingers. The last impinger contains silica gel for the final removal of all water vapor. By removing the water vapor, the silica gel serves to protect the working parts of the vaccuum pump and dry gas meter. There are two other items in the impinger train for the protection of the metering system and sample. The first is a thermometer so that the temperature of the exit gas from the bubblers can be kept low enough to protect the metering system. The second item is a check valve which primarily protects the sample by preventing any backflow through the sample. When the filter becomes loaded, a partial vacuum is created between the filter and impingers. If a check valve is not used, or if the valve sticks when the pump is turned off, the water in the first bubbler can be drawn back up into the filter holder. Also, if the stack is at a significant negative pressure, the vacuum created between the filter and the stack would add to the vacuum created by the loading effect and could result in a ruptured filter.

The EPA and some states do not require the measurement of the condensible particulate fraction and hence the impingers are not specifically required. The fragile glass impinger train may be replaced by a suitable condenser. The condenser may be as simple as a piece of coiled tubing immersed in an ice bath. The condenser should be followed by a silica gel drying tube to collect the remaining moisture and protect the vacuum pump and dry gas meter.

Sampling Box--

The sampling box serves to hold the probe, the filter holder, the impinger train and its ice bath. The filter holder is contained in a heated area of the sampling box and must be kept below 120°C±14°C. These areas must be well insulated and water tight. There are many choices of sample box supports available

with commercial sampling trains. Several use an overhead rail-type support while others use supports on which the box slides. Where the condensable particulate fraction is not required by state regulation or is of no interest, the sampling box can be simplified.[8] The impingers/condenser, then, can be located remotely from the sampling box, with the connection to the filter made by means of an umbilical cord.

Meter Box--

The meter or control box contains the following items: a vacuum pump capable of maintaining isokinetic flows during heavy filter loadings; a control valve to vary the sample stream flow rate; a vacuum gauge for measuring the sample stream pressure; a dry gas meter equipped with temperature measuring devices at inlet and outlet for determining the sample volume, a calibrated orifice meter which is used to monitor the sample stream flow rate; two pressure gauges, one to measure the pitot tube pressure drop, and the other to measure the orifice meter pressure drop; a variable voltage power supply to maintain the probe and filter box at their respective temperature by means of their individual heaters; and a pyrometer or a potentiometer suitably calibrated for thermocouple measurements of the duct and filter box temperature.

Calibration requirements are discussed in the EPA maintenance procedures.[9] Critical laboratory calibrations include the orifice meter, dry gas meter, and pitot tube. Calibration of the orifice meter and dry gas meter requires the use of a wet gas meter. Various other common laboratory instruments are required for the maintenance and calibration of the other system components.

Performance--

An inherent limitation of the Method 5, indeed, of all stack sampling systems, is the inability to obtain particulate

matter in the same state as it exists when the plume mixes with the atmosphere. This change to atmospheric conditions may result in particulate matter being formed in the plume that was not present in the stack. In its original form, Method 5 also captured the particulate matter that occurred after the sampled gas was quenched in an ice bath and thus it attributed to the plume, particulate matter that, it was expected, did not occur in the actual plume. The present form does not include the impinger catch. Tests were performed that compared EPA Method 5, including impingers with the commonly used alundum thimble method, which followed ASME guidelines, and with the thimble located out of stack. Simultaneous determination of particulate mass concentration were made on the flue gas from a furnace burning about 34.0 kg/hr (75 lb/hr) of low-sulfur lignite to yield dust concentrations of 1.14 to 0.02 gm/m^3 (0.5 to 0.09 grain/SCF). The two methods agreed within 5% at the higher concentration and the impinger residues were not significant. At the low concentration the EPA train yielded values from 50 to 200% greater than the ASME train, and the impinger residues constituted a substantial part of the total weight.[10]

The performance of the Method 5 has been compared with a newly developed dilution source sampling system.[11] This system uses dry atmospheric air to withdraw a sample from a process gas stream and simultaneously dilute and cool it with atmospheric air to ambient temperature and pressure in ways that replicate the way actual plumes reach equilibrium with the atmosphere. Tests of the diluter and Method 5 were simultaneously conducted on the exhaust of a coal-fired stoker furnace with over-fired oil. Results from one test showed the dilution sampling system recorded particulate concentration 7.2% larger than that recorded by Method 5. A second test of the diluter and an in-stack impactor showed the existence of submicron particles, that would be emitted to the atmosphere, that were not present at stack gas temperature. Since, for most sources, particularly coal-fired boilers, submicron

particles comprise only a small fraction of the total mass, this occurrence is insignificant when measuring mass concentration. However, fine particles would be important for the characterization of plumes.

A possible problem, one that is just the opposite of the first problem discussed, is the measurement of "false particles" in the sampling process. For example, particles collected early in the run and distributed along the probe walls and in the filter provide a large surface area continually exposed to the fresh sample. There is thus an opportunity for catalytic oxidation of SO_2 and SO_3, physi- and chemisorption of organic vapors on particulate surfaces, or compound conversion; or if cooling of the sample gas occurs, sulfuric acid can condense to an aerosol. A study done on oil-fired boilers indicated that Method 5 procedure does not lead to the formation of false particles for that source, except when the SO_3 concentration and external filter temperature permit condensation of sulfuric acid.[12]

A study performed on glass-fiber filter media did show a reaction between the SO_x component in the process stream and the filter media.[13,14] However, this reaction was found to be active primarily at high process stream temperatures. At 120°C, the Method 5 sampling temperature, the weight gains due to SO_x reaction did not exceed 1 mg for 47 mm diameter filters.

Another problem arises when the humidity of the process stream is high. The sampling flow rate is measured by referring to the pressure drop across the orifice meter after the water vapor has been removed by the impingers. Therefore, the measured volumetric flow rate through the orifice is always less than the actual volumetric flow rate through the nozzle. This may produce an anisokinetic sampling condition. For example, when sampling a stack whose moisture content during sampling shows a 2% drop, from 10% to 8%, an error of approximately 2.2%

will be reflected in the measured volumetric flow rate. But when sampling a stack where moisture content was calculated to be 90% and the average moisture content during sampling shows a 2% drop to 88%, an error of approximately 16.7% will be reflected in the measured volumetric flow rate. Such an error is enough to invalidate the test, as the percent isokineticity will fall outside the 90 to 110% range. An experimental method to overcome this problem is described by Patankar and Ott.[15]

Probe loss studies in the Method 5 probe have shown that deposition of particles in the heated probe ranged from 10% for a 2 μm MMD aerosol to 97% for a 17 μm MMD aerosol.[16] Such high probe deposition indicates the need for consistent, thorough probe washing procedures.

Studies have been performed to determine the precision obtainable with the Method 5 and the clarity of its instructions. A series of collaborative tests were performed by Hamil et al. on fossil fuel-fired steam generators,[17] Portland cement plants,[18] and municipal incinerators.[19,20] A collaborative test involves several laboratories simultaneously conducting tests on a common source. There tests were performed in a "real world" manner; this involves no interaction between collaborating laboratories or outside supervision, which would bias the results.

The results of the collaborative tests are expressed as standard deviations of three principal components:

σ_b - the between-laboratory standard deviation. This represents the total variation in a result, composed of within-laboratory and laboratory bias components. The between-laboratory variance can be written as

$$\sigma_b^2 = \sigma^2 + \sigma_L^2$$

σ - the within-laboratory standard deviation. This represents the ordinary sampling error in replicate runs made at the same mass concentration by the same laboratory team.

σ_L - the laboratory bias standard deviation. This represents the variation that can be expected between two independent laboratory teams determining results at the same mass concentration. This variation is attributable to such factors as different operation, equipment, and analysis.

The most recent collaborative test,[20] performed on an incinerator, produced the following results:

$\sigma_b = 12.1\%$ $\sigma = 10.4\%$ $\sigma_L = 6.1\%$

These estimates were considerably lower than those obtained in the first collaborative tests.[17,18,19] The test study attributed the improved results to the use of more experienced laboratory collaborators, the performance of more frequent calibration checks and rechecks, the revision of the Method 5 sample handling and recovery procedures, more reliable statistics, and the absence of the "high value" effects found in the first collaborative tests. The "high value" effects were thought to be due to the accidental scraping of the particulate matter adhering to the stack wall into the sampling probe tip during the probes' insertion and removal through the sampling port.

ASTM - Test Method

Both the ASTM and the ASME provide specifications for in situ samplers. The ASTM Method is similar to the EPA Test Method 5. The main difference is the use of an instack filter with no restrictions on the sampling flow rate used. However, the

sizes of the sampler components (tubing, filter holder, etc.) usually place an upper limit on the flow rate. With the ASTM arrangement, shown in Figure 2, a thimble-shaped filter is used to sample high mass concentrations. The pitot tube and the other parts are similar to the Method 5 sampler. External heating of the filter by auxiliary equipment is usually not needed. However, the filter should be preheated by locating the filter in the process stream for at least 30 minutes to insure that the temperature of the filter is in equilibrium with the temperature of the process stream. When inserting the filter for preheating, the nozzle must be pointed in the downstream direction of the gas flow. This orientation will prevent pretest collection of particulate matter. Also, when inserting the filter into a duct not at ambient pressure, the sampling lines must be closed in order to prevent undesirable gas flow through the filter.

ASME Performance Test Code 27

The ASME Performance Test Code provides for the use of a variety of instruments and methods.[4] Paragraph 55 of Section 4 of the Code states "Testing experience has not been uniform enough to permit standardized sampler design. This code, therefore, merely gives limiting requirements which past experience has shown desirable to avoid major sources of error". The Code is designed as a source document which provides technically sound options to be selected and agreed upon by the contractor and the contractee who performs the sampling. According to the Code, the sampling device shall consist of a tube or nozzle for insertion into the gas stream and through which the sample is drawn, and a filter (thimble, flat dish, or bag type) for removing the particles. For the purpose of the Power Test Code, 99.0% collection efficiency by weight is satisfactory, and the filter can be made of cotton, wool, filter paper, glass wool, nylon, or orlon. The filter can be an extractive or in situ filter, however, the extractive filter is used much of the time.

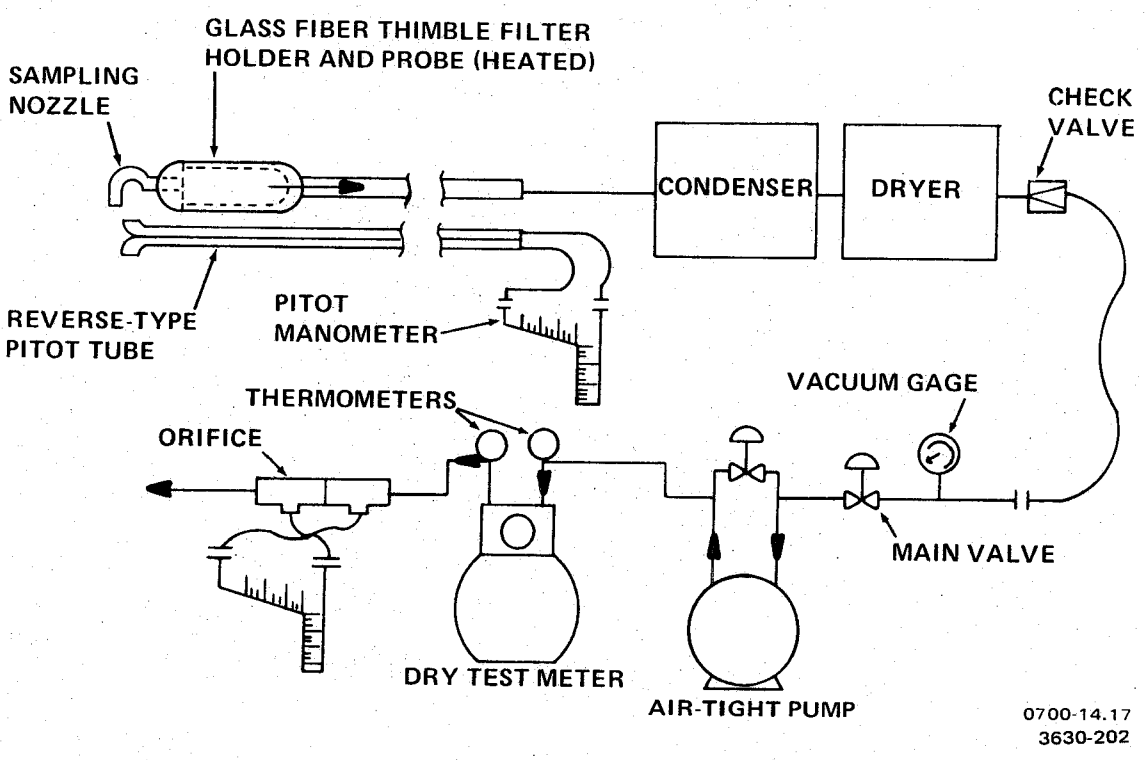

Figure 2. ASTM type particulate sampling train.

Isokinetic Sampling--

Also required is a means of checking the quality of the velocity of the gas entering the nozzle and the velocity of the gas in the flue at the point of sampling. This can be performed by use of a pitot tube traverse before the sampling is performed. Then the appropriate sampling flow rate can be calculated for each point. If the process stream velocity is not constant, pitot tube measurements should be performed during sampling to insure isokinetic sampling conditions. Or, in the case of variable process stream velocities, a null type nozzle can be used in place of the pitot traverse. A null type nozzle operates on the principle that isokinetic sampling exists when the static pressure in the duct is equal to the static pressure inside the sample stream.

A method to measure the quantity of gas sampled and a pump to draw the sample is needed. Provisions should be made to heat the filter when used extractively.

Both the EPA Method 5 and the ASTM Method comply with the ASME Method.

Performance tests have compared the in situ ASME Method with the EPA Test Method 5. These tests produced conflicting results.[21] Other comparative studies were conducted by the National Council of the Paper Industry for Air and Stream Improvements.[22] A summary of a company's experience in the measurement of fly ash collector efficiencies and particulate emissions from coal-fired power plants using the ASME Method and modifications to the ASME Method is given in Reference 21.

High Volume Samplers

High volume samplers are designed to gather a relatively large amount of particulate matter in a short period of time. Two commercial versions, one made by Rader Pneumatics Inc., P.O. Box 20128, Portland, Oregon 97220, and the other by Acurex-Aerotherm Corporation, 485 Clyde Avenue, Mountain View, California, represent the state of the art. Rader manufactures both a manual and an automatic sampler. The Aerotherm version meets EPA Test Method 5 specifications and therefore can be used for compliance testing (manufacturer's claim).

The Aerotherm Train includes three nozzles 6.35 mm, 12.7 mm, 19.8 mm (1/4, 1/2, and 3/4 inches) in diameter. The probe can be rotated through 360° for sampling in off-angle ducts, and it can be turned 90° for sampling horizontal ducts from the top. The 142 mm diameter filter is fiberglass and is enclosed in a heated box at the end of the probe. Isokinetic sampling is maintained manually with the aid of nomographs. The gauges for the pitot tube, orifice, and temperature conditions are located in a control unit. The nominal sample flow rate is 113 ℓ/min (4 SCFM). It has four impingers and can be operated at temperatures up to 260°C (500°F).

The Rader unit, a portable, hand-held utility sampler, uses an unheated 20.3 x 25.4 cm (8x10 inch) filter mounted on the probe. Isokinetic sampling can be maintained either manually or automatically. The automatic model has a microprocessor that controls sampling functions, performs calculations, and displays sampling parameter values measured by the sensors. The manual model has the gauges for the pitot tube, orifice, and temperature measurements mounted on the probe. Sampling flow rates up to 1.98 m^3/min (70 ft^3/min) can be achieved and the sampler can be operated in temperatures up to 260°C (500°F). Neither model has impingers or condensers to recover the water vapor in the sample stream.

The Rader unit has been used to measure emissions from hog fuel fired boilers, a bark burning boiler, a bark and wood fired incinerator, wigwam burners, an asphalt batching plant, a seed cleaning plant, and a filter-cyclone system handling wood fiber.[23] The Rader Hi-Volume sampler was compared against the "standard" Method 5 train, which included the impinger catch (back half), and a "modified" Method 5 train which considered only the probe and filter catch (front half).[24] Throughout the test the back half catch totaled from 1.8% to 23% of the total "standard" Method 5 train. The comparison of the overall results is shown in Table II. An overall mean, $\bar{x}$, standard deviation, s, and standard error, $s_{\bar{x}}$, (standard deviation of the mean) for the mass loading are computed from all test runs for each of the sampling methods. The standard deviation and standard errors for the high-volume method are both lower than for the other methods. This might be at least partially attributed to the number of samples (runs) per test collected by the different methods. Both Method 5 results were determined from two samples collected each day - one in the morning and one in the afternoon. The high-volume method had a maximum of 8 and a minimum of 4 samples taken per day, making the statistics more reliable, and, consequently, the standard deviation and standard error would tend to be lower for the high-volume method.

A portable, lightweight, intermediate-volume sampler with a filter area of 129 cm^2 (20 sq. in.) has also been developed. The instrument samples in the .09 to .68 m^3/min (4 to 29 CFM) range with resulting nozzle sample velocity matching the 25-250 cm/sec (10-100 fps) velocities normally encountered in stacks. A high temperature O-ring seal control external leakage. Field test measurements with the sampler demonstrated a 94% correlation with standard methods.[25]

TABLE II. OVERALL COMPARISON

	$\bar{x}$ (gr/SDCF)	s (gr/SDCF)	$s_{\bar{x}}$ (gr/SDCF)
High Volume	.199	.064	.024
Method 5	.202	.080	.030
Modified Method 5	.182	.071	.027

Filter Materials

Filter materials for use in mass collection equipment are available from scientific equipment supply houses in several different shapes, sizes, and compositions. Although membrane, teflon fiber, cellulose, metal-alloy, quartz, and ceramic filters are available, the most widely used for stack sampling is the glass fiber filter. A list of glass fiber filters commonly used in air pollution studies is given in Table III. This list is not exhaustive. For a particular test, a filter should be chosen considering the objectives of the testing program and the characteristics of the sampling environment and equipment. In some sampling programs, a particular filter may be used to avoid specific problems. For example, reaction between the sulfur compounds in a gas and alkaline sites in glass fibers often cause unwanted weight gains. In such a situation, it would be desirable to use a filter that is known to have low sulfur sensitivity, such as Reeve Angel 934 AH.[26]

TABLE III. GLASS FIBER FILTER PRODUCTS

Gelman Type A Gelman Type AE Spectrograde	Gelman Instrument Company 600 S. Wagner Road Ann Arbor, MI 48106
MSA 1106-BH	Mine Safety Appliance Co. 400 Penn Center Blvd. Pittsburgh, PA 15235

TABLE III (Continued)

GF/A GF/C GF/D Reeve Angel 900AF Reeve Angel 934AH	Whatman, Inc. 9 Bridewell Place Clifton, NJ 07014
Balston Microfibre	Balston, Inc. 703 Massachusetts Ave. Lexington, MA 02173

The EPA Method 5 specifies the use of glass fiber filters having 99.95% collection efficiency for 0.3 μm dioctyl phthalate (DOP) smoke particles. The gas velocity, sample conditions, and the size of the filter are not specified, nor is a list of commercial filters meeting the specification provided. However, test data from the filter supplier's quality control program can be substituted for efficiency tests results.[1] Efficiencies of some filters have been measured by Appel and Wesolowski,[27] Elder et al.,[28] Mueller,[29] Lundgren and Gunderson[30,31] and Stafford and Ettinger.[32,33,34]

Thimbles for in situ sampling probes are made by Schleicher and Schuell, Nuclepore, and Flakt, and are available from BGI, Inc., Waltham, MA; SF Air Products, Inc., Old Greenwich, CT; and the Carborundum Company, Knoxville, TN; as well as from the suppliers of ASTM and other sampling trains. A brief survey of thimble holders is given by M. Ellis in the April 1976 issue of Stack Sampling News.

Summary

The major difference between the filtration methods is their requirements concerning the use of in situ and/or extractive sampling. The EPA Method 5 requires extractive; the proposed EPA Method 17 requires in situ; the ASTM Method requires in-situ; and the ASME Method permits both in situ and extractive. Because of the large size of the high volume sampler's filter holders, these devices are not designed for in situ use.

The main advantage of the in situ sampler over the extractive sampler is the fact that substantially all of the particulate matter is deposited directly in the filter; therefore, only a small area needs to be washed. Because the filter is maintained at the stack gas temperature, auxiliary heating of the filter is not needed.

The main disadvantage of the in situ sampler over the extractive sampler is the fact that the in situ sampler is limited to process streams where temperatures do not exceed the limit of the filter medium and holder. In fact, thermal expansion of the filter holder may create gas leakage problems. The instack filter cannot yield data on condensable particulate matter in the plume.

Another difference between the filtration methods is the sampling flow rate(s) used in each method. Sampling trains constructed to meet EPA Method 5 specifications were initially designed to operate at flow rates up to 28.3 ℓ/min (1 ft^3/min); recently, a 113 ℓ/min (4 SCFM) sampler has been developed which complies with EPA Method 5 specifications. ASTM and ASME Methods do not define a flow rate range. Some high volume trains can operate at flow rates up to 1.98 m^3/min (70 ft^3/min).

The main advantage in the use of a high flow rate sampler lies in the fact that the amount of time required to sample a given volume of stack gas is small compared to a low flow rate sampler. In a process stream where the mass concentration is constant, the time required for sampling is markedly reduced. In a process stream where the mass concentration is highly variable, a larger number of high volume runs would be required to obtain a value representation of the same average mass concentration obtainable from one run of the low volume run. Statistically, it is more desirable to obtain several samples of a value than just one sample. For stable streams this will give additional information revealing the precision with which the method has been applied. When using high flow rate extractive samplers the high ratio of sample gas flow rate to probe wall area minimizes errors due to loss of particulate matter on the tubing walls between the nozzle and the filter, minimizes heat losses, and thus helps to prevent the condensation of vapors in the train. The high ratio also can be a disadvantage when cooling of the sample gas stream is required to protect the equipment since auxiliary cooling equipment may be needed.

PROCESS MONITORS

Introduction

The ideal process stream mass monitor would have the following features:

1. The sensing principle used to detect the particles in a gas stream would be a direct measurement of the mass of the particles.
2. The mass sensor would be insensitive to such factors as changes in gas temperature and humidity, corrosive gases, and liquid droplets.
3. The monitor would provide continuous, instantaneous ("real-time") measurements of mass concentration.

4. Since the mass concentration in a process stream often varies within the cross-sectional area of the duct, the ideal monitor would measure the average mass concentration across the entire cross-sectional area of the duct.

5. A monitor with its sensor mounted directly within the gas stream, called an in situ monitor, is generally preferred over the extractive monitor, in which the sample may be altered significantly prior to the measurement.

No monitor currently available has all the above qualifications. The development of process monitors has begun to gather momentum only recently, and much of the performance data pertaining to their operation at various sources and under various conditions has been shown to be contradictory or of limited usefulness. Nevertheless, a process monitor may provide sufficient accuracy for certain applications.

Beta Particle Attenuation Monitors

When beta particles impinge on matter, some are absorbed, some are scattered, and some are transmitted. The reduction in the incident beam intensity is known as beta radiation attenuation. The attenuation is primarily a function of the beta particle energy, the amount of the attenuating matter in the radiation path, and the electron density of the matter. The electron density is the ratio of the atomic number (number of electrons per molecule) to the atomic weight (mass of the molecule). This ratio is essentially the same (between 0.45 and 0.51) for most elements below the very heavy ones. Hydrogen is an exception, but its presence does not usually cause a significant error. Because the electron density for most of the elements is almost the same, beta attenuation is practically independent of the chemical composition of the absorber. Beta attenuation is considered by many engineers and scientists to be a direct measure of mass.

The relationship between the attenuation and the absorbing mass is approximated by the exponential function

$$I/I_o = \exp\left[-\mu_m X\right] \qquad (1)$$

where I_o is the incident beam intensity, I is the transmitted beam intensity, X is the absorber area density in mg/m^2, and μ_m is a function of the maximum energy of the beta particle. For a given absorber, the value of X is increased by increasing the thickness of the absorber. The greater the thickness, the greater the mass area density (mg/m^2) and consequently the greater the electron area density.

Both gases and particulate matter attenuate beta radiation. Therefore, in situ application of beta attenuation as a measurement of mass concentration is not feasible because the mass of gas molecules in a gas stream far outweigh the mass of the particulate matter, and beta attenuation methods cannot discriminate between the two. Consequently, beta attenuation monitoring methods require an extractive sampling system.

The major component of the beta radiation attenuation monitor, or simply beta monitor, is the beta sensor. The beta sensor consists of a beta source and a beta detector. The particles to be measured are placed between the source and the detector. Usually, the particles are collected on a filter tape. The beta radiation passing through the filter tape is measure before the particles are deposited, for a zero measurement, and after particle deposition. The difference in these measurements is a measure of the mass of the particle deposit. Measurement of the air volume from which the particles were collected results in the determination of the particulate mass concentration. After each measurement cycle, the filter tape is advanced to provide a clean spot for particle deposition.

Instrument Development--

Many specific instrument designs using various combinations of beta sources, beta detectors, and particle collection devices have been previously described and tested in industrial and ambient environments. These combinations include a prototype model using a C^{14} source, Geiger Müller (GM) detector, and an electrostatic precipitator collection device;[35] a stack model[36] and a vehicle emissions model[37] which was tested on a stack,[38] using a C^{14} source, GM detector and filter collector; an ambient model using a C^{14} source, proportional counter detector, and filter collector;[39,40] a vehicle emissions model using a C^{14} source, scintillation detector and filter collector;[41] an ambient model using a C^{14} source, GM detector, and impactor particle collector;[42] a stack model using a Pm^{147} source, solid state detector, and filter collector;[43] a stack model using a Pm^{147} source, GM detector, and a combination cyclone-filter collector;[44] and a model using a GM detector and cyclone.[45] The model that uses a cyclone-filter combination is capable of sampling isokinetically on an automatic basis.[44] Lilienfeld has reviewed the application of β-monitors to industrial dust measurements, ambient monitoring, and particle size analysis. His review contains discussions of the principle, problems, and errors associated with the β-technique.[46]

Recent β-monitor systems designed for stack applications include computerized beta monitoring systems. Two such systems are manufactured by RAC Corp., Pioneer and Hardies Road, Gibsonia, PA 15044, and Lear Siegler, Inc., One Inverness Drive East, Englewood, CA 80110

The computerized monitoring systems are composed of the following major units: (1) sampler, (2) particle measurement,

(3) gas conditioner, (4) gas volume measurement, and (5) control and computer units. The RAC unit is shown in Figure 3.

Sampler units consist of a nozzle of suitable size, and a probe, which in the RAC system is fixed, and in the Lear Siegler system is optionally stationary or is motorized for traversing the stack. Probes are generally heated to keep the gas above the dew point. A boundary layer diluter, where provided, conditions gas streams containing high levels of temperature, humidity, or particulate concentration. The diluter adds a controlled volume of dry air into the probe. These systems automatically maintain a constant flow rate; however, at present, they do not automatically maintain an isokinetic flow rate.

The particle measurement unit consists of a heated nozzle or air tight filter holder. The unit also contains the drive and indexing system so that the filter tape can be moved forward and backward for zero and sample counts and for sample collecting. The tape movements are commanded by the computer, and data from the beta counts are stored in the computer memory. The source used is a C^{14} radionuclide with a half-life of 5730 years and a radiating strength of 100 microcuries.

The gas conditioner contains a cooling and dehydrating module to condition the gas before it enters the gas measurement unit. Automatic, periodic back-flushing of effluent sample lines is provided to clean the lines of any residual particles.

The control and computer unit is the main feature that differentiates the computerized beta monitoring systems from their predecessors. In the system, the minicomputer sequences all units as well as individual component functions. It receives measurements of the sample gas parameters, beta counts, and other pertinent data, such as diluter volume. The minicomputer uses this

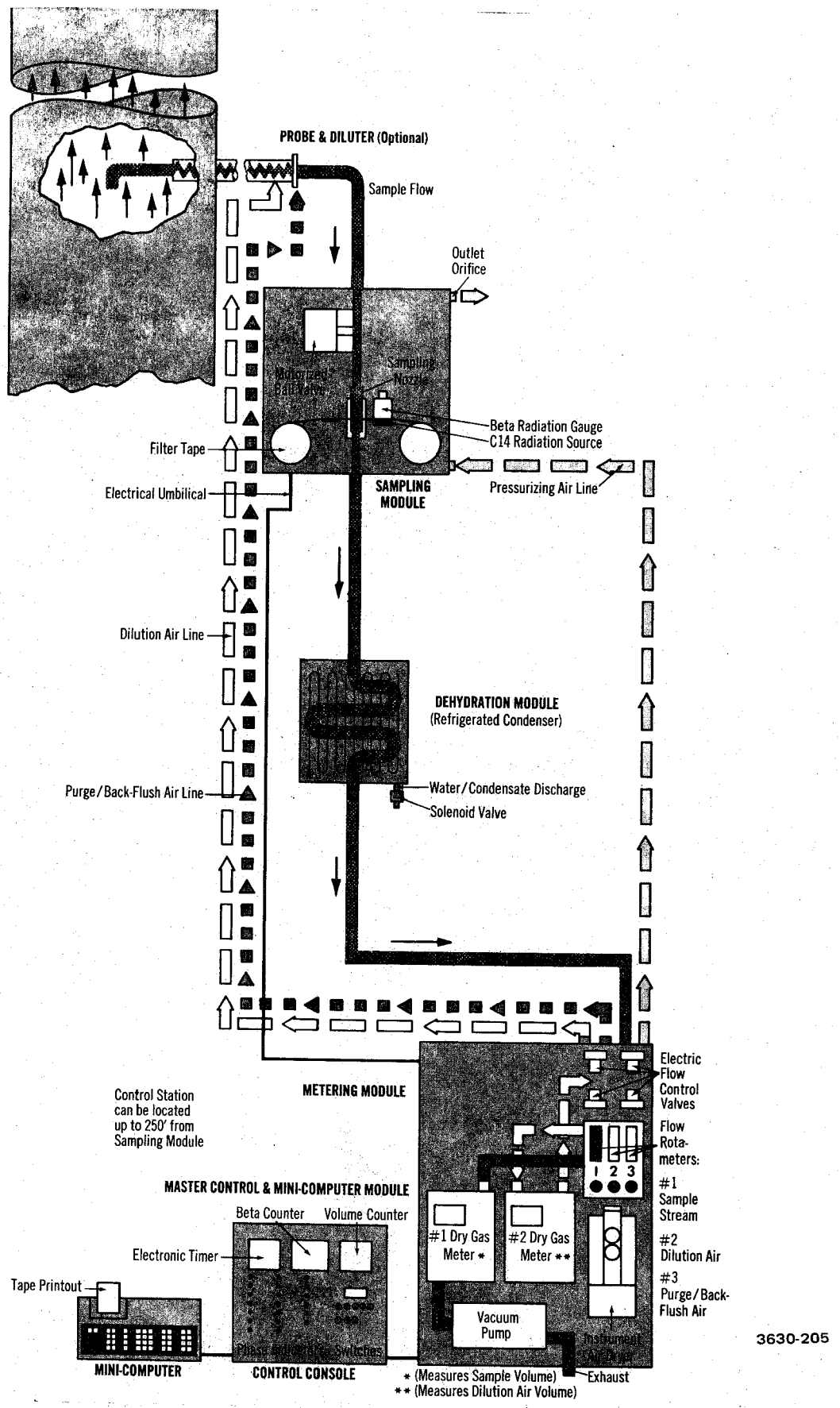

Figure 3. Schematic flow diagram of a typical RAC Automatic Stack Monitor System installation. (Drawing not to scale.) Used by permission.

information and equation 1 to compute the mass concentration for conditions of standard temperature and pressure. The results are furnished on a printed type readout. In the Lear Siegler system, the computer only processes the beta counts to produce a signal proportional to the collected mass. A strip chart recorder is used for the mass readout. Mass concentration must be calculated from the measured flow conditions. Calibration of the monitors is performed in the factory; however, the Lear Siegler system has accommodations for gravimetric calibrations in the field.

Performance--

First it should be noted that very few β-monitors are in service as process monitors, and very little quantitative information is available on their performance.

Possible sources of errors are loss of sample in the probe, variation in filter thickness, nonuniform deposition of dust, losses in filter efficiency, statistics of radiation counting, deviation from the attenuation law (Equation 1), and uncertain flow measurement.

Beta attenuation is not solely dependent on the ratio of atomic number to atomic weight, but is also partially dependent on the atomic number. Because of this dependency and because the atomic number to atomic weight ratio varies between 0.45 and 0.51, the beta monitors are somewhat sensitive to the chemical composition of the absorbing matter. One study compared the absorption characteristics of aluminum and membrane tape and found them to be significantly different.[39] On the other hand, a different study gave data on a variety of absorbers which are in particle form. These included soot, fly ash, cement, dust,

gypsum, and open burning coal. This data indicated that these absorbers have very similar absorption characteristics.[45] There was a 10% uncertainty in the data and therefore this study cannot be considered conclusive.

It has been shown that the geometry of the apparatus (e.g., the source window thickness, the distance from source to detector, filter tape thickness) significantly affects the amount of beta attenuation that takes place for a given absorber thickness. This problem can be partially handled by calibration. One study demonstrated that the variation in thickness of the filter material has a significant effect on the calibration of the sensor.[47] This effect was attributed to the nonexponential character of the beta radiation attenuation. It was calculated that an instrument, using a C^{14} source, that does not take into account the nonexponential character of beta radiation attenuation will yield a mass error of about 8%, assuming that the unknown filter variations are limited to 1 mg/cm^2.

First generation models could be used only in process streams which were less than 170°C, which is the operating temperature of the glass fiber filter tape. The computerized models have a range of up to 538°C (1000°F) with the use of the sample diluter and conditioners.

The computerized models are best used in gas streams which contain particle sizes predominently less than about 5 μm. This is due to the inability of the instrument to sample isokinetically on an automatic basis and probe losses. The monitor using the cyclone-filter combination with automatic isokinetic sampling ability[44] would not have these limitations.

The response time consists of the time required for initial filter tape count, transportation of the filter tape to and from the particle collection location, particle collection, and final filter tape count. The counting and transportation take around 3 minutes in all beta monitors. Particle collection using a filter can take anywhere from 5 to 10 minutes. Particle collection time will depend on the particle concentration of the process stream, minimum mass detection levels of the sensor, and the type of particle collection employed. Monitors using an impactor would require a relatively short collection time due to its ability to deposit particles in a concentrated area on the impaction surface. Models using a cyclone would have a short collection time because of the ability to use high flow rates with a cyclone.

Early experience with first generation monitors showed an accuracy of ±10%, not including the error due to losses in the probe. It included only those errors generated by the instrument alone; such as varying tape thickness, statistical variation in count rate, particle collection efficiencies less than 100%, etc.[45]

Two first generation monitors were tested on a coal-fired power plant.[48] For these tests, the instrument reading was compared with the manually measured gravimetric concentration for concentrations ranging up to 250 mg/m^3. Results yielded correlation coefficients 0.94 for 24 sampling runs of the A monitor with a 22% variation at a 150 mg/m^3 concentration for a 95% confidence level. The B monitor achieved a 0.81 coefficient for 43 sampling runs and a 31% variation.

Two prototype beta monitors (those described in references 37 and 41) were extensively evaluated in a particle sampling facility attached to a coal-fired power plant.[38] The ratio of the mass measured by the instrument to the mass on the independent

reference filter was obtained for many runs. One model gave a ratio of 0.98 with a standard deviation of 0.04. The other model gave a poorer performance with a ratio that varied from 0.43 to 0.61 and a standard deviation that varied from 0.54 to 0.073. The explanation given for this factor of two difference in the measured ratios was attributed to problems within the latter instrument and not in the sampling techniques.[38]

Recent studies on application of beta monitors include coal-fired and lignite fuel power plants, cement plants, and ferro-alloy plants.[36] For the coal-fired power plant, the particle concentration determined by the monitor was compared with the particle concentration determined by weighing the mass deposited on the filter tape. Results produced a confidence range of 30% for the individual measurements and a confidence range of 5% for the mean values. Tests at the lignite-fired power plant compared the instrument's reading with the mass concentration measured gravimetrically up to concentrations of 200 mg/m^3 STP. Results gave a standard deviation of up to 16% for the individual readings. It also was found that after an operating period of three months, no dust could be detected in the probes.

Other data, however, on applications to a ferro-alloy plant, and an oil-fired power plant[49] have indicated probe losses ranging from 30% to 86% of the total catch determined by Method 5. Correlation between the EPA Method 5 and the beta monitor varied from 0.14 to 0.80.

Initial experience with a computerized model that is now installed in several locations has shown that it will function with a variation of only 1 to 5% from values obtained with EPA Method 5.[50] This model offers, as an option, a sample diluter probe consisting of a fixed probe which is filled with a porous inner liner. The dilution air is forced through the walls of

the inner liner and provides an effective boundary layer which minimizes probe deposits and also conditions the sample. A boundary layer interface system for extractive sampling has been developed, which is similar to the diluter probe.[51] There are plans to evaluate this interface system with a beta monitor.

Summary--

Beta monitors of several designs have been tested on industrial sources over the past ten years. Advantages include a sensing principle that is very closely correlated to mass and independent of particle composition, low sensitivity to particle and aerosol parameters other than mass, and a movable filter tape which makes it convenient for performing chemical analysis concurrent with sampling.

Disadvantages include a response time longer than some other monitors, the need for an extraction/dilution system, and a sensitivity to variations in filter tape thickness.

Piezoelectric Mass Monitors

Piezolectricity is a property of certain crystals, such as quartz, which involves the production of an electrical charge on certain faces of the crystal when the crystal becomes mechanically stressed. The converse process also occurs; that is, a piezoelectric crystal becomes mechanically stressed where an electrical charge is placed on certain faces. This two-way capability is responsible for the ability of a piezoelectric crystal to cause an oscillating electric circuit to resonate at the natural vibrational frequency of the crystal.

When foreign material adheres to the surface of a vibrating piezoelectric crystal, the natural frequency of vibration of the crystal decreases. The magnitude of the frequency change is di-

rectly proportional to the mass of the added material. This was first shown theoretically and experimentally by Sauerbrey for thin metallic films.[52] This relationship also holds for any material which sticks to the surface and vibrates with the crystal.

The relationship is:

$$\Delta M = - \frac{A}{2.27 f_0^2} \Delta f \qquad (2)$$

where

ΔM = mass added to the electrode area (μg)
Δf = change in natural vibrational frequency (Hz)
A = electrode area of the crystal (cm^2)
f_0 = natural vibrational frequency of the crystal (Hz)

A schematic of a quartz crystal transducer is shown in Figure 4. The particles are deposited onto the crystal surfaces with a collection device, such as a small electrostatic precipitator chamber or an impactor.

There are four common vibration modes for quartz crystals. Most commonly used in piezoelectric monitors is the thickness-shear mode, which is created by cutting the crystal so that the crystal axes are oriented in such a way that the crystal will vibrate as shown in Figure 5.

A typical piezoelectric monitor consists of the following components as shown schematically in Figure 6.

1. Primary crystal used to sense deposited particles.

2. A particle collector.

3. A pump to draw the aerosol through the collector.

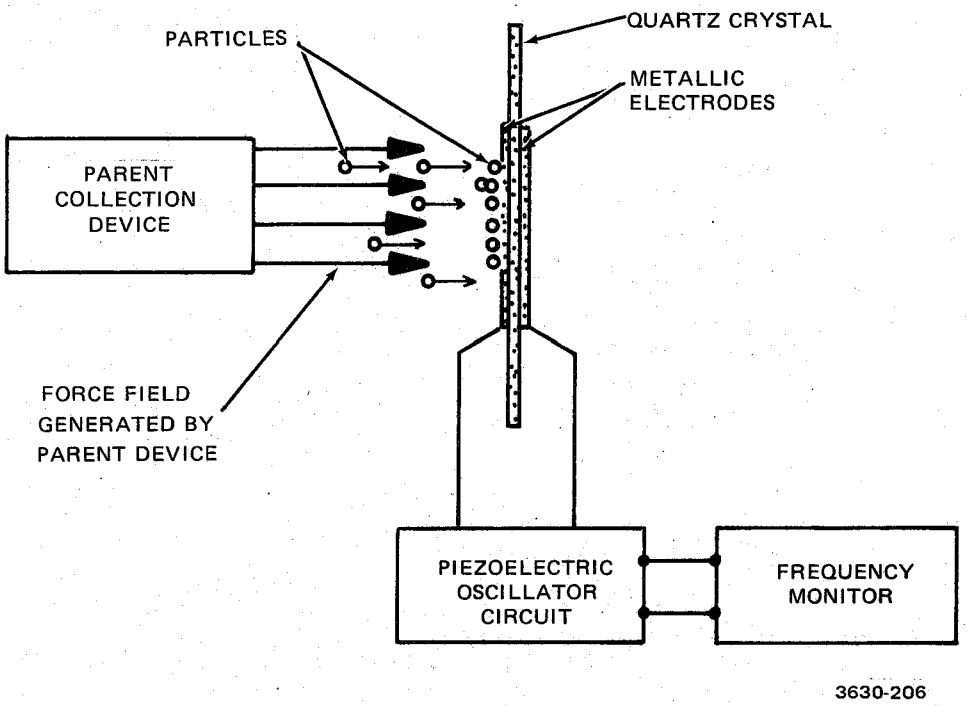

Figure 4. Schematic system for transducing particle mass using quartz crystal oscillator. After Sem, et al.[53]

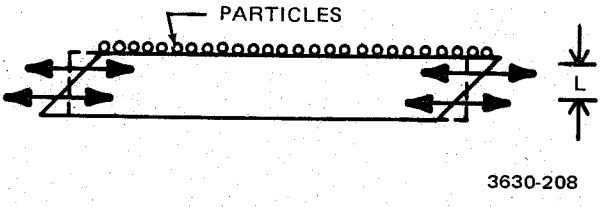

Figure 5. The thickness-shear mode of oscillation for a quartz crystal. After Sem, et al.[53]

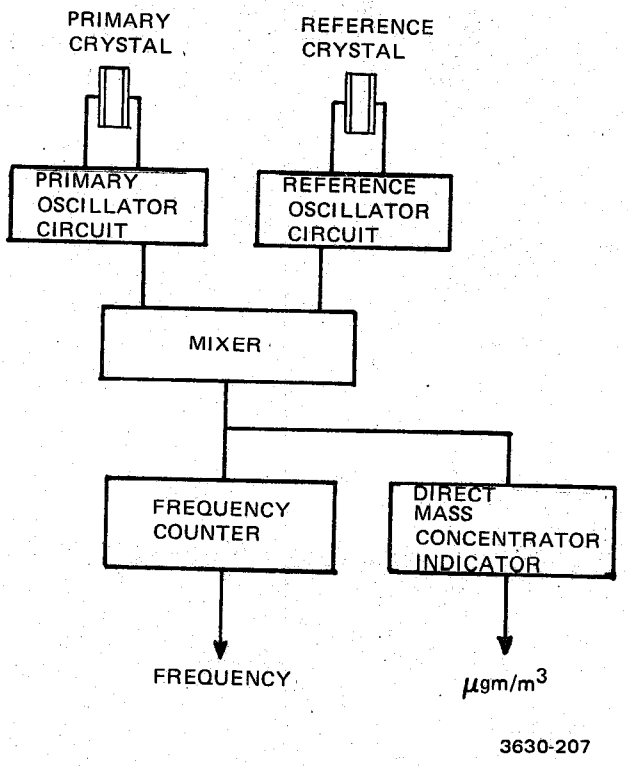

Figure 6. Piezoelectric microbalance electronic block diagram. After Sem, et al.[53]

4. Reference crystal used to subtract out possible frequency changes caused by changes in gas temperature and humidity.

5. Oscillator circuit for both primary and reference crystal.

6. Mixer circuitry to subtract the signals from the two crystals.

7. Digital frequency counter to monitor the mixer output, which is proportional to the total mass adhering to the crystal.

and/or

8. Apparatus to compute and to provide direct readout of mass concentration.

Both precipitators and impactors are used as particle collectors; examples of each are shown in Figure 7. Equation 3 gives the equation relating the mass concentration to the frequency change.

$$C = \frac{1}{SQ} \frac{\Delta f}{\Delta t} \qquad (3)$$

where:

C = mass concentration in $\mu g/m^3$
Δf = change in mixer frequency (Hz)
Q = sampled aerosol flow rate (m^3/sec)
S = $\Delta f/\Delta M$ theoretical mass sensitivity, Equation 2 (Hz/μg).

Thus, the mass concentration is proportional to the time rate of change of the frequency. Direct readout of mass concentration can be achieved by converting the frequency change to a volt-

1. AIR INLET
2. AIR OUTLET
3. TEST CRYSTAL
4. REFERENCE CRYSTAL
5. PRECIPITATOR ELECTRODE
6. AEROSOL-CORONA CONTACT ORIFICE
7. IMPACTION ORIFICE
8. BY-PASS AIR ORIFICES
9. THERMISTER POSITIONS

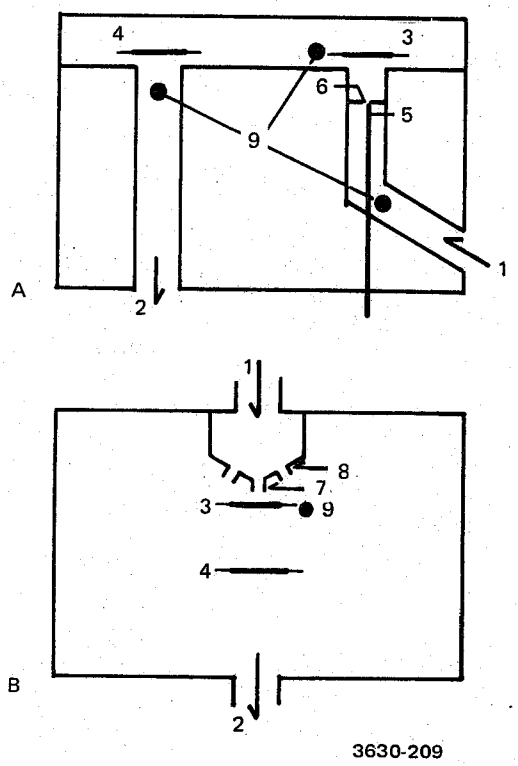

Figure 7. Two types of particle collectors for piezoelectric monitors. A. Electrostatic precipitation. B. Impaction. After Daley and Lundgren.[56]

age. Then, use of circuitry to differentiate the voltage with respect to time will produce a signal proportional to the mass concentration. This signal can be applied to a strip chart recorder.

At least two commercial instruments are available, based on the piezoelectric principle, for monitoring particulate properties. One is a mass monitor manufactured by TSI Incorporated (500 Cardigan Rd., St. Paul, MN 55165). Another instrument is a cascade impactor, discussed in Section 4 of this report. Neither of these devices is designed to operate at mass concentrations as high as those typically found in process streams. The TSI device, however, has been compared to filter methods for measuring the concentration of several aerosol materials, and shown to yield an accurate measure. The most important application of the TSI device is monitoring worker environments for respirable dust concentrations.

Performance--

Most of the work with piezoelectric monitors conducted prior to 1970 focused on thin film measurement and gas concentration measurement. King has noted a list of references which deal with quartz crystal applications ranging from measuring dew points to detection of hydrocarbons and sulfur compounds.[55] These are designed for ambient air monitoring.

Piezoelectric monitors designed for the purpose of monitoring particulate mass concentration in industrial process streams or stacks have not been developed, and the development of an in situ piezoelectric monitor is not forseeable based on the state of current technology. However, it is likely that the ambient piezoelectric monitors will be modified or adapted for stack use, perhaps through the use of improved sample extraction/conditioning

systems. Thus, information pertaining to the performance characteristics of the ambient monitors would provide insight into the problems that are likely to be encountered when extending the ambient monitors to handle process streams. Tests have shown ambient monitors to be sensitive to a number of factors other than mass concentrations, such as, temperature, humidity, particle size, and type of particle collector used. The monitor is not sensitive, per se, to the composition of the particulate matter.

Temperature--Quartz crystals are somewhat sensitive to temperature changes. Because the mass concentration is a function of the time rate of change of the frequency, a time rate of change of the temperature will be measured as an apparent change in mass concentration.

Tests on two monitors, one using an electrostatic precipitator as the collection device and the other using an impactor, showed that temperature changes of 0.3 to 1.0°C/min would produce an error of 5 $\mu g/m^3$. This is usually insignificant when compared with the relatively high mass concentration ranges sampled by the monitors. It was also found that the use of a reference crystal did not compensate for inlet temperature changes because only the test crystal exposed to the temperature fluctuations observed at the inlet.[56]

Humidity--There are two types of errors attributable to changes in the relative humidity. One is associated with the crystal and its electrode, and the other stems from the hygroscopic nature of the aerosol deposit.

It was found that the platinum electrode provided with the electrostatic precipitator collector showed wide variation in humidity response. This variation was due to the corona action on the test electrode. For this unit the problems became severe

for relative humidities above 30%. As with the temperature response, a time rate of change of the relative humidity produced a change in the apparent mass concentration. The hygroscopic character of the aerosol deposit on the test crystal greatly affects the ability of the reference crystal to compensate for relative humidity changes in the air stream. For many materials encountered in ambient aerosol sampling, it was found that relative humidity changes of less than 0.2%/min can cause mass changes that are greater than the change associated with the accumulating aerosol particles.[56] Condensed water vapor would also cause a problem.

Particle collection characteristics--For spherical particles, the mass sensing ability of 5 and 10 MHz AT-cut quartz crystals begins to decrease at a particle diameter of approximately 2 μm and reaches zero at 20 μm. However, good agreement between calculated and experimental sensitivity values for a polydispersed deposit with a 2.5 μm MMD indicated that irregular particles considerably larger than 2 μm are probably sensed when present in polydisperse deposits.[56]

The reason for this lack of sensitivity beyond 2 μm lies in the fact that in order for a particle to be sensed, it must adhere perfectly to the crystal and vibrate with the crystal. As the particle size increases, the ratio of particle adhesive force to inertial forces decrease. Thus, the mass of particles above certain critical sizes will not be sensed with 100% efficiency. The critical size is increased by depositing particles uniformly onto the crystal surface and by minimizing crystal drive level. Application of a thin coat of sticky material to the crystal surface is another method. However, problems can arise with the absorption of gases by the adhesive coatings.

Mass sensitivity is not uniformly distributed over the active area of the crystal. The mass sensitivity is greatest at the center and decreases towards the edge of the active area. In cases where the deposit area is larger than or conterminous with the active area of the crystal, the crystal mass sensitivity $\left(\frac{\Delta f}{\Delta M}\right)$ is constant. However, when the deposit area is less than the active area, the crystal mass sensitivity is a function of the location and size of the deposit.

In tests of the electrostatic collector, it was found that the diameter of the deposit area was 5.3 mm for 0.2 μm diameter particles and decreased to 2 mm for 20 μm particles. This decrease in deposit area size with increasing particle diameter is due to the higher electrical mobility of the large particles.[56] This creates different sensitivities for different particle size deposits. The impactor version had a more constant deposit area diameter for different particle size. The use of an impactor, however, usually results in a large number of small particles (typically <0.5 μm) being lost which are smaller than the cut off point for the impactor.

Linear response limit--Sometime during sampling, a point will be reached when additional mass deposited onto the crystal surface will not be sensed at 100% efficiency and will result in a non-linear response. This is due to the additional particles no longer vibrating in unison with the crystal.

It was found that some material showed non-linearity almost from the start of sampling; this may necessitate very short sampling times. The monitor with the impactor had one typical frequency change vs. accumulated mass curve, whereas, the monitor with the electrostatic collector showed a wide variety of frequency change vs. accumulated mass curves for different particle sizes. The reasons given for this variety of curves for the

electrostatic collector were: agglomeration of small particles on the crystal surface, shifts in the region of deposition due to changes in the electric field caused by the initial annular deposit, and evaporation of volatile compounds under the action of the corona. Concentration-sampling time products which would produce a 20% deviation from linearity were found to be from 100 to 6,000 min•μg/m^3 and 5,000 to 60,000 min•μg/m^3 for the impactor collector and electrostatic collection respectively.[56] It is therefore important to determine the linear response limit by calibrating the piezoelectric monitor with the aerosol to be sampled.

Considerations for stack application--The excessively high levels of temperature, mass loading, and humidity present in process streams and stacks make the ambient monitor unusable for such applications unless the sample is cooled and diluted. Two ambient studies have been performed which tested the performance of ambient monitors.[56,57]

High temperatures tend to increase the crystal temperature coefficient to an unacceptable level. Typical operating temperatures for piezoelectric monitors range up to 66°C (150°F), although it may be possible to increase the operating temperature by the selection of a different crystal cut type. Typical stack temperatures are in the range of 149 to 232°C (300 to 450°F).

Problems with sensing large particles might be alleviated by the use of a low frequency crystal or one with a different vibration mode.

High mass loading results in unrealistically short sampling times. Typical mass loading limits for proper operation of these monitors can range from 2 to 20,000 μg/m^3. Thus, the upper concentration limit of the monitors falls where the mass concentration range usually begins at the outlet of a high efficiency

control device on a process stream. High mass loading could be handled with the use of a proposed double sampling diluter, such as the one shown in Figure 8. In the double sampling diluter, the large sampling probe extracts a sample at isokinetic conditions and at a high flow rate. The required flow rate (usually around 1 liter/min) for the monitor is acquired by a second isokinetic sampling of the first sample. Like all extractive methods, this would suffer from probe losses.

High humidity and temperature conditions could be handled with the use of sample conditioning, such as, the addition of a measured amount of clean, dry air to the sample. An example of such a conditioner is being used with a beta monitor discussed in the section on Beta Attenuation Monitors.

Summary--

Piezoelectric monitors have had no applications in sampling industrial process streams, nor are there any prototype monitors known to be designed for this purpose. However, they have been used for ambient and automobile emissions monitoring and show promise as process stream monitors. Advantages include a sensing principle that relates directly to mass and which is independent of particle composition, and yields continuous, instantaneous ("real-time") measurements.

Disadvantages include a need for an extraction/dilution system, sensitivity to changes in gas temperature and humidity (decreases for particle sizes greater than 2 μm), the necessity of periodic cleaning to prevent non-linear sensor response, and the need for calibration for the aerosol to be sampled to determine the linear response limit.

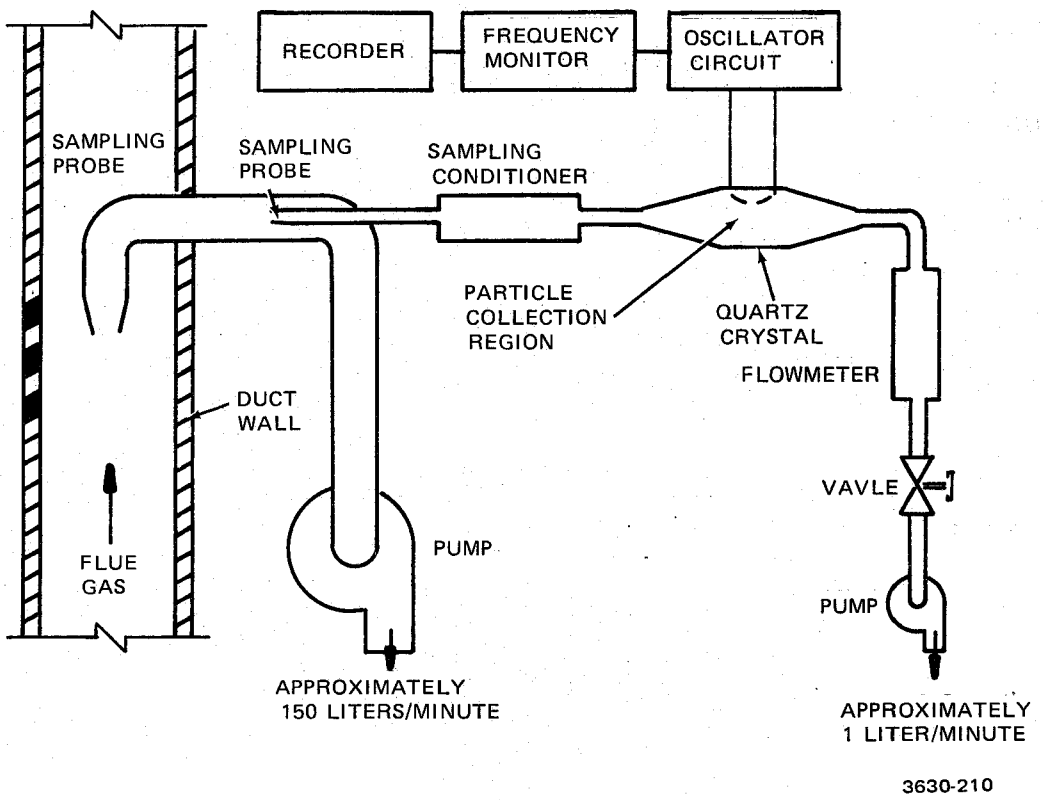

Figure 8. A possible stack sampling system using a proposed double sampling diluter and a piezoelectric microbalance sensor. After Sem et al.[53]

Charge Transfer

The phenomenon of transfer of a negative electric charge is observed when two bodies of different composition come into contact. The transfer can occur during either static contact or triboelectric (rubbing) contact. The mechanism of transfer in static contact is essentially the same for both metals and semiconductors.[58,59] Upon contact, a flow of electrons is initiated due to the different contact potentials of the materials. This flow will continue until the build-up of charge produces an electric potential that is equal and opposite to the difference between these contact potentials. The theory for the static contact charging of insulators is now well developed and the charge transfer mechanism is thought to be different from that of metals and semiconductors. In the charge transfer process, it is not known which type of interaction (static or triboelectric) actually takes place; probably both occur. In the case of insulators particularly, triboelectric effects along with electrolytic effects on the moist surfaces of particles probably play large roles.

Instrument Development--

In all charge-transfer instruments, the aerosol stream is forced to collide with a sensor. When the particles in the aerosol stream contact the sensor a charge is transferred producing a current that is continuously monitored with an electrometer.

The charge-transfer instruments that have been used for measuring the concentrations of aerosols differ mainly in the shape and construction of the sensor. Two instruments, one with a spherical metal sensor, the other with a sensor-in-nozzle design are described by Schütz.[60] The Konitest design of a bullet shaped sensor is discussed by Prochazka.[61,62] Kony Company Ltd, a Japanese concern, has just recently developed an automatic continuous,

dust concentration meter, Konytest (patterned after the German Konitest model) under a technical agreement with Dr. Prochazka of West Germany.[63] No performance data or specifications for this installation are known at this time. An in-stack model has been developed in the USSR.[64] The IKOR Air Quality Monitors (IKOR Inc.) P.O. Box 660, Blackburn Industrial Park, Gloucester, Mass. 01930, use a variety of sensor materials and configurations, depending upon the nature of the particles to be monitored and their gaseous environment. The IKOR instruments are the only instruments commercially available in this country and are available in three models. Models 206 and 207 are extractive; Model 2710 is the newly developed in situ monitor.

Model 206 consists of three components: a probe, a sensor unit, and a control unit. In monitoring, the probe is inserted into the stack, where it simultaneously extracts a continuous sample and measures the stack gas conditions. The sample flow rate is monitored by a venturi attached to the probe. Isokinetic sampling conditions are maintained manually. The sample is conducted through the probe and flexible hose which are both electrically heated, and carried to the sensor unit. Collisions between particles in the gas stream and the sensor produce an electric current that is proportional to the particulate mass flow past the sensor per unit time and is thus a measure of the instantaneous mass concentration. The current is electronically processed to produce an output voltage that is registered on the (particulate) mass flow rate meter. A strip chart recorder provides a permanent record of the output signal with time. An integrator is used to automatically sum the area under the output curve and thus produce a measure of the total transferred charge during the specific period of operation. This total transferred charge can be compared to the filter weight gain during the initial period of operation for purposes of calibration.

Model 207 is essentially the same, except for the Integrator/Test Set, which is incorporated into the control unit. Once calibrated on a particular source, Models 206 and 207 can be operated with or without the filter. Model 2710 consists of a probe with a sensor attached at its end for in situ sampling, and a control unit. No pump is used on the in situ system, thus, the impact velocity of the particle is just the velocity in the dust.

Performance--

There are other factors, beside mass, that can affect the amount of charge transferred to the sensor from particles in any given process stream. Some of the possible factors are the chemical composition of the particles and the sensor material, condition of the sensor surface, particle size, and particle charge. This sensitivity to factors other than mass can result in erroneous readings and frequent need for recalibration. The extent to which these factors affect the instrument's response is discussed in a laboratory study of Model 206 conducted by Walter John[65] and in additional sources such as field test reports[66-70] and company sales literature. The information applies to all models unless stated otherwise.

The sensitivity of the instrument is defined as the amount of charge transferred to the sensor per unit mass, expressed in μCoul/g. John found the sensitivity to be constant for runs in which the total sampled mass of aluminum oxide varied from 10 mg to 100 mg; similar results were obtained for aluminum dust.[65] Field tests also have shown this constant sensitivity for aluminum oxide. The range of mass concentrations employed for these tests is not available. Company sales literature gives the mass concentration range for Models 207 and 206 as 0.000023 g/DNCM (0.00001 gr/SCF) to 23 g/DNCM (10 gr/SCF) and 0.000023 g/DNCM (0.00001 gr/SCF) to 230 g/DNCM (100 gr/SCF) respectively; the 2710 is given

as 0.00023 g/DNCM (0.0001 gr/SCF) to 230 g/DNCM (100 gr/SCF). These values are dependent on actual stack conditions. Actual ranges obtained under typical stack conditions for coal-fired boilers are typically from 0.012 g/DNCM (0.0005 gr/SCF) to 115 g/DNCM (50 gr/SCF).[66,67]

The sensitivity varies with the composiion of the particles and the sensor surface, requiring that the instrument be recalibrated whenever the particle composition changes. John reported the results of sensitivity measurements on 13 different compounds, many of which are found in stack effluents. He found that metals produced the highest sensitivities, followed by semiconductors, then insulators. Metals have the lowest electrical resistivities, semiconductors have higher resistivities, insulators have the highest resistivities. This suggests that the sensitivity is inversely proportional to the electrical resistivity of the particle. This result also can be derived from charge transfer theory. The ratio of highest sensitivity to lowest sensitivity is 60 to 1. This wide range makes the instrument unreliable in process streams which contain variable mixtures of metals, semiconductors, and insulators. Liquid droplets also produce a signal and therefore must be considered. Company literature gives the particle diameter size range of their models as 0.1 to 100 μm, depending on operating conditions.

Tests have shown high sensitivity to submicron particles.[66] John, however, found a complete lack of response to tobacco smoke. He found similar results for a polydispersed and a 0.5-6 μm sample of aluminum and a 0.5-3 μm and a 3-8 μm glass bead sample.

Corrosion will affect the response by changing the chemical composition of the sensor surface, by producing electrochemical reactions, and by breaking down the sensor insulation. The sensors can be obtained in a variety of materials to minimize these

effects. Liquid droplets can cause signal loss through leakage. Smearing of the sensor surface by buildup of wet, oily, or waxy particles will affect the reproducibility of the signal. This can be minimized by keeping the sample temperature at or above the stack temperature and by frequent cleaning of the sensor. In normal operation with discrete, dry particles, a slight accumulation of dust on the sensor is observed, although, presumably, an equilibrium condition is established.

If a particle is charged, as for example by passing through an electrostatic precipitator field, it will transfer its charge to the sensor upon contact, thus producing an erroneous reading. Knapp reported that non-uniformity of charge distributed among the particles in the stack was a problem for in situ devices. In fact, one of the advantages reported for the extractive model was the tendency of the hose to distribute this charge more evenly through collisions of the particles with the hose wall. In one instance, a situation was reported where the in situ model was monitoring the outlet of an electrostatic precipitator on a coal-fired boiler. The device showed a decrease in mass concentration during rapping, instead of the expected increase recorded by the transmissometers.[68]

Model 206 has been tested with an EPA Method 5 train.[69] The results were favorable and indicated good agreement between the two methods. Replicate runs performed at two different aluminum reduction baghouses produced calibration factors with standard deviations of ±3% and ±7.6%.[66] In a test performed on a dry scrubber system, the results obtained with two identical 207 models were in good agreement.[70]

Summary--

Charge transfer monitors have been used on industrial sources for over 14 years. Advantages include in situ or extractive sampling and continuous, instantaneous, real-time measurements. Dis-

advantages include indirect measurement of mass; strong dependence on chemical composition of the particles; sensor sensitivity to particle size (suspected lower size limit), water droplets, corrosive gases, and particle charge; and degradation of sensor performance when exposed to wet, waxy or sticky particles. This last disadvantage would hamper usage at combustion systems fired with residual oil. Sources with electrostatic precipitation present precharging problems, as discussed. In conclusion, the IKOR monitor performs best when applied to the situation where process stream conditions are constant or change predictably, and which contain dry, discrete, uncharged particles.

Optical Methods

Conventional Transmissometers--

The basic function of a conventional transmissometer is to measure opacity. Although opacity alone is not a direct measurement of mass concentration, it can be a good relative measurement if the optical properties and size distribution of the aerosol particles remain constant. In the following discussion, typical results and the necessary considerations are delineated to relate opacity to mass concentration. For a description of the hardware and techniques involved in the measurement of opacity the reader is referred to Section 3 entitled "Opacity".

Light scattering theory predicts a dependence of light attenuation on not only mass concentration but also on particle size and composition. Figure 9 shows the results of applying this theory to calculate the effects of various particle sizes and composition on the relationship between the opacity and mass concentration of aerosols.[71] At particle diameters above 3 or 4 μm the refractive index of the particle plays little role in determining the opacity-mass concentration relationship. However, at particle diameters below 3 or 4 μm, the refractive index plays a major role.

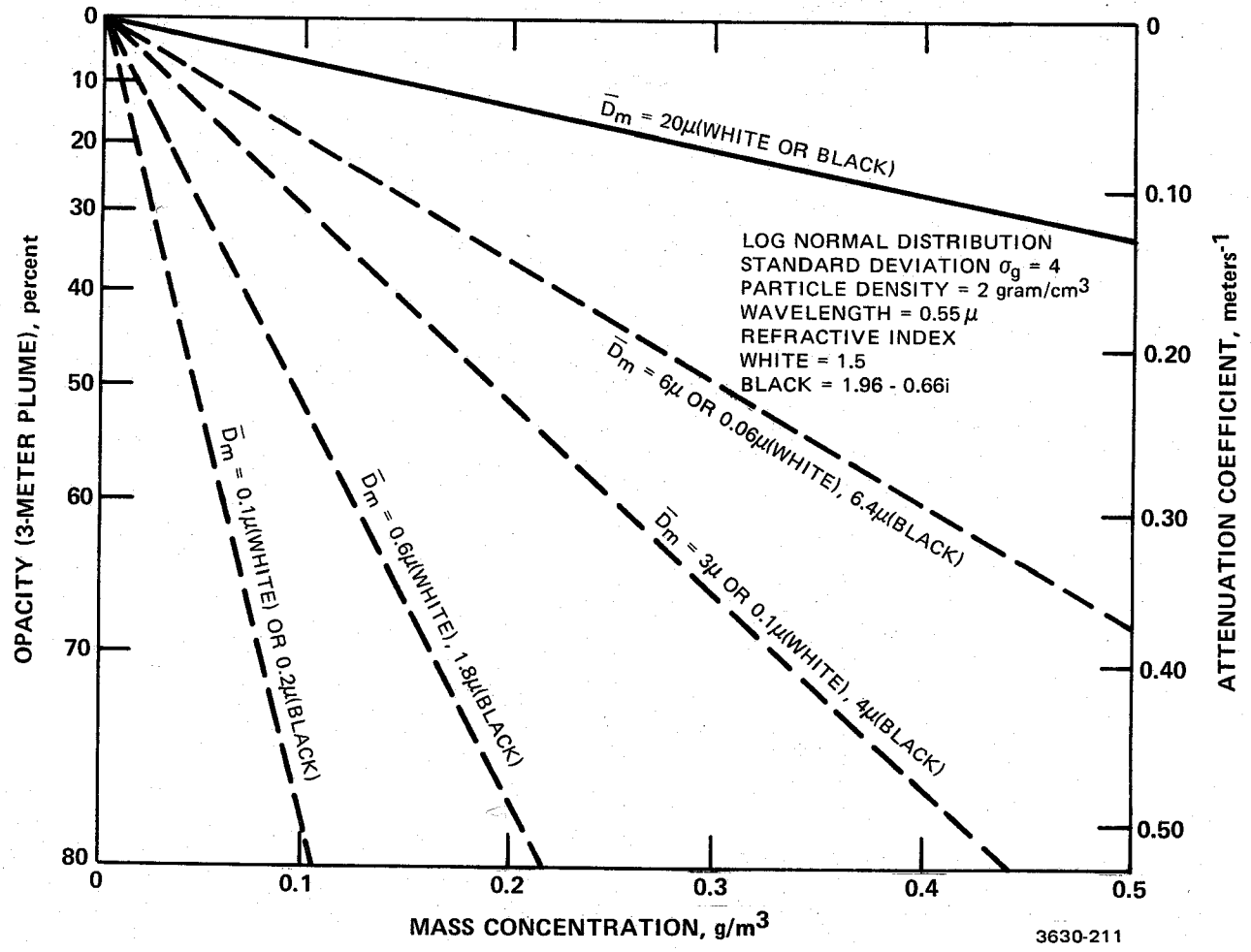

Figure 9. Opacity of smoke plumes containing particles of different sizes and refractive indexes as a function of their mass concentration. After Connor.[71]

The particle size dependency of the opacity-mass concentration relationship has been studied experimentally in the laboratory by Uthe and Lapple.[72] Fly ash from a bituminous coal-fired power plant was collected and then classified into a series of size fractions. These size fractions were pneumatically injected into an aerosol chamber at controlled concentrations which were calculated from aerosol generation rates. The opacity-mass concentration relationship was measured with a transmissometer and is shown for four different particle size ranges (see Figure 10).

Comparison of the fly ash tests with the theoretical calculations presented in Figure 9, shows that, for similar particle sizes, the fly ash attenuated about 50% as much light as the theoretically calculated values for spherical particles with a refractive index of 1.5 and a density of 2 gram/cm^3. This difference can be attributed to differences in aerosol characteristics between the fly ash and the particle properties assumed in the theoretical calculations. The fly ash was reported to have a size distribution with $\sigma = 1.5$ and contained black, absorbing particles; also, the density of 2 gram/cm^3 used in the calculations is low for fly ash.

For a transmissometer to be useful as a monitor of the mass concentration, the properties (other than mass) of the particles being monitored must remain fairly constant over the monitoring period. Experimental data are available showing that good opacity-mass concentration calibration can be obtained on some sources. The sources evaluated include coal-fired plants;[53,58,73] lignite-fired power plants;[74] cement plant;[75] Kraft pulp mill recovery furnace;[76,77] petroleum refinery, asphaltic concrete plant, sewage sludge incinerator, brass smelter, lead smelter, oil fired power plant,[78] and hog fuel boiler.[77]

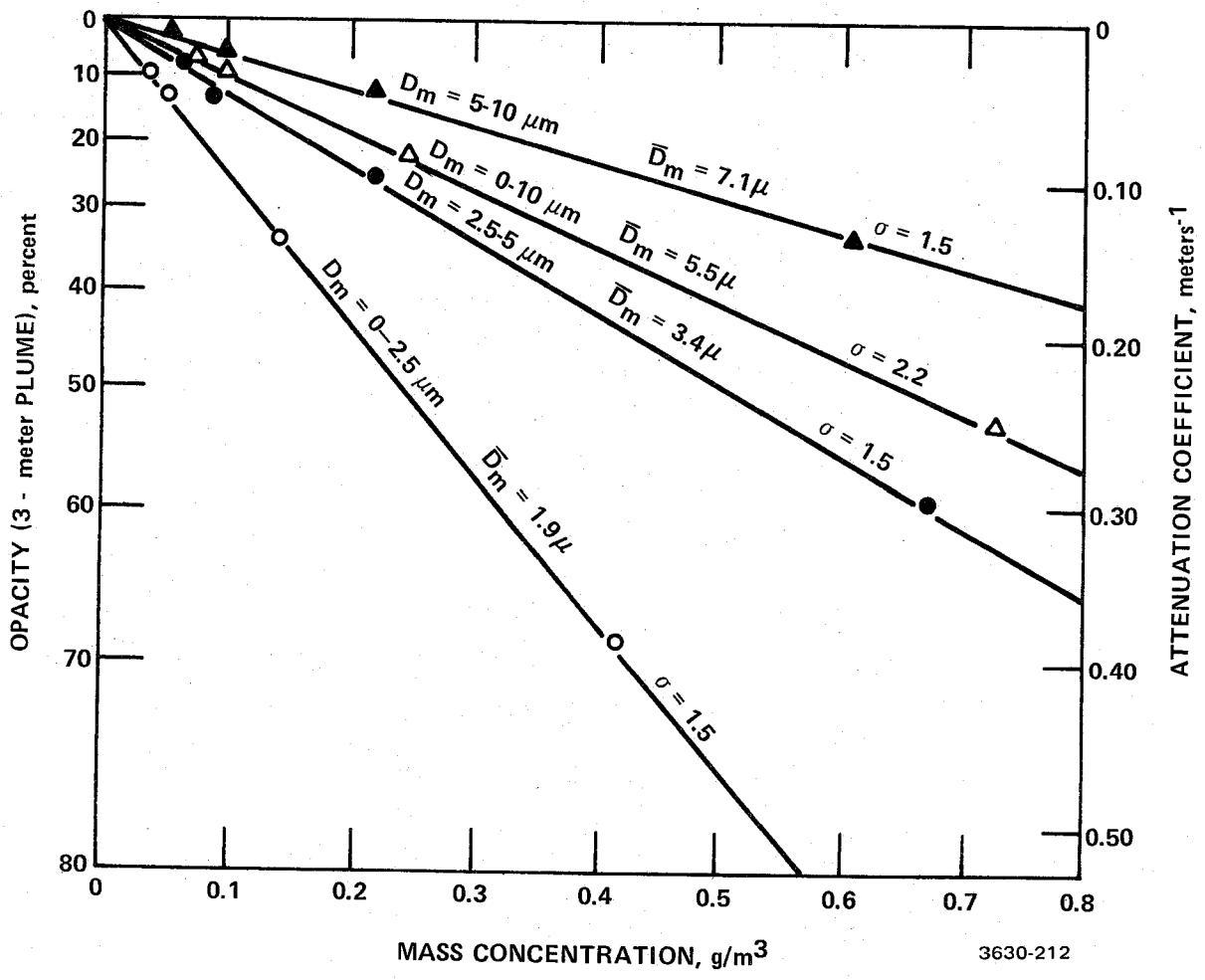

Figure 10. Opacity-mass concentration relationship of laboratory generated coal-fired power plant emissions with different particle sizes. After Connor.[71]

The test results for a normally operating coal-fired power plant gave correlation coefficients for two different instruments at 0.63 and 0.87 for 300 measurement runs, with a measurement tolerance of ±68% and ±39% respectively at a concentration of 150 mg/m^3 and a confidence interval of 95%. The instrument showed different correlation curves for conditions of minimum load operation and operation with and without soot blowing.[48]

Nader reported tests that were performed over one 3-month interval and two 2-month intervals spanning a one-year period representing different seasons of power plant operation.[79] Emissions were increased at various times by cutting off one or more electrostatic precipitator stages. Correlation curves were essentially the same for the three different time periods with coefficients of 0.93, 0.98, and 0.99. The coefficient for the composite correlation curve for the data for all three time intervals is 0.97 (see Figure 11). Mass concentration ranged from 55 to 360 mg/m^3. No problem with window contamination occurred with continuous operation of the transmissometer spanning the one-year period.

Comparative measurements at lignite-fired power plants[74] gave results which were not as good as those obtained at the coal-fired power plant, and showed a different calibration at the beginning and end of a 3-month test period.

Comparative measurements were conducted on emissions from the clean gas duct of a rotary cement kiln with a suspension gas preheater and a subsequent rotary dryer.[75] The results showed that all the operating conditions can be satisfactorily described by the common straight regression line given in Figure 12. The coefficient of correlation is 0.984 and a RMS deviation of correlation of 17 mg/m^3.

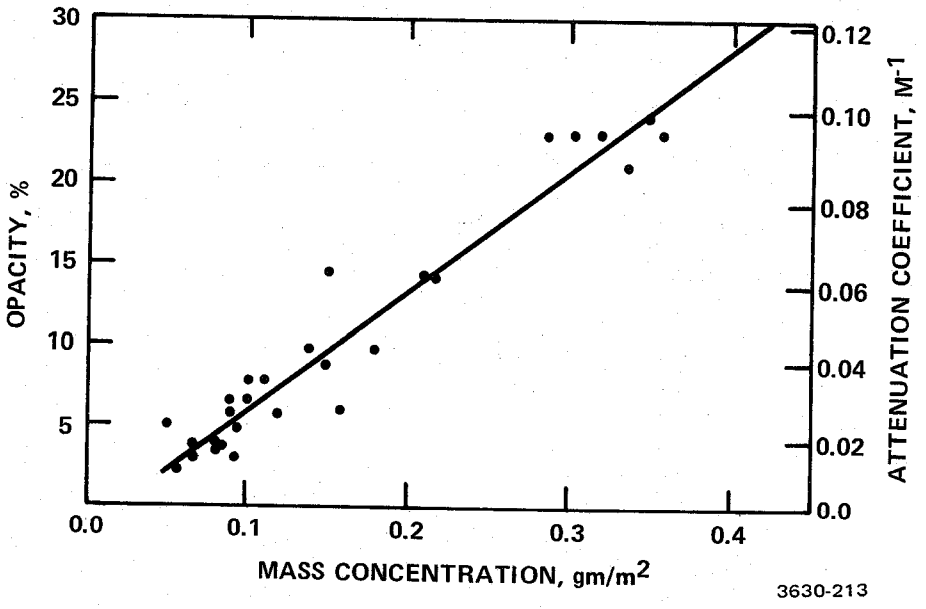

Figure 11. Correlation data between opacity and mass measurements of particulate matter in emissions from a coal-burning power plant. After Nader.[79]

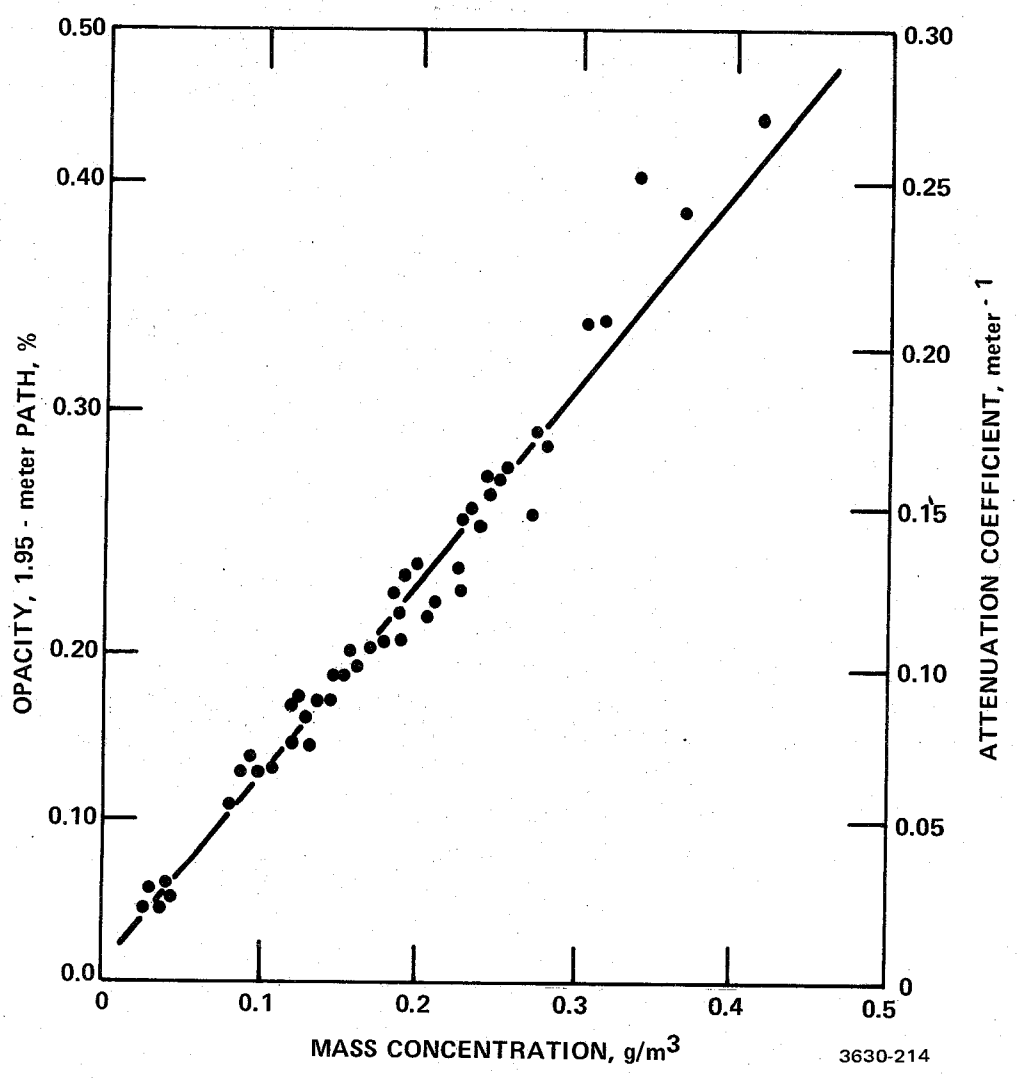

Figure 12. Opacity-mass concentration relationship for particulate emissions from a cement plant kiln. After Buhne and Duwel.[75]

A study was performed downstream of an electrostatic precipitator on a kraft pulp mill recovery furnace. A correlation coefficient of 0.99 was produced for mass concentration of 0.7 to 5 g/m^3.[76]

Opacity-mass concentration measurements[78] are shown for an asphaltic concrete plant, an incinerator plant, a refinery catalytic cracker regenerator, a lead smelter, and a brass smelter, Figure 13.

Summary--Conventional transmissometers are routinely used for providing a qualitative measurement, i.e., where changes in opacity are used as a general indicator of changes in mass concentration. Generally, transmissometers are not relied upon to produce quantitative measurements, i.e., where actual values of mass concentration are obtained. This is due to the uncertainty introduced by the strong dependence of the sensing principle on the particle size distribution and index of refraction. The transmissometer does possess the advantage of being able to provide an in situ, continuous, real-time, integrated measurement. In conclusion, it is unlikely that conventional transmissometers will ever be used for routine quantitative measurement of mass concentration. The multiple-wavelength transmissometer, discussed in the next subsection, is a better candidate because it eliminates the uncertainties caused by variable particle size distribution.

Other Optical Methods--

Multiple-wavelength transmissometers--The general principle underlying the multi-wavelength transmissometer can be seen by referring to Figure 14. In this figure, the mean extinction co-

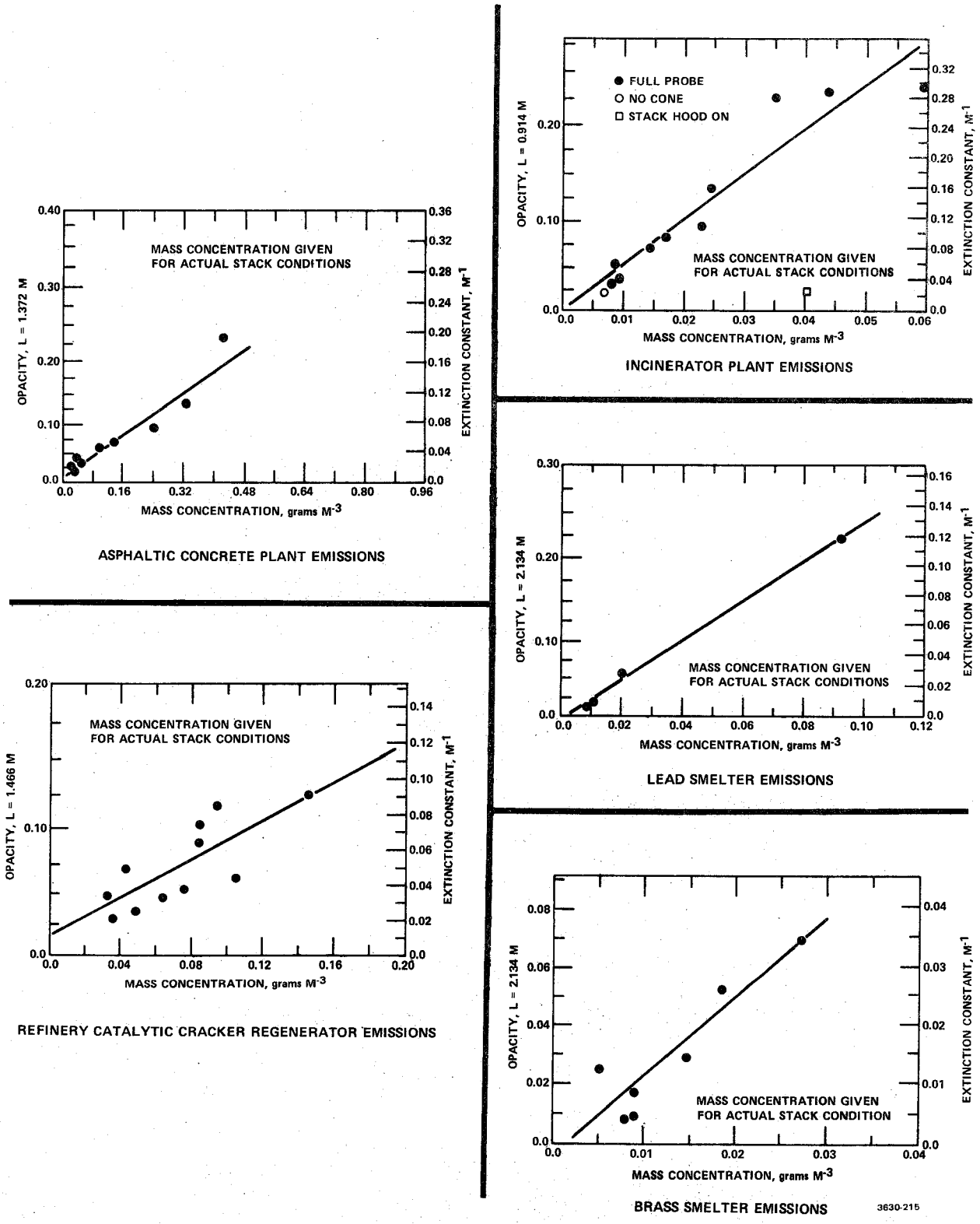

Figure 13. Opacity - mass concentration relationship for various industrial sources. After Reisman, et al.[78]

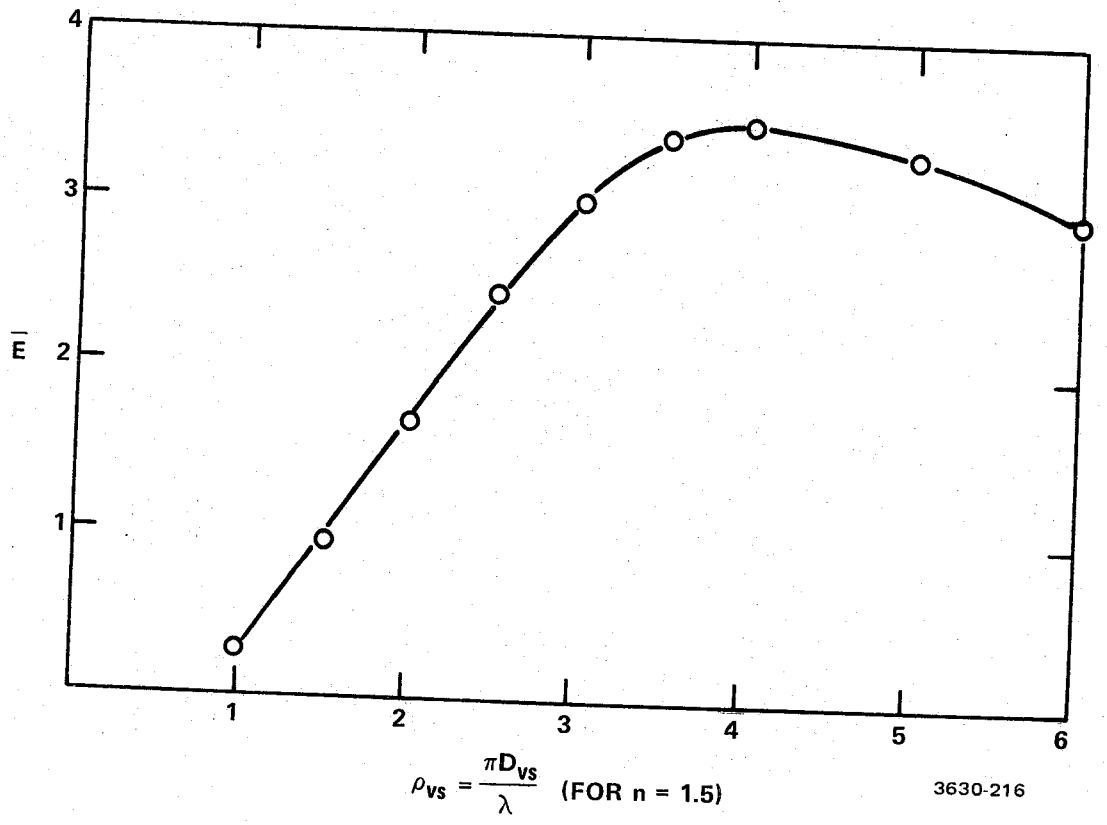

Figure 14. Mean extinction coefficient as a function of the phase shift parameter ρ_{vs}. After Dobbins and Jizmagian.80

efficient ($\bar{E}$) is shown as a function of the phase shaft parameter (ρ_{vs}) of a polydisperse aerosol.[80] The phase shift parameter is defined in terms of the mean volume-surface diameter:

$$\rho_{vs} = 2(n-1)\pi D_{vs}/\lambda \tag{4}$$

and

$$D_{vs} = \sum_i n_i D_i^3 / \sum_i n_i D_i^2 \tag{5}$$

where

n = the particles' index of refraction

λ = the wavelength of the radiation

n_i = the number of particles with diameter D_i

By making measurements of optical transmittance (opacity) at two or more well separated wavelengths, points on a response curve like the one shown in Figure 14 are obtained. Two such points are sufficient to determine the average particle size and the particulate concentration in an aerosol.[81] The confusion introduced into measurements of transmittance by variations in particle size is removed by this technique, but the dependence on refractive index remains.

To measure the transmittance as a function of wavelength, the wavelength must be varied. This can be accomplished with white light and monochromatic filters or a monochromator, or with multiple laser sources. Reisman, et al., have demonstrated a unit that uses a broad band light source and optics to form a modulated beam that propagates across the stack.[78] The beam is collected by receiver optics, then split into selected wavelength domains and focused through narrow band filters onto appropriate detectors. It uses four different detectors covering a range

from 0.4 μm to 12 μm. The filters have been chosen so as to avoid the absorption bands associated with the common stack gases. The output of the detectors are fed to phase locked amplifiers which in turn drive multiple pen chart recorders. The system records the transmission through the stack at each of the selected wavelengths.

There are several complex computational methods whereby the particle size distribution and mass concentration can be obtained from the optical density measurements made at the different wavelengths. These are discussed in detail by Kerker.[82]

The system described by Reisman, et al., uses a computer to perform the necessary data reduction[78] This system has been tested on a petroleum refinery catalytic cracking unit catalyst regenerator, a sewage treatment plant incinerator for sludge burning, an asphaltic concrete plant, a secondary brass and lead smelter, and an oil-fired power plant. An example is given for data taken at a sludge incinerator (see Figure 15). Data were taken at 0.4 μm, 1.25 μm, 2.2 μm, and 11.6 μm. The optical densities at these wavelengths are shown versus the optical density from white-light. The data show a steady decrease in scattering efficiency with increase in the wavelength. At 1.25 μm the efficiency is about one-fourth of that at 0.4 μm and at 2.2 μm the efficiency is one-half of that at 1.25 μm.

The use of multiple-wavelength transmissometers to monitor mass emissions seems promising, but the systems are more complicated than ordinary transmissometers, and an undesirable dependence on the particle refractive index can introduce errors.

Light scattering--Suspended particles in an aerosol will scatter (diffract, refract, and reflect), and absorb incident light; the remaining portion is transmitted. Whereas transmissom-

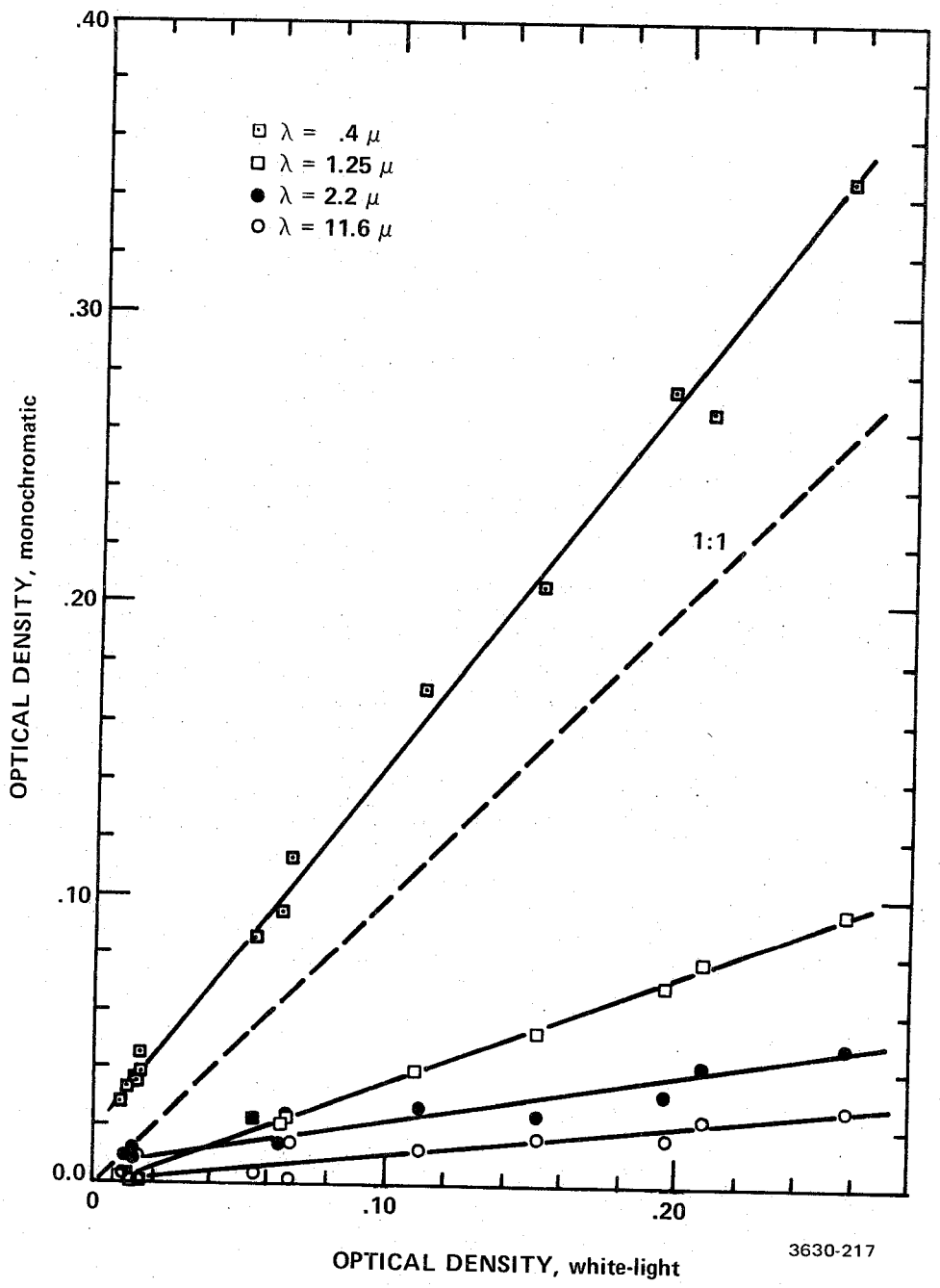

Figure 15. Results of monochromatic vs. white-light optical density measurements made on sludge incinerator emissions. After Reisman, et al.78

eters use this remaining portion of the incident light as a measure of the particulate mass concentration or of opacity; other instruments use the scattered portions. Instruments that detect the scattered light can be much more sensitive at low particulate concentrations than transmissometers.

Light scattering instruments suffer from some of the same problems as transmissometers when attempting to infer mass; i.e., sensitivity to particle size, shape, and chemical composition. The functional dependence of the instrument response to these factors is determined by the detection angles employed relative to the incident beam. This point is illustrated by Figure 16 where the scattered intensity versus particle size is plotted for two detection systems and the same white light illumination. For ideal aerosol mass monitors (many particles in the beam) these curves would fall on the same straight line with a slope of three. The fact that these lines are not straight and do not have a slope of three means the deduced mass depends upon the aerosol size distribution. The variation with refractive index means that the deduced mass also depends upon chemical composition. Further discussion of scattering versus refractive index can be found in Hodkinson and Greenfield's work.[84] The effects of such behavior are accounted for in practice by calibrations of the instrument against another more direct mass measurement of the aerosol of interest.

Nephelometers, devices that attempt to measure all of the scattered light, have recently been applied to stack monitoring. One such instrument called the Plant Process Visiometer (PPV) has been developed by Meteorology Research, Inc.[85,86,87] It must be pointed out here that this instrument is designed to measure opacity and is not considered a mass monitor per se; however, it is normally quite sensitive to mass changes. A diagram of its optical assembly is shown in Figure 17. The sample, extracted

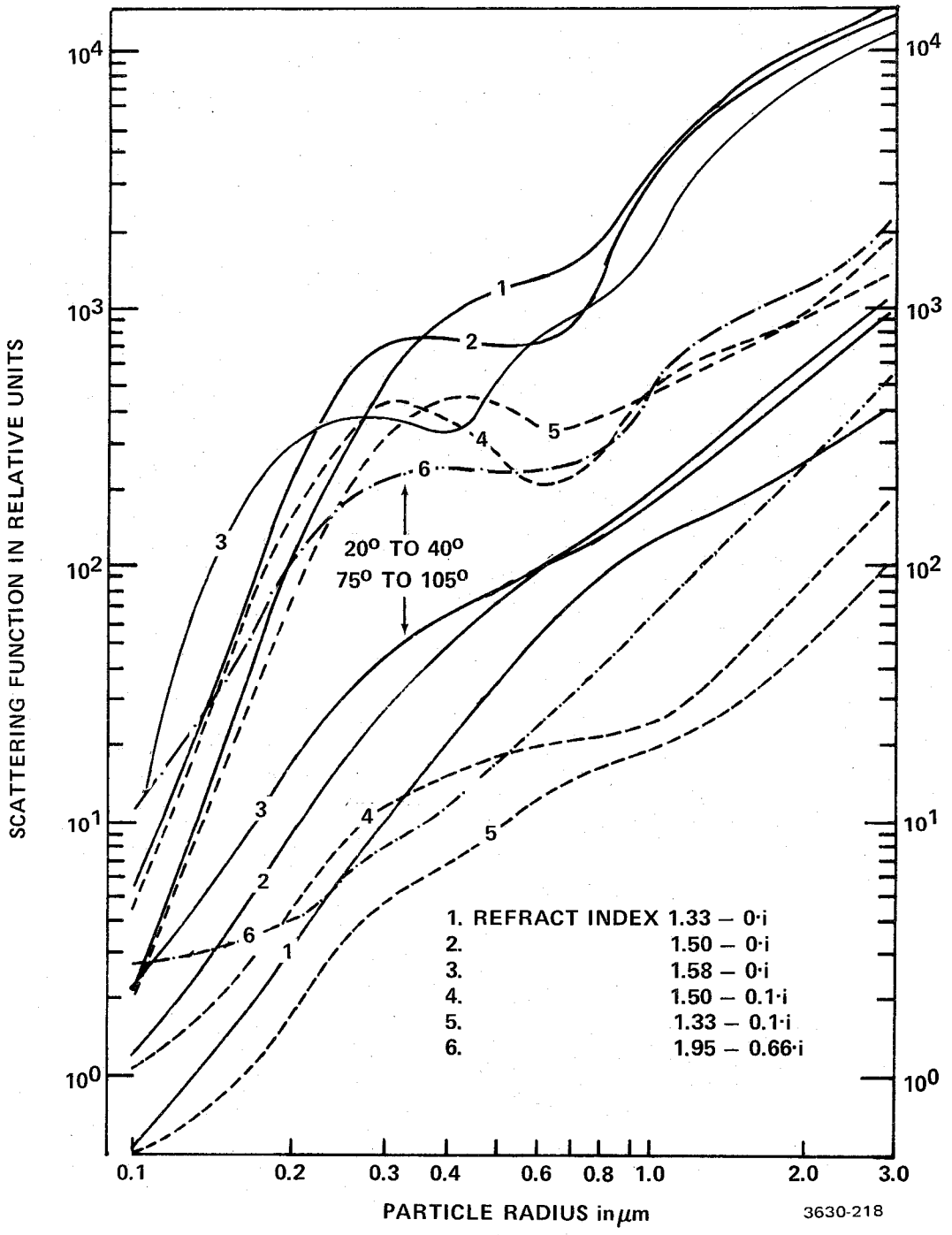

Figure 16. Scattering function vs. particle radius for several refractive indices. After Quensel.[83]

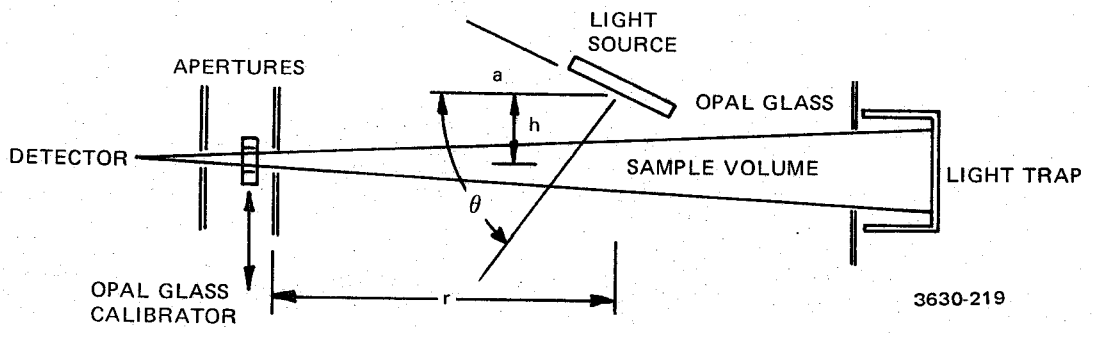

Figure 17. Optical assembly diagram of a nephelometer used in stack monitoring. The scattering angle θ, for any light ray from the source, is the angle between the ray and the horizontal line a. From Ensor and Bevan.[85]

through a probe with no dilution, is passed through the detector view. The light source is diffuse so that light rays illuminate different portions of the sample in a wide range of angles from near 0° to near 180° with respect to the detector view. During operation the detector signal is calibrated with an opal glass calibrator which has been adjusted to give a scattering coefficient of 0.055 m^{-1} as determined with oil smoke using an integrating nephelometer and a transmissometer. This scattering coefficient value corresponds to an opacity of 5.4 percent assuming no light absorption (see the section on opacity for further discussion).

Figure 18 shows mass correlation data with the PPV at the inlet and outlet of a particulate scrubber on a coal-fired utility boiler. The mass was determined gravimetrically and the scattering coefficient averaged over the time of each mass run. Ensor[88] found that about half of the fluctuation is explained by the uncertainties in sampling, and part of the remaining variation by changes in the particle size distribution. Figure 19 illustrates the effect which size distribution variation has upon the correlation between mass concentration and scattering coefficient. The data from Figure 20 were used to obtain the ratio of particle volume concentration to the scattering coefficient assuming a particle density of 2 g/cm^3. The geometric mass mean radius was derived from inertial impactor runs. The solid curve (from Ensor and Pilat[89]) is that calculated for log-normal size distributions with a geometric standard deviation of 4 and a constant particle refractive index of 1.50 with no light absorption.

An in situ monitor has been developed[90] that is based on the measurement of the backscattered light. It uses a laser as the light source and is a single ended instrument, i.e., both

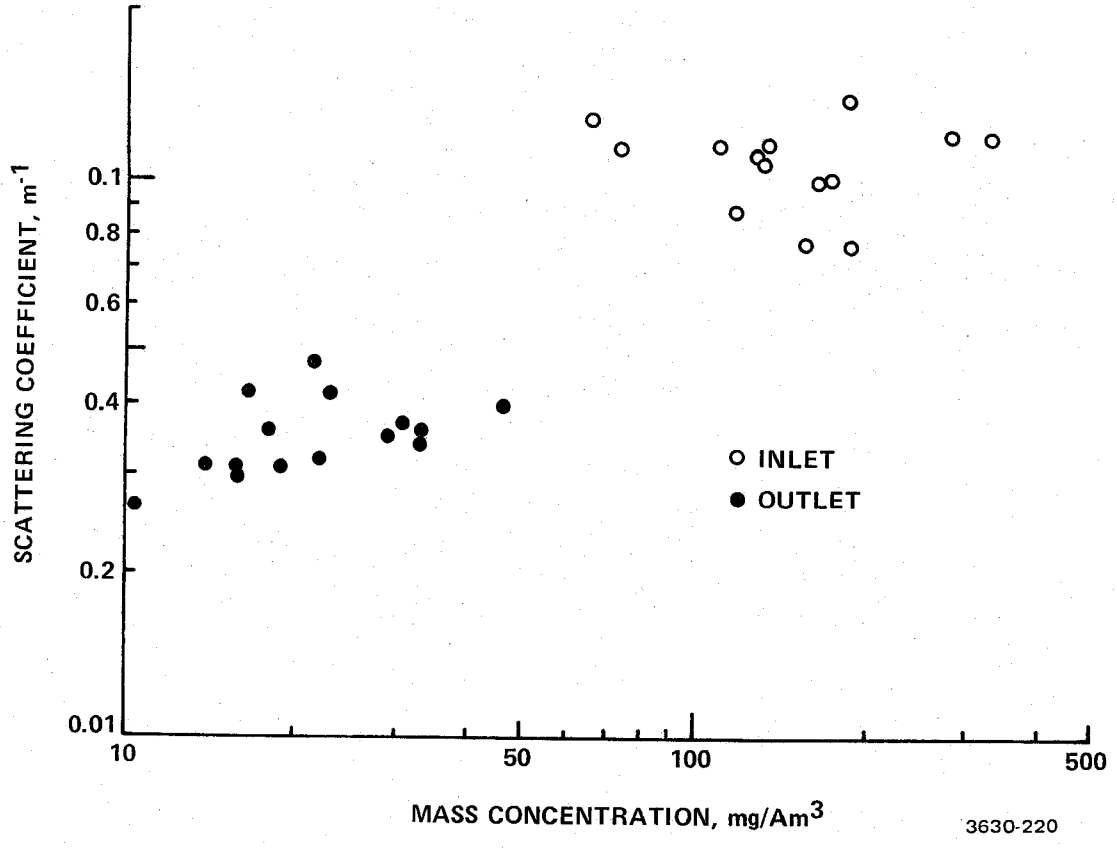

Figure 18. Mass correlation data taken with the Plant Process Viscometer at the inlet and outlet of a particulate scrubber on a coal-fired utility boiler. After Ensor, et al.[88]

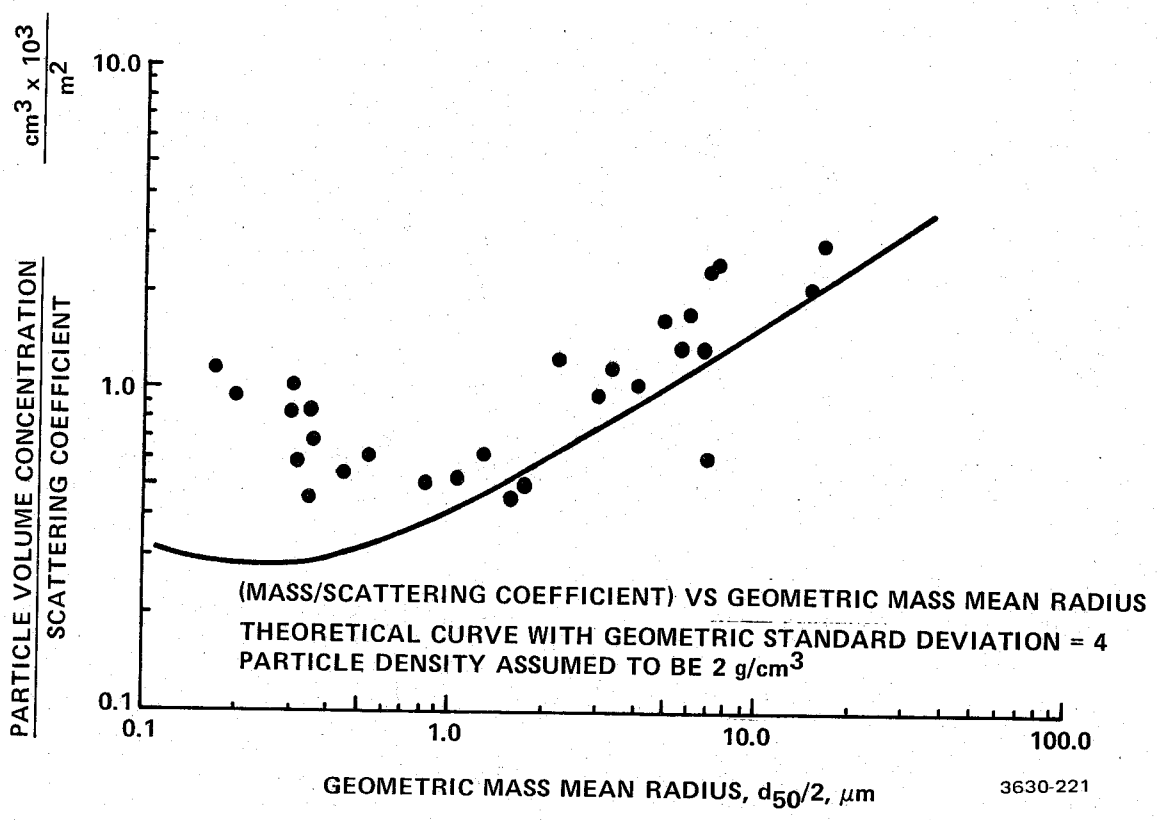

Figure 19. Effect of particle size distribution on particle volume concentration/scattering coefficient. From Ensor, et al.88

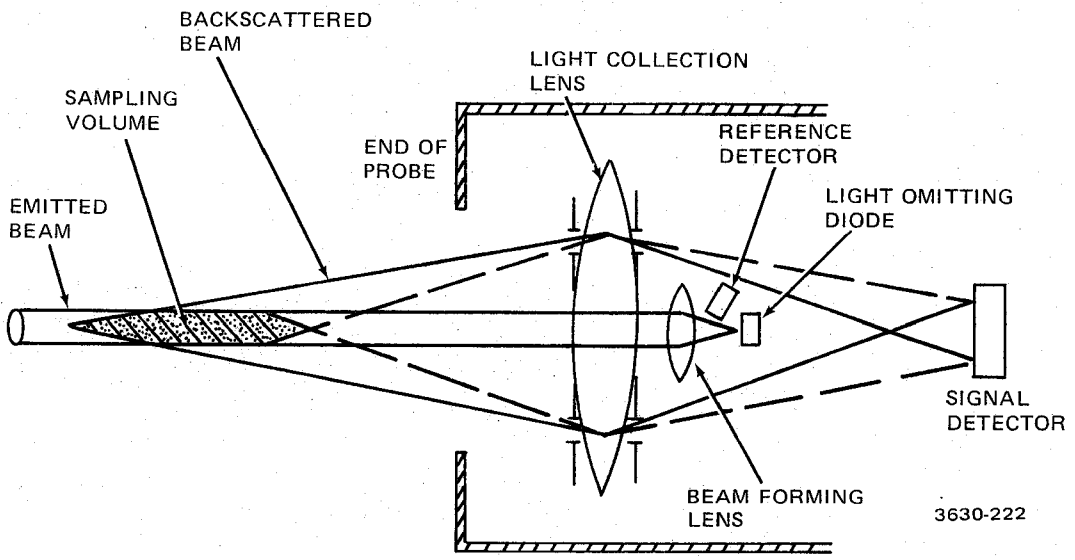

Figure 20. Optical diagram of the PILLS V instrument. From Schmitt, et al.[91]

the light source and detector are located within the same enclosure. The instrument is called the PILLS V (see Figure 20). It is a member of a family of Particulate Instrumentation by Laser Light Scattering devices developed by Environmental Systems Corporation. An interesting feature of the PILLS V is the way in which the instrument determines mass concentration. The instrument optically defines a sample of 12 cm^3 (0.73 in^3) at 10 cm from the end of the probe within the process stream. Detection of the scattered light at angles greater than 160° relative to the beam produces an electrical signal that is proportional to the mass contained within the sample volume. Since the sample volume is a constant, the mass concentration is read directly from an appropriately labeled scale on the instrument meter. At present, the instrument does not possess the capability to traverse large stacks in order to obtain multi-point measurements. Since the particulate mass concentration is frequently not uniform across the entire cross-sectional area of the stack, the use of such a small sampling volume and the inability to traverse creates a problem when trying to obtain data that is representative of the actual total mass concentration present within the stack.

Some of the specifications[92] for the model P-5A, an improved version of PILLS V, include the following: a measurement range of 0.001-10 gram/ACM; response that is proportional to particle mass concentration and is relatively independent of the particle size in the range of approximately 0.1-8 μm; a process gas pressure limit of +5 inches of water from ambient (higher limits are optional); a process gas temperature limit of 260°C (500°F) (negative pressure streams permit use at higher temperatures); an instrument response that is independent of gas velocity; an optional automatic zero and span calibration at preset intervals without removal from the stack; and, a light source consisting of a highly collimated beam of monochromatic laser light whose wavelength is 0.9 μm. Figure 21 illustrates the theoretical variation of

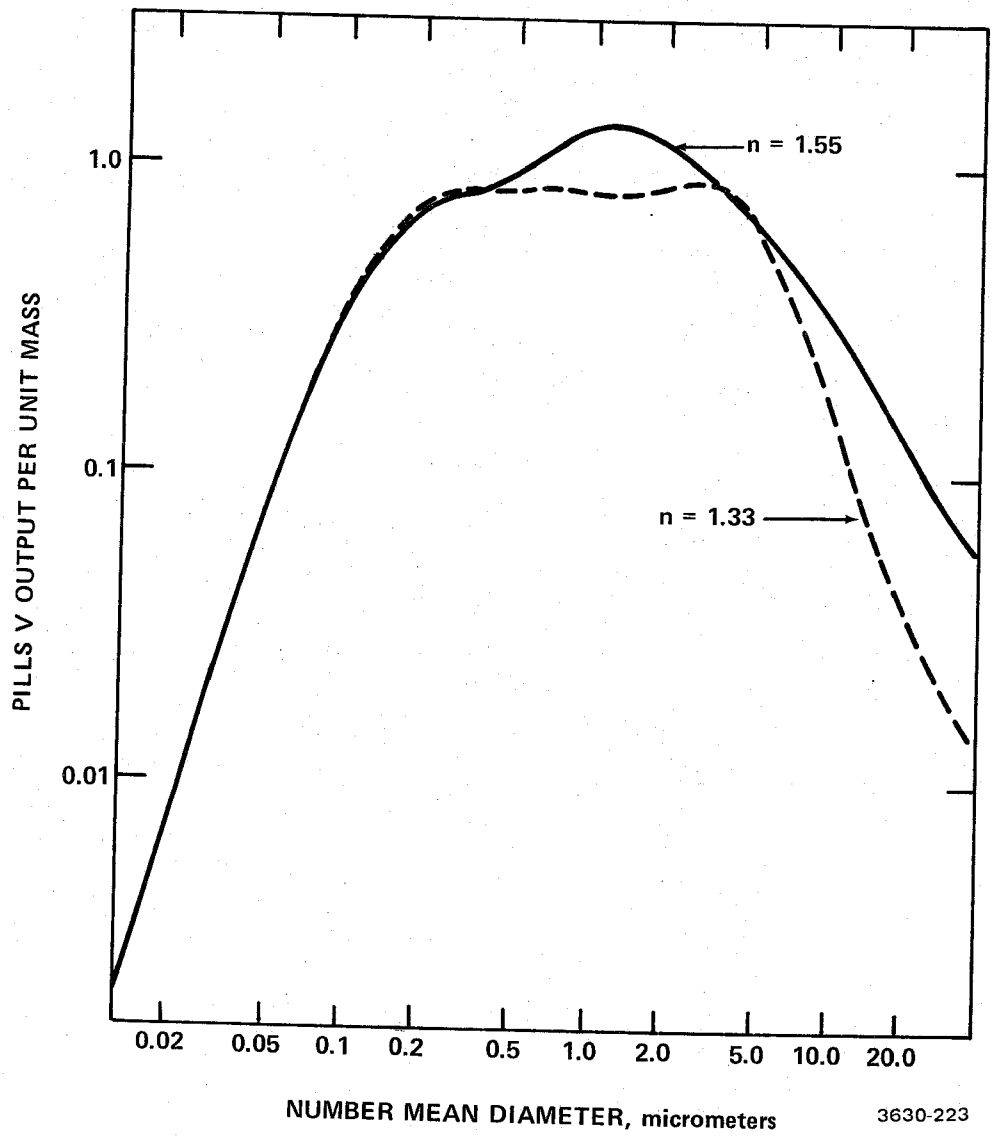

Figure 21. Theoretical response of PILLS V vs. particle size. Calculations for log-normal size distributions with geometric standard deviations of 1.65 and varying number mean diameter. From Schmitt, et al.[93]

the instrument response with particle size for two types of particles, SiO_2 and H_2O. These calculations were performed for an assumed log-normal size distribution with geometric standard deviation of 1.65. Note that the ordinate is output per unit mass taking the density into account for these two types of particles. Although the response is about the same for these two compositions calibrations using gravimetric measurements for reference are necessary for each process stream.[93,94,95] It should be pointed out also that particle irregularities affect this type of measurement more than opacity or total scattering.

Performance data on the PILLS V are available in which mass correlation tests have been performed. Independent wind tunnel correlations were performed where mass concentration was derived from tunnel parameters (mass input rate, volumetric air flow rate, air temperature, etc.). These tests show linearity correlations within ±10%.[91] In another series of tests performed by an ESP manufacturer at a coal-fired power plant, correlations of the PILLS V to EPA Method 5 measurements varied by within ±7% on 5 tests, +10% on one, and -17% on one.[91] Two extensive series of tests[94,95] have been performed in the pulp and paper industry which illustrate its sensitivity to size distribution and particle composition. In one of those series[95] the PILLS V was compared with a sampling train similar to the EPA Method 17 at three paper mills. Tables IV-VII summarize the conditions and results of those tests. Table VI shows the improvement of the reliability of the data, indicated by an increase in the correlation coefficient, when the per cent of particle sizes within the 0.1-10 μm range is increased. Table IV shows the correlation of instrument response to color and salt content. The higher salt content produced a higher instrument response as did the lighter color (higher reflection). It is interesting, however, that the dark color with high salt content produced a high instrument response. This suggests that the salt content had a more profound effect than the color.

TABLE IV. TYPICAL FLUE GAS CONDITIONS AND OPERATING VARIABLES FOR CPM* CALIBRATION (AFTER WOSTRADOWSKI[95])

MILL	A	B	C
Average Flue Gas Conditions:			
CO_2, %	8	8.5	16
O_2, %	12.5	12	3
H_2O, %	10-15	10	33
Temp, °F	450	420	325
Dust Conc, gr/sdcf	0.1-0.7	0.15-1.0	0.05-1.2
Filter Mesh Size, μm	1.0	0.3	0.3 or 1.0
Boiler Fuel Type	Hog/Gas	Hog/Oil	Black Liquor
Continuous Operation, months	2.5	1.5	2.5
Isokinetic Sampling	Yes	Yes	Yes
Installation	Stack	--Duct to Stack--	

*Continuous Particulate Monitor (PILLS V)

TABLE V. LINEAR REGRESSION RESULTS OF CPM* CALIBRATION CURVES FOR EACH MILL (AFTER WOSTRADOWSKI[95])

MILL	A	B	C
Instrument Sensitivity**	0.2	0.5	1.0
Particulate Conc Data, acf:			
Slope***	9.6	15.5	12.1
Standard Error	51.7	67.6	39.1
Correlation Coeff, r^2	0.68	0.79	0.89
Particulate Conc Data, sdcf:			
Slope***	16.2	21.8	32.0
Standard Error	81.9	105.7	109.0
Correlation Coeff, r^2	0.65	0.75	0.89

* Continuous particulate monitor (PILLS V).

** To compare the instrument response in each mill the instrument sensitivity (range setting) has to be adjusted to the same value.

*** Linear regression Equation Y = MX+B where Y = particulate Concentration, M = slope, X = instrument response and B = intercept (Theoretically there should not be an intercept and this was substantiated by experiment).

TABLE VI. COMPARISON OF CORRELATION DATA WITH PARTICULATE CHARACTERISTICS (AFTER WOSTRADOWSKI[95])

MILL	A	B	C
Slope*	24.0	15.5	6.1
Correlation Coeff, r^2	0.68	0.79	0.89
Particulate Size Outside Range 0.1 to 10 μm, %	60	20	<5
Particulate Color**	5-10	5-10	0
Salt Content, %	20	50	30

* The instrument sensitivity (range setting) was adjusted (by calculation) to that used at Mill B (0.5) to the other two mills. This was done by multiplying the instrument response in Mill A by 2.5 and by dividing the instrument response in Mill C by 2.0.

** Baccarach color test (Petroleum Industry) is a darkness/lightness rating based on 0 - white and 10 - black.

TABLE VII. RELATIVE PILLS V RESPONSE AS A FUNCTION OF SALT CONCENTRATION AND COLOR OF THE EXTRACTED DUST SAMPLES FROM MILL B (AFTER WOSTRADOWSKI[95])

TEST NO.	SALT >50% OF DUST	SALT <50% OF DUST	DARK COLOR	LIGHT COLOR	LOW PILLS V RESPONSE	HIGH PILLS V RESPONSE
358	X			X		X
359	X			X		X
364	X			X		X
370	X			X		X
373		X	X		X	
374		X	X		X	
375		X	X		X	
376		X	X		X	
379		X	X		X	
368		X	X		X	
401		X	X		X	
383	X		X			X
384	X		X			X
392	X		X			X
394	X		X			X
362		X		X		X
366		X		X	-	-
380		X		X	X	

Mass measurements have been performed and recommended with another backscattering instrument[96] called an LTV monitor, although a commercial model is not available. This device, illustrated in Figure 22 uses a high intensity argon or xenon laser and a TV camera with telephoto lens. The camera optics image the backscattered light at 175° from the focused view volume, intersecting the laser beam. Particles that produce illumination above the sensitivity threshold can be resolved as distinct flashes and the intensity of each can be measured. The size of each particle is derived from the intensity. The particle mass is then deduced from the size and an assumed density. The video analysis circuitry is included in reference 96. The dynamic range of the camera limits the size range to about a factor of 10. This method has the capability of changing the position of the view volume in the process stream. However, deduced particle size from backscattering is very sensitive to refractive index and errors are tripled in the calculation of the mass.

The results of tests of the LTV on coal-fired boilers are quite good in comparison with EPA Method 5 and opacity measurements given in Table VIII. The laser power was 800 watts and the sample volume of 1 mm^3 was set 40 cm into the duct. The camera resolved this volume into 10^4 elements so that 10^3 particles per sample could be viewed.

In summary, two light scattering instruments, the MRI nephelometer and the ESC PILLS V, are commercially available and being used in routine measurements on process streams. As indicated above these devices give acceptable measures of mass concentration in real time if calibration is performed for each stream against a direct mass technique and if the size distribution and composition of the aerosol remain nearly constant. Very little is known at present about the limits of variation of these aerosol parameters for a given type of stream. At present studies are per-

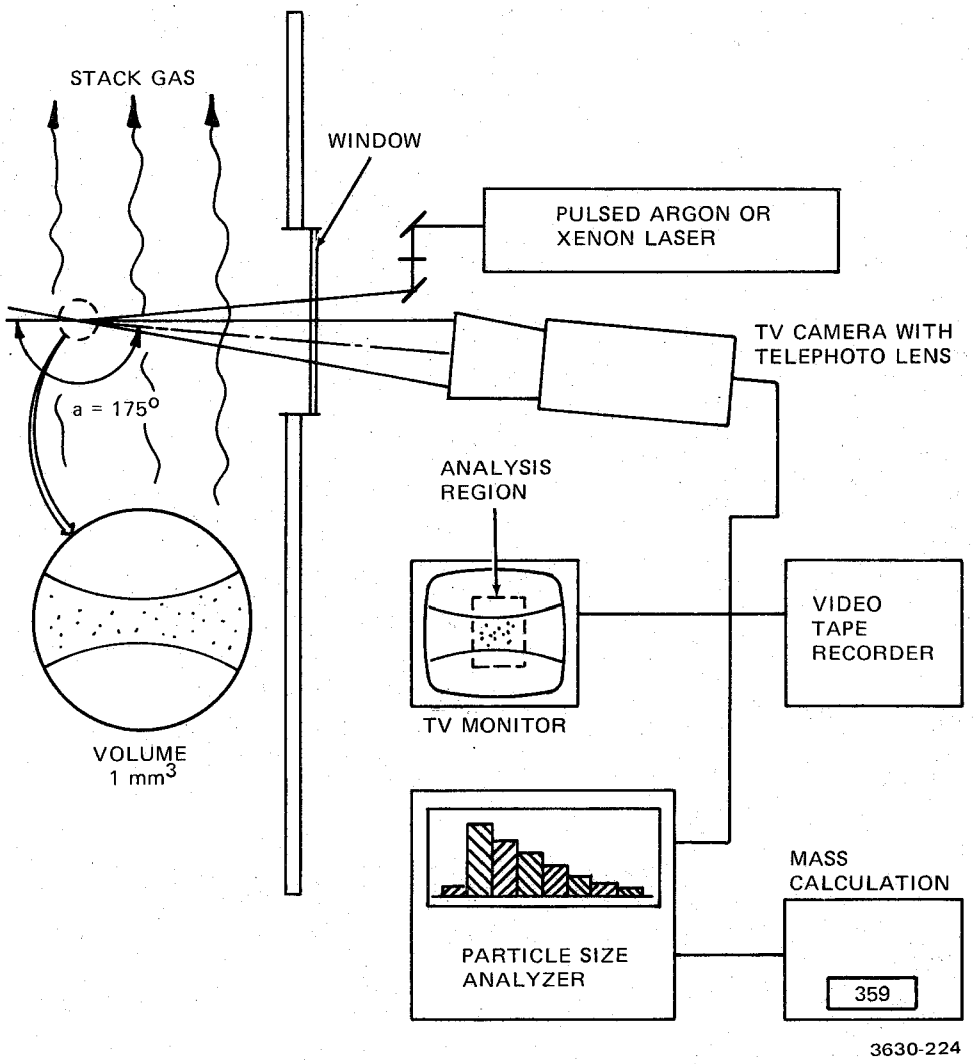

Figure 22. Schematic of Laser-TV Monitor. After Tipton.[96]

TABLE VIII. FIELD TEST RESULTS. (RESULTS IN GRAINS/STANDARD FT^3, AFTER TIPTON[96])

	TEST NO.	EPA TRAIN TEST	LTV MONITOR TEST	OPACITY METER RESULT (%)
Coal-fired boiler	1	0.295	0.297	40
	2	0.104	0.100	27
	3	0.143	0.112	25
Oil-fired boiler	1	0.035	0.0322	
	2	0.0361	0.025	
	3	0.0558	0.0575	

formed on each process to test the correlation of these devices to other mass measurements as in the studies described in references 91 and 93-95.

Other Methods

Sem, et al.[53,97] have reviewed possible techniques for monitoring particulate emissions, and a number of interesting concepts were discussed. Some of these are listed, in addition to methods Sem did not mention, below:

Sem, et al.

- Resonant Frequency
- Gravimetric Weights
- Rotating Masses
- Impact Momentum
- Capacitance - Dielectric Change
- Soiling Potential
- Acoustical Attenuation and Dispersion
- Filter Pressure Drop
- Gas Adsorption
- Volume Measurement
- Capacitance - Impact
- Electrostatic Contact Charge: Bounce
- Ion Current Attenuation
- Acoustical Particle Counter
- Flame Ionization (Altpeter, et al.[98])
- Flame Photometry
- Pressure Drop in Nozzle

Additional

Guichard Apparatus - Charge Transfer (Knapp[68])
Hot Wire Anemometry (Goldschmidt[99])
Surface Ionization (Extranuclear Laboratories, Inc., P.O. Box 11512, Pittsburgh, PA 15238)

Some of the techniques listed above may be applicable to monitoring process streams, and some commercial instruments are available for laboratory and ambient measurement. However, none of these concepts are sufficiently proven to warrant more discussion in this manual.

SECTION III
OPACITY

Suspended particles in a fluid medium will scatter and absorb radiation; the remaining portion is transmitted. The transmittance, T, of a fluid medium containing suspended particles is defined as the ratio of transmitted radiation intensity to incident radiation intensity. T is given by the Bouguer, or the Beer-Lambert, law:[100]

$$T = \exp(-EL) \tag{6}$$

where L is the thickness of the medium, and E, the extinction coefficient of the medium. Sometimes the measured transmittance is expressed in terms of optical density defined as

$$O.D. = \mathrm{Log}\,(1/T) \tag{7}$$

instead of the transmittance. Consequently, instruments and methods for aerosol measurement based upon light transmission principles have been referred to as transmissometers, smoke density meters, photo-extinction measurements, turbidimetric measurements, etc.

While transmittance is defined as the ratio of light transmitted through the aerosol to the incident light, opacity is defined as the ratio of the light attenuated from the beam by the aerosol to the incident light (i.e., opacity = 1-T). Aerosols which transmit all incident light are invisible, have a transmittance of 100%, and an opacity of zero. Emissions which attenuate all incident light are totally opaque, have an opacity

of 100% and a transmittance of zero. By definition, opacity can only be measured rigorously using transmittance, rather than light scattering measurements, because the latter yield no measure of the quantity of light that is absorbed.

Many versions of transmissometers, or smoke meters, are available as stack emission monitors. If the transmissometer is used to measure in-stack opacity for purposes of compliance with federal regulations, it must meet the EPA requirements for opacity measurement systems as specified in the Federal Register of September 11, 1974.[101] For instance, the use of visible light as a light source is required. For other uses of the data, it may be possible to operate with nonvisible wavelengths. The angle of view and the angle of projection are both specified, for compliance, as no greater than 5° (see Figure 23).

A typical double pass in situ transmissometer design is illustrated in Figure 24. The design shown employs a chopped, dual-beam, optical system that automatically compensates for the effects of temperature, voltage changes, and component aging.[102] The same source is optically divided into a measuring beam and a reference beam. The measuring beam is reflected back by a corner-cube retroreflector. The reference beam provides automatic gain control to compensate for any changes in detector response or source intensity. Zero calibration checks can be made by inserting a test reflector in the light path outside the optical window of the source/detector (transceiver). This test reflector simulates a condition of zero opacity. The zero calibration check is used to adjust for particulate accumulation on the optical windows or drift due to the instrument circuitry. It is assumed that the retroreflector windows soil at the same rate as the transceiver window.

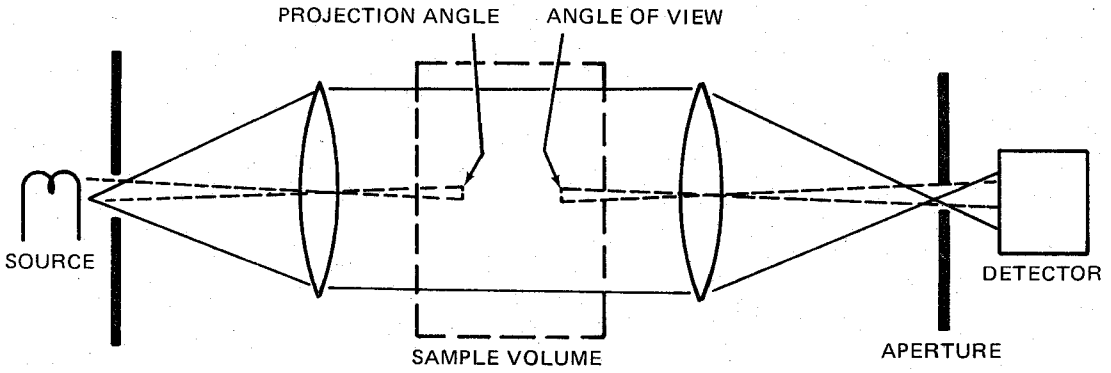

SCHEMATIC OF A TYPICAL TRANSMISSOMETER SYSTEM

3630-225

Figure 23. Schematic of a transmissometer showing projection and viewing angles which must be no greater than 5° for EPA compliance.

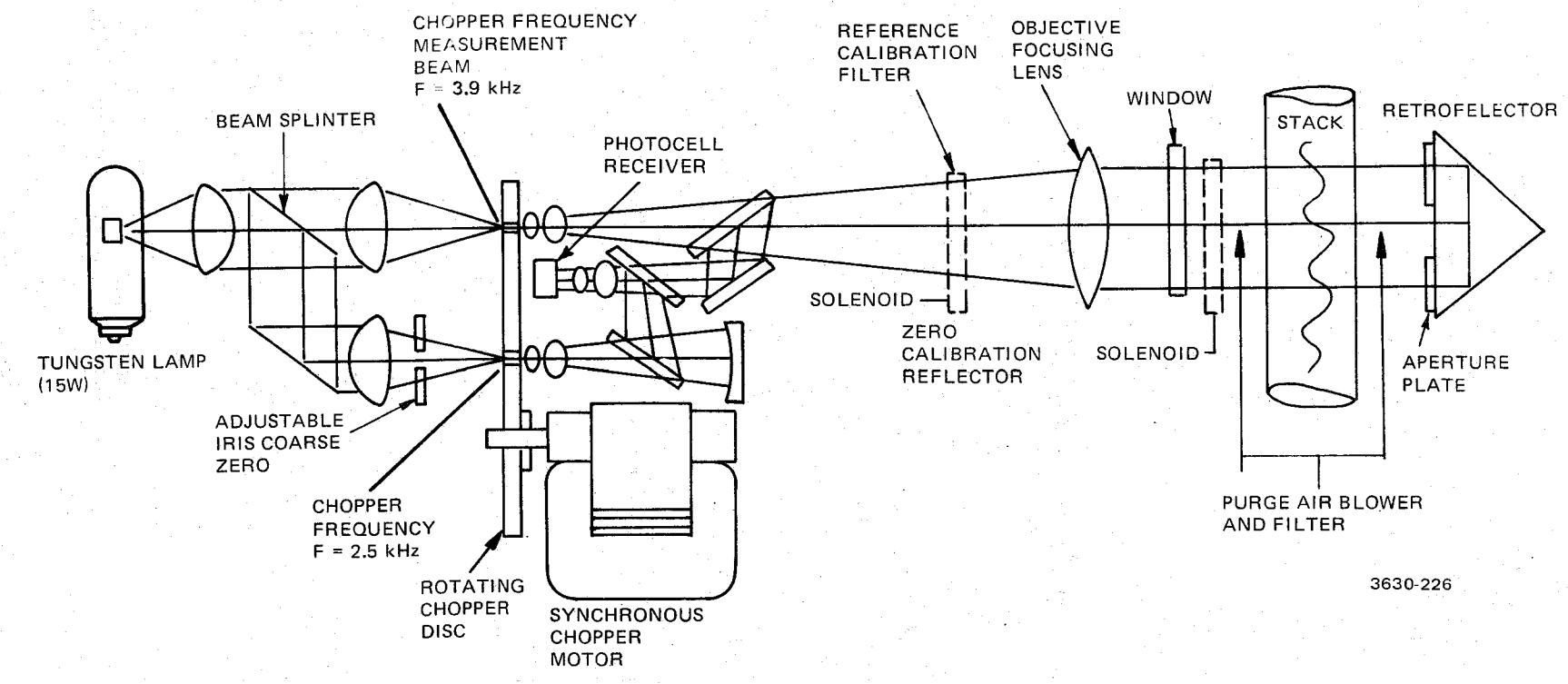

Figure 24. A typical double pass in situ transmissometer design. After Nader.[79]

Both the transceiver and retroreflector unit are specially constructed with air purging attachments to keep the optical windows free of particulate deposits, and can provide adequately clean windows for three or more months of unattended operation.

A single pass design is shown in Figure 25. In this design, the light source with the collimating lens and power supply are placed on one side of the stack with the detector cell, electronics and power supply on the opposite side. The beam makes only one pass through the stack gas which eliminates the problems caused by reflectivity or back scattering of the effluent being measured. There are two photocells, one for detection and one used as a reference. Because ambient temperature fluctuations affect the sensitivity of silicon photocells, compensation of the detector photocell is required. The reference photocell, which samples the light from the source via a fiber optics assembly, is needed to compensate for variations in light source intensity due to aging, line voltage changes, and light source replacement. The current output of the reference cell is proportional to the light output of the source lamp. The design shown incorporates a moving Mylar strip to protect the optical surfaces from dust accumulation. This strip passes in front of the objective lens on both the source and the sensor at a rate that effectively changes every hour that the window is exposed to the stack.

Transmissometers usually contain an alarm or warning system that alerts plant personnel when the opacity exceeds a preset limit. An alarm and/or plant cut off switch can be automatically activated when limit values are exceeded. One instrument possesses the ability to integrate the opacity measurements over various time intervals. This permits automatic monitoring and control of unacceptable emission or dust levels whch are present for long periods of time, and not for just a brief moment. This instrument was used to monitor cement factory emissions sources.[104]

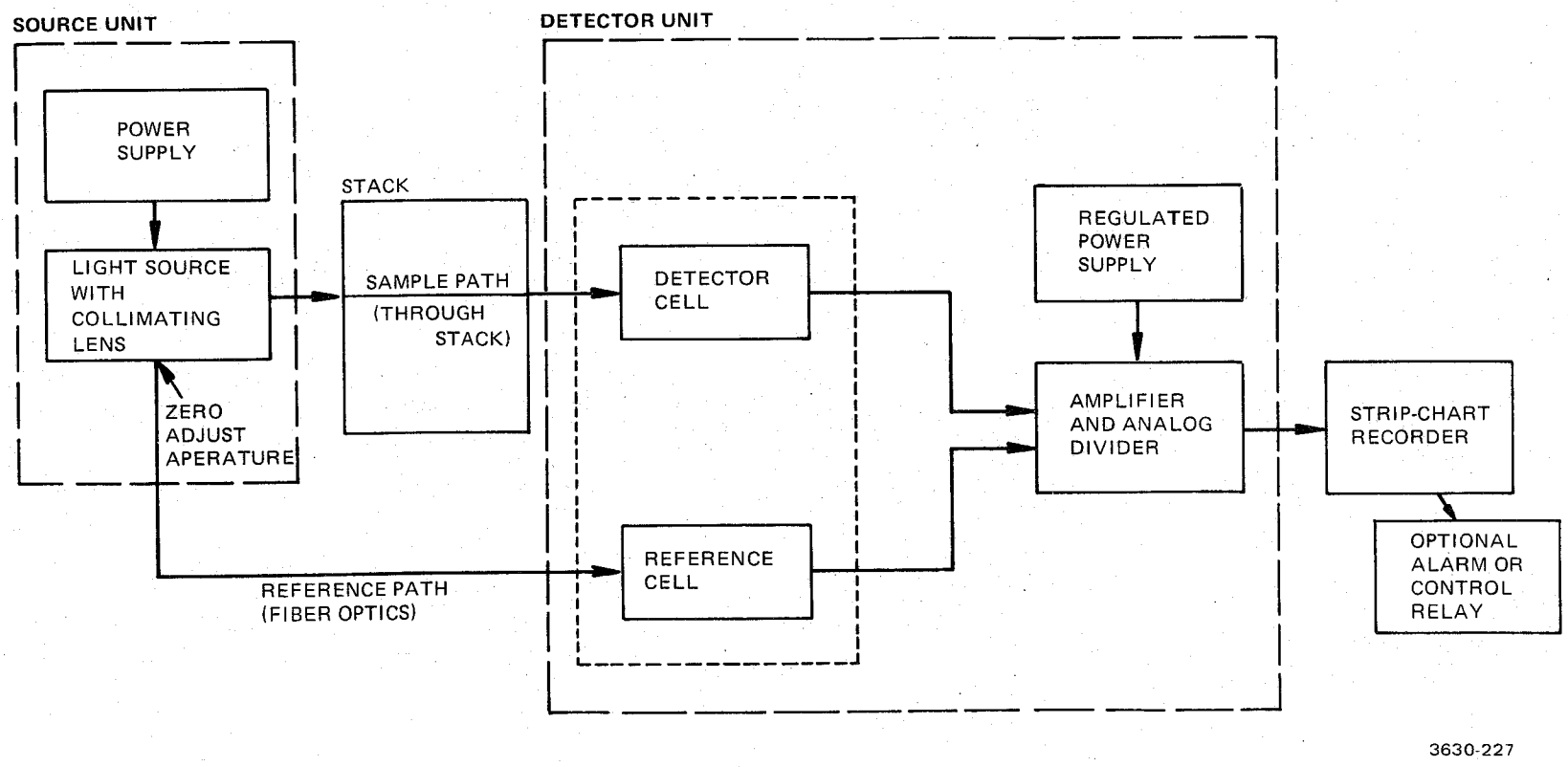

FUNCTIONAL BLOCK DIAGRAM

Figure 25. A single pass transmissometer design. After Haville.[103]

Transmissometers can be used to measure the in-stack opacity in order to obtain an estimate of the plume opacity for compliance testing; performance specifications for these transmissometers can be found in the Federal Register.[101] Also, transmissometers can be used to measure the in situ opacity for process control or as an estimate of mass concentration.

When the required measurement is the opacity of the emissions at the exit of the stack, a measurement at any other location in the stack has to have its optical path length adjusted to the exit diameter. The method of calculation for this adjustment can be found in the Federal Register.[101] Figure 26 shows the relationship of effluent transmittance at the stack exit as a function of in-stack transmittance for various ratios of stack exit diameter to transmissometer optical path length.[105]

Comparisons of transmissometer measurement with visual plume opacity have been made. The in-stack measurement is usually compared with an out of stack plume measurement performed by visual observation by a trained observer or performed by telephotometry.

In one telephotometric study,[106] it was concluded that the in-stack transmissometer can be used to monitor the opacity of plumes emitted from steel plant basic oxygen furnaces and from cement plants (over a small range of opacity) with reasonable accuracy. However, use of the in-stack transmissometer for sulfuric acid plants was found to be questionable.

Another study was performed to determine the influence of transmissometer design on the correlation of in-stack opacity measurements with the stack plume opacity as measured by telephotometry.[107]

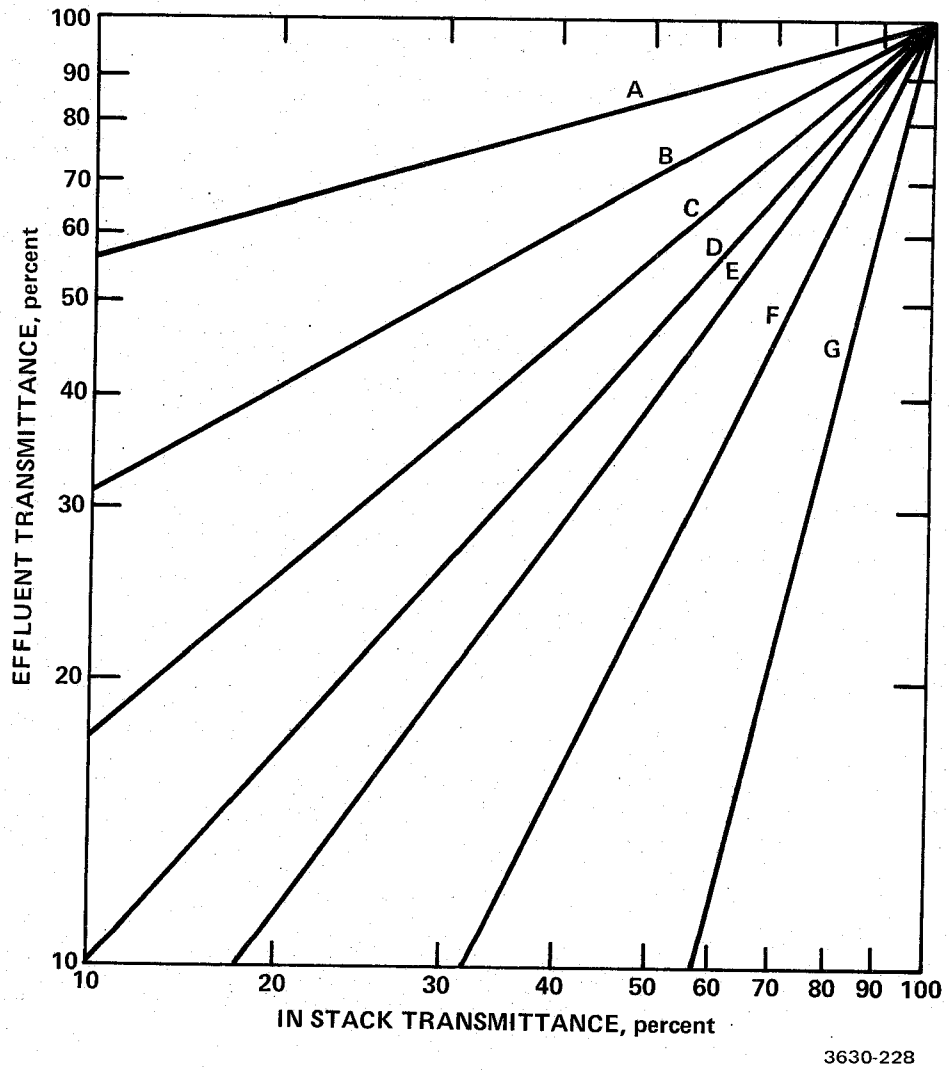

Figure 26. Effluent transmittance vs. in stack transmittance for varying ratios of stack exit diameter to in stack path length: A = 1/4, B = 1/2, C = 3/4, D = 1, E = 4/3, F = 2, G = 4. After Nader.[105]

Ensor and Pilat have developed theoretical methods for calculating plume opacity from the properties and concentration of the particles in the plume.[89] Use of constants that are determined experimentally from the effluent improves the reliability of the theoretical method.[108]

The important parameters which affect transmissometer performance in a given process stream are the particle size distribution in the process stream, particle shape and refractive index, the wavelength of the transmitted radiation, and the collimating angles of the transmissometer.

The effect of the first four parameters are combined into the extinctin coefficient, E, of the process stream.

$$E = \pi \int_{r_1}^{r_2} r^2 Q_E(\alpha, m) N(r)\, dr$$

where

α = size parameter, $2r\pi/\lambda$
r = particle radius
λ = wavelength of the radiation
m = particle refractive index relative to the gas medium
$N(r)$ = number size frequency distribution, i.e., the number of particles of radius r per volume per Δr
Q_E = particle extinction coefficient

Thus, the extinction coefficient, E, is calculated by summing the effects of all the individual particles in the process stream.

Q_E, the particle extinction coefficient, is defined as the total light flux scattered and absorbed by a particle divided

by the light flux incident on the particle. For spherical particle, with typical indices of refraction relative to air of 1.3 to 1.6, Q_E will vary from 0 to 4. For these particles in the Rayleigh scattering region (diameter, $d < 0.05$ μm in white light) Q_E is approximately 0. For this type of particle in the Mie scattering region ($0.05 < d < 2$ μm in white light) Q_E varies from 0 to 4. For this type of particle in the geometric scattering region ($d > 2$ μm in white light) Q_E approaches a theoretical limit of 2 for very large particles. See Figure 27.

In practice, the particles in stack emissions are polydispersed and the light source is polychromatic. This results in the smoothing out of the oscillatory behavior depicted in Figure 27. However, distribution of transparent particles which are skewed to a narrow range of particle sizes in the Mie region can result in opacity readings for this region similar to those found for much higher mass concentrations of absorbing particles.

Aerosols with mean particle diameters above 2 μm, such as those sometimes found in stacks, will generally have a mean particle extinction coefficient of 2 and a transmittance that is not strongly dependent on wavelength. Measurements of the emissions from a pulverized coal-fired power plant using an in-stack transmissometer, were found to vary as a function of the wavelength of monochromatic light in the visible range, there being an increase in opacity of about 7% in going from red to blue light.[107] In a study using experimental white (oil) and black (carbon) plumes, this effect was more pronounced with the transparent white plume than with the absorbing black plume.[109]

To obtain true transmittance data the collimation angles (angles of view and projection) for the transmitter and receiver must be limited to reduce the sensitivity to stray light scatter (see Figure 23). A zero degree angle is the ideal collimating

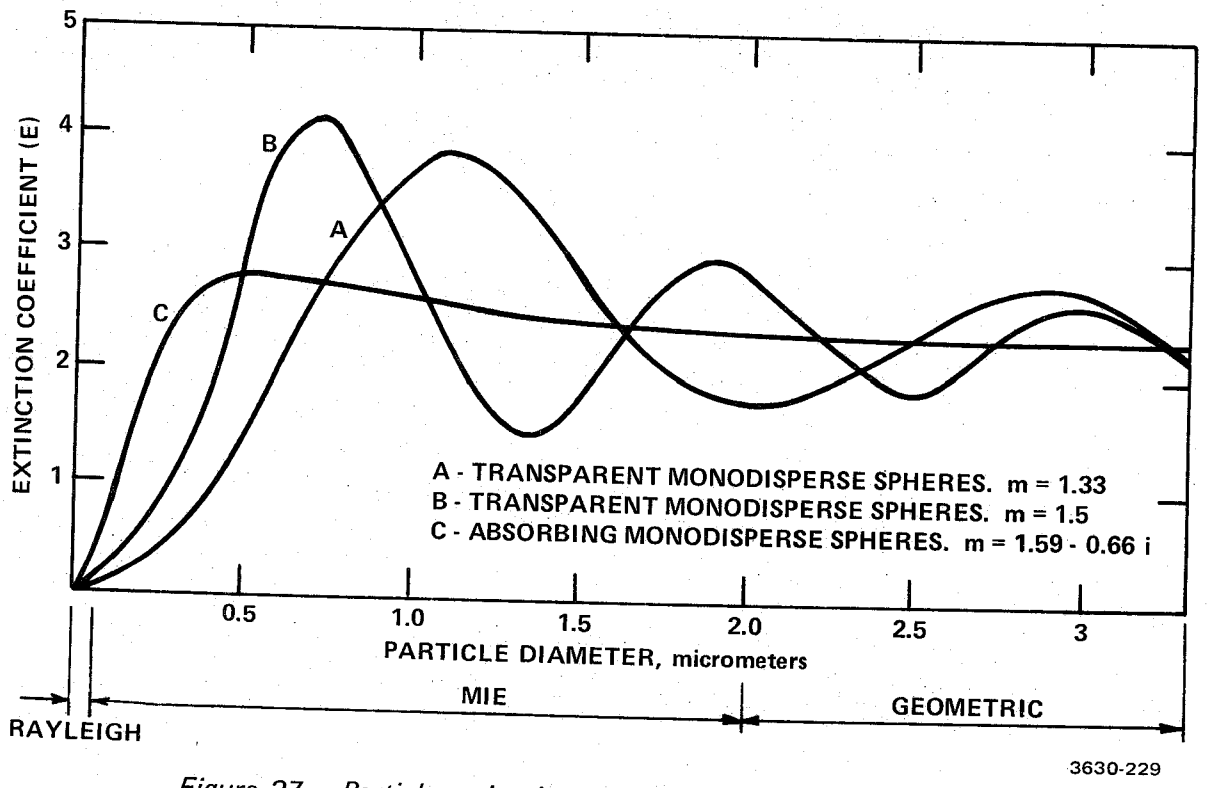

Figure 27. Particle extinction coefficients for various aerosols over three scattering regions: Rayleigh, Mie, and Geometric.

angle, whereas a finite angle will introduce a systematic error. However, a compromise is necessary, since as a zero degree collimation is approached, instrument construction costs, operating stability, and optical alignment problems increase. A transmissometer having a 5 degree collimating angle applied to the emissions of a pulverized coal-fired stream generator gave an opacity measurement that was about 5% low relative to the zero degree value.

The error in the transmissometer measurement due to the use of different light detection angles has been analyzed theoretically by Ensor and Pilat and was shown to be a function of detection angle and particle size.[110] They showed that, in general, the error associated with a given detector viewing angle increases with an increase in the particle mean diameter.

In situ transmissometers produce an instantaneous measure of the average opacity created by the differing particle concentrations that exist along the line of sight of the transmissometer light beam. This eliminates the need for traversing the stack as is done for point measurements or extractive measurements. However, the need for an extractive transmissometer arises when measurement is to be made of process streams containing water droplets. (Water vapor does not cause trouble but droplets do.) In such cases, it is necessary to extract and then heat a sample from the stream, thus vaporizing the water droplets.

As opacity, 1-T, approaches zero the relative error in its measurement with a transmissometer becomes unavoidably large. For example, a two per cent error in the transmittance measurement gives a 50 per cent error in an opacity of four per cent. In such cases a nephelometer as used by Ensor,[86] may be a more accurate measure of opacity, although it requires a probe and sampling traverses. This instrument when used as an opacity monitor

attempts to determine E, the extinction coefficient, through a measurement of the scattering coefficient alone where E = scatter-inc coefficient + absorption coefficient. The errors in this type of opacity measurement depend upon the variation of the ratio of aerosol absorption coefficient to the scattering coefficient and the errors associated with extractive sampling. The ratio varies from zero for nonabsorbing particles to about one for highly absorbing ones giving possible errors in opacity up to 100 per cent depending upon the calibration aerosol. However, if a calibration aerosol is chosen judiciously (i.e., with optical properties close to those of the sampled aerosol) and the opacity is low, the nephelometer errors are much smaller than those obtained with the transmissometer at low opacities. Operation of the nephelometer is discussed further, including field test data, in the section on mass monitors.

SECTION IV

PARTICLE SIZE DISTRIBUTIONS

ESTABLISHED TECHNIQUES

Field Measurements

Aerodynamic Methods--

In order to avoid unnecessary complications in data presentation, particles of different shapes may be assigned aerodynamic diameters. The aerodynamic diameter of a particle is the diameter of a unit density sphere that has the same settling velocity as the particle of interest. The aerodynamic diameter is related to the way that a particle will behave in the respiratory system as well as in aerodynamic sizing devices.

Examples of aerodynamic particle sizing instruments are centrifuges, cyclones, cascade impactors, and elutriators. Each of these instruments employs the unique relationship between a particle's diameter and mobility in gas or air to collect and classify the particles by size. For pollution studies cyclones and impactors, primarily the latter, are more useful because they are rugged and compact enough for in situ sampling. As previously explained, in situ sampling is preferred because the measured size distribution may be seriously distorted if a probe is used for sample extraction. In the following two subsections, methods of using impactors and cyclones are discussed.

Cascade impactors--The mechanism by which a cascade impactor operates is illustrated in Figure 28. In each stage of an impactor, the gas stream passes through an orifice and forms a jet that is directed toward an impaction plate. For each stage there is a characteristic particle diameter that has a 50% probability of impaction. This characteristic diameter is called the D_{50} of the stage. Although single jets are shown in Figure 30 for illustrative purposes, commercial impactors may have from one to several hundred jets in a stage. Typically, an impactor has five to ten stages.

The particle collection efficiency of a particular impactor jet-plate combination is determined by such properties of the aerosol such as; the particle shape and density, by the viscosity of the gas, and by the design of the impactor stage (that is the shape of the jet, the diameter of the jet and the jet-to-plate spacing).[111,112,113,114,115] There is also a slight dependence on the type of collection surface used (glass fiber, grease, metal, etc.).[116,117,118]

Most modern impactor designs are based on the semi-empirical theory of Ranz and Wong.[119] Although more sophisticated theories have been developed,[120,121,122] these are more difficult to apply. Since variations from ideal behavior in actual impactors dictate that they be calibrated experimentally, the theory of Ranz and Wong is generally satisfactory for the selection of jet diameters. Cohen and Montan,[111] Marple and Willeke,[112] and Newton et al.,[114] have published papers that summarize the important results from theoretical and experimental studies to determine the most important factors in impactor performance:

1. The jet Reynolds number should be between 100 and 3000.

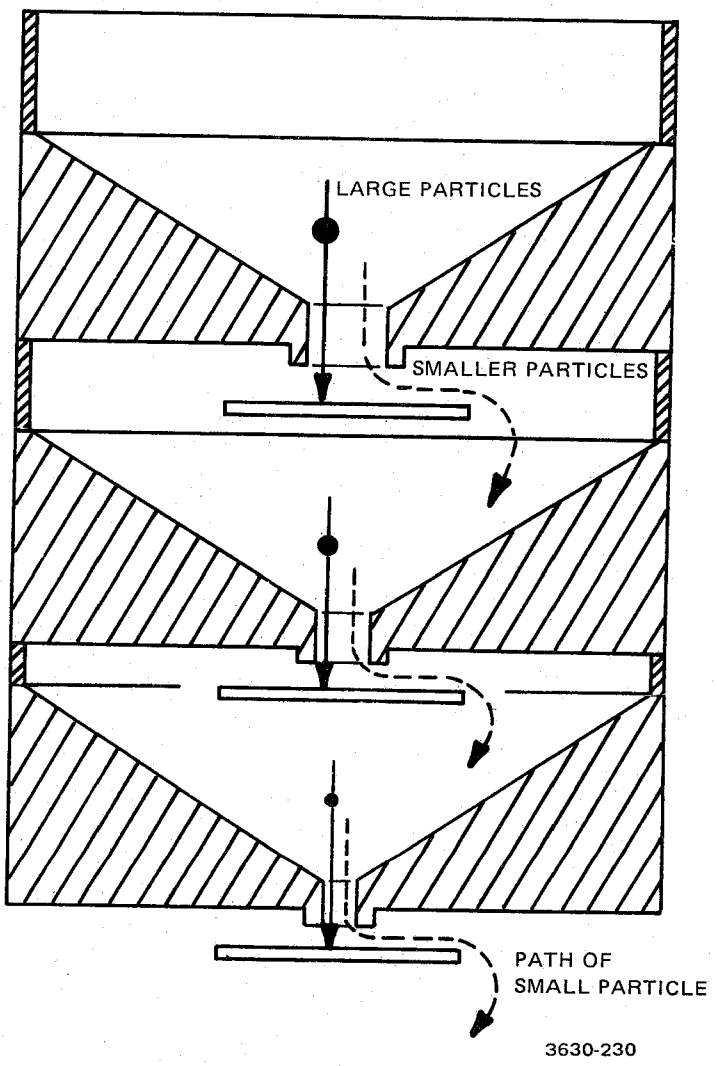

Figure 28. Schematic diagram, operation of cascade impactor.

2. The jet velocity should be 10 times greater than the settling velocity of particles having the stage D_{50}.

3. The jet velocity should be less than 110 m/sec.

4. The jet diameter should not be smaller than can be attained by conventional machining technology.

5. The ratio of the jet-plate spacing and the jet diameter or width (S/W) should lie between 1 and 3.

6. The ratio of the jet throat length to the jet diameter (T/W) should be approximately equal to unity.

7. The jet entries should be streamlined or countersunk.

Smith and McCain[123] have observed that the jet velocity for optimum collection of dry particles may be as low as 10 m/sec, which places a more stringent criterion on impactor design and operation.

Figures 29 and 30 are charts that summarize the design criteria for cascade impactors. It can be seen that it is almost impossible to achieve D_{50}'s of 0.2-0.3 μm without violating some of the recommended guidelines.

Table IX lists six commercially available cascade impactors that are designed for instack use, and tables X through XIV show some geometric and operating parameters for the commercial impactors. Schematic diagrams of five commercially available impactors are shown in Figure 31.

The impactors are all constructed of stainless steel for corrosion resistance. All have round jets, except the Sierra

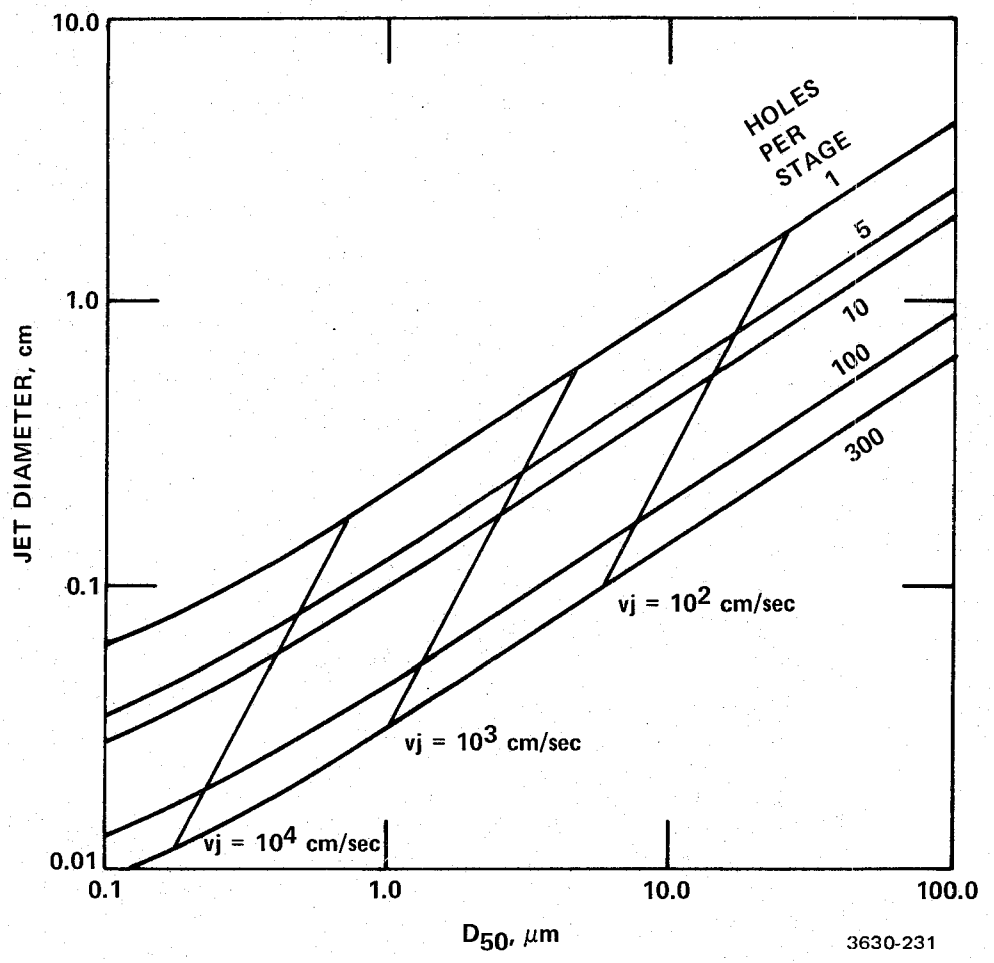

Figure 29. Approximate relationship among jet diameter, number of jets per stage, jet velocity, and stage cut point for circular jet impactors. From Smith and McCain.[123]

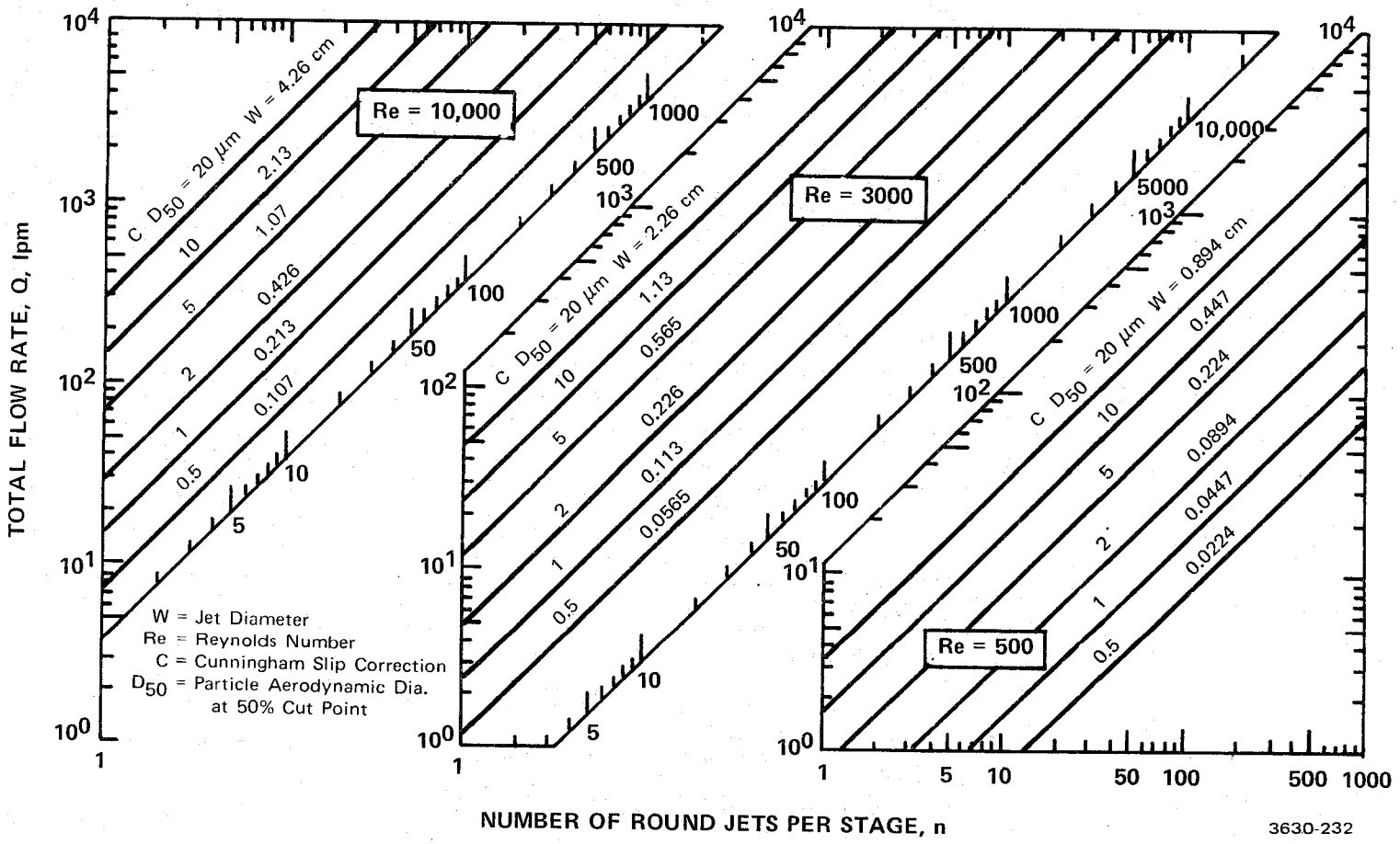

Figure 30. Design chart for round impactors. (D_{50} = aerodynamic diameter at 50% cut point.) After Marple.[112]

TABLE IX

COMMERCIAL CASCADE IMPACTOR SAMPLING SYSTEMS

Name	Nominal Flow rate (cm^3/sec)	Substrates	Manufacturer
Andersen Stack Sampler (Precollection Cyclone Avail.)	236	Glass Fiber (Available from manufacturer)	Andersen 2000, Inc. P.O. Box 20769 Atlanta, GA 30320
Univ. of Washington Mark III Source Test Cascade Impactor (Precollection Cyclone Avail.)	236	Stainless Steel Inserts, Glass Fiber, Grease	Pollution Control System Corp. 321 Evergreen Bldg. Renton, WA 98055
Univ. of Washington Mark V	100	Stainless Steel Inserts, Glass Fiber, Grease	Pollution Control System Corp. 321 Evergreen Bldg. Renton, WA 98055
Brink Cascade Impactor (Precollection Cyclone Avail.)	14.2	Glass Fiber, Aluminum, Grease	Monsanto EviroChem Systems, Inc. St. Louis, MO 63166
Sierra Source Cascade Impactor - Model 226 (Precollection Cyclone Avail.)	118	Glass Fiber (Available from manufacturer)	Sierra Instruments, Inc P.O. Box 909 Village Square Carmel Valley, CA 9392
MRI Inertial Cascade Impactor	236	Stainless Steel, Alumnnum, Mylar, Teflon. Optional: Gold, Silver, Nickel	Meteorology Research, Inc. Box 637 Altadena, CA 91001

TABLE X.

CASCADE IMPACTOR STAGE PARAMETERS

ANDERSON MARK III STACK SAMPLER

Stage No.	No. of Jets	D_j-Jet Diameter (cm)	S-Jet to Plate Distance (cm)	$\frac{S}{D_j}$	Reynolds Number	Jet Velocity (m/sec)	Cumulative Fraction of Impactor Pressure Drop at each stage
1	264	.1638	.254	1.55	45	0.4	0.0
2	264	.1253	.254	2.03	59	0.8	0.0
3	264	.0948	.254	2.68	78	1.3	0.0
4	264	.0759	.254	3.35	98	2.0	0.0
5	264	.0567	.254	4.48	131	3.6	0.0
6	264	.0359	.254	7.08	206	9.0	0.2
7	264	.0261	.254	9.73	284	17.1	0.3
8	156	.0251	.254	10.12	500	31.5	1.0

TABLE XI.

CASCADE IMPACTOR STAGE PARAMETERS

MODIFIED BRINK MODEL B CASCADE IMPACTOR

Stage No.	No. of Jets	D_j-Jet Diameter (cm)	S-Jet to Plate Distance (cm)	$\frac{S}{D_j}$	Reynolds Number	Jet Velocity (m/sec)	Cumulative Fraction of Impactor Pressure Drop at each stage
0	1	.3598	1.016	2.82	326	1.4	0.0
1	1	.2439	0.749	3.07	481	3.0	0.0
2	1	.1755	0.544	3.10	669	6.0	0.0
3	1	.1375	0.424	3.08	853	9.7	0.0
4	1	.0930	0.277	2.98	1263	21.2	0.065
5	1	.0726	0.213	2.93	1617	35.3	0.255
6	1	.0573	0.191	3.33	2049	58.8	1.000

TABLE XII.

CASCADE IMPACTOR STAGE PARAMETERS

MRI MODEL 1502 INERTIAL CASCADE IMPACTORS

Stage No.	No. of Jets	D_j-Jet Diameter (cm)	S-Jet to Plate Distance (cm)	$\frac{S}{D_j}$	Reynolds Number	Jet Velocity (m/sec)	Cumulative Fraction of Impactor Pressure Drop at each stage
1	8	0.870	0.767	.88	281	0.5	0.0
2	12	0.476	0.419	.88	341	1.1	0.0
3	24	0.205	0.191	.96	411	3.2	0.0
4	24	0.118	0.191	1.61	684	8.9	0.0
5	24	0.084	0.191	2.27	973	18.2	0.045
6	24	0.052	0.191	3.60	1530	45.9	0.216
7	12	0.052	0.191	3.60	3059	102.3	1.000

TABLE XIII.

CASCADE IMPACTOR STAGE PARAMETERS

SIERRA MODEL 226 SOURCE SAMPLER

Stage No.	W-Jet Slit Width (cm)	Jet Slit Length (cm)	S-Jet to Plate Distance (cm)	$\frac{S}{W}$	Reynolds Number (@14.16 lpm)	Jet Velocity (m/sec) (@14.16 lpm)	Cumulative Fraction of Impactor Pressure Drop at each Stage
1	0.3590	5.156	0.635	1.77	602	1.3	0.0
2	0.1988	5.152	0.318	1.60	602	2.3	0.0
3	0.1147	3.882	0.239	2.08	800	5.4	0.0
4	0.0627	3.844	0.239	3.81	808	10.0	0.154
5	0.0358	3.869	0.239	6.68	802	17.4	0.308
6	0.0288	2.301	0.239	8.30	1348	36.9	1.000

TABLE XIV

CASCADE IMPACTOR STAGE PARAMETERS

UNIVERSITY OF WASHINGTON MARK III SOURCE TEST CASCADE IMPACTOR

Stage No.	No. of Jets	D_j-Jet Diameter (cm)	S-Jet to Plate Distance (cm)	$\frac{S}{D_j}$	Reynolds Number	Jet Velocity (m/sec)	Cumulative Fraction of Impactor Pressure Drop at each Stage
1	1	1.842	1.422	.78	1073	0.9	0.0
2	6	0.577	0.648	1.12	565	1.5	0.0
3	12	0.250	0.318	1.27	653	4.1	0.0
4	90	0.0808	0.318	3.94	269	5.2	0.019
5	110	0.0524	0.318	6.07	340	10.2	0.057
6	110	0.0333	0.318	9.55	535	25.4	0.189
7	90	0.0245	0.318	12.98	929	60.0	1.000

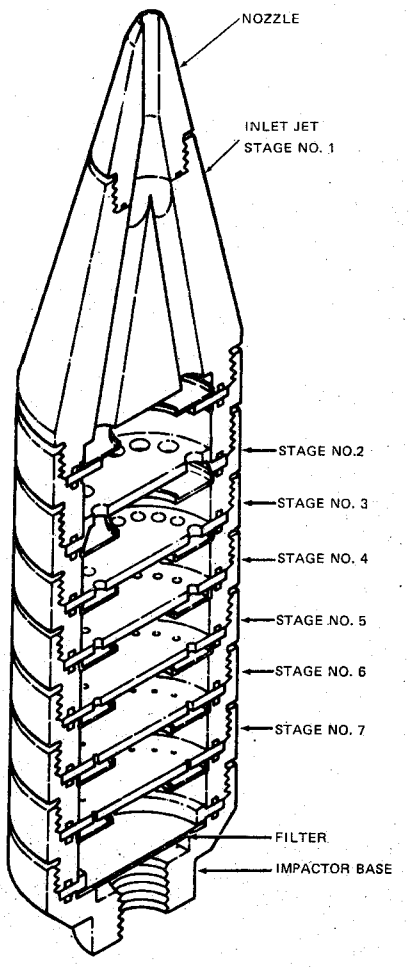

MRI MODEL 1502

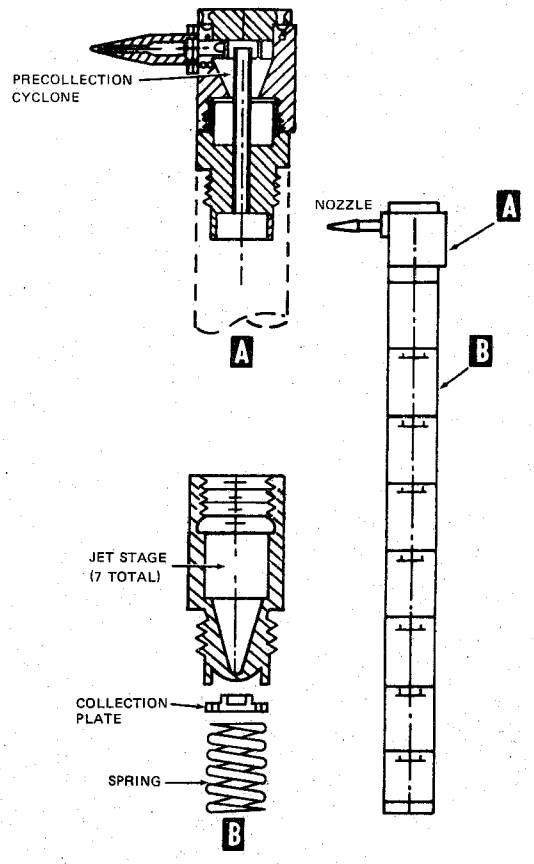

MODIFIED BRINK

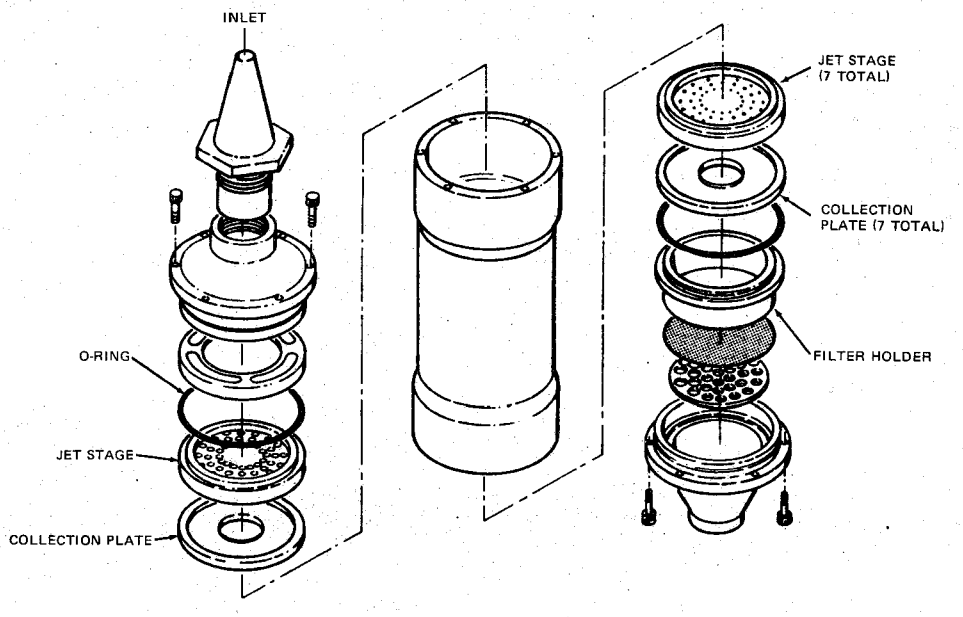

UNIVERSITY OF WASHINGTON MARK III

3630-269

Figure 31. Schematics of five commercial cascade impactors (Sheet 1 of 2).

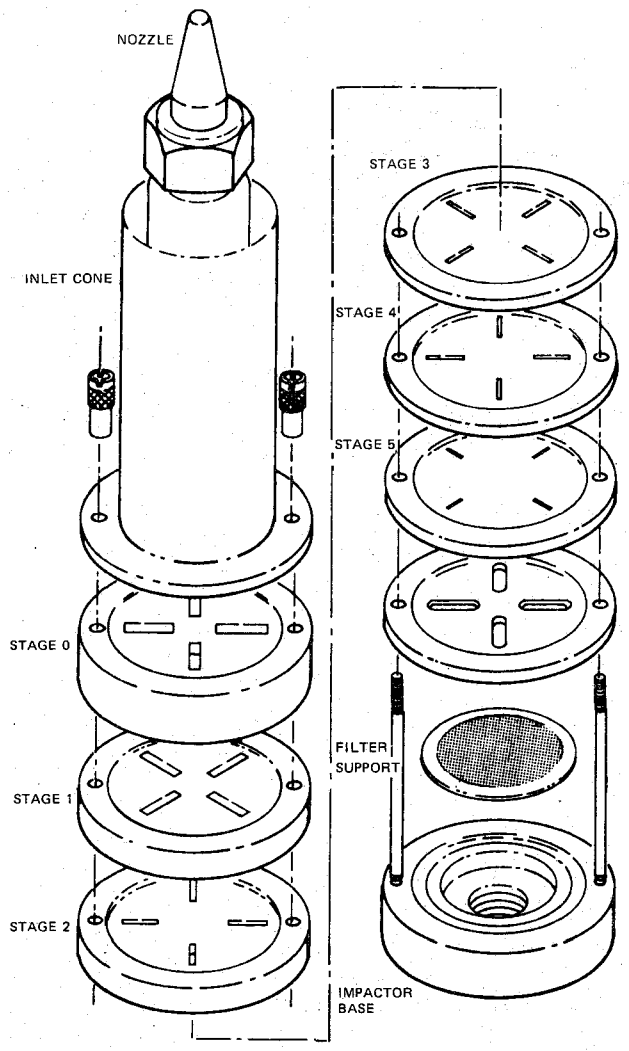

SIERRA MODEL 226

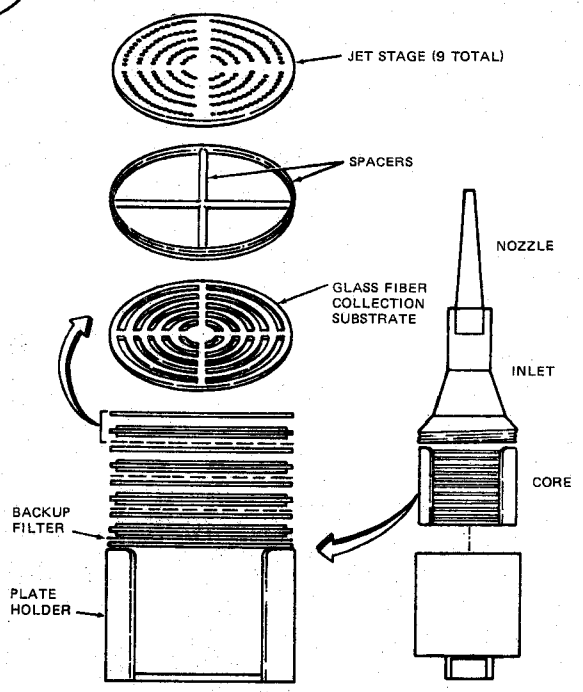

ANDERSON MARK III 3630-233

Figure 31. Schematics of five commercial cascade impactors (Sheet 2 of 2).

Model 226, which is a radial slit design, and all have stages with multiple jets, except the Brink. It is customary to operate the impactors at a constant flowrate during a test so that the D_{50}'s will remain constant. The impactor flowrate is chosen, within a fairly narrow allowable range, to give a certain sampling velocity at the nozzle inlet. Streamlined nozzles of different diameters are provided to allow the sample to be taken at a velocity equal to that of the gas stream.

Since the impaction plates weigh a gram or more, and the typical mass collected on a plate during a test is on the order of 1-10 mg, it is often necessary to place a light weight collection substrate over the impaction plate to reduce the tare. These substrates are usually glass fiber filter material or greased aluminum foil. A second function of the substrates is to reduce particle bounce.

Cushing, et al. have done extensive calibration studies of the commercial, instack, cascade impactors.[117] Figure 32 shows results from calibration of the Andersen Mark III impactor that are similar to the performance of the other types as well. Similar results have been reported by Mercer and Stafford,[122] Rao and Whitby,[116] and Calvert, et al.[124] for impactors of different design. Notice that the collection efficiency increases, as particle size increases, up to a maximum value that is less than 100%. The decrease in collection efficiency for large particles represents bounce and can introduce serious errors in the calculated particle-size distribution.

There has not been an extensive evaluation of cascade impactors under field conditions, although some preliminary work was reported by McCain, et al.[125] It is difficult to judge from existing data exactly how accurate impactors are, or how well

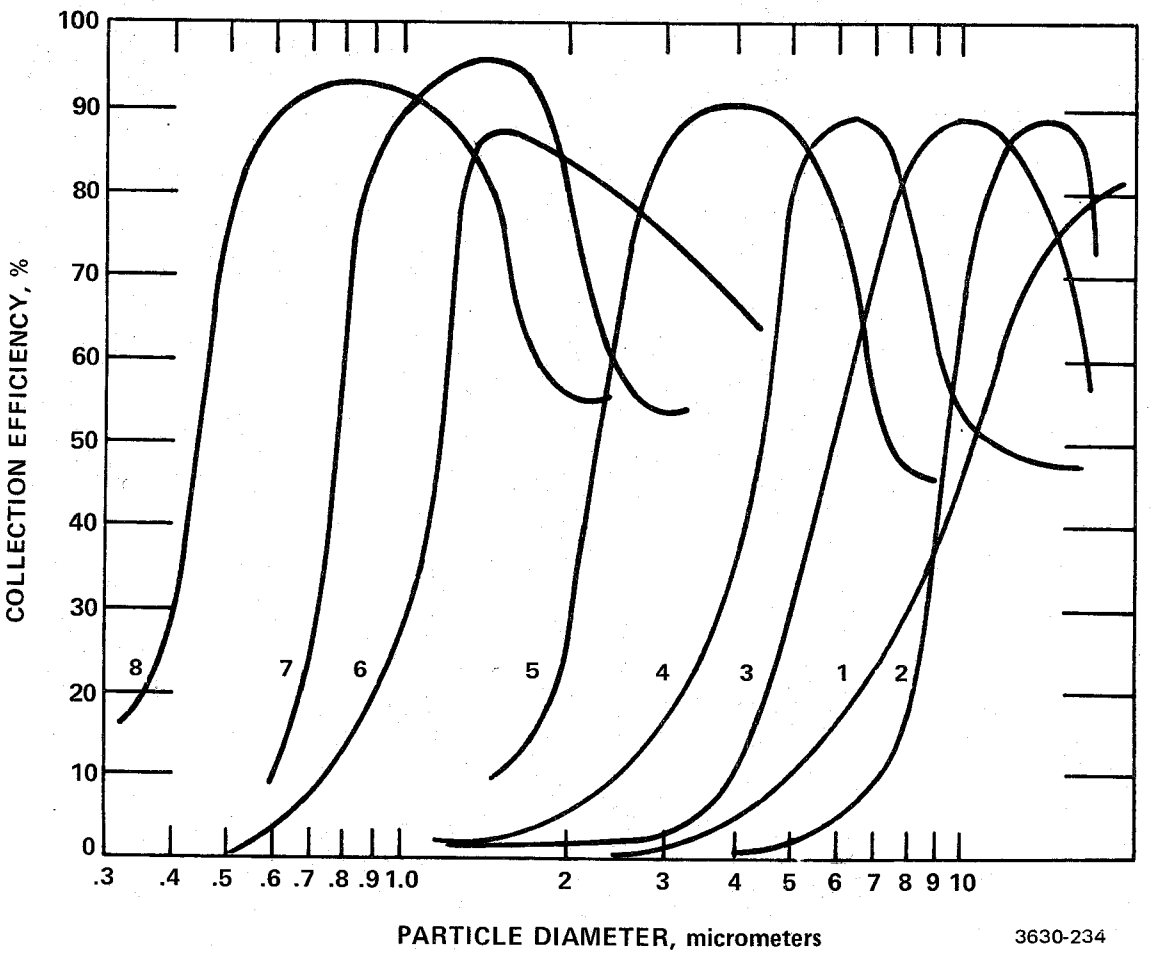

Figure 32. Calibration of an Anderson Mark III impactor. Collection efficiency vs. particle size for stages 1 through 8. After Cushing, et al.[117]

the data taken by different groups or with different impactors will correlate. Problems that are known to exist in the application of impactors in the field are: substrate instability,[122,26] the presence of charge on the aerosol particles,[126] particle bounce,[116,122] and mechanical problems in the operation of the impactor systems.

In the past, the reduction of data from an extensive field test has been excessively tedious and time consuming. However, a powerful computer program is now available that decreases the effort required to reduce and analyze impactor data by approximately a factor of five.[127]

Research is continuing to improve the hardware and techniques for making particle-size measurements with impactors. At the present time, it is necessary that the operators be experienced and that great care be exercised to avoid many potential sources of errors in order to obtain reliable results.

Cyclones--Cyclones have been used for many years as devices for cleaning dusty air and also to separate respirable and nonrespirable dusts in personnel exposure monitors. Strauss[128] has reviewed in detail the theory, design, and performance of industrial cyclones, while Lippmann and Chan have performed several experimental/theoretical studies of the small cyclones used as personnel exposure monitors.[129,130] In general it can be said that the existing theories are not accurate enough to design cyclones for particle sizing, and thus such designs must be developed empirically.

Figure 33 illustrates a typical reverse flow cyclone. The aerosol sample enters the cyclone through a tangential inlet and forms a vortex flow pattern. Particles move outward toward the cyclone wall with velocity that is determined by the geometry and flowrate in the cyclone, and by their size. Large particles

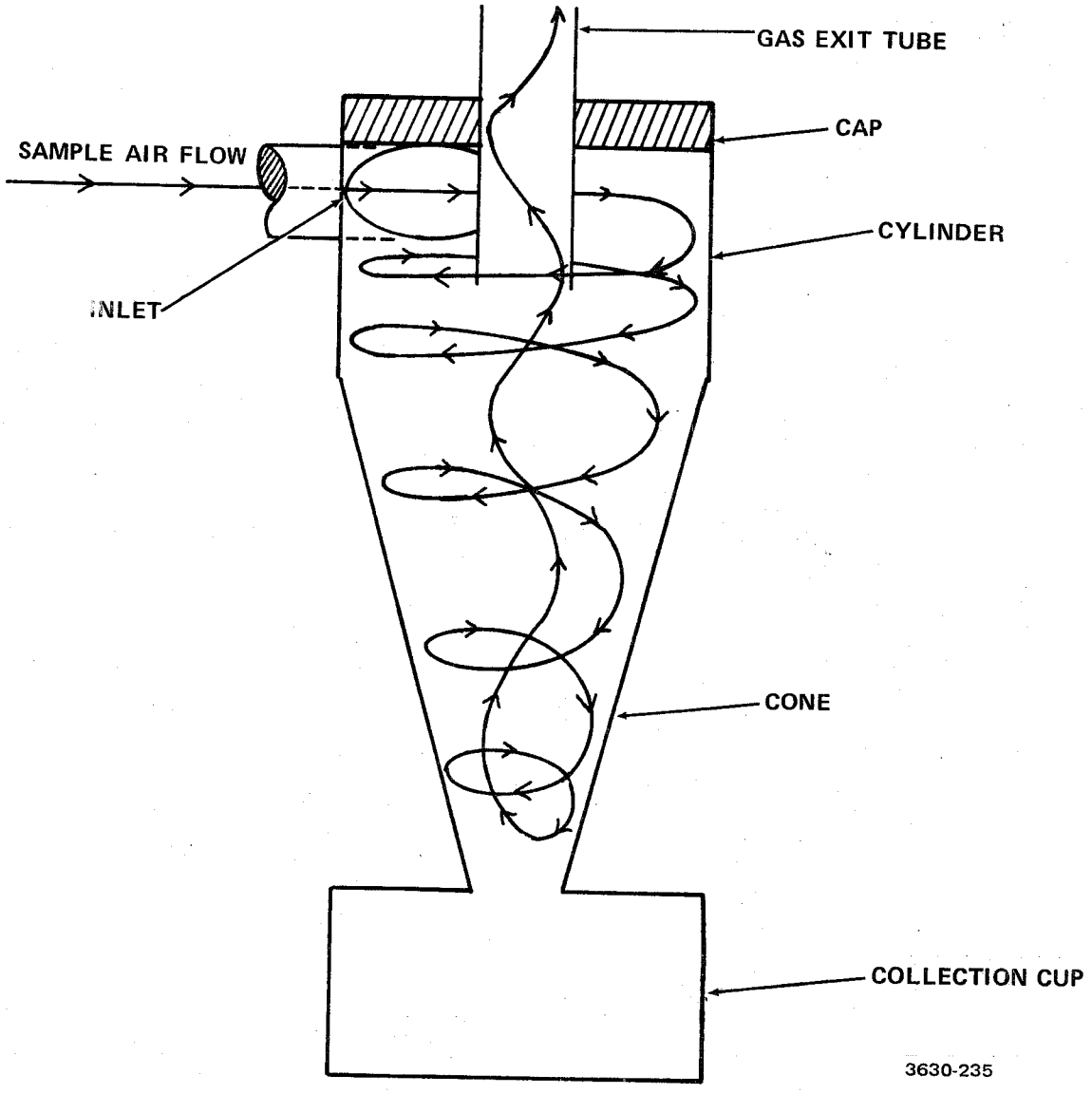

Figure 33. Hypothetical flow through typical reverse flow cyclone.

reach the walls and are collected. Figure 34 compares the calibration curve for a small cyclone with a typical impactor calibration curve. The cyclone can be seen to perform almost as well as the impactor, and the problem of large particle bounce and reentrainment is absent.

Several theories have been proposed in attempts to describe the efficiency of particle collection by cyclones. The majority of the theoretical equations, however, were developed for cyclone design in industrial gas cleaning applications. Typically, the theories include terms for the centripetal and aerodynamic drag forces on the aerosol particles. As with impactors, cyclone performance may be conveniently expressed in terms of a characteristic D_{50}, which is the diameter of particles that are collected with 50% efficiency. In their recent experiments with small cyclones, Chan and Lippmann[130] have observed that most cyclone performance data can be fitted by equations of the form

$$D_{50} = KQ^n \tag{8}$$

where:

K is an empirical constant,
Q is the sample flow rate, and
n is an empirical constant.

Unfortunately, K and n are different for each cyclone geometry, and apparently are impossible to predict. In their study, Chan and Lippmann found K to vary from 6.17 to 4591, and n from -0.636 to -2.13. A similar study by Smith and Wilson[131] found K to vary from 44 to 14, and n from -0.63 to -1.11 for five small cyclones.

In addition to the flowrate dependence indicated in equation (8), cyclone D_{50}'s also are affected by temperature through the viscosity of the gas. Smith and Wilson found this dependence to be linear, but with a different slope for different cyclone dimensions and flowrates.

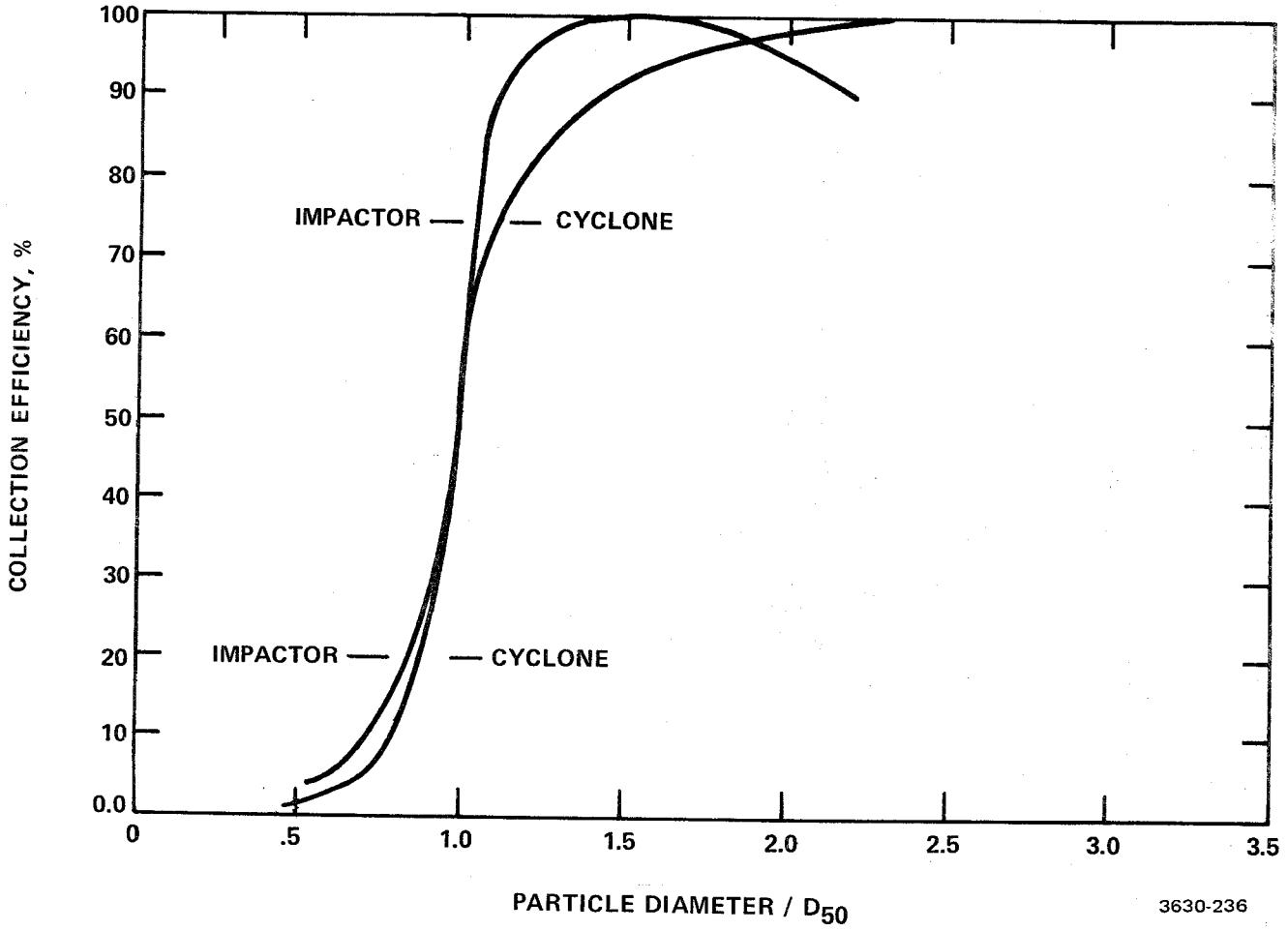

Figure 34. Comparison of cascade impactor stage with cyclone collection efficiency curve.

A series of cyclones with progressively decreasing D_{50}'s can be used instead of impactors to obtain particle size distributions, with the advantages that larger samples are acquired, particle bounce is not a problem, and no substrates are required. Also, longer sampling times are possible with cyclones, which can be an advantage at very dusty streams, or a disadvantage at relatively clean streams.

Figure 35 shows a schematic diagram of a series cyclone system that was described by Rusanov[132] and is used in the Soviet Union for obtaining particle size information. This device is operated instack, but because of the rather large dimensions, requires a 20 cm diameter port for entry.

Southern Research Institute, under EPA sponsorship, has designed and built a prototype three-stage series cyclone system for in-stack use.[133] A sketch of this system is shown in Figure 36. It is designed to operate at 472 cm^3/sec (1 ft^3/min). The D_{50}'s for these cyclones are 3.0, 1.6, and 0.6 micrometer aerodynamic at 21°C. A 47 mm Gelman filter holder, (Gelman Instrument Co., 600 South Wagner Road, Ann Arbor, MI 48106), is used as a back up filter after the last cyclone. This series cyclone system was designed for in-stack use and requires a 15 cm diameter sampling port. Figure 37 shows a comparison of particle-size distributions measured using the cyclone system and cascade impactors.[134]

Figure 38 illustrates a second generation EPA/Southern Research series cyclone system now under development, containing five cyclones and a back up filter. It is a compact system and will fit through 10 cm diameter ports.. The initial prototype was made of anodized aluminum with stainless steel connecting hardware. A second prototype, for in-stack evaluation, is made of titanium.

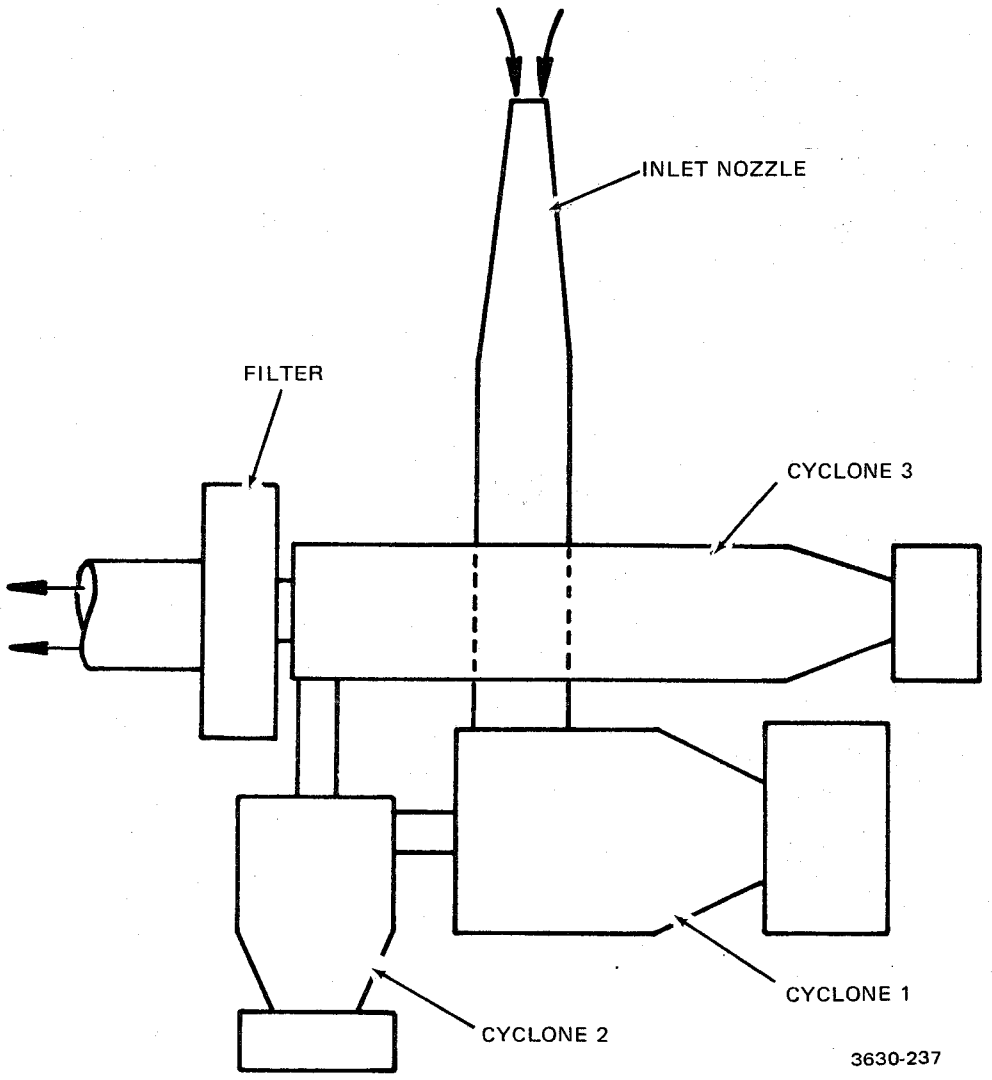

Figure 35. Series cyclone used in the U.S.S.R. for sizing flue gas aerosol particles. From Rusanov.[132]

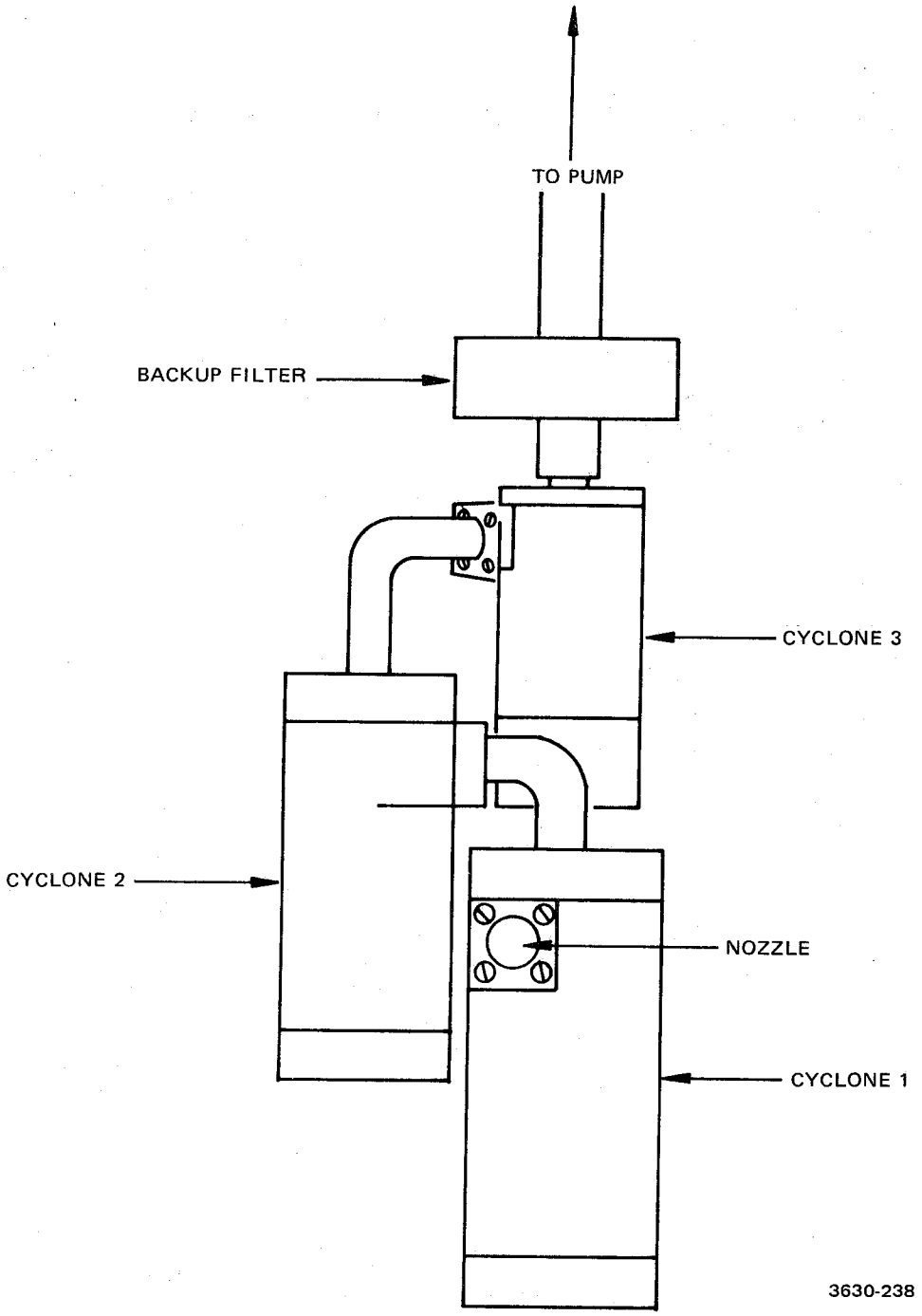

Figure 36. Schematic of the Southern Research Institute Three Series Cyclone System.

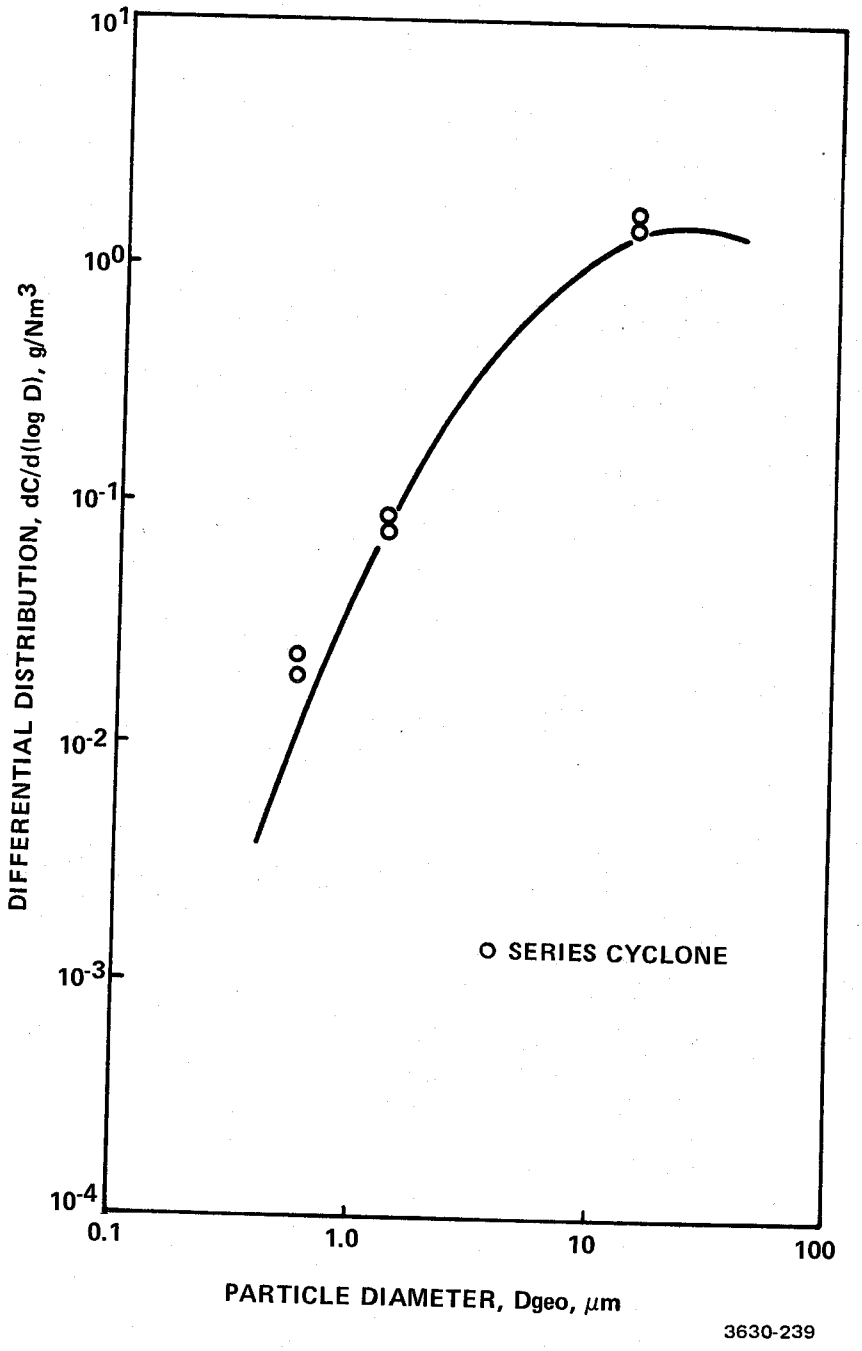

Figure 37. Comparison of Southern Research Institute Three Series Cyclone System data with cascade impactor curve. After Gooding.134

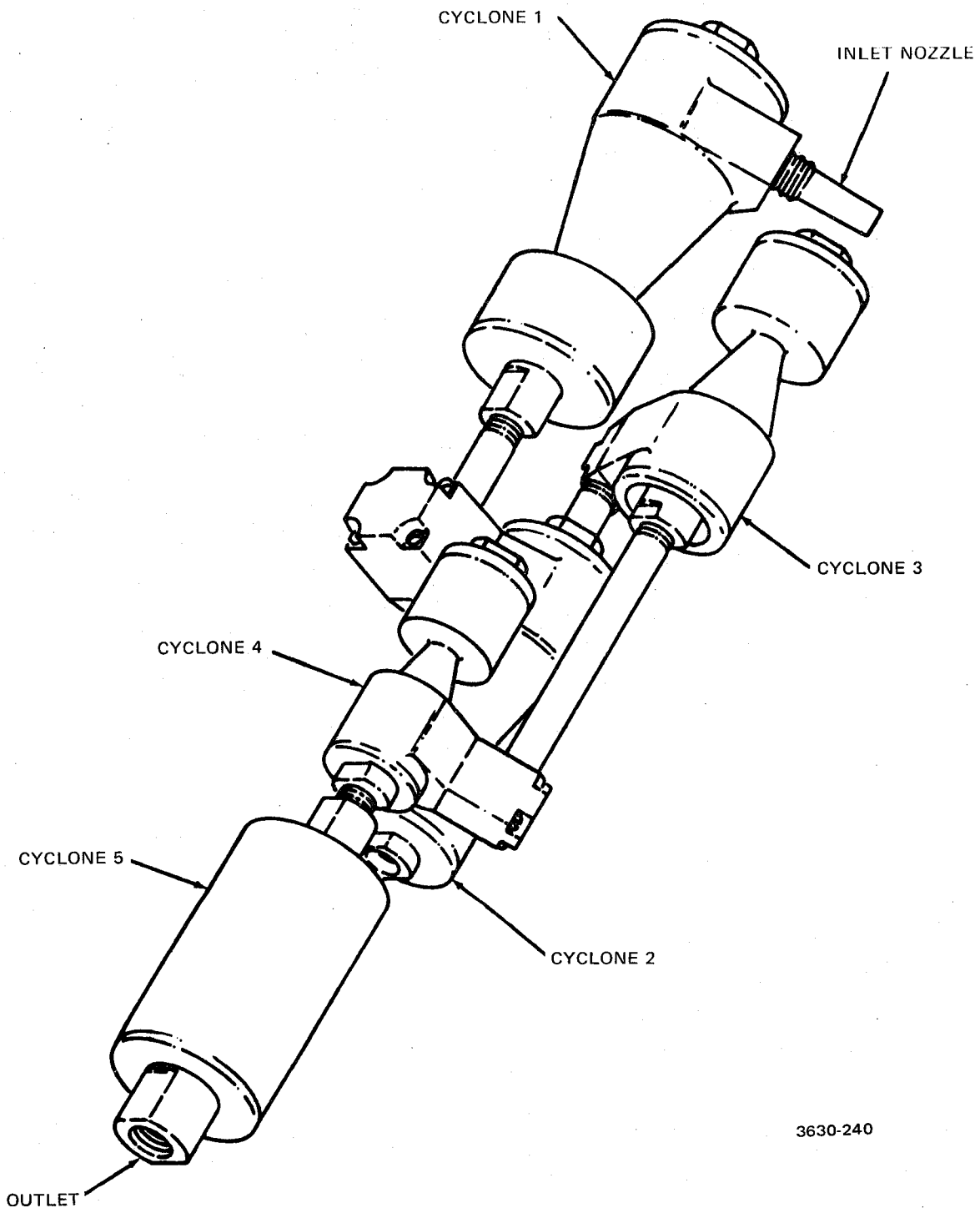

Figure 38. The EPA/Southern Research Institute Five Series Cyclone System.

Figure 39 contains laboratory calibrations data for the five cyclone prototype system. The D_{50}'s, at the test conditions, are 0.32, 0.6, 1.3, 2.6, and 7.5 μm. A continuing research program includes studies to investigate the dependence of the cyclone cut points upon the sample flowrate and temperature so that the behavior of the cyclones at stack conditions can be predicted more accurately.[131]

The Acurex-Aerotherm Source Assessment Sampling System (SASS) incorporates three cyclones and a back-up filter.[135] Shown schematically in Figure 40, the SASS is designed to be operated at a flowrate of 3065 cm^3/sec (6.5 ft^3/min) with nominal cyclone D_{50}'s of 10, 3, and 1 micrometer aerodynamic diameter at a gas temperature of 205°C. The cyclones, which are too large for in situ sampling, are heated in an oven to keep the air stream from the heated extractive probe at stack temperature or above the dew point until the particulate is collected. Besides providing particle size distribution information, the cyclones collect gram quantities of dust (due to the high flowrate) for later chemical and biological analyses. The SASS train is available from Acurex-Aerotherm, Inc., 485 Clyde Ave., Mountain View, California 94042.

Small cyclone systems appear to be practical alternatives to cascade impactors as instruments for measuring particle size distributions in process streams under conditions where it is appropriate to sample for longer periods and to obtain larger samples.

Optical Particle Counters--

Figure 41 is a schematic diagram illustrating the principle of operation for optical particle counters. A dilute aerosol stream intersects the focus of a light beam to form an optical "view volume." The photodetector is located so that no light

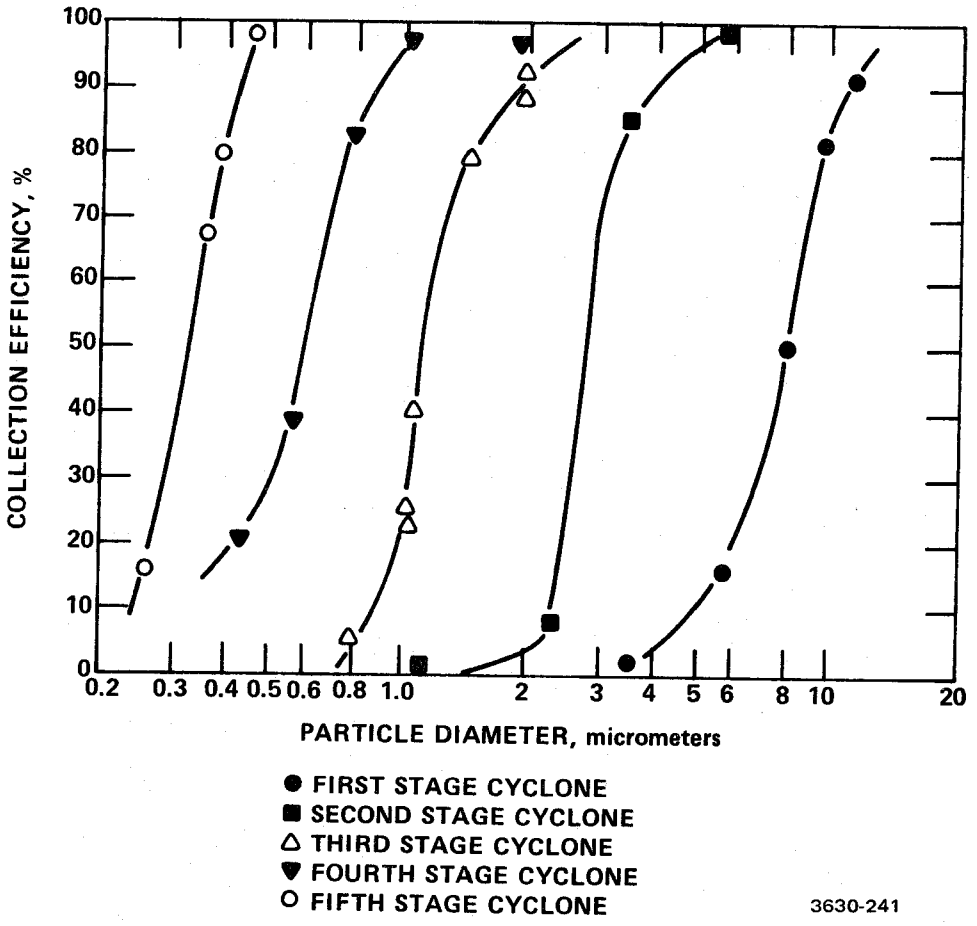

Figure 39. Laboratory calibration of the EPA/Southern Research Institute Five Series Cyclone System. (Flow rate of 28.3 ℓ/min, temperature of 20°C, and particle density of 1 g/cm³.)

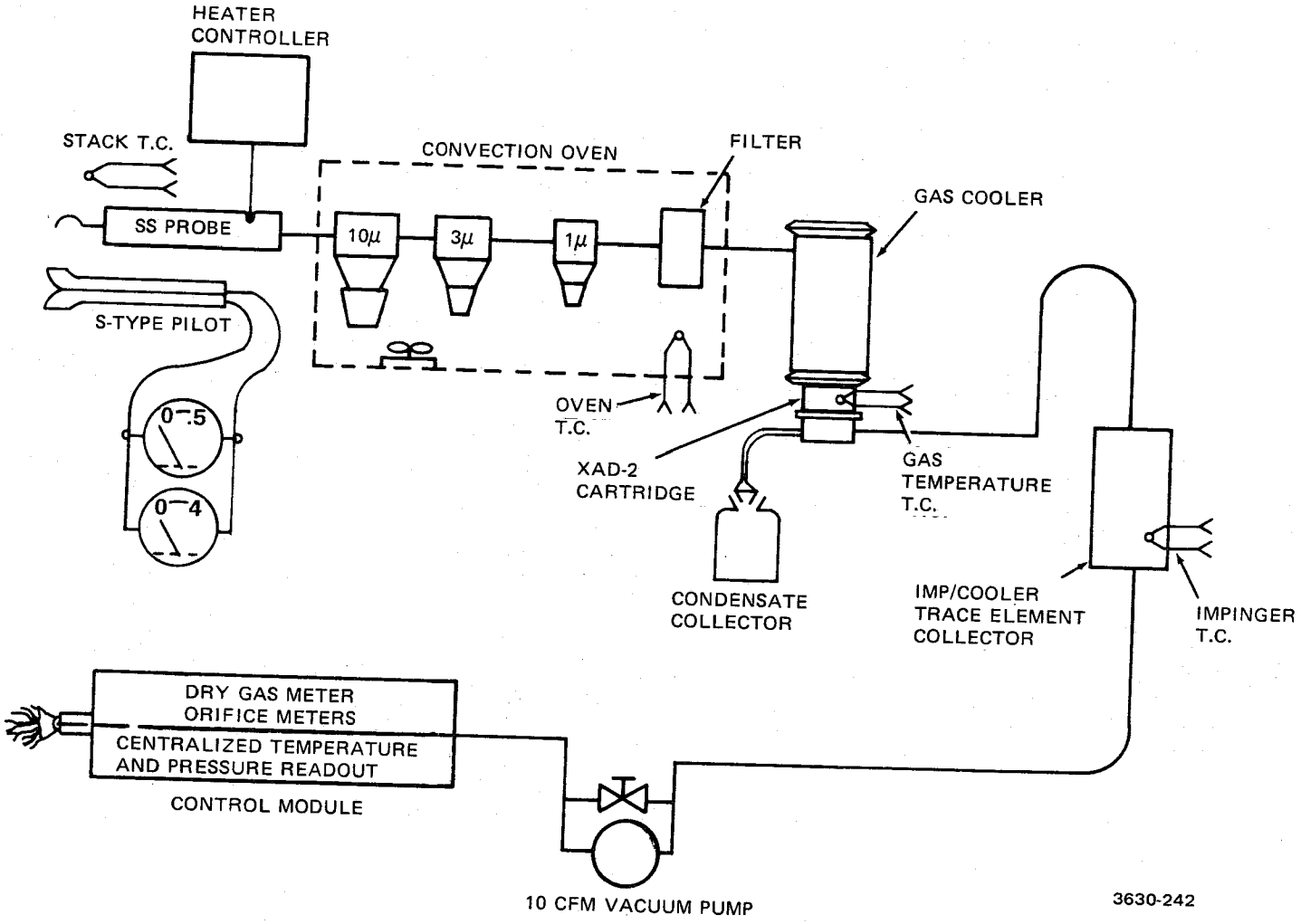

Figure 40. Schematic of the Acurex-Aerotherm Source Assessment Sampling System (SASS).

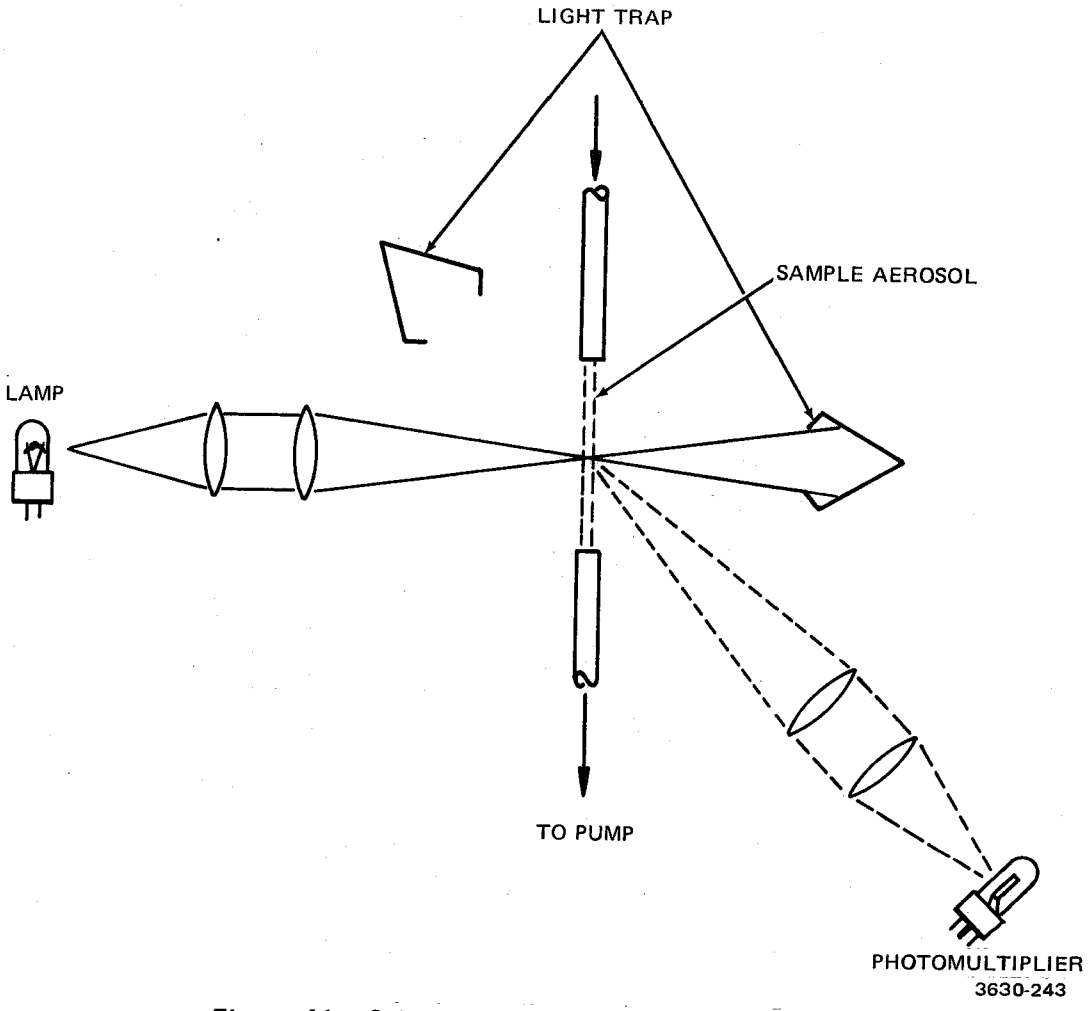

Figure 41. Schematic of an optical single particle counter.

reaches its sensitive cathode except that scattered by particles in the view volume. Thus, each particle that scatters light with enough intensity will generate a current pulse at the photodetector, and the amplitude of the pulse can be related to the particle diameter. Optical particle counters yield real-time information on particle size and concentration.

In an optical particle counter, the intensity of the scattered light and the amplitude of the resulting current pulse depend on the viewing angle, particle refractive index, particle shape, and particle diameter. Different viewing angles and optical geometires are chosen to optimize some aspect of the counter performance. For example, the use of near forward scattering will minimize the dependence of the response on the particle refractive index, but with a severe loss of resolution near 1 μm diameter. The use of right angle scattering smooths out the response curve, but the intensity is more dependent on the particle refractive index. Figure 42 shows calibration data for near forward and right angle scattering particle counters.[136]

Figure 43 illustrates some of the optical configurations that are found in commercial particle counters. The pertinent geometric and operating constants of the counters are summarized in Table XV.

The commercial optical counters that are available now were designed for laboratory work and have concentration limits of a few hundred particles per cubic centimeter. The lower size limit is nominally about 0.3 μm diameter. For use in studies of industrial aerosols, dilution of the sample is required and the useful upper limit in particle size has been limited by losses in the dilution system to about 2.0 μm diameter.[137] In addition, the particle diameter that is measured is not aerodynamic, and some assumptions must be made in order to compare optical with

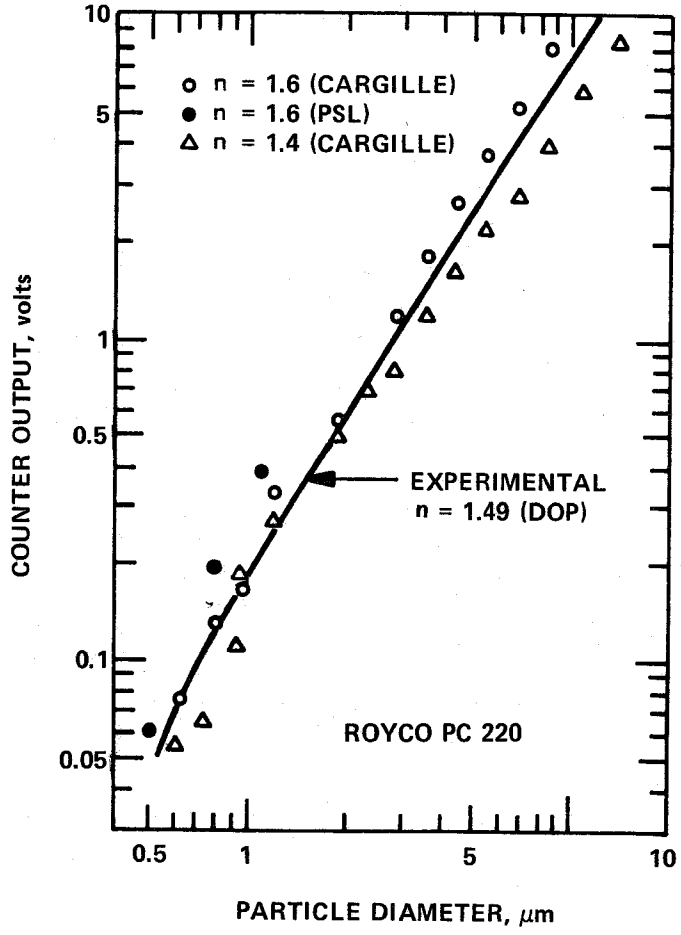

a. Right angle scattering.

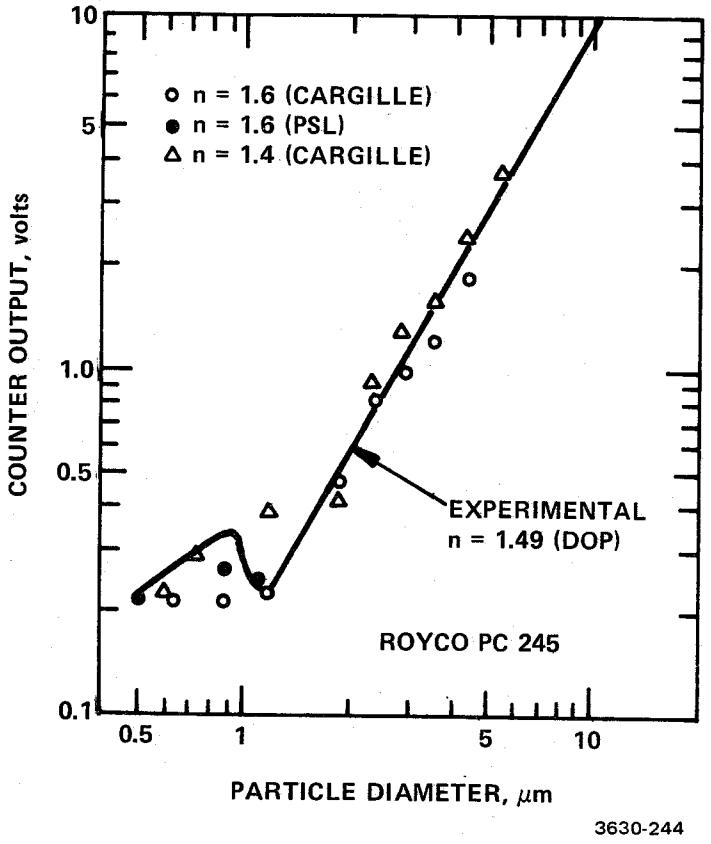

b. Near forward scattering.

Figure 42. Experimental calibration curves for two optical particle counters. After Willeke and Liu.[136]

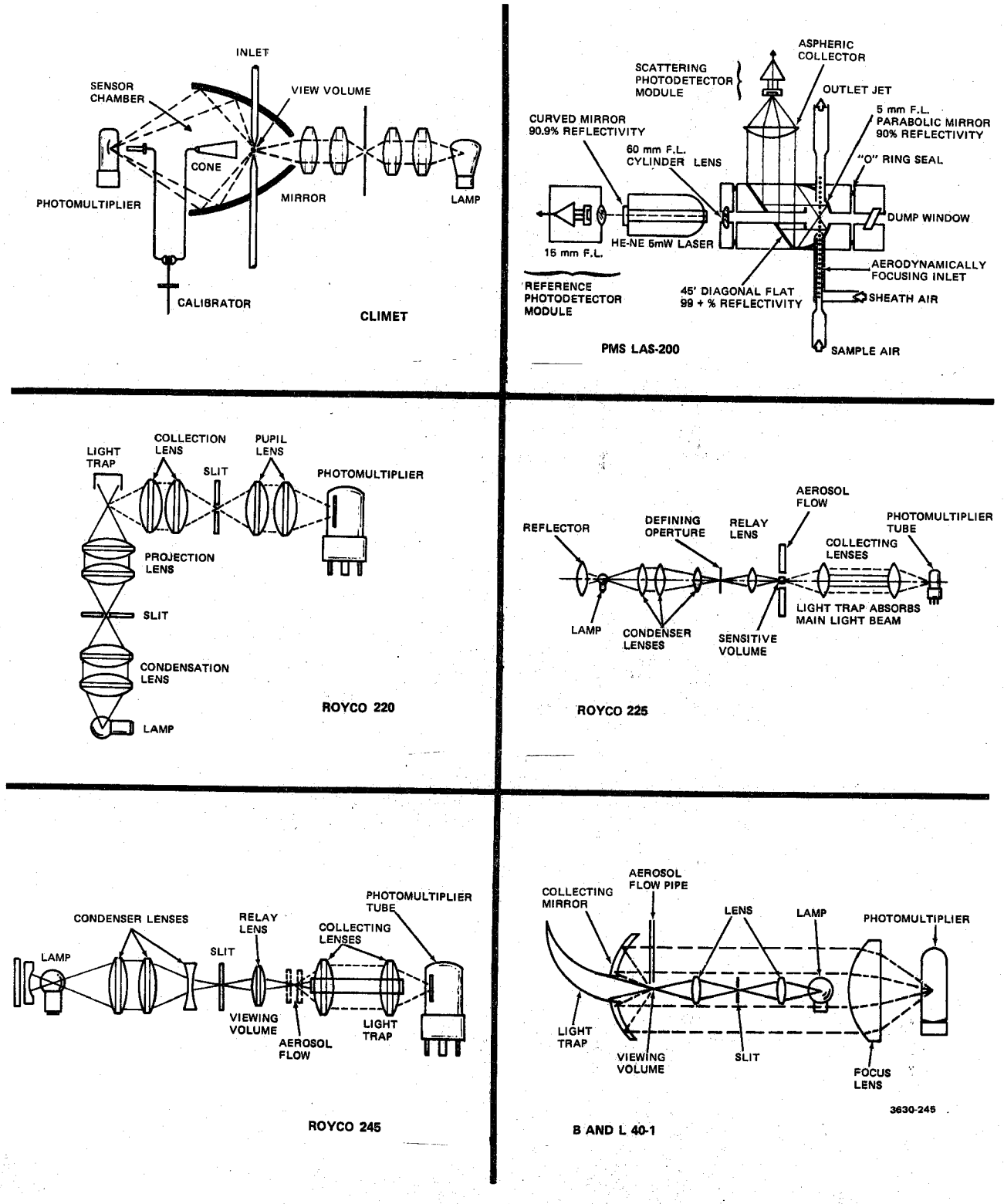

Figure 43. Optical configurations for six commercial particle counters.

TABLE XV.

CHARACTERISTICS OF COMMERCIAL, OPTICAL, PARTICLE COUNTERS

	Illuminating Cone Half Angle, γ	Light Trap Half Angle, α	Collecting Aperture Half Angle, β	Inclination Between Illuminating And Collecting Cone Axis, ψ	Viewing Volume	Sampling Rate
Bausch & Lomb Model 40-1 820 Linden Avel Rochester, NY 14625	13°	33°	53°	0°	0.5 mm^3	170 cm^3/min
Climet Models 201, 208 Climet Inst. Co. 1620 W. Colton Ave. Redlands, CA 92373	15	35	90	0	0.5	7,080
Climet Model 150	12	18	28	0	0.4	472
Royco Model 218 Royco Inst. 41 Jefferson Dr. Menlo Park, CA 94025	5	11	30	0	0.25	283
Royco Model 220	24	-	24	90	2.63	2,830
Royco Model 245	5	16	25	0	4.0	28,300
Royco Model 225	5	7	25	0	2.0	283 or 2,830
Tech Ecology Model 200 Tech Ecology, Inc. 645 N. Mary Ave. Sunnyvalle, CA 94086	5	8	20	0	0.46	283
Tech Ecology Model 208	5	10	20	0	2.5	2,830
*Model LAS-200 Particle Measuring Systems 1855 S. 57th Ct. Boulder, CO 80301	0.5	35	120	0	0.003	120 or 1,200

*632.8 mm laser illum., all others are white light.

aerodynamic data. (It is possible to "calibrate" an optical counter, on a particulate source, to yield aerodynamic data. This is done by using special calibration impactors,[138] or settling chambers.[139]) Nevertheless, the ability to obtain real-time information can sometimes be very important and the special problems in sampling with optical counters may be justified.

Diffusion Batteries with Condensation Nuclei Counters--

The classical technique for measuring the size distribution of submicron particles employs the relationship between particle diffusivity and diameter. In a diffusional sizing system, the test aerosol is drawn, under conditions of laminar flow, through a number of narrow, rectangular channels, a cluster of small bore tubes, or a series of small mesh screens (diffusion batteries). For a given particle diameter and diffusion battery geometry, it is possible to predict the rate at which particles are lost to the walls by diffusion, the rate being higher for smaller particles. The total number of particles penetrating the diffusion battery is measured under several test conditions where the main adjustable parameter is the aerosol retention time, and the particle-size distribution is calculated by means of suitable mathematical deconvolution techniques. It is only necessary that the particle detector that is used at the inlet and outlet of the diffusion battery system respond to the total concentration, by number, of the particles in the size range of interest. Figure 44 illustrates the geometry of a rectangular channel diffusion battery, and Figure 45 a screen-type diffusion battery.

Condensation nuclei (CN) counters function on the principle that particles act as nuclei for the condensation of water or other condensable vapors in a supersaturated environment. This process is used to detect and count particles in the 0.002 to 0.3 micron range (often referred to as condensation or Aitken

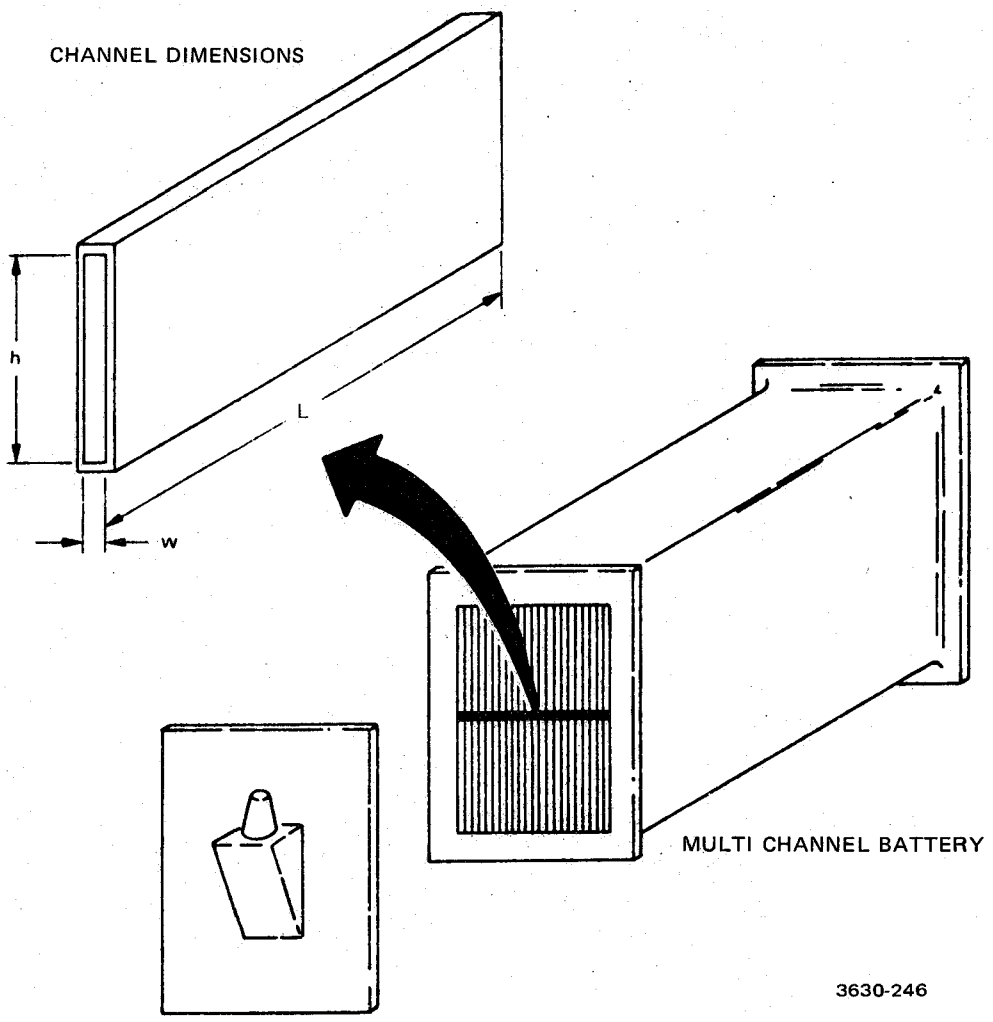

Figure 44. A rectangular channel diffusion battery.

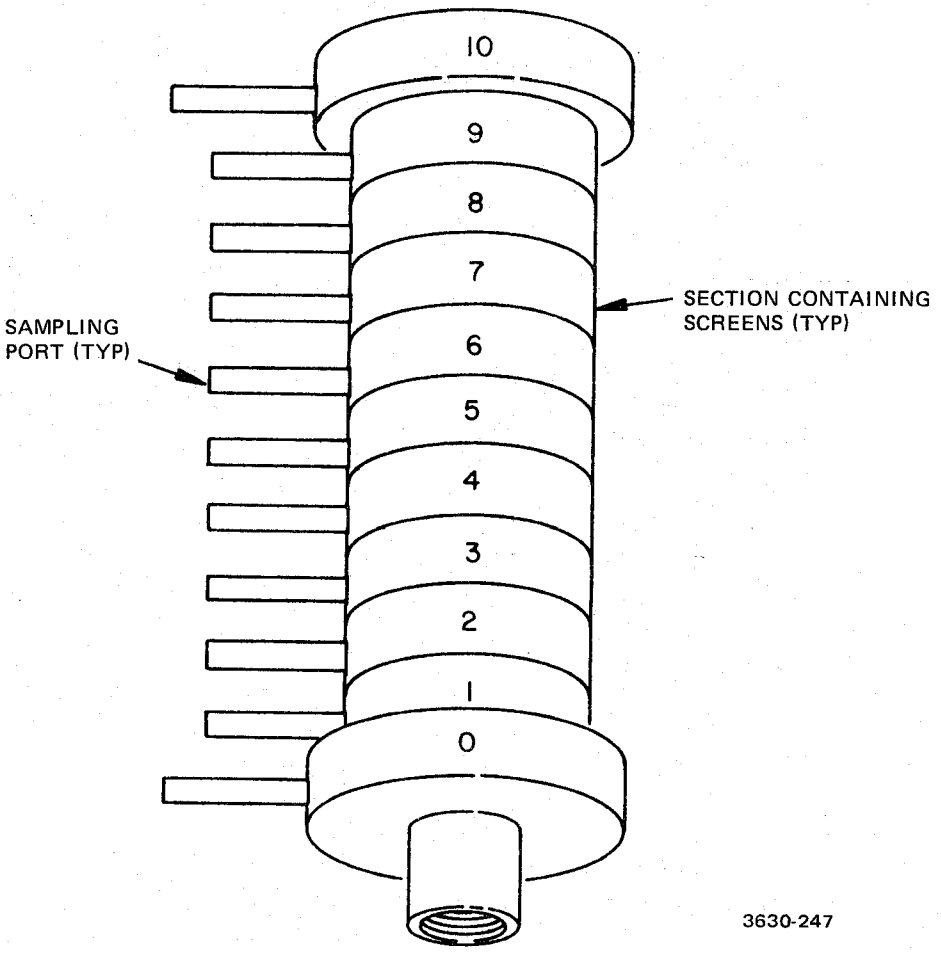

Figure 45. Screen type diffusion battery. The battery is 21 cm long, 4 cm in diameter, and contains 55, 635 mesh stainless steel screens. After Sinclair.[145]

nuclei). In condensation nuclei detectors, a sample is withdrawn from the gas stream, humidified, and brought to a supersaturated condition by reducing the pressure. In this supersaturated condition, condensation will be initiated on all particles larger than a certain critical size and will continue as long as the sample is supersaturated. This condensation process forms a homogeneous aerosol, predominantly composed of the condensed vapor containing one drop for each original particle whose size was greater than the critical size appropriate to the degree of supersaturation obtained; a greater degree of supersaturation is used to initiate growth on smaller particles. The number of particles that are formed is estimated from the light scattering properties of the final aerosol.

Because of the nature of this process, measurements of very high concentrations can be in error as a result of a lack of correspondence between particle concentration and scattering or attenuation of light. Additional errors can result from depletion of the vapor available for condensation. Certain condensation nuclei measuring techniques can also obtain information on the size distribution of the nuclei; that is variations in the degree of supersaturation will provide size discrimination by changing the critical size for which condensation will occur. However, the critical size for initiating condensation is also affected by the volume fraction of water soluble material contained in the original aerosol particle, so the critical size will be uncertain unless the solubility of the aerosol particles is known.[140] At very high degrees of supersaturation (about 400%), solubility effects are only minor and essentially all particles in the original aerosol with diameters larger than 0.002 μm will initiate the condensation process. Figure 46, after Haberl, illustrates the condensation nuclei counter operating principle.[141]

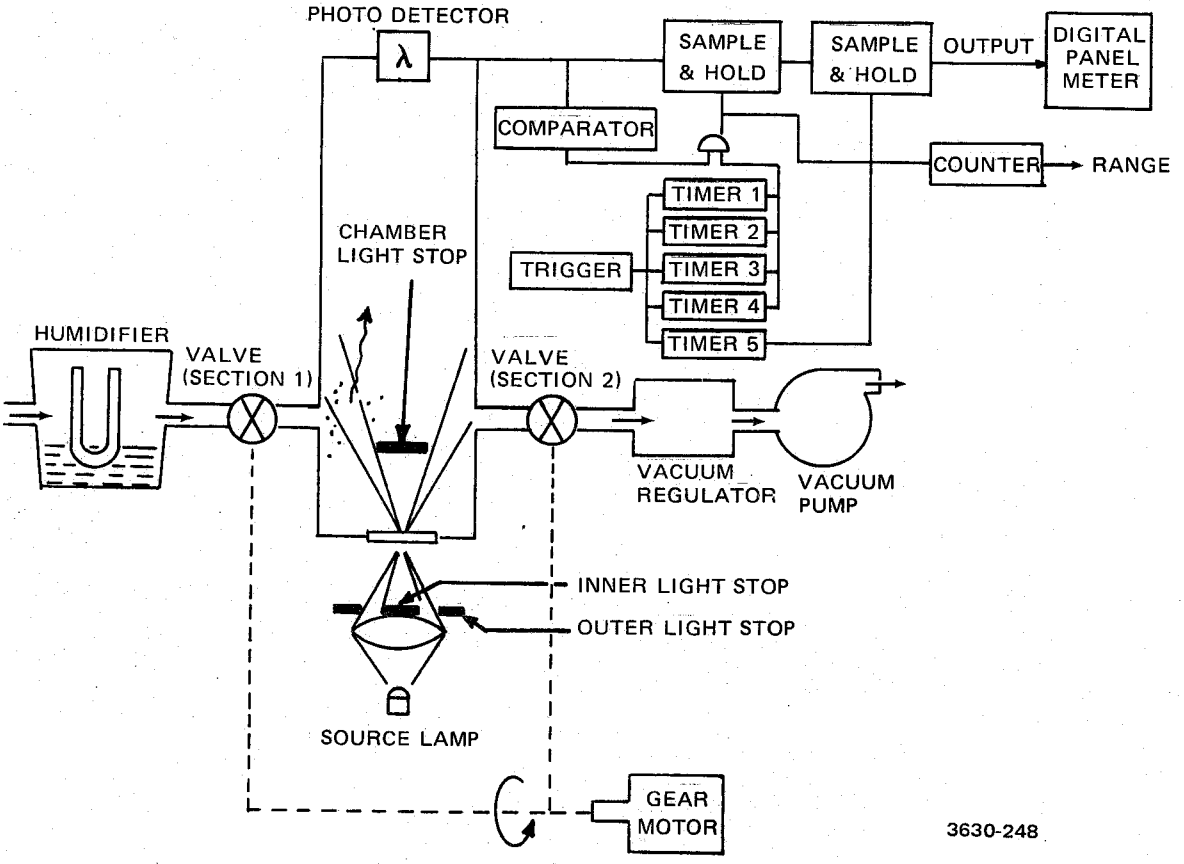

Figure 46. Diagram of a condensation nuclei counter. After Haberl and Fusco.[141]

Figure 47 is a schematic diagram that illustrates an experimental setup for measuring particle-size distributions by diffusional means, and Figure 48 shows penetration curves for four operating configurations.

Fuchs[142] has reviewed diffusional sizing work up until 1956, while Sinclair,[143,144,145] Breslin et al.,[146] Twomey,[149] Sansone and Weyel,[148] and Ragland, et al.,[149] have reported more recent work, both theoretical and experimental.

TSI Incorporated (500 Cardigan Rd., St. Paul, MN 55165) now manufactures and sells screen-type diffusion batteries of Sinclair design (Figure 45). These diffusion batteries are 21 cm long, approximately 4 cm in diameter, weigh 0.9 kg, and contain 55 stainless steel screens of 635 mesh.

Four models of CN counters are now available commercially. Two automatic, or motorized, types are the General Electric Model CNC-2 (General Electric-Ordnance Systems, Electronics Systems Division, Pittsfield, MA 01201) and the Environment-One Model Rich 100 (Environment-One Corporation, Schenectady, NY 12301). Small, manually operated, CN counters are also available from Gardner Associates (Gardner Associates, Schenectady, NY 12301), and Environment-One.

The General Electric CN counter has mechanically actuated valves and is insensitive to moderate pressure variations at the inlet. The aerosol concentration is measured by the detection of scattered light from the test aerosol.

A disadvantage of the flow/valving arrangement in the General Electric counter is the intermittent (1/sec) flow which introduces severe pressure pulsations into the sampling system. This problem

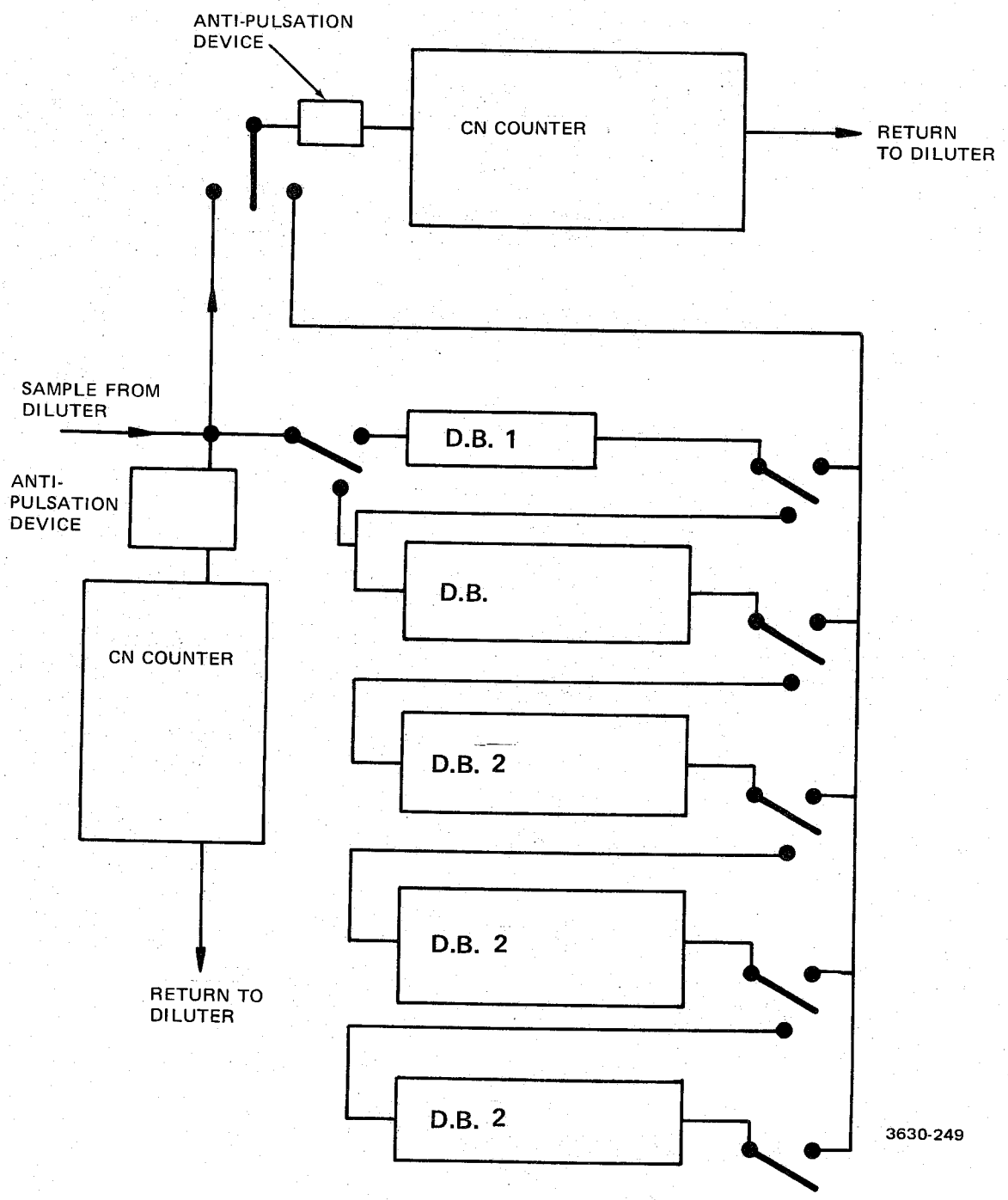

Figure 47. Diffusion battery and condensation nuclei counter layout for fine particle sizing.

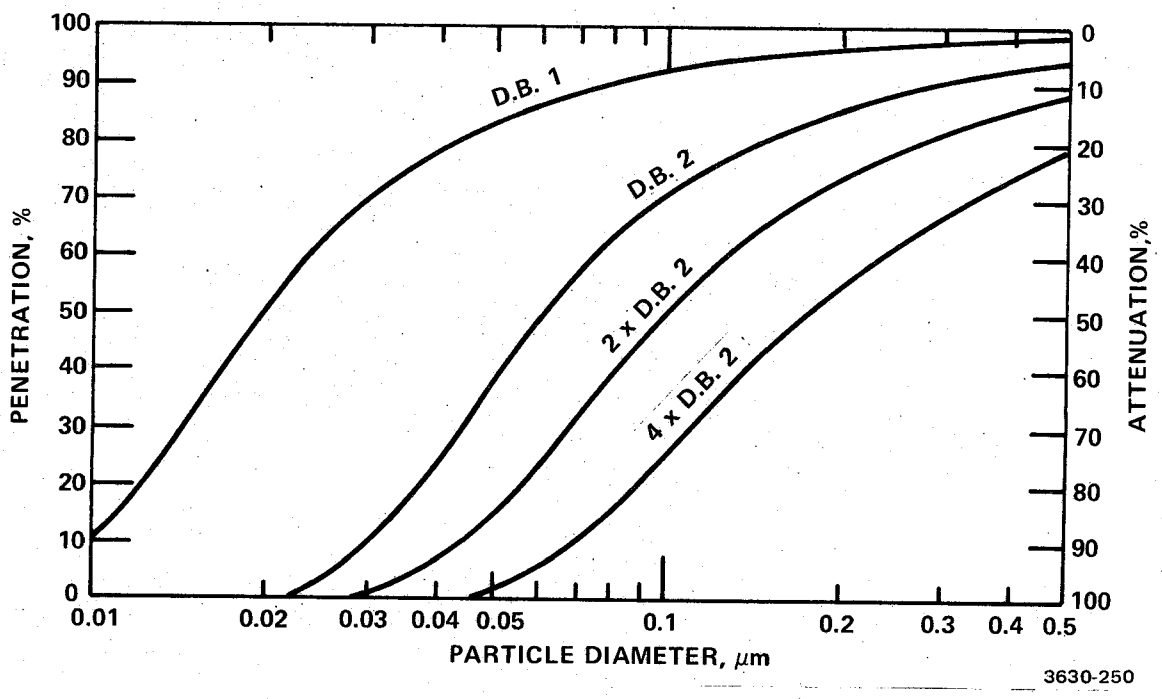

Figure 48. Theoretical parallel plate diffusion battery penetration curves.

has been minimized by the use of antipulsation devices consisting of a rubber diaphram[144] or two metal cylinders connected by a small orifice,[149] essentially pneumatic R-C networks.

The automatic Environment-One counter has some pneumatic valves. A pressure of more than 5 cm of water at the inlet can interrupt the operation. In the E-1, the aerosol concentration is measured by light extinction. The sampling rate of the E-1 counter can be adjusted from about 0.6 to 4.2 ℓ/min. Soderholm has reported a modification to the E-1 counter that replaces pneumatic values with solenoidal ones.[150]

Because of the long retention time required for removal of particles by diffusion, measurements with diffusion batteries and CN counters are very time consuming. With the system described by Ragland, et al., for example, approximately two hours are required to measure a particle-size distribution from 0.01 to 0.2 μm.[149] Obviously, this method is best applied to stable aerosol streams. It is possible that the new, smaller diffusion batteries will allow much shorter sampling times, but pulsations in flow may pose a serious problem for the low volume geometries.

Electrical Mobility--

An instrument that was developed for measuring laboratory and ambient aerosols over the 0.003 to 1 μm range of diameters, the electrical mobility analyzer, can also be applied to process streams with a suitable sample dilution and cooling interface.

Figure 49 illustrates the relationship between the diameter and electrical mobility of small aerosol particles. If particles larger than those of minimum mobility are removed from the sample, the remaining particles exhibit a monotonically decreasing mobility with increasing diameter. Several aerosol spectrometers,

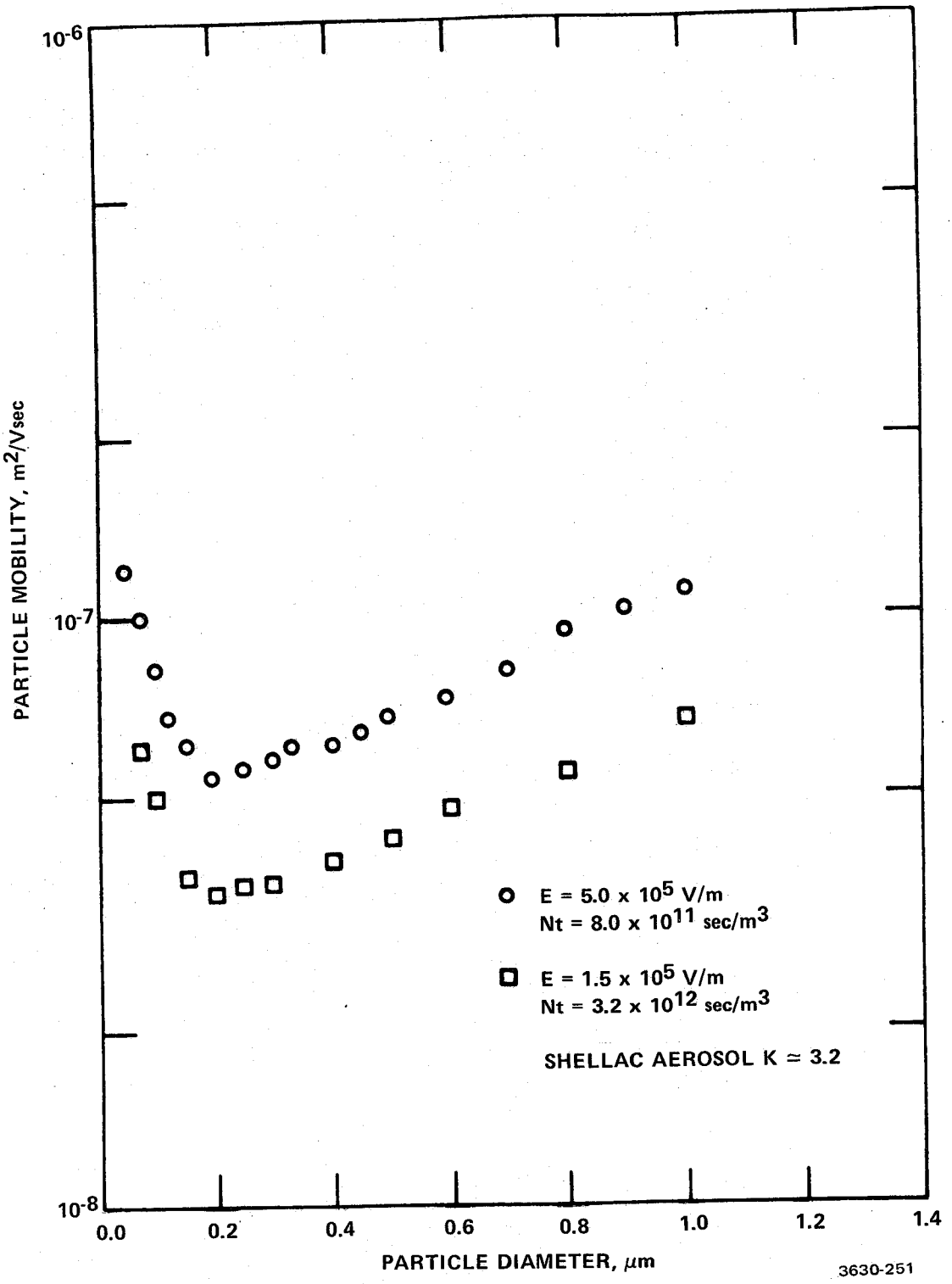

Figure 49. Particle mobility as a function of diameter for shellac aerosol particles charged in a positive ion field. K is the dielectric constant of the aerosol particles. After Cochet and Trillat.[155]

or mobility analyzers, have been demonstrated that employ the diameter-mobility relationship to classify particles according to their size[151,152,153,154] Figure 50 illustrates the principle on which these devices operate. Particles are charged under conditions of homogeneous electric field and ion concentration, and then passed into the spectrometer. Clean air flows down the length of the device and a transverse electric field is applied. From a knowledge of the system geometry and operating conditions, the mobility is derived for any position of deposition on the grounded electrode. The particle diameter is then readily calculated from a knowledge of the electric charge and mobility.

Difficulties with mobility analyzers are associated primarily with charging the particles (with a minimum of loss) to a known value by precipitation and obtaining accurate analyses of the quantity of particles in each size range. The latter may be done gravimetrically,[151] optically,[152] or electrically.[153]

The concept described above has been used by Whitby, Liu, et al.,[156,157] at the University of Minnesota, to develop a series of Electrical Aerosol Analyzers (EAA). A commercial version of the U. of Minnesota devices is now marketed by TSI, Incorporated as the Model 3030 (Figure 51). The EAA is designed to measure the size distribution of particles in the range from 0.0032 to 1.0 μm diameter. Since the concentration range for best operation is 1 to 1000 $\mu g/m^3$, dilution is required for most industrial gas aerosols.

The EAA is operated in the following manner. As a vacuum pump draws the aerosol through the analyzer (see Figure 51), a corona generated at a high voltage wire within the charging section gives the sample a positive electrical charge. The charged aerosol flows from the charger to the analyzer section as an annular cylinder of aerosol surrounding a cone of clean air. A metal rod, to which a variable, negative voltage can be applied,

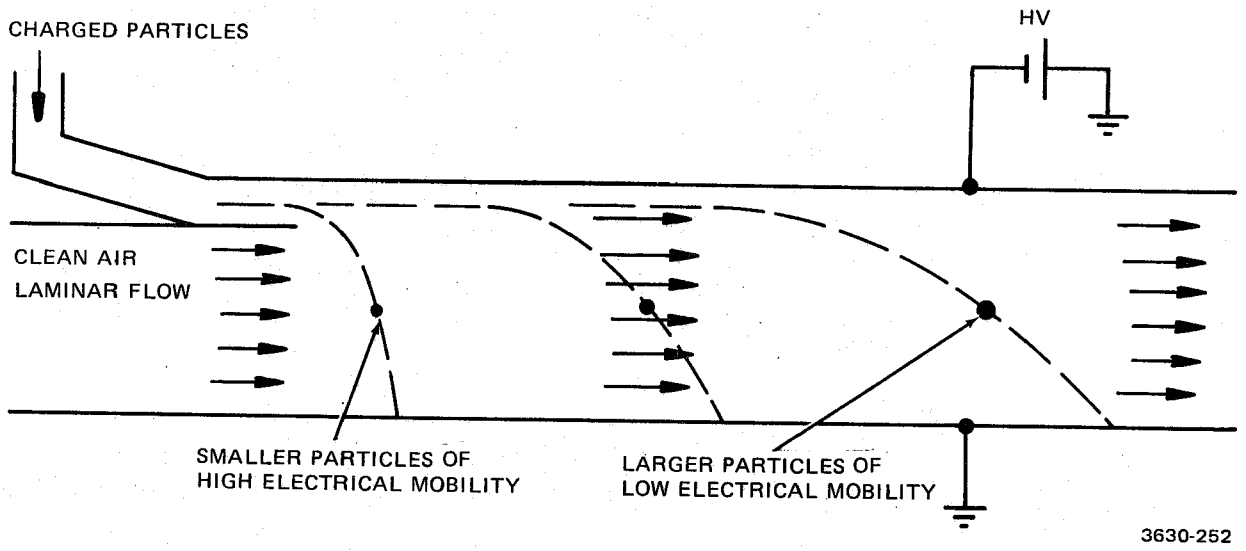

Figure 50. The electric mobility principle.

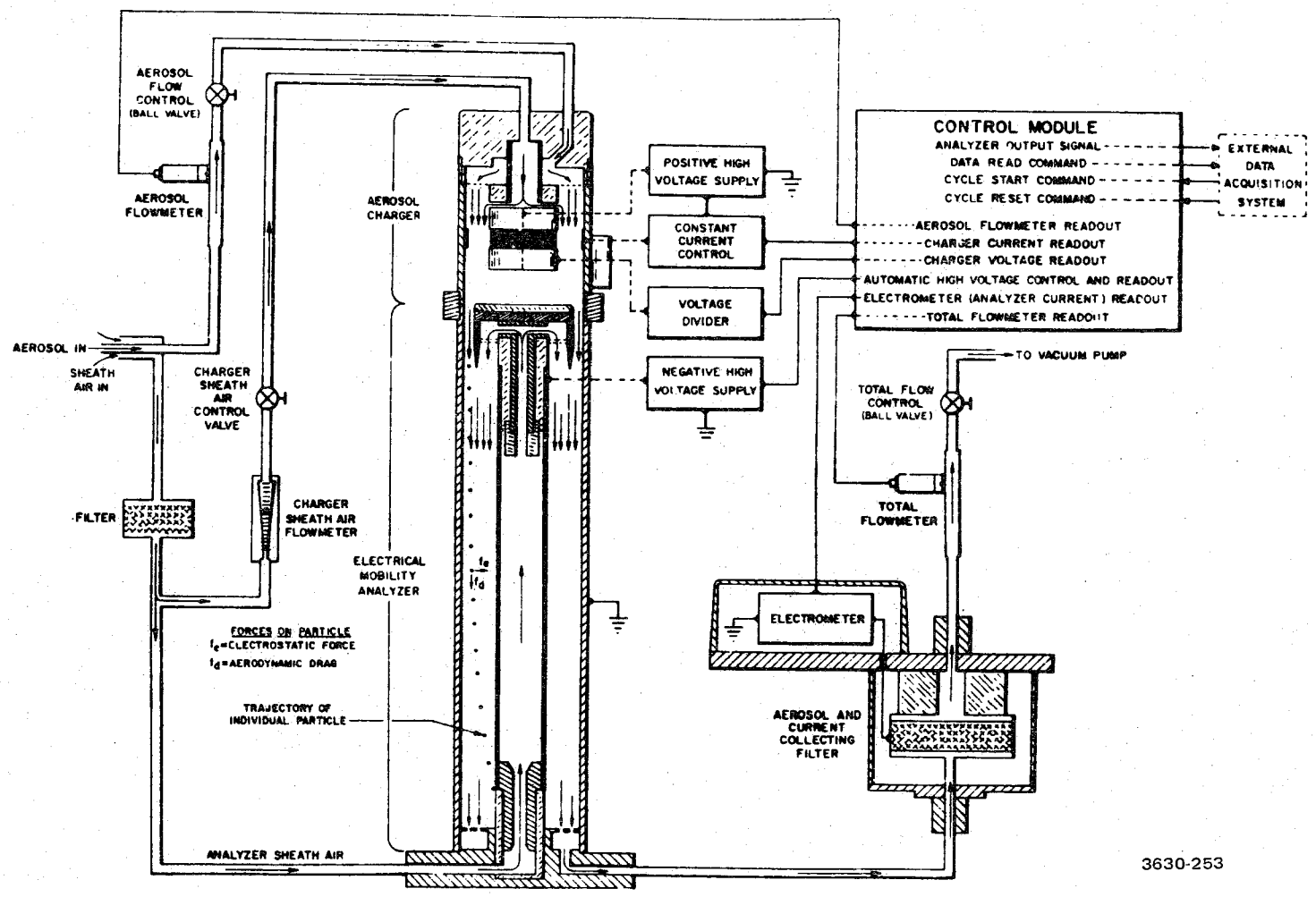

Figure 51. Schematic of the Thermosystems Model 3030 Electrical Aerosol Analyzer. After Sem.158

passes axially through the center of the analyzer tube. Particles smaller than a certain size (with highest electrical mobility) are drawn to the collecting rod when the voltage corresponding to that size is on the rod. Larger particles pass through the analyzer tube and are collected by a filter. The electrical charges on these particles drain off through an electrometer, giving a measure of current.

A step increase in rod voltage will cause particles of a larger size to be collected by the rod with a resulting decrease in electrometer current. This decrease in current is related to the additional number of particles being collected. A total of eleven voltage steps divide the 0.0032 to 1.0 micron size range of the instrument into ten equal logarithmic size intervals. Different size intervals can be programmed by means of an optional plug-in memory card.

The electrical aerosol analyzer can be operated either automatically or manually. In the automatic mode, the analyzer steps through the entire size range. For size and concentration monitoring over an extended period of time, the analyzer may be intermittently triggered by an external timer. The standard readout consists of a digital display within the control circuit module, although a chart recorder output is available. It is almost always advantageous to use a strip chart recorder to record the data. This allows the operator to identify a stable reading that may be superimposed on source variations and also gives a permanent record of the raw data.[158] The EAA requires only two minutes to perform a complete size distribution analysis, which generally makes it advantageous to use, especially on stable sources.

When the EAA is applied to fluctuating sources a peculiar problem arises. The instrument reading is cumulative, and it is impossible to tell whether variations in the reading reflect changes in the distribution or concentration of particles; hence, recordings that show rapid fluctuations in amplitude must be interpreted with great care. The lack of sensitivity can also be a problem at extremely clean sources.

Laboratory Measurements

Measurements of the size distribution of particles that have been collected in the field and transported to a laboratory must be interpreted with great caution, if not skepticism. It is difficult to collect representative samples in the first place, and it is almost impossible to reconstruct the original size distribution under laboratory conditions. For example, one cannot distinguish from laboratory measurements, whether or not some of the particles existed in the process gas stream as agglomerates of smaller particles. In spite of the limitations inherent in laboratory methods, they must be used in some instances to determine particle size and to segregate particles for analysis of their composition or other properties of interest. This section contains a discussion of some of the "standard" techniques used for particle size analysis of dust samples.

Sedimentation and Elutriation--

Elutriators and sedimentation devices separate particles that are dispersed in a fluid according to their settling velocities due to the acceleration of the earth's gravity. The settling, or terminal, velocity of a particle in air is

$$v = \frac{g\rho CD^2}{18\mu}, \qquad (9)$$

where

ρ = the particle density,

C = the slip correction factor,

μ = the viscosity of air,

D = the particle Stokes diameter, and

g = the gravitational acceleration.

Large particles in a quiescent aerosol will settle to the bottom region of the chamber more quickly than smaller particles that have smaller settling velocities. This principle is used in gravitational sedimentation and elutriation to obtain particle size distributions of polydisperse aerosols. In elutriation, the air is made to flow upward so that particles with settling velocities equal to or less than the air velocity will have a net velocity upward and particles which have settling velocities greater than the air velocity will move downward.

There are a number of commercial devices and methods having varying requirements of dust amounts and giving different ranges of size distributions, with a minimum size usually no smaller than two micrometers.[159,160] An important disadvantage is the inability of most sedimentation and elutriation devices to give good size resolution. Another disadvantage is the length of time (sometimes several hours) required to use some of the methods.

Popular methods of sedimentation sizing employ a pan balance, which weighs the amount of sediment falling on it from a suspension, and the pipette, which collects the particles in a small pipette at the base of a large chamber. Cahn's electronic microbalance, (Cahn Instrument Company, 7500 Jefferson St., Paramount, CA 90723), has an attachment that permits it to function as a settling chamber. Perhaps the most popular elutriator is the Roller particle size analyzer illustrated in Figure 52 (the Roller particle size analyzer is available from the American Standard Instrument Co., Inc., Silver Spring, MD).

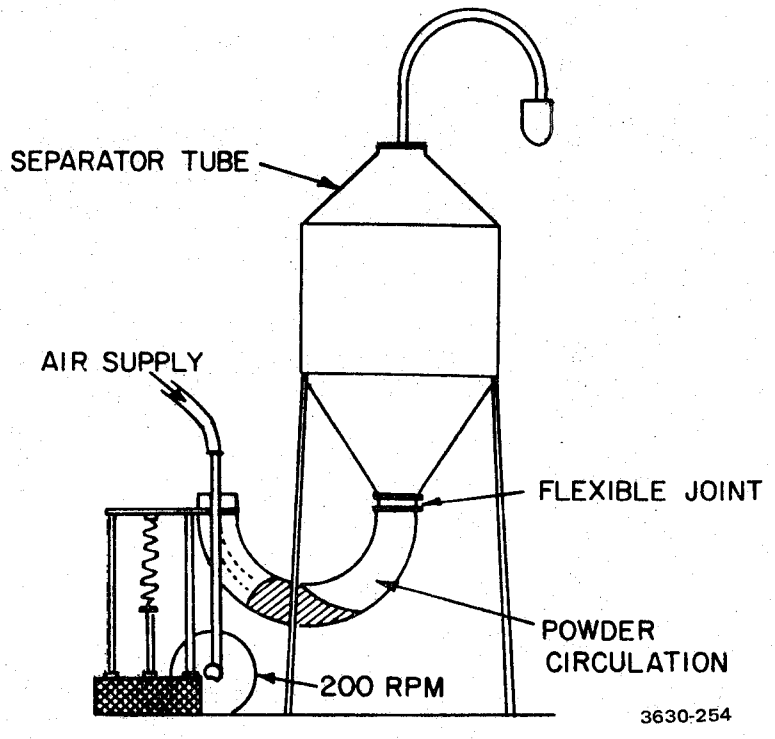

Figure 52. The Roller elutriator. After Allen.[160]

An instrument that measures the size distribution of particles in a liquid suspension is the Xray Sedigraph, (Micromeritics Instrument Corporation, 800 Goshen Springs Road, Norcross, GA 30071). The sample is continually stirred until the sampling period starts. The concentration of the particles is monitored by means of the extinction of a collimated x-ray beam. Upon sampling, the x-ray beam is moved upward mechanically to shorten the sampling time that is required. The particle-size distribution is plotted automatically. The reported range of sensitivity of the X-ray Sedigraph is from 0.1 to 100 μm.

Centrifuges--

Aerosol centrifuges provide a laboratory method of size-classifying particles according to their aerodynamic diameters. The advantage over elutriators is that the settling, or precipitation, process is speeded up by the large centrifugal acceleration and the effective sizing range of some instruments includes much smaller particles. The sample dust is introduced in the device as an aerosol and enters a chamber which contains a centrifugal force field.

In one type of aerosol centrifuge, the larger particles overcome the viscous forces of the fluid and migrate to the wall of the chamber, while the smaller particles remain suspended. After the two size fractions are separated, one of them is reintroduced into the device and is fractionated further, using a different spin speed to give a slightly different centrifugal force. This is repeated as many times as desired to give an adequate size distribution. One of the more popular lab instruments using this technique is the Bahco microparticle classifier, which is illustrated in Figure 53, and is available commercially from the Harry W. Dietert Company, Detroit 4, Michigan. The cutoff size can be varied from about two to fifty micrometers to give size distribution characterization of a 7 gm dust sample. A similar

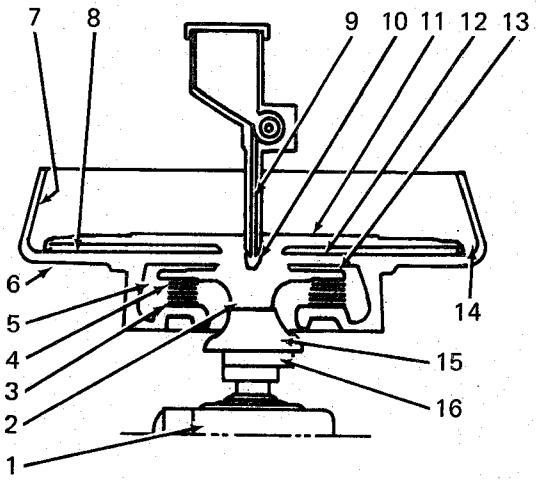

SCHEMATIC DIAGRAM

1. Electric Motor
2. Threaded Spindle
3. Symmetrical Disc
4. Sifting Chamber
5. Container
6. Housing
7. Top Edge
8. Radial Vanes
9. Feed Point
10. Feed Hole
11. Rotor
12. Rotary Duct
13. Feed Slot
14. Fan Wheel Outlet
15. Grading Member
16. Throttle

3630-255

Figure 53. The Bahco microparticle classifier.

instrument is the B.C.U.R.A. (British Coal Utilization Research Association, Leatherhead, Surrey, U.K.) centrifugal elutriator which has a range of four to twenty-six micrometers.[161]

In the second type of centrifuge, the device is run continuously, and the particle size distribution is determined from the positions where the particles are deposited. Examples are spiral centrifuges developed by Goetz, et al.,[162,163,164] (Figure 54) and by Stöber and Flachsbart,[165] (Figure 55) that can classify polydisperse dust samples with particles from a few hundredths of a micron to approximately two micron in diameter. The conifuge, first built by Sawyer and Walton[166] and modified several times since then,[167,168] is useful in the study of aerodynamic shape factor, but can also be used for the determination of size distributions especially for particles having aerodynamic diameters smaller than twenty-five micrometers (see Figure 56). In continuously operating centrifuges, the particles are generally deposited onto a foil strip, where their position yields a measure of their size, and their number is obtained by microscopy, radiation, or by weighing segments of the foil.

Microscopy--

Microscopic analysis has long been regarded as the established, fundamental technique of counting and sizing particles that the human eye cannot comfortably see. Usually, the method involves one person, a microscope, and a slide prepared with a sample of the aerosol to be measured. A random selection of the particles would then be measured and counted, with notable characteristics of color, shape, transparency, or composition duly recorded. The most difficult task, especially since the advent of sophisticated computerized equipment has made counting and sizing easier, is the preparation of a slide which contains a representative sample of the aerosol.

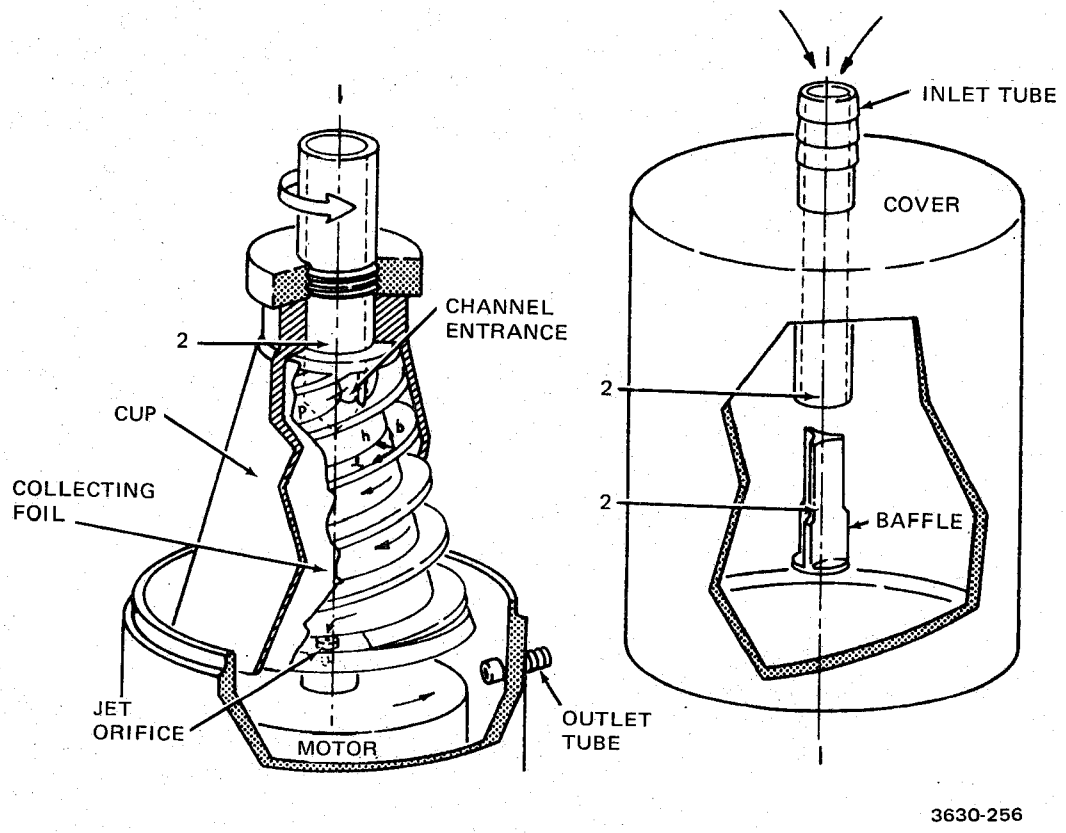

Figure 54. A cut-away sketch of the Goetz Aerosol Spectrometer spiral centrifuge. In assembled form the vertical axes (1) coincide and the horizontal arrows (2) coincide. After Gerber.[164]

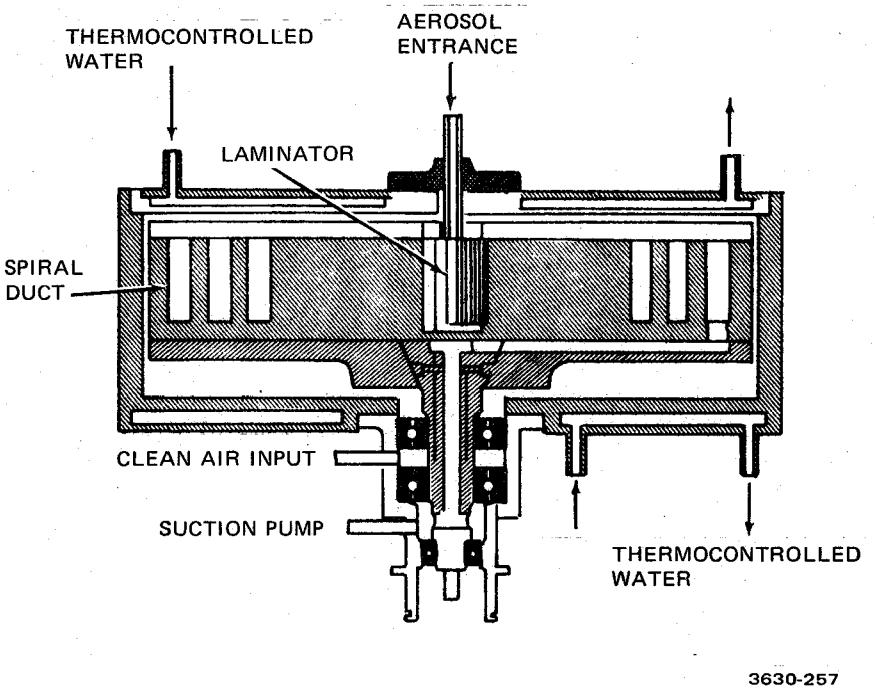

Figure 55. Cross-sectional sketch of the Stober Centrifuge. After Stober and Flachsbart.[165]

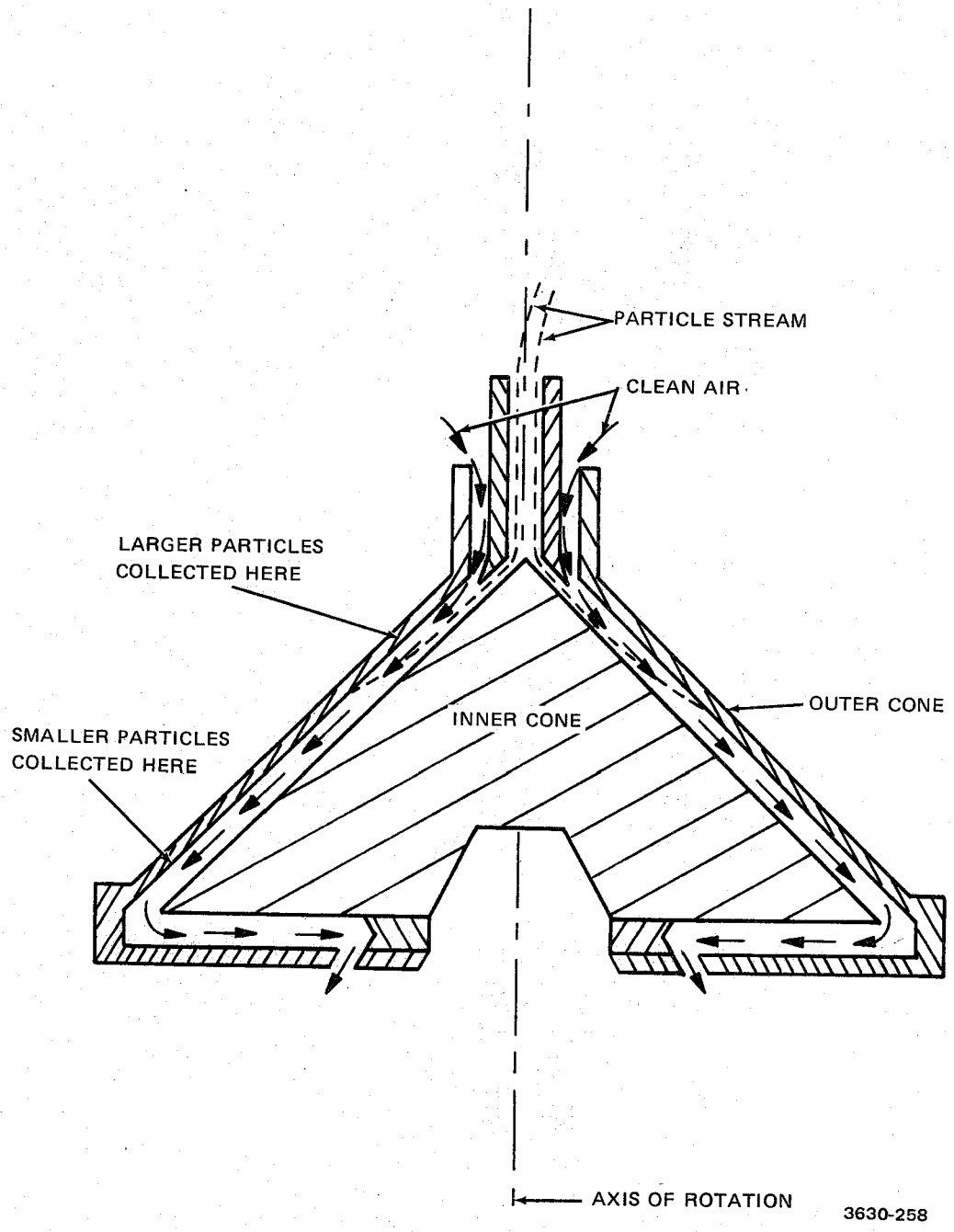

Figure 56. Cross-sectional sketch of a conifuge.

A careful technique is required to obtain a slide sample which isn't biased toward large or small particles, does not contain agglomerations which weren't present in the stack, does not break up agglomerations which were present in the stack, is not too dense or too sparse, and has not been contaminated in the process of preparation. Different methods of slide preparation for optical and photographic microscopy are discussed by Cadle[159] and Allen.[160] A particularly good discussion of particle analysis through microscopy is given in Volume I of the McCrone Particle Atlas.[169] One main disadvantage of microscopic analysis is the type of diameter measured. Depending on the shape of the particles, several different types of diameter are used to characterize the size of the particle. Three commonly used types of diameter are shown in Figure 57 with their definitions. However, for most control and standards work, the diameter of interest is the aerodynamic diameter, which is based on the particle's behavior in air. In these cases, the data from microscopic analysis is helpful only insofar as it can be related to the particular need of the experimenter.

Particle sizes which can be easily studied on optical microscopes range from about .2 to 100 micrometers. Electron microscopes have decreased the smallest diameter of particles capable of being analyzed by microscopy down to 0.001 micrometer. Both scanning and transmission electron microscopes provide much information on surface features, agglomeration, size, composition and shape of particles in size ranges below that of optical microscopes. Computerized scanning devices have increased the analyzing ability of present day microscopes and simplified counting and sizing.

Several commercial laboratories are equipped to provide physical and structural characterizations of dust samples quickly and fairly inexpensively.

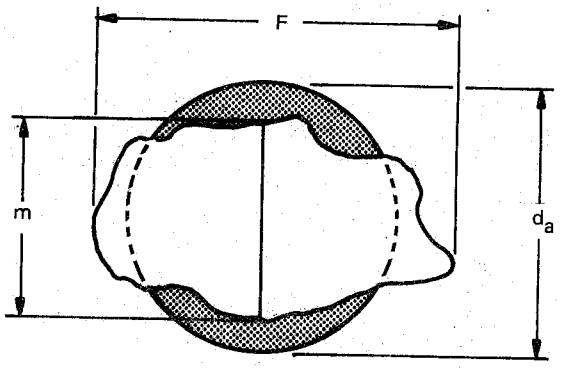

F - Feret's diameter, the distance between two tangents on opposite sides of the particle, parallel to a fixed direction.

M - Martin's diameter, the length of the line which bisects the image of the particle, parallel to a fixed direction.

d_a - Diameter of a circle having the same projected area as the particle in the plane of the surface on which it rests.

3630-259

Figure 57. Three diameters used to estimate particle size in microscopic analysis.

Sieves--

Because of its relatively large lower particle size limit (50-75 micrometers), sieving has a limited use for characterzing most industrial sources today. However, for particles within its workable size range, sieving can be a very accurate technique, yielding adequate amounts of particles in each size range for thorough chemical analysis.

Sieving, one of the oldest ways of sizing particles geometrically, is the process by which a polydisperse powder is passed through a series of screens with progressively smaller openings until it is classified as desired. The lower size limit is set by the size of the openings of the smallest available screen, usually a woven wire cloth. Recently, micro etched screens have become available. In the future, the lower size limit may be lowered by using membrane filters which can be made with smaller holes than woven fine wire cloth.

Sieves are available from several manufacturers in four standard size series: Tyler, U.S., British, and German. See Table XVI for a comparison of these series. Tyler screens are manufactured by the W.S. Tyler Co., Cleveland, Ohio.

Other methods of size classification using sieving principles are currently being studied and improved. Wet sieving is useful for material originally suspended in a liquid or which forms aggregates when dry-sieved. Air-jet sieving, where the particles are "shaken" by a jet of air directed upward through a portion of the sieve, has been found to be quicker and more reproducible than hand or machine sieving, although smaller amounts of powder (5 to 10 g) are generally used. Felvation[170] (using sieves in conjunction with elutriation) and "sonic sifting"[171] (oscillation of the air column in which the particles are suspended in a set of sieves) are similar techniques that employ this principle.

TABLE XVI

COMPARISON TABLE OF COMMON SIEVE SERIES

Tyler[a]		U.S.[b]		British Standard[c]		German DIN[d]		
Equiv. Mesh	Openings in mm.	Mesh No.	Openings in mm.	Mesh No.	Openings in mm.	DIN No.	Mesh per sq. cm.	Openings in mm.
3.5	5.613	3.5	5.66			1	1	6.000
4	4.699	4	4.76					
5	3.962	5	4.00					
6	3.327	6	3.36	5	3.353	2	4	3.000
7	2.794	7	2.83	6	2.812			
8	2.362	8	2.38	7	2.411	2.5	6.25	2.400
9	1.981	10	2.00	8	2.057	3	9	2.000
10	1.651	12	1.68	10	1.676	4	16	1.500
12	1.397	14	1.41	12	1.405			
14	1.168	16	1.19	14	1.204	5	25	1.200
16	0.991	18	1.00	16	1.003	6	36	1.020
20	0.833	20	0.84	18	0.853			
						8	64	0.750
24	0.701	25	0.71	22	0.699			
28	0.589	30	0.59	25	0.599	10	100	0.600
						11	121	0.540
32	0.495	35	0.50	30	0.500	12	144	0.490
35	0.417	40	0.42	36	0.422	14	196	0.430
42	0.351	45	0.35	44	0.353	16	256	0.385
48	0.295	50	0.297	52	0.295	20	400	0.300
60	0.208	60	0.250	60	0.251	24	576	0.250
65	0.208	70	0.210	72	0.211	30	900	0.200
80	0.175	80	0.177	85	0.178			
100	0.147	100	0.149	100	0.152	40	1600	0.150
115	0.124	120	0.125	120	0.124	50	2500	0.120
150	0.104	140	0.105	150	0.104	60	3600	0.102
170	0.088	170	0.088	170	0.089	70	4900	0.088
200	0.074	299	0.974	200	0.076	80	6400	0.075
250	0.061	230	0.062	240	0.066	100	10000	0.060
270	0.053	270	0.053	300	0.053			
325	0.043	325	0.044					
400	0.038	400	0.037					

[a] Tyler Standard Screen Scale Series.

[b] U.S. Sieve Series (Fine Series), National Bureau of Standards LC-584 and ASTM E-11.

[c] British Standard Sieve Series, British Standards Institution, London BS-410:1943.

[d] German Standard Sieve Series, German Standard Specification DIN 1171.

Coulter Counter--

Figure 58 illustrates the principle by which Coulter counters (Coulter Electronics, Inc., 590 West 20th Street, Hialeah, FL 33010) operate. Particles suspended in an electrolyte are forced through a small aperture in which an electric current has been established. The particles passing through the aperture displace the electrolyte, and if the conductivity of the particle is different from that of the electrolyte, an electrical pulse of amplitude proportional to the particle-electrolyte interface volume will be seen. A special pulse height analyzer is provided to convert the electronic data into a size distribution. A bibliography of publications related to the operation of the Coulter counter has been compiled by the manufacturer and is available on request.

The requirement that the sample be suspended in an electrolyte may limit the application of the Coulter counter to very inert particles, and those for which the response to a particular electrolyte-particle suspension can be determined by calibration.

NEW TECHNIQUES

Several techniques are under development that may significantly improve the technology of particulate sampling. Some of the more promising methods are discussed briefly in this section. It should be noted that most of these now require special skills or knowledge in their application, and for many systems, only one prototype has been fabricated.

Low Pressure Impactors

It is possible to extend the sizing capability of cascade impactors to submicron particles by operating the devices at pressures of 0.01 to 0.1 atmosphere. If all operating parameters

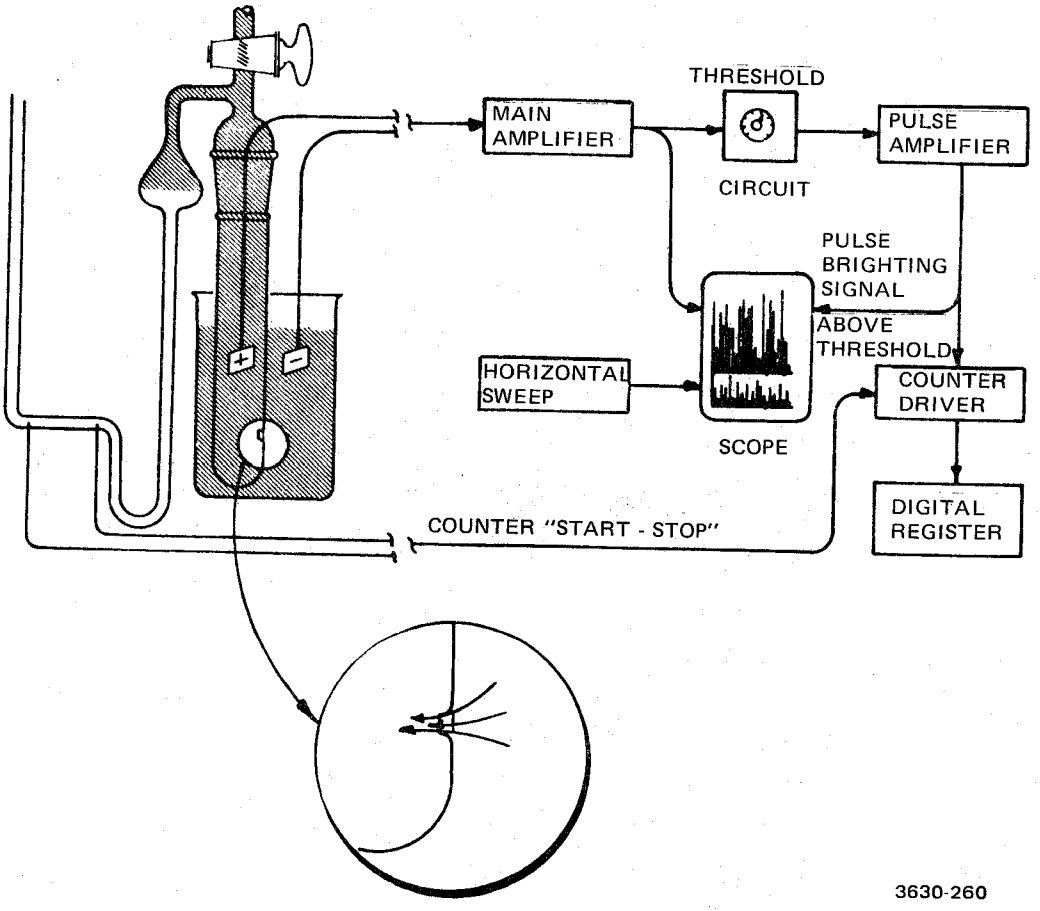

Figure 58. Operating principle of the Coulter counter. Courtesy of Coulter Electronics.

except the pressure are held constant, the cut point, or D_{50}, is inversely proportional to the square root of the slip correction factor:

$$D_{50} \alpha C^{-\frac{1}{2}} \tag{10}$$

Since C increases rapidly with decreasing pressure, cut points of 0.02 μm or less can be obtained.[172,173,174] Pilat[175,176] has developed and tested a low pressure impactor for sampling from process streams. (See Figure 59).

Figure 60 shows the sampling train used by Pilat in his experiments. Two impactors are operated in series. The first impactor is of a conventional design with cut points from about 0.3 to 20 μm diameter. The second impactor is operated at reduced pressure with cut points from about 0.03 to 0.2 μm diameter. The sampling train contains a low pressure drop condenser; a double vane, leakless, high vacuum pump; a control box with pressure gauges, thermocouple pyrometers, and valves; and a dry gas meter. A 90 mm diameter filter holder is used down stream from the second impactor. The maximum flowrate is approximately 50 liters/minute. The main problems associated with this technique are the large bulky equipment required, particle bounce, and the very low mass collected on each stage.

Impactors with Beta Radiation Attenuation Sensors

Beta attenuation has some appeal as a detection mechanism for cascade impactors in air pollution work because the impactor separates the particles according to their aerodynamic behavior, which is desirable, and the beta attenuation yields a direct measure of the amount of mass collected, which is also desirable.

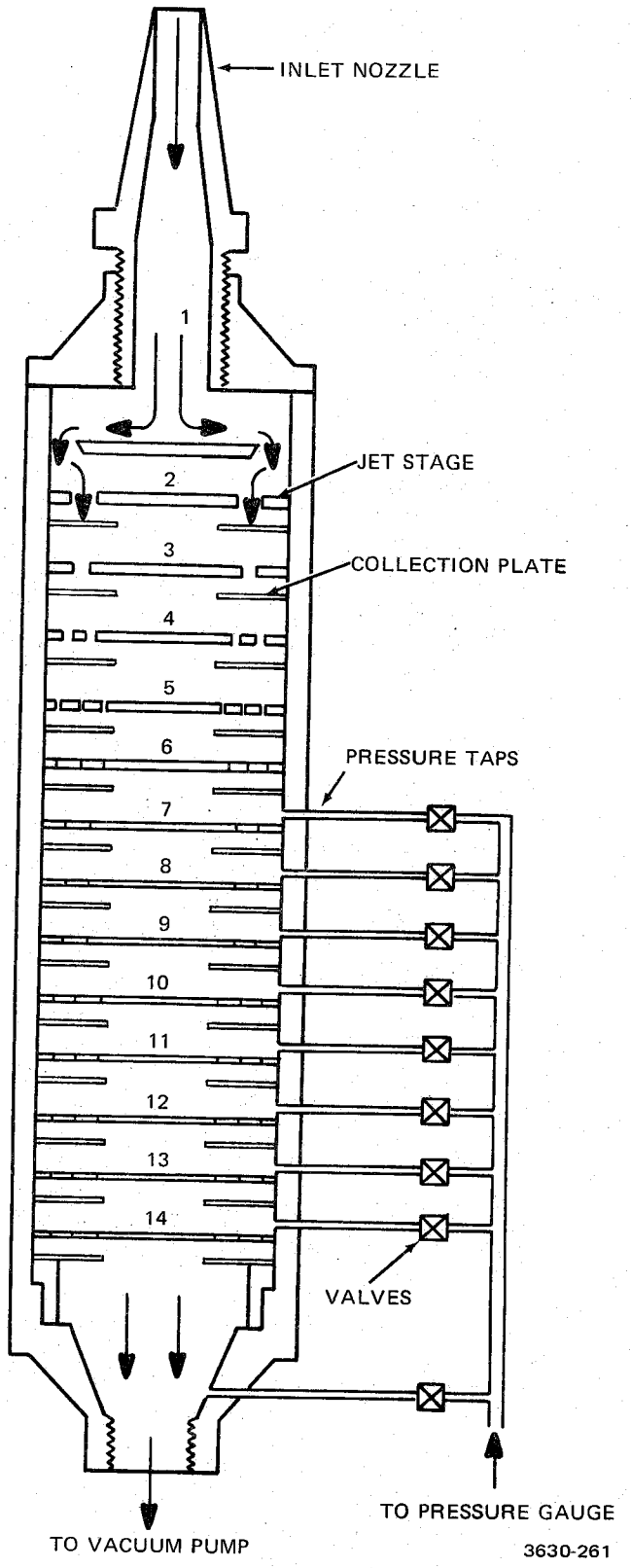

Figure 59. Cross section of prototype Mark IV University of Washington Source Test Cascade Impactor.

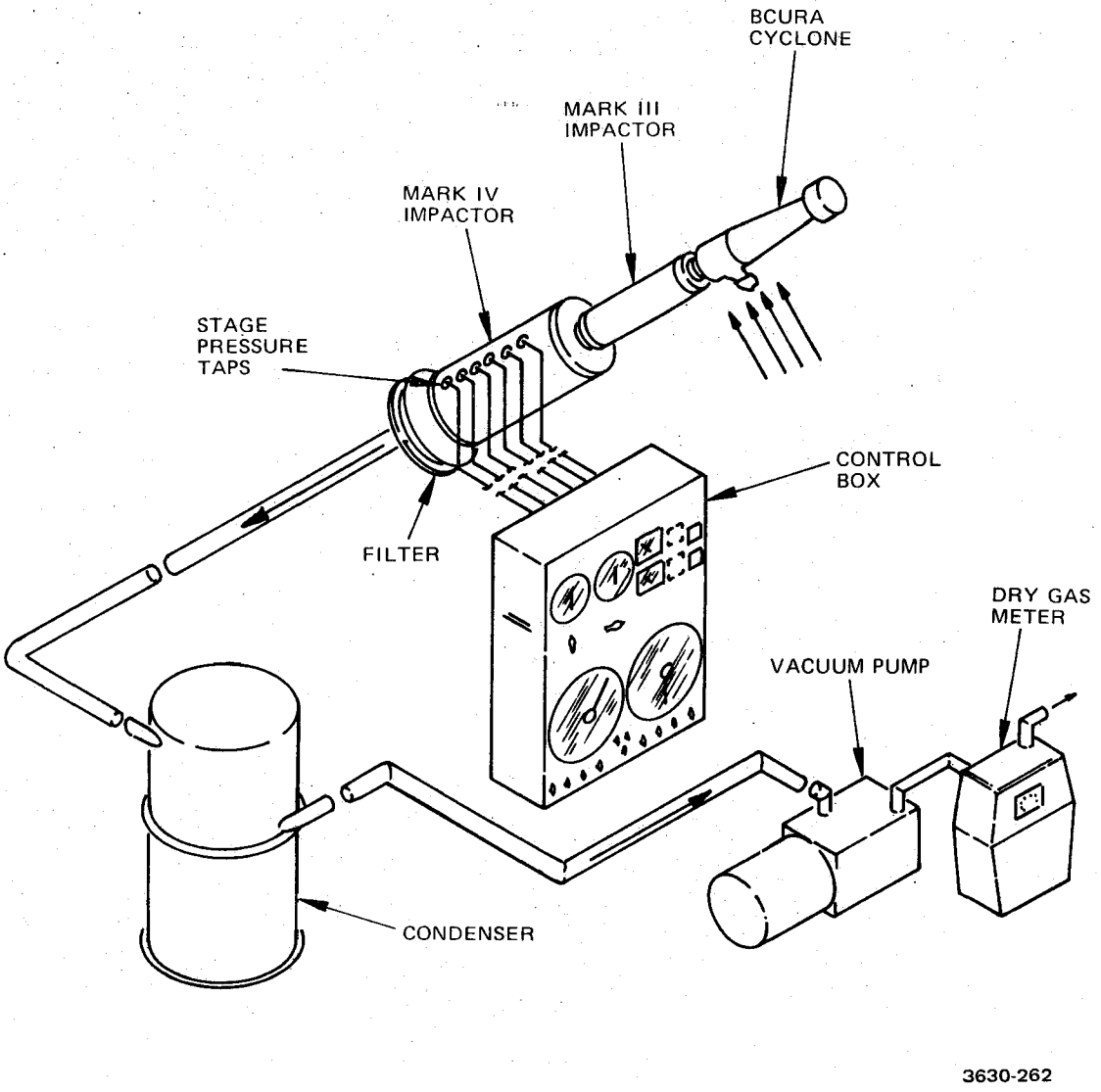

Figure 60. Sampling train utilizing a low pressure impactor. After Pilat.[176]

Figure 61 illustrates how beta particle sources and detectors can be used to monitor the deposition of dust under an impaction jet. In one instance, the tape moves continuously and two detector-source units are used to obtain a zero reading and to measure the amount of mass collected. In the second example, the tape is periodically stepped forward, and a zero reading is taken from the initially clean area under the impaction jet.

A virtual impactor with beta attenuation detectors has been developed for air pollution studies. The instrument is large, and must be operated outside of the stack. The sample is transported to the instrument through a probe. A complete analysis and evaluation of this system has not been published.[177]

An attempt was made to develop a seven-stage beta impactor for in situ operation. The device was constructed, but never operated in stack because suitable beta detectors were not available.[178]

Other problems are: selecting suitable tapes and greases for compatability with the beta monitor and for good particle retention, designing the impactor to give a uniform deposit, and the mechanical problems associated with designing such a complex system to be operated in a harsh, dirty environment.

In summary, it seems unlikely that multiple stage impactors with beta attenuation as a detection mechanism can be made practical for in situ use in the foreseeable future.

Cascade Impactors with Piezoelectric Crystal Sensors

Carpenter and Brenchly[179] and Chuan[180] have developed and tested multiple-stage cascade impactors with piezoelectric crystals on each stage to monitor the rate and amount of mass collected. Chuan's impactor is now sold commercially by Berkeley Controls, Inc (2700 Du Pont Drive, Irvine, CA 92714).

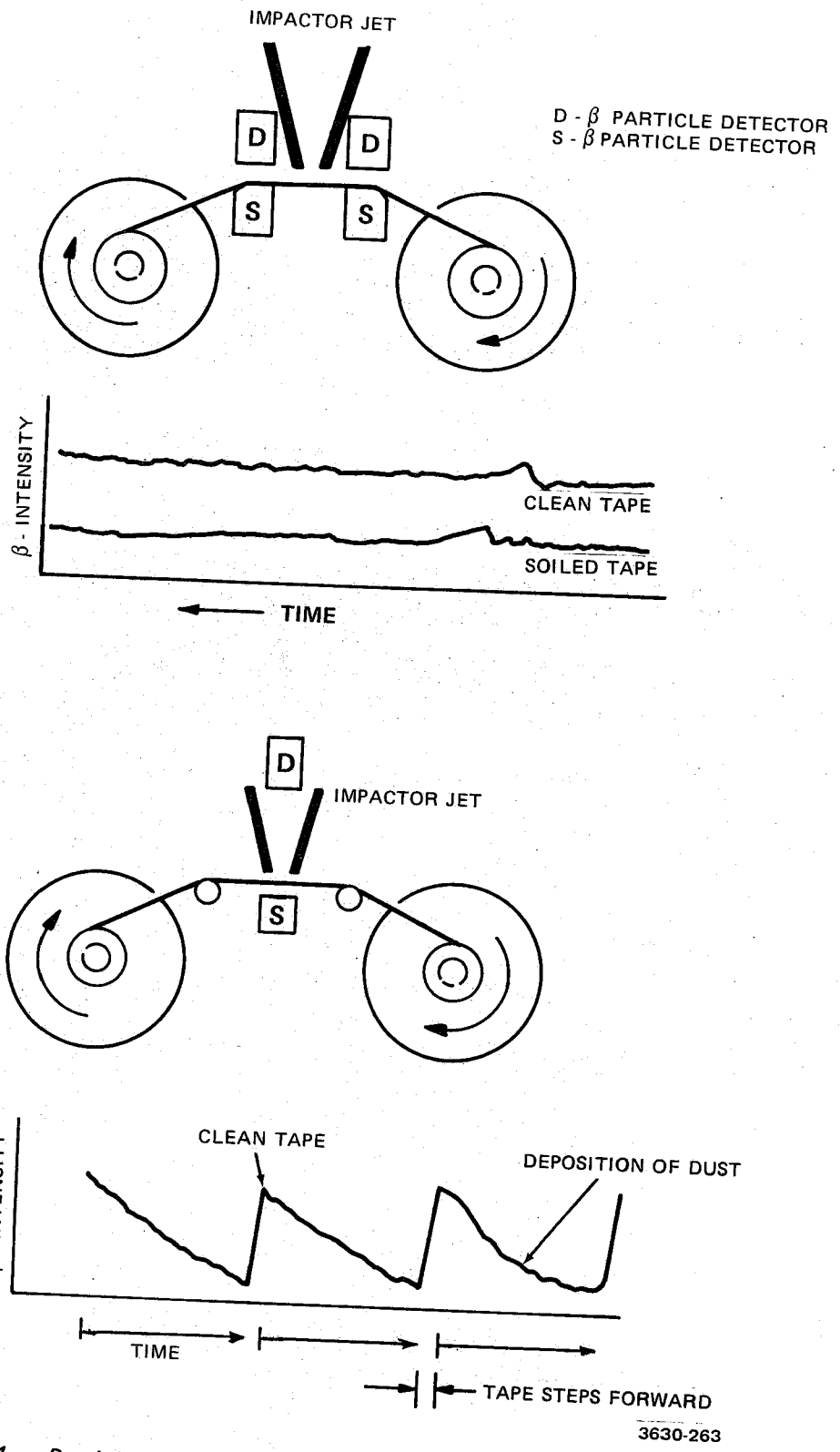

Figure 61. *Particle deposition and β-attenuation with a. a continuously moving tape, and b. a stationary tape that is stepped forward periodically.*

Chuan's impactor has ten stages, with the cut points reported to be from 0.05 to about 25 μm. Because of the extreme sensitivity of the instrument (and upper limit on mass accumulation), it is more suitable for ambient than stack work, where sample extraction and dilution would be required. The impactor must be disassembled, and each crystal cleaned before the limits of the linear range are reached. In a typical urban atmosphere, this limit is reached in about 2 hours.[57]

The best application of piezoelectric impactors would seem to be monitoring real time flucturations in fairly dilute aerosols. (See also Piezoelectric Mass Monitors in Section 2.)

Virtual Impactors

Figure 62 illustrates the operating principle of virtual impactors, sometimes called centripeters, dichotomous samplers, or stagnation impactors. The aerosol jet is directed toward a stagnant zone, or an opposing jet of clean gas, and a "virtual" surface is formed at the boundary between the aerosol jet and air space or opposing jet. The jet streamlines are diverted as in a normal impactor. Particles of larger Stokes number impinge on (and pass through) the virtual surface, while those having smaller Stokes numbers follow the streamlines. The principal advantage over conventional impactors is that both aerosol fractions can be preserved, one containing the larger particles and another containing the smaller particles. Also, uniform deposition of the sized particles on filters is possible with virtual impactors, whereas conventional impactors yield conical deposits underneath the jets.

Several multiple-stage, virtual impactors have been developed, all for the purpose of obtaining large quantities of sized particles, in uniform deposits, for subsequent analysis. Hounam and Sherwood originated the concept of the virtual impactor, and

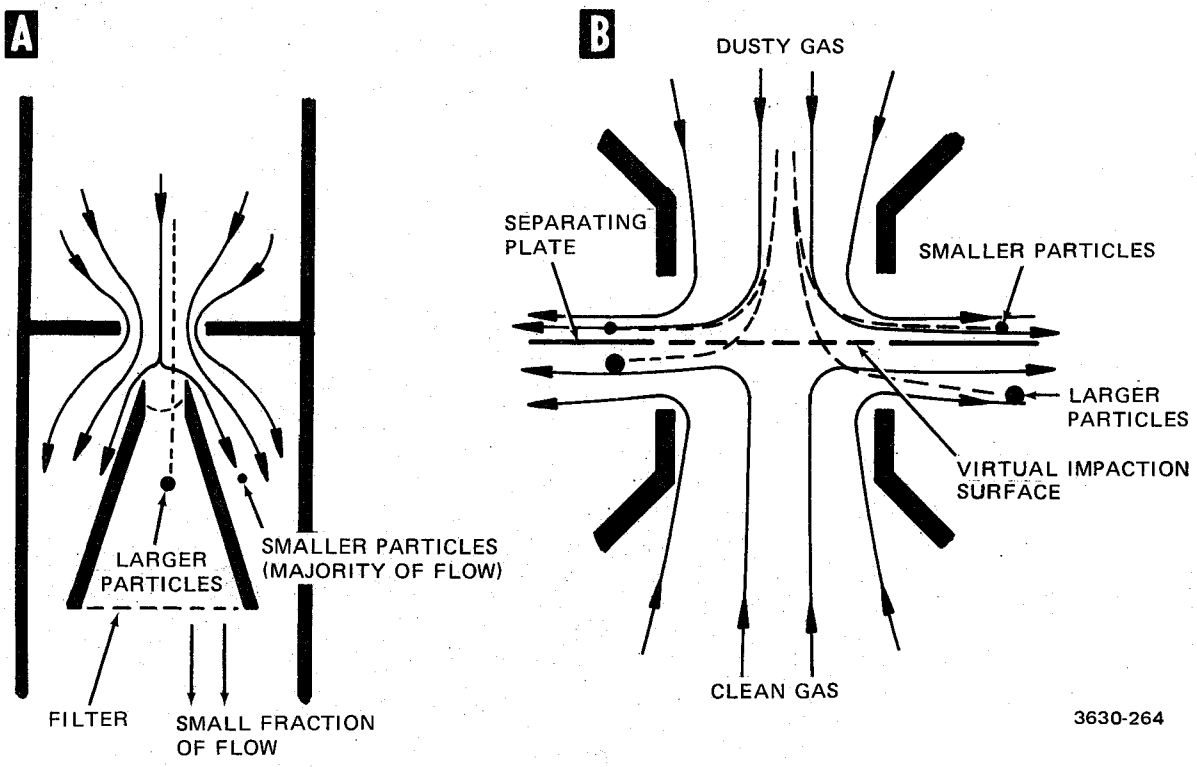

Figure 62. Virtual impactors (centripeters, dichotomus samplers, stagnation impactors) a. impingement into a stagnant air space; b. opposed axisymmetric jets.

developed a four stage (three jet stages and a backup filter) device for sampling radioactive aerosols.[181] In laboratory calibration studies with their impactor, Hounam and Sherwood found that a substantial fraction of the sample aerosol was not collected on the filters, but rather on the walls of the instrument. A commercial version of the Hounam and Sherwood virtual impactor is available from BGI, Inc., 58 Guinan St., Waltham, MA 02154.

Conner,[182] almost simultaneously with Hounam and Sherwood, developed a two-stage virtual impactor (one jet stage and a backup filter) for collecting large samples of particles, one above and one below one micron in diameter. Connor demonstrated that the sharpness of cut for the virtual impactor was comparable with that of conventional impactors, and also that there is a definite requirement for a controlled flow of air into the collection nozzle (through the filter) in order to establish optimum performance.

Peterson[183] and Loo , et al.,[184] have developed virtual impactors for sampling urban aerosols, and the Peterson version is now sold by Sierra Instruments Co. (P.O. Box 909, Village Sq., Carmel Valley, CA 93924).

Schott and Ranz[185] have developed and tested, in the laboratory, a "jet cone" impactor that is a hybrid design wherein the aerosol jet is directed toward a conical surface. Any reentrained particles are carried into a secondary collection zone by a portion of the flow, as in virtual impactors. This concept would seem to have the advantages of a virtual impactor, without the disadvantage of an ill defined (virtual) impaction surface.

Research on the opposed-jet concept has been done by Luna,[186] who originated the idea, Brooks,[187] and Willeke.[188] These instruments appear to be quite sensitive to the geometry and alignment of various components, and further research is needed to fully evaluate their potential as useful tools in pollution analysis and research.

Virtual impactors have played a minor role in pollution studies to date, with very little, if any, application to process streams. The major advantage of these devices appears to be the capability of using them to obtain uniformly deposited films of dust for analysis by X-ray fluorescence, or any other technique that requires similar sample preparation, and apparently less particle reentrainment.

Optical Measurement Techniques

When light is incident upon a particle, some of the radiation will be absorbed, some scattered, and some polarization will occur. The exact nature and magnitude of the interaction depends on the ratio of the particle diameter to the wavelength of the radiation, and the shape and composition of the particle. Thus, measurements can be envisioned that would yield information of particle size, shape, concentration, and composition. It appears, from the information now available, that optical methods offer the greatest hope for a major advance in the technology of particulate sampling. Any successful instrument, however, must be able to function in a harsh environment where extremes in temperature, particle concentration, corrosion, etc. are found. Also, the parameter that is measured should ideally be related to the aerodynamic diameter of the particles.

Although there are no proven commercial instruments available for measuring particle size distributions in process streams, a variety of methods have been proposed, and several prototype instruments developed. This section contains brief descriptions of some of the promising methods.

Hodkinson[189] suggested a method of minimizing the dependence on particle refractive index in sizing measurements from a study of the Fraunhofer diffraction formulation at small angles of

forward scattering. The basis of this method involves measurement of the intensity of light scattered by a single particle at two small angles, and calculation of the ratio of the two intensities.

Figure 63 shows the scattered light intensity versus scattering angle for two spherical particles of equal diameter. One particle is a glassy, nonabsorbing sphere with refractive index equal to 1.55. The other is absorbing, such as carbon, and has a refractive index of 1.96-0.66i. For small angles, the intensity of the scattered radiation is approximately the same for both spheres, although at large angles there is a difference of orders of magnitude.

Shofner et al.,[190] Gravatt,[191] and Chan[192] have developed prototype systems for particle sizing that are based on the intensity ratio concept of Hodkinson. Shofner's system, the "PILLS-IV", is designed for in situ operation. The intensities of the scattered light pulses at the angles θ_1 and θ_2 are normalized to the reference pulse at $\theta=0°$ for synchronization and to compensate for fluctuations in intensity of the laser source. The optics and sensors are kept clean and cool by the use of a purge air system.

The laser used in the PILLS-IV system is a semiconductor junction diode (λ = 0.9 μm). The useful size range for particle sizing is from 0.2 to 3.0 μm diameter. Shofner states that the view volume of his system is approximately $2x10^{-7}$ cm^3. The upper concentration limit for single particle counters is determined by the requirement that the probability of more than one particle appearing in the view volume at a given time be much less than unity. For Shofner's system this would set the concentration limit at approximately 10^6 particles/cm^3, a value much higher than for conventional single particle counters.

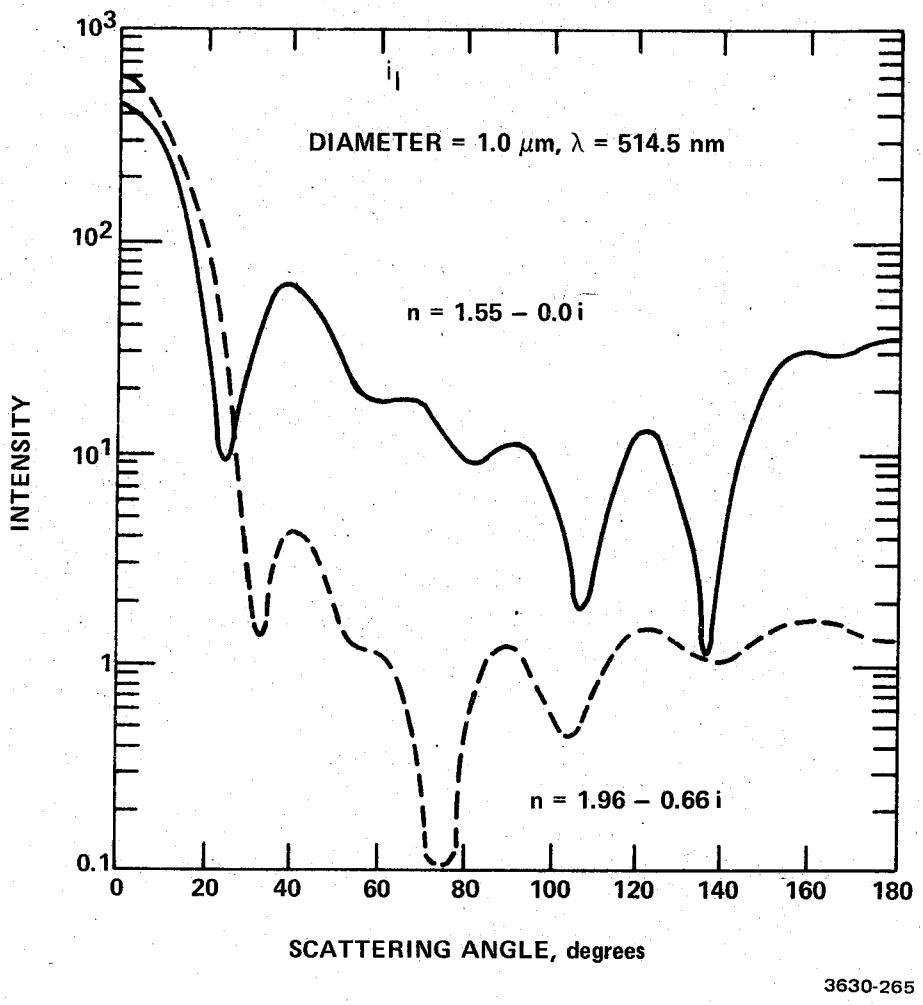

Figure 63. Scattered light intensity versus scattering angle for two spherical particles of equal diameter. The solid curve is for a glassy, non-absorbing sphere and the dashed curve is for an absorbing sphere. After Gravatt.[191]

Gooding[134] has tested the PILLS-IV prototype system simultaneously with several inertial sizing devices to measure particle sizes. The PILLS-IV data did not agree well with impactor data for this source, and further calibration may be required.

An optical particle sizing device developed by R.G. Knollenberg[193] for atmospheric application may be adaptable to industrial emission measurements. The device is, in some respects, similar to a conventional, near forward scattering, single particle counter, except that the sensing zone is contained within an open cavity laser. This configuration yields very high illumination levels, permitting the detection of particles smaller than those sized by most light-scattering instruments. The method also has potential for the measurement of particle velocities (across the beam) through an optical heterodyne effect. The particle imaging and detection system of the device permits the rejection of signals from particles outside the nominal view volume so that the sample gas stream flows in a fairly unrestricted manner through the relatively large open cavity. However, substantial modifications in terms of cooling and purge air for the optical components would be required before the device could be used in-stack.

Systems employing optical fourier transforms to obtain particle-size distributions in the 5-100 μm diameter range have been described by Cornillaut[194] and McSweeny.[195] In this technique a moderately large diameter, collimated beam of spatially filtered, coherent light is used to produce a diffraction pattern from all particles in a known volume of space. The diffraction pattern is imaged on a detector array having circular symmetry, permitting a determination of the radial distribution of the intensity of light in the superposed diffraction patterns of the randomly distributed particles in the view volume. A numerical inversion process, which can be adequately achieved by matrix multiplication of the intensity data by an inversion matrix, provides the required size distribution. The inversion process

can be carried out in real time using a mini-computer. With the proper selection of measurement points in the diffraction pattern the size interval covered by the technique can be extended outside the previously mentioned 5-100 μm range.

Wertheimer and Wilcock[196] developed an approximate technique based upon diffraction theory to determine the average size of a distribution of particles (large particles, where $\alpha>20$). The technique utilizes three rotating masks of different shapes to spatially filter the detected signal. With the r^2 mask, the detected signal from light scattered by a single particle is proportional to the second power of the particle radius. Similarly, with the r^3 (r^4) mask, the detected signal is proportional to the third (fourth) power of the particle radius. For many particles in the field of view of the detector, the three detected signals are proportional to the second, third, and fourth moments of the distribution. These signals yield the volume mean radius, the area mean radius, and the standard deviation of the area distribution. Wertheimer and Wilcox demonstrated the usefulness of this technique using particles from 4 to 83 μm in diameter. Consideration of the principles on which this method is based suggests that it is resistive to refractive index to the same degree as forward scattering particle counter. The method has been incorporated into a commercial instrument that is sold by Leeds and Northrup Co. (Dickerson Road, North Wales, PA).

Imaging systems, either of a direct type or of a type using reconstructed images from holograms, have not been widely used for size distribution analysis in flue gases, but have been used routinely for work with liquid aerosols-particularly to size aerosols produced by various types of spray nozzles. In both direct imaging systems and holographic systems, a short light pulse of high intensity is used to illuminate the particles. The pulse durations from available illuminators are short enough to effectively eliminate blur due to particle motion for velocities up to 300 m/sec.

Flash Television Particle counters providing real time size distributions have been described by Hotham[197] using pulsed ultraviolet laser illumination, and by Simmons and Dominic[198] using xenon flash tubes for illuminators. The reported range for size distribution determinations for the latter device is 0.3 to 10,000 μm. In Hotham's system, the image size analysis can be performed instantaneously on a basis of image height, length, perimeter or projected area. Dynamic processes and particle motion can be observed and studied by use of a video tape recorder. The view volume in systems of this type is defined electronically in width and height to exclude particles which are only partially within the field of view while focus detection circuits are used to define the depth of the view volume and exclude out-of-focus particles. Because of cost and the practical difficulties involved in the use of such a system in a flue gas environment, applications of these systems will probably be limited to special research service.

Holography as a technique for investigating aerosols has several advantages over most of the methods previously described. The aerosol is not disturbed by the measurement process, a large depth of field is possible and, as in the flash T.V. method, the particles can be effectively "stopped" for examination at speeds up to a few hundred meters per second. Typical system resolution limits, however, result in a lower limit in sensitivity for particle sizing of about 5 μm. By double-pulsing the laser illuminator one can obtain holograms which permit the determination of particle velocities in three dimensions. Matthews and Kemp[199] have described the use of a two-beam holographic system for determining the spatial distribution of limestone particulate injected into an operating 140 MW 24-foot-wide pulverized coal fired steam boiler. The systems described by both Matthews and Kemp, and Allen, et al., utilize low angle forward scattered light from a pulsed ruby laser. By using pulsed ultraviolet laser illumination, some gain can probably be achieved in resolving smaller

particles. Image Analyzing Computers, Inc., of Monsey, NY, offers an automatic analyzer for reading out and analyzing aerosol data from holograms, making it possible to eliminate manual analysis. The analyzer was designed in collaboration with the Meteorological Office and the Chemical Defense Establishment at Porton Down, England. When used with holograms obtained with a pulsed ruby laser the analyzer provides information on the size, shape, and location of all particles having diameters larger than a few micrometers in a sample volume up to one liter in size.

Laser Doppler Velocimeters (LDV) are routinely used for measuring the velocity of gases, and these instruments can also be used to obtain information of particle size. In an LDV, the laser beam is split into two components which intersect at a small angle at the point where the measurement is to be made. The beams form interference fringes in the zone where they intersect, and if a particle passes through this zone, light is scattered from the bright fringes to a photomultiplier. The frequency of the a-c component of the resulting pulse is related to the velocity with which the particle intersects the fringes (and hence the velocity of the gas). The ratio of the a-c component of the pulse to the d-c component (seen at certain angles) is proportional to the particle size. Farmer,[200] Robinson et. al.,[201] Adrian and Orloff,[202] and Roberds[203] have done experimental and theoretical studies of LDV systems designed to enhance the sensitivity to particle size. A commercial LDV particle spectrometer based on Farmer's work is available from Spectron Development Laboratories, Inc. (Tullahoma, TN 37388). To our knowledge, the instrument has not been applied to in-stack measurements, and no report on its performance is available. An advantage of LDV systems is the potential for in situ sampling with little or no perturbation of the sample. Disadvantages are the sensitivity to particle refraction index and the complexity of the system.

Wilson[204] has described a technique where individual particles are accelerated through an orifice, and their velocity measured by means of an LDV. The difference between the velocity of the carrier gas and the particles is related to the aerodynamic diameter of the particles. This technique is still in a laboratory development stage, and it is difficult to assess its potential applicability to process streams at this time.

Hot Wire Anemometry

An electronic instrument has been developed by Medecki and Magnus[205] of KLD Associates, Inc. (Huntington, NY, USA) for sizing liquid droplets, especially in scrubbers. The instrument operates by inertial deposition of 1 μm to 600 μm spray droplets on a 5 μm diameter by 1 mm long platinum sensing element of the type used in hot-wire anemometry. Droplets smaller than 1 μm can be measured with a change in sensor geometry. The sensing element is electrically heated to a predetermined temperature. Impinging particles cool the sensing element, resulting in changes in resistance which are related to the sizes of the impinging droplets. The commercially available version of the device provides concentration outputs in six selectable size channels. Size calibrations for the channels are for water droplets; however, the application of the method is not, in principle, limited to water. Because the device is essentially a modification of a hot-wire anemometer, it could also theoretically be used to measure flow velocity and temperature, permitting impingement rates to be converted to aerosol concentrations. Although commercial prototypes are available now, this instrument is still under development and detailed performance analyses are not available.

Large Volume Samplers

McFarland and Bertch[206] have developed a system for collecting bulk samples of classified dust for subsequent use in health related research (see Figure 64). The system contains, in series, two cyclones, a virtual impactor, and a bag filter. The D_{50}'s of the cyclones are 10 and 7 μm, and that of the virtual impactor is 5 μm at a sample flowrate of 850 l/min. The particulate collection components are housed in an insulated enclosure that is 2.7 x 1 x 2 m. In sampling for 12 days at the outlet of an electrostatic precipitator, McFarland collected 8.1 kg of dust: 5.4 kg in the large cyclone, 1.3 kg in the small cyclone, 0.6 kg in the virtual impactor, and 0.8 kg in the filter. A new system, designed to sample at a flowrate of 33 m^3/min is now under development.[207]

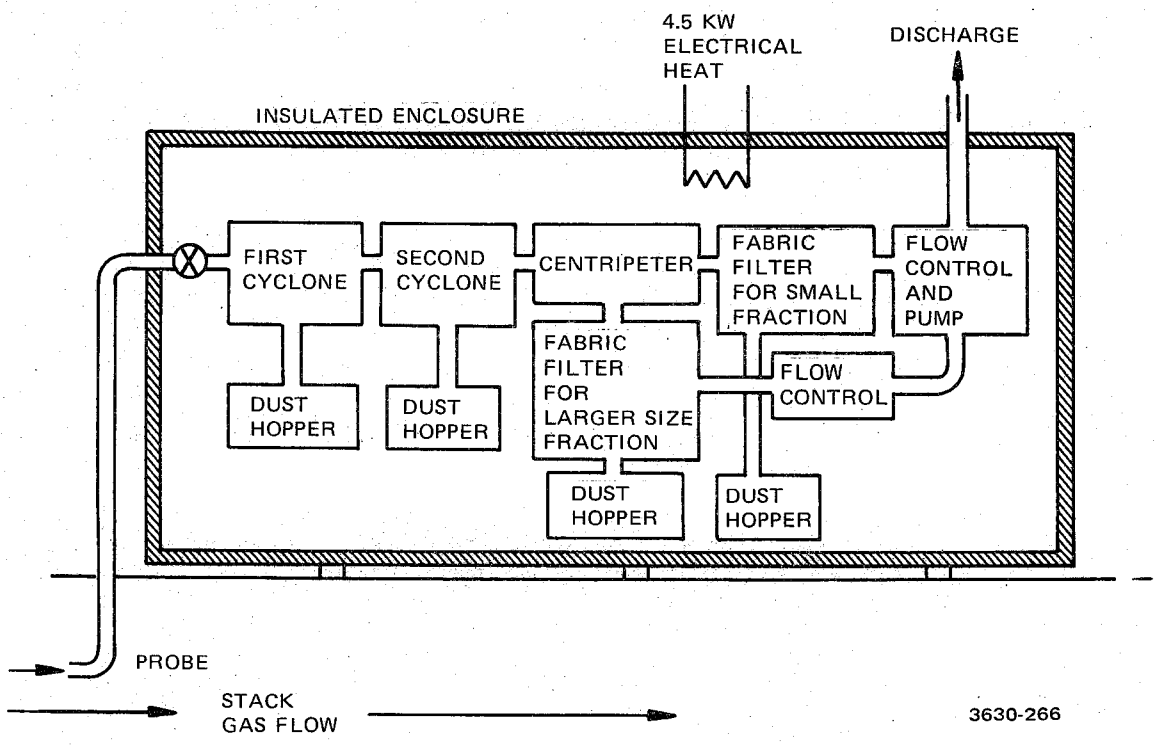

Figure 64. A system for collecting large volume samples from industrial process streams. After McFarland and Bertch.[206]

SECTION V

CONTROL DEVICE EVALUATION

OBJECTIVES OF CONTROL DEVICE TESTS

Several reasons exist for performing control device evaluations. These reasons may range from a verification of compliance with emissions requirements, to programs related strictly to research.

The majority of stationary air pollution sources need some type of control device to satisfy the national, state, or local air pollution regulations that limit the allowable emissions. In order to determine whether the plant is in compliance with these regulations, tests are performed to measure the amount of air pollutant emissions from the control device in question. This is one type of control device evaluation and it is usually the simplest and least expensive.

Another reason for performing tests on a control device is to optimize the performance of the installation. These tests might be requested by the owners of the plant where the control device is installed, or by the control device manufacturer. Usually tests of both the inlet and outlet particulate mass concentration are made resulting in a measure of the particulate collection efficiency. In some instances the fractional efficiency (efficiency as a function of particle size) is desired and measurements of the particle size distributions of the inlet and outlet dusts are necessary.

If a particular control device is performing poorly due to poor maintenance, or poor design, etc., then tests might be required in order to obtain data to be used in designing additional or replacement control device units.

To obtain data for purely research purposes is a fourth reason for performing a control device evaluation. In each test the data may be used to confirm existing theories of control device operation or to develop new theories for modelling and predicting control device performance. Research tests may involve total systems studies on the source/control device combination. These tests are usually the most complicated and expensive because of the amount of data that is desired.

TYPE AND NUMBER OF TESTS REQUIRED

As mentioned in the previous section, the type and number of tests that are performed during a control device evaluation depend on the reason for the tests and the amount of funding available.

In most cases the standard compliance test involves a determination of the particulate mass concentration at the control device outlet. Depending on the type of control device, some measurements of the gaseous emissions may also be required. The minimum number of tests to be performed during a compliance test is usually set by Federal or State regulations.

In order to study the performance of a control device, measurements of both the inlet and outlet mass concentration are performed. These data are required for calculations of the particulate collection efficiency. If the collection efficiency is to be related to particle size, then particle size measurements must be performed at the inlet and outlet. If the source is stable, fewer tests will be required than if the plant process is cyclic or variable

over an indeterminant time period. If a control device appears to be performing poorly, then other tests might be necessary, depending on the type of problem encountered. For example, on an electrostatic precipitator installation, a measurement of the dust resistivity could explain a poor collection efficiency. At a fabric filter installation, the problem might be torn bags in one baghouse compartment. This might require a special test strategy to isolate this compartment. In a scrubber installation, excessive liquid entrainment could cause poor performance and tests might be required to measure the droplet concentration or size distribution.

Data that are required for control device design are the particulate mass concentration; the particle size distribution; the physical, chemical, and electrical properties of the dust to be collected; and the effluent gas temperature, pressure, and composition. A fairly extensive testing program is necessary in order to obtain these data. Tests should be performed during all normal process cycles and with all types of expected feedstock to insure that the control device will not be designed undersize.

If testing is to be performed on a control device for research purposes only, then the tests that are made are dependent on the information which is desired as well as the amount of funding. As is true of all experimental type programs, the more data that are obtained, the more reliable will be the conclusions based on those data. Usually control device research programs are designed to gather as much information as practical for the money available. Generally, research studies concern the particulate mass concentrations at the inlet and outlet, the inlet and outlet particle size distributions, gas analysis, the dust properties, the control device operation parameters, plant process data, previous control device maintenance data, and the economics of the particular control device. Of course, the type of control device and plant will

determine the specific tests which are conducted. For example, measurement of the dust resistivity would not be required at a baghouse or scrubber. Liquid feed rates, pressures, etc., however, would be required.

In some instances the type of tests which are conducted depend on cooperation from the plant personnel. They may or may not be willing to alter the feedstock or change the settings on the particle collector controls, for example. Usually these problems are worked out as the test plan is developed.

In summary, control device testing is not a routine operation that has had all the problems worked out or specific procedures developed. Each plant-control device combination is unique and should be treated as such. Certain problems exist at one installation which might not be encountered at any other control device installation. The number of specific tests which should be performed will depend on the type of control device, the stability of the source, the length of time allowed for testing, and the available funding. It is usually advisable to perform as many tests as practical, because later it may be found that some tests must be disqualified.

GENERAL PROBLEMS AND CONSIDERATIONS

It is rare that a control device evaluation program does not encounter several problems in performing the required tests. These problems can cover a wide range of circumstances and affect the ability to complete the test program successfully. Although it is impossible to anticipate every contingency, careful planning can reduce the likelihood of complete failure of the test program. A discussion of the more commonly encountered problems and situations is presented below.

Plant Location

Plant location will generally not be a problem unless it is a long distance to a city where acceptable accommodations and supplies are available, or if the nearest airport is not convenient for shipping equipment or for transportation of personnel. Also, depending on the time of year, the local weather can force postponement of testing, unusual working hours, or require the construction of special shelters for test crew members required to work out of doors.

Laboratory Space

Usually arrangements can be made to obtain the use of a portion of the chemical laboratory normally found at most industrial plants. However, the location of this laboratory may not be convenient to the sampling site. As part of the pre-test site survey, a decision should be made as to whether some type of temporary, mobile lab or trailer would be more convenient than the plant laboratory space.

Sampling Location and Accessibility

In most new plants the requirements of compliance testing (ports, platforms, power, etc.) have been taken into account in designing the facility. This is frequently not true of older plants. At many sites, the equipment must be hand carried or hoisted to the sampling location. Stack testing can be difficult without a properly designed platform. Sometimes platforms and scaffolding must be erected to allow direct access to the sampling location. It is recommended that a pre-test site survey be conducted to determine if any platforms or shelters must be built prior to actual testing. This is also a good time to inspect the entire plant and establish contact with the plant employee who will be responsible for liaison with the plant managers.

Power Requirements

Depending on the amount of equipment operating at one time, the accessible power outlets at most sampling locations may or may not be adequate. In many instances long extension cords are necessary, and in some cases a transformer is needed to change the available power to 110 volts. Before testing, the power requirements should be calculated and plant personnel contacted if it appears that additional power outlets will be required.

Type of Ports

Almost all sampling of flue gases and dusts requires some type of port. Before the tests begin it is advisable to know the location, type, number, and size of the ports that are available (inlet, outlet, stack). For some types of test equipment, the ports may be too small and require replacement with larger diameter ports. The number of ports will also determine the flexibility that one has in planning for traverses of the duct to obtain representative samples. There may also be some difficulties with the type of ports that are installed, whether flanged or threaded internally or externally. Other problems commonly encountered with sampling ports are the length of the port nipple, rusting of port caps onto the nipples, and caking of dust inside the ports which must be chiseled away before sampling can begin, etc.

Flue Gas Velocity and Nozzle Sizes

Depending on the location of the sampling ports, the flue gas velocity can sometimes be very high or very low. Isokinetic sampling is highly desirable when sampling dusts. Gas velocities are usually lowest in the transforms immediately upstream or downstream from control devices. In these instances the nozzle

sizes required for isokinetic sampling may be larger than standard sizes. On the other hand high gas velocities can require impractically small nozzles, especially when sampling less than 14 liters per minute. If the concern is with particles smaller than about five micrometers diameter, errors from non-isokinetic sampling are less significant.

Duct Size

The duct size will generally determine whether traversing is feasible. Traversing twenty foot deep ducts is not a simple matter, expecially if the probes must be heat traced. Special hoists sometimes must be erected. Small circular ducts usually cannot be effectively traversed, and, in some cases instruments that are normally operated in situ must be operated in an oven with special sampling probes for extracting the samples.

Gas Temperature and Dew Point

Under some circumstances the gas temperature can cause difficulties. Too high a temperature can cause galling, metal fatigue, collection substrate problems, and poor vacuum sealing for in situ sampling equipment. Low gas temperatures can be especially troublesome when the slightest temperature drop can cause excursions through dew points causing condensation within the probe or on collection filters. In either case, probes and other sampling equipment may have to be insulated or heat traced to prevent premature cooling of the gases. H_2SO_4 condensation, or chemical reaction can mask particulate weight gains on glass fiber collection substrates. Usually heating to 17°C above the gas dew point is recommended to avoid condensation. At some plants temperature fluctuations can occur as a result of process variations or excess air in boiler operations. A knowledge of this type of activity is desirable before testing.

Water Droplets and Corrosive Gases

At some types of scrubber or wet precipitator operations, water droplet mists will exist at the outlet sampling location. These droplets may be clean water or contain dissolved or suspended solids. At some locations these droplets might be the object of sampling; however, at most locations the droplets must be evaporated in order to capture the particulate matter without clogging or caking the filter mat and to obtain an accurate measure of the particle size distribution emitted to the atmosphere. Corrosive gases can also be difficult to handle. SO_2 or SO_3 can be a problem if the flue gas has a high moisture content or if the gas temperature is near the dew point. Corrosion of equipment can occur, as well as the masking of filter weight gains by SO_2 uptake or H_2SO_4 mists.

At some locations, particle growth, such as that found in H_2SO_4 mists, can mask the true concentration of fine particulate matter. This can only be alleviated by keeping the gas temperature in the sampling train sufficiently high or by dilution with clean dry air. Reevaporation of H_2SO_4 mists requires very high temperatures, and this problem can usually more easily be avoided than corrected.

Volatile Components

In planning an effective sampling protocol, it is necessary to consider whether or not volatile components make up a significant part of the emissions. Smelting processes are a notable example of sources where much of the mass emissions consist of compounds that exist in vapor form at flue gas temperatures, but condense to form solid particles upon cooling in the atmosphere. For process streams such as these, the nature or quantity of the sample is dependent on the temperature of the sampling train. It

is usually advantageous to design a special train with several stages kept at progressively lower temperatures, in order to fully understand the nature of the emissions. Sulfuric acid is a good example of a volatile pollutant that can present control and sampling problems.

Process Cycles and Feedstock Variations

In many plants, such as iron and steel mills and smelting operations, the effluent gas and dust characteristics vary dramatically over a single process cycle. If the test objective is to obtain a good average of the emissions, the sampling time is quite flexible. However, if the test objective is to isolate emissions from a particular part or from each part of an average cycle, the sampling time must be short, or the tests interrupted periodically and run only during the part of interest. At some plants the supply of fuel or feedstock can change. Normally a plant will maintain logs of the important process parameters, and this information should be obtained and correlated with the test data. This can avoid costly repetition of test procedures or invalidation of the test data.

Long and Short Sampling Times

In general, control devices are very efficient particle collectors. High collection efficiencies mean that the inlet and outlet dust concentrations can differ by factors up to 1000. Particular problems arise when sampling requirements demand that minimum (or maximum) amounts of dust be collected in order to obtain valid results. At a control device inlet, high dust concentrations may necessitate undesirably short sampling durations. Extremely short (less than five minutes) sampling times may not allow an adequate period of integration over the plant process cycles unless the cycles are very stable and long. On the other

hand, low dust concentrations at control device outlets sometimes require sampling times of 12 hours or longer hampering the study of emissions from each part of a process cycle. It is helpful to use low flow rate sampling devices at control device inlets and high flow rate devices at outlets in order to obtain reasonable sampling times.

Planning a Field Test

Table XVII indicates some of the considerations and problems that must be dealt with in developing a test plan for control device evaluations. Although this table is designed to serve as a planning outline, the relative importance of the facets of the plan, or considerations that are not listed, can only be established from a good understanding of the plant-control device system and the objectives of the test.

TABLE XVII

PARTICULATE CONTROL DEVICE TESTS

Objective of Tests	Assure Compliance with EPA Regulation	Optimize Performance of Control Device	Obtain Design Data for Control Device	Obtain Data for Modeling Studies	Systems Studies Process and Control Device
Tests Required					
Mass Concentration	O	O	I	I,O	I,O
Opacity	O	O			O
Gas Composition	O	O	I	I,O	I,O
Gas Temperature			I	I,O	I,O
Gas Volume	O		I	I,O	I,O
Pressure			I	I,O	I,O
Velocity Distribution		C	C	X	X
Particle Size Distribution			I	I,O	I,O
Dust Composition			Qualitative	Qualitative	I,O*
Dust Resistivity				ESP only	X
Control Device Data					
Operating				X	X
Design				X	X
Maintenance					X
Plant Process Data				D	D
Economic Data				Optional	X
Technical Considerations (Decisions/Problems)					
Adequate Space, Electric Power	O	O	I	I,O	I,O
Laboratory Space	X	X	X	X	X
Number of Tests Required	3	D	D	D	D
Isokinetic Sampling	X	X	X	X	X
Condensible Vapors/ Volatile Particles		C	C	C	C
Mass Concentration/ Sampling Time	C	C	C	C	C
Traverse Strategy	O	O	O	O	O
Aerosol Gas Velocity	C	C	C	C	C
Process/Emission Variations	C	C	C	C	C
Select Particle Sizing Methods			I,O	I,O	I,O
Select Mass Train Type	O	O	I,O	I,O	I,O
Select Gas Analysis Methods		D	D	D	D
Real-Time Monitors Needed		D	D	D	D
Filter Mass Stability		C	C	C	C
Sample Preservation		D	D	D	D

Key:
- O - Outlet
- I - Inlet
- X - Required
- D - Decision based on specific site or test objectives
- C - Must be considered
- * vs. Particle Diameter

SECTION VI

SUMMARY

It is disappointing to everyone involved in aerosol sampling that more convenient and efficient methods are not available for making measurements of particle size and concentration. When good resolution and accuracy are needed, one must rely on manual techniques such as filters for mass and cascade impactors for sizing measurements. Nevertheless, progress is being made in the development of more convenient methods that yield real-time information. For some applications, such instruments already yield useful information. Table XVIII summarizes the current status of particulate sampling methods.

TABLE XVIII

STATUS OF PARTICULATE SAMPLING METHODS FOR PROCESS STREAMS

MASS CONCENTRATION	
Filters - C	Transmissometers - P
β-Particle Attenuation - P	Light Scattering - P, CP
Charge Transfer - CP	Piezoelectric Microbalances - R
OPACITY	
Transmissometers - C Nephelometers - CP	
PARTICLE SIZE	
Cascade Impactors - C, P	Diffusion Batteries and Condensation Nuclei Counters - P
Cyclones - P, C	
Light Scattering - P	Electrical Mobility - P

C - Commercial instruments in everyday use.
CP - Commercial instruments available, these may require special adaptation or skills.
P - Prototype systems have been used. These require special adaptation or skills.
R - Established measurement technique, but not applied to process streams.

REFERENCES

1. U.S. Environmental Protection Agency. Standards of Performance for New Stationary Sources. Federal Register, 43(160), 1977. pp. 41776-41782.

2. U.S. Environmental Protection Agency, Standards of Performance for New Stationary Sources. Federal Register, 42(187), 1976. pp. 42020-42028.

3. American Society for Testing and Materials. Standard Method for Sampling Stacks for Particulate Matter, Designation D2928-71, In: Annual Book of ASTM Standards, Philadelphia, Pennsylvania, 1977. pp. 592-618.

4. American Society of Mechanical Engineers. Determining Dust Concentrations in a Gas Stream, Power Test Code 27. New York, New York, 1957. 25 pp.

5. U.S. Environmental Protection Agency. Standards of Performance for New Stationary Sources. Federal Register, 42(160), 1977. pp. 41755-41758.

6. U.S. Environmental Protection Agency. Standards of Performance for New Stationary Sources. Federal Register, 41(160), 1977. pp. 41758-41768.

7. Martin, R.M. Construction Details of Isokinetic Source-Sampling Equipment. APTD-0581, U.S. Environmental Protection Agency, Research Triangle Park. North Carolina, 1971.

8. Brenchly, D.L., C.D. Turley, and R.F. Yarmac. Use of the EPA Particulate Trains for Compliance Testing. In: Air Pollution Control and Industrial Energy Production, Noll, Davis, and Duncan, eds. Ann Arbor Science Publishers, Inc., Ann Arbor, Michigan, 1975. pp. 73-85.

9. Rom, J.J. Maintenance, Calibration, and Operation of Isokinetic Source Sampling Equipment. APTD-0576, U.S. Environmental Protection Agency, Research Triangle Park, North Carolina, 1972. 35 pp.

10. Selle, S.H. and G.H. Gronhovd. Some Comparisons of Simultaneous Stack Gas Particulate Determinations Using the ASME and EPA Methods. J. Eng. Power, 95(3):145-149, 1973.

11. Heinsohn, R.J., J.G. Wehrman, J.W. Davis, G.W. Anderson. A Comparison of the Particulate Matter Obtained Using a Dilution Sampling System and a Method 5 Sampling System. In: Proceedings of the 70th Annual Meeting of the Air Pollution Control Association, Toronto, Ontario, Canada, 1977. Paper 77-12.1.

12. Peters, E.T., P.L. Levins, A.W. Doyle, K.N. Werner, and C.H. Summers. Interim Report: Evaluation of the EPA Particulate Measurement Method as applied to Oil-Fired Utility Boilers. Arthur D. Little, Inc., Cambridge, Masschusetts, 1973. 32 pp. Prepared under Contract No.68-02-0632 for the U.S. Environmental Protection Agency, Research Triangle Park, North Carolina, 1973.

13. Felix, L.G., G.I. Clinard, G.E. Lacey, and J.D. McCain. Inertial Cascade Impactor Substrate Media for Flue Gas Sampling. EPA-600/7-77-060, U.S. Environmental Protection Agency, Research Triangle Park, North Carolina, 1977. 89 pp.

14. Forrest, J. and L. Newman. Sampling and Analysis of Atmospheric Sulfur Compounds for Isotope Ratio Studies. Atmospheric Environment, 7(5):516-573, 1973.

15. Patankar, U. and W.T. Ott. An Experimental Method of Particulate Sampling of High Humidity Flue Gases. In: Proceedings of 70th Annual Meeting, Air Pollution Control Association, Toronto, Ontario, Canada, 1977. Paper 77-49.3.

16. Elder, J.C., M.I. Tillery, and H.J. Ettinger. Evaluation of EPA Method 5 Probe Deposition and Filter Media Efficiency. In: Proceedings of 70th Annual Meeting, Air Pollution Control Association, Toronto, Ontario, Canada, 1977. Paper 77-12.3.

17. Hamil, H.F., D.E. Camann, and R.E. Thomas. The Collaborative Study of EPA Methods 5, 6, and 7 in Fossil Fuel Fired Stream Generators - Final Report. EPA-650/4-74-013. U.S. Environmental Protection Agency, Research Triangle Park, North Carolina, 1974. 39 pp.

18. Hamil, H.F., and D.E. Camann. Collaborative Study of Method for the Determination of Particulate Matter Emissions from Stationary Sources (Portland Cement Plants). EPA-650/4-74-029. U.S. Environmental Protection Agency, Research Triangle Park, North Carolina, 1974. 45 pp.

19. Hamil, H.F., and R.E. Thomas. Collaborative Study of Method for the Determination of Particulate Matter Emissions from Stationary Sources (Municipal Incinerators). EPA-650/4-74-022. U.S. Environmental Protection Agency, Research Triangle Park, North Carolina, 1974. 37 pp.

20. Hamil, H.F., and R.E. Thomas. Collaborative Studies of Particulate Emissions Measurements by EPA Methods, 2, 3, and 5 Using Paired Particulate Sampling Trains (Municipal Incinerator). EPA-600/4-76-014, U.S. Environmental Protection Agency, Research Triangle Park, North Carolina, 1976. 91 pp.

21. Lytle, J.H. ASME Method for Measurement of Particulate Emissions. In: Proceedings of the Workshop on Sampling, Analysis, and Monitoring of Stack Emissions. Electric Power Research Institute, Dallas, Texas, 1975. pp. 203-220.

22. National Council of the Paper Industry for Air and Stream Improvement, Inc. Comparisons of Source Particulate Emissions Measurement Methods for Combination Fuel-Fired Boilers, Atmospheric Quality Improvement Technical Bulletin No. 75. New York, N.Y. 38 pp.

23. Boubel, R.W. A High Volume Stack Sampler. Journal of the Air Pollution Control Association, 21(12):783-787, 1971.

24. Boubel, R.W., and J.M. Morford. Simultaneous EPA Method 5 and High Volume Sampling of Wood Fired Boilers. Presented at the 70th Annual Meeting of the Air Pollution Control Association, Toronto, Ontario, Canada, 1977. Paper 12-2.

25. Beckwith, G.S. Particulate Sampling with a Compact Intermediate Volume Sampler. Preprint, Air Pollution Control Association, Pacific Northwest International Section, Boise, Idaho, 1974, 35 pp. (Presented at the 67th Annual Meeting of the Air Pollution Control Association, Pacific Northwest International Section, Boise, Idaho, 1974).

26. Felix, L.G., G.I. Clinard, G.E. Lacey, and J.D.McCain. Inertial Cascade Impactor Substrate Media for Flue Gas Sampling. EPA-600/7-77-060. U.S. Environmental Protection Agency, Research Triangle Park, North Carolina, 1977. 89 pp.

27. Appel, B.R., and J.J. Wesolowski. Selection of Filter Media for Particulate Sampling with a Lundgren Impactor. AIHL Report No. 125, California Department of Public Health, Berkley, California, 1972. 22 pp.

28. Elder, J.C., M.I. Tillery, and H.J. Ettinger. Evaluation of EPA Method 5 Probe Deposition and Filter Media Efficiency. In: Proceedings of the 70th Annual Meeting, Air Pollution Control Association, Toronto, Ontario, Canada, 1977. Paper 77-12.3.

29. Mueller, P.K. Selection of Filter Media: An Annotated Outline. Presented: 13th Conference on Methods in Air Pollution and Industrial Hygiene Studies, University of California, Berkley, California, 1972.

30. Lundgren, D.A., and T.C. Gunderson. Efficiency and Loading Characteristics of EPA's High-Temperature Quartz Fiber Filter Media. Amer. Ind. Hyg. Assoc. J. 36(12):866-871, 1975.

31. Lundgren, D.A., and T.C. Gunderson. Filtration Characteristics of Glass Fiber Filter Media at Elevated Temperatures. EPA-600/2-76-192. U.S. Environmental Protection Agency, Research Triangle Park, North Carolina, 1976. 95 pp.

32. Stafford, R.G., and H.J. Ettinger. Filter Efficiency as a Function of Particle Size and Velocity. Atmospheric Environment, 6:353-362, 1972.

33. Stafford, R.G., and H.J. Ettinger. Efficiency of IPA-1478 Filter Paper Against Polystyrene Latex and Dioctyl Phthalate Aerosols, Amer. Ind. Hyg. Assoc. J., 32(5):493-498, 1972.

34. Stafford, R.G., and H.J. Ettinger. Comparison of Filter Media Against Liquid and Solid Aerosols. Amer. Ind. Hyg. Assoc. J., 32(5):319-326, 1971.

35. Horn, W. Process for Continuous Gravimetric Determination of the Concentration of Dustlike Emissions. Staub-Reinhalt, Luft 28(9): 20-24, 1968.

36. Dresia, H., and F. Spohr. Experience with the Radiometric Dust Measuring Unit Beta Staubmeter. Staub-Reinhalt, Luft, 31(6):19-27, 1971.

37. Lilienfeld, P., and J. Dulchinos. Vehicle Particulate Exhaust Mass Monitor. GCA-TR-72-11-G, GCA Corporation, Bedford, Massachusetts, 1972. 41 pp. Prepared under Contract No. 68-02-0209 for U.S. Environmental Protection Agency, Durham, North Carolina, 1972.

38. Sem, G.J., and J.A. Borgos. State of the Art: 1971 Instrumentation for Measurement of Particulate Emissions from Combustion Sources Volume IV: Experiments and Final Report. EPA-650/2-73-022, U.S. Environmental Protection Agency, Washington, D.C., 1973. 55 pp.

39. Nader, J.S., and D.R. Allen. A Mass Loading and Radioactivity Analyzer for Atmospheric Particulate. Presented at the 52nd Annual Meeting of the Air Pollution Control Association, Los Angeles, California, 1959.

40. Dresia, H., and R. Mucha. Registering, Radiometric Measuring Instrument for Combined Measurement of the Emissions of Dust and Radioactivity in Air. Staub-Reinhalt, Luft 34(4):103-106, 1974. [English Translation].

41. Duke, C.R., and B.Y. Cho. Development of Nucleonic Particulate Emission Gauge. EPA-APTD-1150, U.S. Environmental Protection Agency, Research Triangle Park, North Carolina, 1972. 62 pp.

42. Lilienfeld, P. Beta-Absorption Impactor Aerosol Mass Monitor. American Industrial Hygiene Association Journal, 31(6):722-729, 1970.

43. Benarie, M., and P. Bodin. Mise au point et essais d'utilisation d'un appareil continu pour la mesure de poussières par absorption de rayons bêtu. Rev. Pollution Atm 35:147-155, 1967.

44. Jackson, M.R., A. Lieberman, L.B. Townsend, and W. Romanek. Prototype Fly Ash Monitor for Municipal Incinerator Stacks. In: Proceedings of the 1970 National Incinerator Conference, ASME, Cincinnati, Ohio, 1970. pp. 182-188.

45. Dresia, H., P. Tischotter, and G. Felden. Kontinuierliches Messeen des Staubgehaltes in Luft und Abgasen mit Betastrahlen. VDI-Z, 106(24):1191-1195, 1964.

46. Lilienfeld, Pedro. Design and Operation of Dust Measuring Instrumentation Based on the Beta-Radiation Method. Staub-Reinhalt, Luft, 35(12):458-465, 1975.

47. Sem, G.J., and J.A. Borgos. An Experimental Investigation of the Exponential Attenuation of Beta Radiation for Dust Measurement. Staub Reinhalt, Luft, 35(1):5-9, 1975.

48. Schnitzler, H., O. Maier, and K. Jander. Messtand fur die Prufung and Kalibriering von Registrierenden Staub-und Gasmessgeraten in einem Steinkohlengefeuerten. Kraftwerk. Schr Rerihe Ver. Wass. Boden Lufthyg. Berlin-Dahlem, Vol. 33, Stuttgart, 1970.

49. Jackson, M.R. Evaluation of Field Prototype Beta Gauges. Performed on Contract #68-02-1216 for U.S. Environmental Protection Agency.

50. Giever, P.M. Development of Automatic Monitors; Light Transmission and Beta Gaging. In: Proceedings of the Specialty Conference on Continuous Monitoring of Stationary Air Pollution Sources, Air Pollution Control Association, Greater St. Louis Section, St. Louis, Missouri, 1975. pp. 119-134.

51. Ranade, M.B. Sampling Interface for Quantitative Transport of Aerosols. EPA-750/2-74-016, U.S. Environmental Protection Agency Research Triangle Park, North Carolina, 1973. 142 pp.

52. Sauerbrey, G. Verwendung von Schwingquarzen zur Wagung dunner Schichten und Zur Milrowägung. Zeitschrift für Physik Vol 155:206-222, 1959.

53. Sem, G.J., J.A. Borgos, J.G. Olin, J.P. Pilney, B.Y.H. Liu, N. Barsic, K.T. Whitby, and F.D. Dorman. State of the Art, 1971 Instrumentation for Measurement of Particulate Emissions from Combustion Sources. Vol. II: Particulate Mass-Detail Report. APTD-0734, U.S. Environmental Protection Agency, Research Triangle Park, North Carolina, 1971. 223 pp.

54. Sem, G.J., K. Tsurubayashi, and K. Homma. Performance of the Piezoelectric Microbalance Respirable Aerosol Sensor. Amer. Ind. Hyg. Assoc. J., 38:580-588, 1977.

55. King, W.H., Jr. The State of the Art in Piezoelectric Sensors. In: Proceedings of the 25th Annual Symposium on Frequency Control, U.S. Army Electronics Command, Ft. Monmouth, New Jersey, 1971. 5 pp.

56. Daley, P.S., and D.A. Lundgren. The Performance of Piezoelectric Crystal Sensors Used to Determine Aerosol Mass Concentrations. American Industrial Hygiene Association Journal 36(7):518-532, 1975.

57. Lundgren, D.A., L.D. Carter, and P.S. Daley. Aerosol Mass Measurement Using Piezoelectric Crystal Sensors. In: Fine Particles-Aerosol Generation, Measurement, Sampling, and Analysis, B.Y.H. Liu, ed., Academic Press, New York, New York, 1976. pp. 485-519.

58. Harper, W.R. Contact and Frictional Electrification. Oxford University Press, London, England, 1967. 369 pp.

59. Loeb, L.B. Static Electrification. Springer-Verlag, Berlin, Germany, 1958. 240 pp.

60. Schutz, A. Eine Anordnung zur registrierenden Kontaktelek Trischen Staubmessung. Staub-Reinhalt, Luft, 24(9):359-363, 1964.

61. Prochazka, R. Neneste Entwicklung des auf Kontaktelektrischer Basis beruhenden Staubgehaltsme-Bgerätes Koni Test. Staub-Reinhalt, Luft, 24(9):353-359, 1964.

62. Prochazka, R. Recording Dust Measurement with the Konitest. Staub-Reinhalt, Luft, 26(5):22-28, 1966.

63. Koichi, Iinoya. Research and Development in Japan on Fine Particle Measurement and New Control Devices. In: Fine Particles-Aerosol Generation, Measurement, Sampling, and Analysis. B.Y.H. Liu, ed., Academic Press, New York, New York, 1976. pp. 23-38.

64. Kisler, C.Ya., and B.S. Fishkin. Type PK-4 Automatic Immersion Contact Electric Dust Measurement Instrument. U.S./U.S.S.R. Working Group on Stationary Source Air Pollution Control Technology Project A-4. APTIC No. 75270.

65. John, W. Investigation of Particulate Matter Monitoring Using Contact Electrification. EPA-650/2-75-043, U.S. Environmental Protection Agency, Research Triangle Park, North Carolina, 1975. 52 pp.

66. Gruber, A.H., and E.K. Bastress. Application of the Triboelectric Effect to the Measurement of Airborne Particles. Presented at the 2nd Joint Conference on Sensing of Environmental Pollutants. Instrument Society of America, Pittsburgh, Pennsylvania, 1973. pp. 161-168.

67. Gruber, A.H. In-Stack Continuous Particulate Monitoring Using the Charge Transfer Process. In: Proceedings of the Specialty Conference on Continuous Monitoring of Stationary Air Pollution Sources, Air Pollution Control Association, Greater St. Louis Section, St. Louis, Missouri, March, 1975. pp. 135-154.

68. Knapp, K.T. New Techniques for Continuous Measurement of Mass Emissions. In: Proceedings of the Workshop on Sampling, Analysis and Monitoring of Stack Emissions. Electric Power Research Institute, Dallas, Texas, 1975. pp. 49-78.

69. IKOR, Inc. Results of Parallel Testing with an IKOR Air Quality Monitor and an EPA Train. Unpublished Report, Gloucester, Massachusetts. 11 pp.

70. Eastman, W.B. Use of an IKOR Model 207 Air Quanity Monitor to Measure Particulate Emissions from Dry Scrubber Systems. Presented at the Meeting of the Metallurgical Society of American Institute of Mining, Metallurgical, and Petroleum Engineers, New York, N.Y. 1975. Paper A75-34.

71. Conner, W.D. Measurement of the Opacity and Mass Concentration of Particulate Emissions by Transmissometry. EPA-650/2-74-128, U.S. Environmental Protection Agency, Research Triangle Park, North Carolina, 1974. 39 pp.

72. Uthe, E.E., and C.E. Lapple. Study of Laser Backscatter by Particulates in Stack Emissions. EPA-R2-089, U.S. Environmental Protection Agency, Research Triangle Park, North Carolina, 1972. 518 pp.

73. Schneider, W.A. Opacity Monitoring of Stack Emissions: A Design Tool with Promising Results. In: The 1974 Electric Utility-Generation Planbook, McGraw-Hill, New York, New York, 1974. pp. 74-76.

74. Duwel, L. Latest State of Development of Control Instruments for the Continuous Monitoring of Dust Emissions. Staub-Reinhalt, Luft, 28(3):42-53, 1968.

75. Bühne, K.-W., and L. Duwel. Recording Dust Emission Measurements in the Cement Industry with the RM4 Smoke Density Meter Made by Messrs Sick, Staub-Reinhalt, Luft, 32(8):19-26, 1972.

76. Larssen, S., D.S. Ensor, and M.J. Pilat. Relationship of Plume Opacity to the Properties of Particulates Emitted from Kraft Recovery Furnaces. Tappi, 55(1):88-92, 1972.

77. Cristello, J.C. Evaluation of Lear Siegler Transmissometer. Preprint, Environmental Services. Camas, Washington, November 5, 1974. 4 pp.

78. Reisman, E., W.D. Gerber, and N.D. Potter. In Stack Transmissometer Measurement of Particulate Opacity and Mass Concentration. EPA-650/2-74-120, U.S. Environmental Protection Agency, Research Triangle Park, North Carolina, 1974. 105 pp.

79. Nader, J.S. Source Monitoring. In: Air Pollution, 3rd Ed., Vol III, Measuring, Monitoring, and Surveillance of Air Pollution, A.C. Stern, ed. Academic Press, New York, New York,1976. pp. 589-645.

80. Dobbins, R.A., and G.S. Jizmagian. Particle Size Measurements Based on Use of Mean Scattering Cross Sections. J. Opt. Soc. Am., 56(10):1351-1354, 1966.

81. Smith, W.B., and J.D. McCain. Particle Size Measurement in Industrial Flue Gases. In: Air Pollution Control - Vol. III, Werner Strauss, ed. John Wiley and Sons, New York, New York (in press).

82. Kerker, M. The Scattering of Light and Other Electromagnetic Radiation. Academic Press, New York, New York, 1969. pp. 334-343.

83. Quenzel, H. Influence of Refractive Index on the Accuracy of Size Determination of Aerosol Particles with Light-Scattering Aerosol Counters. Appl. Opt. 8(1):165-169, 1969.

84. Hodkinson, J.R., and J.R. Greenfield. Response Calculations for Light-Scattering Aerosol Counters and Photometers. Appl. Opt. 4(11):1463-1474, 1965.

85. Ensor, D.S., and L.D. Bevan. Application of Nephelometry to the Monitoring of Air Pollution Sources. Presented at the 1977 Annual Meeting of the Air Pollution Control Association, Pacific Northwest International Section, Seattle, Washington, 1973. Paper 73-AP-14.

86. Ensor, D.S. Plume Opacity Measurements. In: Proceedings of the Symposium on Control of Fine-Particulate Emissions from Industrial Sources, Particulate Technical Sub-Group of the U.S. - U.S.S.R. Working Group on Stationary Source Air Pollution Control Technology, San Francisco, California, 1974. pp. 641-672.

87. Ensor, D.S., L.D. Bevan, and G. Markowski. Application of Nephelometry to the Monitoring of Air Pollution Sources. In: Proceedings of the Sixty-Seventh Annual Meeting, Air Pollution Control Association, Denver, Colorado, 1974. Paper 74-110.

88. Ensor, D.S., B.S. Jackson, S. Calvert, C. Lake, D.V. Wallon, R.E. Nilan, K.S. Campbell, T.A. Cahill, and R.G. Flucchini. Evaluation of a Particulate Scrubber on a Coal-Fired Utility Boiler. EPA-600/2-75-074, U.S. Environmental Protection Agency, Research Triangle Park, North Carolina, 1975. 200 pp.

89. Ensor, D.S., and M.J. Pilat. Calculation of Smoke Plume Opacity from Particulate Air Pollutant Properties. J. Air Poll. Control Assoc., 21(8):496-501, 1971.

90. Shofner, F.M., G. Kreikebaum, and H.W. Schmitt. In-Situ Continuous Measurement of Particulate Mass Concentration. Presented at the 68th Annual Meeting and Exhibition of the Air Pollution Control Association, Boston, Massachusetts, 1975. Paper 75-41.1.

91. Schmitt, H.W., R.J. Nuspliger, and G. Kreikebaum. Continuous In-Situ Particulate Mass Concentration Measurement of Industrial Discharges. Presented at the 70th Annual Meeting of the Air Pollution Control Association, Toronto, Ontario, Canada, 1977. Paper 77-27.4.

92. Environmental Systems Corporation. Sales Literature for the Particulate Monitor Model P-5A, Knoxville, Tennessee.

93. Schmitt, H.W., G. Kreikebaum, and F.M. Shofner. New Developments in Electro-Optical Monitoring of Particulates. Environmental Systems Corporation, Knoxville, Tennessee, 1976. 33 pp. Presented at: Industrial Pollution Control Instrumentation Conference, Newark, New Jersey, 1976.

94. Hood, K.T., and T. Briody. Evaluation of the Performance and Applicability of a Laser Light Backscatter Measurement Instrument to the Monitoring of Particulate Concentration Prior to and Exiting a Kraft Recovery, Furnace Electrostatic Precipitator. Special Report. National Council of the Paper Industry for Air and Stream Improvement, New York, New York,1977. 24 pp.

95. Wostradowski, R.A. Continuous Particulate Monitoring of Hog-Fuel Fired Power Boilers and Kraft Recovery Boilers. In: Preprints of the 1977 Environmental Improvement Conference, Canadian Pulp & Paper Association, Moncton, New Brunswick, Canada, 1977. pp. 87-94.

96. Tipton, D.F. A Particle Analyzer for Stack Emissions. Powder Tech. 14:245-252. 1976.

97. Sem, G.J., J.A. Borgo, J.G. Olin, J.P. Pilney, B.Y.H. Liu, N. Barsic, K.T. Whitby, and F.D. Dorman. State of the Art: 1971 Instrumentation for Measurement of Particulate Emissions from Combustion Sources. Vol I: Particulate Mass-Summary Report. APTD-0733, U.S. Environmental Protection Agency, Research Triangle Park, North Carolina, 1971. 194 pp.

98. Altpeter, L.L., Jr., T.S. Hermann, J.P. Pilney, A.J. Senechal, and D.L. Overland. Performance of Flame Ionization Detector as Atmospheric Aerosol Monitor. I. Conventional Model. Environ. Sci. Tech., 10(10):997-1002, 1976.

99. Goldschmidt, V.W. Measurement of Aerosol Concentrations with a Hot Wire Anemoneter. J. of Colloid Sci., 20:617-634, 1975.

100. Hodkinson, J.R. The Optical Measurement of Aerosols. In: Aerosol Science, C.N. Davis, ed. Academic Press, New York, New York, 1966. Chapter 10, pp. 287-357.

101. U.S. Environmental Protection Agency. Appendix B - Performance Specifications, Performance Specification 1 - Performance Specifications and Specification Test Procedures for Transmissometer Systems for Continuous Measurement of the Opacity of Stack Effluents. Federal Register, 39(177):32860-32862, 1974.

102. Beutner, H.P. Measurement of Opacity and Particulate Emissions with an On-Stack Transmissometer. J. Air Pollution Control Association, 24(9):865-871, 1974.

103. Haville, D. A Single-Pass Photoelectric Opacity Measurement System. In: Proceedings of the Specialty Conference on Continuous Monitoring of Stationary Air Pollution Sources, Air Pollution Control Association, St. Louis, Missouri, 1975. pp. 154-170.

104. Pfister, E. An Integration Instrument for Timewise Evaluation of Emissions. Staub-Reinhalt, Luft, 34(2):53-56, 1974.

105. Nader, J.S., F. Jaye, and W. Conner. Performance Specifications for Stationary-Source Monitoring Systems for Gases and Visible Emissions. EPA-650/2-74-013, U.S. Environmental Protection Agency, Research Triangle Park, North Carolina, 1974. 74 pp.

106. Avetta, E.D. In Stack Transmissometer Evaluation and Application to Particulate Opacity Measurement. EPA-650/2-75-008, U.S. Environmental Protection Agency, Research Triangle Park, North Carolina, 1975. 124 pp.

107. Peterson, C.M. In-Stack Transmissometer Techniques for Measuring Opacities of Particulate Emissions from Stationary Sources. EPA-R2-72-099, U.S. Environmental Protection Agency, Research Triangle Park, North Carolina, 1972. 88 pp.

108. Crocker, B.B. Monitoring Effluent Particulate Emissions by Stack Opacity. Preprint, American Institute of Chemical Engineers, New York, New York, 1974. 15 pp. Presented at the 78th National Meeting of the American Institute of Chemical Engineers, Salt Lake City, Utah, 1974. Paper 46d.

109. Conner, W.D., and J.R. Hodkinson. Optical Properties and Visual Effects of Smoke-Stack Plumes. EPA-AP-30. U.S. Environmental Protection Agency, Washington, D.C., 1972.

110. Ensor, D.S., and M.J. Pilat. The Effect of Particle Size Distribution on Light Transmittance Measurement. American Industrial Hygiene Association Journal, 32(5):287-292, 1971.

111. Cohen, J.J., and D.N. Montan. Theoretical Considerations, Design, and Evaluation of a Cascade Impactor. Amer. Ind. Hyg. Assoc. J., 1976. pp. 95-104.

112. Marple, V.A., and K. Willeke. Impactor Design, Atmos. Environ., 10:891-896, 1976.

113. Mercer, T.T. On the Calibration of Cascade Impactors. Ann. Occup. Hyg., 6:1-17, 1963.

114. Newton, G.J., O.G. Raabe, and B.V. Mokler. Cascade Impactor Design and Performance. J. Aerosol Sci., 8:339-347, 1977.

115. Marple, V.A., and B.Y.H. Liu. Characteristics of Laminar Jet Impactors. Environ. Sci. & Tech., 8(7):648-654, 1974.

116. Rao, A.K., and K.T. Whitby. Nonideal Collection Characteristics of Single Stage and Cascade Impactors. Amer. Ind. Hyg. Assoc. J., 38:174-179, 1977.

117. Cushing, K.M., G.E. Lacey, J.D. McCain, and W.B. Smith. Particulate Sizing Techniques for Control Device Evaluation: Cascade Impactor Calibrations. EPA-600/2-76-280, U.S. Environmental Protection Agency, Research Triangle Park, North Carolina, 1976. 94 pp.

118. Lundgren, D.A. An Aerosol Sampler for Determination of Particle Concentration as a Function of Size and Time. J. Air Pollut. Contr. Assoc., 17(4):225-259, 1967.

119. Ranz, W.E., and J.B. Wong. Impaction of Dust and Smoke Particles. Ind. Eng. Chem., 44(6):1371-1381, 1952.

120. Davies, C.N., and M. Aylward. The Trajectories of Heavy, Solid Particles in a Two-Dimensional Jet of Ideal Fluid Impinging Normally Upon a Plate. Proc. Phys. Soc., 64:889-991, 1951.

121. Marple, V.A. A Fundamental Study of Inertial Impactors. University Microfilms, Ann Arbor, Michigan, 1970. 243 pp.

122. Mercer, T.T., and R.G. Stafford. Impaction from Round Jets. Ann. Occup. Hyg., 12:41-48, 1969.

123. Smith, W.B., and J.D. McCain. Particle Size Measurement in Industrial Flue Gases. In: Air Pollution Control, Part III, Werner Strauss, ed. John Wiley & Sons, New York, New York. (in press)

124. Calvert, S., C. Lake, and R. Parker. Cascade Impactor Calibration Guidelines. EPA-600/2-76-118. U.S. Environmental Protection Agency, Research Triangle Park, North Carolina, 1976. 43 pp.

125. McCain, J.D., K.M. Cushing, and A.N. Bird, Jr. Field Measurements of Particle Size Distribution with Inertial Sizing Devices. EPA-650/2-73-035. U.S. Environmental Protection Agency, Research Triangle Park, North Carolina, 1973. 52 pp.

126. Brink, J.S., Jr., E.D. Kennedy, and H.S. Yu. Particle Size Measurements with Cascade Impactors. In: Proceedings of 65th Annual Meeting, AIChE, New York, New York, 1972.

127. McCain, J.D., L.G. Felix, and J. Johnson. Cascade Impactor Data Reduction System: Procedures Manual. EPA Contract Number 68-02-2131. U.S. Environmental Protection Agency, Research Triangle Park, North Carolina, 1978. (in press)

128. Strauss, W. Industrial Gas Cleaning. Pergamon Press, New York, New York, 1975. 621 pp.

129. Lippmann, M., and T.L. Chan. Calibration of Dual-Inlet Cyclones for "Respirable" Mass Sampling. Amer. Ind. Hyg. Ass. J., 35(4):189-200, 1974.

130. Chan, T., and M. Lippmann. Particle Collection Efficiencies of Air Sampling Cyclones: An Empirical Theory. Environ. Sci. Technol., 11(4):377-382, 1977.

131. Smith, W.B., and R.R. Wilson, Jr. Development and Laboratory Evaluation of a Five-Stage Cyclone System. EPA-600/7-78-008, U.S. Environmental Protection Agency, Research Triangle Park, North Carolina, 1978.

132. Rusanov, A.A. Determination of the Basic Properties of Dusts and Gases in "Ochistka Dymovykh Gasov V Promyshlennoy Energtike". 405-440, 1969.

133. Smith, W.B., K.M. Cushing, G.E. Lacey, and J.D. McCain. Particulate Sizing Techniques for Control Device Evaluation. EPA-650/2-74-102A, U.S. Environmental Protection Agency, Research Triangle Park, North Carolina, 1975. 132 pp.

134. Gooding, C.H. Wind Tunnel Evaluation of Particle Sizing Instruments. EPA-600/2-76-073, U.S. Environmental Protection Agency, Research Triangle Park, North Carolina, 1976. 72 pp.

135. Hamersma, J.W., S. Reynolds, and R.F. Maddalone. Procedures Manual for Level 1 Environmental Assessment. EPA-600/2-76-160A, U.S. Environmental Protection Agency, Research Triangle Park, North Carolina, 1976. 220 pp.

136. Willeke, K., and B.Y.H. Liu. Single Particle Optical Counter: Principle and Application. In: Fine Particles, Aerosol Generation, Measurement, Sampling, and Analysis. Academic Press, B.Y.H. Liu, ed., 1976. pp. 698-725.

137. Smith, W.B., K.M. Cushing, and J.D. McCain. Procedures Manual for Electrostatic Precipitator Evaluation. EPA-600/7-77-059, U.S. Environmental Protection, Research Triangle Park, North Carolina, 1977. 430 pp.

138. Marple, V.A. The Aerodynamic Size Calibration of Optical Particle Counters by Inertial Impactors. Particle Tech. Lab. Pub. 306, presented at Aerosol Measurement Workshop, University of Florida, Gainesville, Florida, 1976. 13 pp.

139. McCain, J.D., K. Cushing, and W. Smith. Methods for Determining Particulate Mass and Size Properties: Laboratory and Field Measurements. J. Air Pollut. Contr. Assoc., 24(12):1172-1176, 1974.

140. Junge, C.E., and E. McLaren. Relationship of Cloud Nuclei Spectra to Aerosol Size Distribution and Composition. J. of Atmos. Sci., 28(3):382-390, 1971.

141. Haberl, J.B., and S.J. Fusco. Condensation Nuclei Counters: Theory and Principles of Operation. Prepared for presentation at the 11th Conference on Methods in Air Pollution and Industrial Hygiene Studies at the University of California, Berkeley, California, sponsored by California Air Resources Board and California Department of Public Health, 1970. 24 pp.

142. Fuchs, N.A., I.B. Stechkina, and V.I. Starosselskii. On the Determination of Particle Size Distribution in Polydisperse Aerosols by the Diffusion Method. Brit. J. Appl. Phys., 16:280-281, 1962.

143. Sinclair, D., R.J. Countess, B.Y.H. Liu, and D.Y.H. Pui. Experimental Verification of Diffusion Battery Theory. J. Air Pollut. Contr. Assoc., 26(7):661-663, 1976.

144. Sinclair, D. A Portable Diffusion Battery: Its Application to Measuring Aerosol Size Characteristics. Amer. Ind. Hyg. Assoc. J., 33(11):729-735, 1972.

145. Sinclair, D., and G. Hoopes. A Novel Form of Diffusion Battery. Amer. Ind. Hyg. Assoc. J., 36(1):39-42, 1975.

146. Breslin, A.J., S.F. Guggenheim, and A.C. George. Compact High-Efficiency Diffusion Batteries. Staub Reinhaltung der Luft, 33(4):187-190, 1973.

147. Twomey, S. The Determination of Aerosol Size Distributions from Diffusional Decay Measurements. J. of Franklin Inst., 275:121-138, 1963.

148. Sansone, E.B., and D.A. Weyel. A Note on the Penetration of a Circular Tube by an Aerosol with a Log-Normal Size Distribution. J. Aerosol Sci., 2:413-415, 1971.

149. Ragland, J.W., W.B. Smith and J.D. McCain. Design, Construct, and Test a Field Usable Prototype System for Sizing Particles Smaller than 0.5 μm Diameter. EPA Contract Number 68-02-2114, U.S. Environmental Protection Agency, Research Triangle Park, North Carolina, 1978.

150. Soderholm, S. Modification of a Commercial Condensation Nuclei Counter for Steady Flow. Atmos. Environ, 10:659-660, 1976.

151. Megaw, W.J., and A.C. Wells. A High Resolution Charge and Mobility Spectrometer for Radioactive Submicrometer Aerosols. J. Physics E., 1013-1016, 1969.

152. Maltoni, G.G., C. Melandri, V. Prodi, G. Tarroni, A. DeZaiacomo, G.F. Bompane, and M. Formignani. An Improved Parallel Plate Mobility Analyzer for Aerosol Particles. J. Aerosol Sci., 4:447-455, 1973.

153. Knutson, E.O. Extended Electric Mobility Method. In: Proceedings of Symposium on Fine Particles, Minneapolis, Minnesota, 1975. pp. 739-762.

154. Markowski, G., and D. Ensor. Development of an In-Stack Impactor/Precipitator for Sizing Submicron Particles. EPRI FP-501, Electric Power Research Institute, Palo Alto, California.

155. Cochet, R., and J. Trillat. Charging of Submicron Particles in Electrically Ionized Fields; Measurement of the Rate of Precipitation in a Uniform Electric Field. Compt. Rend. Acad. Sci., 250:2164-2166, 1960.

156. Whitby, K.T., and W.E. Clark. Electric Aerosol Particle Counting and Size Distribution Measuring System for the 0.015 to 1 Micron Size Range. Tellus, 18:573-586, 1966.

157. Liu, B.Y.H., K.T. Whitby, and D.Y.H. Pui. A Portable Electrical Analyzer for Size Distribution Measurement of Sub-Micron Aerosols. J. Air Pollut. Contr. Assoc., 24(11):1067-1072, 1974.

158. Sem, G.J. Submicron Particle Sizing Experience on a Smoke Stack Using the Electrical Aerosol Size Analyzer. EPA-600/2-77-060, U.S. Environmental Protection Agency, Research Triangle Park, North Carolina, 1975. pp. 276-300.

159. Cadle, R.D. Particle Size Determination. Interscience Publishers, Inc., New York, New York, 1955. 303 pp.

160. Allen, T. Particle Size Measurement. Chapman and Hall Ltd., London, England, 1975. 454 pp.

161. Godridge, A.M., S. Badzioch, and P.G.W. Hawksley. A Particle Size Classifier for Preparing Graded Sub-Sieve Fractions. J. Sci. Instrum. 39:611-613, 1962.

162. Göetz, A., and T. Kallai. Instrumentation for Determining Size and Mass Distribution of Submicron Aerosols. APCA J., 12:479-486, 1962.

163. Göetz, A., H.J.R. Stevenson, and O. Preining. The Design and Performance of the Aerosol Spectrometer. APCA J., 10:378-838, 1960.

164. Gerber, H.E. On the Performance of the Göetz Aerosol Spectrometer. Atmos. Environ., 5:1009-1031, 1971.

165. Stöber, W., and H. Flachsbart. Size-Separating Precipitation of Aerosols in a Spinning Spiral Duct. Environ. Sci. Technol., 3(12):1280-1296, 1969.

166. Swayer, K.F., and W.H. Walton. The "Conifuge" - A Size-Separating Sampling Device for Airborne Particles. J. Sci. Instrum., 27:272-276, 1950.

167. Keith, C.N., and J.C. Derrick. Measurement of the Particle Size Distribution and Concentration of Cigarette Smoke by the "Conifuge". J. Colloid Sci., 14:340-356, 1960.

168. Tillery, M.I. Design and Calibration of a Modified Conifuge. Assessment of Airborne Radioactivity, IAEA, Vienna, 1967.

169. McCrone, W.C., and J.G. Delly. The Particle Atlas, Edition Two. Ann Arbor Science, Ann Arbor, Michigan, 1973. 319 pp.

170. Kaye, B.H. Symposium on Particle Size Analysis Society for Analytical Chemistry, Loughborough, England, 1966.

171. Allen-Bradley Sonic Sifter. U.S. Patent 3,045,817.

172. Stern, S.C., H.W. Zeller, and A.I. Schekman. Collection Efficiency of Jet Impactors at Reduced Pressures. Ind. Eng. Chem. Fundam., 1(4):275-344, 1962.

173. Parker, G.W., and H. Buchholz. Size Classification of Submicron Particles by a Low-Pressure Cascade Impactor. ORNL-4226, Oak Ridge National Laboratory, Oak Ridge, Tennessee, 1968. 64 pp.

174. McFarland, A.R., H.S. Nye, and C.H. Erickson. Development of a Low Pressure Impactor. EPA-650/2-74-014, U.S. Environmental Protection Agency, Research Triangle Park, North Carolina, 1973. 56 pp.

175. Pilat, M.J. Submicron Particle Sampling with Cascade Impactor. In: Proceedings of the 66th Annual Meeting of the Air Pollution Control Association, Chicago, Illinois, 1973. Paper 73-384.

176. Pilat, M.J., G.M. Fioretti, and E.B. Powell. Sizing of 0.02-20 Micron Diameter Particles Emitted from Coal-Fired Power Boiler with Cascade Impactors. Paper presented APCA-PNWIS Meeting, Vancouver, B.C., 1975.

177. Wagman, J., and C.M. Peterson. A Continuous Monitor for Size Distribution of Airborne Particulate Emissions. In: Proceedings of the 3rd International Clean Air Congress, Dusseldorf, Germany, October 8-12, 1973. p. C6-8.

178. Lilienfeld, P., D.P. Anderson, and D.W. Cooper. Design, Development, and Demonstration of a Fine Particulate Measuring Device. EPA-600/2-77-077, U.S. Environmental Protection Agency, Research Triangle Park, North Carolina, 1977.

179. Carpenter, T.E., and D.L. Brenchley. A Piezoelectric Cascade Impactor for Aerosol Monitoring. Amer. Ind. Hyg. Assoc. J., 503-510, 1972.

180. Chuan, R.L. An Active Cascade Impactor for Real Time Sizing of Airborne Particles. Celesco Industries, Inc., Costa Mesa, California, Bulletin AT-149. 3 pp.

181. Hounam, R.F., and R.J. Sherwood. The Cascade Centripeter: A Device for Determining the Concentration and Size Distribution of Aerosols. Ind. Hyg. J., 122-131, 1965.

182. Connor, W.D. An Inertial-Type Particle Separator for Collecting Large Samples. J. Amer. Pollut. Contr. Assoc., 16(1):33-38, 1966.

183. Loo, B.W., and J.M. Jaklevic. An Evaluation of the ERC Virtual Impactor. Lawrence Berkeley Laboratory Report No. LBL-2468, January, 1974.

184. Loos, B.W., J.M. Jaklevic, and F.S. Goulding. Dichotomous Virtual Impactors for Large Scale Monitoring of Airborne Particulate Matter. In: Fine Particles, Aerosol Generation, Measurement, Sampling, and Analysis. Academic Press, B.Y.H. Liu, ed., 1976. pp. 311-350.

185. Schott, J.H., and W.E. Ranz. Jet-Cone Impactors as Aerosol Particle Separators. Environ. Sci. Tech. 10(13):1250-1256, 1976.

186. Luna, R. A Study of Impinging Axi-Symmetric Jets and Their Applications. Dissertation, Univ. Microfilms, Ann Arbor, Michigan, 1965. 117 pp.

187. Brooks, E.F., M.E. Taylor, T.E. Chamberlain, R.J. Golik, and R. Watson. Development Study of a Novel Continuous Flow Impactor, TRW Systems and Energy. Final Report on EPA Contract No. 69-02-2165, U.S. Environmental Protection Agency, Research Triangle Park, North Carolina, 1977. 107 pp.

188. Willeke, K. Size Classification by Opposing Jets. Oral Presentation at Tenth Aerosol Technology Meeting, Los Alamos, New Mexico, September, 1977.

189. Hodkinson, J.R. The Optical Measurement of Aerosols. In: Aerosol Sci., C.N. Davies, ed. Academic Press, New York, New York, 1966. pp. 287-357.

190. Shofner, F.M., G. Kreikebaum, H.W. Schmitt, and B.E. Barnhart. In Situ, Continuous Measurement of Particulate Size Distribution and Mass Concentration Using Electro-Optical Instrumentation. In: Proceedings of Fifth Annual Industrial Air Pollution Control Conference, Knoxville, Tennessee, April, 1975.

191. Gravatt, C.C., Jr. Real Time Measurement of the Size Distribution of Particulate Matter by a Light Scattering Method. J. Air Pollut. Contr. Assoc., 23(12):1035-1038, 1973.

192. Chan, P.W. Optical Measurements of Smoke Particle Size Generated by Electric Arcs. EPA-650/2-74-034, U.S. Environmental Protection Agency, Washington, D.C., 1974. 49 pp.

193. Knollenberg, R. An Active Scattering Aerosol Spectrometer. Atmos. Tech., 2, 1973.

194. Cornillault, J. Particle Size Analyzer. Appl. Opt., 11(2) 256-268, 1972.

195. McSweeney, A. A Diffraction Technique to Measure Size Distribution of Large Airborne Particles. EPA-600/3-76-073, U.S. Environmental Protection Agency, Research Triangle Park, North Carolina, 1976.

196. Wertheimer, A.L., and W.L. Wilcock. Light Scattering Measurements of Particle Distributions. Appl. Opt., 15(6): 1616-1620, 1976.

197. Hotham, G.A. Size of Respirable Aerosols by Pulsing UV Laser Machine. Aerosol Measurement Seminar, Gaithersburg, Maryland, 1974. 55 pp.

198. Simmons, H., and J. Dominic. A High-Speed Spray Analyzer for Gas Turbine Fuel Nozzles. Oral Presentation, ASME Gas Turbine Conference, Session 26, Cleveland, Ohio, March 12, 1969.

199. Mathews, B.J., and R.F. Kemp. Holography of Light Scattered by Particulate in a Large Steam Boiler. 63rd Annual Meeting AIChE, Symposium: Continuous Particulate Monitoring, 1973.

200. Farmer, W.M. Measurement of Particle Size, Number Density, and Velocity Using a Laser Interferometer. App. Opt., 11(11):2603-2612, 1972.

201. Robinson, D.M., and W.P. Chu. Diffraction Analysis of Doppler Signal Characteristics for a Cross-Beam Laser Doppler Velocimeter. App. Opt., 14(9):2177-2183, 1975.

202. Adrian, R.J., and K.L. Orloff. Laser Anemometer Signals: Visibility Characteristics and Application to Particle Sizing. App. Opt., 16(3):677-684, 1977.

203. Roberds, D.W. Particle Sizing Using Laser Interferometry. App. Opt., 16(7):1861-1868, 1977.

204. Wilson, J.C. Aerosol Particle Size Measurement by Laser Doppler Velocimetry. Ph.D. Thesis, University of Minnesota, Minneapolis, Minnesota, 1977.

205. Medecki, H., M. Kaufman, and D.E. Magnus. Design, Development and Field Test of a Droplet Measuring Device. EPA-650/2-75-018, U.S. Environmental Protection Agency, Research Triangle Park, North Carolina, 1975. 56 pp.

206. McFarland, A.R., and R.W. Bertch. Fractionator for Size Classification of Aerosolized Solid Particulate Matter. Environ. Sci. Tech., 11(8):781-784, 1977.

207. McFarland, A.R. Private communication.

GLOSSARY

Aerodynamic diameter, D_A: The diameter of a sphere of unit density which has the same settling velocity in the gas as the particle of interest. See also Stokes diameter.

Aerodynamic impaction diameter, D_{AI}: The aerodynamic impaction diameter of a particle is an indication of the way that a particle behaves in an inertial impactor or in a control device where inertial impaction is the primary mechanism for collection. If the particle Stokes diameter, D_S, is known, the aerodynamic injection diameter is equal to:

$$D_{AI} = D_S \sqrt{\rho_p C} \quad ,$$

where ρ_p is the particle density, gm/cm^3, and

C is the slip correction factor.

See also Stokes diameter.

Aerosol: A suspension of solid or liquid particles in a gas.

Air centrifuge: A laboratory device which uses centrifugal force, created by spinning part of the device, to separate particles larger than a certain aerodynamic diameter from an aerosol.

Blank: A blank usually refers to a controlled cascade impactor test run in which the particles are removed by a prefilter. If the measured impactor stage weights are found to change significantly and consistently, the actual test runs should be corrected for this background.

Bounce: Bounce in this document refers to inadequate retention of particles that strike the impaction surface in cascade impactors. If the particle does not adhere, it is said to bounce. See also Re-entrainment.

Cascade impactor: An instrument which uses impaction to separate particles from an aerosol and deposit them on stages in order of decreasing aerodynamic diameter.

Centrifugal spectrometer: A laboratory device which uses centrifugal force, created by spinning part of the device, to separate and deposit particles from an aerosol in narrow bands that represent discrete intervals of aerodynamic diameter.

Condensation: The coalescence of vapors either into liquid particles in the gas stream or on sampling equipment walls.

Confidence limits: A range of values about an arithmetic mean. If a large number of sets of samples are taken, the parameter being estimated will be within the confidence limits of a specified percentage of the sets.

Conifuge: A centrifugal spectrometer in which the aerosol flows between two coaxial rotating cones, the particles being deposited on the outer cone.

Coulter counter: A particle sizing instrument which measures the change in current flow through a small orifice immersed in an electrolyte as a particle passes through the orifice.

Critical orifice: An orifice through which the air flow rate is kept constant by maintaining sonic velocity.

Cut-point: The cut-point of an impactor stage or cyclone is the particle diameter for which all particles of equal or greater diameter are captured and all particles with smaller diameters are not captured. No real impactor or cyclone actually has a sharp step function cut-point, but the theoretically defined D_{50} of a stage is often called its cut-point.

Cyclone: A device that causes an aerosol to spiral around its walls, thus separating particles by centrifugation, the large particles being deposited on the wall and at one end of the device, and the smaller particles passing out an opening in the other end of the device.

D_{50}: The D_{50} of an impactor stage or cyclone is the particle diameter for which the device is 50 percent efficient. Fifty percent of the particles of that diameter are captured and 50% are passed to the next stage. The theoretical expression for the D_{50} of an impactor stage is

$$D_{50} = \sqrt{\frac{18\ STK\ \mu\ R}{C\ \rho_p\ V_j}}$$

where Stk = Stokes number, determined by calibration for 50% collection efficiency, dimensionless,

μ = gas viscosity, poise,

R = impactor jet radius (for slot impactors, the slot half width), cm,

V_j = gas velocity through impactor jet, cm/sec,

C = Slip correction factor, dimensionless,

ρ_p = particle density, g/cm^3.

D_{50}(AI), aerodynamic impaction diameter, is found by setting C and ρ_p = 1.0.

D_{50}(A), the aerodynamic diameter, is found by setting ρ_p = 1.0, and

D_{50}(S), Stokes diameter, is found by setting ρ_p = the actual particle density.

There is no accurate expression for the D_{50} of a cyclone.

Diffusion: The net movement of gas molecules or particles from a high to a low concentration area due to Browian motion.

Diffusion battery: A device in which a number of small ducts or cells are arranged in parallel so that significant diffusion losses are possible at relatively large sampling flow rates.

DOP: Dioctyl phthalate. An organic fluid of low vapor pressure, frequently used in the generation of aerosols for calibration and testing of air pollution measuring devices.

Electric particle analyzer: An instrument which sizes and collects particles on the basis of their electrical mobility.

Electrostatic precipitator: A device which collects aerosol particles electrically by charging them in a unipolar ion field and then collecting them on a suitable surface by a combination of turbulent transport and a strong electric field.

Elutriation: The process by which particles in a moving stream are separated aerodynamically by the pull of gravity.

Equivalent polystyrene latex (PSL) diameter: The intensity of light scattered by a particle at any given angle is dependent upon the particle size, shape and index of refraction. It is impractical to measure each of these parameters, however, and the theory for light scattered by irregularly shaped particles is not well developed. Sizes based on light scattering by single particles are therefore usually estimated by comparison of the intensity of scattered light from the particle with the intensities due to a series of calibration spheres of precisely known size. Although spinning disc and vibrating orifice aerosol generators can be used to generate monodisperse calibration aerosols of different physical properties, most manufacturers of optical particle sizing instruments use polystyrene latex spheres to calibrate their instruments. It is convenient to define an equivalent PSL diameter as the diameter of a PSL sphere which evokes the same response from a particular optical instrument as the particle of interest.

Equivalent volume diameter: Certain instruments, such as the Coulter Counter, have, as the measured size parameter, the volumes of the individual particles. Size distributions from such techniques are given in terms of the diameters of spheres having the same volume as the particles of interest.

Extinction coefficient: The extinction coefficient of an aerosol is given by the following equation:

$$E = \pi \int_{r_1}^{r_2} r^2 \, Q_E(\alpha, m) \, N(r) \, dr$$

where α = size parameter, $2r\pi/\lambda$

r = particle radius

λ = wavelength of the radiation

m = particle refractive index relative to the gas medium

$N(r)$ = number of size frequency distribution, i.e. the number of particles of radius r per volume per Δr.

Q_E = particle extinction coefficient, defined as the total light flux scattered and absorbed by a particle divided by the light flux incident on the particle.

Extractive sampling: Sampling of a particulate laden process effluent stream by means of a probe inserted inside the process stream duct to allow transport of the gas to some type of sampling instrument located outside the process stream duct.

Geometric mean diameter: The geometric mean diameter is the diameter of a particle which has the logarithmic mean for the size distribution. This can be expressed mathematically as:

$$\log GMD = \frac{\log D_1 + \log D_2 + \ldots + \log D_N}{N} \text{ or as}$$

$$GMD = (D_1 D_2 D_3 \ldots D_N)^{1/N}$$

Geometric standard deviation: A measure of dispersion in a log-normal distribution, given by:

$$\log \sigma_g = \left(\frac{\sum_{j=1}^{N} f_j (\log D_j - \log GMD)^2}{N-1} \right)^{\frac{1}{2}}$$

where σ_g is the geometric standard deviation,

f_j is the relative mass, surface area, or number of particles in the interval,

D_j is the diameter characteristic of the jth interval, and

N is the total number of intervals.

Grease: In impactor terminology, grease is a substance that is placed on an impactor stage or substrate to serve as a particle adhesive.

Horizontal elutriator: A device in which an aerosol passes in laminar flow between two parallel horizontal surfaces and particles are deposited onto the lower surfaces by sedimentation. See also Elutriation.

Impaction: The separation of particles of sufficient inertia from a flowing aerosol onto a surface as the surface deflects the aerosol.

Impinger: A device which causes the separation of particles of sufficient inertia from a flowing aerosol onto a surface under water as the water deflects the aerosol stream.

Index of refraction: The ratio of the velocities of light in two adjacent media as the light passes from one medium to the other. Usually one medium is assumed to be air.

Inertial impaction parameter, Ψ: The inertial impaction parameter is similar to the Stokes number; however, the characteristic dimension of the system is the diameter or width of the jet, not the radius or half width. Thus

$$\Psi = 2\ C\ V_o\ \rho_p\ r^2/9\mu D$$

where V_o is the particle velocity, cm/sec,

ρ_p is the particle density, g/cm^3,

r is the radius of the particle, cm,

C is the slip correction factor,

μ is the gas viscosity, poise, and

D is the diameter or width of the jet, cm.

See also Stokes number.

In situ sampling: Placement of a sampling device directly into a process gas stream in order to sample the particles or gas directly.

Isokinetic sampling: The method of sampling in which the velocity of the aerosol flowing into the sampling inlet equals that of the aerosol flowing past it. See also Stokes number.

Lognormal distribution: A distribution of frequencies which is symmetric or bell shaped when plotted along a logarithmic abcissa.

Mean free path of gas molecules: The average distance that molecules travel between collisions. For practical purposes, the mean free path is given with sufficient accuracy by the following equation:

$$\lambda = \frac{2\mu}{1.01 \times 10^6 P} \left(\frac{8.3 \times 10^7 T}{3\ MM} \right)^{\frac{1}{2}}$$

where μ is the viscosity of the gas, poise,

P is the pressure of the gas, atm,

T is the temperature, °Kelvin, and

MM is the mean molecular weight.

Mean of a distribution: The term "mean" is used to denote the arithmetic mean, or average, of a distribution. In a particle size distribution the mass mean diameter is the diameter of a particle which has the average mass for the entire particle distribution.

Median of a distribution: The median divides the area under a frequency curve in half. For example, the mass median diameter (MMD) of a particle size distribution is the size at which 50% of the mass consists of particles of larger diameter, and 50% of the mass consists of particles having smaller diameters.

Mode of a distribution: The mode represents the diameter which occurs most commonly in a particle size distribution. The mode is seldom used as a descriptive term in aerosol physics.

Monodisperse aerosol: An aerosol in which all the particles are the same size.

Normal distribution: A distribution of frequencies which is symmetric or bell shaped when plotted along a linear abscissa. Also called a Gaussian distribution.

Particle mobility: The ratio of the velocity of a particle to the force causing steady motion is called the mobility, b.

$$b = \frac{C}{3\pi\mu D} ,$$

where μ is the gas viscosity, poise,

D is the particle diameter, cm, and

C is the slip correction factor.

The electric mobility of a particle is given by:

$$b = \frac{qC}{3\pi\mu D}$$

where q is the electric charge on the particle.

Particle size distribution: A mathematical relationship expressing the relative amount of particles in an incremental range of sizes.

Particle stopping distance, ℓ: The distance travelled by a particle as it accelerates from some initial velocity to the velocity of the gas stream.

$$\ell = \tau V$$

where τ is the relaxation time (sec), and

V is the velocity of the gas stream (cm/sec).

Polydisperse aerosol (heterodisperse): An aerosol containing particles of many sizes.

Preconditioning: Unwanted weight changes of impactor glass fiber collection substrates may be reduced by placing a batch of substrates inside the duct to be sampled, and pumping or passing filtered flue gas through them for several hours. Such a procedure is referred to as "preconditioning" the substrates.

Precutter or precollector: A collection device, often a cyclone, which is put ahead of the impactor in order to reduce the first stage loading. This is necessary because in some streams the high loading of large particulate would overload the first stage before an acceptable sample had been gathered on the last stages.

Probe: A pipe used for the transport of process effluent gas from the interior of the process ducting to a sampling instrument. Usually probes are insulated and heat traced and have some type of nozzle attachment at the end to be inserted in the gas stream for isokinetic sampling. In the case of in situ sampling, the probe is used to connect the sampling instrument inside the duct to accessory equipment outside the duct. If there is no accessory equipment, the probe is used as a handle for inserting, transversing, securing, and removing the sampling instrument.

Process stream: Any particulate laden gaseous effluent that is an end product of a manufacturing or energy conversion process.

Real-time monitor: Any sampling instrument which processes data and gives an instantaneous display of information concerning the process stream effluent under consideration.

Rebound: See Bounce.

Re-entrainment: The re-entrance of formerly collected particles into the aerosol stream.

Relaxation time, τ: The time required for a particle to accelerate from some initial velocity to the velocity of the carrier gas.

$$\tau = \frac{2\rho_p r^2 C}{9}$$

where ρ_p is the particle density, g/cm^3,

r is the particle radius, cm,

C is the slip correction factor, and

μ is the gas viscosity, poise.

Resistivity: The resistivity of a conductor is defined as the ratio of the potential gradient across the conductor to the current per unit cross-sectional area. The resistivity of dusts is very important in the efficient operation of an electrostatic precipitator used as a pollution control device.

Reynolds number: A dimensionless parameter defined as

$$R = \frac{\rho v D}{\mu}$$

where ρ = fluid density

V = fluid velocity

μ = fluid viscosity, and

D = some characteristic dimension of the fluid flow system

Generally, a Reynolds number less than 2000 indicates laminar flow, greater than 4000 indicates turbulent flow, and 2000-4000 is a transition region in which the flow can be laminar or turbulent.

Sampling train: The components of a system used to remove or sample dusts from process streams. A basic particulate mass sampling train would consist of a nozzle, a probe, a filter, one or more devices for monitoring gas flow, and a pump. Pitot tubes and thermocouples, used to monitor the gas velocity and temperature, are generally regarded as part of a sampling train.

Slip correction factor: A correction to Stokes' law made necessary by the existence of a finite net gas velocity at a particle surface. Stokes' law can be applied to submicron particles if a slip correction factor, C, is used.

$$C = 1 + \frac{2\lambda}{D}\left[1.23 + 0.41 \exp\left(\frac{-0.44D}{\lambda}\right)\right],$$

where λ is the mean free path of the gas molecules, μm, and

D is the particle diameter, μm.

The constants in this equation were determined empirically for air at standard temperature and pressure, and are thus only approximate for stack conditions. If the exponential term is neglected, the equation is referred to as the Cunningham correction factor.

Stage: A stage of an impactor is usually considered to be the accelerating jet (or plate containing multiple jets) and the surface on which the accelerated particles impact.

Stokes diameter, D_S: The diameter of a sphere having the same density and which behaves the same aerodynamically as the particle of interest. For spherical particles, the Stokes diameter is equal to the diameter of the particle.

Stokes number, Stk: The ratio of the particle stopping distance to some characteristic dimension of the sampling system. For example, if the stopping distance for particles of a given diameter is much smaller than the radius of a sampling nozzle, (Stk << 1) the particles will be sampled accurately in spite of flow disturbances due to the nozzle design or sampling velocity. If the particle stopping distance is comparable in magnitude to the nozzle diameter, however, the particles may cross flow streamlines and either enter or miss the nozzle in quantities which are not proportional to the particle concentration in the duct. Thus, for Stk on the order of 0.1 or greater, isokinetic sampling is required. (See isokinetic sampling.) In impaction theory, the characteristic dimension of the system is the radius or half width of the jet, R. Thus,

$$Stk = \frac{2\rho_p r^2 C V_0}{9\mu R}$$

where V_0 is the particle velocity, cm/sec,

ρ_p is the particle density, g/cm^3,

r is the radius of the particle, cm,

C is the slip correction factor,

μ is the gas viscosity, poise, and

R is the radius or half width of the jet, cm.

If the particle diameter D_p is substituted, this equation becomes

$$Stk = \frac{\rho_p D_p^2 CV_0}{18 \mu R}$$

See also Inertial impaction parameter.

Substrate: The removable, often disposable, surface on which impacted particles are collected. Substrates are characteristically light and can be weighed on a microbalance.

Temperature and Pressure Standards: Laboratory standard conditions have generally been recognized for many years as 0°C and 760 mm Hg. Recently the US EPA has set standard conditions for all stationary source testing to be 20°C and 760 mm Hg. Engineering standards have been defined for some time and are 70°F and 29.92 in. Hg. In order to avoid confusion, the designation "normal", (N), is used to denote engineering standard conditions in metric units (21°C, 760 mm Hg).

When denoting measures of gas volume, the letter "d", or "D", (for "dry") is sometimes included to signify that the volume measured contains no water vapor. In stationary source testing, the letter "a", or "A", (for "actual") signifies the volume of the gas at the actual stack conditions, for example, the volume the gas would have at 200°C, 740 mm Hg, and 10% H_2O.

Examples of stationary source testing nomenclature:

s.d.c.f. (or DSCF or SDCF)--standard dry cubic feet--a gas volume measured at 20°C, 760 mm Hg, and 0% H_2O.
a.c.f. (or ACF)--actual cubic feet--a gas volume measured at conditions other than standard, usually given in the text.

ACM (or Am^3)--actual cubic meters
ACCM (or Acm^3)--actual cubic centimeters
DNCM (or DNm^3)--dry normal cubic meters--a gas volume measured at 21°C, 760 mm Hg, and 0% H_2O.

Traverse: A systematic sampling from various points inside a process effluent duct in order to obtain a representative sample. The number and position of the traverse points is dependent on the size and shape of the ducting at the sampling location.

BIBLIOGRAPHY

A literature search was made for articles, reports, and books pertaining to particulate sampling from industrial process streams with an emphasis on control device evaluation covering, in general, the past two years. The bibliography was planned to be a supplement to the list of references, naming some of the most recent publications and also those "classic" publications which are most often cited by recent authors. The search included a subject search of the Engineering Index, 1974-1976; Chemical Abstracts, 1976-1977; Air Pollution Abstracts, July, 1974 - July 1976; The EPA Publications Bibliography, January-September, 1977; and other indices to a lesser extent.

An extensive search was made of the references in the Environmental Engineering Library of Southern Research Institute, which contained a major portion of the references listed in the bibliography. Publications over three years old were generally not included unless they contained information that was not found or not superceded in recent papers. The list of references cited in Sections II - IV of the manual are not necessarily duplicated in the bibliography; however, they should be consulted first for information on particulate measurement.

The formats of the references generally fall into four main groups:

1. Reports on government contracts: author(s), title, performing organization or company, sponsoring government agency, address of government agency, year of publication,

number of pages, government report number (when applicable or available), and National Technical Information Service number (when applicable or available).

2. Books: author(s), title, publisher, publisher's address, year of publication, and number of pages.

3. Journal articles: author(s), title, name of journal, volume number, issue number (if applicable), page numbers, and year of publication.

4. Papers and proceedings of technical meetings: author(s), title, name, location, and year of meeting, page numbers or paper number (when applicable).

Contents of the bibliography are arranged alphabetically by author under the following headings:

1. General References
2. Sample Extraction
3. Filter Media
4. Mass Concentration
5. Particle Size Distribution
6. Opacity - Transmissometers - Nephelometers
7. Analytical Technique
8. Control Device Evaluation - Field Tests.

1. GENERAL REFERENCES

AMERICAN SOCIETY FOR TESTING & MATERIALS
ANNUAL BOOK OF ASTM STANDARDS, STANDARD FOR METRIC PRACTICE
ASTM, PHILADELPHIA, PA., PP. 480-516, 1976

ATOMIC ENERGY COMMISSION
HANDBOOK ON AEROSOLS
US GOVERNMENT PRINTING OFFICE, WASHINGTON, D. C., 1950,
147 PP.

BILLINGS, C. E., AND J. WILDER
HANDBOOK OF FABRIC FILTER TECHNOLOGY, VOL. 1, FABRIC FILTER
SYSTEMS STUDY
GCA CORP, NAPC, WASHINGTON, D. C., 1970, 648 PP.
APTD-0690 PB 200 648

CADLE, R. D.
PARTICLE SIZE DETERMINATION
INTERSCIENCE PUBLISHERS, INC., NEW YORK, 1955, 303 PP.

CALVERT, S., AND R. PARKER
EFFECTS OF TEMPERATURE AND PRESSURE ON PARTICLE COLLECTION
MECHANISMS; THEORETICAL REVIEW
INDUSTRIAL ENVIRONMENTAL RES. LAB., EPA, RESEARCH TRIANGLE
PARK, N. C., 1977, 96 PP.
EPA-600/7-77-002

CALVERT, S., J. GOLDSCHMID, D. LEITH, AND D. MEHTA
WET SCRUBBER SYSTEM STUDY, VOL. I, SCRUBBER HANDBOOK
A.P.T., INC., EPA, RESEARCH TRIANGLE PARK, N.C., 1972, 828 PP
EPA-R2-72-118A PB 213 016

CALVERT, S., J. GOLDSHMID, D. LEITH, AND D. MEHTA
WET SCRUBBER SYSTEM STUDY VOLUME II FINAL REPORT AND BIBLIOGRAPHY
A.P.T., INC., EPA, RESEARCH TRIANGLE PARK, N.C., 1975, 181 PP
EPA-R2-72-118B PB 213 017

CARVER, L. D.
PARTICLE SIZE ANALYSIS
INDUSTRIAL RESEARCH, PP. 40-43, 1971

CASSATT, W. A., AND R. S. MADDOCK, EDITORS
AEROSOL MEASUREMENTS
SEMINAR ON AEROSOL MEASUREMENTS, NATIONAL BUREAU OF
STANDARDS, WASHINGTON, D. C., 1974, 412 PP.

CHYLEK, P., G. W. GRAMS, AND R. G. PINNICK
LIGHT SCATTERING BY IRREGULAR RANDOMLY ORIENTED PARTICLES
SCIENCE, 193, PP. 480-482, 1976

CUSHING, K. M., W. E. FARTHING, L. G. FELIX, J. D. MCCAIN,
AND W. B. SMITH
PARTICULATE SAMPLING SUPPORT: 1977 ANNUAL REPORT
SOUTHERN RESEARCH INSTITUTE, EPA, RESEARCH TRIANGLE PARK,
N.C., 1978, 174 PP.
EPA-600/7-78-009

DAVIES, C. N., EDITOR
AEROSOL SCIENCE
ACADEMIC PRESS, NEW YORK, 1966, 468 PP.

DAVIES, R.
PARTICLE SIZE ANALYSIS
IND. AND ENG. CHEM., 62 (12), PP. 87-93, 1970

DENNIS, R., AND J. WILDER
FABRIC FILTER CLEANING STUDIES
GCA/TECH., EPA, RESEARCH TRIANGLE PARK, N. C., 1975, 438 PP.
EPA-650/2-75-009 PB 240 372

ELLISON, A. H.
PROGRESS IN INSTRUMENTATION AND TECHNIQUES FOR MEASUREMENT
OF AIR POLLUTANTS
OFFICE OF R&D, EPA, WASHINGTON, D. C., 1974, 22 PP.
EPA-650/2-74-015 PB 231 568

FUCHS, N. A.
THE MECHANICS OF AEROSOLS
THE MACMILLAN CO., NEW YORK, 1964, 408 PP.

GCA CORP
APPENDICES TO HANDBOOK OF FABRIC FILTER TECHNOLOGY, VOL. II
GCA CORP. FOR NAPC ADMIN, U.S. DEPT. HEW, 1970, 208 PP.
PB 200 649

GCA CORP
BIBLIOGRAPHY, VOL. III, FABRIC FILTER SYSTEMS STUDY
GCA CORP. FOR NAPC ADMIN., U.S. DEPT. HEW, 1970, 179 PP.
PB 200 650

GOETZ, A., AND T. KALLAI
INSTRUMENTATION FOR DETERMINING SIZE- AND MASS-DISTRIBUTION
OF SUBMICRON AEROSOLS
J. APCA, 12 (10), PP. 479-486, 1962

GREEN, H. L., AND W. R. LANE
PARTICULATE CLOUDS: DUSTS, SMOKES AND MISTS
D. VAN NOSTRAND CO., INC., PRINCETON, 1964, 471 PP.

HELLER, W., AND M. NAKAGAKI
THEORETICAL INVESTIGATIONS ON THE LIGHT SCATTERING OF SPHERES.
XVII. ANGULAR & SPECTRAL LOCATION OF INTENSITY MAXIMA & MINIMA
J. OF CHEM. PHYSICS, 64 (12), PP. 4912-4920, 1976

IRANI, R. R., AND C. F. CALLIS
PARTICLE SIZE: MEASUREMENT, INTERPRETATION, AND APPLICATION
JOHN WILEY & SONS., INC., NEW YORK, 1963, 165 PP.

KATZ, J.
INFORMATION REQUIRED FOR THE SELECTION AND APPLICATION OF
ELECTROSTATIC PRECIPITATORS FOR THE COLLECTION OF DRY PARTICULA
J. OF APCA, 25 (4), PP. 362-368, 1975

LAPPLE, C. E.
FLUID AND PARTICLE MECHANICS
UNIVERSITY OF DELAWARE, NEWARK, 1956, 353 PP.

LIU, B. Y. H., EDITOR
PROCEEDINGS: SYMPOSIUM ON FINE PARTICLES, MINNEAPOLIS,
MINN. 1975
PARTICLE TECH. LAB., EPA, RESEARCH TRIANGLE PARK, N.C.,
815 PP., 1975
EPA-600/2-75-059 PB 249 514

LOWE, H. J., AND D. H. LUCAS
THE PHYSICS OF ELECTROSTATIC PRECIPITATION
BRITISH J. OF APPL. PHY., 24, SUPPLE 2, PP. 540-547, 1953

MERCER, T. T.
AEROSOL TECHNOLOGY IN HAZARD EVALUATION
ACADEMIC PRESS, NEW YORK, N. Y., 394 PP., 1973

MORROW, N. L., R. S. BRIEF, AND R. R. BERTRAND
AIR SAMPLING AND ANALYSIS
CHEM. ENG/DESKBOOK ISSUE, PP. 125-132, 1972

OGLESBY, S., JR., AND G. B. NICHOLS
A MANUAL OF ELECTROSTATIC PRECIPITATOR TECHNOLOGY
SOUTHERN RESEARCH INSTITUTE, NAPCA, CINCINNATI, OHIO
1970, 875 PP.
PB 196 380

PETERS, E. T., J. E. OBERHOLTZER, AND J. R. VALENTINE
DEVELOPMENT OF METHODS FOR SAMPLING AND ANALYSIS OF PARTICULATE AND GASEOUS FLUORIDES FROM STATIONARY SOURCES
ARTHUR D. LITTLE, EPA, DURHAM, N. C., 1972, 129 PP.
EPA-R2-72-126 PB 213 313

RAGLAND, J. W., K. M. CUSHING, J. D. MCCAIN, AND W. B. SMITH
HP-25 PROGRAMMABLE POCKET CALCULATOR APPLIED TO AIR POLLUTION MEASUREMENT STUDIES: STATIONARY SOURCES
SOUTHERN RESEARCH INSTITUTE, EPA, RESEARCH TRIANGLE PARK, N. C., 1977, 127 PP.
EPA-600/7-77-058

RAGLAND, J. W., K. M. CUSHING, J. D. MCCAIN, AND W. B. SMITH
HP-65 PROGRAMMABLE POCKET CALCULATOR APPLIED TO AIR POLLUTION MEASUREMENT STUDIES: STATIONARY SOURCES
SOUTHERN RESEARCH INSTITUTE, EPA, RESEARCH TRIANGLE PARK, N. C., 1976, 122 PP.
EPA-600/8-76-002

RAO, A. K.
PARTICULATE REMOVAL FROM GAS STREAMS AT HIGH TEMPERATURE/HIGH PRESSURE
MIDWEST RESEARCH INST., EPA, RESEARCH TRIANGLE PARK, N. C., 83 PP., 1975
EPA-600/2-75-020 PB 245 858

SEM, G. J.
STATE OF THE ART: 1971 INSTRUMENTATION FOR MEASUREMENT OF PARTICULATE EMISSIONS FROM COMBUSTION SOURCES. VOLUME I
THERMO-SYSTEMS, INC., EPA, RESEARCH TRIANGLE PARK, N.C. 1971, 194 PP.
PB 202 665

SEM, G. J.
STATE OF THE ART: 1971 INSTRUMENTATION FOR MEASUREMENT OF PARTICULATE EMISSIONS FROM COMBUSTION SOURCES. VOLUME II
THERMO-SYSTEMS, INC., EPA, RESEARCH TRIANGLE PARK, N.C., 1971 225 PP.
PB 202 666

SEM, G. J.
STATE OF THE ART: 1971 INSTRUMENTATION FOR MEASUREMENT OF PARTICULATE EMISSIONS FROM COMBUSTION SOURCES. VOLUME III
THERMO-SYSTEMS, INC., EPA, RESEARCH TRIANGLE PARK, N. C. 1972, 84 PP.
PB 233 393

SMITH, W. B., AND R. R. WILSON, JR.
DEVELOPMENT AND LABORATORY EVALUATION OF A FIVE-STAGE CYCLONE SYSTEM
SOUTHERN RESEARCH INSTITUTE, EPA, RESEARCH TRIANGLE PARK, N.C., 1978, 66 PP.
EPA-600/7-78-008

SMITH, W. B., K. M. CUSHING, AND J. D. MCCAIN
PROCEDURES MANUAL FOR ELECTROSTATIC PRECIPITATOR EVALUATION
SOUTHERN RESEARCH INSTITUTE, EPA, RESEARCH TRIANGLE PARK, N. C., 1977. 430 PP.
EPA-600/7-77-059

SOUTHERN RESEARCH INSTITUTE
PROCEEDINGS OF THE WORKSHOP ON SAMPLING, ANALYSIS, AND MONITORING OF STACK EMISSIONS
SOUTHERN RESEARCH INSTITUTE, ELECTRIC POWER RESEARCH INST., PALO ALTO, CALIFORNIA, 1975. 346 PP.

WEITZMAN, L., AND J. C. REED
REVIEW OF PARTICULATE STACK TEST REPORTS
67TH ANNUAL MEETING, APCA, DENVER, COLO., 1974, PAPER 74-194

WHITE, H. J.
ELECTROSTATIC PRECIPITATION OF FLY ASH. PART I.
J. OF APCA, 27 (1), PP. 15-21, 1977

WHITE, H. J.
ELECTROSTATIC PRECIPITATION OF FLY ASH. PART II.
J. OF APCA, 27 (2), PP. 114-120, 1977

WHITE, H. J.
ELECTROSTATIC PRECIPITATION OF FLY ASH. PART III.
J. OF APCA, 27 (3), PP. 206-217, 1977

WHITE, H. J.
ELECTROSTATIC PRECIPITATION OF FLY ASH, PART IV
J. OF APCA, 27 (4), PP. 308-318, 1977

WHITE, H. J.
INDUSTRIAL ELECTROSTATIC PRECIPITATION
ADDISON-WESLEY PUBLISHING CO., INC., READING, 1963, 376 PP.

2. SAMPLE EXTRACTION

AGARWAL, J. K.
AEROSOL SAMPLING AND TRANSPORT
UNIVERSITY OF MINNESOTA, THESIS, 1975, 175 PP.

BROOKS, E. F., AND R. L. WILLIAMS
FLOW AND GAS SAMPLING MANUAL
TRW SYSTEMS GROUP, EPA, RESEARCH TRIANGLE PARK, N.C., 1976
100 PP.
EPA-600/2-76-203 PB 258 080

FUCHS, N. A.
REVIEW PAPERS: SAMPLING OF AEROSOLS
ATMOS. ENVIRON., 9, PP. 697-707, 1975

HAMIL, H. F., D. E. CAMANN, AND R. E. THOMAS
THE COLLABORATIVE STUDY OF EPA METHODS 5, 6, AND 7 IN FOSSIL FUEL
FIRED STEAM GENERATORS - FINAL REPORT
SOUTHWEST RESEARCH INSTITUTE, EPA, RESEARCH TRIANGLE PARK,
N.C., 1974, 39 PP.
EPA-650/4-74-013 PB 237 695

HANSON, H. A., R. J. DAVINI, J. K. MORGAN, AND A. A. IVERSEN
PARTICULATE SAMPLING STRATEGIES FOR LARGE POWER PLANTS INCLUDING
NONUNIFORM FLOW
FLUIDYNE ENGINEERING CORP., EPA, RESEARCH TRIANGLE PARK,
N. C., 1976. 371 PP.
EPA-600/2-76-170 PB 257 090

LELAND, B. J., J. L. HALL, A. W. JOENSEN, AND J. M. CARROLL
CORRECTION OF S-TYPE PITOT-STATIC TUBE COEFFICIENTS WHEN USED FOR ISOKINETIC SAMPLING FROM STATIONARY SOURCES
ENVIRON. SCI. & TECH., 11 (7), PP. 694-700, 1977

LOGAN, T. J., R. M. FELDER, AND J. K. FERRELL
EXPERIMENTAL INVESTIGATION OF ISOKINETIC AND ANISOKINETIC SAMPLING OF PARTICULATES IN STACK GASES
65TH ANNUAL MEETING AICHE, NEW YORK, N.Y., 1972, 25 PP.

LUNDGREN, D., AND S. CALVERT
AEROSOL SAMPLING WITH A SIDE PORT PROBE
AMER. IND. HYG. ASSOC. J., PP. 208-215, 1967

SEHMEL, G. A.
VALIDITY OF AIR SAMPLES AS AFFECTED BY ANISOKINETIC SAMPLING AND DEPOSITION WITHIN SAMPLING LINE
AEA SYMP. INSTRUMENTS & TECHNIQUES FOR ASSESSMENT OF AIRBORNE RADIO ACTIVITY IN NUCLEAR OPERATIONS, VIENNA, 1967, PP. 727-734

SELDEN, M. G., JR.
ESTIMATES OF ERRORS IN ANISOKINETIC SAMPLING OF PARTICULATE MATTER
J. OF APCA NOTEBOOK, 27 (3), PP. 235-236, 1977

SEM, G. J.
STATE OF THE ART: 1971 INSTRUMENTATION FOR MEASUREMENT OF PARTICULATE EMISSIONS FROM COMBUSTION SOURCES. VOLUME I
THERMO-SYSTEMS, INC., EPA, RESEARCH TRIANGLE PARK, N.C.
1971, 194 PP.
PB 202 665

SEM, G. J.
STATE OF THE ART: 1971 INSTRUMENTATION FOR MEASUREMENT OF PARTICULATE EMISSIONS FROM COMBUSTION SOURCES. VOLUME II
THERMO-SYSTEMS, INC., EPA, RESEARCH TRIANGLE PARK, N.C., 1971
225 PP.
PB 202 666

SMITH, F. H.
THE EFFECTS OF NOZZLE DESIGN AND SAMPLING TECHNIQUES ON AEROSOL MEASUREMENTS
ARO, INC., EPA, RESEARCH TRIANGLE PARK, N. C., 1974, 89 PP.
EPA-650/2-74-070 PB 243 588

VITOLS, V.
THEORETICAL LIMITS OF ERRORS DUE TO ANISOKINETIC SAMPLING OF PARTICULATE MATTER
J. OF APCA, 16 (2), PP. 79-84, 1966

WALLIN, S. C.
SAMPLING OF PARTICULATES EMITTED FROM STATIONARY SOURCES
ANN. OCCUP. HYG., 16 (4), 353-371, 1973

WATSON, H. H.
ERRORS DUE TO ANISOKINETIC SAMPLING OF AEROSOLS
AMER. IND. HYG. ASSOC. QUARTERLY 15 (1), 1954

3. FILTER MEDIA

ADAMS, J., A. BENSON, AND E. PETERS
PROPERTIES OF VARIOUS FILTER MEDIA SUGGESTED FOR IN-STACK SAMPLING
ARTHUR D. LITTLE, INC., NEW YORK, N. Y., 1974, 20 PP.

BENSON, A. L., P. L. LEVINS, A. A. MASSUCCO, AND J. R. VALENTINE
DEVELOPMENT OF A HIGH-PURITY FILTER FOR HIGH TEMPERATURE PARTICULATE SAMPLING AND ANALYSIS
ARTHUR D. LITTLE, INC., EPA, WASHINGTON, D. C., 1973, 80 PP.
EPA-650/2-70-032 PB 230 886

FELIX, L. G., G. I. CLINARD, G. E. LACEY, AND J. D. MCCAIN
INERTIAL CASCADE IMPACTOR SUBSTRATE MEDIA FOR FLUE GAS SAMPLING
SOUTHERN RESEARCH INSTITUTE, EPA, RESEARCH TRIANGLE PARK, N. C., 1977, 89 PP.
EPA-600/7-77-060

FORREST, J., AND L. NEWMAN
SAMPLING AND ANALYSIS OF ATMOSPHERIC SULFUR COMPOUNDS FOR ISOTOPE RATIO STUDIES
ATMOS. ENVIRON., 7, PP. 561-573, 1973

GELMAN, C., AND J. C. MARSHALL
HIGH PURITY FIBROUS AIR SAMPLING MEDIA
ANNUAL MEETING, AMER. IND. HYG. ASSOC., MIAMI, FLA, 1975
PP. 512-517

HEMEON ASSOCIATES
ON THE FILTRATION EFFICIENCY OF ALUNDUM THIMBLES AND OTHER SAMPLING FILTERS
HEMEON ASSOC., PITTSBURGH, PA., 1973, 8 PP.

LIU, B. Y. H., AND K. W. LEE
EFFICIENCY OF MEMBRANE AND NUCLEPORE FILTERS FOR SUBMICROMETER AEROSOLS
ENVIRON. SCI. AND TECH., 10 (4), PP. 345-350, 1976

LUNDGREN, D. A., AND K. T. WHITBY
EFFECT OF PARTICLE ELECTROSTATIC CHARGE ON FILTRATION BY FIBROUS FILTERS
I&EC PROCESS DESIGN & DEVELOPMENT, 4 (4), PP. 345-349, 1965

LUNDGREN, D. A., AND T. C. GUNDERSON
FILTRATION CHARACTERISTICS OF GLASS FIBER FILTER MEDIA AT ELEVATED TEMPERATURES
UNIV. OF FLA., EPA, RESEARCH TRIANGLE PARK, N. C., 1976. 95 PP.
EPA-600/2-76-192 PB 257 132

LUNDGREN, D. A., AND T. C. GUNDERSON
EFFICIENCY AND LOADING CHARACTERISTICS OF EPA'S HIGH-TEMPERATURE QUARTZ FIBER FILTER MEDIA
AMER. IND. HYG. ASSOC. J. 36 (12), PP. 866-872, 1975

NEUSTADTER, H. E., S. M. SIDK, AND R. B. KING
THE USE OF WHATMAN-41 FILTERS FOR HIGH VOLUME AIR SAMPLING
ATMOS. ENVIRON. 9 (1), PP. 101-109, 1975

4. MASS CONCENTRATION

BEUTNER, H. P.
MEASUREMENT OF OPACITY AND PARTICULATE EMISSIONS WITH AN ON-STACK TRANSMISSOMETER
J. OF APCA, 24 (9), PP. 865-871, 1974

BLANN, D. R.
MEASUREMENT METHODS AT HIGH TEMPERATURE AND PRESSURE
SYMP. PARTICULATE CONTROL IN ENERGY PROCESSES, SAN FRANCISCO, CALIF., 1974, 25 PP.

BOUBEL, R. W., AND B. SANDRI
PARTICULATE SAMPLING HAS GONE AUTOMATIC
68TH ANNUAL MEETING, APCA, BOSTON, MASS., 1975
PAPER 75-24.2

BRENCHLEY, D. L., C. D. TURLEY, AND R. F. YARMAC
USE OF THE EPA PARTICULATE TRAIN FOR COMPLIANCE TESTING
AIR POLLUT. CONTROL & INDUST. ENERGY PRODUCTION, CHAP. 4,
ANN ARBOR SCIENCE PUB., ANN ARBOR, MICH., 1975, PP. 73-85

BREUER, H., J. GEBHART, K. ROBOCK, AND U. TEICHERT
PHOTOELECTRIC MEASURING APPARATUS FOR DETERMINATION OF THE
FINE DUST CONCENTRATION
STAUB REINHALTUNG DER LUFT, IN ENGLISH, 33 (4)
PP. 187-190, 1973

CHUAN, R. L.
APPLICATION OF AN OSCILLATING QUARTZ CRYSTAL TO MEASURE THE
MASS OF SUSPENDED PARTICULATE MATTER
165TH NAT. MEETING AM. CHEM. SOC., 1973, DALLAS, TEXAS
1973, 30 PP.

CHUAN, R. L.
AN INSTRUMENT FOR THE DIRECT MEASUREMENT OF PARTICULATE MASS
AEROSOL SCI., 1, PP. 111-114, 1970

CHUAN, R. L.
PARTICULATE MASS MEASUREMENT BY PIEZOELECTRIC CRYSTAL
PROCEEDINGS-SEMINAR ON AEROSOL MEASUREMENT, NAT'L BUR. OF
STANDARDS, WASHINGTON, D. C., 1974, PP. 137-145

CHUAN, R. L.
RAPID ASSESSMENT OF PARTICULATE MASS CONCENTRATION IN THE
ATMOSPHERE WITH A PIEZOELECTRIC INSTRUMENT
ADV. INSTRUMENT. 30 (PT. 2) ISA ANN. CONF., 1975, PAPER 620

CLARKE, A. G., M. A. MOGHADASSI, AND A. WILLIAMS
A COMPARISON OF TECHNIQUES FOR AUTOMATIC AEROSOL MASS CONCENTRA-
TION MEASUREMENT
J. AEROSOL SCI., 8, PP. 73-81, 1977

CONNER, W. D.
MEASUREMENT OF THE OPACITY AND MASS CONCENTRATION OF
PARTICULATE EMISSIONS BY TRANSMISSOMETRY
EPA, RESEARCH TRIANGLE PARK, N. C., 1974, 39 PP.
EPA-650/2-74-128 PB 241 251

DALEY, P. S., AND D. A. LUNDGREN
THE PERFORMANCE OF PIEZOELECTRIC CRYSTAL SENSORS USED TO DETERMINE AEROSOL MASS CONCENTRATIONS
AMER. IND. HYG. ASSOC. J., PP. 518-532, 1975

DOBBINS, R. A., AND G. S. JIZMAGIAN
OPTICAL SCATTERING CROSS SECTIONS FOR POLYDISPERSIONS OF DIELECTRIC SPHERES
J. OPT. SOC. AMER., 56 (13), PP. 1345-1350, 1966

DOBBINS, R. A., AND G. S. JIZMAGIAN
PARTICLE SIZE MEASUREMENTS BASED ON USE OF MEAN SCATTERING CROSS SECTIONS
J. OPT. SOC. OF AMER. 56 (10), PP. 1351-1354, 1966

DORSEY, J. A., AND D. B. HARRIS
THE PRESENT STATUS OF PARTICULATE MASS MEASUREMENTS
SYMPOSIUM: CONTROL OF FINE-PARTICULATE EMISSIONS FROM INDUSTRIAL SOURCES, U.S.-U.S.S.R. WORKING GROUP, SAN FRANCISCO, CALIF., 1974, PAPER 26

DORSEY, J. A., AND J. O. BURCKLE
CONTINUOUS PARTICULATE MONITORING
63RD ANNUAL MEETING, AICHE, CHICAGO, ILL., 1970, PAPER 5A

FUNKHOUSER, J. T.
MANUAL METHODS FOR SAMPLING AND ANALYSIS OF PARTICULATE EMISSIONS FROM MUNICIPAL INCINERATORS
ARTHUR C. LITTLE, CO., EPA, WASHINGTON, D. C., 1973, 293 PP.
EPA-650/2-73-023 PB 238 476

GRUBER, ARNOLD H.
IN-STACK CONTINUOUS PARTICULATE MONITORING USING THE CHARGE TRANSFER PROCESS
APCA SPECIALTY CONFERENCE: CONTINUOUS MONITORING OF STATIONARY AIR POLLUTION SOURCES, ST. LOUIS, MISSOURI, 1975, 20 PP.

GRUBER, A. H., AND E. K. BASTRESS
APPLICATION OF THE TRIBOELECTRIC EFFECT TO THE MEASUREMENT OF AIRBORNE PARTICLES
22ND JOINT CONF. SENSING OF ENVIRONMENTAL POLLUTANTS
INSTRUMENT SOC. OF AM., 1973, PP. 161-168

GUNTHER, R.
AN OPTICAL SMOKE DENSITY METER FOR DIRECT INDICATION OF THE AMOUNT OF SOLIDS PER CUBIC METER OF FLUE GAS
STAUB REINHALTUNG DER LUFT, 33 (9), PP. 345-354, 1973.

HAMIL, H. F., D. E. CAMANN, AND R. E. THOMAS
THE COLLABORATIVE STUDY OF EPA METHODS 5, 6, AND 7 IN FOSSIL FUEL FIRED STEAM GENERATORS - FINAL REPORT
SOUTHWEST RESEARCH INSTITUTE, EPA, RESEARCH TRIANGLE PARK, N.C., 1974, 39 PP.
EPA-650/4-74-013 PB 237 695

HANSON, H. A., AND D. P. SAARI
EFFECTIVE SAMPLING TECHNIQUES FOR PARTICULATE EMISSIONS FROM ATYPICAL STATIONARY SOURCES - INTERIM REPORT
FLUIDYNE ENGINEERING CORP., EPA, RESEARCH TRIANGLE PARK, N.C. 1977, 130 PP.
EPA-600/2-77-036

HANSON, H. A., R. J. DAVINI, J. K. MORGAN, AND A. A. IVERSEN
PARTICULATE SAMPLING STRATEGIES FOR LARGE POWER PLANTS INCLUDING NONUNIFORM FLOW
FLUIDYNE ENGINEERING CORP., EPA, RESEARCH TRIANGLE PARK, N. C., 1976. 371 PP.
EPA-600/2-76-170 PB 257 090

HOOD, K. T.
OPACITY AND PARTICULATE EMISSION RELATIONSHIPS FOR PULP MILLS
NATIONAL COUNC. OF THE PAPER IND. FOR AIR AND STREAM IMPROVEMENT, INC., 1976

HOPTON, F. J., N. G. H. GUILFORD, J. A. CRAIGMILE, H. C. H. VERGEER, AND L. E. FRENCH
A TEST SYSTEM FOR EVALUATION OF SOURCE SAMPLING TECHNIQUES AND CALIBRATION OF EQUIPMENT
NEWSLETTER, SOURCE EVALUATION SOCIETY, WESTON, CONN. 1 (3), 8 PP., 1976

HUSAR, R. B.
ATMOSPHERIC PARTICULATE MASS MONITORING WITH A BETA RADIATION DETECTOR
ATMOS. ENVIRON., 8, PP. 183-188, 1974

KENDALL, D. R.
RECOMMENDATIONS ON A PREFERRED PROCEDURE FOR THE DETERMINATION OF PARTICULATE IN GASEOUS EMISSIONS
J. OF APCA, 26 (9), PP. 871-874, 1976

KUTYNA, A. G.
COMPARISON OF SOURCE PARTICULATE EMISSION MEASUREMENT METHODS FOR COMBINATION FUEL-FIRED BOILERS
TECHNICAL BULLETIN 75, NATIONAL COUNCIL OF THE PAPER INDUSTRY FOR AIR AND STREAM IMPROVEMENT, INC., 1974, 35 PP.

LAPSON, W. F., AND H. J. DEHNE
DESIGN, DEVELOPMENT, AND FABRICATION OF A PROTOTYPE HIGH-VOLUME PARTICULATE MASS SAMPLING TRAIN
ACUREX-AEROTHERM CORP., EPA, RESEARCH TRIANGLE PARK, N. C., 1974. 37 PP.
EPA-650/2-74-067 PB 245 196

LILIENFELD, P.
DESIGN AND OPERATION OF DUST MEASURING INSTRUMENTATION BASED ON THE BETA-RADIATION METHOD
STAUB REINHALTUNG DER LUFT, 35, PP. 458-465, 1975

LYTLE, J. H.
ASME METHOD FOR MEASUREMENT OF PARTICULATE EMISSIONS
WORKSHOP-SAMPLING,ANALYSIS, AND MONITORING OF STACK EMISSIONS, DALLAS, TEXAS, 1975, PP. 203-220

MACIAS, E. S., AND R. B. HUSAR
ATMOSPHERIC PARTICULATE MASS MEASUREMENT WITH BETA ATTENUATION MASS MONITOR
ENVIRON. SCI. & TECH., 10 (9), PP. 904-907, 1976

MACIAS, E. S., AND R. B. HUSAR
A REVIEW OF ATMOSPHERIC PARTICULATE MASS MEASUREMENT VIA THE BETA ATTENUATION TECHNIQUE
PROCEEDINGS: SYMPOSIUM ON FINE PARTICLES, MINNEAPOLIS, MINN. 1975, PP. 535-564

NADER, J. S.
CURRENT TECHNOLOGY FOR CONTINUOUS MONITORING OF PARTICULATE EMISSIONS
J. OF APCA, 25 (8), PP. 814-821, 1975

OLIN, J. G., G. J. SEM, AND R. P. TRAUTNER
AIR-QUALITY MONITORING OF PARTICLE MASS CONCENTRATION WITH A PIEZOELECTRIC PARTICLE MICROBALANCE
64TH ANNUAL MEETING, APCA, ATLANTIC CTTY, N.J.
1971, PAPER 71-1

PFISTER, E., AND F. E. SICK
AN INTEGRATION INSTRUMENT FOR TIMEWISE EVALUATION OF EMISSIONS
STAUB REINHALTUNG DER LUFT, (ENGLISH), 34 (2), PP. 53-56
1974

PILAT, M. J., AND D. S. ENSOR
PLUME OPACITY AND PARTICULATE MASS CONCENTRATION
ATMOS ENVIRON., 4, PP. 163-173, 1970

PROCHAZKA, R.
RECORDING DUST MEASUREMENT WITH THE KONITEST
PP. 22-28, DATE & SOURCE NOT DETERMINABLE

RAGLAND, J. W., K. M. CUSHING, J. D. MCCAIN, AND W. B. SMITH
HP-25 PROGRAMMABLE POCKET CALCULATOR APPLIED TO AIR POLLUTION MEASUREMENT STUDIES: STATIONARY SOURCES
SOUTHERN RESEARCH INSTITUTE, EPA, RESEARCH TRIANGLE PARK, N. C., 1977. 127 PP.
EPA-600/7-77-058

RAGLAND, J. W., K. M. CUSHING, J. D. MCCAIN, AND W. B. SMITH
HP-65 PROGRAMMABLE POCKET CALCULATOR APPLIED TO AIR POLLUTION MEASUREMENT STUDIES: STATIONARY SOURCES
SOUTHERN RESEARCH INSTITUTE, EPA, RESEARCH TRIANGLE PARK, N. C., 1976. 122 PP.
EPA-600/8-76-002

REISMAN, E., W. D. GERBER, AND N. D. POTTER
IN-STACK TRANSMISSOMETER MEASUREMENT OF PARTICULATE OPACITY AND MASS CONCENTRATIONS
PHILCO-FORD CORP., EPA, RESEARCH TRIANGLE PARK, N.C., 1974
115 PP.
EPA-650/2-74-120 PB 239 864

SEANY, R. J., R. K. HALPIN, AND B. A. MAGUIRE
A PORTABLE RECORDING INSTRUMENT (SIMSLIN) FOR MONITORING RESPIRABLE AIRBORNE DUST
STAUB REINHALTUNG DER LUFT (ENGLISH)
33 (5), PP. 222-229, 1973

SEMRAU, K. T., AND C. L. WITHAM
CONDENSATION AND EVAPORATION EFFECTS IN PARTICULATE SCRUBBING
68TH ANNUAL MEETING, APCA, BOSTON, MASS., 1975
PAPER 75-30.1

SEM, G. J.
STATE OF THE ART: 1971 INSTRUMENTATION FOR MEASUREMENT OF PARTICULATE EMISSIONS FROM COMBUSTION SOURCES. VOLUME I
THERMO-SYSTEMS, INC., EPA, RESEARCH TRIANGLE PARK, N.C.
1971, 194 PP.
PB 202 665

SEM, G. J.
STATE OF THE ART: 1971 INSTRUMENTATION FOR MEASUREMENT OF PARTICULATE EMISSIONS FROM COMBUSTION SOURCES. VOLUME II
THERMO-SYSTEMS, INC., EPA, RESEARCH TRIANGLE PARK, N.C., 1971
225 PP.
PB 202 666

SEM, G. J.
STATE OF THE ART: 1971 INSTRUMENTATION FOR MEASUREMENT OF PARTICULATE EMISSIONS FROM COMBUSTION SOURCES. VOLUME III
THERMO-SYSTEMS, INC., EPA, RESEARCH TRIANGLE PARK, N. C.
1972, 84 PP.
PB 233 393

SEM, G. J., K. TSURUBAYASHI, AND K. HOMMA
PERFORMANCE OF THE PIEZOELECTRIC MICROBALANCE RESPIRABLE AEROSOL SENSOR
AM. IND. HYG. ASSOC. J., 38, 1977, PP. 580-588.

SHOFNER, F. M., G. KREIKEBAUM, AND H. W. SCHMITT
IN SITU CONTINUOUS MEASUREMENT OF PARTICLE MASS CONCENTRATION
68TH ANNUAL MEETING, APCA, BOSTON, MASS., 1975, PAPER 75-41.1

SMITH, W. B., K. M. CUSHING, AND J. D. MCCAIN
PROCEDURES MANUAL FOR ELECTROSTATIC PRECIPITATOR EVALUATION
SOUTHERN RESEARCH INSTITUTE, EPA, RESEARCH TRIANGLE PARK, N. C., 1977. 430 PP.
EPA-600/7-77-059

SOUTHERN RESEARCH INSTITUTE
PROCEEDINGS OF THE WORKSHOP ON SAMPLING, ANALYSIS, AND MONITORING OF STACK EMISSIONS
SOUTHERN RESEARCH INSTITUTE, ELECTRIC POWER RESEARCH INST., PALO ALTO, CALIFORNIA, 1975. 346 PP.

STEEN, B.
A NEW SIMPLE ISOKINETIC SAMPLER FOR THE DETERMINATION OF PARTICLE FLUX
ATMOS. ENVIRON., 11, PP. 623-627, 1977

ZALEIKO, N. S., AND A. LICATA
PARTICLE MASS SOURCE MONITORING. MANUAL VS. INSTRUMENTAL
1975ANALYSIS INSTRUMENTATION
R. SOC. OF AM., 13, PP. 115-122, 1975

5. PARTICLE-SIZE DISTRIBUTIONS

AGARWAL, J. K., AND G. J. SEM
A CONTINUOUS FLOW CNC CAPABLE OF COUNTING SINGLE PARTICLES
UNPUBLISHED, THERMOSYSTEMS, INC., TECHNICAL PAPER,
5 TYPED PAGES, 1977

ALTPETER, L. L., JR., J. P. PILNEY, L. W. RUST,
AND D. L. OVERLAND
RECENT DEVELOPMENTS REGARDING THE USE OF A FLAME IONIZATION
DETECTOR AS AN AEROSOL MONITOR
PROCEEDINGS: SYMPOSIUM ON FINE PARTICLES, MINNEAPOLIS, MINN.
PP. 625-647, 1975

ANDERSEN, A. A.
A SAMPLER FOR RESPIRATORY HEALTH HAZARD ASSESSMENT
AMER. IND. HYG. ASSOC. J., PP. 160-165, 1966

ANDERSEN, A. A.
NEW SAMPLER FOR THE COLLECTION, SIZING, AND ENUMERATION OF
VIABLE AIRBORNE PARTICLES
J. OF BACTERIOL. 76, PP. 471-484, 1958

ANDERSON, D. P., AND P. LILIENFELD
DEVELOPMENT AND TESTING OF AN IN-STACK VIRTUAL IMPACTOR
70TH ANNUAL MEETING, APCA, TORONTO, 1977, PAPER 77-32.7

ANDERSON, P. L.
DEVELOPMENT OF A CENTRIFUGE FOR SOURCE SAMPLING TO DETERMINE
PARTICLE SIZE DISTRIBUTION
ENVIRON. SCI. & TECH. 10 (2), PP. 145-150, 1976

ANDERSON, W. L., AND R. E. BEISSNER
COUNTING AND CLASSIFYING SMALL OBJECTS BY FAR-FIELD LIGHT
SCATTERING
APPL. OPT., 10 (7), PP. 1503-1508, 1971

ARAGON, S. R. AND R. PECORA
THEORY OF DYNAMIC LIGHT SCATTERING FROM POLYDISPERSE SYSTEMS
J. OF CHEM. PHYS., 64 (6), PP. 2395-2403, 1976

BAKHANOVA, R. A., AND L. V. IVANCHENKO
THE CALIBRATION CURVE OF PHOTOELECTRIC COUNTERS AND COMPUTATION
OF PARTICLE SIZE DISTRIBUTION WHEN THE RELATIONSHIP BETWEEN
PARTICLE SIZE AND ELECTRICAL PULSE AMPLITUDE IS AMBIGUOUS
AEROSOL SCI., 4, PP. 485-490, 1973

BARTH, W.
DESIGN AND LAYOUT OF THE CYCLONE SEPARATOR ON THE BASIS OF NEW INVESTIGATIONS
BRENNS. WAERME KRAFT, 8 (GERMAN), PP. 1-9, 1956

BELDEN, L. H., AND C. M. PENNEY
OPTICAL MEASUREMENT OF PARTICLE SIZE DISTRIBUTION AND CONCENTRATION
TECHNICAL INFORMATION SERIES REPORT, GENERAL ELECTRIC CO., 1972, 45 PP.

BERNER, A.
PRACTICAL EXPERIENCE WITH 20-STAGE IMPACTOR
STAUB REINHALTUNG DER LUFT, IN ENGLISH, 32 (8), PP. 1-8, 1972

BERNER, A.
A SIMPLE PROCEDURE FOR CORRECTION OF FREQUENCY DISTRIBUTIONS MEASURED WITH A MULTI-STAGE IMPACTOR
STAUB REINHALTUNG DER LUFT, IN ENGLISH, 33 (4), PP. 190-194 1973

BETHEA, R. M., AND P. R. MOREY
A COMPARISON OF COTTON DUST SAMPLING TECHNIQUES
AMER. IND. HGY. ASSOC. J., 37, PP. 647-654, 1976

BEXON, R., G. D. BISHOP, AND J. BIGGS
AEROSOL SIZING BY HOLOGRAPHY USING THE QUANTIMET
CAMBRIDGE INSTRUMENT COMPANY, INC., BROCHURE, DATE NOT DETERMINABLE

BLACHMAN, M. W., AND M. LIPPMANN
PERFORMANCE CHARACTERISTICS OF THE MULTICYCLONE AEROSOL SAMPLER
AMER. IND. HYG. ASSOC. J., PP. 311-326, 1974

BLACKER, S. M.
EVALUATION OF THE ANDERSEN STACK SAMPLER FOR PARTICLE SIZE DETERMINATION
APPLIED TECH. DIV., EPA,DURHAM, N. C., 19 PP., 1972

BLAKE, D.
OPERATING AND SERVICE MANUAL SOURCE ASSESSMENT SAMPLING SYSTEM
ACUREX CORP., EPA, RESEARCH TRIANGLE PARK, N.C., 1977, 115 PP.

BLANN, D. R.
MEASUREMENT METHODS AT HIGH TEMPERATURE AND PRESSURE
SYMP. PARTICULATE CONTROL IN ENERGY PROCESSES, SAN FRANCISCO, CALIF., 1974, 25 PP.

BRESLIN, A. J., S. F. GUGGENHEIM, AND A. C. GEORGE
COMPACT HIGH-EFFICIENCY DIFFUSION BATTERIES
STAUB REINHALTUNG DER LUFT, IN ENGLISH,
31 (8), PP. 1-5, 1971

BRINK, J. A., JR.
CASCADE IMPACTOR FOR ADIABATIC MEASUREMENTS
IND. AND ENG. CHEM., 50 (4), PP. 645-648, 1958

BRINK, J. A., JR., E. D. KENNEDY, AND H. S. YU
PARTICLE SIZE MEASUREMENTS WITH CASCADE IMPACTORS
65TH ANNUAL MEETING, AICHE, NEW YORK, N. Y., 1972

BROOKMAN, R. S., J. F. PHILLIPPI, AND C. L. MAISCH
SMALL-DIAMETER CYCLONES
CHEM. ENGIN. PROGRESS, 59 (11), PP. 66-69, 1963

BUCHHOLZ, H.
AN UNDERPRESSURE CASCADE IMPACTOR
STAUB REINHALTUNG DER LUFT, IN ENGLISH, 30 (4), PP. 17-20, 1970

BURKHOLZ, A.
INVESTIGATIONS ON A CASCADE IMPACTOR
STAUB REINHALTUNG DER LUFT, IN ENGLISH, 33 (10), PP. 381-385 1973

CADLE, R. D.
PARTICLE SIZE DETERMINATION
INTERSCIENCE PUBLISHERS, INC., NEW YORK, 1955, 303 PP.

CALVERT, S., C. LAKE, AND R. PARKER
CASCADE IMPACTOR CALIBRATION GUIDELINES
A.P.T., INC., EPA, RESEARCH TRIANGLE PARK, N.C., 1976, 43 PP.
EPA-600/2-76-118 PB 252 656

CAPLAN, J. J., L. J. DOEMENY, AND S. D. SORENSON
PERFORMANCE CHARACTERISTICS OF THE 10 MICROMETER CYCLONE RESPIRABLE MASS SAMPLER: PART 1 - MONODISPERSE STUDIES
AMER. IND. HYG. ASSOC. J., 38, PP. 83-95, 1977

CAPLAN, K. J., L. J. DOEMENY, AND S. D. SORENSON
PERFORMANCE CHARACTERISTICS OF THE 10 MICRON RESPIRABLE MASS SAMPLER: PART II - COAL DUST STUDIES
AMER. IND. HYG. ASSOC. J., 38, PP. 162-173, 1977

CARPENTER, T. E., AND D. L. BRENCHLEY
A PIEZOELECTRIC CASCADE IMPACTOR FOR AEROSOL MONITORING
AMER. IND. HYG. ASSOC. J., PP. 503-510, 1972

CHANG, H. C.
A PARALLEL MULTICYCLONE SIZE-SELECTIVE PARTICULATE SAMPLING TRAIN
AMER. IND. HYG. ASSOC. J., PP. 538-545, 1974

CHAN, P. W.
OPTICAL MEASUREMENTS OF SMOKE PARTICLE SIZE GENERATED BY ELECTRIC ARCS
COLO. STATE UNIV., EPA, WASHINGTON, D. C., 1974, 49 PP.
EPA-650/2-74-034 PB 236 580

CHAN, T., AND M. LIPPMANN
PARTICLE COLLECTION EFFICIENCIES OF AIR SAMPLING CYCLONES: AN EMPIRICAL THEORY
ENVIRON. SCI. & TECH, 11 (4), PP. 377-382, 1977

CLAUSEN, J., A. GRANT, D. MOORE, AND S. REYNOLDS
FIELD SAMPLING FOR CYTOTOXICITY TEST SAMPLES USING A SERIES CYCLONE SAMPLING TRAIN
TRW SYSTEMS GROUP, EPA, RESEARCH TRIANGLE PARK, N. C.
1975, 91 PP.

COHEN, J. J., AND D. N. MONTAN
THEORETICAL CONSIDERATIONS, DESIGN, AND EVALUATION OF A CASCADE IMPACTOR
AMER. IND. HYG. ASSOC. J., PP. 95-104, 1976

COLLINS, E. A., J. A. DAVIDSON, AND C. A. DANIELS
REVIEW OF COMMON METHODS OF PARTICLE SIZE MEASUREMENT
J. PAINT. TECHNOL. 47 (604), PP. 35-56, 1975

COOPER, DOUGLAS W.
DATA INVERSION METHOD AND ERROR ESTIMATE FOR CASCADE CENTRIPETERS
AM. IND. HYG. ASSOC. J., 37, PP. 622-627, 1976

COOPER, D. W., AND J. W. DAVIS
CASCADE IMPACTORS FOR AEROSOLS: IMPROVED DATA ANALYSIS
AMER. IND. HYG. ASSOC. J., 33, PP. 79-89, 1972

COOPER, D. W., AND L. A. SPIELMAN
A NEW PARTICLE SIZE CLASSIFIER: VARIABLE-SLIT IMPACTOR WITH PHOTO-COUNTING
ATMOS. ENVIRON. 8, PP. 221-232, 1974

CORNILLAULT, J.
PARTICLE SIZE ANALYZER
APPL. OPTICS, 11 (2), PP. 265-268, 1972

COUCHMAN, J. C., AND H. M. MOSELEY
SIMPLIFIED METHOD FOR DETERMINING CASCADE IMPACTOR STAGE EFFICIENCIES
AMER. IND. HYG. ASSOC. J., PP. 62-67, 1967

CUSHING, K. M., G. E. LACEY, J. D. MCCAIN, AND W. B. SMITH
PARTICULATE SIZING TECHNIQUES FOR CONTROL DEVICE EVALUATION: CASCADE IMPACTOR CALIBRATIONS
SOUTHERN RESEARCH INSTITUTE, EPA, RESEARCH TRIANGLE PARK, N. C., 1976, 94 PP.
EPA-600/2-76-280

DAVIES, C. N., AND M. AYLWARD
THE TRAJECTORIES OF HEAVY, SOLID PARTICLES IN A TWO-DIMENSIONAL JET OF IDEAL FLUID IMPINGING NORMALLY UPON A PLATE
PROCEEDINGS, PHYSICAL SOC., 64, PP. 889-991, 1951

DAVIES, R.
PARTICLE SIZE ANALYSIS
IND. AND ENG. CHEM., 62 (12), PP. 87-93, 1970

DINGLE, A. N., AND B. M. JOSHI
AMMONIUM SULFATE CRYSTALLIZATION IN ANDERSEN CASCADE IMPACTOR SAMPLES
ATMOS. ENVIRON. 8, PP. 1119-1130, 1974

DOBBINS, R. A., AND G. S. JIZMAGIAN
PARTICLE SIZE MEASUREMENTS BASED ON USE OF MEAN SCATTERING CROSS SECTIONS
J. OPT. SOC. OF AMER. 56 (10), PP. 1351-1354, 1966

DROZIN, F. G., AND V. K. LAMER
THE DETERMINATION OF PARTICLE SIZE DISTRIBUTION OF AEROSOLS BY PRECIPITATION OF CHARGED PARTICLES
J. COLLOID SCI., 14, PP. 74-90, 1959

DZUBAY, T. G., L. E. HINES, AND R. K. STEVENS
PARTICLE BOUNCE ERRORS IN CASCADE IMPACTORS
ATMOS. ENVIRON. 10, PP. 229-234, 1974

FELIX, L. G., G. I. CLINARD, G. E. LACEY, AND J. D. MCCAIN
INERTIAL CASCADE IMPACTOR SUBSTRATE MEDIA FOR FLUE GAS SAMPLING
SOUTHERN RESEARCH INSTITUTE, EPA, RESEARCH TRIANGLE PARK,
N. C., 1977, 89 PP.
EPA-600/7-77-060

FERNANDEZ, G.
PARTICLE SIZE DETERMINATION BY USE OF ELECTROSTATIC PRECIPITA
TION PATTERNS AND RADIOACTIVE TRACERS
THESIS, AIR UNIVERSITY, 1964

FLESCH, J. P.
CALIBRATION STUDIES OF A NEW SUB-MICRON AEROSOL SIZE
CLASSIFIER
J. OF COLL. AND INTERFACE SCI. 29 (3), PP. 502-509, 1969

FLESCH, J. P., C. H. NORRIS, AND A. E. NUGENT, JR.
CALIBRATING PARTICULATE AIR SAMPLERS WITH MONODISPERSE AEROSOLS:
APPLICATION TO THE ANDERSEN CASCADE IMPACTOR
AMER. IND. HGY. ASSOC. J., PP. 507-516, 1967

FLOYD, J., AND K. KNAPP
FINE PARTICLE MEASUREMENT IN STATIONARY SOURCES
69TH ANNUAL MEETING, APCA, PORTLAND, OREGON, 1976,
PAPER 76-30.10

FORNEY, L. J.
AEROSOL FRACTIONATOR FOR LARGE-SCALE SAMPLING
REV. SCI. INSTRUM., 46 (10), PP. 1264-1269, 1976

FUCHS, N. A., I. B. STECHKINA, AND V. I. STAROSSELSKII
ON THE DETERMINATION OF PARTICLE SIZE DISTRIBUTION IN POLY-
DISPERSE AEROSOLS BY THE DIFFUSION METHOD
BRIT. J. APPL. PHYS. 16, PP. 280-281, 1962

GERBER, H.E.
ON THE PERFORMANCE OF THE GOETZ AEROSOL SPECTROMETER
ATMOS. ENVIRON., 5, PP. 1009-1031, 1971

GOETZ, A., H. J. R. STEVENSON, AND O. PREINING
THE DESIGN AND PERFORMANCE OF THE AEROSOL SPECTROMETER
J. APCA, 10 (5), PP. 378-383, 1960

GOLDSCHMIDT, V. W.
MEASUREMENT OF AEROSOL CONCENTRATIONS WITH A HOT WIRE ANEMOMETER
J. OF COLLOID SCI., 20, PP. 617-634, 1965

GOODING, C. H.
WIND TUNNEL EVALUATION OF PARTICLE SIZING INSTRUMENTS
RESEARCH TRIANGLE INST., EPA, RESEARCH TRIANGLE PARK, N.C.
1976, 72 PP.
EPA-600/2-76-073 PB 251 172

GRAEDEL, T. E.
CHANNEL WIDTH DETERMINATION AND ELECTRONIC PULSE PROCESSING LOSSES IN OPTICAL PARTICLE COUNTERS
AEROSOL SCI., 5, PP. 125-131, 1974

GRASSL, H.
DETERMINATION OF CLOUD DROP SIZE DISTRIBUTIONS FROM SPECTRAL TRANSMISSION MEASUREMENTS
BEITRAGE ZUR PHYSIC DER ATMOSPHARE (IN GERMAN), 43, PP. 255-284, 1970

GRASSL, H.
DETERMINATION OF AEROSOL SIZE DISTRIBUTIONS FROM SPECTRAL ATTENUATION MEASUREMENTS
APPL. OPT. 10 (11), PP. 2534-2538, 1971

GRAVATT, C. C.
LIGHT SCATTERING METHODS FOR THE CHARACTERIZATION OF PARTICULATE MATTER IN REAL TIME
PROCEEDINGS - SEMINAR ON AEROSOL MEASUREMENTS NAT'L. BUR. OF STANDARDS, WASHINGTON, D. C., 1974

GRAVATT, C. C., JR.
REAL TIME MEASUREMENT OF THE SIZE DISTRIBUTION OF PARTICULATE MATTER BY A LIGHT SCATTERING METHOD
J. OF APCA, 23 (12), PP. 1035-1038, 1973

GRAY, D. C.
SURVEY OF SAMPLING TECHNIQUES FOR DEFINING RESPIRABLE CONCEN-TRATION AND/OR PARTICLE-SIZE CHARACTERISTICS OF AEROSOLS
LOS ALAMOS SCI. LAB., ERDA, WASHINGTON, D. C., 11 PP., 1976

GUCKER, F. T., J. TUMA, H. M. LIN, C. M. HUANG, S. C. EMS, AND T. R. MARSHALL
RAPID MEASUREMENT OF LIGHT-SCATTERING DIAGRAMS FROM SINGLE PARTICLES IN AEROSOL STREAM & DETERM. OF LATEX PARTICLE SIZE
AEROSOL SCI., 4, PP. 389-404, 1973

GUSSMAN, R. A., A. M. SACCO, AND N. M. MCMAHON
DESIGN AND CALIBRATION OF A HIGH-VOLUME CASCADE IMPACTOR
J. OF APCA, 23 (9), PP. 778-782, 1973

HABERL, J. B.
A LINEAR SCALE AITKEN NUCLEI COUNTER WITH AUTOMATIC RANGE SELECTION
J. OF APCA, 2, 3 PP., 1977

HARRIS, D. B.
PROCEDURES FOR CASCADE IMPACTOR CALIBRATION AND OPERATION IN PROCESS STREAMS
EPA, WASHINGTON, D. C., 1977, 121 PP.
EPA-600/2-77-004

HEYDER, J., AND J. PORSTENDORFER
COMPARISON OF OPTICAL AND CENTRIFUGAL AEROSOL SPECTROMETRY: LIQUID AND NON-SPHERICAL PARTICLES
AEROSOL SCI. 5, PP. 387-400, 1974

HINDE, A. L., AND P. J. D. LLOYD
REAL-TIME PARTICLE SIZE ANALYSIS IN WET CLOSED-CIRCUIT MILLING
POWDER TECHNOL. 12 (1), PP. 37-50, 1975

HOCHSTRASSER, J. M.
THE INVESTIGATION AND DEVELOPMENT OF CYCLONE DUST COLLECTOR THEORIES FOR APPLICATION TO MINIATURE CYCLONE PRESAMPLERS
DISSERTATION, UNIVERSITY OF CINCINNATI, 1976, 268 PP.

HOGAN, A. W.
CALIBRATION OF PHOTO ELECTRIC NUCLEUS COUNTERS
68TH ANNUAL MEETING, APCA, BOSTON, MASS., 1975, PAPER 75-62.2

HORVATH, H., AND A. T. ROSSANO, JR.
TECHNIQUE FOR MEASURING DUST COLLECTOR EFFICIENCY AS A FUNCTION OF PARTICLE SIZE
J. OF APCA, 20 (4), PP. 244-246, 1970

HOTHAM, G. A.
SIZE OF RESPIRABLE AEROSOLS BY PULSING UV LASER MACHINE
AEROSOL MEASUREMENT SEMINAR, FDA AND NBS, GAITHERSBURG, MD., 1974, 55 PP.

HOUNAM, R. F., AND R. J. SHERWOOD
THE CASCADE CENTRIPETER: A DEVICE FOR DETERMINING THE CONCENTRATION AND SIZE DISTRIBUTION OF AEROSOLS
IND. HYG. J., PP. 122-131, 1965

IINOYA, K., AND S. YU
ON SEPARATION OF MECHANISM OF TWO-DIMENTIONAL CASCADE IMPACTOR
KAGAKU KOGAKU, 33, PP. 1265-1271, 1969

IRANI, R. R., AND C. F. CALLIS
PARTICLE SIZE: MEASUREMENT, INTERPRETATION, AND APPLICATION
JOHN WILEY & SONS., INC., NEW YORK, 1963, 165 PP.

JACKSON, M. L.
PARTICLE-MOLECULE COLLECTION BY SONIC FLOW IMPINGERS
J. OF APCA, 24 (6), PP. 569-575, 1974

JACKSON, M. L., S. CHIMONAS, AND R. G. PATTERSON
SAMPLE COLLECTION OF SOLID AND LIQUID AEROSOLS BY SONIC-FLOW IMPINGEMENT
76TH NATIONAL MEETING OF AICHE, MAR. 1974

JAENICKE, R.
THE DOUBLE-STAGE IMPACTOR, A FURTHER APPLICATION OF THE IMPACTOR PRINCIPLE
STAUB REINHALTUNG DER LUFT, 31 (6), PP. 1-10, 1971

JAENICKE, R., AND H. J. KANTER
DIRECT CONDENSATION NUCLEI COUNTER WITH AUTOMATIC PHOTOGRAPHIC RECORDING, AND GENERAL PROBLEMS OF "ABSOLUTE" COUNTERS
J. OF APPL. METEOROLOGY, 15 (6), PP. 620-632, 1976

KERKER, M.
LIGHT SCATTERING BY SINGLE AEROSOL PARTICLES
PROCEEDINGS - SEMINAR ON AEROSOL MEASUREMENTS NAT'L BUR. OF STANDARDS, WASHINGTON, D. C., 1974

KNOLLENBERG, R. G.
THE OPTICAL ARRAY: AN ALTERNATIVE TO SCATTERING OR EXTINCTION FOR AIRBORNE PARTICLE SIZE DETERMINATION
J. OF APPL. METEOROLOGY, 9, PP. 86-103, 1970

KNOLLENBERG, R. G.
ACTIVE SCATTERING AEROSOL SPECTROMETRY
PROCEEDINGS - SEMINAR ON AEROSOL MEASUREMENT NAT'L. BUR. OF STANDARDS, WASHINGTON, D. C., 1974

KNOLLENBERG, R. G.,
THREE NEW INSTRUMENTS FOR CLOUD MEASUREMENTS: THE 2-D SPECTROMETER, THE FORWARD SCATTERING SPECTROMETER PROBE, AND THE ACTIVE SCATTERING AEROSOL SPECTROMETER
PREPRINT VOLUME INTERNATIONAL CONF. ON CLOUD PHYSICS, 1976

KNUTSON, E. O., AND K. T. WHITBY
AEROSOL CLASSIFICATION BY ELECTRIC MOBILITY: APPARATUS, THEORY, AND APPLICATIONS
J. AEROSOL SCI., 6, PP. 443-451, 1975

KOPS, J., L. HERMANS, AND J. F. VAN DE VATE
CALIBRATION OF A STOBER CENTRIFUGAL AEROSOL SPECTROMETER
AEROSOL SCI., 5, PP. 379-386, 1974

KREIKEBAUM, G., AND F. M. SHOFNER
DESIGN CONSIDERATIONS AND FIELD PERFORMANCE FOR AN INSITU, CONTINUOUS FINE PARTICULATE MONITOR BASED ON RATIO-TYPE LASER LIGHT SCATTERING
INTERN'L CONF. ENVIRON. SENSING AND ASSESSMENT, LAS VEGAS, NEVADA, 1975, 18 PP.

KUBIE, G.
A NOTE ON A TREATMENT OF IMPACTOR DATA FOR SOME AEROSOLS
AEROSOL SCIENCE, 2, PP. 23-30, 1971

LEDBETTER, J. O., AND B. R. FISH
THE JET FILTER - SINGLE-STAGE SIZE-SELECTIVE SAMPLER FOR AIRBORNE PARTICULATES
AMER. IND. HYG. ASSOC. J., PP. 90-93, 1972

LEE, R. E., JR.
SIZE DISTRIBUTION OF SUSPENDED PARTICULATES IN AIR
RESEARCH AND DEVELOPMENT, PP. 18-21, 1972

LEITH, D., AND D. MEHTA
CYCLONE PERFORMANCE AND DESIGN
ATMOS. ENVIRON., 7, PP. 527-549, 1973

LEITH, D., AND M. W. FIRST
UNCERTAINTY IN PARTICLE COUNTING AND SIZING PROCEDURES
AMER. IND. HYG. ASSOC. J., PP. 103-108, 1976

LEITH, D., AND W. LICHT
THE COLLECTION EFFICIENCY OF CYCLONE TYPE PARTICLE COLLECTORS -- A NEW THEORETICAL APPROACH
A.I.CH.E. SYMPOSIUM SERIES, V, 69, PP. 196-206, 1971

LESCHONSKI, W. A., AND B. KOGLIN
PARTICLE SIZE ANALYSIS, SEPARATION METHODS
CHEM. ING. TECH. 46 (19), PP. 821-824, (GERMAN), 1974

LIEBERMAN, A.
ROYCO INSTRUMENTS PARTICLE COUNTERS: CAPABILITIES AND LIMITATIONS
AEROSOL MEASUREMENT WORKSHOP, GAINESVILLE, 1976, P. 1-6

LIPPMANN, J.
REVIEW OF CASCADE IMPACTORS FOR PARTICLE SIZE ANALYSIS AND NEW CALIBRATION FOR THE CASELLA CASCADE IMPACTOR
IND. HYG. J., PP. 403-416, 1959

LIPPMANN, M.
SIZE-SELECTIVE SAMPLING FOR INHALATION HAZARD EVALUATIONS
PROCEEDINGS: SYMPOSIUM ON FINE PARTICLES, MINNEAPOLIS, MINN. 1975, PP. 287-310

LIPPMANN, M., AND T. L. CHAN
CALIBRATION OF DUAL-INLET CYCLONES FOR 'RESPIRABLE' MASS SAMPLING
AMER. IND. HYG. ASSOC. J., PP. 189-206, 1974

LIU, B. Y. H.
LABORATORY GENERATION OF PARTICULATES WITH EMPHASIS ON SUBMICRON AEROSOLS
J. OF APCA, 24 (12), PP. 1173-1172, 1974

LIU, B. Y. H., AND A. VERMA
A PULSE CHARGING, PULSE PRECIPITATING ELECTROSTATIC AEROSOL SAMPLER
ANAL. CHEM. 40 (4), PP. 840-847, 1962

LIU, B. Y. H., AND D. Y. H. PUI
ON THE PERFORMANCE OF THE ELECTRICAL AEROSOL ANALYZER
J. AERO. SCI., 6, PP. 249-264, 1975

LIU, B. Y. H., K. T. WHITBY, AND D. Y. H. PUI
A PORTABLE ELECTRICAL ANALYZER FOR SIZE DISTRIBUTION MEASUREMENT OF SUB-MICRON AEROSOLS
J. OF APCA, 24 (11), PP. 1067-1072, 1974

LIU, B. Y. H., R. N. BERGLUND, AND J. K. AGARWAL
EXPERIMENTAL STUDIES OF OPTICAL PARTICLE COUNTERS
ATMOS. ENVIR. 8, PP. 717-732, 1974

LIU, B. Y. H., V. A. MARPLE, K. T. WHITBY, AND N. J. BARSIC
SIZE DISTRIBUTION MEASUREMENT OF AIRBORNE COAL DUST BY OPTICAL PARTICLE COUNTERS
AMER. IND. HYG. ASSOC. J., PP. 443-451, 1974

LOCHART, L., AND R. L. PATTERSON, JR.
FILTER PACK TECHNIQUE CLASSIFYING RADIOACTIVE AEROSOLS BY PARTICLE SIZE
U.S. NAVAL RES. LAB., WASHINGTON, D. C., 11 PP., 1963

LOFFLER, F.
THE CALCULATION OF CENTRIFUGAL SEPARATORS
STAUB REINHALTUNG DER LUFT, IN ENGLISH, 30 (12), PP. 105
1970

LOO, B. W., J. M. JAKLEVIC, AND F. A. GOULDING
DICHOTOMOUS VIRTUAL IMPACTORS FOR LARGE SCALE MONITORING OF AIRBORNE PARTICULATE MATTER
PROCEEDINGS: SYMPOSIUM ON FINE PARTICLES, MINNEAPOLIS, MINN. 1975, PP. 311-350

LUDWIG, F. L.
BEHAVIOR OF A NUMERICAL ANALOG TO A CASCADE IMPACTOR
ENVIRON. SCI. & TECH., 2 (7), PP. 547-550, 1968

LUNA, R.
A STUDY OF IMPINGING AXI-SYMMETRIC JETS AND THEIR APPLICATIONS
DISSERTATION, PRINCETON UNIV., UNIV. MICROFILM, HIGH WYCOMB, ENGLAND, 117 PP, 1965

LUNDGREN, D. A.
AN AEROSOL SAMPLER FOR DETERMINATION OF PARTICLE CONCENTRATION AS A FUNCTION OF SIZE AND TIME
J. OF APCA, 17 (4), PP. 225-559, 1967

LUNDGREN, D. A., AND A. R. MCFARLAND
APPLICATION OF A LIGHT-SCATTERING AEROSOL COUNTER AND A FOUR-STAGE IMPACTOR TO INDUSTRIAL HYGIENE AIR SAMPLING
AMER. IND. HYG. ASSOC., 32, PP. 35-42, 1971

MACWILLIAM G. L., F. GUTIERREZ, AND A. S. LEE
INVESTIGATION OF A PERFUSION IMPACTION DUST SEPARATOR
OAK RIDGE NATIONAL LABORATORY, 45 PP, 1975

MAIGNE, J. P., AND G. MADELAINE
NEW METHODS FOR AEROSOL SIZE DISTRIBUTION DETERMINATION WITH A DIFFUSION BATTERY
WATER AIR SOIL POLLUT., 3 (4), PP. 527-535, 1974

MAIGNE, J. P., P. Y. TURPIN, G. MODELAINE, AND J. BRICARD
NOUVELLE METHODE DE DETERMINATION DE LA GRANULOMETRIE D'UN AEROSOL AU MOYEN D'UNE BATTERIE DE DIFFUSION
AEROSOL SCI. (FRENCH) 5, PP. 339-355, 1974

MALLOVE, E. F., AND W. C. HINDS
AEROSOL MEASUREMENT BY COMBINED LIGHT SCATTERING AND CENTRIFUGATION
J. AEROSOL SCI., 7, PP. 409-423, 1976

MALTONI, G. G., C. MELANDRI, V. PRODI, G. TARRONI, A. DEZAIACOMO, G. F. BOMPANE, AND M. FORMIGNANI
AN IMPROVED PARALLEL PLATE MOBILITY ANALYZER FOR AEROSOL PARTICLES
AEROSOL SCI., 4, PP. 447-455, 1973

MARLOW, W. H., AND R. L. TANNER
DIFFUSION SAMPLING METHOD FOR AMBIENT AEROSOL SIZE DISCRIMINATION WITH CHEMICAL COMPOSITION DETERMINATION
ANAL. CHEM. 48 (13), PP. 1999-2001, 1976

MARLOW, W. H., P. C. REIST, AND G. A. DWIGGINS
ASPECTS OF THE PERFORMANCE OF THE ELECTRICAL AEROSOL ANALYZER UNDER NONIDEAL CONDITIONS
J. AEROSOL SCI., 7, PP. 457-462, 1976

MARPLE, V. A.
THE AERODYNAMIC SIZE CALIBRATION OF OPTICAL PARTICLE COUNTERS BY INERTIAL IMPACTORS
PARTICLE TECH. LAB. PUB. #306, PRESENTED AT AEROSOL MEASUREMENT WORKSHOP, U. OF FLA, GAINESVILLE, 1976, 13 PP.

MARPLE, V. A.
A FUNDAMENTAL STUDY OF INERTIAL IMPACTORS
DISSERTATION, UNIV. OF MINN., UNIVERSITY MICROFILMS, HIGH WYCOMB, ENGLAND, 1970, 243 PP.

MARPLE, V. A., AND B. Y. H. LIU
CHARACTERISTICS OF LAMINAR JET IMPACTORS
ENVIRON. SCI. & TECH., 8 (7), PP. 648-654, 1974

MARPLE, V. A., AND K. WILLEKE
IMPACTOR DESIGN
ATMOS. ENVIRON., 10, PP. 891-896, 1976

MARPLE, V. A., B. Y. H. LIU, AND K. T. WHITBY
FLUID MECHANICS OF THE LAMINAR FLOW AEROSOL IMPACTOR
AEROSOL SCI., 5, PP. 1-16, 1974

MARPLE, V. A., N. J. BARSIC, AND K. T. WHITBY
INSTRUMENTS AND TECHNIQUES FOR DYNAMIC PARTICLE SIZE MEASUREMENT OF COAL DUST; FINAL REPORT
UNIV. OF MINN., DEPT. OF INTERIOR, WASHINGTON, D. C., 1974, 131 PP.

MARTENS, A. E.
ERRORS IN MEASUREMENT AND COUNTING OF PARTICLES USING LIGHT SCATTERING
J. OF APCA, 15 (10), PP. 661-663, 1968

MARTENS, A. E., AND D. D. DOONAN
COMMENTS ON: INFLUENCE OF REFRACTIVE INDEX ON THE ACCURACY OF SIZE DETERMINATION OF AEROSOL PARTICLES WITH LIGHT-SCATTERING.
APPL. OPT. 9 (8), PP. 1930-1932, 1970

MATTESON, M. J., G. F. BOSCOE, AND O. PREINING
DESIGN THEORY AND CALIBRATION OF A FIELD TYPE AEROSOL SPECTROMETER
AEROSOL SCI., 5, PP. 71-79, 1974

MATTHEWS, B. J.
DEVELOPMENT OF LASER INSTRUMENTATION FOR PARTICLE MEASUREMENT
TRW SYSTEMS GROUP, EPA, RESEARCH TRIANGLE PARK, N.C., 1971, 72 PP.
APTD-0870 PB 205 189

MATTHEWS, B. J., AND C. W. LEAR
APPLICATION OF HOLOGRAPHIC METHODS TO THE MEASUREMENT OF FLAMES AND PARTICULATE, VOLUME II
TRW SYSTEMS GROUP, EPA, WASHINGTON, D. C., 1974, 123 PP.
EPA-650/2-74-031B PB 235 675

MATTHEWS, B. J., AND R. F. KEMP
HOLOGRAPHY OF LIGHT SCATTERED BY PARTICULATE IN A LARGE STEAM BOILER
63RD ANNUAL MEETING, AICHE, SYMPOSIUM: CONTINUOUS PARTICULATE MONITORING, NOV. - DEC. 1973

MAY, K. R.
AEROSOL IMPACTOR JETS
J. OF AEROSOL SCI., 6, PP. 403-411, 1975

MAY, K. R.
THE CASCADE IMPACTOR: AN INSTRUMENT FOR SAMPLING COARSE AEROSOLS
J. OF SCI. INSTR., 22, PP. 187-195, 1945

MAY, K. R., AND G. J. HARPER
THE EFFICIENCY OF VARIOUS LIQUID IMPINGER SAMPLES IN BACTERIAL AEROSOLS
BRIT. J. INDUSTR. MED., 14, P. 287, 1957

MAY, K. R., AND R. CLIFFORD
THE IMPACTION OF AEROSOL PARTICLES ON CYLINDERS, SPHERES, RIBBONS, AND DISCS
ANN. OCCUP. HYG., 10, PP. 83-95, 1967

MCFARLAND, A. R., H. S. NYE, AND C. H. ERICKSON
DEVELOPMENT OF A LOW PRESSURE IMPACTOR
ANDERSEN 2000, INC., EPA, RESEARCH TRIANGLE PARK, N. C.
1973, 56 PP.
EPA-650/2-74-047 PB 237 417

MCSWEENEY, A.
A DIFFRACTION TECHNIQUE TO MEASURE SIZE DISTRIBUTION OF LARGE AIRBORNE PARTICLES
GEORGIA INST. OF TECH., EPA, RESEARCH TRIANGLE PARK, N.C.
1976, 57 PP.
EPA-600/3-76-073 PB 255 454

MCSWEENEY, A.
AN OPTICAL TRANSFORM TECHNIQUE FOR MEASURING THE SIZE DISTRIBUTION OF PARTICLES IN FLUIDS
PROCEEDINGS - SEMINAR ON AEROSOL MEASUREMENT, NAT'L BUR. OF STANDARDS, WASHINGTON, D. C., 1974

MEDECKI, H., AND D. E. MAGNUS
LIQUID AEROSOL DETECTION AND MEASUREMENT
68TH ANNUAL MEETING, APCA, BOSTON, MASS., 1975, PAPER 75-24.1

MEDECKI, H., ET AL
DESIGN, DEVELOPMENT, AND FIELD TEST OF A DROPLET MEASURING DEVICE
KLD ASSOC., INC., EPA, RESEARCH TRIANGLE PARK, N. C., 1975
56 PP.
EPA-650/2-75-018 PB 245 607

MERCER, T. T.
ON THE CALIBRATION OF CASCADE IMPACTORS
ANN. OCCUP. HYG. 6, PP. 1-17, 1963

MERCER, T. T.
THE INTERPRETATION OF CASCADE IMPACTOR DATA
INDUSTR. HYG. J., 36, PP. 236-241, 1965

MERCER, T. T.
THE STAGE CONSTANTS OF CASCADE IMPACTORS
ANN. OCCUP. HGY. 7, PP. 115-124, 1964

MERCER, T. T., AND H. Y . CHOW
IMPACTION FROM RECTANGULAR JETS
J. OF COLL. AND INTER. SCI., 27 (1), PP. 75-83, 1968

MERCER, T. T., AND R. G. STAFFORD
IMPACTION FROM ROUND JETS
ANN. OCCUP. HYG., 12, PP. 41-48, 1969

MERCER, T. T., AND T. D. GREENE
INTERPRETATION OF DIFFUSION BATTERY DATA
AEROSOL SCIENCE, 5, PP. 251-255, 1974

MERCER, T. T., M. I. TILLERY, AND G. J. NEWTON
A MULTI-STAGE LOW FLOW RATE CASCADE IMPACTOR
AEROSOL SCI., 1, PP. 9-15, 1970

MERCER, T.,T., AND R. T. MERCER
DIFFUSIONAL DEPOSITION FROM A FLUID FLOWING RADIALLY BETWEEN
CONCENTRIC, PARALLEL, CIRCULAR PLATES
AEROSOL SCI., 1, PP. 279-285, 1970

MILLER, K., AND H. W. DEKONING
PARTICLE SIZING INSTRUMENTATION
67TH ANNUAL MEETING, APCA, DENVER, COLO., 1974, PAPER 74-48

MITCHELL, R. I., AND E. J. SCHULZ
DEVELOPMENT OF A 7-STAGE LIGHT-SCATTERING CASCADE IMPACTOR FOR
PARTICLE SIZE ANALYSIS OF AEROSOLS
63RD ANNUAL MEETING, AMER. INST. CHEM. ENG., CHICAGO, 1970

MITCHELL, R. I., AND J. M. PILCHER
IMPROVED CASCADE IMPACTOR FOR MEASURING AEROSOL PARTICLE SIZES
IN AIR POLLUTANTS, COMMERCIAL AEROSOLS, CIGARETTE SMOKE
IND. AND ENG. CHEM., 51 (9), PP. 1039-1042, 1959

MUSCHELKNAUTZ, E.
DESIGN OF CYCLONE SEPARATORS IN THE ENGINEERING PRACTICE
STAUB REINHALTUNG DER LUFT, IN ENGLISH, 30 (5), PP. 1-12, 1970

MYERS, R. L., T. M. BARLAK, AND W. L. FITE
AN AUTOMATIC, REAL-TIME DETECTOR AND SIZER FOR SUBMICRON AIRBORNE PARTICULATE MATTER
SUBMITTED TO RSI, 28 PP., 1975

NATUSCH, D. G. S., AND J. R. WALLACE
DETERMINATION OF AIRBORNE PARTICLE SIZE DISTRIBUTIONS: CALCULATION OF CROSS-SENSITIVITY AND DISCRETENESS EFFECTS IN CASCADE IMPACTION
ATMOS. ENVIRON., 10, PP. 315-324, 1976

NEWTON, G. J., O. G. RAABE, AND B. V. MOKLER
CASCADE IMPACTOR DESIGN AND PERFORMANCE
J. AEROSOL SCI., 8, PP. 339-347, 1977

NOLL, K. E.
A ROTARY INERTIAL IMPACTOR FOR SAMPLING GIANT PARTICLES IN THE ATMOSPHERE
ATMOS. ENVIRON., 4, PP. 9-19, 1970

NOLL, K. E., AND M. J. PILAT
INERTIAL IMPACTION OF PARTICLES UPON RECTANGULAR BODIES
J. OF COLL. AND INTER. SCI., 33 (2), PP. 197-207, 1970

PARKER, G. W., AND H. BUCHHOLZ
SIZE CLASSIFICATION OF SUBMICRON PARTICLES BY A LOW-PRESSURE CASCADE IMPACTOR
ORNL-4226, 64 PP., 1968

PARKER, R.
CALIBRATION OF FINE PARTICULATE SIZING DEVICES
AIR POLLUTION TECHNOLOGY, INC., 1976
EPA-600/2-76-118 PB 252 656

PERRY, J. H., AND R. H. PERRY
ENGINEERING MANUAL: A PRACTICAL REFERENCE OF DATA & METHODS IN ARCH., CHEM., CIVIL, ELEC.,MECH., & NUCLEAR ENGINEERING
MCGRAW-HILL BOOK CO., INC., NEW YORK, N.Y., PP. 60-63, 1959

PICH, J.
A NOTE ON THE DIFFUSIVE DEPOSITION OF AEROSOLS ON A CYLINDER
AEROSOL SCI., 1, PP. 17-19, 1970

PICKNETT, R. G.
A NEW METHOD OF DETERMINING AEROSOL SIZE DISTRIBUTIONS FROM MULTISTAGE SAMPLER DATA
AEROSOL SCI., 3, PP. 185-198, 1972

PILAT, M. J.
SUBMICRON PARTICLE SAMPLING WITH CASCADE IMPACTOR
66TH ANNUAL MEETING, APCA, CHICAGO, ILL, 1973, PAPER 73-284

PILAT, M. J., D. S. ENSOR, AND J. C. BOSCH
CASCADE IMPACTOR FOR SIZING PARTICULATES IN EMISSION SOURCES
AMER. IND. HYG. ASSOC. J., 32 (8), PP. 508-511, 1971

PILAT, M. J., D. S. ENSOR, AND J. C. BOSCH
SOURCE TEST CASCADE IMPACTOR
ATMOS. ENVIRON., 4, PP. 671-679, 1970

PILAT, M. J., G. M. FIORETTI, AND E. B. POWELL
SIZING OF 0.02-20 MICRON DIAMETER PARTICLES EMITTED FROM COAL-FIRED POWER BOILER WITH CASCADE IMPACTORS
PAPER PRESENTED APCA-PNWIS MEETING, VANCOUVER, B. C., 1975

PILCHER, J. M., R. I. MITCHELL, AND R. E. THOMAS
THE CASCADE IMPACTOR FOR PARTICLE-SIZE ANALYSIS OF AEROSOLS
42ND ANNUAL MEETING CHEM. SPEC. MANUF. ASSOC., INC., NEW YORK N. Y., 1955

POLLAK, L. W., T. C. O'CONNOR, AND A. L. METNIEKS
ON THE DETERMINATION OF THE DIFFUSION COEFFICIENT OF HETEROGENEOUS AEROSOLS BY THE DYNAMIC METHOD
GEOFISICA PURA E APPLICATA, 34, PP. 183-190, 1975

QUENZEL, H.
INFLUENCE OF REFRACTIVE INDEX ON THE ACCURACY OF SIZE DETERMINATION OF AEROSOL PARTICLES WITH LIGHT-SCATTERING AEROSOL COUNTERS
APPLIED OPTICS, 8 (1), PP. 165-169, 1969

RAGLAND, J. W., K. M. CUSHING, J. D. MCCAIN, AND W. B. SMITH
HP-25 PROGRAMMABLE POCKET CALCULATOR APPLIED TO AIR POLLUTION MEASUREMENT STUDIES: STATIONARY SOURCES
SOUTHERN RESEARCH INSTITUTE, EPA, RESEARCH TRIANGLE PARK, N. C., 1977. 127 PP.
EPA-600/7-77-058

RAGLAND, J. W., K. M. CUSHING, J. D. MCCAIN, AND W. B. SMITH
HP-65 PROGRAMMABLE POCKET CALCULATOR APPLIED TO AIR POLLUTION MEASUREMENT STUDIES: STATIONARY SOURCES
SOUTHERN RESEARCH INSTITUTE, EPA, RESEARCH TRIANGLE PARK, N. C., 1976. 122 PP.
EPA-600/8-76-002

RANZ, W. F.
PRINCIPLES OF INERTIAL IMPACTION: A SURVEY OF INFORMATION APPLICABLE TO AN ANALYSIS OF MIST AND DUST COLLECTORS
U.S. PUBLIC HEALTH SERVICE, 45 PP., 1956

RANZ, W. F., AND J. B. WONG
IMPACTION OF DUST AND SMOKE PARTICLES ON SURFACE AND BODY COLLECTORS
IND. AND ENG. CHEM., 44 (6), PP. 1371-1381, 1952

RANZ, W. E., AND J. B. WONG
JET IMPACTORS FOR DETERMINING THE PARTICLE-SIZE DISTRIBUTIONS OF AEROSOLS
IND. HYG. & OCCUP. MED., PP. 464-477, 1952

RAO, A. K.
AN EXPERIMENTAL STUDY OF INERTIAL IMPACTORS
DISSERTATION, UNIV. OF MINNESOTA, 1975, 194 PP.

RAO, A. K., AND K. T. WHITBY
NONIDEAL COLLECTION CHARACTERISTICS OF SINGLE STAGE AND CASCADE IMPACTORS
AMER. IND. HYG. ASSOC. J., 38, PP. 174-179, 1977

RATH, R., AND D. POHL
PARTICLE SIZE DETERMINATION WITH THE PARTICLE COUNTER
STAUB REINHALTUNG DER LUFT, (ENGLISH). 34 (4),
PP. 108-114, 1974

ROBERDS, D. W., W. M. FARMER, AND A. E. LENNERT
INTERFEROMETRIC INSTRUMENTATION FOR PARTICLE SIZE ANALYSIS
ARNOLD RESEARCH ORGANIZATION, INC., EPA, WASHINGTON, D. C.
1974, 56 PP.
EPA-650/2-73-034 PB 240 584

SCHOTT, J. H., AND W. E. RANZ
JET-CONE IMPACTORS AS AEROSOL PARTICLE SEPARATORS
J. OF ENVIRON. SCI. & TECH., 10 (13), PP. 1250-1256, 1976

SCHUSTER, B., AND R. KNOLLENBERG
DETECTION AND SIZING OF SMALL PARTICLES IN AN OPEN CAVITY GAS LASER
APPL. OPT., 11 (7), PP. 1515-1520, 1972

SEHMEL, B. A.
AN EVALUATION OF A HIGH-VOLUME CASCADE PARTICLE IMPACTOR SYSTEM
2ND JOINT CONF. SENSING ENVIRON. POLLUT., WASHINGTON, D.C.
PP. 109-115, 1973

SEM, G. J.
STATE OF THE ART: 1971 INSTRUMENTATION FOR MEASUREMENT OF PARTICULATE EMISSIONS FROM COMBUSTION SOURCES. VOLUME III
THERMO-SYSTEMS, INC., EPA, RESEARCH TRIANGLE PARK, N. C.
1972, 84 PP.
PB 233 393

SHE, C. Y.
LIGHT SCATTERING PARTICLE SIZING TECHNIQUES
SEMINAR: IN-STACK PARTICLE SIZING FOR PART. CONTROL DEVICE EVALUATIONS, EPA, RESEARCH TRIANGLE PARK, N.C. 1975, PP. 220-238
EPA-600/2-77-060

SHIFRIN, K. S., AND A. Y. PERELMAN
CALCULATION OF PARTICLE DISTRIBUTION BY THE DATA ON SPECTRAL TRANSPARENCY
PAGEOPH, 58, PP. 208-220, 1964

SHOFNER, F. M., G. KREIKEBAUM, H. W. SCHMITT, AND B. E. BARNHART
IN SITU, CONTINUOUS MEASUREMENT OF PARTICULATE SIZE DISTRIBUTION AND MASS CONCENTRATION USING ELECTRO-OPTICAL INSTRUMENTATION
5TH ANNUAL INDUSTRIAL AIR POLLUTION CONTROL CONFERENCE
KNOXVILLE, 1975, PAPER 75-41.1

SINCLAIR, D.
A PORTABLE DIFFUSION BATTERY: ITS APPLICATION TO MEASURING AEROSOL SIZE CHARACTERISTICS
AMER. IND. HYG. ASSOC. J., PP. 729-735, 1972

SINCLAIR, D., R. J. COUNTESS, B. Y. H. LIU, AND D. Y. H. PUI
EXPERIMENTAL VERIFICATION OF DIFFUSION BATTERY THEORY
J. OF APCA, 26 (7), PP. 661-663, 1976

SMITH, W. B., K. M. CUSHING, AND J. D. MCCAIN
PARTICULATE SIZING TECHNIQUES FOR CONTROL DEVICE EVALUATION
SOUTHERN RESEARCH INSTITUTE, EPA, RESEARCH TRIANGLE PARK, N. C., 1974, 127 PP.
EPA-650/2-74-102 PB 240 670

SMITH, W. B., K. M. CUSHING, AND J. D. MCCAIN
PROCEDURES MANUAL FOR ELECTROSTATIC PRECIPITATOR EVALUATION
SOUTHERN RESEARCH INSTITUTE, EPA, RESEARCH TRIANGLE PARK, N. C., 1977, 430 PP.
EPA-600/7-77-059

SONKIN, L. S.
A MODIFIED CASCADE IMPACTOR: A DEVICE FOR SAMPLING AND SIZING AEROSOLS OF PARTICLES BELOW ONE MICRON IN DIAMETER
J. OF IND. HYG. & TOXICOLOGY, 28 (6), PP. 269-272, 1946

SOOLE, B. W.
CONCERNING THE CALIBRATION CONSTANTS OF CASCADE IMPACTORS, WITH SPECIAL REFERENCE TO THE CASELLA MK. 2
AEROSOL SCI., 2, PP. 1-14, 1971

SPERTELL, R. B., AND M. LIPPMANN
AIRBORNE DENSITY OF FERRIC OXIDE AGGREGATE MICROSPHERES
AMER. IND. HYG. ASSOC. J., PP. 734-740, 1971

SPROULL, W. T.
EFFECT OF DUST CONCENTRATION UPON THE GAS-FLOW CAPACITY OF A CYCLONIC COLLECTOR
J. OF APCA, 16 (8), PP. 439-441, 1966

STAIRMAND, C. J.
THE DESIGN AND PERFORMANCE OF CYCLONE SEPARATORS
INST. OF CHEM. ENG., 29, PP. 356-383, 1951

STAIRMAND, C. J.
PRESSURE DROP IN CYCLONE SEPARATORS
ENGINEERING, 168, PP. 409-412, 1949

STENHOUSE, J. I. T., AND P. J. LLOYD
SAMPLING ERRORS DUE TO INERTIAL CLASSIFICATION
65TH ANNUAL MEETING AICHE, NEW YORK, N. Y., 1972, PAPER 30

STERN, S. C., H. W. ZELLER, AND A. I. SCHEKMAN
COLLECTION EFFICIENCY OF JET IMPACTORS AT REDUCED PRESSURES
I&EC FUNDAMENTALS, 1 (4), PP. 275-344, 1962

SUNDELOF, L. O.
ON THE ACCURATE CALCULATION OF PARTICLE-DISTRIBUTIONS IN AEROSOLS FROM IMPACTION DATA
STAUB REINHALTUNG DER LUFT, IN ENGLISH, 27 (8), PP. 22-28, 1967

SVAROVSKY, L., AND J. SVAROVSKA
A NEW ANALOGUE DATA ANALYSER FOR PARTICLE SIZE DISTRIBUTION MEASUREMENTS IN A DISC CENTRIFUGE
J. PHYSICS E: SCI. INSTR. 9, PP. 959-962, 1976

SWARTZ, D. R., M. B. DENTON AND J. L. MOYERS
ON CALIBRATING OF CASCADE IMPACTORS
AMER. IND. HYG ASSOC. J., PP. 429-439, 1973

VAN OSDELL, D. (COMPILER)
PROCEEDINGS: SEMINAR ON IN-STACK PARTICLE SIZING FOR PARTICULATE CONTROL DEVICE EVALUATION
RESEARCH TRIANGLE INST., EPA, RESEARCH TRIANGLE PARK, N. C.
1975, PP. 135-142
EPA-600/2-77-060

WHITBY, K. T., AND B. Y. H. LIU
GENERATION OF COUNTABLE PULSES BY HIGH CONCENTRATIONS OF SUB-COUNTABLE SIZE PARTICLES IN THE SENSING VOLUME OF OPTICAL COUNTERS
J. OF COLL. AND INTER. SCI., 25, PP. 537-546, 1967

WHITBY, K. T., AND R. A. VOMELA
RESPONSE OF SINGLE PARTICLE OPTICAL COUNTERS TO NONIDEAL PARTICLES
ENVIRON. SCI. & TECH., 1 (10), PP. 801-814, 1967

WHITBY, K. T., AND W. E. CLARK
ELECTRIC AEROSOL PARTICLE COUNTING AND SIZE DISTRIBUTION MEASURING SYSTEM FOR THE 0.015 TO 1 MICRON SIZE RANGE
TELLUS, 18, PP. 573-586, 1966

WILLEKE, K.
PERFORMANCE OF THE SLOTTED IMPACTOR
15TH AMER. IND. HYG. CONF., MINNEAPOLIS, MINN., PARTICLE TECH. LAB. PUB. 240, 22 PP., 1965

WILLEKE, K.
PERFORMANCE OF THE SLOTTED IMPACTOR
AMER. IND. HYG. ASSOC. J., 36 (9), 683-691, 1975

WILLEKE, K., AND B. Y. H. LIU
SINGLE PARTICLE OPTICAL COUNTER: PRINCIPLE AND APPLICATION
1975SYMP. ON FINE PARTICLES, MINNEAPOLIS, MAY 28-30, 1975
FINE PARTICLES: AEROSOL GENERATION, MEASUREMENT, SAMPLING AND ANALYSIS, PP. 698-729, 1976

WILLEKE, K., AND J. J. MCFETERS
THE INFLUENCE OF FLOW ENTRY AND COLLECTING SURFACE ON THE IMPACTION EFFICIENCY OF INERTIAL IMPACTORS
J. OF COLL. AND INTER. SCI., 53 (1), PP. 121-127, 1975

WILLIAMS, I., AND A. B. HEDLEY
THE CHOICE, DESIGN AND PERFORMANCE OF A MULTICHANNEL AEROSOL PARTICLE COUNTER
AEROSOL SCI., 3, PP. 363-375, 1972

WINKLER, P.
RELATIVE HUMIDITY AND ADHESION OF ATMOSPHERIC PARTICLES TO THE PLATES OF IMPACTORS
AEROSOL SCI., 5, PP. 235-240, 1974

WITTE, A. B., AND D. E. HAFLINGER
APPLICATION OF HOLOGRAPHIC METHODS TO THE MEASUREMENT OF FLAMES AND PARTICULATE, VOL. I
TRW SYSTEMS GROUP, EPA, RESEARCH TRIANGLE PARK, N. C.
1974, 69 PP.
EPA-650/2-74-034A PB 236 580

YAMAMOTO, G., AND M. TANAKA
DETERMINATION OF AEROSOL SIZE DISTRIBUTION FROM SPECTRAL ATTENUATION MEASUREMENTS
APPL. OPT. 8 (2), PP. 447-453, 1969

YUU, S., AND K. IINOYA
SEPARATION MECHANISM OF ROUND-NOZZLE CASCADE IMPACTOR-EFFECT OF CLEARANCE
KAGOKU KOGAKU (IN JAPANESE), 34, PP. 427-432, 1970

ZEBEL, G., AND D. HOCHRAINER
MEASUREMENT OF SIZE DISTRIBUTION OF FINE DUST WITH THE AID OF AN IMPROVED SPECTRAL IMPACTOR
STAUB REINHALTUNG DER LUFT, IN ENGLISH, 32 (3)
PP. 6-11, 1972

ZINKY, W. R.
A NEW TOOL FOR AIR POLLUTION CONTROL: THE AEROSOL PARTICLE COUNTER
J. OF APCA, 12 (12), PP. 578-580, 1962

6. OPACITY

AVETTA, E. D.
IN-STACK TRANSMISSOMETER EVALUATION AND APPLICATION TO PARTICULATE OPACITY MEASUREMENT
EPA-650/2-75-003 PB 243 402

BEUTNER, H. P.
MEASUREMENT OF OPACITY AND PARTICULATE EMISSIONS WITH AN ON-STACK TRANSMISSOMETER
J. OF APCA, 24 (9), PP. 865-871, 1974

COLLINS, K. E., AND D. J. STEELE
HIGH-SENSITIVITY RECORDING OPTICAL DENSITY METER
J. SCI. INSTR., 38, PP. 186-190, 1961

CONNER, W. D.
MEASUREMENT OF THE OPACITY AND MASS CONCENTRATION OF PARTICULATE EMISSIONS BY TRANSMISSOMETRY
EPA, RESEARCH TRIANGLE PARK, N. C., 1974, 39 PP.
EPA-650/2-74-128 PB 241 251

DOBBINS, R. A., AND G. S. JIZMAGIAN
OPTICAL SCATTERING CROSS SECTIONS FOR POLYDISPERSIONS OF DIELECTRIC SPHERES
J. OPT. SOC. AMER., 56 (13), PP. 1345-1350, 1966

ENSOR, D. S.
PLUME OPACITY MEASUREMENT
U.S.-U.S.S.R. WORKING GRP. STATIONARY SOURCE AIR POLLUTION CONTROL TECH. SYMP. SAN FRANCISCO, 1974, MR174-PA-1142

ENSOR, D. S., AND M. J. PILAT
CALCULATION OF SMOKE PLUME OPACITY FROM PARTICULATE AIR POLLUTANT PROPERTIES
J. OF APCA, 21 (8), PP. 496-501, 1971

ENSOR, D. S., AND M. J. PILAT
THE EFFECT OF PARTICLE SIZE DISTRIBUTION ON LIGHT TRANSMITTANCE MEASUREMENT
AMER. IND. HYG. ASSOC. J., 32, PP. 287-292, 1971

ENSOR, D. S., L. D. BEVAN, AND G. MARKOWSKI
APPLICATION OF NEPHELOMETRY TO THE MONITORING OF AIR POLLUTION SOURCES
67TH ANNUAL MEETING, APCA, DENVER, COLO., 1974, PAPER 74-110

ENVIRONMENTAL PROTECTION AGENCY
EPA REQUIREMENTS FOR SUBMITTAL OF IMPLEMENTATION PLANS, STANDARDS FOR NEW STATIONARY SOURCES
FEDERAL REGISTER, 40 (194), PP. 46240-46271, 1975

HERMANN, J., AND H. J. EIBERWEISER
THE INFLUENCE OF PARTICLE SIZE IN EXTINCTION MEASUREMENTS
STAUB REINHALTUNG DER LUFT, IN ENGLISH, 34, PP. 123-129
1974

HINKLEY, E. D., R. T. KU, K. W. NILL, AND J. F. BUTLER
LONG-PATH MONITORING: ADVANCED INSTRUMENTATION WITH A
TUNABLE DIODE LASER
APPL. OPT. 15 (7), PP. 1653-1655, 1976

HOOD, K. T.
OPACITY AND PARTICULATE EMISSION RELATIONSHIPS FOR PULP MILLS
NATIONAL COUNC. OF THE PAPER IND. FOR AIR AND STREAM
IMPROVEMENT, INC., 1976

KRAUS, F. J.
THE INFLUENCE OF FORWARD SCATTERING ON MEASUREMENTS OF THE
DEGREE OF TRANSMISSION OF AEROSOLS
STAUB REINHALTUNG DER LUFT, IN ENGLISH, 33 (9), PP. 341-345,
1973

LAMBIE, R.
IMPROVED SMOKE DENSITY RECORDER
J. OF SCI. INSTR. 37, PP. 174-146, 1960

LARSEN, S., D. S. ENSOR, AND M. J. PILAT
RELATIONSHIP OF PLUME OPACITY TO THE PROPERTIES OF PARTICULATES
EMITTED FROM KRAFT RECOVERY FURNACES
TAPPI, 55 (1), PP. 88-92, 1972

LITTLEWOOD, A.
MEASUREMENT OF THE OPTICAL DENSITY OF SMOKE IN A CHIMNEY
J. OF SCI. INSTR. 33, PP. 495-499, 1956

MASON, R. D.
EVALUATING PARTICULATE EMISSIONS PROBLEMS THROUGH OPACITY
MONITORING
LEAR SIEGLER, INC., 20 PP., 1970

MCRANIE, R. D.
EVALUATION OF SAMPLE CONDITIONERS & CONTINUOUS STACK MONITORS
FOR MEASUREMENT OF SULFUR DIOXIDE, NITROGEN OXIDES AND OPACITY
SOUTHERN COMPANY SERVICES, INC., 259 PP., 1975

NADER, J. S.
CURRENT TECHNOLOGY FOR CONTINUOUS MONITORING OF PARTICULATE
EMISSIONS
J. OF APCA, 25 (8), PP. 814-821, 1975

NADER, J. S., F. JAYE, AND W. CONNER
PERFORMANCE SPECIFICATIONS FOR STATIONARY SOURCE MONITORING SYSTEMS FOR GASES AND VISIBLE EMISSIONS
NATIONAL ENVIRON. RES. CTR, EPA, RESEARCH TRIANGLE PARK, N.C. 1974, 73 PP.
EPA-650/2-74-013 PB 230 934

PILAT, M. J.
PLUME OPACITY RELATED TO PARTICLE PROPERTIES
APCA-PNWIS MEETING, NOV. 1974

PILAT, M. J., AND D. S. ENSOR
PLUME OPACITY AND PARTICULATE MASS CONCENTRATION
ATMOS ENVIRON., 4, PP. 163-173, 1970

REISMAN, E., W. D. GERBER, AND N. D. POTTER
IN-STACK TRANSMISSOMETER MEASUREMENT OF PARTICULATE OPACITY AND MASS CONCENTRATIONS
PHILCO-FORD CORP., EPA, RESEARCH TRIANGLE PARK, N.C., 1974 115 PP.
EPA-650/2-74-120 PB 239 864

SCHNEIDER, W. A.
OPACITY MONITORING OF STACK EMISSIONS: A DESIGN TOOL WITH PROMISING RESULTS
GENERATION PLANBOOK, 3 PP., 1974

VINCENT, J. H.
EVALUATION OF A LIGHT TRANSMISSION TECHNIQUE FOR TESTING A TWO-STAGE ELECTROSTATIC DUST PRECIPITATOR
J. OF PHY. D: APPL. PHYS. 4, PP. 1835-1841, 1971

WOLF, P. C.
CONTINUOUS ACROSS-THE-STACK MEASUREMENT
ENVIRON. SCI. & TECH., 9 (3), PP. 221-225, 1975

7. ANALYTICAL TECHNIQUES

CAHILL, T. A.
CASCADE IMPACTOR DATA FOR ELEMENTAL ANALYSIS
SEMINAR-IN-STACK PARTICLE SIZING FOR PARTICULATE CONTROL DEVICE EVAL., EPA, RESEARCH TRIANGLE PARK, N.C. 1975, PP. 154-16
EPA-600/2-77-060

CAHILL, T. A., L. L. ASHBAUGH, J. B. BARONE, R. A. ELDRED, P. J. FEENEY, AND G. W. WOLFE
ANALYSIS OF RESPIRABLE FRACTIONS IN ATMOSPHERIC PARTICULATES VIA SEQUENTIAL FILTRATION
J. OF APCA, 27 (7), PP. 675-678, 1977

HULETT, L. D., J. M. DALE, J. F. EMERY, W. S. LYON, JR., AND W. FULKERSON
TECHNIQUES FOR CHARACTERIZATION OF PARTICULATE MATTER: NEUTRON ACTIVATION ANALYSIS, X-RAY PHOTOELECTRON SPECTROSCOPY, SCANNING ELECTRON MICROSCOPY
WORKSHOP-SAMPLING, ANALYSIS, AND MONITORING OF STACK EMISSIONS, EPRI SR-41, DALLAS, TEXAS, 1975, PP. 241-256

JACKO, R. B., D. W. NEUENDORF, AND K. J. YOST
TRACE METAL SAMPLES COLLECTED IN THE FRONT AND BACK HALVES OF THE EPA STACK SAMPLING TRAIN
J. OF APCA, 25 (10), PP. 1058-1059, 1975

JAKLEVIC, J. M., AND R. L. WALTER
COMPARISON OF MINIMUM DETECTABLE LIMITS AMONG X-RAY SPECTROMETERS
X-RAY FLUORESC. ANAL. ENVIRON. SAMPLES, PP. 68-75, 1977

JENSEN, B., AND J. W. NELSON
NOVEL AEROSOL SAMPLING APPARATUS FOR ELEMENTAL ANALYSIS
PROC. 2ND INTERNS CONF. "NUCLEAR METHODS IN ENVIRONMENTAL RESEARCH", U. OF MISSOURI-COLUMBIA, 1974

MAHAR, H.
EVALUATION OF SELECTED METHODS FOR CHEMICAL AND BIOLOGICAL TESTING OF INDUSTRIAL PARTICULATE EMISSIONS
MITRE CORP., EPA, RESEARCH TRIANGLE PARK, N.C., 1976, 84 PP.
EPA-600/2-76-137 PB 257 912

ROBERTS, N. J.
AEROSOL TRACE ELEMENT ANALYSIS USING NEUTRON ACTIVATION AND X-RAY FLUORESCENCE
LAWRENCE LIVERMORE LAB., U.S. AEC, 135 PP., 1974

SOWINSKI, E. J., AND I. H. SUFFETT
AN EXPERIMENTAL LABORATORY SYSTEM TO EVALUATE THE INDUSTRIAL FATE OF TOXIC VOLATILE INORGANIC HYDRIDES
AMER. IND. HYG. ASSOC. J., 38, PP. 353-357, 1977

8. CONTROL DEVICE EVALUATION-FIELD TESTS

BOSCH, J. C., M. J. PILAT, AND B. F. HRUTFIORD
SIZE DISTRIBUTION OF AEROSOLS FROM A KRAFT MILL RECOVERY FURNACE
TAPPI, 54 (11), PP. 1871-1875, 1971

BRADWAY, R. M., AND R. W. CASS
FRACTIONAL EFFICIENCY OF A UTILITY BOILER BAGHOUSE: NUCLA GENERATING PLANT
GCA CORP, EPA, RESEARCH TRIANGLE PARK, N. C., 1975, 148 PP.
EPA-600/2-75-031A PB 246 641

BRADY, J. D., F. N. HILL, AND K. M. GRAVES
USE OF INERTIAL IMPACTOR DATA TO SELECT AIR POLLUTION CONTROL EQUIPMENT
70TH ANNUAL MEETING, APCA, TORONTO, 1977, PAPER 77-42.4

BROOKS, D. A.
MEASUREMENT AND CHARACTERIZATION OF PARTICLES IN WET SCRUBBING PROCESS FOR SOX CONTROL
TRW SYSTEMS GROUP, EPA, WASHINGTON, D. C., 1975, 125 PP.
EPA-650/2-73-024 PB 225 083

BROWN, R. F.
PARTICULATE COLLECTION STUDY, EPA/TVA FULL-SCALE DRY LIMESTONE INJECTION TESTS
COTTRELL ENVIRON. SYSTEMS, INC., EPA, RESEARCH TRIANGLE PARK N.C., 1974, 197 PP.
EPA-650/2-74-053 PB 260 586

BURNS, E. A.
INSTRUMENTAL ANALYSES FOR WET SCRUBBING PROCESSES
TRW SYSTEMS GROUP FOR NAT'L ENVIRON. RES. CENTER, 1974
EPA-650/2-74-064 PB 240 616

BYERS, R. L.
PROCEEDINGS-SEMINAR: IN-STACK PARTICLE SIZING FOR PARTICULATE CONTROL DEVICE EVALUATION
EPA, RESEARCH TRIANGLE PARK, N. C., 1975, PP. 135-147
EPA-600/2-77-060

CALVERT, S., AND S. YUNG
EVALUATION OF ELECTROSTATIC SCRUBBER
A.P.T., INC., EPA, RESEARCH TRIANGLE PARK, N.C., 1975

CALVERT, S., C. JHAVERI, AND S. YUNG
FINE PARTICLE SCRUBBER PERFORMANCE TESTS
A.P.T., INC., EPA, RESEARCH TRIANGLE PARK, N. C., 1974,
269 PP.
EPA-650/2-74-093 PB 240 325

CARR, R., W. PIULLE, AND J. P. GOOCH
FABRIC FILTER AND ELECTROSTATIC PRECIPITATOR; FINE PARTICLE
EMISSION COMPARISON
ELECTRIC POWER RESEARCH INST., AMERICAN POWER CONF.,
CHICAGO, ILL., 1977, 39 PP.

CASS, R. W., AND J. E. LANGLEY
FRACTIONAL EFFICIENCY OF A STEEL MILL BAGHOUSE
GCA CORP., EPA
EPA

CASS, R. W., AND R. M. BRADWAY
FRACTIONAL EFFICIENCY OF A UTILITY BOILER BAGHOUSE: SUNBURY
STEAM-ELECTRIC STATION
GCA/TECH., EPA, RESEARCH TRIANGLE PARK, N.C., 1976, 244 PP.
EPA-600/2-76-077A PB 253 943

COOPER, D. W.
DYNACTOR SCRUBBER EVALUATION
GCA CORP. FOR NATIONAL ENVIRONMENTAL RESEARCH CENTER, 1975
116 PP.
EPA-650/2-74-083 PB 243 365

DENNIS, R., AND J. WILDER
FABRIC FILTER CLEANING STUDIES
GCA/TECH., EPA, RESEARCH TRIANGLE PARK, N. C., 1975, 438 PP.
EPA-650/2-75-009 PB 240 372

DISMUKES, E. G.
CONDITIONING OF FLY ASH WITH SULFUR TRIOXIDE AND AMMONIA
SOUTHERN RESEARCH INSTITUTE, EPA, RESEARCH TRIANGLE PARK, N.C
1975, 169 PP.
EPA-600/2-75-015 PB 247 231

ENSOR, D. S.
FIELD EXPERIENCE WITH CASCADE IMPACTORS: QUALITY CONTROL OF
TEST RESULTS
SEMINAR, IN-STACK PARTICLE SIZING FOR PARTICULATE CONTROL
DEVICE EVAL., EPA, RESEARCH TRIANGLE PARK, N.C. 1975, PP. 118-134
EPA-600/2-77-060

ENSOR, D. S., R. S. JACKSON, S. CALVERT, C. LAKE,
D. V. WALLON, R. E. NILAN, K. S. CAMPBELL, AND T. A. CAHILL
EVALUATION OF A PARTICULATE SCRUBBER ON A COAL-FIRED UTILITY
BOILER
METEROLOGY RES. INC., EPA, RESEARCH TRIANGLE PARK, N.C.
1975
EPA-600/2-75-074 PB 249 562

ENSOR, D. S., R. G. HOOPER, AND R. W. SCHECK
DETERMINATION OF THE FRACT. EFFIC., OPACITY CHARACTERISTICS,
ENG. & ECON. ASPECTS OF FABRIC FILTER OPERATING ON UTILITY BOILER
METEOROLOGY RESEARCH, INC., EPRI, PALO ALTO, CALIF
1976, 220 PP.

ESPLIN, G. J., R. S. SERENIUS, AND A. D. MCINTYRE
MEASUREMENT AND CHARACTERIZATION OF RECOVERY FURNACE
PARTICULATES. A STATUS REPORT
PULP AND PAPER MAGAZINE OF CANADA, 74 (12), PP. 98-104, 1973

FRANCONERI, P., AND L. KAPLAN
DETERMINATION AND EVALUATION OF STACK EMISSIONS FROM
MUNICIPAL INCINERATORS
J. OF APCA, 26 (9), PP. 887-888, 1976

FRASER, D. A.
THE COLLECTION OF SUBMICRON PARTICLES BY ELECTROSTATIC
PRECIPITATION
IND. HYG. QUARTERLY, PP. 75-79, 1956

HALL, R. R., AND R. DENNIS
MOBILE FABRIC FILTER SYSTEM DESIGN AND FIELD TEST RESULTS
GCA/TECHNOLOGY, EPA, RESEARCH TRIANGLE PARK,
N.C., 1975, 136 PP.
EPA-650/2-75-059 PB 249 514

HESKETH, H. E.
AEROSOL CAPTURE EFFICIENCY IN SCRUBBERS
68TH ANNUAL MEETING, APCA, SOUTHERN ILLINOIS UNIVERSITY AT
CARBONDALE, 1975

JACKO, R. B., D. W. NEUENDORF, AND F. VAURE
FACTIONAL COLLECTION EFFICIENCY OF ELECTROSTATIC PRECIPITATOR FOR
OPEN HEARTH FURNACE TRACE METAL EMISSIONS
ENVIRON. SCI. & TECH., 10 (10), PP. 1002-1005, 1976

JAMGOCHIAN, E. M., N. T. MILLER, AND R. REALE
TEST EVALUATION OF CAT-OX HIGH EFFICIENCY ELECTROSTATIC PRECIPITATOR
THE MITRE CORP., EPA, RESEARCH TRIANGLE PARK, N.C., 1975
103 PP.
EPA-600/2-75-037 PB 246 647

JOHNSON, L. D., AND R. M. STATNICK
MEASUREMENT OF ENTRAINED LIQUID LEVELS IN EFFLUENT GASES FROM SCRUBBER DEMISTERS
CONTROL SYSTEMS LAB., EPA, RESEARCH TRIANGLE PARK, N.C., 1974, 17 PP.
EPA-650/2-71-050 PB 233 739

KUTYNA, A. G.
COMPARISON OF SOURCE PARTICULATE EMISSION MEASUREMENT METHODS FOR COMBINATION FUEL-FIRED BOILERS
TECHNICAL BULLETIN 75, NATIONAL COUNCIL OF THE PAPER INDUSTRY FOR AIR AND STREAM IMPROVEMENT, INC., 1974, 35 PP.

MCCAIN, J. D.
EVALUATION OF A REXNORD GRAVEL BED FILTER
SOUTHERN RESEARCH INSTITUTE, EPA, RESEARCH TRIANGLE PARK, N.C
1976, 53 PP.
EPA-600/2-76-164 PB 255 095

MCCAIN, J. D.
EVALUATION OF ARONETICS TWO-PHASE JET SCRUBBER
SOUTHERN RESEARCH INSTITUTE, EPA, 1974, 43 PP.
EPA-650/2-74-129 PB 239 422

MCCAIN, J. D.
EVALUATION OF CENTRIFIED SCRUBBER
SOUTHERN RESEARCH INSTITUTE, EPA, RESEARCH TRIANGLE PARK, N.C., 1975
EPA-650/2-74-129A PB 243 626

MCCAIN, J. D., AND W. B. SMITH
LONE STAR STEEL STEAM-HYDRO AIR CLEANING SYSTEM EVALUATION
SOUTHERN RESEARCH INSTITUTE, M. W. KELLOG CO., EPA, RESEARCH TRIANGLE PARK, N. C., 1974, 43 PP.
EPA-650/2-74-028 PB 232 436

MCCAIN, J. D., J. P. GOOCH, AND W. B. SMITH
RESULTS OF FIELD MEASUREMENTS OF INDUSTRIAL PARTICULATE SOURCES AND ELECTROSTATIC PRECIPITATOR PERFORMANCE
J. OF APCA, 25 (2), PP. 117-121, 1975

MCKENNA, J.
APPLYING FABRIC FILTRATION TO COAL FIRED INDUSTRIAL BOILERS
A PILOT SCALE INVESTIGATION
ENVIRO-SYSTEMS AND RESEARCH INC., EPA, 1975, 203 PP.
EPA-650/2-74-058A PB 245 186

MCKENNA, J. D.
APPLYING FABRIC FILTRATION TO COAL FIRED INDUSTRIAL BOILERS
A PRELIMINARY PILOT SCALE INVESTIGATION
ENVIRO-SYSTEMS AND RESEARCH INC., NERD, 1974, 90 PP.
EPA-650/2-74-058 PB 237 117

NICHOLS, G. B., AND J. D. MCCAIN
PARTICULATE COLLECTION EFFICIENCY MEASUREMENTS ON THREE
ELECTROSTATIC PRECIPITATORS
SOUTHERN RESEARCH INSTITUTE, EPA,1975
EPA-600/2-75-056 PB 248 220

PILAT, M. J., AND F. MEYER
UNIV. OF WASH. ELECTROSTATIC SPRAY SCRUBBER EVALUATION
UNIVERSITY OF WASHINGTON, EPA, RESEARCH TRIANGLE PARK, N.C.,
1976, 74 PP.
EPA-600/2-76-100 PB 252 653

PILAT, M. J., G. A. RAEMHILD, D. L. HARMON
TEST OF UNIVERSITY OF WASHINGTON ELECTROSTATIC SCRUBBER AT AN
ELECTRIC ARC STEEL FURNACE
PROCEEDINGS-SYMP: PARTICULATE COLLECTION PROBLEMS USING ELEC-
TROSTATIC PRECIP. IN METALLURGICAL IND., DENVER, 1977, 259 PP.
EPA-600/2-77-208

PILAT, M. J.,
UNIV. OF WASH. ELECTROSTATIC SPRAY SCRUBBER EVALUATION
UNIV. OF WASHINGTON, EPA, RESEARCH TRIANGLE PARK, N.C.
1976, 77 PP.
EPA-600/2-76-100 PB 252 653

PRAKASH, C. B., AND F. E. MURRAY
COLLECTION OF KRAFT MILL PARTICULATES USING A CONDENSATION
MECHANISM
PULP & PAPER MAGAZINE OF CANADA, 74 (7), PP. 101-105, 1973

SCHWITZGEBEL, K.
DEVELOPMENT OF SAMPLING AND ANALYTICAL METHODS OF LIME/LIMESTONE
WET SCRUBBING TESTS
RADIAN CORP., EPA, RESEARCH TRIANGLE PARK, N.C., 1974, 76 PP.
EPA-650/2-74-024 PB 236 644

SEM, G. J.
SUBMICRON PARTICLE SIZE MEASUREMENT OF STACK EMISSIONS USING THE ELECTRICAL MOBILITY TECHNIQUE
ELECTRIC POWER RESEARCH INST., WORKSHOP-SAMPLING, ANALYSIS AND MONITORING OF STACK EMISSIONS, DALLAS, TEX. 1975, 16 PP.

SMITH, W. B., K. M. CUSHING, AND J. D. MCCAIN
PROCEDURES MANUAL FOR ELECTROSTATIC PRECIPITATOR EVALUATION
SOUTHERN RESEARCH INSTITUTE, EPA, RESEARCH TRIANGLE PARK, N. C., 1977, 430 PP.
EPA-600/7-77-059

SPENCER, H. W., III
RAPPING REENTRAINMENT IN A NEARLY FULL SCALE PILOT ELECTROSTATIC PRECIPITATOR
SOUTHERN RESEARCH INSTITUTE, EPA, RESEARCH TRIANGLE PARK, N. C., 1976, 178 PP.
EPA-600/2-76-140 PB 255 984

SPROULL, W. T.
MINIMIZING RAPPING LOSS IN PRECIPITATORS AT A 2000-MEGAWATT COAL-FIRED POWER STATION
J. OF APCA, 22 (3), PP. 181-186, 1972

STEELE, R. D., G. C. PAGE, AND G. L. MEENAGHAN
STACK SAMPLING OF HYGROSCOPIC PARTICULATES IN AN ENTRAINED WATER ENVIRONMENT
J. OF APCA, 25 (6), PP. 634-635, 1975

VINCENT, J. H.
EVALUATION OF A LIGHT TRANSMISSION TECHNIQUE FOR TESTING A TWO-STAGE ELECTROSTATIC DUST PRECIPITATOR
J. OF PHY. D: APPL. PHYS. 4, PP. 1835-1841, 1971

TECHNICAL REPORT DATA
(Please read Instructions on the reverse before completing)

1. REPORT NO. EPA-600/7-78-043	2.	3. RECIPIENT'S ACCESSION NO.
4. TITLE AND SUBTITLE Technical Manual: A Survey of Equipment and Methods for Particulate Sampling in Industrial Process Streams		5. REPORT DATE March 1978
		6. PERFORMING ORGANIZATION CODE
7. AUTHOR(S) W. B. Smith, P. R. Cavanaugh, and R. R. Wilson		8. PERFORMING ORGANIZATION REPORT NO.
9. PERFORMING ORGANIZATION NAME AND ADDRESS Southern Research Institute 2000 Ninth Avenue, South Birmingham, Alabama 35205		10. PROGRAM ELEMENT NO. EHE624
		11. CONTRACT/GRANT NO. 68-02-2131, T.D. 10904A
12. SPONSORING AGENCY NAME AND ADDRESS EPA, Office of Research and Development Industrial Environmental Research Laboratory Research Triangle Park, NC 27711		13. TYPE OF REPORT AND PERIOD COVERED Task Final; 2/77-1/78
		14. SPONSORING AGENCY CODE EPA/600/13

15. SUPPLEMENTARY NOTES IERL-RTP project officer is D. Bruce Harris, Mail Drop 62, 919/541-2557.

16. ABSTRACT The manual lists and describes the instruments and techniques that are available for measuring the concentration or size distribution of particles suspended in process streams. The standard, official, well established methods are described as well as some experimental methods and prototype instruments. To the extent that the information could be found, an evaluation of the performance of each instrument is included. The manual describes instruments and procedures for measuring mass concentrations, opacity, and particle size distribution. It also includes procedures for planning and implementing tests for control device evaluation, a glossary, and an extensive bibliography.

17. KEY WORDS AND DOCUMENT ANALYSIS

a. DESCRIPTORS	b. IDENTIFIERS/OPEN ENDED TERMS	c. COSATI Field/Group
Pollution	Pollution Control	13B
Industrial Processes	Stationary Sources	13H
Dust Control	Particulates	
Sampling		14B
Measuring		
Concentration		07D
Opacity		

18. DISTRIBUTION STATEMENT Unlimited	19. SECURITY CLASS *(This Report)* Unclassified	21. NO. OF PAGES 280
	20. SECURITY CLASS *(This page)* Unclassified	22. PRICE

EPA Form 2220-1 (9-73)