United States
Environmental Protection
Agency
Region 5

Waste Management Branch
230 South Dearborn Street
Chicago, Illinois 60604

May 1981
EPA 905/9-81-001

EPA

Madison Seminar Proceedings

Waste Management In Universities And Colleges

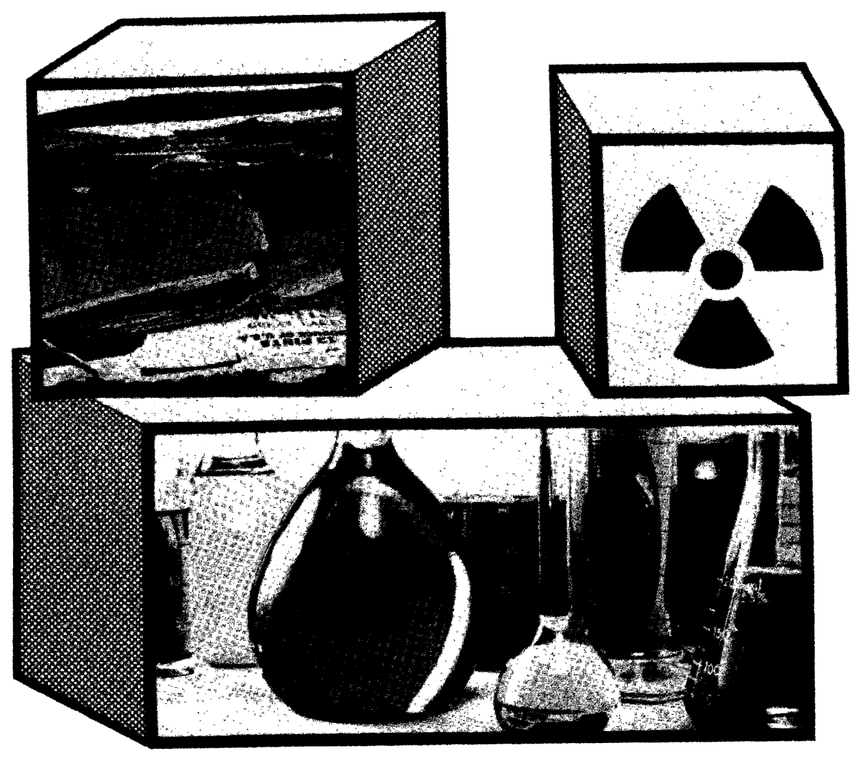

AN APPA PUBLICATION

WORKSHOP PROCEEDINGS
Waste Management in Universities
and Colleges

Madison, Wisconsin
July 9-11, 1980

Edited and prepared for publication by

PEDCo Environmental, Inc.
11499 Chester Road
Cincinnati, Ohio 45246

U.S. ENVIRONMENTAL PROTECTION AGENCY
REGION V
230 SOUTH DEARBORN STREET
CHICAGO, ILLINOIS 60604

Printed for EPA by the Association of Physical Plant Administrators of Universities and Colleges, a cosponsor of this seminar. Additional copies of this book are available from APPA, Eleven Dupont Circle, Suite 250, Washington, DC 20036 at $7.50 per copy, prepaid.

U.S. Environmental Protection Agency
Region V, Library
230 South Dearborn Street
Chicago, Illinois 60604

ABSTRACT

In response to a request from the Wisconsin Department of Natural Resources, Region V of the U.S. Environmental Protection Agency (EPA) sponsored a workshop on waste management in universities and colleges. The workshop was held at Madison, Wisconsin, from July 9 to 11, 1980. It consisted of four sessions: (1) Managing General University Waste/Regulatory Concerns, (2) Chemical Waste Management, (3) Low-Level Radioactive Waste, and (4) Research- and Hospital-Generated Waste. This report contains all workshop papers that EPA received for publication.

CONTENTS

	Page
Abstract	ii
1. Managing General University Waste/Regulatory Concerns	
Methods of Handling Nonhazardous Wastes at Colleges and Universities Larry A. Steinman	1-1
Energy Recovery--A Case Study of St. John's University, Collegeville, Minnesota Gordon G. Tavis	1-6
Legal Issues in Hazardous Waste Management Affecting Colleges and Universities Helen H. Madsen	1-14
Federal Hazardous Waste Regulations as They Apply to Colleges and Universities Eugene Meyer	1-20
2. Chemical Waste Management	
Introduction to Session on Chemical Waste Management John F. Meister	2-1
Initiation and Development of the SIU-C Hazardous Waste Program John F. Meister	2-6
Operation of the SIU-C Hazardous Waste Program John F. Meister	2-17
Sources and Identification of University-Generated Waste Henry H. Koertge	2-26
Packaging, Transportation, and Disposal of Wastes Off Campus R. R. (Dick) Orendorff	2-31

CONTENTS (continued)

Page

3. Low-Level Radioactive Waste

Introduction to Session on Low-Level Radioactive Waste 3-1
Warren H. Malchman

Application of Nuclear Regulatory Commission Regulations to University Waste Disposal Practices 3-3
Carl J. Paperiello

Safety Considerations in Disposal of Low-Level Radioactive Waste 3-7
A. J. Solari

Experiences With Various Disposal Methods at the University of Wisconsin-Madison 3-13
Elsa Nimmo

Experience With Incineration of Low-Level Radioactive Waste at the University of Illinois 3-18
Hector Mandel and Lorion J. Sanders

4. Research- and Hospital-Generated Waste

Waste Disposal at the Medical Center of the University of Illinois 4-1
Raymond S. Stephens

Case Study of Hospital Waste Management, University of Minnesota 4-7
Robert A. Silvagni

Hospital Waste Reduction at the University of Minnesota Hospitals 4-17
J. Michael Sprafka

Reaction Panel Notes: Session on Research- and Hospital-Generated Waste 4-21
Donald Vesley

Reaction Panel Notes: Session on Research- and Hospital-Generated Waste 4-22
Max J. Rosenbaum

Reaction Panel Notes: Session on Research- and Hospital-Generated Waste 4-23
Edwin H. Hoeltke

Reaction Panel Notes: Session on Research- and Hospital-Generated Waste 4-26
Harvey W. Rogers

SESSION 1

MANAGING GENERAL UNIVERSITY
WASTE/REGULATORY CONCERNS

METHODS OF HANDLING NONHAZARDOUS WASTES AT COLLEGES AND UNIVERSITIES

Larry A. Steinman

This paper concerns methods of handling nonhazardous solid wastes at colleges and universities. Waste characteristics are addressed because they affect present and future handling strategies, especially recovery of energy and materials. A nationwide telephone survey was conducted of 25 randomly selected schools to determine the current handling methods and their costs.

INTRODUCTION

Most colleges and universities generate an extremely varied waste stream consisting of both hazardous and nonhazardous wastes. The quantity and composition of these wastes depend upon factors such as the size of the campus, types of degrees offered, and extent of graduate and research programs. This paper is concerned with wastes from dormitories, cafeterias, and classrooms and all miscellaneous solid wastes not covered by the U.S. Environmental Protection Agency hazardous waste regulations promulgated on May 19, 1980. The distinction between nonhazardous and hazardous wastes is necessary because of the much higher cost of hazardous waste disposal (based on either weight or volume).

Before the Clean Air Act (CAA) of 1970, direct incineration was a common disposal alternative for many colleges and universities. Dormitory and physical plant incinerators were operated with little or no air pollution control equipment and were able to reduce total waste volume by roughly 75 percent. After the CAA standards went into effect, landfilling became the next most cost-effective disposal alternative because of the high cost of retrofitting air pollution control equipment to incinerators. As standards for landfills become more stringent and associated costs rise, onsite incineration with proper air pollution controls <u>and</u> energy recovery seems more attractive.

OPERATIONS IN SOLID WASTE HANDLING

College and university solid waste handling can be divided into four basic, interrelated operations: storage, collection, transport, and disposal.[1] Resource recovery, which includes recovery of materials and energy, can form various loops with the basic operations, depending on how the recovery program is structured.

Mr. Steinman is an Environmental Engineer with Region V of the U.S. Environmental Protection Agency.

Storage

The management of onsite storage is particularly important because most of the people who come into direct contact with the waste stream do so during this operation. The biodegradability of mixed solid wastes dictates regular removal from onsite storage containers. Containers holding organic wastes should be emptied each day. Equipment varies from ordinary corner wastebaskets to large containers that can store and compact more than 50 cubic yards of wastes. Public health, economics, access, and aesthetics are the prime considerations for storage equipment selection and placement.

Collection

The cost of collection, primarily labor, equipment, and equipment maintenance accounts for 50 to 75 percent of the total annual cost of solid waste management at colleges and universities. The collection schedule is dictated by the waste biodegradability, methods of storage, and efficiency of the equipment and labor. The trend appears to be toward reductions in labor and total mileage where possible. Large-capacity, front-loading compaction trucks (requiring one person) and rear- or side-loading trucks (requiring two persons) are favored when new equipment is purchased. Satellite systems, in which smaller vehicles transport campus waste to a central storage and compaction point before disposal, are gaining popularity. Electric satellite vehicles help reduce fuel consumption and thus fit well into the system if funds are available for capital expenditure.

Transport

Although large-capacity central storage containers may be used in the collection and transport process (especially when a private contract can be negotiated for container hauling and disposal), the majority of campus collection operations involve direct transport of the collected waste to final disposal. If a local municipality or private firm operates a transfer station, that facility can be used. Because most colleges and universities collect wastes in limited numbers of compaction vehicles, onsite transfer stations cannot be economically justified. The hauling distance to final disposal usually dictates the method of transport.

Disposal

Although landfilling is currently the most frequent method of disposal, resource recovery facilities (involving incineration with energy recovery) are increasing. Larger institutions are often viable markets for recovered energy, and a few universities are participating in local resource recovery efforts. The cooperation of the city of Ames, Iowa, with Iowa State University is an example. Projects of this nature are expected to increase.

WASTE CHARACTERISTICS

The composition of college and university solid wastes plays a large role in determining the handling system used. In studying the wastes generated in Monroe County, Indiana, the author separately performed a quantity and composition study of Indiana University's waste stream and determined the composition to be 53 percent mixed paper, 6 percent cardboard, 10 percent metal, 7 percent plastic, 7 percent glass, 9 percent food waste, 5 percent ash (some dormitory incinerators still operate

but are scheduled to close), and 3 percent miscellaneous materials (e.g., rubber products, textiles, and lawn trimmings). At this campus of 32,000 students, the waste generation per student varied between 1.0 and 1.5 lb/day. Compared with normal residential waste, the university's waste stream contained relatively more paper (especially if the majority of the ash was originally paper), plastic, and metal, but less food waste and miscellaneous materials. Generally, the moisture content (depending partly upon the storage and collection system) would average between 20 and 25 percent, whereas the estimated heating value of the waste stream would be 6000 Btu/lb.[2] This heat value is 25 percent greater than that of most municipal wastes, but 50 percent less than the general heating value of eastern coal and 15 percent less than the usual heating value of western coal. The average values are listed below:

Fuel	Heating value, Btu/lb
University wastes	6,000
Municipal wastes	4,500
Eastern coal	12,000
Western coal	7,000

The characteristics of college and university wastes are well suited to resource recovery. The high heating value makes incineration with energy recovery attractive, the wastes are clean (food waste is usually collected separately from the cafeteria), and the large quantities of recyclable products (e.g., bottles and cans) allow easy separation of materials. Also, the high population density of the university concentrates the waste stream in a reasonably small manageable area for collection and transport. Storage capacity, markets, and student participation must be evaluated in considering materials recovery. Although the sale of waste materials might not produce great revenue, it would help defray the costs of collection, transport, and disposal. Depending on the program, a weight reduction of 5 to 25 percent can be realized through separation of wastes.

NATIONAL SURVEY OF WASTE HANDLING METHODS AND COSTS

A nationwide telephone survey of 25 colleges and universities was conducted to determine general waste handling methods and costs. Enrollments at these institutions varied from 1,000 to 38,000 full-time students. Questions covered type of collection (in-house or private contract), costs, equipment used, and extent of recycling operations. When available, additional information was gathered about such matters as labor requirements, past handling practices, and general problem areas.

Although private contracting of waste collection and disposal is gaining popularity among municipalities because of supposed cost savings from more efficient operation, this trend was not noticed in the university survey. Approximately half the schools contacted provided their own collection and funded it as a line item of the school budget; 75 percent of these schools had more than 10,000 full-time students. Major factors that affect whether a school provides its own collection and disposal services are the amount of wastes, number of students, and past practices. In-house collection requires a large amount of wastes for efficient use of labor and equipment and large capital expenditures to begin or reequip a program.

Survey data indicate that bigger, often state-supported universities could collect wastes more cheaply by using their own staffs than by hiring private collectors. Also, in-house collection improved service and administrative control and enhanced campus security.

Approximately one-third of the institutions surveyed used private contractors for waste collection and disposal, which was funded as an annual budget line item: 85 percent of these colleges and universities were attended by fewer than 10,000 full-time students. Limited waste generation and capital investment constraints are the primary factors that make this option cost-effective for smaller schools. The ease of private contracting (i.e., much less complex administrative functions) is definitely a factor if in-house collection offers no readily apparent economic advantages. In places where more than one private contractor provides local services, occasional rebidding of the contract ensures a competitive situation.

More than 15 percent of the institutions surveyed used in-house personnel and private contractors to handle solid wastes. Generally, these colleges and universities operated satellite collection systems, in which wastes from individual storage containers were consolidated by school staff using multipurpose vehicles. Large, centrally located containers, usually compactor-equipped rolloffs, were used for central collection. Private contractors collected these containers and delivered them to the final disposal site. Although such systems are probably the most expensive means of waste handling, they are workable when disposal sites are far away. Larger schools use satellite collection systems the most, primarily to avoid large capital expenditures for equipment. Fewer than 5 percent of the colleges and universities surveyed used miscellaneous services, such as municipal or municipally contracted handling. Small schools (with 1,000 students or less) were most likely to have an alternative arrangement. Past practice appeared to be a major determinant in selecting a miscellaneous service, but other previously mentioned factors were significant.

Data show that waste handling costs ranged from $20 to $100 per ton. This wide range cannot be explained simply by variations in local situations (e.g., labor costs, disposal costs, and levels of services). Instead, the primary reason seems to be differences in recordkeeping and accounting. Equipment maintenance costs, for instance, may be recorded under general vehicle maintenance and thus may not appear in the waste management budget. Also, management and administrative duties may or may not be included in direct costs of solid waste handling. When all factors were considered, average handling costs were difficult to develop because of insufficient data. Nevertheless, an overall trend reflecting economies of scale was evident. The costs of waste handling per full-time student were generally less at larger institutions than at smaller ones.

RECOMMENDATIONS AND CONCLUSIONS

Colleges and universities should regularly analyze their methods of solid waste handling with an eye to the future. In considering a change, an institution should examine the situation at other schools that are anticipating or have recently made a similar change.

No arrangement is necessarily the best for all institutions or for one institution at all times. Because handling costs are currently increasing at roughly 15 percent per year, what is economical now may not be in the future. As landfilling becomes increasingly expensive, recovery of energy and materials will become more attractive.

REFERENCES

1. Tchobanoglous, G., H. Theisen, and R. Eliassen. Solid Wastes. McGraw-Hill, New York, 1977.

2. Mitchell, G. L., and C. W. Peterson. Small-Scale and Low Technology Resource Recovery. Prepared for the U.S. Environmental Protection Agency under Contract No. 68-01-2653, SCS Engineers, 1979.

ENERGY RECOVERY--A CASE STUDY OF ST. JOHN'S UNIVERSITY, COLLEGEVILLE, MINNESOTA

Gordon G. Tavis

In workshops held nationwide, the Environmental Protection Agency issued the following guidelines for anyone interested in the possibility of recovering energy from solid waste. Following these guidelines, St. John's University in Stearns County has instituted a program for energy recovery from solid waste. The step that St. John's is taking introduces and demonstrates to the region that such technological possibilities can be useful in many more places, raises the level of energy consciousness in the county and state, emphasizes source separation as the only feasible resource recycling approach available to those living in predominantly rural areas, takes a research stance to be involved in developing this technology to the fullest, and makes use of savings to enable the institution to be more competitive. This project demonstrates the St. John's service orientation in the following ways: to the county, by providing relief from its current landfill dilemma; to citizens, by offering what previously had been planned as a tax-supported public venture; to users, by providing a more stable, less costly, long-term solution for handling solid wastes; and to interested agencies, corporations, and individuals, by attempting a pilot project with currently available information and consulting assistance.

INTRODUCTION

Energy recovery at St. John's University is an unusual case study because it has only reached the equipment fabrication stage and the building that is involved is only now ready for bidding. The incinerator is scheduled to be fired up for testing in mid-1981. This case is being presented from the poststudy/planning point of view, but since it is in a preimplementation stage, we are unable to present firm conclusions.

First, I will describe the foundations at St. John's University upon which this project grew. Then I will detail the steps the Environmental Protection Agency (EPA) outlined for energy recovery projects. Finally, I will explain the latest innovations involving solid waste management in Stearns County and share with you our

Father Tavis is Treasurer of the Order of St. Benedict. He has held various positions at St. John's University, including Vice President for Administrative Services and Development and Prior of St. John's Abbey. He received a B.A. from St. John's University, completed divinity studies at St. John's Seminary, and earned a Master in Management at Massachusetts Institute of Technology.

hopes and expectations at St. John's, but at the same time point out the risks we are taking.

ST. JOHN'S UNIVERSITY

St. John's University is located at St. John's Abbey, which is out in the country. We provide our own water supply, fire protection, security, and wastewater treatment. We have a daytime population of about 3000 and nighttime population of about 2000. Coal has historically been our major energy source, although an oil-burning boiler was added in the early 1970's. Natural gas is not available.

A single centralized power plant provides all of the steam and domestic hot water and about one-fourth of the electrical needs of the campus. Northern States Power Company (NSP) supplies the remainder of the electrical power.

This free-standing, independent institution already has district heating and to a certain degree is already into cogeneration. A team of stationary engineers at the power plant has always given the highest level of service to our community. They are accustomed to handling the bulk of coal and to removing the ashes. They are also capable of maintaining the equipment and keeping it in service.

We probably could not have established economic feasibility without cogeneration. We certainly could not have done so had the district heating not been installed. The efficient power plant team was also a necessary part of the plan for energy recovery from solid waste.

EPA PROCEDURAL STEPS

In workshops held nationwide, EPA issued the following guidelines for anyone interested in the possibility of recovering energy from solid waste: (1) establish a market for the products to be produced, (2) determine that a sufficient supply of solid waste is available for the project under consideration, (3) make sure that financing is available, (4) examine the technology to determine the process best adapted to the project, (5) determine the size of the equipment, and (6) establish a procurement process.

Market

We first had to ascertain what product we could produce that would need marketing. In our case, the possibilities were limited because our needs are so small and we are so removed from other possible users. The only viable approach to consider was the one EPA calls Modular Combustion Unit (MCU). These incinerator units produce only steam, and the campus with its multiple steam uses was the market. Our steam uses include electrical generation, domestic hot water, dishwashing, clothes dryers, and a heated swimming pool. The steam demand varied from 5000 lb/hour in the summer to 55,000 lb/hour in the winter. Because demand was always over 15,000 lb/hour during the 9-month school year, it was concluded that we had a sufficient market. It should be mentioned that Pfeifer & Schultz/HDR were retained for the study and implementation of the project.

Supply

Fortunately for us, a three-county study had just been completed for Stearns, Sherburne, and Benton

Counties (November 1975). These counties had been studying the feasibility of locating a refuse-derived fuel plant in the area. They concluded that such a plant was not feasible because less than 300 tons/day of combustible waste was available.

From our viewpoint, the same study indicated that an ample supply of waste was available in Stearns County for an MCU at St. John's. The county board members agreed with us and on two different occasions passed resolutions encouraging St. John's to move ahead on the project. Finally on May 1, 1979, the county approved a license for the operation of an MCU at St. John's. Also, we were assured of county board support in achieving a full supply of solid waste.

Also to be considered are the issue of waste ownership and the establishment of authority concerning its use. From the start, we skirted this issue; St. John's was concerned strictly from the standpoint of energy. We obviously were not a governmental body worried about waste removal and able to set the charges accordingly. We realized that we would have to stay competitive with landfill operations if we were to maintain good relations with the haulers and local citizens. This put definite limits on our financing, but so far we have received cooperation from the independent haulers.

It has been suggested that wastewood from St. John's 2000 acres could be stored nearby and used as supplementary fuel, if we were to run low on solid waste. In addition, the MCU we have purchased would also allow coal to be mixed in with the waste.

Financing

Through the U.S. Department of Housing and Urban Development (HUD), a loan for $1,255,500 was granted for energy conservation through the reduction of fossil fuel consumption in dormitories and related facilities. A 3 percent, 40-year loan was authorized in two parts: $681,000 on September 29, 1977, and $574,500 on October 11, 1978. Thus, HUD not only made the financing available, but the advantageous terms of the loan have become a major factor in the project's financial feasibility.

Although grants for financing energy-saving projects are supposed to be readily available, they are hard to find. We have an application pending at U.S. Department of Energy under the title of "Synfuels, Solid Waste", which we hope will provide funding for the remainder of this $2,500,000 project.

We have recently become aware of the Entitlements Program of the Department of Energy. Through this program, the Federal Government pays a subsidy to all who burn alternate fuels. Although I have not been able to establish the exact dollar amount per ton, because it varies with the price of oil, it is estimated to be in the neighborhood of $4.50/ton of solid waste.

Technology

Because of its size, St. John's limited its study to MCU's. Even though EPA coined this generic term to include all incinerators in which solid waste might be burned and which may or may not involve energy recovery, we found that the companies in the field had very different approaches to the subject. Technologically, the companies were significantly different from one another. BASIC, CONSUMAT, KELLEY, and others build only according to their own specifications. In addition, patents

are pending in this field and a good deal of technical data are not transferable from one company to another and/or from manufacturing company to engineering firm.

St. John's approached this as a situation in which the decision was not between vendors, but between technologies. Because the products were not comparable, we concentrated our effort toward discerning which technology was the best for our job. We decided on BASIC Environmental Engineering, Inc., of Glen Ellyn, Illinois.

This equipment is designed for steam production. It has a combination of three heat recovery units: two boilers--a water-wall unit in the first combustion chamber and a water-tube unit following the third combustion chamber (each of these is made by Deltak, a Minnesota firm that specializes in waste heat recovery)--and an economizer, which follows the water-tube boiler.

Sizing

All of the variables of the study come into focus when an attempt is made to determine the size of the equipment. Consequently, size determination became the focal point for most of our calculations. Some of the variables considered were: steam demand, waste supply, capital cost, operational cost, rated capacities of the equipment, number of days per year the equipment could run, amount of auxiliary fuel, amount of excess steam, and size of building required to handle the equipment. Based on these and many other variables, we decided to translate each unit's ratings into a measure of financial feasibility for determining size of equipment and whether or not the project should be attempted.

In our approach, Boiler No. 6 at St. John's Power Plant was designated as the MCU. Savings would occur only by replacing coal and oil with solid waste. Other costs of operating the plant were left unchanged. To that total was added the estimated cost of operating and maintaining the incinerator plant while amortizing its debt. On the revenue side were tipping fees from the haulers and the savings resulting from a reduction in the cost of on-campus refuse removal. (The Entitlements Program would also add revenue.)

On the basis of various company ratings for their different sizes and models, a series of calculations were made to compare units under consideration. We added several conservative restraints to each of these calculations. The daily Btu availability was reduced 10 percent from 64 to 58 tons/day. The boiler's efficiency to produce steam was lowered 5 percent. It was further assumed that all temperatures used for the study were 5 percent too sanguine. A final 10 percent reduction was added to cover downtime that might occur over and above the planned monthly maintenance period. With this approach, the BASIC Model 3000 emerged as the system most able to handle the financial burden involved. This unit consumes 24 million Btu/hour in order to produce 17,000 lb steam/hour. If the solid waste is delivered to our plant at the quoted average of 4500 Btu/lb, then 64 tons/ day of waste will be burned at St. John's.

Procurement

The project was divided into two elements: that which BASIC would handle and that which Pfeifer and Shultz/HDR would handle. The BASIC contract included the incinerator, boiler, and connected input and

output systems. The Pfeifer and Shultz/HDR contract covered the building, the connections with the existing facility, and improvements leading to better electrical utilization.

The procurement process also includes a building permit from the township, a license to operate an MCU in Stearns County, a construction permit from MPCA, and a future operating permit from MPCA. The only remaining portions of the procurement process are contracts with haulers and with the landfill where residues will be taken and an operating permit from MPCA after testing is completed.

STEARNS COUNTY

We are located in a predominantly agricultural and dairy county. St. Cloud, the population center in the county, has an estimated 70,000 people in its metropolitan area. It is 12 miles from St. John's.

The landfill the county was relying on was recently designated out of compliance, and its operating permit is going to be revoked by MPCA within 1 year. The St. John's project has therefore become absolutely vital. In addition, the programs for source separation and composting, which we had briefly discussed with the county planner, have moved to a position of prominence. It will definitely take longer to implement these programs, but our county may eventually utilize a model for total resource recovery that involves recycling elements, composting organic matter that will help rebuild our agricultural topsoil, and incinerating the remainder for energy recovery.

RISKS

Many risks are associated with this project. Even the so-called proven elements of the technology are relatively new; the use of that technology for burning solid wastes is even newer; and inclusion of heat recovery is newer yet. Continuous-burn units are the very latest, and they have little or no operational history.

Because of the lack of historical information, this project involves many unanswered questions and additional risks. Planning has attempted, without success, to minimize all of these problems while maximizing uses for steam that exist over and above demand, potential Federal and state assistance, and relations with haulers and surrounding municipalities. The following list of questions is presented first to show that St. John's is undertaking this project with extreme caution; second, to provide a list for others to consider in their study of MCU's; and finally, to emphasize numerous elements St. John's will be attempting to analyze/describe/record once the equipment is fired up and functioning.

Waste Stream

1. Will the Btu content be at the national average? Will it be uniform?

2. Will the quantities of waste required always be available? Will they arrive in a smooth stream?

3. Will 5½ days of hauling be sufficient to enable 7 days of burning?

4. Will the noncombustible content exceed expectations?

5. Will there be unusual amounts of corrosive substances? Will it be possible for the operator to recognize and eliminate them?

6. Will we regret not separating and/or have to install such equipment later?

Equipment

1. Will this incinerator with waterwall and watertube boiler be as durable as the BASIC incinerators already in existence?

2. Will the preventive maintenance program planned be sufficient or will it require more shutdowns?

3. Will downtime for handling crises exceed our estimates?

4. Will the efficiency rating of the boiler and the Btu requirements of the furnace prove reliable?

5. Will the steam production be steady enough for electrical generation?

6. Will auxiliary fuel requirements exceed expectations?

7. Will glass slagging plague us?

8. If the front-end loaders are "the weakest link," will two be able to provide uninterrupted service?

9. Since this is the first BASIC Modular Combustion Unit dedicated strictly to solid waste, will it meet MPCA standards?

10. Will internal and external ash removal elements perform in harmony with and with the same efficiency as the remainder of the unit?

Building

1. Will the tipping floor be large enough to handle the 7-day burn volume, if average Btu content of the waste is dramatically below the quoted national average of 4500 Btu/lb?

Ash Disposal

1. Will ash require sanitary landfill?

2. Will weight and/or volume of the ash exceed expectations?

Governmental Regulations

1. Will future regulations be even more restrictive? Will they be retroactive?

2. Will restrictions be placed on the waste stream? How will such regulations affect the Btu content?

3. Will state-imposed district or regional arrangements interfere with the assurances present in the Stearns County Solid Waste Plan?

Financial Feasibility

1. Will usable steam calculations hold true?

2. Will coal boilers have to be idling more than planned?

3. Will inflating coal costs actually prove to be 3 percent above the quoted inflation rates of the future?

4. Will the tipping fee used in calculations be acceptable?

CONCLUSION

In spite of these risks, St. John's University is still taking this step because it appears feasible and advantageous from an economic viewpoint. The St. John's community is willing to take this step because it is evidence of what the community preaches: energy conservation, simple lifestyle, and stewardship. It points to dedication to education, introduces and demonstrates to the region that such technological possibilities can be useful in many more places, raises the level of energy consciousness in the county and state, impacts a campaign for source separation as the only feasible resource recycling approach available to those living in predominantly rural areas, takes a research stance with this project to be involved in developing this technology to its fullest, and makes use of savings to enable the institution to be more competitive.

Finally, this project demonstrates the service orientation of the people at St. John's to the county, by providing relief from its current landfill dilemma; to citizens, by offering from a private source what previously had been planned as a tax-supported public venture; to users, by providing a more stable, less costly, long-term solution for handling solid wastes; and to interested agencies, corporations, and individuals, by attempting a pilot project with available information and consulting assistance.

It will be interesting to track this project through its last months of fabrication, construction, startup, and testing; to check back as St. John's verifies the data that of necessity had to be estimated; to witness the working out of the risks; and to visit the site and operation once operations are under way.

The following tables show capital expenditures and operating budget for this project.

CAPITAL EXPENDITURES AS OF 10/28/80

Construction costs:	
Building and equipment	$2,033,457
Site improvement	129,472
Utility connections	75,000
	$2,237,929
Architectural and engineering costs	$ 200,000
Legal and administrative	22,000
Interest during construction	56,000
Project contingency (2%)	22,000
	$2,537,929

OPERATING BUDGET OF INCINERATOR PLANT

Process equipment maintenance	$ 30,000
Power plant connections maintenance	4,000
Instrumentation maintenance	1,500
Utility maintenance	2,100
Scale maintenance	1,000
Building and grounds	3,600
Auxiliary fuel	50,000
Rolling equipment	18,000
Insurance	2,500
Ash disposal	25,000
Labor	
40 operators	60,000
Fringes	7,600
HUD loan repayment	64,800
	$ 270,100

LEGAL ISSUES IN HAZARDOUS WASTE MANAGEMENT AFFECTING COLLEGES AND UNIVERSITIES

Helen Madsen

Colleges and universities should become familiar with laws and regulations concerning the generation of hazardous wastes at their facilities. These institutions should be aware of petitioning procedures that must be followed in regard to wastes generated on site. Provisions should be noted of any law enabling the Environmental Protection Agency to grant exemptions and variances.

APPLICABLE STATE AND FEDERAL LAWS AND REGULATIONS CONCERNING HAZARDOUS WASTE MANAGEMENT

First, you should be familiar with the laws and regulations that apply to hazardous waste management at your institution. Determine if you are dealing only with state laws or both state and Federal laws. Be aware that your state may already have or soon will have a hazardous waste management act. For example, Illinois already has regulations.

You should become generally familiar with state statutes. There may or may not be one designed to implement the minimum requirements of the Federal Resource Conservation and Recovery Act (RCRA) of 1976. For example, a Wisconsin statute (sec. 144.60 ff., Wis. Stats., effective May 21, 1978) provides that all persons (person means owner or operator, corporation, association, or state agency) who store, transport, treat, or dispose of hazardous wastes must obtain a license from the Department of Natural Resources.

You should pay particular attention to provisions of any such law regarding powers of the Environmental Protection Agency (EPA) to grant exemptions and variances (secs. 144.62(5) and 144.64(b), Wis. Stats.) because you may have to consider applying for relief from the most stringent provisions of the state law or regulations.

You need to find out whether your state already does or shortly will have a hazardous waste management program that qualifies for interim authorization from EPA. If so, in

Ms. Madsen is Assistant Director of the Office of Administrative Legal Services at the University of Wisconsin-Madison. Her experience includes private general practice in several states and service as an attorney to the Naval Ship Systems Command. She holds an A.B. from Mount Holyoke College, and a J.D. from Cornell Law School.

the long run (after the next 6 to 10 months) you will be dealing primarily with state environmental protection authorities who will be implementing the Federal hazardous waste management regulations. In the short run (over the next 6 to 10 months) you probably will be dealing with both state and Federal agencies.

If your state does not anticipate receiving early (by the end of 1980) interim authorization for its program, it will be entering into a cooperative arrangement with EPA that specifies the respective responsibilities of Federal and state authorities until authorization of the state program. If you are in one of these states, you or your institution's attorney should try to obtain a copy of the cooperative agreement. Institutions in these states should continue to deal with both state and Federal agencies until EPA authorization is obtained; such an arrangement may involve considerable overlapping of enforcement and reporting.

AVOIDING DISCLOSURE TO EPA OF UNPUBLISHED RESEARCH DATA

As a second issue, you should be aware of potential problems under the Code of Federal Regulations (CFR) regarding disclosure of unpublished research data (see 40 CFR sec. 260.2, 40 CFR sec. 2.203 and sec. 2.208 ff). For example, when dealing with a waste that is not listed as hazardous but that may have one of the four hazardous characteristics (ignitability, corrosivity, reactivity, and extraction procedure toxicity), an institution must decide what records will be kept as evidence of the determination of whether the waste is hazardous. The institution must also decide who will keep such records. You will need to obtain waste and test records or other information, such as scientific references, to establish the characteristics of the waste (see 40 CFR sec. 262.11, p. 33143, May 19, 1980). In some cases, the institution may decide to have the researcher keep such records.

As you may know, college and university researchers are quite reluctant to disclose any information or data regarding their research prior to publication in a scholarly journal or book. Most university researchers believe that a scientist should not be compelled to disclose the results of his/her research until the scientist is satisfied as to the accuracy, reliability, and therefore the scientific significance of the data. The decision to publish and the acceptance for publication after peer review are the best indication of the accuracy of the raw research data. Furthermore, research data often are owned by the researcher and not the university. I suspect that all of your institutions have strong policies supporting the scientist's position on nondisclosure and his or her rights to the data.

Therefore, if you anticipate having researchers keep records for the purposes of your hazardous waste management program, I believe you should urge the researchers to keep the hazardous waste records physically separate and distinct from their research data. As a participant in the hazardous waste management program, the professor will be acting as an authorized university official implementing a program and not as a scientific researcher. If records on hazardous waste are kept in lab notebooks where research data are also kept, there is risk of disclosure of the research data to the government and therefore ultimately to the public. By keeping these data

together, at the very least you run a clear risk of a dispute with the government auditors over what can or cannot be released or disclosed to them.

The Federal Freedom of Information Act (FOIA) requires the Federal Government to make available to the public, upon request, any information in the Government's possession, unless the information comes within certain narrow exceptions, e.g., business confidentiality. The EPA Hazardous Waste Regulations (40 CFR sec. 260.2) provide that any such information provided to EPA will be made public unless a claim of business confidentiality is asserted. Once that claim is asserted, however, Government lawyers, not your university, must decide what is confidential. I suggest that you avoid complicated legal issues regarding what is confidential research information under the FOIA by keeping research data physically separate from hazardous waste records. If this is done, your university and its researchers may be saved valuable time in trying to resolve legal issues with the Federal Government on nondisclosure of research data.

ONSITE AND OFFSITE TRANSPORTATION AND DISPOSAL OF HAZARDOUS WASTES AS DEFINED IN THE REGULATIONS

Onsite is defined as contiguous property (properties that border on one another) owned by a college or university, which may be divided by a public or private right-of-way where access is only by crossing, or non-contiguous property connected by a private right-of-way to which the public has no access (see 40 CFR sec. 260.10(48), p. 33075, May 19, 1980 Fed. Reg.). Offsite is defined as movement of hazardous wastes along, as opposed to across, a public right-of-way.

If it is possible to transport and treat or dispose of your hazardous waste onsite (and this may be possible for institutions that are small in size, or not geographically spread out, or for those moving hazardous wastes only a short distance), then you need not use the manifest system described in 40 CFR Part 263.

If you transport, treat, and dispose of hazardous waste onsite, you must obtain an EPA identification number for your facility, keep records of test results for 3 years, and follow Part 264 or 265 of the regulations for treatment or disposal facilities, which includes knowing amounts, assuring proper disposal, and instituting certain detailed safeguards in the event of emergencies and to prevent accidents.

REQUIREMENTS FOR DISPOSAL OF HAZARDOUS PESTICIDE WASTES AT INSTITUTIONS WITH FARMS (see 40 CFR sec. 262.51)

The farmer must rinse containers three times and comply with disposal instructions on the pesticide labels.

HOW TO AVOID BECOMING A STORAGE FACILITY IF YOUR INSTITUTION IS A GENERATOR OF HAZARDOUS WASTE BUT HAS LITTLE OR NO ONSITE DISPOSAL

Any generator of hazardous wastes that accumulates those wastes for more than 90 days is treated as the operator of a storage facility and must meet the expensive provisions of 40 CFR Part 264 or 265 (how to store safely) and become a licensed storage facility under Part 122.

Your institution can avoid becoming a storage facility by adhering to the following:

Ship all hazardous waste offsite within 90 days after it starts to accumulate.

Mark on the container the date the hazardous wastes starts to accumulate for purposes of the 90-day period.

Place the waste in containers or tanks that comply with the regulations.

Label and mark each container according to 40 CFR secs. 262.31 and 262.32 (in accordance with U.S. Department of Transportation (DOT) regulations)

Comply with the preparedness and prevention procedures (40 CFR secs. 265.30 through 265.37), contingency plan and emergency procedures (secs. 265.50 through 265.57), and personnel training provisions (sec. 265.16). (Also, see 40 CFR sec. 262.34.)

PROCEDURES AVAILABLE TO INSTITUTIONS SEEKING EXCEPTIONS TO OR CHANGES IN THE FEDERAL REGULATIONS

First, you may petition that a particular waste at an individual facility be excluded from the lists of hazardous wastes given in 40 CFR sec. 261.30 or 261.33 on the grounds that the waste is not hazardous to human health or the environment as it is handled in your facility. You may also use this petition to exclude a waste from the definition of a hazardous waste, even though it has been so defined as a result of the mixing of a solid waste with a hazardous waste (see sec. 261.3 on definition of hazardous wastes). The basic procedural steps are:

The facility makes a petition to EPA.

Through sampling and testing, it is proven that the waste does not meet the criteria for being listed as a hazardous waste or as having any hazardous waste characteristics.

The Administrator of EPA makes a tentative decision, publishes it in the Federal Register, and gives to any interested person requesting it an informal hearing on the petition.

A final decision is issued after any such hearing.

The full burden of obtaining an exclusion is on the generator or disposal facility. If chemical wastes are being generated on a recurring basis, your institution should consider this procedure to exclude wastes. (See 40 CFR sec. 260.22.)

A second procedure for seeking exceptions is to petition for equivalent testing or analytical methods. Testing is required of generators and disposal facilities under Parts 261, 264, and 265. You may decide that a less-expensive alternative testing method performs as well as the specified test. Sections 260.20 and 260.21 provide a method to petition for the approval of your alternate testing method. Again the clear burden of proof is on the petitioner.

A third way to seek an exception is under the general rulemaking petition provision (40 CFR sec. 260.20, p. 33076, May 19, 1980 Fed. Reg.). This provision allows anyone to petition

for a change in any provision in Parts 260 through 265 of the regulations.

The petitioner must demonstrate the need and justification for the proposed action. Most likely such a procedure would be too time-consuming and expensive for one institution to undertake; however, I urge your institution to send any serious concerns you have with the regulations to the American Council on Education (ACE). If many institutions of higher education have the same concern, a petition for regulatory change or an interpretation could be instituted by ACE.

Finally, the comments to the Federal Register (Part 261 p. 33088-9, May 19, 1980) states that EPA wishes to be informed of situations in which strict application of the regulations has unintended results. I assume a letter to EPA would satisfy this request. If you write such a letter, send a copy of it to ACE in Washington. In appropriate cases, EPA would react to problems by providing regulatory amendments, interpretive guidance, and reasonable implementation and enforcement procedures.

KINDS OF ENFORCEMENT PROCEDURES AND LEGAL REMEDIES AVAILABLE TO EPA AND STATE ENVIRONMENTAL PROTECTION AGENCIES SEEKING COMPLIANCE

The Federal Resource Conservation and Recovery Act (RCRA) states that EPA may take administrative action to enforce the Act. The Administrator issues a notice to the violator, who then has 30 days to comply with conditions specified in the notice. If the notice is not obeyed, the Administrator issues a compliance order or asks the U.S. Attorney to sue the violator in Federal District Court. The Administrator must give notice to the state (in cases involving an EPA-authorized program) 30 days prior to issuing the order. The violator must comply within the time given or seek an adminstrative hearing within 30 days to explain its position on why the order is not appropriate. The Act provides for a civil penalty of up to $25,000 per day for each violation. Any facility determined a violator could lose any permit issued by the EPA or state environmental protection agency.

The Act also provides for criminal penalties. It is an offense to knowingly do the following:

> Transport hazardous waste to a facility that does not have a Federal or state permit.
>
> Dispose of hazardous waste without a permit.
>
> Make false statement or representation on a manifest, record, or permit application.

The penalty is up to $25,000 per day for each violation, or imprisonment up to 1 year, or both. The U.S. Attorney would institute any criminal action in Federal court.

You should consult your state law for enforcement procedures available to your state agency. (For example, the remedies and penalties in sec. 144.73, Wis. Stats., parallel those in the Federal act.)

FINANCIAL RESPONSIBILITY REQUIREMENTS

Federal hazardous waste regulations (as proposed in 40 CFR sec. 265.140 ff., p. 33260, May 19, 1980 Fed. Reg.) provide financial responsibility requirements for owners and operators of facilities that treat, store, or dispose of hazardous

wastes. Storage is defined as holding in a tank, container, waste pile, or surface impoundment. Treatment is defined as incineration or chemical, thermal, or other physical treatment (p. 33228, May 19, 1980, Federal Register). Disposal is defined as underground injection, landfill, or land treatment. (These are not final regulations; the comment period is until July 18, 1980.)

Section 265.1 states that the financial requirements apply to all owners and operators who have complied with requirements for interim status. State requirements will apply when your state receives an authorized hazardous waste program.

The Federal statute provides that you can obtain interim status (be a licensed facility) by fulfilling three requirements:

1. Own and operate a facility that was in existence on October 21, 1976.

2. By August 18, 1980, file a preliminary notification with EPA; state that you are an owner or operator of a treatment, storage, or disposal facility for hazardous wastes, give the location and a general description of your activities, and state the identified or listed hazardous wastes handled by your institution.

3. Make an application to EPA for a permit.

Once you have interim status as a licensed facility, under the proposed regulations your institution must provide financial assurance for the eventual closure of your facility. If you are a disposal facility, you must also provide financial assurance for post-closure monitoring and maintenance.

If you have no landfill or land treatment procedure, but either store (hold over 90 days) or treat hazardous waste (e.g., incinerate hazardous wastes), then only sec. 265.143 applies. Under the proposed regulations, you must do one of the following:

Provide a closure trust fund with a bank or other financial institution.

Provide a surety bond guaranteeing performance of closure.

Provide a standby letter of credit assuring funds for closure.

Provide more than one type of financial instrument.

Meet a financial test for closure, e.g., at least $10 million in net worth.

If you are a municipality, meet a revenue test.

For those of you who represent state institutions, the proposed regulations do not specify financial responsibility, but the comments say that where a state assumes legal or financial responsibility for closure or liability coverage for the facility, the owner or operator would be exempt from Federal financial requirements. Your state institution, as part of the state, is most likely legally and financially covered for any possible closure of your hazardous wastes facility.

You may wish to discuss this matter with your institution's risk manager so that he or she can become aware of the new potential liabilities.

FEDERAL HAZARDOUS WASTE REGULATIONS AS THEY APPLY TO COLLEGES AND UNIVERSITIES

Eugene Meyer

On May 19, 1980, the Environmental Protection Agency promulgated a complex set of regulations under the provisions of the 1976 Resource Conservation and Recovery Act (RCRA) passed by the U.S. Congress. These regulations establish "cradle-to-grave" control over the generation, transportation, and disposal of hazardous waste. This article reviews how these regulations apply to the hazardous waste practices at colleges and universities that generate large amounts of such waste.

Each year colleges and universitites generate significant amounts of hazardous waste. For decades these wastes probably have been discarded in the same careless fashion as those in the various manufacturing and processing industries--often just dumped in quarries, nearby waterways, and local landfills. The results of such improper disposal of hazardous wastes are now becoming evident in every sector of our Nation. Public drinking water supplies and irreplaceable aquifers have been destroyed, surface waters have been rendered unusable, fires and explosions have threatened whole communities, and the health and safety of untold numbers of people have been threatened by exposure to pollutants in our air, soil, and water.

The U.S. Environmental Protection Agency (EPA) has recently initiated a major program that aims to rectify this untenable state of affairs. On May 19, 1980, EPA promulgated a complex set of regulations under the provisions of the 1976 Resource Conservation and Recovery Act (RCRA) passed by the U.S. Congress. These regulations establish "cradle-to-grave" control over the generation, transportation, and disposal of hazardous waste. Such control is accomplished by imposing recordkeeping and reporting requirements on generators and transporters of hazardous waste, establishing a manifest system to track shipments of hazardous wastes, and using proper labels and containers. The regulations further require that the waste be delivered to properly permitted treatment, storage, and disposal facilities. The intent of Congress is to require industry to change its

Dr. Meyer is a Regional Expert on hazardous waste management with U.S. EPA Region V. He formerly served as Professor of Chemistry and Chairman of the Division of Natural Sciences at Lewis University. His publications include a text on the chemistry of hazardous materials. He holds a Ph.D. from Florida State University and has done postdoctoral work at the Institute for Nuclear Physics Research in Amsterdam.

bad practices and to insure the safe management of hazardous waste with a minimum amount of economic disruption. The Act does not specify industry alone, however; all generators, transporters, disposers, or treaters of hazardous waste are affected by the regulations. The purpose of this article is to review how these regulations apply to hazardous waste practices at colleges and universities.

The first question we need to ask is: Does a specific college or university generate hazardous waste? The answer to this question depends upon several factors. Let's first examine what EPA means by a solid waste. The Agency defines solid waste as any garbage, refuse, sludge, or other waste material. The last category includes any solid, liquid, semi-solid, or contained gaseous material resulting from industrial, commercial, mining, agricultural, or community activities that is discarded or is being accumulated, stored, or physically, chemically, or biologically treated prior to being discarded; or is sometimes discarded after having served its original intended use; or is a manufacturing or mining by-product that is sometimes discarded. The Agency also excludes the following materials from the solid waste classification: domestic sewage, wastes that mix with domestic sewage in a sewer system before entering a publicly owned treatment works; industrial wastewater discharged from point sources that are subject to regulation under the Clean Water Act; and source, special, nuclear, or by-product materials defined by the Atomic Energy Act of 1954.

Once a college or university decides that it is a generator of solid waste, the next step is to determine whether that waste is hazardous under the RCRA regulations. This can be done by one of three procedures. First, the generator may simply proclaim the solid waste to be hazardous; this might be done if the generator believes the waste is likely to substantially endanger human health and the environment. Second, the college or university may test a representative sample of the waste to determine if it exhibits any of the characteristics that EPA has defined as belonging to a hazardous waste; that is, is the waste ignitable, corrosive, chemically reactive, or EP toxic (based on extraction procedure)? These features of a solid waste are discussed in the following paragraphs.

Ignitability

A solid waste is considered ignitable if it is (1) a liquid with a flash point of less than 60°C (excluding solutions containing less than 24 percent alcohol by volume); (2) capable under standard temperature and pressure of causing fire through friction, absorption of moisture, or spontaneous chemical changes, and when ignited, burns so vigorously and persistently that it causes a hazard; (3) an ignitable compressed gas; or (4) a strong oxidizer.

Corrosivity

A solid waste is corrosive if it is aqueous and has a pH less than or equal to 2, or greater than or equal to 12.5; or is a liquid and corrodes steel at a rate greater than 6.35 mm per year at a test temperature of 55°C.

Chemical Reactivity

A solid waste is considered chemically reactive if it is normally unstable and readily undergoes violent changes without detonating; reacts violently with water; forms potentially explosive mixtures with water; generates toxic gases, vapors, or fumes when mixed with water in a quantity sufficient to present a danger to human health or the environment; contains cyanide or sulfide in a sufficient quantity to generate harmful gases when exposed to pH conditions between 2 and 12.5; is capable of detonation or explosive reaction when exposed to a strong initiating source or heated under confinement; or is readily capable of detonation or explosive decomposition or reaction at standard temperatures and pressures.

EP Toxicity

The toxicity of solid wastes is evaluated by using an extraction procedure (EP) developed by EPA and designed to identify wastes that, if improperly managed, are likely to leach hazardous concentrations of 14 toxic constituents into the groundwater. These contaminants are arsenic, barium, cadmium, chromium, lead, mercury, selenium, silver, endrin, lindane, methoxychlor, toxaphene, 2,4-D, and 2,4,5-TP silvex. A solid waste is considered EP toxic if the concentration of any of these contaminants in a waste sample exceeds 100 times the levels specified in the drinking water regulations.

The third procedure by which a college or university may establish whether or not their waste is classified as hazardous by the RCRA regulations is to determine if the waste contains any of the 745 substances the EPA lists as hazardous. The first of the four lists of hazardous substances covers 16 types of hazardous waste generated from nonspecific sources and includes such wastes as spent plating bath solutions from electroplating operations. The second list covers 69 wastes from specific industries; 22 entries are under the organic chemistry industry alone, and include such processes as the centrifuge residue from toluene diisocyanate production and distillation bottoms from the production of nitrobenzene. The remaining two lists are more extensive and more generally applicable. One includes the generic name (and tradename, when known) of certain substances that the EPA has designated as acutely hazardous; the other covers 239 substances that are considered toxic.

An important facet of the regulations as they apply to colleges and universities is the small-quantity exclusions. Those generators that produce a total of less than 1000 kg (2200 lb) in any calendar month do not need to notify the EPA of their activities concerning hazardous wastes; that is, only those generators that accumulate greater than 1000 kg of hazardous waste are subject to regulation. The generator must ensure, however, that the hazardous waste is disposed of at facilities the State has approved for the handling of municipal or industrial wastes. Furthermore, small generators must also comply with the hazardous waste regulations if they accumulate more than 1 kg of any of the substances listed as acutely hazardous.

Because small generators are exempt from the regulations, RCRA will not apply to about 91 percent of the hazardous waste producers in this Nation. This 91 percent includes numerous small businesses, such as gas stations and many of the small colleges and universities who create only 1 percent of the waste targeted to be covered by these regulations. Although environmental protection groups have criticized the EPA for this small generator exemption, the EPA believes it is in the best interests of this program to apply the limited resources to the control of the large producers, who create 99 percent of the hazardous waste problem. This approach allows the Federal government to concentrate its control efforts where they will be most effective.

Under the RCRA regulations, all applicable generators, transporters, or receivers of hazardous waste must notify EPA before August 19, 1980, that they are engaged in such activities. After receiving notification, EPA assigns an identification number to the notifier; and after November 19, 1980, only those parties with an EPA identification number can legally continue hazardous waste operations.

Let us suppose that a college or university decides that it does generate hazardous waste. When a properly authorized generator of hazardous waste ships that waste off the college property to a disposal facility, the generator incurs further responsibility. The generator must first designate an approved facility to which the waste will go; must contract with an authorized transporter to take it there; and perhaps most important, must initiate a manifest tracking system that will keep recorded tabs on every stage of the waste's journey to its destination. The transporter and the receiving treatment or disposal facility are then required to sign the manifest and return the signed copy to the generator.

At a minimum, the manifest must contain the following information: name and address of the generator; names of all transporters to be used in shipment of the hazardous waste; name and address of the permitted facility designated to receive the waste; EPA identification numbers assigned to all who handle the waste; U.S. Department of Transportation description of the waste; quantity of the waste shipped and number of containers; and the generator's signature certifying that the waste has been properly labeled, marked, and packaged in accordance with applicable regulations.

Under this system, generators now assume major new responsibilities pertaining to the whereabouts of wastes leaving their facilities. If the generator does not receive a signed manifest from the waste receiver within a specified period, the generator must then inform EPA. Similarly, the generator must notify EPA when the manifest system detects waste missing from any shipment. All of the transporters of hazardous waste have been supplied with emergency-response center phone numbers, which they must call in case of an accidental discharge of a hazardous waste during shipment. Under the regulations, the transporters are responsible for cleaning up any spill or leakage of wastes occurring during shipment.

The manifest tracking and response regulations should give EPA a broad idea of where hazardous wastes are being disposed of. For the first time, we will know how much waste

there is, where it is going, what is being done with it, and what portions are missing or spilled.

The last phase of the regulatory system sets standards for facilities permitted to treat, store, or dispose of hazardous wastes. These facilities, whether they are located on the generator's site or not, are required to comply with operating standards covering proper safety measures, to develop emergency procedures, to monitor and train employees, to assume long-term financial responsibility, and to participate in the manifest system. These facilities will also be required to obtain permits based on the latest technological advances in waste treatment management. Facilities that fail to meet these requirements will either be closed down or not be permitted to open. At the beginning of the new regulatory program, existing treatment, storage, and disposal facilities may receive interim permission to continue operations pending review of their permit applications. These facilities will be obliged to comply with certain operating standards during their continuation in the interim status. Because of the number of sites involved, the process of issuing permits will take time; priority is to be given to review of the applications of new hazardous waste facilities.

We all recognize the unprecedentedly high standard of living of our present society, which is based considerably upon chemical technology. The EPA is not calling for the dismantling of industries or the stoppage of research involving hazardous materials; however, we are beginning to recognize the various difficulties involved in proper disposal of the by-products of modern technology. Thus, we have been forced by tragic events such as that at Love Canal to look seriously at our handling of hazardous wastes. The outlook is good for effective management of these wastes, given the support of state and local governments, industry, environmental groups, and the general public. These regulations should be regarded as the first step of a framework for a sound national program for the control of hazardous wastes.

SESSION 2

CHEMICAL WASTE MANAGEMENT

INTRODUCTION TO SESSION ON CHEMICAL WASTE MANAGEMENT

John F. Meister

In yesterday's sessions we learned about the Resource Conservation and Recovery Act (RCRA) and various other regulations and how they pertain to solid waste disposal and in particular about how they affect colleges and universities. We also learned about some of the innovative methods that universities are using to recycle materials and recover energy from their solid waste. These methods can generate income, reduce operating costs, and generally benefit the university in the long run.

Now we want to shift our emphasis within the field of university waste management to the topic of "hazardous" waste disposal. Hazardous wastes are those wastes generated from a variety of academic and operational areas within the university that require special attention. They are not glamorous, nor are they generally considered capable of being recycled, generating an income, or providing energy. They are wastes that all of us wish would just go away, but don't. They are wastes that no one wants--the university (generator), the community, or our society. We have no choice, however, but to deal with them because they are real and very present. What are they? They are the chemical, radioactive, medical, and research wastes generated in the everyday activities of a university.

Specifically, we want to look at the topic of chemical wastes. First, we should define chemical wastes and place them in their position within the overall galaxy of solid wastes. As the name implies, chemical wastes differ from conventional solid wastes (e.g., paper, garbage, and packing materials). Chemical wastes are primarily generated in academic laboratories and classrooms, but are also produced in other areas such as the Physical Plant. They include small bottles of old laboratory chemicals, containers of waste paint shop and solvents, and drums of water-conditioning chemicals used for corrosion control in the steam plant. In another perspective, they are the wastes that Subsection C (the hazardous waste regulations) was promulgated to control.

Why should we be concerned with the proper management with these wastes? The disposal of chemical wastes or rather their improper disposal has added a new lexicon of terms to our national vocabulary--polychlorinated biphenyl (PCB), Love Canal, dioxin, kepone. Worse still, the improper disposal of chemical wastes has added a new perspective to the concept of national disaster. On August 7,

Mr. Meister is Director of Pollution Control with Southern Illinois University at Carbondale.

1978, President Carter declared a "national disaster" at Love Canal, New York, in response to the consequences of the chemical wastes buried there many years ago. Since then, we have learned almost monthly of other abandoned dump sites leaking or threatening to leak hazardous materials into the environment. Names such as Love Canal, Valley of the Drums, West Memphis, and Wilsonville have been etched into our consciousness. Other incidents such as the contamination of cattle feed in Michigan with polybrominated biphenyl (PBB), PCB contamination of food products in the Rocky Mountain States last summer, and improper motor oil disposal that killed racehorses in Missouri remind us that chemical wastes can have a great and long-lasting impact on our environment. Many of these incidents involved chemicals improperly disposed of many years ago, but only now are the consequences being manifested.

Estimates indicate that roughly 90 percent of all hazardous-toxic wastes produced in this country are improperly disposed of. Very few of the many thousands of public waste dumps have been inventoried as to their present threat. No one knows how many other dumps exist on private property.

We have been told that life would be impossible without chemicals. Although the lifestyle that we have developed in the past 30 years depends on products of the petrochemical and chemical industries, it bears testimony not that life would be impossible without chemicals, but that we enjoy life much more because of them. Yet these same chemicals, when indiscriminately disposed of, cause many of our environmental problems.

Why did the hazardous waste problem develop only recently? One reason was that the chemicals were new to mankind. The chemical industry was not aware of potential health effects associated with their use and disposal, nor were there regulations requiring health tests to be made on the effects of long-term exposure to such chemicals before their manufacture or use. Many adverse health effects were not evident for years because of the long latency period of some chemicals. Other chemicals showed harmful effects only after many years of exposure.

Another reason was that only until recently, nobody was aware that these chemicals had become so pervasive in the environment, and were contaminating soil and drinking water supplies. Industry had no precedent for dealing with such chemicals, and the state-of-the-art method of disposal was placing waste in lagoons and open dumps, because land was plentiful and cheap. At the very best, putting chemical wastes and byproducts in 55-gallon metal drums before placing them into the ground was considered adequate protection. In addition, because disposal of wastes was a cost burden, unscrupulous individuals took advantage of the situation and offered to dispose of the wastes at a very low cost. These "midnight dumpers" disposed of wastes in any way possible, such as dumping them into rivers and sewers and pouring them on farmers' fields.

Contamination was not evident for a long time. The wastes remained only briefly where they initially were dumped because, as geology has shown, the land is often not as solid or stable as it appears. Also, when water passed over or mixed with wastes, leachates containing the chemicals were created. These

leachates eventually reached streams, lakes, and underground drinking water supplies, and all life forms that used the water were exposed to the chemicals. Only in the past decade has the scientific community had the analytical tools (e.g., atomic adsorption and gas-liquid chromatography) to detect the presence of these chemical wastes. Many studies have now shown their presence and effects throughout the ecosystem. Mercury has been detected in fish and birds from lakes with no industries located nearby, and other ecosystems have died because of exposure to toxic chemicals. Many humans have become seriously ill or died from using well water contaminated with toxic elements such as arsenic and cadmium leached from abandoned dump sites miles away.

Awareness of the presence of these wastes and their associated health effects was an ecological bombshell from whose effects we are still reeling. At first, this awareness was limited to the scientific community; however, the discovery of numerous abandoned dump sites throughout the country has shown that improper waste disposal was not an isolated incident, but the general rule.

We do not want to condemn the chemical industry and imply that all environmental and health concerns were ignored to minimize costs. Many generators of chemical wastes were truly unaware of the potential harm. Very few people 20 to 30 years ago could foresee the consequences of waste disposal practices then considered adequate. As already stated, no previous examples of chemical waste disposal were available; nor were there analytical instruments to detect environmental contamination. Further, many generators used methods such as incineration and recycling to dispose of their wastes. Again it must be emphasized that land disposal in unconfined dumps was the state-of-the-art method of that era.

The public, however, now demands cleanup of past dumps and control over the future disposal of these types of wastes. Congress has responded with passage of the Resource Conservation and Recovery Act of 1976, which directs the U.S. Environmental Protection Agency (EPA) to develop regulations to control and regulate hazardous waste disposal. The present administration has also responded by proposing special legislation to establish a "superfund," which would be used to clean up abandoned chemical dump sites.

How does all this relate to university waste disposal? And why should we as universities be concerned with waste disposal practices? We are all aware of the many chemicals and chemical products that are used by universities. Many chemicals in their pure form are used in laboratories and classrooms. Other chemical products such as paints, sealers, transformer fluids, water treatment chemicals, and pesticides are used throughout the institution. Many of these are the same chemicals that have caused environmental mishaps.

What happens to these chemicals and chemical products? In years past, only two disposal options were available to individual generators. They could put wastes either down the sink or in the garbage can. True, some chemicals received special attention because the generator was aware of potential hazardous effects of improper disposal, but this was the exception. Even if an individual was concerned, generally no alternatives were available unless he himself

disposed of the waste. Most researchers and academicians considered their jobs to be teaching and research and were not concerned with the operational aspects of cleanup and disposal of generated wastes. On the other hand, the operational staff charged with such duties generally looked for the cheapest disposal alternatives because they did not understand what they were disposing of. Lack of communication between the generator or user of laboratory chemicals, who generally should have been aware of their hazardous properties, and the disposal staff resulted in the same situation as in the industrial sector; the cheapest, easiest method of disposal was used with little regard for environmental effects. This is intended not as a condemnation of academic and operational units, but as a description of the situation that generally prevailed at many universities.

Many examples of the results of improper chemical waste disposal by universities have been documented. Specifically, I will refer to incidents at SIU-C, which probably resemble incidents elsewhere. Several times after pickups of containers full of bottles of old chemicals, fires broke out in the garbage disposal truck, probably as a result of the bottles breaking and chemicals interacting. Similarly, many fires and small explosions would occur at the landfill where chemical wastes were indiscriminately dumped. When the landfill equipment would smash and break the containers, chemicals would be allowed to mix and run over and through the soil. Many chemicals from containers with no labels were arbitrarily poured together to save space, and noxious fumes would result. Periodically, the local sewage treatment plant experienced an "upset" or reduced efficiency with the activated sludge treatment process. Although these upsets were never directly traced to the university, they generally occurred at a time when different academic departments were cleaning out old unneeded chemicals. Many other examples could be cited, and each university could undoubtedly add its own version. It is believed that the case for proper university disposal of chemical wastes is self-evident from the preceding.

Congress has mandated that control should be established over the disposal of <u>all</u> hazardous wastes in the United States. The EPA has responded to this mandate by establishing hazardous waste disposal regulations. The obligations of the university are not clear in these regulations. The EPA admits that the regulations were designed to apply to large industrial generators and that universities were not intended as primary targets; however, the intent and goal are clear. Universities that generate hazardous waste will have to abide by the regulations.

Universities use chemicals and dispose of wastes just as industries do, but in smaller quantities. The types of chemical wastes produced by a university, however, are limitless, because each laboratory or department uses different chemicals. Although many chemicals are completely harmless, some are extremely toxic. Many wastes are unknown products, as they are products of chemical reactions in classrooms or represent the contents of old bottles no longer labeled. Are universities generators and subject to the new regulations? Is it legal for universities to try to treat some of their own wastes; or must they secure a treatment site permit? By listing each waste separately could universities avoid being

listed as generators through the exemption clause? It is hoped that this workshop will answer these questions.

Because of the persistence and foresight of certain individuals and groups, many universities recognized some time ago the need to establish disposal programs. To learn from their experiences, frustrations, and successes is the purpose of these papers. They have already gone through many of the situations that all of us will face sooner or later, and together we can discuss the operational aspects of a hazardous waste program.

How do you establish a waste disposal operation? How do you identify the wastes that need special attention? What are the realistic disposal options? How do you sell the need for this type of program, knowing its successful administration will undoubtedly cost more than the present disposal program? How do you get the academic staff to participate in such a program? These are the issues that this session's papers have been designed to address. The first paper is a case study of the operation of a hazardous waste program, the second paper concerns the identification and sources of wastes, and the third paper deals with the subject of disposal options. It is hoped that all of us will learn something that we can use in the establishment of a working program at our respective institutions.

Despite many specific questions dealing with the regulations and their applicability, one fact is clear: chemical waste disposal will be forever changed. The debate is finished regarding whether or not improper chemical waste disposal has harmed us environmentally and whether disposal should be controlled. The resounding conclusions are "Yes!" and "It will be controlled!" Consequently, it is believed that universities and similar institutions will have to view chemical waste disposal in a new perspective. No longer will they be able to linger behind the "ivy-covered walls" and in the "ivory towers." They will have to recognize that their wastes, although minimal, are also part of the problem. University administrators, academic and research personnel, and operational staff must all work together to prevent indiscriminate waste disposal in the future. Education is needed to apprise those who generate chemical wastes of the dangers of improper disposal and to encourage the collection and separation of such wastes from regular solid waste. Administrators need to be informed of the legal requirements facing their institutions and the costs of noncompliance. Operational staffs need to learn how to implement a workable effective waste disposal program. It is hoped that these papers will be a first step in this process.

INITIATION AND DEVELOPMENT OF THE SIU-C HAZARDOUS WASTE PROGRAM

John F. Meister

PROGRAM CONCEPTION

Background and Justification

Southern Illinois University at Carbondale (SIU-C) is a major university of 22,000 students. It is located in Carbondale, Illinois, approximately 90 miles southeast of St. Louis, Missouri. The university currently offers approximately 100 undergraduate and 60 graduate degrees.

In 1970 the university realized that there was a need for a operational department responsible for coordinating university compliance with the rapidly expanding environmental regulations. Thus the university established a Pollution Control (PC) Department, which is involved in university compliance in all environmental fields. Table 1 lists the objectives and full responsibilities of the department, and Figure 1 shows a breakdown of its various activities.

One of PC's specific responsibilities is to review proposed and promulgated environmental regulations. With the passage of the Resource Conservation and Recovery Act (RCRA) in 1976, PC became aware of the need to evaluate current university chemical waste disposal practices against the proposed standards. A quick investigation showed that no centralized program existed and that the common method of disposal was dumping wastes down the drain or placing them in the garbage can. Overall awareness of the potential dangers of haphazard disposal appeared to be lacking, and no alternatives were available to those few individuals who were concerned about the dangers of chemical disposal. Many examples of indiscriminate disposal and their environmental consequences were documented; e.g., fires and explosions in the garbage truck and/or the landfill, upsets at the local sewage treatment plant, explosions in sinks and storerooms, and the generation of noxious fumes.

Policy

Following this investigation, PC prepared a report, in the form of a policy paper, for the SIU-C administration. They briefed the administration on the RCRA Regulation and on PC's findings regarding current disposal practices. They also pointed out the implications of the current practices in that the University was in fact a generator of the types of wastes the regulation was designed to control. It was argued

Mr. Meister is Director of Pollution Control with Southern Illinois University at Carbondale.

TABLE 1. OBJECTIVES AND RESPONSIBILITIES OF THE POLLUTION CONTROL DEPARTMENT AT SOUTHERN ILLINOIS UNIVERSITY-CARBONDALE

1. To inform and advise the University Administration of all current and/or potential environmental/pollution matters affecting the continued operation of SIU-C. To advise and help the Administration determine and implement policy to insure that SIU-C does not violate existing or proposed environmental standards and to establish SIU-C as a model of environmental compliance and protection in the areas of air, water, and land pollution.

2. To coordinate and prepare SIU-C responses to non-SIU-C regulatory bodies regarding environmental matters and to serve as liaison to such regulatory bodies.

3. To coordinate and direct research into the sources and solutions of environmental pollution at SIU-C and Southern Illinois. To supervise ongoing laboratory monitoring of all discharges originating on campus to determine if environmental standards are being violated.

4. To assist other operational and academic units of SIU-C regarding environmental and pollution problems.

5. To train SIU-C students to serve as environmental scientists and engineers by providing both advice and practical working experience with real-life situations.

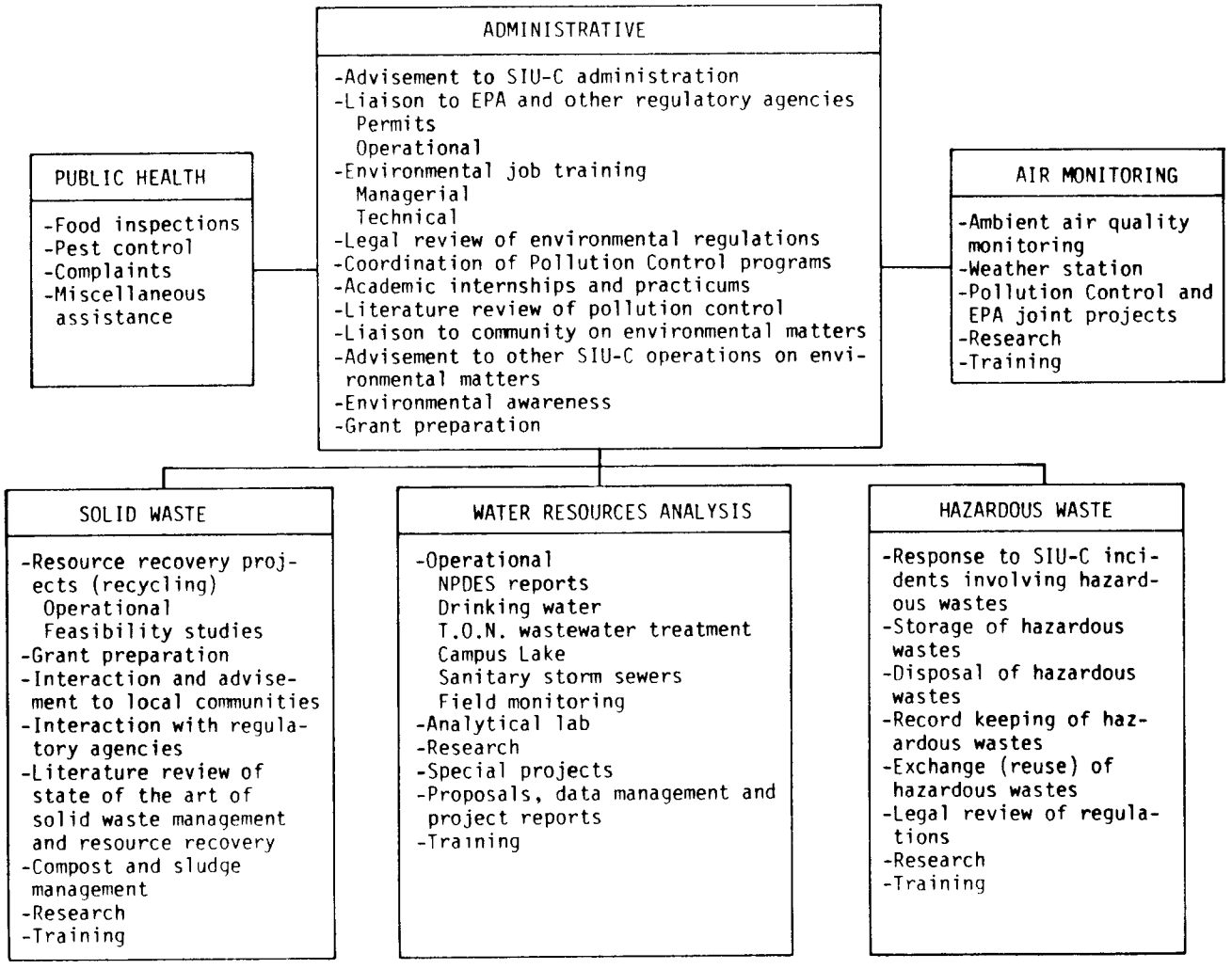

Figure 1. Pollution Control Department at SIU-C.

that the University, as a tax-supported institution and supposedly on the forefront of technology, should set an example for others to emulate. In summary, PC recommended that a centralized chemical waste disposal program be established. Such a program would have several objectives. The first would be to control disposal practices of hazardous wastes to eliminate environmental contamination and/or human health threats. Since the RCRA regulations were not designed around University operations, the second would be to develop an established working program that could serve as a role model to provide guidance to the EPA and others on how to apply the regulations to a university situation. Finally, such a program could provide "hands-on" experience to students interested in hazardous waste management.

The administration took the recommendation under consideration and, after a brief review, decided that PC should be allowed to proceed in the development of such a program. Because at that time there was no legal mandate requiring such a program at the university, however, the administration felt that no additional or new funds could be allocated to such a program. In essence, PC was given approval but no support.

University Reaction

After reviewing its internal objectives and goals, PC decided to proceed with the development of a hazardous waste program. The potential threat of harm from chemical waste disposal was such that a reallocation of funds from other PC programs was justified. Also, PC believed that sooner or later the university would be forced into such a program and efforts prior to that date would be beneficial in showing "good faith" to regulatory agencies as well as developing a workable program.

Selling the concept of a centralized disposal program to administrators and departments generating the wastes was much more difficult than originally thought.

In making their decision not to provide any fiscal support to the program, the administration also felt that any program developed should be primarily advisory in nature. Therefore, they would neither make it mandatory nor encourage participation. Consequently, the initial response of various university constituencies to the program was varied but basically negative. The administrative academic personnel believed that disposal methodologies were the prerogative of the individual academic researchers and that PC, an operational department, had no jurisdiction within academic affairs unless requested. Even then, any activities or recommendations should be approved at the academic vice-presidential level. Several factors no doubt contributed to this attitude: this was a new program, it was not required (at that time) by external regulations on the university as a whole, and there was a general misunderstanding regarding the seriousness of the entire issue of waste disposal.

The response and attitudes expressed by operational units were also enlightening and interesting. As documented elsewhere, operational units (physical plant, janitorial, etc.) are also major generators of hazardous wastes on university campuses. Not only do they generate wastes themselves, but they also may be responsible for the disposal of the wastes generated by the other areas of the university. They were favorable to the establishment of a

central program, but with many reservations. General responses were along the following lines: "Why change; we've always done it this way!" "We know the best way to do it already." "It's going to cost too much."

These official attitudes were almost in total opposition to the attitude expressed by many individual waste generators. The majority of researchers, instructors, storeroom supply officers, etc., who were contacted as to the possibility of developing this program were very enthusiastic and supportive. As the individuals actually dealing with the chemicals and producing the wastes, they were aware of the properties of the wastes and consequently had a far better perspective of the dangers posed by indiscriminate disposal. Therefore, they saw the need for such a program and expressed considerable willingness to work with PC in establishing such a program.

Aware of both the positive and negative attitudes toward the program, PC decided to proceed with its development. The fact that the generators, both academic and operational, who used the chemicals were willing to participate was justification enough to proceed.

PROGRAM DEVELOPMENT

Identification

Next, PC turned its attention to operational aspects of developing the program. The problems that seemed largest, those of determining which wastes to control and how to enlist the generator's participation, were tackled simultaneously, in that the solution to one complemented the other. Because no legal definition of hazardous waste existed when the program was initiated, the program's function was to be primarily advisory. Because of these constraints, PC decided that a hazardous waste should be defined as any waste that the generator believed to be of such nature that it should receive special handling. The generator's knowledge of waste was the deciding factor in determining hazardousness. Thus, if requested, PC could then take over the responsibility for the disposal of the waste. Initially, PC's primary input would be an educational one of informing the generators of the dangers of past and present indiscriminate disposal, explaining the need for a university control program, and defining what wastes should be controlled and what actions PC would undertake to prevent environmental contamination.

In correspondence with the various university departments, PC described the program as voluntary and indicated that the wastes were to be those chosen by the generator. Nevertheless, examples of specific wastes that should initially be controlled were listed--wastes that were universally accepted by scientists as harmful to the environment, such as poisons, cyanides, acids, and arsenic. Most, if not all, generators that PC contacted agreed that those wastes definitely should be controlled. They were to add their own lists of chemicals or chemical byproducts that they believed should be controlled, but control over any of these wastes was to be purely voluntary.

With the passage of time, the Environmental Protection Agency began listing specific compounds that were illegal to release into the environment; e.g., 65 priority pollutants under the Clean Water Act, PCB's under the Toxic Substances Control Act. In the opinion of PC, these

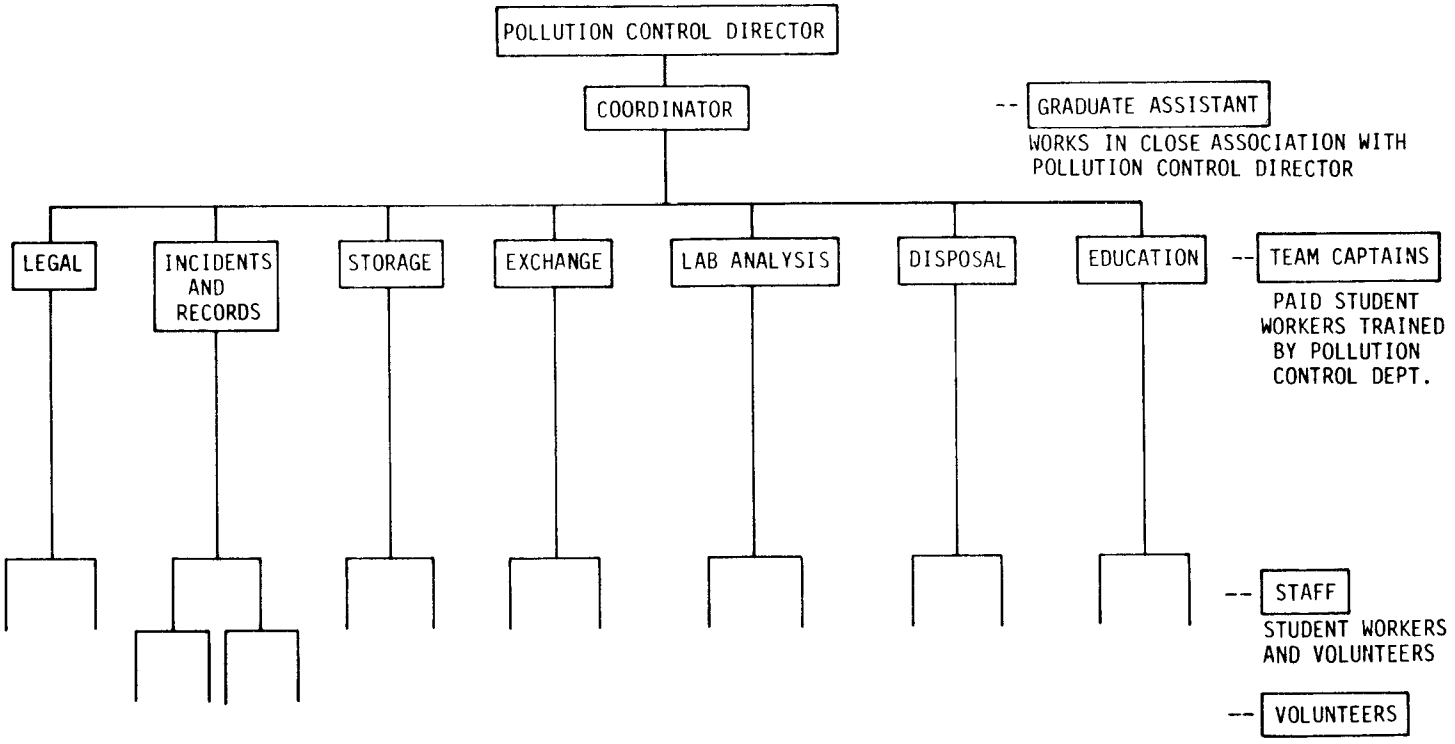

Figure 2. Personnel breakdown.

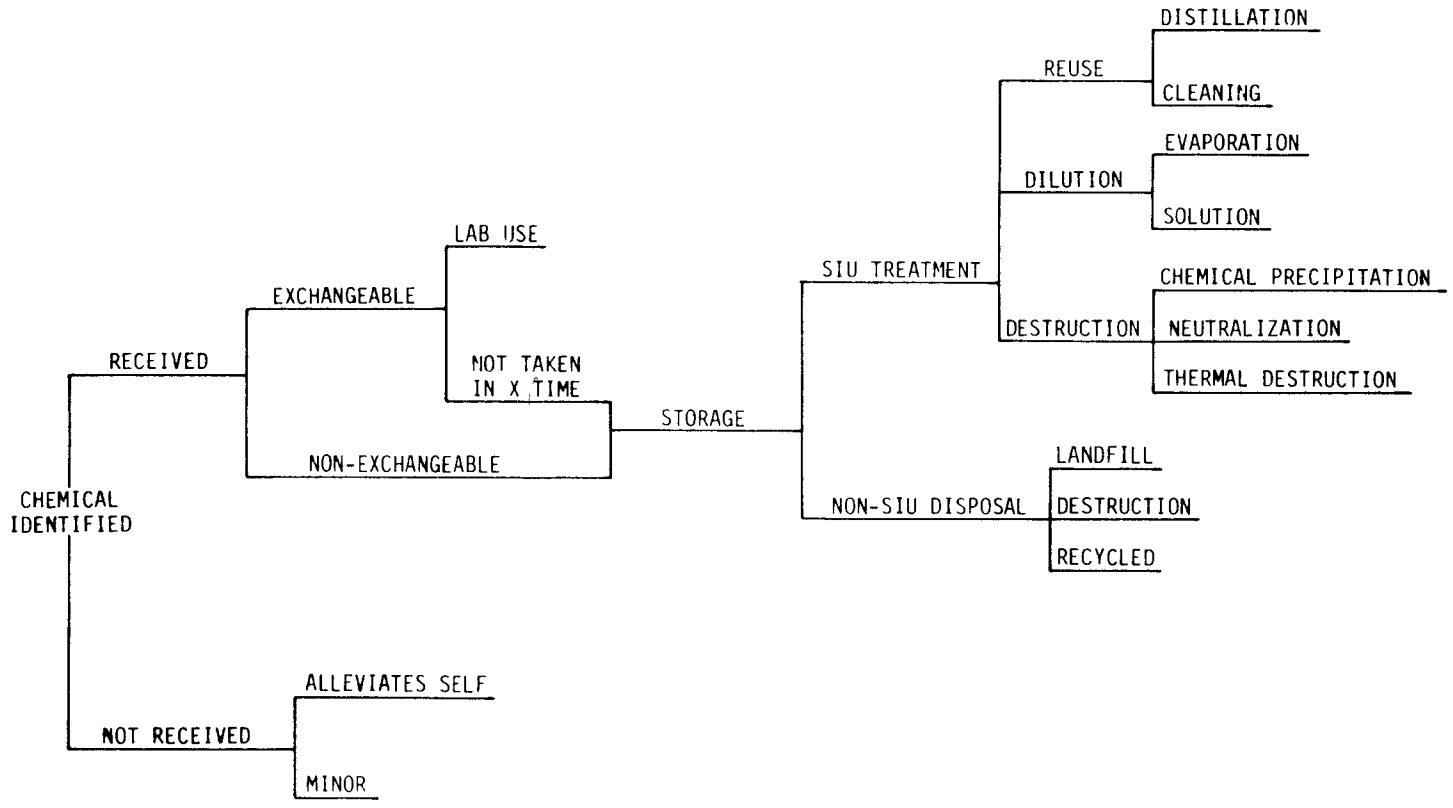

Figure 3. Hazardous waste chemical pathway.

specific lists gave them the authority to place these chemical compounds on a master list of compounds that had to be turned over to PC for disposal. After review, the administration concurred and the Hazardous Waste Program (HWP) was off on a legal footing as a mandatory program.

To encourage generators' participation for wastes not listed by a regulatory agency, PC sent numerous memos to each departmental chairman explaining the needs and objectives of the program. They also arranged for slide presentations to departmental staffs showing examples of past environmental damage, as well as examples of wastes that should be controlled. Insofar as possible, the HWP was presented as a potential and valuable service to the department, in that PC personnel would assist departmental stockroom personnel and purchasing agents in reviewing the chemicals they had, deciding which ones were usable and which ones needed to be discarded, and notifying each department of the presence of needed chemicals that another department might have but no longer needed. Most departments soon realized the value of such assistance as well as the need for proper disposal of chemical wastes.

Within the department, the PC staff concentrated its attention on the "stockroom manager." In most of the departments that use chemicals, one individual is usually in charge of ordering, disbursing, etc. the supplies. Because this individual is generally aware of most all the activities carried on within the department, PC believed that if this individual could be convinced of the need for proper disposal, he or she could serve as the focal point for the entire department. When issuing chemicals, the stockroom manager could instruct the various staff members on the need for proper disposal, and he or she could serve as the department's centralized collecting point from which PC could pick up the assembled waste. Because these individuals are in the respective departments and working with the researchers, they would have some knowledge of the specific chemicals used, the properties of these chemicals, and possibly how to dispose of them. As a result of selling the program as a beneficial service to the departments and the close interaction with stockroom managers and departmental safety officers, PC was soon overwhelmed with the number of participating departments and, specifically, the number of wastes being turned over for disposal.

The promulgation of the hazardous waste regulation on May 19, 1980, closed the loop for any wastes not previously controlled. The regulations not only specifically listed many additional chemicals, but also characteristics (e.g., toxicity, reactivity, corrosivity, ignitability) that would qualify all others. This listing gave PC the final tool for making the SIU-C HWP mandatory for all generators; however, PC's educational input and willingness to work with the generators had already produced a high rate of voluntary participation, which was believed to be preferable inasmuch as the generators were participating because they were aware of the dangers of indiscriminate disposal.

Partially as a result of this early participation, the program retained the same definition of a hazardous waste, i.e., generator decision, even after the May 19, 1980, promulgation. Because university academic personnel tend to resent a mandatory program, greater participation is achieved

with a voluntary type of relationship. In addition, new and different chemicals and chemical compounds are continually being developed and/or used in new combinations within a university, and a detailed listing of mandatory wastes would soon be out of date. The volunteer type of program encourages PC to maintain close contact with the generators and helps to establish close ties that are mutually beneficial. Generators are not reluctant to turn over their wastes because they understand the need and objectives of the program, and by turning all wastes over to PC, they free themselves of the responsibility for proper disposal and/or the consequences. By accepting all wastes, PC can be certain that the truly hazardous wastes have been properly disposed of.

Staff

Another major problem in the establishment of the HWP was the development of a trained staff. With no additional funds to hire additional staff, PC was forced to recruit from within its current staff. As a result, PC is staffed entirely by undergraduate and graduate students interested in obtaining "hands on" training in preparation for a career in the environmental control field. When the need of the program was explained, numerous students already employed in the solid waste management and recycling programs volunteered to work additional hours to help establish the hazardous waste program. Although they demonstrated outstanding dedication and eagerness, their knowledge of chemistry and chemical procedures required to identify chemical compounds was restricted. A special attempt to recruit chemistry majors was only partially successful, as few were interested in obtaining this type of applied training. Consequently, PC developed its own chemistry training program, which was conducted by upperclassmen who had already had several years of experience in handling chemicals and wastes. Outside experts, such as EPA chemists and administrators, were also used. In addition to chemistry and safety training, the program also covered basic environmentalism. The who, what, and why of the program's objectives were explained in detail, as were the regulations. As a result of this special training, the PC hazardous waste staff is believed to be thoroughly competent in all aspects of chemical waste disposal.

Because the entire staff is comprised of students, the turnover rate is 100 percent every few years. This makes training a very important aspect of the program. Students in their freshman and sophomore years are actively recruited. To be accepted in the program, students must be enrolled in the "hard" sciences or engineering, already have taken or soon be taking core chemistry courses, be interested in a career in the environmental field, and have worked as a volunteer in the program for at least one semester to see if they are really interested. Students with nonscience majors can assist in the program by doing such things as recordkeeping and memo writing, but actual handling of wastes or treatment can only be done by those who have had extensive training and a solid background in chemistry and safety. Because of the high turnover, records are kept of all activities, procedures, methods, etc., and this has helped to establish procedure manuals that can be easily followed.

Although all members of the PC hazardous waste staff are trained in all

aspects of the program, specific work assignments are made to facilitate a smooth operational program. Assignments are based primarily on the individual's interest; e.g., those interested in chemical identification are assigned to the Lab Analysis section. Students from nonscience backgrounds work in the Legal Review, Education, and Records sections. Figure 2 shows a personnel and work assignment breakdown. Approximately 25 to 30 students work fulltime in the program with another 10 to 12 volunteers. Day-to-day decisions are made by a graduate assistant who has come up through the ranks of the program.

A large percentage of the PC hazardous waste staff have gone on to fulltime employment in the waste disposal field. Both the specialized PC training in the concepts of environmental control (i.e., knowledge of the regulations and their backgrounds) and the actual "hands on" experience make them very hirable.

Storage-Treatment

Initially, not much thought was given to the program's storage and treatment of wastes. The volume of wastes was expected to be fairly low, and something would be worked out on an as-needed basis. In the meantime, a corner of the PC lab could be used to store the wastes. As mentioned earlier, however, the actual generators within the university were immediately receptive to the program, and the volume of wastes soon surpassed PC's ability to store them. The overflow was placed in hallways, basements, and any place available. This handling created safety violations in itself, and many times defeated the purpose of the program in that incompatible wastes were being stored together, often haphazardly.

The administration responded to this need by allowing PC to utilize an old, no-longer-needed, mobile home shell, which could accommodate a great volume of the wastes while the decision was being made as to what to do with them. Because the trailer was only a shell (with no shelves, tables, or electricity) and all the windows had been boarded up, the doors afforded the only light and ventilation. In the summer the high temperature caused many wastes to volatilize, and in the winter the low temperatures caused liquids to freeze and contents to spill out and mix. The real danger stemmed from the trailer's being located adjacent to a 17-floor resident dormitory.

It was apparent that this facility did not really meet storage needs. In the fall of 1978, another mobile home shell was obtained; however, this one was located away from the central campus, in the Physical Plant storage yard among the farms. The yard is kept under lock and key. The PC Department equipped the trailer with safety equipment, work tables, and storage shelves, much of which was recycled from other University facilities. We learned that metal shelves and the like were unsuitable because they soon corroded. The trailer is provided with heat in the winter and ventilation in the summer. This storage facility has worked well.

The shortage of funds made it necessary to seek inexpensive treatment techniques. One approach was to try to maximize the amount of waste treated by PC and thereby keep the costs for off-campus disposal to a minimum. Another approach was to seek methods wherein one waste could be used to treat others. Initially, low-cost methodologies, i.e., dilution (sewer dumping) and evaporation,

were used for primary treatment. These methods worked satisfactorily and helped to hold down costs. Eventually, after experience had been gained, new and more sophisticated disposal techniques were developed, such as chemical precipitation and thermal destruction in the campus boilers. We also found that many wastes could be distilled, cleaned up, and reused, which further reduced the number requiring disposal. New techniques were developed whenever a sufficient amount of waste with similar characteristics accumulated. All techniques were checked out with references such as Sax "Dangerous Properties of Industrial Materials" before they were attempted, and the resultant byproducts (e.g., supernatants, sludges) were checked for hazardous properties prior to further handling. Some treatment techniques were abandoned after experimentation either because the procedure was too hazardous for the staff or because it was too costly.

One of the most successful programs developed was a chemical exchange program, in which reusable chemicals are segregated and delivered to other users on campus according to need. Thousands of wastes are recycled as a result of this program.

After several years of experience, we worked out a procedural flow chart describing the fate of a collected hazardous waste. Upon notification of the presence of a waste, the PC staff investigates the situation and decides how it should be handled, based on volume, chemical properties, etc. Figure 3 is a flowchart showing the fate of a waste collected by PC.

Summary

After a period of development, the SIU-C hazardous waste disposal program is fully operational and has the full backing of the administration and the enthusiastic support of the actual generators. As a result of this program, the University's chemical wastes are collected, identified, stored, and ultimately disposed of in an environmentally approved manner.

OPERATION OF THE SIU-C HAZARDOUS WASTE PROGRAM

John F. Meister

Pollution Control, an operational division within Southern Illinois University at Carbondale charged with the environmental compliance of the university, has developed a hazardous waste management program for university-generated wastes that can pose a threat to human health and the environment. The purpose of this program is to prevent haphazard or indiscriminate disposal of these wastes. Major functions include collection and storage, identification, treatment, and environmentally safe disposal of the waste. Treatment options depend on the chemicals involved and include evaporation, precipitation, neutralization, and distillation. Many wastes are recycled into academic laboratories through an in-house chemical exchange program. Wastes that cannot be treated and reused are disposed of either on or off campus.

The SIU-C hazardous waste control program currently has four basic components: identification, storage, treatment, and disposal of collected wastes. In addition to these functions, the PC hazardous waste (HW) staff spends considerable time and effort in several support functions, including the provision of scientific and operational assistance to various departments on special waste problems. A review of pertinent rules, regulations, newsletters, and journals keeps the staff abreast of the latest techniques and processes. Finally, ongoing educational efforts are made to instruct generators of the need for proper disposal.

WASTE IDENTIFICATION

Inclusion of a particular waste in this program is initiated by the generator, who is defined as any individual or department using a compound, chemical, or other material that requires disposal. Any waste that a generator believes should receive special attention is included in the program.

Most initial contacts are made by a telephone conversation in which the generator notifies Pollution Control of the presence of a waste. Basic information concerning the waste and the generator is taken over the phone and logged on a Hazardous Waste Incident Report. The telephone logs are reviewed by the division coordinator, who schedules pickup of the waste from the generator.

Mr. Meister is Director of Pollution Control with Southern Illinois University at Carbondale.

Pollution Control will, in most cases, actually do the collection and transportation of the waste. Although this procedure is more expensive than having the generator or the generator's students deliver the waste, it provides better protection from the potential dangers of waste. These dangers are especially great if inexperienced students transport the hazardous waste. The PC staff uses a pickup truck equipped with special safety and cleanup equipment in case of a spill or leak.

At the time of the collection, the PC staff meets with the generator and obtains and records such pertinent information as specific chemical composition, generation rate, special notes on toxicity and environmental hazards, and any information regarding proper disposal that the generator might be aware of. If the generator is new to the hazardous waste program, the staff explains how the program operates, what sort of storage containers should be used, and what other wastes should be included. If the waste is definitely nonhazardous, the staff tells the generator how he or she can, in the future, properly dispose of it. The container of wastes is labeled with a special hazardous waste label, if the original label is no longer intact or does not indicate the actual contents.

The waste is then brought back to Pollution Control. A special section of the laboratory, which is equipped with a fume hood, has been set aside for use by the HW staff. The waste is "inventoried" into the hazardous waste record system, and all pertinent information is recorded in a log book and on a 4- by 6-inch index cards. These provide the central record system for keeping track of all wastes handled.

The HW chemists then evaluate how the waste will be handled. Although past experience is important in the evaluation, references such as the "Handbook of Chemistry and Physics" (Weast 1979), "Dangerous Properties of Industrial Materials" (Sax 1977), and "Toxic and Hazardous Industrial Chemicals Safety Manual" (International Technical Information Institute 1979) are the primary sources used to determine toxicity and hazards associated with the waste. Additional information from these references is recorded on the label, in the record book, and on the index card.

Operationally generated wastes such as copier and duplicating fluids and photo-developing chemicals may require more extensive investigation. Because the chemical makeup of these products is often not on the label or container, the HW staff must contact the manufacturer to obtain a list of the chemicals present in the product, information on environmental effects, and recommendations for proper disposal before decisions can be made regarding further handling.

Unknown wastes are labeled as such and set aside until they can be analyzed to determine the presence of any hazardous waste characteristics. Although the generator is requested to try to determine the identity of the waste before pickup, it may still remain unknown. These result from academic staff turnovers etc. Gradually, the backlog of old chemicals has been cleaned out and disposed of, and departments being informed of the importance of proper identification to prevent accidents is resulting in a reduction of the number of unknown wastes.

Identification of the chemical nature of the waste determines the method of

further storage and disposal. If the waste contains no chemical or compound whose release into any phase of the environment is forbidden by the U.S. Environmental Protection Agency (EPA), it is marked nonhazardous and set aside for conventional disposal, either by dilution and dumping into the sewer or by placement into a solid waste stream. All other wastes are determined to be exchangeable or nonexchangeable. Exchangeable wastes are those that can be reused in their present forms somewhere on campus. Nonexchangeable wastes are those that will require further treatment and disposal. Because of the importance of identification, chemistry students comprise the greatest portion of the hazardous waste student work force. Continual special training sessions are held to upgrade their ability to identify toxic and hazardous properties of waste.

WASTE STORAGE

Several storage facilities are used between collection and treatment or disposal. As mentioned, selection of storage facilities depends on the type of waste and method of disposal.

A portion of the PC laboratory that includes a fume hood is used for storage during identification and inventory. All volatile wastes are kept under the fume hood. Wastes that are determined to be nonhazardous are stored in inconventional storage areas until they can be disposed of conventionally. Wastes that can be treated relatively easily are also stored in the PC laboratory because most chemical treatment takes place there. Wastes for which there is an immediate demand by another department (e.g., relatively pure solutions) are also stored temporarily in the PC laboratory.

Storage facilities that the generator might possess are also utilized, especially in cases when the generator produces large amounts of a single type of waste. The PC staff will provide large appropriate containers such as drums and teach the generator safe procedures for collecting and storing the waste. When these containers are full, the PC staff removes the waste. For example, the Physiology Department receives 55-gallon drums to store phenol wastes from cadavers in anatomy work, and the Environmental Engineering Department receives 15-gallon plastic carboys to collect wastes from tests of chemical oxygen demand. These in-house larger storage containers drastically reduce the number of collection trips and short-term storage requirements in the PC facilities.

The primary storage facility used for all remaining wastes after collection and inventory is a converted "mobile home" trailer located in the Physical Plant storage yard. The storage yard is roughly 1½ miles from the center of campus and located among the university farms. The entire storage yard is kept under lock and key at all times, and the trailer is located in a remote corner of the yard behind large concrete storage bunkers. The trailer has been modified internally by the addition of shelves and cabinets in all the rooms and the installation of work tables. Safety equipment has been located at easily accessible points. Several large openings have been made in the walls to provide ventilation in the warmer months.

Different types of wastes that can react with one another are stored in separate rooms. An inventory system is used to number wastes in the trailer for easy location and re-

trieval. Within the room or space allocated to a type of waste (e.g., organic solvents) the wastes are segregated by final destination. For example, those awaiting treatment and reuse are stored separately from those awaiting shipment and off-campus disposal.

WASTE TREATMENT

Available treatment options include evaporation, precipitation, neutralization, distillation, cleaning, and exchange. The goal of the hazardous waste program is to treat the maximum number of wastes and thus reduce the quantity that must be shipped off campus for landfill disposal.

The choice of treatment option is based on the nature and type of chemicals that the waste contains. Generally, the decision is made at the time when the waste is inventoried and reference information is gathered. References such as those mentioned earlier are used to verify the capability of treatment and to determine proper procedures. All treatment is done in safe areas by trained chemists and staff members who are equipped with appropriate safety equipment. Records are kept of all treatment activities.

Evaporation

A large number of wastes are water soluble (e.g., salts and heavy metals). If the water is evaporated, the volume and weight of wastes requiring final disposal are drastically reduced. Further, many dilute organic solvents are received that can be evaporated into the atmosphere at a slow, controlled rate with no harm.

Evaporation is performed at the site of the hazardous waste storage facility. On the west side of the trailer a lean-to type of structure was constructed with lumber and covered with clear heavy-gauge plastic. Several plastic evaporating pans were placed under the lean-to. Each pan is approximately 4 feet in diameter and contains no more than 6 inches of liquid. The purpose of the lean-to is to prevent rain from reaching the evaporating liquids.

The waste liquids are placed in the pans and allowed to evaporate. The sludges and residues that remain after evaporation are removed from the pans and packed for ultimate disposal. The advantages are a drastic reduction of weight and volume and the simplified storage, packing, and shipping requirements of a solid as opposed to the original liquid.

Evaporation generally proceeds rapidly because of the sun's heat under the plastic and usually is carried out between the months of April and October. During this time a very large amount of wastes can be treated. During the colder months some wastes are evaporated under the fume hood within the PC facility. Also, some nontoxic wastes are evaporated in the mechanical rooms of the chemistry building.

Precipitation

Many waste solutions can be chemically treated to precipitate the hazardous element. The precipitate can then be separated and stored, and the supernatent can be disposed of conventionally. Again, the advantages are the reduction in weight and volume and the conversion of the waste into a solid.

Because precipitation is a chemical process, it is carried out in the laboratory in small quantities by trained chemists. The process can be used throughout the year. The precipitates are collected, and those of the same chemical type can be combined to save space.

Precipitation is a process in which one waste product can be used to treat another; thus, two wastes can be eliminated simultaneously. For example, waste chromic acid can be treated with waste sodium hydroxide. Both wastes are eliminated, a precipitate (chromium) is formed, and the remainder of the solution can be disposed of. Chromium is a valuable byproduct that can be stored and sold as a raw product.

The opposite of precipitation-solubilization is carried out on some solid wastes. These are solids that are soluble in solvents, which then can be incinerated or combusted in the campus boilers. Benzyl compounds are examples of wastes that can be treated by this method.

Neutralization

Neutralization, like precipitation, is a chemical process wherein different wastes are mixed together. Their chemical properties are such that they will neutralize the hazardous properties of one another. The classic chemical neutralization, which is extensively used in the HW program, is the mixing of acids and bases. The end product generally can be disposed of down the drain with no harm. All neutralizations are carried out in the laboratory under controlled conditions, and end products are checked before disposal to ensure that no hazardous properties remain.

Distillation

Many departments and researchers on campus use considerable amounts of solvents that become contaminated with other solvents or wastes. Through distillation the solvents can be separated and recovered with a high degree of purity. These solvents can then be recycled to the generator for reuse. Distillation not only eliminates waste disposal but also saves the institution money. Considerable quantities of such solvents as xylene, acetone, alcohol, and benzene have been recycled to various departments on campus.

Cleaning

Many wastes are chemicals that have simply become dirty. Simple cleaning, filtering, washing, or physical separation returns the chemical to usable form for reuse by the generator or another user. Mercury is a commonly received waste that can be reused in manometers, barometers, and other devices after simple cleaning.

Exchange

Many chemicals received by the HW program are still pure enough for direct reuse. These are chemicals that a generator no longer needs and wishes to dispose of to conserve shelf space. They are generally in their original containers and thus easily identifiable.

To reduce the wastes requiring off-campus disposal, save costs, and promote the concept of recycling, the Pollution Control Hazardous Waste division instituted an exchange plan for this type of chemical waste. When wastes are received, their exchange possibilities are evaluated. Homogenous wastes that are still in their original containers and have

been disposed of merely because they are no longer needed are set aside for possible exchange purposes.

Periodically, a list of all accumulated exchangeable wastes is prepared and distributed to interested departments on campus. Pollution Control provides no assurance as to the quality of the chemicals, but does provide them free of charge. Not all chemicals are claimed, but most of them are.

The program offers advantages to all parties. The recycling of the wastes makes treatment and disposal unnecessary and thus reduces the cost of the HW program and, ultimately, of disposal. The receiving department obtains chemicals at no cost, the concept of recycling is promoted, and the participants are reminded of the benefit of the HW program.

The quantity of wastes recycled indicates the success of the program. During 1978, more than 300 gallons of solvents and 3000 different chemicals were returned to academic departments. The replacement cost of these chemicals, if they had to be purchased, was calculated at more than $20,000. Because of the success of past exchanges, many departments now have standing requests for certain chemicals as they are received by the HW division. This helps reduce storage requirements of the program.

WASTE DISPOSAL

The residues that remain after treatment are disposed of both on and off campus. On-campus disposal consists of sewer dumping, thermal destruction in the campus boilers, and special biological treatment. Off-campus disposal consists of shipment to an EPA-approved hazardous waste landfill and is mandatory for all wastes and residues considered extremely toxic or harmful to humans or the environment.

All disposal operations are carried out by trained staff members. Each disposal is recorded in the files, and the 4- by 6-inch index card for the chemical is removed and placed in a box labeled "disposed of chemicals." This completes a "cradle-to-grave" record of the waste within the SIU-C hazardous waste program.

On-Campus Disposal

Dilution--
Many wastes, both nonhazardous and hazardous, can be safely disposed of via sanitary sewer. If the material can be adequately diluted and will not be reconcentrated or biomagnified, then it can be safely disposed of in this manner. Waste that can be biologically stabilized through the wastewater treatment process also can be dumped. Research is done on all such wastes before dumping to ensure that they will not harm the collection system or interfere with the sewage treatment process.

For ensuring immediate and proper dilution, the decision was made to dump wastes directly into a manhole rather than down a laboratory sink. After a thorough search, a manhole was selected. The upstream flow rate at this manhold was determined to be roughly 350 gallons per minute at certain regular times during the day. During disposal, a 4-inch-diameter PVC pipe is inserted vertically in the manhole, and the wastes are dumped into the pipe, which acts as a funnel and conducts the wastes into the sewer channel and prevents them from contacting the sides of the manhole. A full-flowing, ½-inch garden hose is also placed inside the

pipe to ensure that wastes are washed down and to provide additional dilution. The rate of waste dumping is controlled to allow complete mixing and flushing. Sewage samples are taken downstream from the manhole for pH and other tests to determine whether the wastes are creating problems.

Incineration--
Because of their chemical makeup, many other wastes (primarily alcohols and organic solvents) contain certain amounts of heating value. Some of these are used to dissolve certain other waste chemicals, and the remaining liquid solvents are taken to the physical plant steam boilers, where they are sprayed on the coal as it is placed into the firebox. The high temperatures (1200° to 1400°F) are sufficient for thermal destruction of the wastes.

Other--
The PC HW division is continually investigating other forms of disposal. A system of biological land spreading is being examined, and research is continuing on methods of chemical destruction of wastes. Methods of on-campus disposal are being sought because they are much cheaper than methods of off-campus disposal. Additionally, when the HW division is responsible for disposal, the waste is known to be destroyed and thus no longer to threaten the environment or human health.

Off-Campus Disposal

Certain wastes, because of their toxicity and environmental hazard potential, are not treated or disposed of on campus, but are shipped off campus to avoid the risk of exposure during treatment. Wastes sent off campus include those that require special disposal permits, those that are subject to regulations specifying where and how they may be disposed of (e.g., polychlorinated biphenyls), and those for which no on-campus disposal system works.

Phenolic wastes collected on campus are sent to a local industrial wastewater treatment plant for disposal. The local industry employs phenols in its manufacturing process and has an activated sludge treatment process capable of destroying phenolic wastes. The industry has agreed to accept SIU-C waste, which it slowly feeds into its wastewater treatment plant.

Other wastes requiring off-campus disposal are sent to an EPA-approved hazardous waste landfill. A permit is received from the EPA for this disposal. The HW staff packs the wastes into 55-gallon drums in accordance with EPA and Department of Transportation specifications covering the types of wastes that may be packed together, types of packing materials, and types and conditions of drum. Labels on the drums indicate the types of waste, and written records are made. The waste drums are then delivered to the recipient, who is responsible for transportation and disposal.

SUPPORT FUNCTIONS

In addition to the collection, treatment, and disposal of wastes, the PC staff provides several support functions that round out the overall program and contribute to its success. Student members of the staff are used on these projects.

Advice

Periodically, special problems regarding chemicals and waste disposal

arise within the university. Many of these are not associated with collecting and disposing of waste; rather, a department or individuals are seeking advice on how to handle a situation. For example, they may be preparing a grant proposal and need information on handling and storage of chemicals. In other cases, an operational department may be considering a change of chemicals and want advice on whether the new chemicals will be safe.

Emergency Response

If a dangerous leak or spill of chemicals occurs anywhere on campus, the HW staff is utilized to contain and dispose of the spill. When noxious fumes were found to be entering the vivarium via floor drains, the HW staff investigated the situation, found that individuals were pouring chemicals down the drain in upstairs laboratories, and informed them of proper disposal methods.

Review

To keep informed of changing technology and regulations, the HW staff has established a library complete with copies of the latest "operational" journals in the field of solid waste management and chemical literature. Current periodicals such as the Hazardous Waste Newsletter, Chemical Regulation Reporter, and Environmental Reporter are studied, in addition to the Federal Register and other reports on state and Federal regulations. This review of literature enables the staff to respond to new regulations, as well as keep informed of the state of the art of treatment and disposal.

Education

Educational efforts were essential in establishment of the PC program. Although the success of the program is now the best tool for drawing more individuals into it, an educational plan has been devised for new university staff members. The plan consists of explaining why the PC program is necessary, how it works, and how the individual can be involved. Also, slides showing the environmental hazards of improper disposal have been prepared for presentation to departments and other interested groups. When necessary, memos are sent to generators and to all departments to remind them of the program and inform them of changes.

The HW staff, which consists entirely of students, also requires special training and education. The fact that all workers are volunteers interested in a career in waste management and seeking experience gives motivation and simplifies the training. The staff members are taught through individualized instruction, as well as through seminars and workshops. Students with extensive academic chemical background are used to teach others.

Special Projects

The HW staff is also used to conduct special studies on current problems faced by the university. With its modern equipped laboratory and reference library, the staff can perform studies on short notice and at low cost. Many waste streams have been analyzed to determine if hazardous wastes are present, and a study is now being undertaken to determine the presence and level of pesticides in the Campus Lake watershed.

CONCLUSION

The SIU-C hazardous waste program is a successful example of how a univer-

sity can safely dispose of its chemical wastes in an environmentally acceptable manner. The program has been developed over the past several years in recognition of the fact that the university is a generator of hazardous waste. It is operated completely by student staff and has developed a workable system of identifying, collecting, storing, treating, and disposing of chemical wastes generated on campus. Wastes that formerly were placed with the solid waste or dumped down the drain are now isolated and controlled. As a result, toxic, hazardous wastes produced by the university are no longer indiscriminately disposed of. Thus, the threat to the environment and human health from improper chemical waste disposal has been significantly reduced.

SOURCES AND IDENTIFICATION OF UNIVERSITY-GENERATED WASTE

Henry H. Koertge

Since 1973, the University of Illinois at Urbana/Champaign (UIUC) has had an established collection system for campus-wide pickup of waste chemicals. Some of the procedures that evolved under this system are now or soon will be required by environmental regulations. The major portion of this paper involves a discussion of ways and means to identify the persons (or departments) on campus who are generating such waste. This can be accomplished by (1) advertising the chemical waste disposal service, (2) keeping track of chemical storeroom purchases, and (3) monitoring research projects.

The history of the management (or mismanagement) of chemical wastes at universities probably parallels the experience of industries throughout the country. In the past, chemical waste has been volatilized, burned, buried, and dumped in both sanitary and storm sewers. These methods of disposal have been applied either legally or illegally, depending on the local situation. In fact, some of these seemingly inappropriate means of disposal may be the best methods available today, even from an environmental standpoint. The appropriateness of these disposal methods, however, depends on the quantities involved, dilution available, and individual hazardous characteristics. The environmental impact of wastes from a university community depends to a great extent upon the relative size of the university as compared with the local metropolitan area. A small campus could dispose of a fair percentage of its hazardous chemicals if it were discharging to the sanitary sewers of a large metropolitan sanitary district.

Many universities, however, have determined that these long-practiced means of disposal are inadequate, inappropriate, or illegal because the quantities and characteristics of many of the chemicals have an adverse impact on air, land, and water quality. It should be noted that univer-

As Director of the Division of Environmental Health and Safety at the Urbana-Champaign Campus of the University of Illinois, Mr. Koertge is in charge of inspection and consultation services for health and safety. He has extensive experience as a sanitary engineer and has published articles in several health journals. He holds a B.S. and M.S. from the University of Illinois at Urbana.

sity-generated chemical waste is different from industrial chemical waste. This difference may turn out to be a considerable problem for colleges and universities because the rules and regulations that have been or are being established by Federal and State Environmental Protection Agencies are designed to cover industrial hazardous waste materials.

The main difference between university- and industry-generated chemical waste is the quantity and number of materials involved. On the campus of the University of Illinois at Urbana/Champaign (UIUC), the quantities of hazardous chemical wastes packaged for disposal range from 1 gram to 55 gallons, extremely small quantities when compared with industrial wastes. The various types of materials are possibly as numerous as the 16,500 different chemicals listed in the Registry of Toxic Effects of Chemical Substances published by the National Institute for Occupational Safety and Health (NIOSH) in 1975. In addition to these manageable wastes, colleges and universities have to dispose of extremely difficult-to-manage materials. These materials are classified on the UIUC campus as unknowns, pyrophorics, and explosives. It is theorized that eventually each campus will need a specially designed incinerator capable of burning explosives, pyrophorics, and unknowns. Regulatory agencies will be obliged to allow campuses to burn unknowns because generation of unmarked or otherwise unknown chemicals cannot be prevented and if incineration is not permitted, the waste will probably be disposed of illegally.

Another characteristic of university-generated waste is that much of it is not waste per se because it has not been used or mixed in any manner. In fact, it could probably best be described as leftovers.

Since the criteria for defining hazardous wastes include ignitability (flammability), corrosivity, reactivity, and EP (extraction procedure) toxicity, all waste chemicals (leftovers) will probably be identified as hazardous. The regulatory agencies are considering the addition of the following items to the list of criteria just mentioned; organic toxicity, carcinogenicity, mutagenicity, teratogenicity, bioaccumulation potential, phytotoxicity, and infectivity. Currently, a waste is considered hazardous if it has any of the following characteristics:

Ignitability (Flammability). If a liquid, the material has a flashpoint of less than 60°C (140°F); if not a liquid, is capable of causing fire through friction, absorption of moisture, or spontaneous chemical changes; or is an ignitable compressed gas or an oxidizer as defined in the Code of Federal Regulations.

Corrosivity. The material is aqueous and has a pH of less than 2 or greater than 12.5, or it corrodes steel at a rate greater than 6.35 millimeters per year at a test temperature of 55°C.

Reactivity. The material is normally unstable; reacts violently with water; forms potentially explosive mixtures with water; generates toxic gases, vapors, or fumes when mixed with water; or is cyanide- or sulfide-bearing.

EP Toxicity. If an extract of the material contains certain concentrations of various contaminants, such as arsenic, barium, cadmium, chromium, lead, mercury, salinium, or silver.

In addition, some lists define wastes as hazardous primarily because they are toxic. These are listed in the Federal Register (Volume 45, No. 98, Monday, May 19, 1980) along with complete definitions of the four characteristics just listed. An examination of these characteristics indicates that almost all leftover chemicals on a college/university campus will be considered hazardous.

Many different sources of hazardous chemical waste are found on a college/university campus. Among these is the physical plant or operations and maintenance unit with its various crafts and services. Examples of these crafts and services and the wastes they create are shown in Table 1.

Field operations of agricultural colleges are another campus source.

TABLE 1. POSSIBLE WASTES FROM CRAFTS AND SERVICES

Craft/service	Possible wastes
Painters	Paints and solvents
Janitors	Bleaches, wax removers
Groundsmen	All types of pesticides and fertilizers
Water treatment personnel	In the areas of water supply, swimming pools, cooling towers, and boilers/hot water heating systems, many toxic chemicals (e.g., chlorine, anticorrosive chemicals, and biocides) are used
Brickmasons	Muriatic acid
Electricians	PCB's from transformers
Car pool (garage)	Cleaning solvents
Machine shop	Cutting oils

Pesticides and fertilizers, particularly experimental pesticides, may create special problems and require special solutions.

Perhaps the most obvious sources of chemicals are the many laboratories on all campuses. Categorized as chemical and biological, these are found in the following areas: chemical sciences, life sciences, agriculture, veterinary medicine, and college of medicine.

Besides these somewhat obvious sources, other sources of hazardous chemicals exist, but are less suspect. Included in this group are the engineering colleges, especially the chemical/biological laboratories of the Environmental Engineering Department; however, all the other engineering departments use various chemicals (particularly oils and gases). All shops should be checked as sources of chemical wastes, including those in the college of education, because they may use various chemicals such as paints and solvents in their industrial shop courses. Art colleges and departments also use plastic materials and a great variety of paints and solvents.

The proper disposal of all hazardous chemicals in accordance with all applicable rules and regulations requires the establishment and funding of a unit to be in charge of such an endeavor. The campus must staff the unit with technical/professional personnel and equip it for pickup, transportation, and collection of hazardous chemicals. Every campus probably has some semblance of a hazardous chemical waste disposal system. The system may have grown erratically and now be close to evolving into a full-fledged recognizable system, or it may be a long-recognized, acceptable, efficiently managed system. It is doubtful, however, that any college/university is 100 percent efficient in the collection and proper disposal of all hazardous waste chemicals. Some are still being volatilized in chemical fume hoods, flushed to a sanitary sewer, or dumped in garbage cans. Whether a particular campus is beginning a chemical waste disposal program or expanding upon an existing one, several methods are available for developing a list of hazardous chemical users.

First, it may be appropriate to advertise the existence of the collection and disposal service for hazardous waste chemicals. This could be accomplished by placing an article or advertisement in the campus student newspaper or in a faculty/staff publication, or by sending a letter to the heads of all academic and administrative units. The correspondence should include details of the service and a request for information concerning the quantities and types of materials expected to be generated. If this is a new service, a list of waste materials on hand for immediate disposal should be requested.

Another means of determining hazardous chemical users is through the purchasing department or through the chemical store operation. At UIUC, the chemical storeroom has a computerized inventory list, which is flagged so that the Division of Environmental Health and Safety is automatically sent a copy of the chemical purchase order for a limited number of chemicals --those appearing on the original Occupational Safety and Health Administration (OSHA) carcinogen list and a few others. At UIUC, the present system of collection and disposal is near capacity, and there

has been no need to expand the list of users by increasing the numbers of flagged chemicals.

Another method of identifying hazardous chemical users is through the monitoring of new research projects. At UIUC, a one-page form is filled out and sent to the campus research board for each externally funded research proposal. One section of this form asks the user whether or not hazardous materials or procedures are utilized. It also asks if the material can be categorized as a chemical hazard, biohazard, or radiation hazard. A copy of each research proposal transmittal form that indicates the use of hazardous chemicals is sent to the Divison of Environmental Health and Safety. Thus, it is possible to determine potential hazardous chemical users and to be made aware of other potential safety problems.

Another possible means of determining hazardous chemical users is to check with the campus radiation safety officer. The radiation safety officer probably has a list of laboratories using radioisotopes. Experience at the UIUC campus indicates that most, if not all, of these laboratories use chemicals that are deemed hazardous.

As mentioned earlier, any leftover chemical is probably considered hazardous under one or more of the criteria of the Environmental Protection Agency because this type of chemical waste usually consists of "straight" chemicals. If additional information is necessary to determine whether or not a particular chemical exhibits one or more of the criteria, it may be necessary to invest in an automated information retrieval system. Utilization of computer and communication technology through access to bibliographic and knowledge data bases may become a necessity. Since university campuses use vast amounts of chemicals, it would be impossible, or at least impractical, to do all of the necessary research necessary to list the various characteristics of the chemicals--and even more impractical to test the chemicals. Basic background and specific examples of retrieval systems are provided in an article entitled "Automated Information Retrieval Science and Technology," by Doszkocs, Rapp, and Schoolman, in Science, Vol. 208, April 4, 1980, pp. 25-30. At UIUC, the Division of Environmental Health and Safety has purchased a CRT terminal with a modem, a microcomputer, and a printer terminal. This equipment will record, store, select, and recall information on chemical purchases and usage, as well as computerize the radioisotope inventory for the radiation safety program. This can provide the following specific information in regard to chemical safety and disposal:

Inventory--the chemical, amounted used, location of users.

Flagging of highly toxic/carcinogenic chemicals.

Recordkeeping for annual report on chemical disposal.

Access to 90 percent of all chemical purchase data on campus.

Direct access link to national data base for data recall, including physical characteristics, toxicological information, and references.

PACKAGING, TRANSPORTATION, AND DISPOSAL OF WASTES OFF CAMPUS

R. R. (Dick) Orendorff

This paper is presented to assist academic institutions in meeting state and Federal regulations concerning the packaging, transportation, and disposal of wastes. Because the Resource Conservation and Recovery Act (RCRA) was primarily designed to regulate the chemical manufacturing industry, institutions (both hospitals and universities) are forced to comply with regulations that are, in many ways, vague or nonapplicable to their operations.

TYPES OF WASTES

Wastes are divided into three categories. The first is general refuse (i.e., garbage), which is nonhazardous, is not stringently regulated, and poses little or no disposal problem. The second type is radioactive waste, currently regulated by the Nuclear Regulatory Commission and some state agencies. The third waste category is our problem child--hazardous chemical wastes. This material is now regulated by the Department of Transportation (DOT), U.S. Environmental Protection Agency (EPA), and state environmental protection agencies. This paper addresses disposal of hazardous chemical wastes and compliance with applicable DOT, U.S. EPA, and state EPA regulations.

RESPONSIBILITIES OF CHEMICAL WASTE GENERATORS

The generator is legally responsible for proper disposal of hazardous chemical wastes. The generator's responsibilities include the notification by the generator to the U.S. EPA of hazardous waste generation, arrangement with a licensed disposal facility to accept the wastes, correct packaging of the wastes in accordance with DOT regulations, accurate completion of permits and shipping manifests, and proper transportation to the disposal facility.

To clarify the entire procedure, let's review a step-by-step description of chemical waste disposal. First, you must read the U.S. Federal Register of May 19, 1980, particularly Parts I through V. Note carefully which materials are hazardous and which are nonhazardous. If hazardous wastes are being generated, the law requires notification form [EPA

Mr. Orendorff is a Technical Representative of Nuclear Engineering Co., Inc. He has been employed by private industry and government and has more than 18 years of experience, including work in chemical research and engineering. He holds a B.S. from the University of Illinois at Urbana-Champaign.

8700-13-(5/80)] to be filed with the U.S. EPA by August 19, 1980.

Next, contract a licensed disposal facility to accept the hazardous waste. If the facility is in Illinois, list the hazardous waste on a supplemental permit and obtain approval from the Illinois EPA. Because approval is subject to waste compatibility segregation, especially in the case of laboratory waste, determine general chemical families based on reactivity. All laboratory waste packed in a single drum must be compatible to avoid violent reactions. For example, one drum may be packed with inorganic acids and oxidizers; another may contain insecticides, pesticides, herbicides, heavy metals and their salts, reducing agents, alkaline caustics, cyanides, sulfides, and chlorides; and a third drum may contain organic solvents, organic acids, and inert organic chemicals. Each drum containing laboratory wastes must have an itemized list showing the name and quantity of every chemical in the drum. This list must be attached to the permit.

After approval by the disposal facility and state EPA, proper packaging is the next step. An acceptable packaging procedure is as follows. Place approximately 2 to 3 inches of absorbent material in the bottom of an open-head, DOT-approved, 55-gallon steel drum. Fill it one-third full with containers of laboratory waste, add a sufficient amount of absorbent material, and gently agitate the drum to allow absorbent material to fill in spaces around the containers. This process will reduce breakage in transit. Pack the middle one-third of the drum in an identical manner. Repeat the procedure for the top third of the drum, but allow 2 to 3 inches at the top of the drum for more absorbent material. The large size bolt (5/8) and ring should be used for locking the lid on the drum to ensure integrity during shipment and disposal.

A manifest itemizing the contents of each drum must accompany the shipment. The DOT regulations for labeling drums of hazardous chemicals (whether waste or raw materials) must be observed. Consult Title 49 of the Code of Federal Regulations for lists of regulated chemicals, proper shipping names, hazard classes, labeling requirements, exceptions, and packaging requirements. Determine the hazard class for drum of laboratory wastes (e.g., corrosive, poison A, poison B, flammable liquid, flammable solid, poison gas, oxidizer, or organic peroxide) and affix the proper hazard label to the drum. When properly packaged and labeled, the drums are ready for shipment.

The final step is shipment of the drums to the contracted licensed disposal facility. In some states (e.g., Illinois), a licensed waste hauler must be employed.

SUMMARY

Proper disposal of wastes will require considerable effort. An institution, may need to develop a new department for waste disposal. Also, the possibility of recycling some chemical wastes should be investigated, because reuse would be economically desirable and because landfill space is limited. As technology progresses, incineration is another alternative to be considered.

The reluctance of many people to accept disposal facilities, especially in their own neighborhoods, threatens the survival of the dispos-

al industry. The industry desperately needs assistance in public education from all waste generators. Chemical waste is generated during the manufacture of every product. Therefore, everyone must either assume responsibility for pollution control and promote environmentally sound disposal of chemical waste or do without these products that contribute to our high standard of living.

SESSION 3

LOW-LEVEL RADIOACTIVE WASTE

INTRODUCTION TO SESSION ON LOW-LEVEL RADIOACTIVE WASTE

Warren H. Malchman

The growing apprehension about nuclear materials may result in the unavailability of disposal sites for low-level radioactive materials. The nuclear accident at Three Mile Island has caused problems for the nuclear industry in general and teaching and research institutions utilizing radioactive materials.

In the past year, costs for the disposal of nuclear waste have surged upward. Price increases and disposal site regulations have had a debilitating effect on nuclear industry operations and related activity. Site shutdowns and cutbacks have forced the utilization of more expensive alternate sites. Site shutdowns have also resulted in an increase in the number of regulations and much stricter enforcement which will necessitate more involved procedures with regard to all aspects of low-level radioactive waste disposal operations.

It's important to understand why the disposal of low-level radioactive waste involves huge expenses and widespread concern, especially as it relates to research and teaching institutions. To understand the basis of the problem, we need to examine Federal licensing requirements for byproduct materials listed in the Code of Federal Regulations, Title 10, Part 30.18. The Code states that any person (and it is important to emphasize "person") is exempt from requirements for a license set forth in the regulations to the extent that such a person receives, possesses, uses, transfers, owns, or acquires byproduct material in individual quantities that do not exceed limits set forth in the Code of Federal Regulations, Title 10, Part 30.71, Schedule B. This means that any person can acquire and possess radionuclides in limited quantities without control (for example, ^{14}C -- 100 μCi, ^{3}H -- 1000 μCi, ^{125}I - 1 μCi, ^{60}Co - 1 μCi, and so on). It is important to emphasize that this applies to individual possession. Licenses issued to institutions do not permit unregulated exempt quantities. The Nuclear Regulatory Commission has long contended that unless one regulates the "exempt" quantities, one cannot

As Director of the Office of Radiation, Chemical, and Biological Safety at Michigan State University, Mr. Malchman is responsible for the development and implementation of a comprehensive radiation, chemical, and biological safety program. He has extensive experience in radiation safety and has presented papers at international conferences. He holds a B.S. from the University of Buffalo, and an M.S. from the University of Rochester.

determine when there is an accumulation to licensable levels. Licensees must revert to permissible air and water levels as the lower limit below which no concern about radioactivity is necessary. These maximum permissible concentrations in air and water are listed in the Code of Federal Regulations, Title 10, Part 20, Appendix B, Table II, which pertains to unrestricted area permissible levels.

The law is different in its application to institutions vs. individuals. Fear of high-level radiation from accidents at nuclear plants has spread a fear of all radioactive materials regardless of quantity. There is general agreement that present government regulations on low-level waste should be revised and that hospitals and colleges need not go to great expense to dispose of materials containing minute amounts of radioactivity. These could be safely handled by conventional disposal methods. Without more realistic solutions for disposal of low-level wastes, the magnitude of medical and biomedical research and treatment efforts will have to be drastically curtailed, and perhaps eventually halted.

APPLICATION OF NUCLEAR REGULATORY COMMISSION REGULATIONS TO UNIVERSITY WASTE DISPOSAL PRACTICES

Carl J. Paperiello

The Code of Federal Regulations (CFR) authorizes several methods of disposal of byproduct radioactive material. These methods include release of radioactive gases and liquids to the environment, disposal of radioactive substances as directed in 10 CFR 20.301, and transfer by Nuclear Regulatory Commission (NRC) licensees to other licensees for ultimate disposal. The disposal of radioactive wastes is a major problem for universities, and incidents have occurred involving the handling of university waste.

Several methods of disposal of byproduct radioactive material are authorized by Nuclear Regulatory Commission (NRC) Regulations in the Code of Federal Regulations, Title 10, Parts 20 and 30 (10 CFR 20 and 10 CFR 30). These methods include release of radioactive gases or liquids to the environment, as authorized by 10 CFR 20.106; disposal of radioactive substances, as directed in 20 CFR 20.301; and transfer by NRC licensees to other licensees for ultimate disposal, as authorized by 10 CFR 30.41.

Certain conditions govern the release of unrestricted radioactive material to the environment. Material released as liquid must be either soluble or readily dispersible in water, and at the point of release, it must meet concentration limits specified in 10 CFR 20. Radioactive gases that are released must also meet concentration limits specified in 10 CFR 20. Disposal in sanitary sewers is authorized by 10 CFR 20.303; however, certain concentration limits must be met and the overall release limit is 1 curie per year. Burial in soil is currently authorized by 10 CFR 20.304.

The amount of waste per burial and the number of burials permitted per year are limited by 10 CFR 20. Recent rulings have proposed eliminating this method of disposal except as specifically authorized in an NRC license. As of January 28, 1981, this method of disposal will be prohibited except as specifically authorized in an NRC license. This

As Chief of the Materials Radiological Protection Section 1 in the Region III Office of the Nuclear Regulatory Commission, Dr. Paperiello supervises the inspection program for materials licenses in Illinois, Iowa, Minnesota, Missouri, and Wisconsin. His experience includes work as a radiation specialist and research scientist. He holds a Ph.D. from the University of Notre Dame.

provision of 10 CFR 20 will probably be greatly restricted by the end of 1980. A facility is permitted to incinerate waste, as authorized by 10 CFR 20.305, if it has obtained an NRC license. Transfer of a license to an approved recipient, as governed by 10 CFR 30.41, is the most widely used waste disposal method. If a site can be found that will accept the material, there is almost no limit on the amount of waste that can be transferred.

Current problems in waste disposal involve the transfer of waste to an authorized recipient for ultimate disposal by burial. The closing of burial sites in West Valley, New York; Maxey Flats, Kentucky; and Sheffield, Illinois, has resulted in a significant increase in disposal cost because of longer shipping distances and higher fuel costs.

Currently, only three states operate approved burial sites for the disposal of radioactive waste. With the shipment of radioactive waste from Three Mile Island, these three states perceived themselves as the nuclear waste dumps for the rest of the country. This perception was compounded by the public's increased awareness and concern with the hazards of chemical waste dumps. None of these citizens wanted a nuclear "Love Canal" in their state.

Furthermore, after the Three Mile Island accident heightened the public's awareness of the activites of the nuclear industry, several transportation incidents occurred at the burial site in Beatty, Nevada. These incidents, all involving out-of-state shipments of nuclear waste, caused the Governor of Nevada to close the site. The Governors of the remaining two states with operating sites, noting that they had similar problems, closed or threatened to close their sites unless corrective action was taken. The NRC reached an agreement with the Governors of these three states to place NRC inspectors full time at the burial sites to inspect incoming waste shipments. At the time of the agreement, the NRC had no jurisdiction over the shipment of small quantities of radioactive material (amounts less than Type B), which were under the jurisdiction of the Department of Transportation (DOT). Therefore, on December 3, 1979, 10 CFR 71 was changed to require NRC licensees to comply with DOT regulations found in 49 CFR 170-179. Also published in the Federal Register at the time of the agreement were the enforcement sanctions that would be used in the event of noncompliance.

The NRC still has inspectors at the burial sites to examine incoming shipments of waste. In cases of noncompliance with NRC or DOT regulations, enforcement action is taken, which includes the issuance of civil penalties.

The disposal of radioactive wastes involves two major problems for universities. The first concerns the disposal of liquid scintillation vials. Because these vials contain an organic liquid that is not miscible with water, they cannot be released to either the environment or the sewer (pursuant to 10 CFR 20.106 or 10 CFR 20.303). Their volume and the flammable nature of their contents preclude burial (pursuant to 10 CFR 20.304), an option that probably will not be available by the end of 1980. Therefore, incineration (pursuant to 10 CFR 20.305) and transfer of liquid scintillation vials (pursuant to 10 CFR 30.41) are the only practical alternatives for the disposal of these substances. The latter option has been used most often. The second problem involves

the disposal of radioactive animals and other biological media. This problem is compounded if biohazards are also involved. Incineration and transfer of radioactive animals and other biological media are generally the only viable alternatives for the disposal of these substances. Both of these waste disposal problems are compounded by the fact that most university waste is either flammable or combustible.

Four incidents involving the handling of university waste have been reported to the NRC Region III office. The first incident involved what appears to be a generic problem--corrosion of waste drums. Storage of these drums in damp areas for long periods of time had resulted in corrosion from the outside. Also, corrosive chemical or biological material had attacked the steel and caused corrosion from the inside out. Storage in this manner violates a DOT regulation [49 CFR 173.392(c)(1)] that requires material to be packaged in strong, tight parcels to prevent leakage of radioactive material during transportation. (It should be noted that corrosion also can be caused by liquid scintillation fluids and tissue solubilizers.)

The discovery of a leaking corroded drum in a shipment arriving at a burial site can result in a civil penalty from the NRC. In addition, the state could ban the shipper from the site.

The second incident involved a drum containing an isotope of a type and quantity not indicated on the shipping papers. In this labeling violation of the DOT regulation, the shipping papers indicated that the drum contained small quantities of ^{3}H and ^{14}C. They did not indicate the presence of a much stronger ^{90}Sr source. This noncompliance can result in a civil penalty. University health physicists must particularly guard against the placement of other hazardous substances in drums reserved for radioactive (radwaste).

The third incident involved the burial of material in violation of limits established by 10 CFR 20. In such cases, the NRC may require the licensee to dig up the material and dispose of it properly or obtain a license amendment authorizing the burial. In the latter case, the licensee must demonstrate that the material would not represent a hazard or potential hazard if allowed to remain in its current location.

The fourth incident involved a nonradiological issue. Because toluene and xylene used in liquid scintillation fluids are flammable, radioactive waste containing these liquids must be stored in accordance with local fire codes.

A long-term solution to the four problems raised by these incidents would be to open new regional burial sites that include faclities for disposal of flammable and combustible material by incineration as well as solidification facilities for aqueous liquids. All long-term solutions will take years to implement; however, short-term solutions can be implemented now.

One short-term solution is to prohibit the disposal of nonradioactive material in radwaste drums. In some laboratories using radioactive material, all waste is disposed of in the radwaste drum, a practice that should no longer be allowed. Waste should be surveyed and segregated.

A second short-term solution is to segregate and hold short-lived radioactive material for decay and eventual disposal as normal trash. I

have frequently found short-lived isotopes such as ^{99m}Tc, ^{67}Ga, ^{313}I, ^{51}Cr, and ^{32}P in radwaste barrels in waste haulers' wastehouses. I have also dicovered drums containing only short-lived material that would have decayed to background levels before reaching the burial site. The second solution can be made practical through careful segregation of isotopes having half-lives as long as 60 days. If this method causes the university to exceed its possession limits, the NRC Materials Licensing Branch can issue a license amendment authorizing an increase in the limits. In this case, the licensee will be asked to describe his storage facility to ensure that material is properly secured and presents no radiation hazard to the public. Otherwise, a license amendment is not needed to use this method.

A third short-term solution is the use of incineration. In 45 FR 67018, published October 8, 1980, it is proposed that 10 CFR 20 be amended to allow the release of up to 5 curies per year of ^{3}H and 1 curie per year of ^{14}C to the sewer in addition to the 1 curie of material now permitted. Animals and liquid scintillation vials containing ^{3}H or ^{14}C below certain limits could be disposed of without regard to radioactivity. The NRC will grant a license amendment authorizing incineration (pursuant to 10 CFR 20.305) if the licensee can show that the airborne concentrations at the release point will not exceed 10 CFR 20 limits and the ash will be handled properly. In response to frequent calls from licensees who inquire about the procedure for building an incinerator, I suggest they hire a local contractor who knows how to build an incinerator that meets all local and state ordinances and Federal EPA standards for nonradioactive incineration. Licensees should then demonstrate that their incinerator will meet NRC requirements. For university and hospital waste, NRC requirements are usually easy to meet because the specific activity of the material to be incinerated is very low. The major problem usually involves meeting the regulations concerning nonradioactive pollutants.

If all of the short-term solutions are adhered to, the only waste a university would ship for burial would be dry, noncombustible radioactive material with a half-life in excess of 60 days. For most institutions, this would be a small fraction of the waste currently being shipped.

SAFETY CONSIDERATIONS IN DISPOSAL OF LOW-LEVEL RADIOACTIVE WASTE

A. J. Solari

Evidence indicates that the fastest-growing type of low-level radioactive waste poses little danger to human health. Further, safe disposal of all radioactive waste seems possible. We in universities should properly dispose of our own waste and help educate the public about safety considerations.

First, we must define low-level radioactive waste. Although an adequate definition does not exist, we can arrive at a working definition by eliminating what is not low-level. We can eliminate high-level waste, which is legally defined as reactor fuel elements and the first solvent extractions from them. We can eliminate radioactivity in its natural, unrefined, or unconcentrated states. We can also eliminate transuranics because they are usually treated separately. Everything else can be considered low-level waste.

One difficulty with this definition is that the quantity of radioactivity in an item considered low-level waste varies enormously. At the upper end, university kilocurie irradiator sources are "low-level waste." At the lower end, there is scarcely any limit. If measurement or calculation reveals activity above the natural background level, the waste is considered radioactive. (Nobel Prize winner Yalow of radio-immuno-assay fame testified that if she injected into an animal an amount of carbon-14 and potassium-40 equal to the quantity nature had put in her body, she would have to treat the animal as radioactive waste.) Thus, the activity range of low-level radioactive waste encompasses 14 to 15 orders of magnitude.

The physical form of the material varies from animal carcasses and other biological agents to paper, plastic, glassware, and metal. Individual items vary in size from contaminated hypodermic needles to building rubble or accelerator magnets.

Where does the bulk of institutional low-level waste originate? A study by the University of Maryland for the Nuclear Regulatory Commission (NRC) estimated that medical and academic institutions shipped 7771 cubic meters of low-level waste for burial in 1977. Medical institutions supplied 7 percent of this waste, biological research institutions accounted for 79 percent, and other sources provided the remaining 14 percent.

Mr. Solari is Director of the Radiation Control Service of the University of Michigan.

That the life sciences generate the bulk of the waste is no surprise to the university health physicist. Our engineers and physicists purchase a source the size of a cigarette filter, and it is the same size when they turn it in for disposal as radioactive waste. On the other hand, those working in biological research often receive an ounce of radioactive solution and turn in for disposal 150 pounds of glassware, animal carcasses, excreta, and vials.

The Maryland study of waste disposal in 1977 reported that a total of 1688 Ci was shipped; 81 percent (1367 Ci) of this was hydrogen-3, which along with carbon-14 would have a long-range impact. The study also noted the fastest-growing waste form was liquid scintillation waste, which by any criteria is considered low-level waste. According to the July 1975 issue of the newsletter Health Physicist, a survey at the University of Colorado, which was verified by studies at eight other institutions, revealed that the average specific activity of these solutions is only 0.0006 μCi/ml.

How dangerous is this fast-growing waste? In NUREG-0656, the NRC calculated the dose to a maximally exposed individual from incinerator effluents produced in the disposal of liquid scintillation waste by combustion. The assumptions underlying the calculations were extremely conservative and thus yielded results higher than would be expected from an actual facility. These results were normalized to 1 Ci per year for tritium and 0.01 Ci per year for carbon-14. Inhalation of hydrogen-3 would expose an individual to 0.04 mrem per year, and ingestion of hydrogen-3 would be equivalent to a dose of 0.512 mrem per year. Inhalation of carbon-14 would cause exposure to 0.0114 mrem per year, and ingestion of carbon-14 would result in a dose of 3.09 mrem per year.

Professor Whipple in "The Environmental and Ecological Forum 1970-1971" assumed that a powerplant would release 10,000 Ci of tritium to the environment. He claimed that until the last of these tritium atoms decayed, the total resulting radiation exposure of the world population would be "1.3 man-rem spread over the whole teeming mass of humanity." According to Whipple, if all the years of life lost because of the tritium produced by a nuclear powerplant in one year were added, the result would be one-tenth of a man-year. The release of 1 Ci of tritium per year from the combustion of scintillation waste would shorten a total life span by 5.25 minutes. Further, the Colorado survey indicated that 440,000 gallons of scintillation waste is needed to produce 1 Ci.

Eisenbud (in Science) has noted that both hydrogen-3 and carbon-14 are produced naturally by interaction of cosmic rays with the atmosphere. Because tritium is produced at a rate of 1.9 million Ci per year and carbon-14 is produced at a rate of 38,000 Ci per year, steady-state global inventories amount to 34 million Ci of hydrogen-3 and 315 million Ci of carbon-14. Eisenbud maintains that compared with these quantities, the amounts of hydrogen-3 and carbon-14 present in the wastes from clinics and laboratories are minimal; roughly 2390 facilities in the United States used one or both of these nuclides in 1978 and shipped a total of 720 Ci of hydrogen-3 and 221 Ci of carbon-14 to waste burial grounds.

These data suggest that the fastest-growing category of low-level radioactive waste is scarcely a radioactive hazard at all, but is instead a chemical or fire hazard. At present, however, liquid scintillation waste is still considered radioactive waste.

Universities use other radionuclides. How hazardous are these when disposed of in an appropriate fashion? For most institutions proper disposal means shipping waste to a commercial burial ground, although a few institutions have burial sites of their own.

The NRC study "Evaluation of Alternate Methods for the Disposal of Low Level Radioactive Wastes" (NUREG CR-0680) discussed a hypothetical shallow land burial facility. Some of the parameters are listed in Table 1. It was assumed that after 150 years the site would be reclaimed, people would move in, and wells would be drilled. To protect these individuals and reduce their radiation exposure to permissible limits would require that wastes not exceed the maximum concentrations indicated in Table 2. The concentrations were used to calculate the amount of radioactive material that could be packaged into a single 55-gallon steel drum. The effect of 150 years of isolation is obvious from the value shown for cobalt-60. This NRC study (NUREG CR-0680) could lead to a more useful definition of low-level radioactive waste.

Universities with research reactors also generate high-level radioactive waste. How dangerous is the disposal of such waste? Plans for disposal of high-level radioactive waste involve deep burial in stable geological formations after placement in a fireproof, waterproof glass matrix. In the June 1971 issue of Scientific America, Professor Bernard Cohen calculated that if nuclear-powered facilities generated all U.S. electricity, buried nuclear waste would cause four fatalities in the first million years.

What if the stable geological formations and the glass matrix failed to meet expectations? Professor Cohen calculated that random burial at a depth of 2000 feet (e.g., under houses, schools, farm lands, and water supplies) would produce a death rate of 1.1 per year during the first 200 years and 0.4 per year thereafter.

Although experimental verification of these calculations is impossible, one encouraging sign is the "Okla Phenomena," which occurred in what is now the Republic of Gabon in Africa. At least four reactor zones went critical 1.8 billion years ago and produced an average of 20 kilowatts of terminal power for half a million years. In "The Health Hazards of Not Going Nuclear," Peter Beckmann discusses this incident. He states that 12,000 pounds of waste fission products and 4,000 pounds of plutonium (virtually all decayed now) have not budged an inch out of their reactor zones in 1.8 billion years. This situation was produced by blind chance, and no particularly favorable chemical or other immobilization mechanisms were at work. Beckmann asks, "Cannot men do at least as well?"

If these reports are true, why is there resistance to burial grounds? Why have operators of such grounds shut down or restricted their intake? Why do we need this conference if low-level radioactive waste is a low health hazard compared with other everyday hazards? Although part of

TABLE 1. PARAMETERS OF A SHALLOW LAND BURIAL FACILITY

No. of trenches	315
Measurements of each trench	100 m by 8 m by 6 m
Minimum distance to site bounds	160 m
Distance from trench bottom to aquifer	10 m
Distance to surface water (river)	1000 m
Water velocity in aquifer	100 m/yr
Depth at which trench is covered	1.0 m

TABLE 2. MAXIMUM WASTE CONCENTRATIONS AT A SHALLOW LAND BURIAL FACILITY

Waste	Maximum concentration, $\mu Ci/cm^3$	Activity per 55-gallon drum	Pathway
^{3}H	15	3 Ci	Well water
^{14}C	0.024	5 mCi	Food channel
^{60}Co	55,000	11,450 MCi	Direct exposure
^{90}Sr	0.17	35 mCi	Food
^{239}Pu	1.0	208 mCi	Reclamation
^{137}Cs	8.3	1.7 Ci	Direct exposure

the explanation may be agitation by those exposed to nuclear power, I believe that a change in social awareness and expectations is the more basic reason. We live in the era not only of Three Mile Island, but also of Love Canal and the Valley of the Drums. Routinely the evening news reveals a chemical dump just discovered not far from homes or schools. What's in those drums? No one knows. Who put them there? No one steps forward. Who is going to remove the waste? Silence. Who is going to guarantee that homes, schools, etc. are safe? No one. Who is responsible for the mess?

Is it surprising that the public now expects each new technological development to be analyzed thoroughly and understood from start to finish before a commitment is made by government or large industry to that technological development? Would the State of Michigan have approved the use of polybrominated biphenyl (PBB) as a fire retardant if the citizens had known that it could so strongly affect so many people? Would the public of yesterday have approved the development of the horseless carriage if they had known that it would cause 50,000 deaths per year?

The public wants to ensure that there are no more Love Canals. Can the generators of radioactive waste convince the public that precautions are being taken, that strict standards are being observed, and that every effort is being made to protect the environment from radiation, the "ultimate pollution." Bumper stickers proclaim "Be active, not radioactive." Although the most vocal groups direct criticism primarily at powerplants, they are not reluctant to confront universities.

In part, the nuclear industry is a victim of its own behavior. Waste disposal was a low-priority item. Some effort was expended to find a use for fission products, but that effort foundered. After that, scarcely enough high-level waste was produced to justify a large commitment. Besides, there was always time to attack the problem in the future. Then some tanks at Hanford leaked. Does this inspire confidence?

Salt mines in Kansas were investigated and found satisfactory for disposal of high-level radioactive waste. Political opposition occurred, however, and flaws were found that eliminated further consideration of that site. Again confidence in the Atomic Energy Commission was shaken.

Are we in universities doing everything in our power to earn the confidence of the public in our own waste handling system? I think we need to do more.

To summarize, I believe strong evidence suggests low-level radioactive waste can be disposed of safely and with minimal impact on human health. We in universities need to make certain that we do our part by properly packing, labeling, and monitoring waste and educating the public.

BIBLIOGRAPHY

Beckmann, P. The Health Hazards of Not Going Nuclear. The Golem Press, Boulder, Colorado, 1976.

Bell, M. D. Progress Report on NRC's Low-Level Waste Program. In: Proceedings of the 10th Annual National Conference on Radiation Control. HEW Pub. No. (FDA) 79-8054, pp. 254-256, 1979.

Blanchard, R. L., et al. Supplementary Radiological Measurements at the Maxey Flats Radioactive Waste Burial Site: 1976-1977. EPA-520/5-78-011, September 1978.

Eichholz, G. G. Environmental Aspect of Nuclear Power. Ann Arbor Science Publishers, Inc., Ann Arbor, Michigan, 1980.

Marshall, E. Radioactive Waste Backup Threatens Research. Science, 206:431-433, 1979.

Montgomery, D. M., H. E. Kolde, and R. L. Blanchard. Radiological Measurements at the Maxey Flats Radioactive Waste Burial Site: 1974 to 1975. EPA-520/5-76-020, January 1977.

Morisawa, S., et al., Radiological Safety Assessment for a Low-Level Radioactive Solid Waste Storage Facility: Preliminary Risk Evaluation by Reliability Techniques. Health Physics, 35:817-834, 1978.

National Academy of Sciences. The Shallow Land Burial of Low-Level Radioactivity-Contaminated Solid Waste. Panel on Land Burial, Committee on Radioactive Waste Management, Commission on Natural Resources, NRC, 1976.

O'Connel, M. F., and W. F. Holcomb. A Summary of Low-Level Radioactive Wastes Buried at Commercial Sites Between 1962-1973, With Projections to the Year 2000. Radiation Data and Reports, 15:759-767, 1974.

Shealy, H. G. Impact of the Proposed Federal Government Taking Over Low-Level Waste Burial Sites. In: Proceedings of the 10th Annual National Conference on Radiation Control. HEW Pub. No. (FDA) 79-8054, 1979. pp. 257-258.

Straub, C. P. Low-Level Radioactive Wastes. U.S. AEC Division of Technical Information, Washington, D.C., 1964.

U.S. Energy Research and Development Administration. Management of Wastes from the LWR Fuel Cycle. In: Proceedings of International Symposium, Denver, Colorado, July 11-16, 1976. ERDA Report No. CONF-76-0701 (ABSTS).

U.S. Environmental Protection Agency. Proceedings: A Workshop on Issues Pertinent to the Development of Environmental Protection Criteria for Radioactive Wastes, Reston, Virginia, February 3-5, 1977. U.S. EPA Report No. ORP/CSD-77-1, 1977.

Wheeler, M. D. Burial Grounds. In: Proceedings of Symposium on Management of Wastes From the LWR Fuel Cycle, July 1976. ERDA Report No. LA-UR-76-1722, 1976.

EXPERIENCES WITH VARIOUS DISPOSAL METHODS AT THE UNIVERSITY OF WISCONSIN-MADISON

Elsa Nimmo

Research and medical personnel at the University of Wisconsin-Madison generate approximately 20,000 ft^3 of low-level radioactive waste each year. This waste is in the form of animal carcasses, scintillation vials, packages of paper and plastic refuse, and 5-gallon containers of liquids. In order to handle this high volume, low-level radioactive waste in a safe and lawful manner, the university relies on a centralized system of collection and processing to prepare waste for disposal by incineration, burial in local landfills, and storage for decay or disposal by a commercial waste service. Past operating experience has demonstrated the value of stringent administrative and physical controls in the prevention of improper disposal of radioactive substances. The waste handling system and controls currently in use at the University of Wisconsin-Madison will be discussed.

I'd like to begin by presenting a brief overview of the radioactive waste handling program at the University of Wisconsin-Madison. Each year, university research and medical personnel generate approximately 20,000 ft^3 of low-level radioactive waste. This waste consists of animal carcasses, liquid scintillation vials, papers, plastic, and liquids. The university uses a central collection and processing system to prepare these wastes for disposal. Three full-time technicians are permanently assigned to waste disposal duties. We estimate that approximately one-half to one-third of their time is spent on radioactive waste, with the remainder spent on nonradioactive chemical and biological waste. These individuals are responsible for collecting the waste, preparing it for disposal, and maintaining the required records.

I should preface my next remarks by saying that we don't have any new solutions to the problem of low-level radioactive waste disposal. At the University of Wisconsin-Madison, we are currently using the same waste disposal methods that we've used in previous years. These methods are incineration, local landfill burial, storage and decay, and use of a commercial radioactive waste disposal firm. Many changes have been made in our radioactive waste handling pro-

Ms. Nimmo is Radiation Safety Officer at the University of Wisconsin-Madison. She is a member of the State Radiation Protection Council Subcommittee on Credentialing of X-Ray Technicians and a member of the Advisory Panel of the Senate Subcommittee on Uranium Exploration Safety. She holds a B.S. from the University of Redlands, California, and an M.S. from the University of Wisconsin-Madison.

gram, but they have been in the areas of organization and control.

One problem that all waste disposal services continually face is the difficulty in obtaining cooperation from the individuals who generate the waste. It isn't that lab workers or faculty members intentionally cause problems, but, like people everywhere, they tend to consider an item properly disposed of once they throw it into a waste container. Thus, a critical part of any radioactive waste disposal program is education of the individuals generating the waste.

The university's efforts in waste-generator education involve the following components:

1. We provide detailed written waste handling instructions. We specifiy exactly what type of packaging is aceptable, including catalog numbers if persons choose to order packaging materials from university stores. We also provide what we hope are simple-to-use labels.

2. Before a new faculty member can become authorized to use radionuclides on campus, a health physicist visits the facility. One purpose of this visit is to discuss the proposed procedures for handling wastes. Because many of the researchers may have used radionuclides at another institution, this is a good opportunity for us to clarify our requirements.

3. Students and laboratory workers are required to pass an exam on radiation safety before using radionuclides. This exam includes questions on proper waste disposal procedures.

4. Probably the most valuable part of our educational effort takes place in discussions between the health physics staff and laboratory workers. In the course of their regular unannounced inspections, health physics technicians ask lab workers to explain and demonstrate how radioactive wastes are handled in their lab. This gives lab workers an opportunity to ask questions and to clear up any misunderstandings.

5. Finally, when the wastes are collected, health physics technicians pay close attention to be certain that wastes are packaged and labeled correctly. Whenever a problem is noticed (e.g., the label does not specify the quantity of material or a package identified as containing tritium has a surface exposure rate of 2mR/hour), the technicians immediately contact the authorized faculty member. If problems persist with a particular research group, a citation may be issued and the authorized user may have his or her radionuclide ordering privileges suspended.

This discussion about the educational program is worthwhile for several reasons. First, we need to be certain that the packaging and information provided are adequate to protect our own personnel from nonradiation hazards as well as from possible radiation hazards. For example, people need to be reminded regularly to package syringes and glassware correctly. It is somewhat disturbing to be poked with a syringe while collecting waste. Second, if we are to dispose of radioactive waste correctly, we have to know what type of waste we are dealing with. Third,

we have other requirements related to practical considerations that are unique to our particular disposal system. For instance, we tend to get very perturbed if we find solids mixed in with the liquids given to us for incineration. If liquids contain sludge, plastic gloves, animal tissues, or other solids, the half-life of the pumps used to transfer liquids from their storage tanks to the incinerator will drastically decrease and the whole system will soon be down for repairs. It is therefore important for the health physics staff to provide lab workers with detailed information on our requirements, including, if possible, the reasons behind them.

Now I'd like to discuss our waste collection system. Both radioactive and nonradioactive animal carcasses are collected three times a week and other solid and liquid chemical and radioactive waste is collected twice a week. Researchers phone the Safety Department in advance to request collection of the waste. This department hauls the wastes to locked storage cabinets (animal carcasses are hauled to locked freezers), which are usually located on the loading docks of the buildings. Occasionally, the freezers or cabinets may be full or a person may want to dispose of waste that would cause the exposure rate at the cabinet surface to exceed 2mR/hour. When this happens, this person arranges for the waste disposal technicians to call him or her when they arrive at the building. They then transport the waste to the loading dock.

As I mentioned earlier, the technicians thoroughly check the waste they collect. All packages are scanned with a Geiger-Muller (GM) counter regardless of whether they are identified as containing radioactivity or chemicals only. The labeling is checked to be certain that the material, quantity, and authorized user are indicated. Except for wastes that will be incinerated, everything is taken directly to the university's waste storage area and sorted. Radioiodines, phosphorous-32, and other short-lived materials are put in storage areas reserved for decaying waste. Other long-lived or relatively high-level solid wastes are packed into 55-gallon drums that are approved by the Department of Transportation (DOT) and eventually shipped to a commercial waste disposal service. By volume, the majority of the waste consists of paper and plastic lab bench covers, paper towels, gloves, etc., possibly contaminated with small quantities of tritium or carbon-14. This waste is segregated for future burial in a local landfill.

Now I'd like to discuss each disposal method in more detail.

INCINERATION

Our current license from the Nuclear Regulatory Commission (NRC) permits us to burn a combined total of 50 millicuries of carbon-14 and tritium per day and a total of 1 millicurie per incineration of all other byproduct material. For the past 1-½ years, incineration of radioactive materials has been limited to two incinerators: one used for solvents and radioactive liquids and the other for animal carcasses and scintillation vials. A member of the health physics staff must first check all waste to be burned in the incinerators. An individual lab worker or faculty member cannot bring radioactive waste to an incinerator and have it burned.

In 1979, the solvent destructor was used to dispose of approximately 1-½ curies of tritium and 220 millicuries of carbon-14 contained in a total of 22,000 gallons of liquids. Calculations based on Sutton's Diffusion Equation show that the resulting worst-case air concentration averaged over 1 year was 9/100 of 1 percent of the maximum permissible concentration (MPC) for an unrestricted area. This concentration is for any point of reasonable human occupancy. By "any point of reasonble human occupancy," I mean any spot to which persons might have access without resorting to extreme measures. In our current license renewal, increased incineration limits are requested primarily to allow incineration of radioactive liquids other than tritium and carbon-14 that will otherwise have to be solidified and shipped to a licensed disposal service.

In 1979, approximately 840 millicuries of tritium, 52 millicuries of carbon-14, and relatively small quantities of an assortment of other radionuclides were disposed of in the solid waste incinerator. The resulting maximum air concentration averaged over 1 year at any point of reasonable human occupancy is calculated to be less than 5 percent of the MPC for an unrestricted area. Again, Sutton's Equation was used and a worst-case was assumed (e.g., it was assumed that the entire quantity of each radionuclide was present in the effluent).

Individual researchers currently are not charged for any waste disposal service except for the incineration of liquid scintillation vials. These charges were established because scintillation vial incineration is an unusually labor-intensive operation. The operator must place the vials in the incinerator a few trays at a time, adding additional trays every 10 minutes or more. The heat melts the plastic tops off the glass vials and ignites the contents. The incinerator operator must be careful to leave an ash buildup in the incinerator before burning vials to prevent the glass from melting on the hearth.

Although incineration has many advantages, it does not eliminate all of the burned waste. In 1979, the university shipped twenty-five 55-gallon barrels of ash to a licensed disposal service. This accounted for over half of all radioactive waste shipped to a commercial disposal service in that year. Any ash that causes GM readings to exceed the background level is considered radioactive and is packed directly into a DOT-approved 55-gallon drum as the incinerator is cleaned. If very low-energy, nonvolatile beta emitters are incinerated in the future, a more sophisticated system for beta analysis would have to be used to determine whether ash must be handled as radioactive waste.

LOCAL LANDFILL BURIAL

By volume, 50 percent of the collected waste currently is buried in a local landfill. Once again, the major radionuclides possibly present are tritium, carbon-14, and sulfur-35. Worst-case calculations have been done to evaluate the possible effects of this disposal method on water quality. In the following calculation, it was assumed that no radioactive material was leached from the soil until the landfill had reached the end of its useful life and that in the following year, <u>all</u> of the radioactive material that had accumulated there in the previous 20 years (the average lifespan of a landfill in Wisconsin) was leached

out. If data for this university's 1978 landfill burial are used as annual averages and data on average annual Wisconsin rainfall are also used, this worst-case calculation would show that less than 5 percent of the MPC for an unrestricted area would be present in the leached water itself.

STORAGE AND DECAY

Disposal by decay is my favorite method. By meeting just a few conditions, it is an ecologically as well as economically pleasing disposal method. In order for institutions to take full advantage of this disposal method, their NRC license limits must be generous enough to allow them to hold radionuclides for decay while their stocks continue to be replenished. They must also have available a secure, well-shielded storage area with sufficient capacity for the types of wastes they wish to store. At the University of Wisconsin-Madison, we are fortunate to have an underground storage area that at one time held what must have been an enormous quantity of molasses. A ventilation system is currently being installed because the use of a compactor is anticipated in the future.

SHIPMENT TO A LICENSED COMMERCIAL WASTE DISPOSAL SITE

Like other institutions, the University of Wisconsin-Madison has had problems with shipment of low-level radioactive wastes in the past year. In an average year, one to three such shipments are made; in 1979, a single shipment of forty-seven 55-gallon barrels went to the NECO site in Washington State. At this time, no animals, scintillation vials, or solidified liquids are being shipped.

The disposal of low-level radioactive waste appears likely to remain one of the major problems faced by radiation safety programs at colleges and universities in the near future. Each institution must explore for itself the possibility of using alternative disposal methods in case one or more disposal methods become unavailable.

EXPERIENCE WITH INCINERATION OF LOW-LEVEL RADIOACTIVE WASTE AT THE UNIVERSITY OF ILLINOIS

Hector Mandel and Lorion J. Sanders

Since July 1977, the University of Illinois at Urbana/Champaign (UIUC) has been disposing of liquid scintillation counting fluid (LSCF) by incineration. For two and a half years, LSCF has been filtered and added to the No. 2 fuel oil used to fire the boilers at the UIUC Abbott Power Plant. Only minor problems were encountered during the first year, and these were related to equipment and corrosion. The use of stainless steel and a sealless pump has allowed the system to operate problem free for the past year. Local anti-nuclear forces and power plant employees expressed opposition during the first few months of operation, but a public meeting of the UIUC Radiation Hazards Committee and a training session with the power plant employees apparently convinced the public and the plant employees that incineration is the best method for disposal of LSCF. Since the power plant boilers are presently being converted to burn natural gas, a system is being designed and built to allow injection of LSCF into the gas-fired boilers.

Disposal of low-level liquid radioactive waste at the University of Illinois at Urbana/Champaign (UIUC) was not a problem until the Sheffield disposal site was shut down. Aqueous waste has always been disposed of through the sewerage or solidified with plaster of paris and then disposed of as solid waste. (Figure 1 shows the amount of solid waste disposed of per year.) Liquid scintillation waste, which is composed of volatile, flammable, and toxic organic compounds, cannot be disposed of through the sewerage, however, and is not easily solidified. Although it is inevitable that some of the liquid scintillation waste will find its way into laboratory sinks and down the drains, large-scale disposal of liquid scintillation waste through sewerage is very undesirable. Because the Sheffield disposal site is only 100 miles from the UIUC campus, it was easy to collect liquid scintillation waste and truck it there.

Mr. Mandel is Head of the Health Physics Section of the Division of Environmental Health and Safety at the University of Illinois. He holds a B.S. and an M.S. from the University of Illinois at Urbana-Champaign.

Mr. Sanders has served for 13 years as Health Physicist with the Division of Environmental Health and Safety at the University of Illinois. His experience also includes work as a health physicist on nuclear-powered ships. He is a graduate of Navy Nuclear Power School in New London, Connecticut.

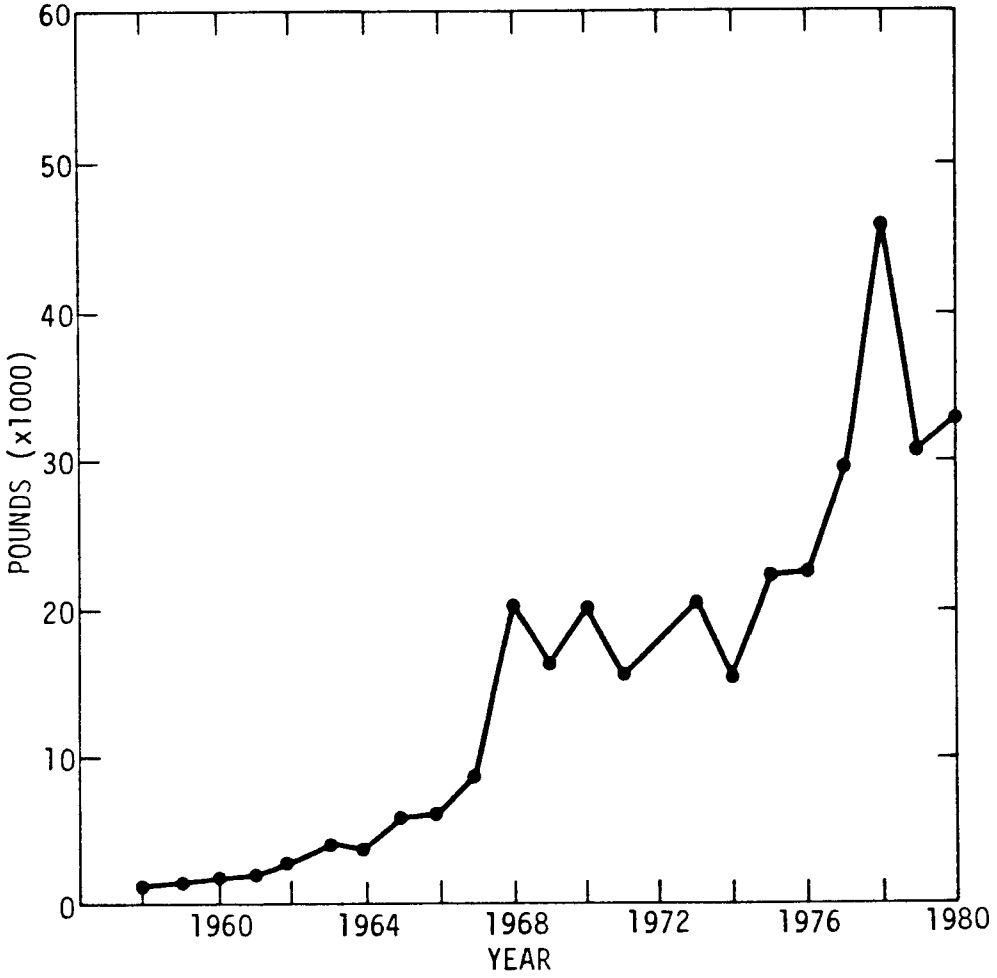

Figure 1. Solid radioactive waste.

Fortunately, by the time operations had ceased at the Sheffield waste site, the Nuclear Regulatory Commission (NRC) had granted UIUC approval (in the form of a license amendment) to incinerate liquid scintillation waste in the University Power Plant (Abbott Power Plant).

The liquid waste disposal system (Figure 2) consists of a tank that can hold up to 150 gallons of liquid, a feed pump, an automatic level-sensing device for the tank, and associated valves and piping. The entire system is located close to the site where the oil tanker trucks hook up to deliver fuel oil to a nearby 180,000-gallon day tank. The system is designed so that the metering pump automatically mixes the liquid scintillation waste with the fuel oil as it is injected into the day tank.

The University of Illinois paid about $2,000 to build and operate the liquid waste disposal system, but saved about $12,000 during the first 10 months of operations. The university encountered technical and political problems during the first year of operation, however.

The technical problems involved the waste feed pump and the waste storage tank. The first problem concerned the original metering pump, whose neoprene seals required an inordinate amount of maintenance. This original pump was replaced by a magnetically coupled, sealless, centrifugal pump, which has not required any major maintenance for more than a year. The other major problem concerned the original storage tank, which was made of cylindrical carbon steel. Because of extensive corrosion on the inside of this tank, the line filter frequently became loaded with flakes of rust. Last summer the original tank was replaced with a custom-built stainless steel tank in order to eliminate or at least minimize corrosion. Although the associated piping is all carbon steel, major corrosion problems are not expected to develop because the lines are frequently backflushed with fuel oil.

Another problem that developed involved the level gauge that was installed inside the original tank. This level indicator was basically a conductivity probe that frequently gave false readings as a result of changes in the conductivity of the liquid scintillation waste. Conductivity would change as a function of temperature or as a function of the impurities in the liquid scintillation waste. When the waste storage tank was replaced, a new level sensor was also installed. The new sensor is a pressure-measuring device, which is located under the tank.

The University Power Plant (Abbott Power Plant) burns an average of about 50,000 gallons of fuel oil per day. Stack gaseous release rate (Table 1) can be calculated easily by taking into account the amount of air required to burn each gallon of fuel oil. Thus, average permissible daily limits have been derived for the isotopes that appear in the liquid scintillation counting waste (Table 2). It is interesting to note that in 1 day, UIUC could burn twice as much ^{14}C as they purchase in 1 year, and an entire year's acquisition of ^{3}H could be burned in less than 2 months without exceeding the release limits. (Figure 3 shows orders of isotopes on a yearly basis.) Only small fractions of the purchased isotopes wind up in the liquid scintillation waste. Because release limits are very restrictive for radioisotopes such as ^{125}I and ^{131}I, it is necessary to set aside waste that contains ^{125}I and allow it to decay. (See Table 2.)

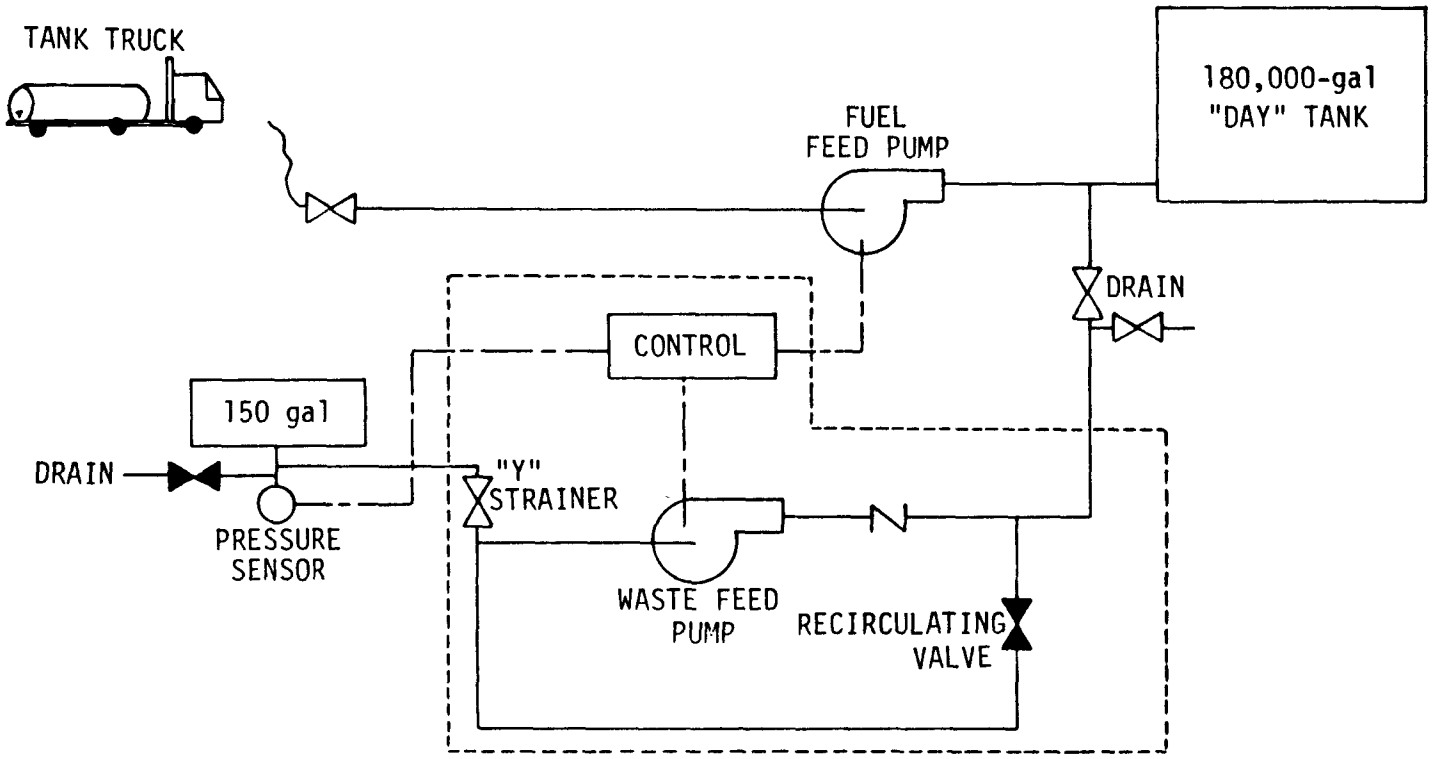

Figure 2. Liquid waste disposal system.

TABLE 1. ABBOTT PLANT STACK EMISSIONS

Fuel oil burned daily = 50,000 gal

Air requirement per pound of fuel oil = 14 lb air

University use of excess air ≅ 18 lb air

Combustion results in ∿ 5% increase in gas volume corrected to standard temperature and pressure (STP).

Thus, for each pound of fuel oil burned, the stack emits:

$$18 \text{ lb air} \times 454 \frac{g}{lb} \times \frac{10^3 \text{ cm}^3}{1.243 \text{ g(air)}} \times 1.05$$

$$= 6.6 \times 10^6 \text{ cm}^3 \text{ air/lb fuel}$$

Fuel oil weighs 7.5 lb/gal; thus, the daily emission is:

$$6.6 \times 10^6 \times 7.5 \times 50{,}000 = 2.5 \times 10^{12} \text{ cm}^3\text{/day}$$

TABLE 2. AVERAGE PERMISSIBLE DAILY LIMIT (APDL) AT THE ABBOTT POWER PLANT[a]

Isotope	APDL, mCi/day	Total burned in year		
		1977-1978	1978-1979	1979-1980
^{45}Ca	2.5	0.11	0.06	0.19
^{14}C	250	21.20	8.70	10.21
^{51}Cr	200	0.18	0.06	
^{3}H	500	22.32	613.35	115.88
^{125}I	0.20	0.17	0.39	0.09
^{32}P	5	2.19	5.63	5.89
^{35}S	22.5	0.09	0.17	3.13

[a] Based on data contained in 10 CFR 20 App. B, Table II, Column I; concentration at the point of release, based on 2.5×10^{12} cm^3/day.

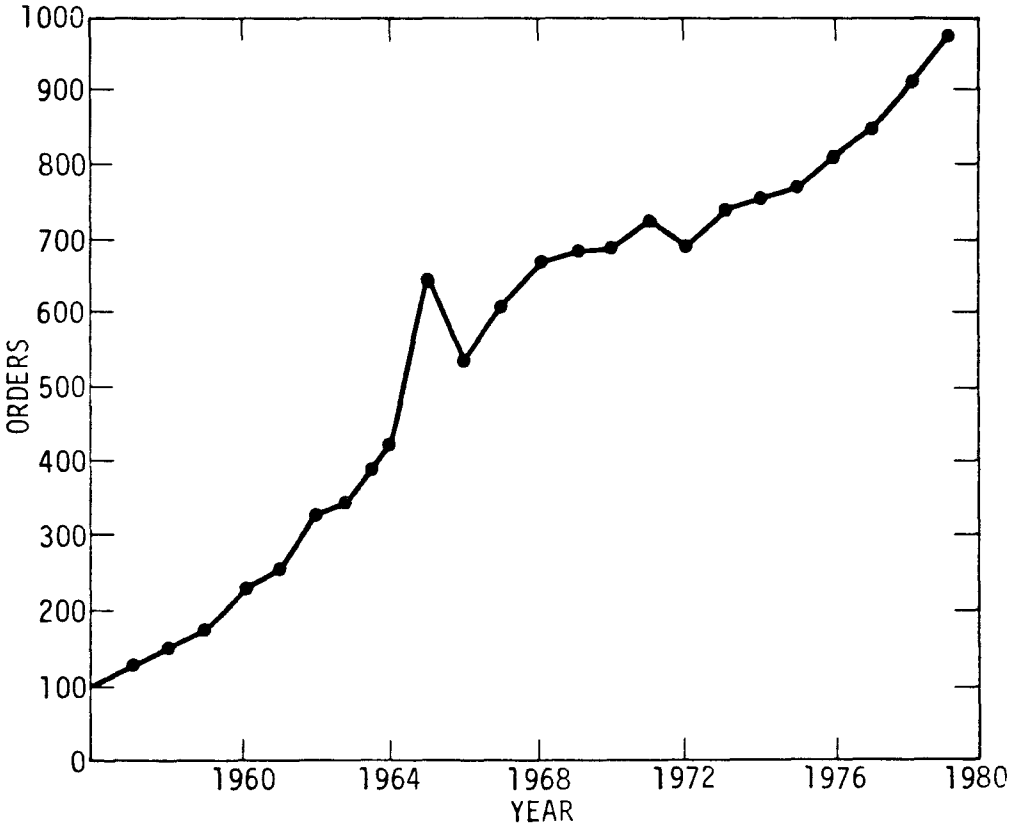

Figure 3. Isotope orders.

Political problems resulted when some of the power plant employees became alarmed after discovering that they were working near radioactive materials. The radioactive materials in the scintillation fluid are in such low concentrations, however, that posting of the area around the waste storage tank is entirely unnecessary. The workers at the plant were advised of the hazards involved in storage of the liquid scintillation waste at the power plant. They were told that the radioactivity in the liquid scintillation waste could very easily be disposed of through the sewerage; however, because the waste contains volatile, flammable, toxic, and possibly carcinogenic organic chemicals, the best way to dispose of it is by incineration.

It should be noted that the UIUC does not expect to be able to use this system again after this summer. The boilers at the Abbott Power Plant are presently being converted from fuel oil to natural gas, and plans are under way to convert to coal within the next few years. The UIUC currently has about 200 gallons of liquid scintillation waste in storage. The NRC has approved (Tables 3a and 3b) the incineration of waste in the natural gas boilers, but the injection system has not been designed or built. The advantage of the present system is that the waste is mixed with the fuel oil before the fuel is injected into the boilers. Injection of the liquid scintillation waste into the gas-fired boilers, however, will require a separate injection system with a nozzle. The UIUC is presently in the process of procuring the nozzle and associated equipment (Table 4). It should then be a relatively simple matter to install the pump and run the piping over to the boiler.

TABLE 3a. LICENSE CONDITIONS FOR BURNING LSCF IN GAS BOILERS

Airflow rate in both stacks at the Abbott Power Plant is 100,000 ft^3/min (average daily stack exhaust); therefore, the average daily stack exhaust for one stack is: 50,000 ft^3/min (STP).

$$50{,}000\ ft^3/min \times 60\ min/h \times 24\ h/day = 7.2 \times 10^7\ ft^3/day$$

$$7.2 \times 0.10^7\ ft^3/day \times 1728\ m^3/ft^3 \times 16.387\ cm^3/m^3 = 2.04 \times 10^{12}\ cm^3/day$$

Thus, for example, the power plant could burn a specified amount (shown in Table 3b) of a single radioisotope without exceeding the NRC environmental limits at the point of release.

TABLE 3b. AMOUNTS OF A SINGLE RADIOISOTOPE THAT COULD BE BURNED WITHOUT EXCEEDING NRC LIMITS

Isotope, $2.04 \times 10^{12} cm^3$	NRC limit,[a] μCi	Average permissible limit/day, μCi (mCi)
^{14}C	1×10^{-7}	2.04×10^5 (204)
^{3}H	2×10^{-7}	4.07×10^5 (407)
^{125}I	8×10^{-11}	163 (0.163)
^{131}I	1×10^{-10}	203 (0.203)
^{32}P	2×10^{-9}	4.07×10^3 (4.07)
^{35}S	9×10^{-9}	1.83×10^4 (18.3)
^{45}Ca	1×10^{-9}	2.03×10^3 (2.03)
^{47}Ca	6×10^{-9}	1.22×10^4 (12.2)
^{51}Cr	8×10^{-8}	1.63×10^5 (163)
^{85}Sr	4×10^{-9}	8.155×10^3 (8.15)
^{90}Sr	3×10^{-11}	61.16 (0.061)

[a] Based on data contained in 10 CFR 20 App. B, Table II, Column I.

TABLE 4. ESTIMATED COST OF MATERIALS FOR GAS BOILER INJECTION

Item	Amount needed	Cost per item	Total cost of items
3/8-inch (inner diameter) stainless steel, No. 316, Schedule 40	400 ft	$ 3.00/ft	$1,200.00
Injection nozzles	6	13.70	82.20
Toluene monitoring pump valves	1	1,816.00	1,816.00
Y-strainer	1	54.82	54.82
Couplers	20	1.69	33.80
Elbows	10	3.20	32.00
Tees	3	4.28	12.84
Check valve	1	130.00	130.00
Total			$3,623.42

SESSION 4

RESEARCH- AND HOSPITAL-GENERATED WASTE

WASTE DISPOSAL AT THE MEDICAL CENTER OF THE UNIVERSITY OF ILLINOIS

Raymond S. Stephens

This paper examines the main problems of hazardous waste disposal and then discusses the waste disposal standard used by the Medical Center of the University of Illinois. The central feature of this standard is color coding, and careful procedures have been developed for segregating, handling, and treating wastes.

The problem of waste collection and disposal has many solutions. If there were only one solution, we would all react to a grand pronouncement and solve the problem in short order.

BACKGROUND

First, let's examine the six main problems in hazardous waste collection:

Identification of type of waste. Wastes can be a solid, liquid, or gas. Further, they can be combustile or noncombustible; can vary greatly in weight, shape, and volume; and can have special characteristics such as odor, appearance, or putrescibility.

Identification of the source of the hazardous material. Major problems are encountered in identifying the sources of hazardous wastes. For example, materials that look similar can come from multiple sources. Collection systems traditionally bring similar materials together, names and labels on materials are generally not discernible, and retrieval of samples from the waste stream is undesirable.

Identification of hazards associated with each waste sample. We must identify the particular hazard associated with each waste sample before combining the samples. Labeling is of great importance because the cost of analyzing an unknown material is considerable and because the consequences of opening a container of such material can be significant. Simply classified, wastes can be flammable, combustible, or explosive; toxic; reactive; corrosive; infectious; and sharp. Yes, one of the features of hazardous wastes is simply

Mr. Stephens is Director of the Environmental Health and Safety Office of the University of Illinois at the Medical Center, Chicago.

the presence of sharp corners, edges, or points, which can lacerate and puncture the handler.

Segregation of waste by types and hazards. Several advantages result from segregating wastes by type and hazard at the points where they are produced. Segregation increases the efficiency of the treatment processes if similar wastes are combined at the beginning of the waste stream. Also, segregating facilitates waste handling by gathering materials of like consistency, shape, and size. Another advantage is that segregation prevents dangerous interaction between different types of wastes, such as contact between corrosive and flammable material.

Handling of wastes at sources. Hazardous wastes require either treatment where they are produced or packaging for transportation.

Treatment of wastes. We have six means of treating wastes: incineration, sterilization, chemical reaction, physical alteration, decay, and recycling. Any of these, or any combination of them, can decrease the volume of hazardous wastes and even make wastes fit for disposal as ordinary rubbish in the waste stream. Let me emphasize that the persons who produce wastes (and I insist that wastes are produced by persons, not by departments, colleges, or firms) are best able to recommend and institute the applicable treatments of the wastes they produce.

If wastes are not treated where they are produced, they must be adequately packaged for transportation to another site where treatment or final disposal can take place. Packaging is a key matter in successful treatment of hazardous waste. A package must be impervious to the material placed in it, must be adequately sealed to prevent loss of material, must resist penetration by the physical character of the material (i.e., must be sufficiently strong and puncture-resistant), and must not react with the waste enclosed. The package must also be large enough for the convenience of the user but small enough to be handled. Finally, the color of the package, labels, or insignia applied must give both the waste producer and the waste handler information as to how the material will be handled.

The final phase in the collection and disposal of hazardous wastes is transportation to the disposal site. Wastes must be properly packaged so that manual handling, vehicle motion, or other such factors do not allow release of materials en route to the disposal site. Other presentations in this workshop have already dealt with the permits required for waste generators, waste transporters, and disposal site operators.

WASTE DISPOSAL AT THE MEDICAL CENTER

The University of Illinois Medical Center in Chicago has developed a hazardous waste disposal standard. The handling of hazardous wastes is of primary concern because such wastes can affect the health and safety of all university faculty, staff, other employees, and students at the Medical Center. Persons working in areas where these materials are generated must not expose

others, especially housekeeping, maintenance, and service workers, to danger. Thus, users must cooperate with safety personnel to ensure the proper packaging, transportation, and disposal of hazardous wastes.

The central feature of the hazardous waste disposal program is color coding. Blue bags, which contain tissues, organs, carcasses, and other wastes (both infectious and noninfectious), go to a pathological incinerator. Orange bags, which contain specimens, cultures, and other infectious wastes, go to an autoclave. All other bags, which contain ordinary rubbish and nonhazardous solid waste, go to a compactor. The choice of color for the ordinary rubbish bag depends primarily on cost. The most economical bags may happen to be black, brown, some other color, or colorless. Blue or orange bags, however, are never used for ordinary rubbish.

Chemical wastes are handled separately, and at no time should large quantities of chemical wastes be allowed to accumulate. Chemical wastes must simply be identified, labeled, and packaged in boxes that are accompanied by lists of contents. Producers of chemical wastes are cautioned not to place incompatible chemicals in the same box. Boxes are transported to a central point, where the chemical waste disposal vendor removes them from the campus.

Disposable needles and syringes require special handling. Our studies have shown that persons handling rubbish have received nearly as many puncture wounds as the persons using needles and syringes in their work. We believe that no waste handler should be stuck by an object protruding from waste container and instruct users to dispose of needles and syringes in a special cardboard carton upon which a clipping device is mounted. This device permits the user to clip both the needle and the syringe at the hub and drop the parts into the carton. To make proper disposal convenient, we allow unlimited numbers of cartons to be kept at locations where needles are used. Other disposal methods (e.g., systems that crush needles, melt the syringe and needle into a block, or return the needle to a protective sheath) pose impediments to the user and have resulted in improper handling and disposal.

Aerosol cans also deserve special handling and must be kept separate from ordinary rubbish. The only requirement for safe and sensible disposal is to mark a container that contains aerosol cans.

Like needles, sharps can penetrate packages and puncture the waste handler. Broken glass and sharp instruments can find their way into ordinary waste and can lacerate and infect the handler. Again, the primary need is to segregate such materials, place them in containers that resist penetration, and label the containers as holding broken glass or sharps.

Radioactive wastes are disposed of in other prescribed ways, which are specified by our Radiation Safety Manual. This paper will not discuss methods of radioactive waste disposal.

Autoclaves must be tested monthly and weekly in patient-care areas to determine whether or not they are working properly. The Housekeeping Department assigns more than one trained person to do autoclaving. Thus, if one person is absent, the process is not interrupted. All

incinerator, autoclave, and compactor personnel are required to wear gloves, face masks, and safety glasses. Carts in which hazardous waste containers are transported must be steam cleaned at least once a week whenever contaminated with infectious waste.

We double-bag blue- and orange-coded wastes. A clear plastic bag (or bag of any other color except blue or orange) is placed inside a blue or orange bag to give extra protection. When the waste is ready to be discarded, the inside bag is tied first; then the blue or orange bag is tied.

The Medical Center's waste disposal standard specifies the following procedure for handling wastes:

> Blue-coded wastes. Blue-coded wastes, which are disposed of in the pathological incinerator, include infectious human organs, infectious animal carcasses and organs, noninfectious human organs and tissues from autopsy and operating rooms, and noninfectious animal carcasses, organs, tissues, and wastes. All these materials are combustible. Each blue bag must be 2 mills thick, must be sealed with a tie, and must be transported directly to the pathological incinerator for handling by a crew trained in the use of that incinerator.
>
> Orange-coded wastes. These wastes are understood by the producer and by the handler to require autoclaving before disposal. They include infectious human tissues, materials from autopsy and operating rooms, infectious animal tissues and wastes, clinical laboratory specimens, microbiological cultures, disposable waste from patients in isolation areas, and other infectious waste materials that may or may not be combustible. Orange-coded wastes are first collected in covered containers that are lined with heavy-duty autoclavable disposable orange bags bearing biohazard signs and labels. Ideally, the wastes are autoclaved at the places where they are produced. In an area without an autoclave, personnel must transport such wastes to an available autoclave. Bags must be opened and water must be added to the contents before autoclaving to ensure proper decontamination. Autoclave tapes are used on orange bags to show that they have been autoclaved. After autoclaving, orange-coded waste may be collected by housekeeping personnel and disposed of in the rubbish compactor.

Disposable and unwanted chemicals and chemical wastes. Flammable and combustible liquids that are miscible with water in all proportions may be flushed down the drain if such liquids do not exceed one pint and are thoroughly mixed with at least 3 gallons of water. Other nonhazardous wastes may be disposed of in regular waste containers. If chemicals cannot be safely discharged in one of these manners, the following procedure is required:

1. Properly seal and clearly label every bottle or container.

2. Sort chemicals according to the kinds of hazards they pose.

3. Individually wrap each bottle with packing material and

put the bottles into a cardboard box. Clearly mark each box according to the kinds of hazards posed by its contents.

4. Fill out the request form for disposal of unwanted chemicals.

5. Contact the Building Inspector, who picks up the chemicals and transports them to a storage area for removal.

Used needles and syringes. The following disposal procedure is prescribed for used needles and syringes:

1. Mount Destruclip® on top of disposal carton.

2. Destroy used needles and syringe with the Destruclip®. Clip the needle from the hub and the tip from the syringe.

3. Deposit remaining syringe parts into disposal carton.

4. Fill the carton, autoclave it, seal it with tape, and put it inside a clear plastic bag.

Housekeeping personnel pick up and dump the bag into the compactor with ordinary rubbish. In areas where an autoclave is not available, cartons may be sealed with tape and put inside orange biohazard bags. Each department is then responsible for transporting such filled cartons to the autoclave area.

Miscellaneous wastes. The standard prescribes the manners in which aerosol cans, broken glass, and sharp instruments are to be packaged for disposal. The standard includes a simple request form for identifying chemicals to be disposed of and provides a waste disposal flow chart showing how various wastes are packaged, color coded, and disposed of. At present, the standard represents a starting point for the proper diposal of various hazardous wastes. With experience, we expect to make improvements, including modifications in the waste-generating departments and in the means of transportation and disposal.

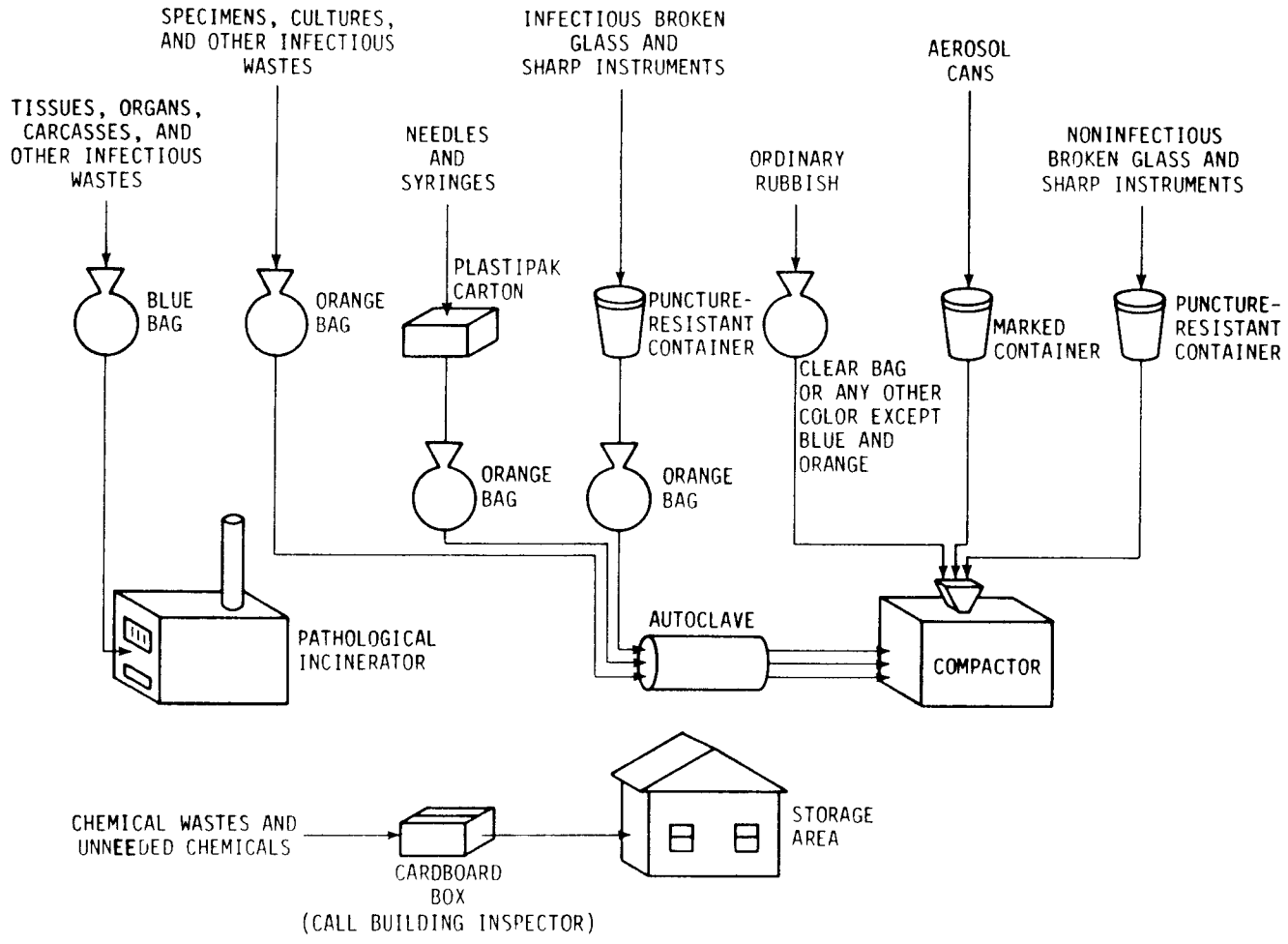

Waste disposal flow chart.

CASE STUDY OF HOSPITAL WASTE MANAGEMENT, UNIVERSITY OF MINNESOTA

Robert A. Silvagni

The purpose of the presentation is to present past and present waste management programs serving the Health Science - Hospital Complex of the University of Minnesota. The presentation is geared to illustrate the various external influences that affect the collection, storage, and disposal of hospital and health research wastes.

BACKGROUND

The main campuses of the University of Minnesota are located in Minneapolis and St. Paul and are within four miles of each other. Most of the University's hospital and health activities are on the Minneapolis campus. The St. Paul campus, known as the farm campus, is where the Veterinary Hospital and Veterinary School are located. For the purpose of this presentation, the reference to biohazardous infectious wastes generated at the St. Paul campus will be those generated at the Veterinary Hospital and/or the Veterinary School. The Minneapolis campus generates biohazardous infectious wastes in the Health Science Complex, which consists of the following units:

- Medical School
- Dental School
- Teaching Hospital (220 beds)
- Research Hospital
- Heart Hospital
- Cancer Hospital
- Biomedical Research Laboratories

ORGANIZATIONAL RESPONSIBILITIES FOR WASTE MANAGEMENT

The Physical Plant Department provides waste disposal service for the hospital, the Health Science Complex, and the balance of the university. The hospital is charged for waste disposal services because of its charter status; however, the Physical Plant provides waste disposal services to the rest of the university through its maintenance budget.

An independent entity known as University Hospitals reports to the president of the university; whereas the numerous biomedical laboratories may be affiliated with other operating departments.

Mr. Silvagni is an Environmental Engineer at the University of Minnesota. His experience includes 11 years of private and regulatory work in solid waste management. He holds a B.S.C.E. from Norwich University and an M.S.C.E. from West Virginia University.

The Department of Environmental Health and Safety is responsible for technical guidance, procedural guidelines, and review of university operations on matters pertaining to environmental health, sanitation, and safety.

This department establishes the operational framework under which Physical Plant waste disposal services are provided, i.e., definitions of biohazardous infectious wastes, hazardous waste, etc. (see Definitions of Hazardous Waste at the end of this report).

In response to the various regulations, guidelines, and internal procedures, an operational framework has been developed whereby the Physical Plant manages the various waste streams. Figure 1 outlines the management scheme for these wastes. Because of specialized management and disposal requirements, seven major waste streams have emerged:

1. Normal solid waste. Classroom, office, generally all wastes not classified or further defined below. Approximately 20 tons/day.

2. Biohazardous infectious waste. As defined by the Department of Environmental Health and Safety. Packaged in red plastic bags. About 3000 lb/day.

3. Chemical hazardous waste. State Pollution Control Agency Definition. 10 to 55 gallon drums/month.

4. Low-level radioactive waste.

5. Research animals. About 1000 lb/day.

6. Animal waste, bedding. Approximately 1 ton/day.

7. Anatomical waste.

The biohazardous infectious waste stream has been the most troublesome and costly. As late as 1978, the university utilized a traveling grate mass burning incinerator to dispose of research animals, refuse (normal solid waste), biohazardous infectious wastes, and animal bedding wastes. This incinerator was readily available and convenient to use, and operational costs were met out of a utility budget; therefore, internal procedures liberally defined these wastes as biohazardous infectious wastes. As a result, red bags (signifying biohazardous infectious waste) were used in a generous manner, and not much attention was paid to their proper use.

The State and the Federal Environmental Protection Agencies eventually required the university to phase out the incinerator because of poor emissions control. In response, the university diverted its normal waste to area landfills and contracted with a small private incinerator to burn its biohazardous infectious wastes. The switch to the commercial incinerator necessitated a 30-mile round trip three times a day plus payment of $0.10 per pound of waste. These changes increased the university's waste disposal costs by 10 times in one fiscal year. These costs are broken down as follows:

1. Special trucks and carts to haul the infectious waste the 30-mile round trip at a cost of $0.10 per pound. Estimated annual cost, $176,015.

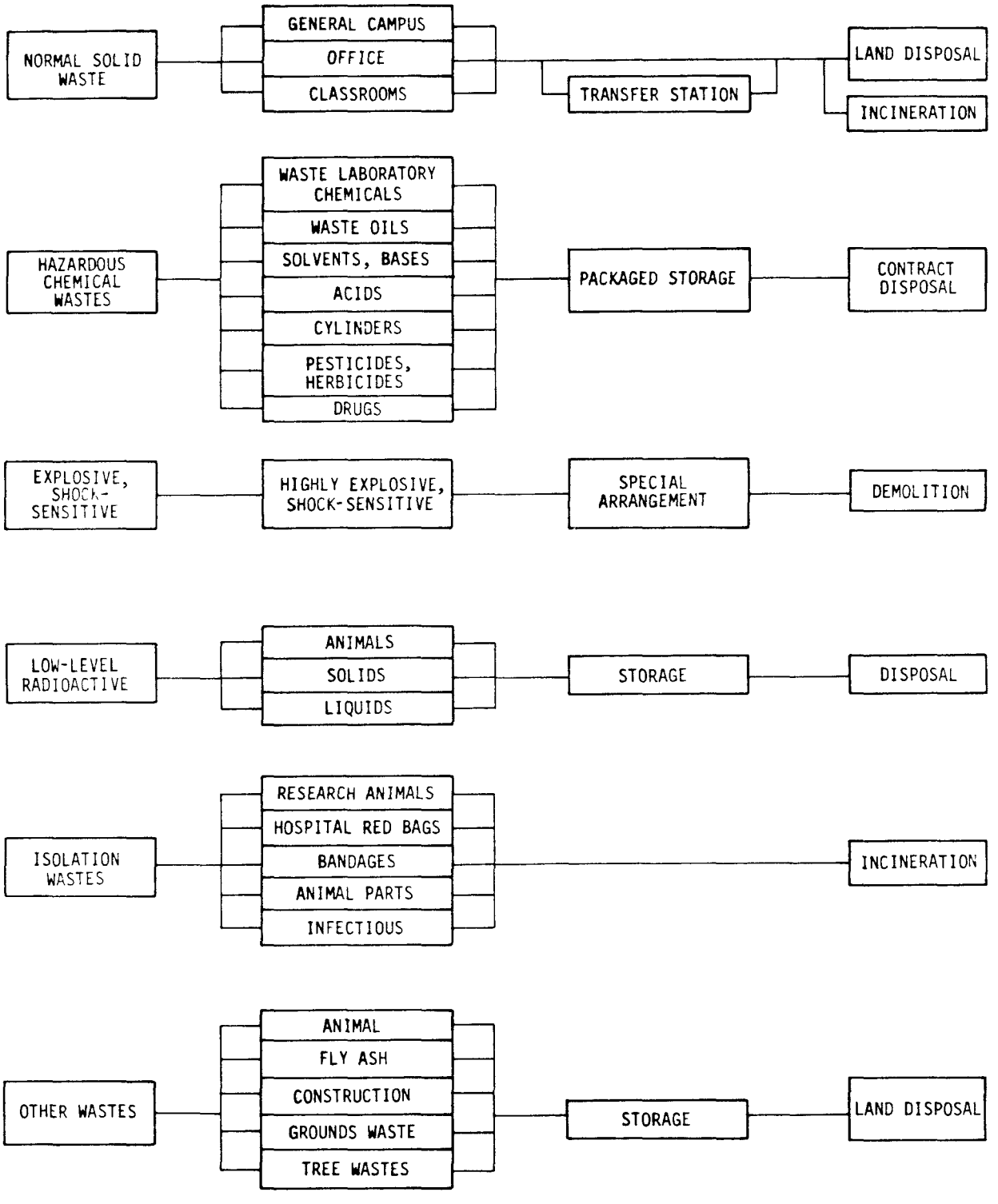

Figure 1. Solid waste categories.

2. Haulage of waste to a landfill 10 miles away at a cost of $20-$40 per truckload. Estimated annual cost of $48,000.

To further add to the problem, the university has also spent more than $100,000 to upgrade its incinerator, and additional funds are required before the incinerator can meet minimum air quality emission criteria. The university must continue to upgrade the incinerator because the commercial incinerator that burns their biohazardous infectious wastes continues to break down. If the commercial incinerator were to shut down, the university would be in the difficult situation of not being able to dispose of its biohazardous infectious wastes. Furthermore, since the commercial incinerator is the only one available, it cannot always handle the volume of wastes to be incinerated; therefore, the university must store its wastes until they can be accepted by the incinerator.

SOURCE REDUCTION

In an effort to reduce the amount of biohazardous infectious waste, the University Hospital and the Department of Physical Plant cofunded a source reduction study. In brief, the project reviewed the following elements:

Study of one-time-use products.

Project to educate employees to use red bags properly.

Development of different options to reduce biohazardous infectious wastes through operational changes.

The importance of this study is that it revealed that changes made in the definitions and procedures for waste management required review and input from various hospital health science experts. For example:

The operating room staff can control and segregate wastes between the biohazardous infectious waste stream and the infectious waste stream without difficulty.

The microbiology laboratory staff are well aware and knowledgeable about their wastes so that they could autoclave all of it without difficulty if proper operating procedures could be developed.

The staff of each operating station within the hospital were interviewed regarding the generation of biohazardous infectious waste in their station and were asked to recommend changes that would reduce infections. The interview team was comprised of the biohazardous officer, the infection control officer, and the custodial services representative.

This study resulted in source separation changes that precipitated a 45 percent reduction in the volume of biohazardous wastes and a projected $100,000 per year cost saving:

1. One part in this project concerned throwaway/single use products. This effort was made to determine those products that could be replaced by reusable products and to develop a method for assessing the disposal cost so it could be added to the purchase price of the product. The results showed disposal costs clearly do not support product replacement at this time.

2. The project staff also investigated the purchase of a new infectious waste incinerator. This investigation revealed that the State Pollution Control Agency was issuing incinerator operating permits based on the manufacturer's submitted test data and not an actual field emission test data. Furthermore, technical problems associated with units now operating made it impossible to test these units. Therefore, no further consideration was given to purchasing our own unit until more performance data could be obtained and incinerator toxic emissions could be assessed more extensively.

3. The most important finding of the work conducted during this project concerned the role of employee-staff education--we simply had not done a good job of telling our staff how to dispose of their wastes properly. To correct this problem, we had a health education specialist develop a program that included the following:

   a. An audio-visual program (slide-tape) for presentation to all employees (old and new) that reviews the waste management problem and their individual responsibilities.

   b. Development of a waste management brochure.

   c. A series of staff meetings at all levels, including management, to increase awareness of waste disposal and outline responsibilities.

In closing, a comprehensive review was made of waste management at the University of Minnesota Hospitals. This study revealed that certain changes could be made to assist in source separation of wastes. By making these changes, we were able to realize a 45 percent reduction in the infectious wastes stream.

REGULATIONS PERTINENT TO THE GENERATION, STORAGE, HANDLING, AND DISPOSAL OF WASTE AT THE UNIVERSITY OF MINNESOTA

FEDERAL

Department of Transportation

Sets requirements for separation, containerization, labelling, and shipping of hazardous materials.

Nuclear Regulatory Commission

Regulates all use of radioactive material, including handling, packaging, shipping, and final disposal of wastes.

Environmental Protection Agency

Proposes regulations covering identification, generation, storage, transportation, treatment, and final disposal of hazardous wastes (other than radioactive). Manifest system following movement of wastes is an integral part of these regulations.

Regulates disposal of pesticides and pesticide-contaminated materials.

Sets incinerator emission standards.

STATE

Minnesota Department of Health

Hospital regulations are being revised to include requirements for handling infectious waste. Will probably require incineration or sterilization.

Minnesota Department of Transportation

Regulations equivalent to DOT regulations; also cover intrastate shipping.

Minnesota Pollution Control Agency

Regulates solid waste disposal, including a general duty clause that states that no material shall be handled in a manner that damages the environment. A proposed revision defines the category of "special infectious waste" and excludes this material from sanitary landfills.

Sets limits for emissions from incinerators.

Proposes regulations for hazardous wastes that have similar effect as Federal proposed regulations, except that infectious waste control is left to the Department of Health.

OTHER

Joint Commission on Accreditation of Hospitals

Requires incineration or sterilization of pathogenic wastes.

Department of Environmental Health and Safety

Sets university policies regarding handling and disposal of biological, chemical, and radioactive wastes. These policies meet or exceed all applicable external regulations.

DEFINITIONS OF HAZARDOUS WASTE

The following broad definitions are included in the present Solid Waste Regulations (SW-1) of the Minnesota Pollution Control Agency (MPCA) and the proposed hazardous waste Guidelines and Regulations of the U.S. Environmental Protection Agency.[1]

1. MPCA - Toxic and Hazardous Wastes. Toxic and hazardous wastes are waste materials including but not limited to poisons, pesticides, herbicides, acids, caustics, pathological wastes, radioactive materials, flammable or explosive materials, and similar harmful chemicals and wastes which require special handling and must be disposed of in a manner to conserve the environment and protect the public health and safety.

2. EPA - A solid waste, or combination of solid wastes, which because of its quantity, concentration, or physical, chemical or infectious characteristic may:

   a) Cause or significantly contribute to an increase in mortality or an increase in serious irreversible or incapacitating reversible illness, or

   b) Pose a substantial present or potential hazard to human health or the environment when improperly treated, stored, transported, or disposed of, or otherwise managed.

[1] Federal Register, December 18, 1978.

Agency (MPCA) define infectious wastes more specifically. The MPCA[1] definition of special infectious wastes and the SHD[2] list of hazardous infectious wastes are identical as quoted below. One important distinction in the preface to the definition is that the MPCA definition applies to both animals and humans and the SHD definition applies only to humans.

Infectious Waste Definitions.

Infectious waste is defined as waste which originates from the diagnosis, care or treatment of a person that has been or may have been exposed to a contagious or infectious disease. Such waste includes, but may not be limited to, the following:

a) Hazardous Infectious Waste:

   1. All wastes originating from persons placed in isolation for control and treatment of an infectious disease.

[1] Proposed Amendments to SW-1 MPCA.
[2] SHD Regulations for Free Standing Outpatient Surgery Areas, p. 11.

2. Bandages, dressings, casts, catheters, tubing, and the like, which have been in contact with wounds, burns, or surgical incisions of a suspected, known or medically identified hazardous infectious nature.

3. Laboratory and pathology waste of an infectious nature which has not been autoclaved.

4. All anatomical waste, including human parts or tissues removed surgically or at autopsy.

5. Any other waste as defined by the State Board of Health which because of its potential infectious characteristics or hazardous nature requires handling and disposal in a manner prescribed for (1) through (4).

The SHD also defines a category of general infectious waste that can be disposed of directly into an MPCA approved sanitary landfill.

b) General Infectious Waste (Contaminated Waste):

1. Bandages, dressings, casts, catheters, tubing, and the like, which have been in contact with wounds, burns, or surgical incisions, but are not suspected or have not been medically identified as being of a hazardous infectious nature.

2. Discarded hypodermic needles and syringes, scalpel blades, and similar materials, except when suspected or identifed to be of a hazardous infectious nature.

3. Incinerator ashes from infectious waste.

Although it is possible to provide considerably more background information on the subject of hazardous waste definitions [e.g., difference between Department of Transportation (DOT) and EPA definitions, specific EPA tests for defining various hazardous properties, long lists of chemicals on EPA lists, etc.], it seems more appropriate that the committee agree on an operational definition. The following is suggested for committee review and revision.

A hazardous or special waste at the University of Minnesota is considered as solid material or containerized liquids that may require special handling and disposal because of potential adverse effects on humans, animals, or the environment. Effects may be physical, chemical, and/or infectious. At the university, hazardous wastes shall include the following general categories or combinations thereof:

Infectious--Contaminated with pathogenic micro-organisms.

Pathologic--Human or animal tissue, including blood.

Flammable and combustible liquids.

Corrosive waste--Base with pH >12; acid with pH <3; and solid acids or bases.

Explosive or reactive wastes--Normally unstable, undergoes violent change (such as reaction of sodium with water), or can be detonated.

Radioactive wastes--Isotopes or materials contaminated with radioisotopes.

Toxic chemicals--Can cause chronic or acute disease; include but are not limited to the following:

- Pesticides
- Carcinogens
- Heavy metal
- Chlorinated organics

HOSPITAL WASTE REDUCTION AT THE UNIVERSITY OF MINNESOTA HOSPITALS

J. Michael Sprafka

In May 1978, the University of Minnesota was placed in a serious dilemma regarding hospital waste when the Minnesota Pollution Control Agency cited and closed the university's onsite incinerator for air quality violations. As a result, the Department of Physical Plant Operations, which manages the university's waste materials, decided to initiate a waste-reduction project in the university's hospital complex. This project, conducted in cooperation with the hospital administration, was one of several pursued by Physical Plant Operations to alleviate the magnitude of the waste management problem.

The difficulties related to solid waste management have increased continually at the University of Minnesota as a result of economic factors and new environmental health regulations. In the past, all of the university's solid waste, including biohazardous-infectious materials, was disposed of in an onsite incinerator. The availability of this incinerator allowed the University of Minnesota Hospitals to develop internal waste management practices that liberally defined biohazardous-infectious and nonbiohazardous-infectious waste.

As time progressed, the Minnesota Pollution Control Agency restricted the use of the university's incinerator. Because of continual incinerator emission problems, the university phased out the incinerator as a disposal option and entered into a costly contract with a commercial facility for the incineration of biohazardous-infectious waste.

These increased costs prompted the Physical Plant to propose this study to reduce the amount of biohazardous-infectious waste generated within the hospital complex. The study combined the efforts of the Department of Physical Plant Operations and the Department of Environmental Health and Safety. The project was funded by three university departments: Hospital Administration, Central Administration, and Physical Plant Operations. The project staff developed an advisory panel consisting of administrative personnel who were capable of providing consultation during the course of the project.

Mr. Sprafka is a Research Fellow at the University of Minnesota. He is currently involved in a research project sponsored by the Departments of Epidemiology and Environmental Health to determine health risks associated with organic contaminants in the environment. He holds a B.A. and an M.S. from the University of Minnesota.

The study consisted of two major components:

1. An analysis of the external and internal solid waste management costs at the university hospitals.

2. The development of waste management policies and procedures to maximize source separation of biohazardous-infectious waste from nonbiohazardous waste.

A third component of this study consisted of an evaluation of all single-use disposable items to determine the feasibility of replacing these items with reusable items. The results indicated that a reduction in the use of disposable products would not significantly affect the cost associated with hospital solid waste disposal. A formula was developed, however, whereby the disposal cost per product can be factored into the purchase price to provide a more complete cost profile.

The model for the external hospital waste disposal cost is comprised of two components. The first component includes the cost associated with the transport of waste materials; the second includes the cost incurred for the use of the disposal site. The boundaries of the external cost model are defined by the administrative responsibilities of two university departments: Hospital Administration and Physical Plant Operations. The total external disposal cost includes the cost of vehicles, transport, labor, maintenance, and ultimate disposal.

Information regarding the quantity of hospital waste was obtained from records of daily waste weights maintained by these two departments. A combination of total cost and weight information provided a disposal cost per pound for both waste streams.

The results of this analysis indicate that the external disposal cost is approximately $0.18 per pound for biohazardous-infectious waste and less than $0.01 per pound for nonbiohazardous waste. For fiscal year 1980, the total weight of hospital solid waste is projected to be 6,200,088 pounds, and the total cost of external solid waste transport and disposal is projected to be $224,014. Biohazardous-infectious waste makes up only 15.3 percent of the total projected hospital solid waste weight; yet it accounts for 78.6 percent of the total cost outlay for external hospital solid waste transport and disposal.

A long-term operational cost covering labor, fringe benefits, and plastic bags is associated with the internal collection of solid waste within university hospitals and clinics. Not included in this analysis is the cost of nursing staff and housekeepers to transport the waste from patient rooms to the central storage area, administrative costs, and several operational costs such as cart maintenance and upkeep. All of the information for this analysis was provided by Physical Plant Operations and Environmental Services, which are the administration units directly responsible for internal solid waste management.

The second component of this study was an evaluation of the solid waste handling and disposal practices in the hospital with the aim of identifying problems in the system. During the course of the investigation, employees were carefully informed about the Hospital Waste Reduction Project and became involved to vary-

ing degrees in suggesting improvements in the system. Hospital personnel were regarded as a crucial resource, not only in describing current waste management practices, but also in identifying problems and devising feasible solutions.

The assessment of employee practices, knowledge, and concerns entailed several data-gathering methods, including observational and questionnaire surveys, individual and group interviews, and focus group discussions. Assessments were made of the knowledge and use of existing disposal options, practical requirements for waste handling in work areas, and concerns about waste management. The assessment process focused on hospital laboratories, nursing stations, outpatient clinics, and the Department of Environmental Services, but other units, such as X-ray, Surgery, and Central Sterile Processing, were also considered.

Several concerns and needs were identified as a result of the assessment. Major inconsistencies in the use of red plastic bags (the designated biohazardous waste container for the hospital) and in other aspects of the waste management system were found to be the primary problem interfering with the efficiency of the system. Inappropriate disposal practices could be related directly to the lack of clean, consistent policies and procedures for waste handling and disposal in the hospital.

A second but closely related finding was that the red plastic bags did not seem to signify to many employees that the contents were biohazardous. They may have recognized that red bags were supposed to contain biohazardous-infectious waste, but because large quantities of normal waste were being disposed of in the red bags, they did not necessarily exercise caution in their handling. Because professional and technical personnel were able to evaluate the hazard potential based upon the waste material itself rather than the color of its containment bags, it is believed they probably could also discriminate and separate biohazardous-infectious and normal waste prior to placing it into the appropriate disposal container. The casual attitude of employees toward some waste in red bags also suggested that they were no larger being alerted by the bag's red color. The impact of the color code could be strengthened by limiting the use of red bags to waste that poses a true biological hazard.

In many areas of the hospital, all waste was disposed of in the biohazardous-infectious waste stream. The biosafety officer and unit administrators evaluated the biological hazard potential of waste materials in the unit and devised safe, practical means of separating biohazardous-infectious waste from normal waste. This separation was based on the following definitions of biohazardous-infectious waste:

1. Waste that originates from the care or treatment of a patient who is ill as a result of a communicable infectious agent or who is suspected of being infected and capable of transmitting a communicable infectious agent.

2. Waste that originates from clinical or research laboratory procedures involving communicable infectious agents, unless such waste has been properly decontam-

inated by an approved process (e.g., autoclaving).

3. All needles and sharps regardless of whether such waste is contaminated with communicable infectious agents and/or has been decontaminated by an approved process.

4. Large quantities of tissue removed during surgical procedures regardless of the infectious nature of the patient.

5. Waste that the Hospital Infection Control Committee defines as biohazardous-infectious waste.

The project staff assisted on implementing improved waste separation practices in the following areas: operating rooms, hospital laboratories, X-ray department, and all hospital stations. In addition, Physical Plant operations provided clearance for all nonbiohazardous waste glass to be discarded into the "normal hospital waste" stream.

Thus far the implementation of these waste handling changes has effectively reduced the volume and weight of biohazardous-infectious waste by an estimated 45 percent and produced a savings of approximately $75,000 (computed over a 1-year time period).

The results of the waste reduction project indicate that nonbiohazardous-infectious wastes were entering the biohazardous waste stream as a result of unclear definitions of biohazardous waste, lack of specific procedures, and insufficient staff awareness regarding hospital solid waste.

The maintenance of an effective waste management program relies on source separation and a continuous staff training/awareness program. Continuing programs at the University of Minnesota include an autoclaving experimentation that specifies the time, temperature, container material, and container configuration required for complete decontamination of waste from hospital laboratories and provides an educational slide-tape presentation on waste management procedures for hospital personnel.

Future considerations for hospital solid waste programs should include recycling of solid waste materials, feasibility of mechanized internal waste transport systems, optimization of waste containers and liners, and feasibility of the use of onsite incineration units equipped with heat recovery for the ultimate disposal of all hospital solid waste.

REACTION PANEL NOTES: SESSION ON RESEARCH- AND HOSPITAL-GENERATED WASTE

Donald Vesley

The aim of the reaction panel is to synthesize constructive ideas based on the case studies presented. These ideas might help the U.S. Environmental Protection Agency (EPA) formulate appropriate regulations for disposal of hazardous waste from hospitals. Major points about such waste are discussed in these notes.

Disposal of hazardous waste is a long-standing problem that has been aggravated by recent events. Hospitals have discontinued onsite incineration because of current air pollution control regulations and hesitate to upgrade or replace incinerators because of uncertainty about future regulations. Meanwhile, escalating fuel costs and diminishing availability of landfill sites indicate that future dependence on that type of disposal may become prohibitively costly.

The definition of infectious waste is subject to disagreement. A narrower definition would reduce the need for special disposal and increase the percentage of waste that could be handled in normal channels.

The quantity of hazardous chemical and radioactive waste generated by hospitals is relatively small compared with the quantity of infectious waste. Nevertheless, onsite incineration of chemical and radioactive waste would greatly reduce handling costs.

Hospitals should conduct careful cost/benefit analysis before instituting expensive disposal methods. The record of hospitals has been excellent in avoiding the spread of infectious disease to the community via the solid waste stream.

A long-range solution to the problem of hazardous waste disposal should include the following features:

- Containerized collection and transportion by vacuum tubes to minimize handling costs and aerosol spread
- Direct feed to high-technology, onsite incinerators designed to minimize air pollution problems
- Heat-recovery systems to reduce both dependence on fossil fuels and total costs

Future EPA regulations should be consistent with this solution and encourage hospitals and universities to adopt the features listed.

Dr. Vesley is Professor of Environmental Health and Director of the Department of Environmental Health and Safety at the University of Minnesota.

REACTION PANEL NOTES: SESSION ON RESEARCH- AND HOSPITAL-GENERATED WASTE

Max J. Rosenbaum

If regulations proposed by the U.S. Environmental Protection Agency (EPA) are applicable to the average-size hospital facility, management administrative burdens and costs will greatly increase. Because no specific guidelines have yet been issued on disposal of hazardous waste from hospitals, perhaps the EPA can still be convinced to devise rational criteria for determining what waste constitutes a real hazard and how to dispose of it safely and most economically.

I suggest that a biohazardous classification system similar to that used by the National Center for Disease Control to rate the hazard potential of infectious organisms on a scale of 1 to 4 might be appropriate for EPA guidelines. In such a system wastes contaminated by more dangerous pathogens would require consideration for EPA manifest control, whereas wastes posing less hazard could be handled in a less restrictive manner.

I further suggest that, before promulgating regulations on disposal of hospital waste, the EPA should sponsor a study committee comprised of experts and public individuals to assess the risks involved and to focus on problems requiring special attention.

The need for reasonable guarantees of public safety in waste disposal is clear. Regulatory overkill, however, is not needed. We must be aware not only of the inflationary effect of unnecessary expenditure, but also of the energy required. Further, the use of elaborate and extensive incineration disposal methods will undoubtedly contribute to the increase in atmospheric carbon dioxide and the "greenhouse effect." We must always be mindful of our delicate ecosystem and the interdependency of its components.

I urge, most emphatically, that all aspects of the problem be considered before promulgation of the impending regulations. If regulations are still necessary, they should be as rational, feasible, and economical as possible.

Dr. Rosenbaum is Biological Safety Officer at the University of Wisconsin.

REACTION PANEL NOTES: SESSION ON RESEARCH- AND HOSPITAL-GENERATED WASTE

Edwin H. Hoeltke

On May 19, 1980, the Environmental Protection Agency (EPA) issued Regulations for Hazardous Waste Disposal through the Federal Register. These regulations are a detailed followup of the Resource Conservation and Recovery Act (RCRA) enacted by Congress in 1976. This Act has had a great impact on all industrial operations in our country, including those associated with health care and institutional activities.

In the 20 years I have been involved in the management of hospital operations, I have seen many changes and resolved many problems, none of which compares with the problems created by the Clean Air Act of 1970, the Resource Conservation and Recovery Act of 1976, and the EPA Hazardous Waste Disposal Regulations. These problems are such that one apparent solution creates another problem.

For the past 8 years I have been chairman of the Environmental Committee of the American Society for Hospital Engineering. During this time we have wrestled with the problems created by the Clean Air Act, environmental issues involving ethylene oxide and nitrous oxide, and the current hazardous waste disposal regulations. Each phase of our committee activities over this period of time has been related to the environment. As a result of this activity, we have made many contacts and attempted to assist health care institutions by working jointly with the manufacturers of the single-use items that contribute to the large volume of disposable materials leaving health care facilities and with the regulatory representatives of the U.S. Government agencies. In addition, we have drawn on the expertise of other professional societies and attempted to work together to resolve these problems.

Recently, I had the privilege of presenting a paper to the International Federation of Hospital Engineers in Washington, D.C., in cooperation with a representative of the Washington Office of the EPA. As a result of that opportunity, I believe that for the first time there was positive feedback between our society and EPA. This is not to say that we have not had cooperation in the past, but since we are dealing with problems that are not totally definable, it is obvious that joint opportunities for discussion are required and hopefully desired. To indicate

Mr. Hoeltke is Assistant Administrator at Christ Hospital in Cincinnati, Ohio. He is also the Chairman of the American Society for Hospital Engineering Environment Committee (an affiliate society of the American Hospital Association).

the extent of the uncertainties of the problem, let me quote a paragraph from Section 261.5 of the May 19, 1980, Federal Register regarding the Hazardous Waste Rules and Regulations:

> In enacting the Resource Conservation and Recovery Act, Congress was responding to a problem of unknown magnitude and dimension with specific reference to the generation of hazardous waste. The House Committee stated, "One of the major problems to be addressed in the hazardous waste area is the lack of information concerning the components, volume, and sources of hazardous waste. To date there has been no survey or other wide ranging investigation of the sources of hazardous or potentially hazardous waste generation or disposal. As a result, little is known about the actual volume of hazardous waste being generated, the geographical distribution of the generators, or the extent to which hazardous wastes are transported."

This passage indicates the uncertainty of the definitions of all of the materials possibly considered as hazardous waste items under the proposed regulations.

Hospitals and other institutions are uncertain if they have to register as hazardous waste generators because they do not know the volume of chemicals they use and which ones are among those listed as hazardous in the Federal Register of May 19, 1980. As stated in the Federal Register, the Regulation is primarily directed toward large users of chemicals. No definitions have been established relative to infectious wastes, which most certainly will have the greatest impact on health care institutions. It is possible, however, that many large university-affiliated hospitals with large research operations may be required to register. Unlike many other industries, hospitals and research facilities are multidisciplined operations; therefore, they are involved in many areas of potential concern to EPA and other regulatory groups within the state governments.

As stated in the regulation, it is up to the individual health care facility to determine whether or not it meets the qualifications that require registration as a hazardous waste generator. This regulation primarily concerns the use of chemicals in quantities that exceed 1000 kilograms per month. It is therefore necessary for each facility to gather data concerning chemical usage and to document their findings. If a facility does not generate 1000 kilograms per month, it will not be required to register. If a facility does generate more than 1000 kilograms per month, however, it must register before August 18, 1980.

I suggest that necessary data be gathered from all of the areas of an organization utilizing any of the chemicals listed in the Federal Register that are not disposed of through the sewage system. It should be noted that the exclusion portion of the regulation exempts any waste discharged through the municipal sewer systems.

This investigation should be utilized as a basis for determining compliance, and the data gathered should be kept on file for at least 3 years as documentation of the decision regarding registration. If at a later date a facility is questioned about not

filing, these data must be produced to avoid severe penalties. In gathering these data, it should be noted that the EPA intends to reduce the regulatory level to 100 kilograms per month within the next 2 to 5 years. Therefore, it will be necessary to retain any information gathered relative to determining whether or not a facility is a generator of hazardous waste.

The EPA is currently determining appropriate definitions of infectious waste. In this area, active input and cooperation must take place between the various professional societies such as American Association of Physical Plant Administrators, American Society for Hospital Engineering, and other related groups. I encourage total cooperation in determining and gathering data relative to the types of waste found in the various areas of health care operation. Considerable work has already been done that could be utilized as backup data to begin the process of cooperative exploration. I also suggest that activities be coordinated to include a method of keeping facilities apprised of any changes produced by state and Federal regulations. Facilities in many states are also under the jurisdiction of state EPA regulations that must be adhered to. State regulations have yet to define infectious waste because they intend to utilize the definitions that will be established by the U.S. EPA later this year.

All institutions should consider utilization of onsite incineration as a source for removing and disposing of hazardous waste. This will require the fewest number of people and permit consideration of the primary original intent of RCRA--conserving resources while resolving other environmental problems. The best way to recover the high Btu content from the waste materials disposed of in health care institutions is to incinerate them on site and to apply heat recovery systems to the facility operation. As an example, in a typical 700-bed hospital, the waste heat from incineration would be ample to heat all of the hot water for the laundry and the entire domestic hot water system for the facility in any given day. These general solutions require further study, and I look forward to the opportunity of working together with other professional societies and the concerned regulatory agencies in this effort.

REACTION PANEL NOTES: SESSION ON RESEARCH- AND HOSPITAL-GENERATED WASTE

Harvey W. Rogers

This paper consists of two parts. The first summarizes key points from the presentations by Ray Stephens, Robert Silvagni, and Michael Sprafka; the second comments on how the Resource Conservation and Recovery Act (RCRA) affects facilities devoted to biomedical research and health care. Also discussed in the second part is an incineration project developed by the National Institutes of Health (NIH) for disposal of waste chemicals.

KEY POINTS FROM PRESENTATIONS

Mr. Stevens reviewed hazardous waste handling procedures at the University of Illinois. His basic strategy for defining, classifying, and handling hazardous wastes is similar to the approach used by NIH. This workable approach stresses that the waste generator knows the waste best and consequently is the appropriate individual to determine which handling and disposal option available to the university should be used for a particular waste stream. One major difference in the handling strategies of the University of Illinois and NIH involves the disposal of waste tissue (human and animal). The university autoclaves this material and then incorporates it in the general waste, whereas the NIH incinerates all such waste material. Even though proper autoclave procedure can effectively eliminate any threat of infection from such material, the NIH prefers incineration because this option not only mitigates potential adverse health effects, but also destroys a waste that might be unaesthetic at a sanitary landfill. The NIH is fortunate in having sufficient incinerator capacity to treat waste tissue in this fashion.

Mr. Silvagni discussed hazardous waste management and source reduction strategies developed at the University of Minnesota. In a slide depicting the waste mix generated at the university, Mr. Silvagni captured the complexity of defining the waste mix and developing handling strategies for the various waste categories. Hospitals, universities, and biomedical research facilities can all expect to generate an equally complex mix of hazardous wastes. As Mr. Silvagni demonstrated, the first step in any management system for such a waste mix must be a thorough characterization of sources, categories, and properties of the waste generated.

Mr. Rogers is Chief of the Environmental Systems Section, Division of Safety, National Institutes of Health.

Mr. Sprafka described a system by which the waste mix at the University of Minnesota was analyzed for potential source reduction application. Complete system costs, as well as existing procurement and utilization policies, were reviewed. He showed that a modification in some of these policies resulted in very significant cost reductions, particularly when arbitrary definitions had caused nonhazardous waste to be incorporated in the expensive hazardous waste stream. This study pointed out the need to define waste categories carefully in developing or revising handling strategies and the need to review procurement policy carefully for ultimate system costs (e.g., reusables vs. disposables).

Often the individuals who decide on safety policy or manage the physical plant have better data to make such evaluations than do the procurement or administrative personnel of large facilities.

IMPACT OF RCRA

The impact of RCRA on large facilities such as NIH is significant. A major concern is the tracking of hazardous chemicals generated by such a facility. Unlike industry, biomedical research facilities generate a widely varying mix of chemicals that changes with time. Even though the quantity of any given chemical is often small (e.g., gram or milligram quantities) each substance must be tracked; this requirement poses a significant task for the facility management.

Also, NIH is interested in the definition of infectious waste to be issued in the fall of 1980 by the U.S. Environmental Protection Agency (EPA). It is hoped that the definition does not incorporate noninfectious waste in broad source categories. For example, if all animal waste from biomedical research facilities is defined as infectious, disposal costs would escalate significantly. Much animal waste is from clean animals (animals not chemically or biologically challenged) and is no more harmful than cage litter from the home gerbil cage. At NIH alone, almost 8 tons of "clean" animal bedding is disposed of with general waste each day without detrimental effects. A sweeping definition, such as the example mentioned, would unnecessarily force all animal bedding to be handled as hazardous waste. Because the NIH incinerators are not sized for such a load, the waste would have to follow the route of hazardous waste chemicals. Such disposal not only would be expensive, but also would use up valuable prime landfill space that should be reserved for truly hazardous wastes.

Each day, the NIH generates 200 to 300 pounds of chemical wastes ranging from waste oils and solvents to widely varying laboratory reagents. Generation of 1500 compounds in a month is not unusual. These compounds range from relatively nonhazardous sugars and media constituents to more hazardous flammable, toxic, or reactive compounds such as ether, toluene, or mercury compounds. Although the waste mix varies from month to month, the organic fraction (e.g., oils, solvents, organic chemicals) is somewhat predictable and accounts for most of the waste.

The NIH has explored incineration of organic waste chemicals. Five commercially available units and the NIH medical/pathological waste incinerator were tested for the ability to destroy waste chemicals. A representative, but relatively innocuous

mix of chemicals was fed to each incinerator in two trial burns. The chemicals were packaged in glass and plastic containers resembling reagent containers, and emissions were sampled for particulates, nitrogen oxides, sulfur oxides, chlorides, unburned hydrocarbons, carbon monoxide, carbon dioxide, and two tracer chemicals.

Several of the units performed well and easily met the particulate standard for incineration. Results were encouraging enough that NIH considered procuring a unit for more rigorous testing at its main campus to establish clear operating limits and develop confidence in its destruction capabilities.

The NIH has not pursued this project further, largely because RCRA requirements for measuring incinerator performance are unknown. The proposed standards issued in December 1978 contained performance criteria that would make emission analysis difficult, if not impossible (particularly for destruction efficiency). Also, the combustion efficiency equation did not correlate well with NIH observations of incinerator effectiveness. Consequently, NIH is delaying the commitment of further funds to this project until EPA issues final performance criteria.

The session was closed and followed by questions from the audience.

Printed for EPA by the Association of Physical Plant Administrators (APPA) of Universities and Colleges, a cosponsor of this seminar. Additional copies of this book are available from APPA, Eleven Dupont Circle, Suite 250, Washington, DC 20036, at $7.50 per copy.

APPA Publications Order Form

I would like to order the following APPA publications:

_____ copies of _____ @ _____ _____

All orders must be accompanied by either cash or a purchase order. One dollar billing charge if order is not prepaid. If amount is over $26.00, no billing charge is added.

_____
Name

_____
Title

_____
Institution

_____
Address

_____
City State Zip

Send orders to: Association of Physical Plant Administrators
of Universities and Colleges
Eleven Dupont Circle, Suite 250
Washington, D.C. 20036

APPA Publications

1978-79 Comparative Costs and Staffing Report for Physical Plants of Colleges and Universities is a compilation of data on unit costs, wages, and salaries broken down by geographic region, enrollment, and academic program. *$25*

Formula Budgeting: An Approach to Facilities Funding, by David L. McClintock, reviews formula budgeting practices used at various times by six states to allocate funds for support of state colleges and universities. *$6*

Campus Planning and Construction details a multiphase concept in planning, constructing, and renovating facilities. This concept examines each project from its initial design, through construction, to maintenance consideration after the structure is completed. The author offers numerous alternatives to each suggestion he makes, depending upon possible variables at different institutions. *$15*

Mortgaging the Future: The Cost of Deferring Maintenance examines the causes of the deferred maintenance problem. The author, Dr. Harvey H. Kaiser of Syracuse University, covers the financial aspects and organizational structure of deferred maintenance as well as suggesting methods of evaluating and addressing the problem. *$6*

Comprehensive Maintenance and Repair Program: Guidelines and Standards for the Maintenance and Repair of State Owned Facilities provides standards that can be modified and adapted to fit your institution's needs. It includes information on budgets, policies and procedures, staffing patterns, and custodial management. *$7.50*

Proceedings of APPA's 67th Annual Meeting (1980), Toronto, Canada. "The Eighties—Time for Conservation" was the theme for the program. Publication includes papers on topics such as energy management, cost control, resource conservation, and alterations and renovations. *$10*

Proceedings of APPA's 66th Annual Meeting (1979), Seattle, Washington. "Knowledge for the 80s" was the theme for the program. Publication includes papers on topics such as campus security, preventive maintenance, energy savings, and computerized telephone control systems. *$7.50*

A Basic Manual for Physical Plant Administration, by George O. Weber, is an instructional and operational manual for facilities administration. *$15.50*

Remodeling, Renovation and Conversion of Educational Facilities is a compilation of papers by noted physical plant administrators on the when and how of facility renovation, restoration, and conversion. *$7.50*

Housekeeping Procedure Manual, prepared by the Department of Building Services at Purdue University, contains a complete housekeeping program for building custodians. Includes instructions for operating automatic floor scrubbers, floor machines, and many other helpful maintenance suggestions. *$5*

APPA Newsletter, a fast-paced monthly communication of newsworthy people, places, and events emphasizing what's happening now in physical plant departments, federal agencies, and in higher education association circles. Includes news of APPA projects and activities, physical plant news, Energy Task Force project news, new members, and an Information Exchange column. *The subscription price is included in APPA dues; others may subscribe for $30 a year.*

Accessibility Publications

Modifying the Existing Campus Building for Accessibility: Construction Guidelines and Specifications will include detailed design drawings for accessibility modifications to existing buildings for use by architects and contractors. Available from the Superintendent of Documents, U.S. Government Printing Office, North Capitol and H Streets, NW, Washington, DC 20402. Scheduled publishing date is June 1981.

Accessible Products Catalog will review currently available construction products designed for accessibility, using the latest standards and criteria. Listings will include manufacturers' name and product descriptions. .Available from G.P.O. Scheduled publishing date is June 1981.

Adapting Historic Campus Structures for Accessibility highlights solutions to problems involved in modifying older buildings for use by handicapped persons. *$4.25.* Order (Stock No. 065-000-00034-2) from G.P.O. (address above).

Creating an Accessible Campus is a comprehensive guide to accessibility for handicapped persons, including Section 504 regulations, general design recommendations, science laboratory design, instructional aids, and sources of funding. *$12.50*

Steps Toward Campus Accessibility features photo-essays on progress campuses have made in overcoming architectural, attitudinal, and communications barriers to handicapped persons. *$5.50*

Energy Task Force Publications

Energy Cost and Consumption Audit Report 1976-1979 contains energy consumption data resulting from a survey of 500 colleges and universities broken down by campus and type of facilities. It includes variables for size and type of facilities, fuel, and number of heating and cooling degree days. *$20*

Controlling Energy Through Microprocessor Utilization is based on the workbook used for an Energy Task Force seminar series. The publication provides information on establishing a microprocessor-based energy management system including goals and objectives, system design, types of control systems, sources and costs, purchasing procedures, and selling the program. *$15*

Cogeneration: A Campus Option? by Robert and Wendy Goble, describes the steps involved in implementing a campus cogeneration facility. Includes descriptions of campuses that are cogenerating as well as available technology and EPA regulations. A must for the campus considering cogeneration. *$12.50*

Energy Conservation Checklist for Universities and Colleges lists suggestions for conservation programs, primarily taken from existing programs of about 35 institutions. *$3*

Energy Management for Colleges and Universities is a 140-page manual based

on information developed for an Energy Task Force workshop series to help financial and physical plant personnel implement a well conceived energy management program. This is an essential tool for ensuring that colleges and universities continue to meet the instructional, research, and public service needs they have served. *$20*

Campus Energy Management Projects contains case studies of energy management projects implemented by colleges and universities involving the building envelope, electrical systems, HVAC systems, building operations, utilities production and operation. *$7.50*

Two Training Manuals Available in Spanish

Technical Publishing Company (TPC) publishes two training manuals in Spanish: "Basic Blueprint Reading," and "Reading Schematics and Symbols" ($29.50 each). Orders may be mailed to Publications Secretary, APPA, Eleven Dupont Circle, Suite 250, Washington, DC 20036.

APPA Publications Order Form

I would like to order the following APPA publications:

_____ copies of _____ @ _____ _____

_____ copies of _____ @ _____ _____

_____ copies of _____ @ _____ _____

All orders must be accompanied by either cash or a purchase order. One dollar billing charge if order is not prepaid. If amount is over $26.00, no billing charge is added.

Name

Title

Institution

Address

City State Zip

Send orders to: Association of Physical Plant Administrators
of Universities and Colleges
Eleven Dupont Circle, Suite 250
Washington, D.C. 20036