600283110

IRON AND STEEL PLANT OPEN SOURCE FUGITIVE EMISSION CONTROL EVALUATION

by

Thomas Cuscino, Jr., Gregory E. Muleski, and
Chatten Cowherd, Jr.
Midwest Research Institute
425 Volker Boulevard
Kansas City, Missouri 64110

Notice

This document is a prel[illegible] draft. It has not been formally r[illegible] by [illegible] should not at this stage be construed [illegible] represent Agency policy. It is bei[illegible] lated for comment on its technical accuracy and policy implications.

DRAFT

FINAL REPORT

EPA Contract No. 68-02-3177, Assignment No. 4
MRI Project No. 4862-L(4)

Date Prepared: August 31, 1982

(Revised by RCM 2/5/83)

U.S. Environmental Protection Agency
Region V, Library
230 South Dearborn Street
Chicago, Illinois 60604

Prepared for

Industrial Environmental Research Laboratory
U.S. Environmental Protection Agency
Research Triangle Park, North Carolina 27711

Attn: Robert McCrillis

Abstract

Open dust sources in the iron and steel industry were estimated to emit 88,800 tons/year suspended particulate in 1978 based on a 10 plant survey. Of this, 70, 13, and 12% were emitted by vehicular traffic on unpaved roads, vehicular traffic on paved roads, and storage pile wind erosion, respectively. Emission measurements, utilizing the exposure profile technique, indicate a 17% solution of a petroleum resin (Coherex^R) in water on an unpaved road reduced heavy-duty vehicle emissions by 95.7% for total particulate, 94.5% for particulate <15μm, and 94.1% for particulate <2.5μm (averaged over the first 48 hours after application). Plain water reduced emissions 95% for all particle sizes half an hour after application. Four hours later, efficiency of watering had dropped to 55% (total), 49.6% (<15μm), and 61.1% (<2.5μm). Coherex^R on an unpaved road travelled by light-duty vehicles reduced emissions by 99.5% (total), 98.6% (<15μm), and 97.4% (<2.5μm), 25 hours after application. Control efficiency decayed to 93.7% (total), 91.4% (<15μm), and 93.7% (<2.5μm), 51 hours after application.

On paved roads, vacuum sweeping reduced emissions 69.8% (total), 50.9% (<15μm), and 49.2% (<2.5μm), 2.8 hours after vacuuming. Forty minutes after water flushing, emissions were reduced by 54.1% (total), 48.8% (<15μm), and 68.1% (<2.5μm). Combined flushing and broom sweeping reduced emissions by 69.3% (total), 78.0% (<15μm), and 71.8% (<2.5μm), 40 minutes after application.

Control of emissions from coal storage piles varied from 90% to almost zero depending on the type of treatment, length of time since treatment was applied, and windspeed. Tests were performed using a portable wind tunnel.

Relationships were developed to determine relative cost effectiveness of open source emission controls.

U.S. Environmental Protection Agency

PREFACE

This report was prepared by Midwest Research Institute for the Environmental Protection Agency's Industrial Environmental Research Laboratory under EPA Contract No. 68-02-3177, Work Assignment No. 4. Mr. Robert McCrillis was the project officer. The report was prepared in Midwest Research Institute's Air Quality Assessment Section (Dr. Chatten Cowherd, Head). The authors of this report were Mr. Thomas Cuscino, Jr., task leader, Dr. Gregory E. Muleski, and Dr. Chatten Cowherd. Exposure profiling was conducted in the field under the direction of Dr. Mark Small and Mr. Russel Bohn with assistance from Mr. Frank Pendleton, Mr. David Griffin, Mr. Steve Cummins, Ms. Julia Poythress, Mr. Stan Christ and Mr. Pat Reider. Wind tunnel testing was directed by Mr. Russel Bohn and Dr. Gregory Muleski.

Approved for:

MIDWEST RESEARCH INSTITUTE

Andrew Funkhouser

for M. P. Schrag, Director
Environmental Systems Department

August 31, 1982

Notice

[illegible]

CONTENTS

Preface. iii

Summary and Conclusions xi
1.0 Introduction 1
1.1 Variables Affecting Control Efficiency. 3
1.2 Project Objectives. 6
1.3 Report Structure. 6
2.0 Selection of Sources, Sampling Methods, Sites and Control Techniques 7
2.1 Survey of Open Dust Sources and Controls. 7
2.2 Selection of Test Sites 13
2.3 Open Dust Sampling Methods 13
3.0 Source Testing by Exposure Profiling 19
3.1 Quality Assurance 19
3.2 Air Sampling Techniques and Equipment 22
3.3 Particulate Sample Handling and Analysis. 24
3.4 Aggregate Material Sampling and Analysis. 38
3.5 Results for Vehicular Traffic on Unpaved Roads. . . . 40
3.6 Results for Vehicular Traffic on Paved Roads. 57
3.7 Comparison of Predicted and Actual Uncontrolled Emissions 70
4.0 Wind Erosion Testing by Portable Wind Tunnel 81
4.1 Quality Assurance 81
4.2 Air Sampling Technique and Equipment. 81
4.3 Particulate Sample Handling and Analysis. 83
4.4 Aggregate Material Sampling and Analysis. 91
4.5 Results for Wind Erosion of Coal Piles. 92
5.0 Open Dust Control Design, Operation and Cost Parameters. 105
5.1 Design/Operation Parameters 105
5.2 Cost Parameters 105
5.3 Theoretical Cost-Effectiveness Analysis 105

7.0 References 127
8.0 Glossary 129
9.0 English to Metric Unit Conversion Table. 133

Appendices
A. Data Compilation from Materials Handling Flow Charts . A-1
B. Example Open Dust Source Control Survey Questionnaire. B-1
C. Miscellaneous Design/Operation and Cost Data C-1

FIGURES

Number		Page
1-1	Effect of vehicle speed, weight, and traffic density on control performance	5
3-1	Map of plant F showing test sites	20
3-2	Map of plant B showing test sites	21
3-3	MRI exposure profiler	23
3-4	Equipment deployment for Runs F-27 through F-35	25
3-5	Equipment deployment for Runs F-36 through F-45 and F-58 through F-74	26
3-6	Equipment deployment for Runs B-50 through B-60	27
3-7	Decay in control efficiency of watering on unpaved road under heavy-duty traffic	53
4-1	MRI portable wind tunnel	82
4-2	Equipment deployment for wind tunnel tests at plant F	84
4-3	Test site locations at plant H	85
4-4	Sampling pan detail	86
4-5	Decay in control efficiency of latex binder applied to coal storage piles	104
5-1	Graphical presentation of open dust control costs	113

TABLES

Number		Page
1-1	Open Dust Emission Factors Experimentally Determined by MRI	2
1-2	Summary of Potential Open Dust Source Control Techniques	3
2-1	Aggregate Materials Handled at Iron and Steel Plants in 1978	10
2-2	1978 Inventory of Open Dust Source Contributions to Suspended Particulate Emissions	12
2-3	Summary of Fugitive Emission Controls Used From 1978 to Present (by plant)	14
3-1	Quality Control Procedures for Sampling Media	28
3-2	Quality Control Procedures for Sampling Flow Rates	29
3-3	Quality Control Procedures for Sampling Equipment	30
3-4	Criteria for Suspending or Terminating an Exposure Profiling Test	31
3-5	Moisture Analysis Procedures	39
3-6	Silt Analysis Procedures	41
3-7	Exposure Profiling Test Site Parameters	42
3-8	Plume Sampling Data for Heavy-Duty Vehicles on Unpaved Roads	44
3-9	Particulate Concentration Measurements for Heavy-Duty Traffic on Unpaved Roads	46
3-10	Aerodynamic Particle Size Data - Heavy-Duty Traffic on Unpaved Roads	47
3-11	Isokinetic Correction Parameters for Heavy-Duty Traffic on Unpaved Roads	48

TABLES (Continued)

Number		Page
3-12	Vehicular Traffic Data and Emission Factors for Heavy-Duth Traffic on Unpaved Roads.	49
3-13	Normalized Emission Factors for Heavy-Duty Traffic on Unpaved Roads	51
3-14	Control Efficiencies for Heavy-Duty Traffic on Unpaved Roads.	52
3-15	Plume Sampling Data for Light-Duty Traffic on Unpaved Roads.	54
3-16	Particulate Concentration Measurements for Light-Duty Traffic on Unpaved Roads.	56
3-17	Aerodynamic Particle Size Data - Light-Duty Traffic on Unpaved Roads	58
3-18	Isokinetic Correction Parameters for Light-Duty Traffic on Unpaved Roads.	59
3-19	Vehicular Traffic Data and Emission Factors for Light-Duty Traffic on Unpaved Roads.	60
3-20	Normalized Emission Factors for Light-Duty Traffic on Unpaved Roads	61
3-21	Control Efficiencies of Coherex for Light-Duty Traffic on Unpaved Roads	62
3-22	Plume Sampling Data for Paved Roads.	65
3-23	Particulate Concentration Measurements for Paved Roads.	69
3-24	Aerodynamic Particle Size Data - Paved Roads	71
3-25	Isokinetic Correction Parameters for Paved Roads	72
3-26	Road Surface Characteristics and Emission Factors for Paved Roads.	73
3-27	Normalized Emission Factors for Vehicular Traffic on Paved Roads	74
3-28	Control Efficiencies for Paved Roads	75
3-29	Predicted Versus Actual Emissions (Unpaved Roads).	77

TABLES (Concluded)

Number		Page
3-30	Predicted Versus Actual Emissions (Paved Roads).	78
4-1	Quality Control Procedures for Sampling Flow Rates	87
4-2	Wind Erosion Test Site Parameters.	93
4-3	Wind Erosion Sampling Parameters	94
4-4	Threshold Velocities for Wind Erosion.	95
4-5	Aerodynamic Particle Size Data - Wind Erosion.	96
4-6	Properties of Surfaces Tested.	98
4-7	Wind Erosion Test Results.	99
4-8	Erosion Potentials for Coal.	101
4-9	Twenty-Minute Emission Rates for Cambria Coking Coal	102
4-10	Control Efficiencies for Wind Erosion of Coal Storage Piles.	103
5-1	Design/Operation Parameters - Paved Roads.	106
5-2	Design/Operation Parameters - Unpaved Roads.	106
5-3	Design/Operation Parameters - Unpaved Parking Lots and Exposed Areas.	107
5-4	Design/Operation Parameters--Storage Piles	108
5-5	Summary of Open Dust Control Cost Data	109
5-6	Open Dust Control Cost Comparison in Dollars Per Unit of Treated Source Extent.	110
5-7	Open Dust Control Cost Comparison in Dollars Per Unit of Actual Source Extent	111

Notice

This document is a preliminary draft. It has not been formally released by EPA and should not at this stage be construed to represent Agency policy. It is being circulated for comment on its technical accuracy and policy implications.

SUMMARY AND CONCLUSIONS

The purpose of this study was to measure the control efficiency of various techniques used to mitigate emissions from open dust sources in the iron and steel industry, such as vehicular traffic on unpaved and paved roads and wind erosion of storage piles and exposed areas. The control efficiency was determined not only for total particulate (TP), but also for inhalable particulate (IP)--particles less than 15 μm in aerodynamic diameter, and for fine particulate (FP)--particles less than 2.5 μm in aerodynamic diameter. In addition to control efficiency measurement, parameters defining control design, operation, and cost were quantified.

The methodology for achieving the above goals involved the measurement of uncontrolled and controlled emission factors for emissions from vehicular traffic on unpaved roads, vehicular traffic on paved roads, and storage pile wind erosion. These sources were selected based on an open dust source emission inventory for the iron and steel industry which showed the above three sources to contribute 70.4%, 12.7%, and 11.5%, respectively, of the 88,800 T/yr of suspended particulate emitted by the industry.

The exposure profiling method developed by MRI was the technique utilized to measure uncontrolled and controlled emission factors from vehicular traffic on paved and unpaved roads. Exposure profiling of roadway emissions involves direct isokinetic measurement of the total passage of open dust emissions approximately 5 m downwind of the edge of the road by means of simultaneous sampling at four to five points distributed vertically over the effective height of the dust plume. Size distributions were measured at the 1 and 3 m heights downwind utilizing cyclone precollectors followed by parallel slot cascade impactors. During selected tests, size selective inlets mounted on high volume samplers were also deployed downwind.

Nineteen tests of controlled and uncontrolled emissions from vehicular traffic on unpaved roads were performed. Ten tests were of heavy-duty traffic (greater than 30 tons) and 9 were of light-duty traffic (less than 3 tons).

In calculating the efficiency of a control technique from emission factor measurements collected during controlled and uncontrolled tests, the effect of testing during different periods in the lifetime of the control was taken into account. The decay of control efficiency with time after application has a number of causes, such as track-on from surrounding integrated surfaces and mechanical abrasion of the treated road surface. Accordingly, each value of control efficiency contained in this report includes the time after application that the measurement was taken.

Two control techniques utilized to reduce emissions from heavy-duty traffic on unpaved roads were tested: (1) a 17% solution of Coherex® in water applied at an intensity of 0.86 ℓ/m^2 (0.19 gal/yd^2), and (2) water

applied at an intensity of 0.59 ℓ/m^2 (0.13 gal/yd^2). The control efficiency for Coherex®, at the above application intensity, averaged over the first 48 hr after application, was 95.7% for TP, 94.5% for IP, and 94.1% for FP. The control efficiency for watering at the above application intensity, 4.4 hr after application, was 55.0% for TP, 49.6% for IP, and 61.1% for FP. The control efficiency of watering at the above application intensity was above 95% for all particle sizes 1/2 hr after application.

Only one control technique for emissions from light-duty vehicles travelling on unpaved roads was tested. The control measure was a 17% solution of Coherex® in water at an application intensity of 0.86 ℓ/m^2 (0.19 gal/yd^2). The control efficiency of Coherex® at the above application intensity, 25 hr after application, was 99.5% for TP, 98.6% for IP, and 97.4% for FP. This road had been closed to traffic for a day. Fifty-one hours after application, these efficiencies had decayed to 93.7% for TP, 91.4% for IP, and 93.7% for FP.

Three control techniques for mitigation of emissions from vehicles travelling on paved roads were tested: (1) vacuum sweeping, (2) water flushing, and (3) flushing with broom sweeping. The highest measured values for the control efficiency of vacuum sweeping, occurring 2.8 hr after vacuuming, were 69.8% for TP, 50.9% for IP, and 49.2% for FP. The control efficiency for water flushing at 2.2 ℓ/m^2 (0.48 gal/yd^2), approximately 40 min after application, was 54.1% for TP, 48.8% for IP, and 68.1% for FP. The control efficiency for flushing and broom sweeping approximately 40 min after application with water applied at 2.2 ℓ/m^2 (0.48 gal/yd^2), was 69.3% for TP, 78.0% for IP, and 71.8% for FP.

Earlier MRI studies of open dust sources in the iron and steel industry produced data bases which were used to develop predictive emission factor equations. The precision factors associated with the paved and unpaved road equations were 2.20 and 1.48, respectively. When the results of the 18 tests of uncontrolled particulate emissions from vehicular traffic on roads performed during this study were added to the data bases, the precision factors increased to 3.95 and 1.98, respectively. These increases indicate the need for possible refinement of the paved and unpaved road equations based on the larger data bases now available.

The portable wind tunnel method was the technique utilized to measure uncontrolled and controlled emission factors from storage pile wind erosion. The wind tunnel method involves the measurement of the amount of emissions eroded from a given surface under a known wind speed. MRI's portable open-floored wind tunnel was placed directly on the surface to be tested and the tunnel wind flow adjusted to predetermined centerline speeds. The emissions eroded from the surface were measured isokinetically at a single point in the sampling section of the tunnel with a sampling train consisting of a tapered probe, cyclone precollector, parallel slot cascade impactor, backup filter, and high volume sampler.

Wind erosion from storage piles was quantified during 29 tests of uncontrolled and controlled emission factors. Nearly all of the tests were conducted on coal surfaces with two control techniques being studied separately: (1) a 17% solution of Coherex® in water applied at an intensity of

3.4 ℓ/m² (0.74 gal/yd²), and (2) a 2.8% solution of Dow Chemical M-167 Latex Binder in water applied at an average intensity of 6.8 ℓ/m² (1.5 gal/yd²). The control efficiency of Coherex® applied at the above intensity to an undisturbed steam coal surface approximately 60 days before the test, under a wind of 15.0 m/s (33.8 mph) at 15.2 cm (6 in.) above the ground, was 89.6% for TP and approximately 62% for IP and FP. The control efficiency of the latex binder on a low volatility coking coal 2 days after application, under a 14.3 m/s (32.0 mph) wind speed at 15.2 cm (6 in.) above the ground, was 37.0% for TP and near zero for IP and FP. However, when the wind speed was increased to 17.2 m/s (38.5 mph), the control efficiency increased to 90.0% for TP, 68.8% for IP, and 14.7% for FP. The efficiency under the same wind speed, 17.2 m/s, decayed 4 days after application to 43.2% for TP, 48.1% for IP, and 30.4% for FP.

Three iron and steel plants were surveyed to determine open source emission control design, operation and cost parameters. Design and operation parameters included application intensity, application frequency, life expectancy, applicator equipment manufacturer, normal operating speed, capacity, fuel consumption, vehicle weight, number and capacity of nozzles at a specified pressure, and maintenance problems. Cost data included operating, maintenance and capital investment costs. The operating and maintenance costs were further subdivided into labor, gasoline and oil, maintenance and repair, and depreciation costs. The capital investment costs included purchase and installation of primary and ancillary equipment.

The conclusions gleaned from this study are as follows:

1. Open dust emissions from the entire integrated iron and steel industry for 1978 were estimated at 88,800 T/yr of suspended particulate. The total can be subdivided into the following general categories:

Category	Percent Contribution
Vehicular traffic on unpaved roads	70.4
Wind erosion	15.0
Vehicular traffic on paved roads	12.7
Continuous raw material handling operations	1.6
Batch raw material handling operations	0.3

2. A decay in control efficiency with time after application was measured for most control techniques tested. This means that a reported efficiency value has meaning only when given in conjunction with a time after a specified application.

3. There is some indication that, soon after application of some control measures, control efficiency varies as a function of particle size, with the efficiency decreasing with decreasing particle size. However, in time this difference disappears and the control efficiency then shows no dependence on particle size.

4. Wind erosion from the coarse aggregate storage piles tested and observed at iron and steel plants is probably much less than previously thought. Testing has shown that for typical storage pile surfaces, 10 m wind speeds in excess of 14.8 m/s (33.2 mph) are necessary for wind erosion to even begin. Also, crusts on piles and exposed surfaces are very effective inhibitors of wind erosion as long as the crust remains unbroken. Current thinking suggests that the major wind erosion problem is expected to exist on uncrusted areas surrounding the piles, on uncrusted exposed areas and on unpaved roads and uncrusted shoulders. Also, piles which have dozer or scraper traffic on them (atypical in the iron and steel industry) are susceptible to wind erosion. Finally, as would be expected, uncrusted piles of fine, dry material are also susceptible to wind erosion.

5. The control efficiency of the latex binder tested for effectiveness in reducing wind erosion increased with increasing wind speeds. It is possible that this may apply to other wind erosion dust supressants and to a broader range of wind speeds than those tested, but the data are still too sparse to support that inference.

6. The optimal cost-effective technique for applying open dust controls is to make the application and then reapply only after the initial application has decayed to zero control efficiency. However, this will yield only about 50% control efficiency, assuming the technique started at 100%. In controlled emissions trading (such as offsets, banking and bubbles), much more than 50% reduction in open dust source emissions may be needed. Thus, optimization of cost-effectiveness in the control of open dust source emissions must always be considered in the context of a minimally acceptable level of control.

   There is no clear-cut definition of "best" control strategy for open dust source emissions. Two possible definitions are:

   a. That strategy which achieves the constraint of an acceptable level of emissions reduction at the least cost; and

   b. That strategy which achieves the minimally acceptable level of control and is the least expensive per unit mass of emissions reduced.

   Although the cost of (b) cannot be less than that of (a), (b) may indeed prove to be more desirable in the long term because greater offsets are possible and thus represents the most efficient use of funds possible.

7. Evaluation of the emission reduction effectiveness of an open dust source control measure requires the acquisition of detailed performance data on the control measure. The performance data gathered to date on open dust sources in the iron and steel industry has focused on the efficiencies of freshly applied control measures for given sets of application parameters. Additional field test would be required to determine the long term efficiency decay.

8. As with the initial control efficiency, the decay rate of a control measure should depend in part on the application parameters. Also, there may be a residual effect of previous control applications which changes the shape of the decay of curve, although this residual effect may become less important after repeated reapplication-decay cycles. Theoretically, a mathematical relationship could be developed which expresses mean control efficiency (during the period between applications) as a function of the application parameters and the frequency of application once a sufficiently large emissions data base has been obtained.

9. A likely effectiveness parameter for an unpaved road treated with a chemical binder is the surface silt loading. This parameter, which appears in the emission factor equation for paved roads, is a measure of the dust entrainment potential of a paved road. Limited measurements of loadings on chemically treated unpaved roads shows that the loadings correlate with controlled emissions.

10. The current open source emissions data base is quite limited compared to that for process sources. Predicted emissions for open sources are thus subject to a greater uncertainty, perhaps as high as a factor of 2 or 3 compared to ±50 percent for process sources. This level of uncertainty leads to corresponding levels of uncertainty when implementing emissions trading policies. There are several parameters affecting the overall efficiency of open source emission control technology. Taking unpaved roads as an example, the frequency of application and the application rate, or intensity, of the chemical suppressant are of paramount importance. The current data base does not include control efficiency decay measurements for any suppressant at even one set of these parameters. This situation obviously leads to large uncertainties in any emission trade.

1.0 INTRODUCTION

Previous studies of open dust particulate emissions from integrated iron and steel plants have provided strong evidence that open dust sources such as vehicular traffic on unpaved and paved roads, aggregate material handling, and wind erosion should occupy a prime position in control strategy development.[1,2] These conclusions were based on comparability between industry-wide uncontrolled emissions from open dust sources and typically controlled fugitive emissions from major process sources such as steel-making furnaces, blast furnaces, coke ovens, and sinter machines. Moreover, preliminary cost-effectiveness analysis of promising control options for open dust sources indicated that control of open dust sources might result in significantly improved air quality at a lower cost in relation to control of process sources. Cost-effectiveness is defined as dollars expended per unit mass of particulate emissions prevented by control. These preliminary conclusions warranted the gathering of more definitive data on control performance and costs for open dust sources in the steel industry.

The cost reduction potential of open dust sources has not been missed by the iron and steel industry. With the advent of the Bubble Policy (Alternative Emissions Reduction Options) on December 11, 1979, (revised April 7, 1982) the industry has recognized the economics of controlling open dust sources as compared to implementing more costly controls on stack and process fugitive sources of particulate emissions. However, as a requirement of the Bubble Policy, it must be demonstrated that no net gain in emissions occurs from an imaginary bubble surrounding the plant.

In order to demonstrate that there is no net gain in emissions as a result of a proposed controlled trading scenario, the controlled emission rate for an open dust source must be estimated using the following equation:

$$R = Me(1-C)/2{,}000$$

where:
- R = mass emission rate (tons/year)
- M = annual source extent
- e = uncontrolled emission factor, i.e., pounds of uncontrolled emissions per unit of source extent
- C = overall control efficiency expressed as a fraction.

Values for the uncontrolled emission factor (e) can be calculated using the predictive emission factor equations shown in Table 1-1. These predictive equations are the outcomes of numerous prior MRI field tests.[1,2,3,4,5] Parameters which may affect particulate emission levels from open sources such as moisture and silt contents of the emitting material or equipment characteristics were identified and measured during the testing process. For those sources with a sufficient number of tests, multiple linear regression formed the basis upon which significant variables were identified and then used in developing the predictive equation.

TABLE 1-1. OPEN DUST EMISSION FACTORS EXPERIMENTALLY DETERMINED BY MRI

Source category	Measure of extent	Emission factor[a] (lb/unit of source extent)	Correction parameters
1. Unpaved roads	Vehicle-miles traveled	$5.9 \left(\frac{s}{12}\right) \left(\frac{S}{30}\right) \left(\frac{W}{3}\right)^{0.7} \left(\frac{w}{4}\right)^{0.5} \frac{d}{365}$	s = Silt content of aggregate or road surface material (%)
2. Paved roads	Vehicle-miles traveled	$0.09\ I \left(\frac{4}{N}\right) \left(\frac{s}{10}\right) \left(\frac{L}{1,000}\right) \left(\frac{W}{3}\right)^{0.7}$	S = Average vehicle speed (mph) W = Average vehicle weight (tons) L = Surface dust loading on traveled portion of road (lb/mile)
3. Batch load-in (e.g., front-end loader, railcar dump)	Tons of material loaded in	$0.0018 \frac{\left(\frac{s}{5}\right) \left(\frac{U}{5}\right) \left(\frac{h}{5}\right)}{\left(\frac{M}{2}\right)^{2} \left(\frac{Y}{6}\right)^{0.33}}$	U = Mean wind speed at 4 m above ground (mph) M = Unbound moisture content of aggregate or road surface material (%)
4. Continuous load-in (e.g., stacker, transfer station)	Tons of material loaded in	$0.0018 \frac{\left(\frac{s}{5}\right) \left(\frac{U}{5}\right) \left(\frac{h}{10}\right)}{\left(\frac{M}{2}\right)^{2}}$	Y = Dumping device capacity (yd^3) K = Activity factor[b]
5. Active storage pile maintenance and traffic	Tons of material put through storage	$0.10\ K \left(\frac{s}{1.5}\right) \left(\frac{d}{235}\right)$	d = Number of dry days per year f = Percentage of time wind speed exceeds 12 mph at 1 ft above ground
6. Active storage pile wind erosion	Tons of material put through storage	$0.05 \left(\frac{s}{1.5}\right) \left(\frac{d}{235}\right) \left(\frac{F}{15}\right) \left(\frac{D}{90}\right)$	F = Percentage of time unobstructed wind speed exceeds 12 mph at mean pile height D = Duration of material storage (days)
7. Batch load-out (e.g., front-end loader, railcar dump)	Tons of material loaded out	$0.0018 \frac{\left(\frac{s}{5}\right) \left(\frac{U}{5}\right) \left(\frac{h}{5}\right)}{\left(\frac{M}{2}\right)^{2} \left(\frac{Y}{6}\right)^{0.33}}$	e = Surface erodibility (tons/acre/year) P-E = Thornthwaite's Precipitation-Evaporation Index
8. Wind erosion of exposed areas	Acre-years of exposed land	$3.400 \frac{\left(\frac{e}{50}\right) \left(\frac{s}{15}\right) \left(\frac{f}{25}\right)}{\left(\frac{P-E}{50}\right)^{2}}$	N = Number of active travel lanes I = Industrial road augmentation factor[c] w = Average number of vehicle wheels h = Drop height (ft)

a Represents particulate smaller than 30 μm in diameter based on particle density of 2.5 g/cm^3.

b Equals 1.0 for front-end loader maintaining pile tidiness and 50 round trips of customer trucks per day in the storage area.

c
* Equals 7.0 for trucks coming from unpaved to paved roads and releasing dust from vehicle underbodies;
* Equals 3.5 when 20% of the vehicles are forced to travel temporarily with one set of wheels on an unpaved road berm while passing on narrow roads;
* Equals 1.0 for traffic entirely on paved surfaces.

The annual source extent can be estimated by plant management from plant records and discussions with operating personnel. The variable with the least accurate data to support an estimate of controlled emissions is the control efficiency. Table 1-2 presents a summary of open dust source controls that are or have been used in the iron and steel industry. Control efficiency values are needed for all the techniques shown in Table 1-2.

TABLE 1-2. SUMMARY OF POTENTIAL OPEN DUST SOURCE CONTROL TECHNIQUES

Source	Control technique
I. Unpaved roads and parking lots.	A. Watering B. Chemical treatment[a] C. Paving D. Oiling
II. Paved roads and parking lots.	A. Sweeping 1. Broom a. Wet b. Dry 2. Vacuum B. Flushing
III. Material handling and storage pile wind erosion.	A. Watering B. Chemical treatment[a]
IV. Conveyor transfer stations.	A. Enclosures B. Water sprays C. Chemical sprays[a]
V. Exposed area wind erosion.	A. Watering B. Chemical treatment[a] C. Vegetation D. Oiling

[a] For example: (1) salts, (2) lignin sulfonates, (3) petroleum resins, (4) wetting agents, and (5) latex binders.

1.1 VARIABLES AFFECTING CONTROL EFFICIENCY

Open dust source control efficiency values can be affected by four broad categories of variables: (a) time-related variables, (b) control application variables, (c) equipment characteristics, and (d) characteristics of surface to be treated.

1.1.1 Time-Related Variables

Because of the finite durability of all surface-treatment control techniques, ranging from hours (watering) to years (paving), it is essential to tie an efficiency value to a frequency of application (or maintenance). For measures of lengthy durability, the maintenance program required to sustain control effectiveness should be indicated. One likely pitfall to be avoided is the use of field data on a freshly applied control measure to represent the lifetime of the measure.

The climate, for the most part, accelerates the decay of control performance adversely through weathering. For example, freeze-thaw cycles break up the crust formed by binding agents; precipitation washes away water-soluble chemical treatments like lignin sulfonates, and solar radiation dries out watered surfaces. On the other hand, light precipitation might improve the efficiency of water extenders and hygroscopic chemicals like calcium chloride, and will definitely improve efficiency of watering.

1.1.2 Control Application Variables

The control application variables affecting control performance are: (a) application intensity; (b) application frequency; (c) dilution ratio; and (d) application procedure. Application intensity is the volume of solution placed on the surface per unit area of surface. The higher the intensity, the better the expected control efficiency. However, this relationship applies only to a point, because too intense an application will begin to run off the surface. The point where runoff occurs depends on the slope and porosity of the surface.

1.1.3 Equipment Characteristics

The equipment characteristics that affect control efficiency values are those involved in imparting energy to the treated surface which might break the adhesive bonds keeping fine particulate composing the surface from becoming airborne. For example, vehicle weight and speed can affect the control efficiency for chemical treatment of unpaved roads. An increase in either variable serves to accelerate the decay in efficiency. Figure 1-1 is a general plot portraying the change in rate of decay of the control efficiency for a chemical suppressant applied to an unpaved road as a function of vehicle speed, weight, and traffic volume.

1.1.4 Characteristics of Surface to be Treated

Any surface characteristics which contribute to the breaking of a surface crust will affect the control efficiency. For example, for unpaved road controls, road structure characteristics affect control efficiency.[6] These characteristics are: (a) combined subgrade and base bearing strength; (b) amount of fine material (silt and clay) on the surface of the road; and (c) the friability of the road surface material. Unacceptable values for these variables mainly affect the performance of chemical controls. Low bearing strength causes the road to flex and rut in spots with the passage

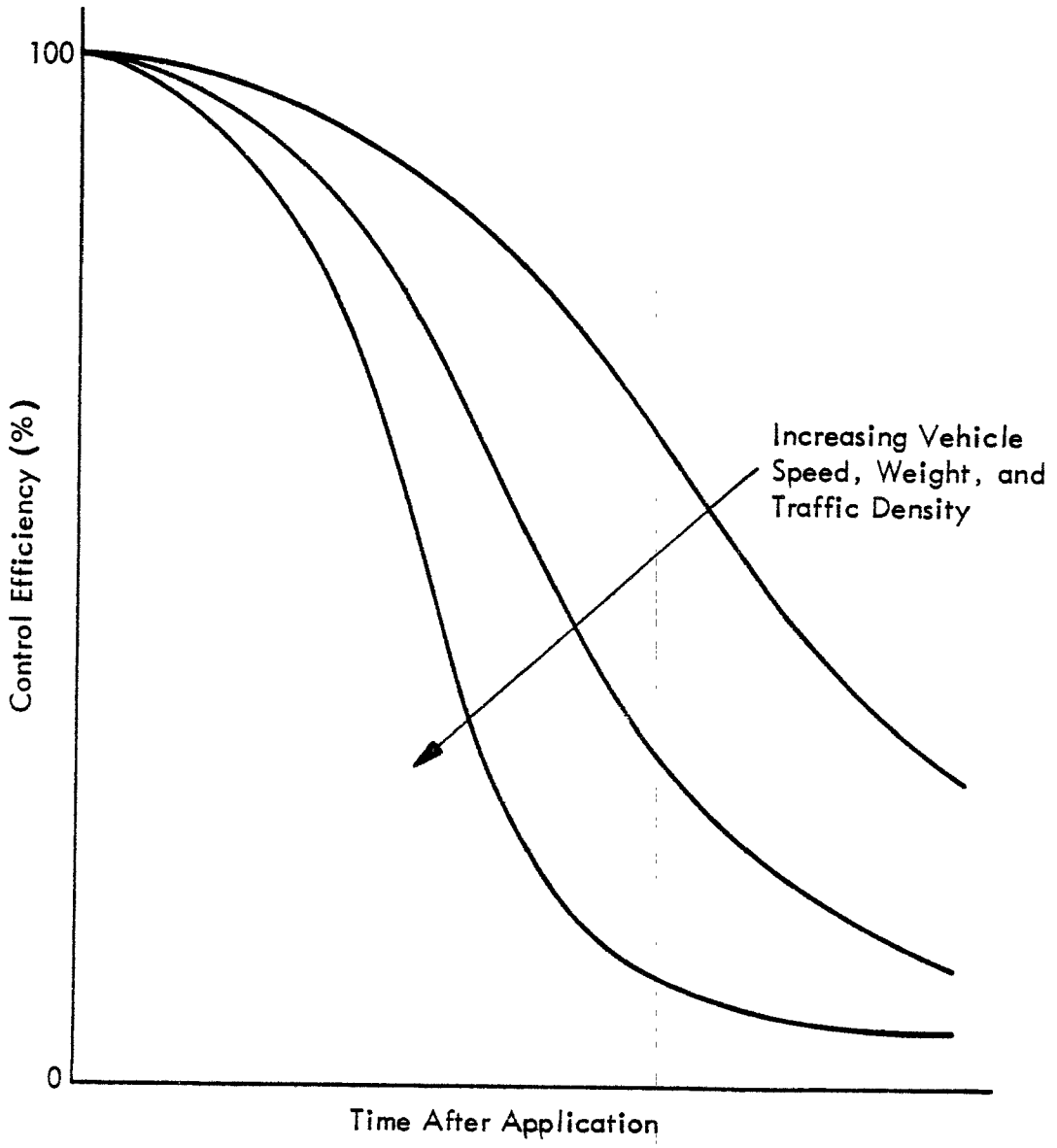

Figure 1-1. Effect of vehicle speed, weight, and traffic density on control performance.

of heavy trucks; this destroys the compacted surface enhanced by the chemical treatment. A lack of fine material in the wearing surface deprives the chemical treatment of the increased particle surface area necessary for interparticle bonding. Finally, the larger particles of a friable wearing surface material simply break up under the weight of the vehicles and cover the treated road with a layer of untreated dust.

1.2 PROJECT OBJECTIVES

The overall objective of this project was to provide data that will document quantities of particulates generated from controlled open dust sources at steel plants and the cost-effectiveness of control procedures for eliminating or reducing emissions. The separate tasks necessary to achieve the above objective were:

1. Conduct field tests to measure emissions from open dust sources in order to determine the efficiency of selected control procedures.

2. Evaluate data obtained in the test program in order to determine the change in efficiency over time.

3. Develop design and operating information on all control procedures evaluated, including optimum operating procedures; operator and material requirements; design parameters; capital, operating and maintenance costs; and energy requirements.

1.3 REPORT STRUCTURE

This report is structured as follows: (a) Section 2.0 contains the results of a 10-plant survey to determine the extent of open dust sources and controls in the iron and steel industry; (b) Section 3.0 contains the methodology and results of source testing via exposure profiling; (c) Section 4.0 contains the methodology and result of wind erosion testing via a portable wind tunnel; (d) Section 5.0 contains the presentation of cost, design, and operating information related to control techniques; and (e) Sections 6.0 through 9.0 present additional research needs, references, glossary and English to metric conversion units, respectively.

This report contains both metric and English units. In the text, most numbers are reported in metric units with English units in parentheses. For numbers commonly expressed in metric units in the air pollution field, no English equivalent is given, i.e., particle size is in μm, density is in g/cm^3, and concentration is in $\mu g/m^3$.

Numbers in this report are generally rounded to three significant figures; therefore, columns of numbers may not add to the exact total listed. Rounding to three significant figures produces a rounding error of less than 0.5%.

2.0 SELECTION OF SOURCES, SAMPLING METHODS, SITES AND CONTROL TECHNIQUES

In order to select the control techniques that should be tested, a survey was conducted to ascertain the most important open dust sources as determined by their uncontrolled emission rates. The survey was also designed to determine the control techniques typically applied to these sources at iron and steel plants. Finally, surveyed plants utilizing the most typical control techniques for the most important sources were selected as candidate test sites.

2.1 SURVEY OF OPEN DUST SOURCES AND CONTROLS

In order to calculate an open dust emissions inventory and determine what control techniques were being utilized in the iron and steel industry, a survey of 10 plants was conducted. The survey was conducted using materials handling flow charts to be completed by each plant.

The flow charts displayed several alternate handling schemes for the following materials:

1. Coal
2. Iron ore pellets
3. Unagglomerated iron ore
4. Limestone/dolomite
5. Sinter, nodules, and briquettes
6. Coke
7. Sinter input (flux, iron ore, and coke fines)
8. Slag

The completed flow charts for a specific plant provided information on: (a) the materials handling routes used at the plant; (b) the amount of material passing through each handling step; (c) physical characteristics of the handling equipment (e.g., bucket size, drop height, etc.); and (d) the handling steps that are controlled and the type of control utilized.

Through the assistance of the American Iron and Steel Institute (Mr. John Barker, Chairman of the AISI Fugitive Emissions Committee, and Mr. William Benzer), the following companies agreed to complete the materials handling flow charts for the indicated plants:

Armco Steel, Incorporated
- Middletown Works
- Houston Works

Interlake, Incorporated
- Chicago Plant (coke ovens and blast furnace)
- Works at Riverdale (BOFs)

Bethlehem Steel Corporation
- Burns Harbor
- Sparrows Point

National Steel Corporation
- River Rouge Plant (coke ovens and blast furnaces)
- Works at Ecorse (BOFs and EAFs)

U.S. Steel Corporation
- Geneva Works
- Gary Works

Jones and Laughlin Steel Corporation
- Aliquippa Works
- Indiana Harbor Works

Appendix A presents materials handling data compiled from the charts for the above 10 plants (Interlake's Chicago plant and the works at Riverdale are counted as one complete facility; National's River Rouge Plant and the works at Ecorse are treated as one facility).

2.1.1 Updated Emissions Inventory

The completed materials handling flow charts for the 10 plants provided input data for an industry-wide emissions inventory of open dust sources. An initial inventory was developed in Reference 2 and is updated in this report using the most current emission factors (Table 1-1) as well as revised (1978) source extent data obtained from the 10-plant survey. Details of the inventory calculations are given in the following paragraphs.

2.1.1.1 Vehicular Traffic on Unpaved Surfaces--

Emission factors for light, medium, and heavy duty traffic on unpaved roads were calculated using the predictive equation shown in Table 1-1. Since the 4-plant survey report in Reference 2 contained more detailed traffic data than the 10-plant survey described in Section 2.1, the values for the correction parameters in the predictive emission factor equation as well as the values for the source extent were calculated from the 4-plant survey. Finally, it was assumed that there were 50 major plants in the nation, each producing the emission rate calculated for the average plant.

The emission factor for storage pile maintenance and related traffic was developed from the emission factors calculated in the 4-plant survey. Separate weighted emission factors were determined for pellets and coal. The weighted emission factors were multiplied by the 1978 nationwide tonnages of these materials received at iron and steel plants in order to calculate the emission rate. Finally, the calculated emission rate for pellets and coal was linearly scaled by the weight ratio of all aggregate materials handled to the sum of coal and pellets handled. In this manner, the total nationwide emission rate for pile maintenance and other traffic associated with storage of all aggregate material was calculated.

An emission factor for vehicular traffic on unpaved parking lots was calculated using the unpaved road equation in Table 1-1. The following assumptions were made regarding correction parameters and source extent:

1. The 449,200 employees of the iron and steel industry involved with the sale and production of iron and steel products in 1978 drive to work.

2. An average of two people travel in each car.

3. Each person works 250 days/year.

4. Fifty percent of cars use unpaved parking lots.

5. Cars travel an average of 200 ft in and 200 ft out of lots each day.

6. Cars travel at an average speed of 10 mph.

7. Silt content of unpaved parking lots aggregate = 12%.

2.1.1.2 Vehicular Traffic on Paved Roads--

The emission factor for paved roads was calculated as the average of eight tests performed by MRI at iron and steel plants.[2] The emission factor was then multiplied by the average source extent (vehicle-miles traveled) calculated from the 4-plant survey. Finally, the emission rate for paved road traffic at the average plant was multiplied by 50 in order to extrapolate to nationwide emissions.

2.1.1.3 Batch and Continuous Drop Operations--

The following average values obtained from the 10-plant survey were used in calculating emissions from batch and continuous drop operations:

1. Sixty-five percent of the raw aggregate received at the average plant arrives by barge and 35% by rail.

2. The 35% arriving by rail is unloaded in 100 ton batches and is dropped an equivalent of 5 exposed feet.

3. Of the 65% arriving by barge, half is batch unloaded by a 12 yd^3 clamshell and dropped 24 ft, while half is continuously unloaded and dropped 10 ft.

4. The average raw and intermediate aggregate material passes through seven transfer stations in its lifetime at the average iron and steel plant and is dropped each time an average of 8 ft.

5. Eighty percent of the raw and waste material handled in iron and steel plants is stored in open piles.

6. Of the 80% stored in the open, 50% is loaded into the pile by stacker, 25% by clamshell, and 5% by truck or scraper.

7. During load-in of material to an open storage pile, the average 12 yd^3 clamshell drops material 30 ft; the average stacker drops material 13 ft; and the average 35 ton capacity haul truck or scraper drops material 5 ft.

8. Of the 80% stored in the open, 35% is loaded out of the pile by clamshell, 30% by bucket-wheel, 10% by front-end loader, and 5% by miscellaneous techniques.

9. During load-out of material from an open storage pile, the average 10 yd^3 clamshell drops material 5 ft; the average bucket-wheel drops material 10 ft; and the average 10 yd^3 front-end loader drops material 5 ft.

10. The average plant with OHF or BOF shops produces most of its own coke and sinter and sends most of it directly to the blast furnace without open storage.

The two aggregates selected as representative of all aggregate materials were coal and iron-bearing pellets. These particular materials were selected because: (a) they include about 50% of the total aggregate handled at iron and steel plants, and (b) more data are available on the silt and moisture of these materials than other aggregate materials stored in iron and steel plants.

Silt and moisture measurements obtained during the 4-plant survey and during past MRI emission factor testing efforts were averaged in an attempt to obtain representative nationwide values. For coal, the average silt and moisture percentages were 5.0 and 4.8, respectively; and for pellets, the average silt and moisture percentages were 4.9 and 2.1, respectively.

Based on the above assumptions and the average silt and moisture values, 1978 nationwide emission rates for coal and pellet batch and continuous drop sources were calculated. The sum of these emission rates was then scaled linearly by the weight ratio of total aggregate placed in open storage to the sum of coal and pellets handled. (The amounts of each material handled in 1978 are shown in Table 2 1.) In this fashion, the emission rates for total aggregate batch drop and continuous drop operations were calculated.

TABLE 2-1. AGGREGATE MATERIALS HANDLED AT IRON AND STEEL PLANTS IN 1978

Material	Aggregate type	Consumption in 1978 (10^6 tons)
Coal	Raw	67.5
Pellets	Raw	86.9
Natural iron ore	Raw	14.4
Flux	Raw	28.7
Sinter	Intermediate	35.6
Coke	Intermediate	55.6
Slag	Waste	43.8

Source: 1978 Annual Statistics of the American Iron and Steel Institute.

2.1.1.4 Wind Erosion--

The emission factors for wind erosion from pellet and coal piles were calculated using the storage pile wind erosion equation in Table 1-1. The correction parameters were obtained from both the 10-plant and the previous 4-plant surveys.

The emission rates for coal and pellets were calculated by multiplying the emission factors by the 1978 nationwide amounts of coal and pellets handled at iron and steel plants. The total emission rate for wind erosion from all raw and waste aggregate piles was calculated by linearly scaling the sum of the emission rates for coal and pellets by the weight ratio of the total raw and waste aggregate handled to the sum of the coal and pellets handled.

The emission factor for wind erosion of bare areas was calculated as a weighted average of the emission factors for two of the four previous surveyed plants reported in Reference 2. These two plants were most representative of the climate experienced by the majority of the industry. The plant emission factors were weighted by source extent (acres exposed).

The emission rate for the average plant was calculated by multiplying the weighted average emission factor by the arithmetic average source extent observed at the four previously surveyed plants. Finally, the nationwide emission rate was obtained by multiplying the emission rate for the average plant by 50, which is the number of major plants estimated to exist in the country.

2.1.1.5 Emissions Inventory Summary--

The updated inventory, shown in Table 2-2, yields a source ranking similar to the inventory published earlier.[2] Vehicular traffic on unpaved surfaces accounts for 70% of the total open dust source emissions while batch and continuous drop operations combine for less than 2% of the total.

The data base on the field performance of control measures for open dust sources is small. Therefore, control measure testing should be distributed in relation to the magnitude of uncontrolled emissions. According to Table 2-2, testing should focus on control measures applicable to:

- Unpaved roads;
- Paved roads;
- Storage pile maintenance;
- Storage pile wind erosion;
- Exposed area wind erosion;
- Unpaved parking lots; and
- Conveyor transfer stations.

2.1.2 Summary of Current Industry Control Practices

Analysis of the materials handling flow charts for the 10 surveyed integrated iron and steel plants indicate that a number of control techniques were being applied in 1978 to open dust sources at several locations. These

TABLE 2-2. 1978 INVENTORY OF OPEN DUST SOURCE CONTRIBUTIONS TO SUSPENDED PARTICULATE EMISSIONS

Source	1978 Nationwide suspended particulate emission rate for the iron and steel industry uncontrolled[a] (tons/yr)	Percent of total emissions
• Vehicular traffic on unpaved surfaces		70.4
Unpaved roads	50,100	
Storage pile maintenance	10,800	
Unpaved parking lots	1,600	
• Vehicular traffic on paved surfaces	11,300	12.7
• Batch drop operations		0.3
Barge unloading by clamshell	75	
Railcar unloading	11	
Storage pile load-in by clamshell	107	
Storage pile load-in by truck/scraper	3	
Storage pile load-out by clamshell	25	
Storage pile load-out by front-end loader	8	
• Continuous drop operations		1.6
Barge unloading by bucket ladder or self unloader	48	
Conveyor transfer stations	1,220	
Storage pile load-in by stacker	117	
Storage pile load-out by bucket wheels	53	
• Wind erosion		15.0
Storage piles	10,200	
Exposed areas	3,110	
	88,800	

a Except that natural control due to precipitation is included.

are summarized in Table 2-3 along with control data gathered from other information sources. Table 2-3 is by no means a complete industry survey, but is a complete summary of 10 of the approximately 50 major integrated plants in the country.

2.2 SELECTION OF TEST SITES

Tables 2-2 and 2-3 formed the basis for test site selection by indicating the largest open dust sources in the industry, the control techniques in use, and some of the sites where these techniques are applied.

It was decided to test unpaved and paved road control techniques (first and second largest sources) at Armco's Middletown and Houston Works, since many different techniques were available for testing at each site. Armco's Middletown and Bethlehem's Burns Harbor Plants were selected for testing of controls for the third largest source, wind erosion.

Testing at Armco's Middletown plant was especially desirable since it afforded the opportunity to test before and after the implementation of an extensive open dust source control program proposed under the Bubble Policy. These controls were completely implemented by August 1980.

2.3 OPEN DUST SAMPLING METHODS

Open dust emissions are especially difficult to characterize for the following reasons:

1. Emission rates have a high degree of temporal variability.

2. Emissions are discharged from a wide variety of source configurations.

3. Emissions are comprised of a wide range of particle size, including coarse particles which deposit immediately adjacent to the source.

The scheme for quantification of emission factors must effectively deal with these complications, to yield source-specific emission data needed to evaluate the priorities for emission control and the effectiveness of control measures.

Four basic techniques have been utilized in testing open dust sources:

1. The upwind/downwind method involves measurement of concentrations upwind and downwind of the source, utilizing ground-based samplers (usually hi-vol samplers) under known meteorological conditions. Atmospheric dispersion equations are used to back-calculate the emission rate which most nearly produces the measured concentrations.

2. MRI's exposure profiling method involves direct measurement of the total passage of open dust source emissions immediately downwind of the source by means of simultaneous multipoint sampling over the effective cross-section of the open dust source emission plume. This technique uses

TABLE 2-3. SUMMARY OF FUGITIVE EMISSION CONTROLS USED FROM 1978 TO PRESENT (BY PLANT)

Source	Control practice	Plant(s)
I. Unpaved roads	A. Watering	Armco - Houston Works
	B. Oiling	1. National Steel - Granite City Steel Div. 2. J&L Steel - Aliquippa Works
	C. Chemical dust suppressants	Armco - Middletown Works
	D. Paving	Armco - Middletown Works
II. Paved roads	A. Flushing	1. Armco - Middletown Works 2. Armco - Houston Works
	B. Wet broom sweeping	Armco - Houston Works
	C. Vacuum sweeping	Armco - Middletown Works
III. Storage pile (maintenance and wind erosion)	A. Watering	1. Armco - Houston Works 2. Bethlehem Steel - Burns Harbor 3. U.S. Steel - Gary Works 4. U.S. Steel - Geneva Works 5. Armco - Middletown Works
	B. Chemical sprays	1. Bethlehem Steel - Burns Harbor 2. National Steel - Great Lakes Div.
IV. Unpaved parking lots	A. Paving	Armco - Middletown Works
	B. Chemical dust suppressants	Armco - Middletown Works

TABLE 2-3. (concluded)

Source	Control practice	Plant(s)
V. Conveyor transfer stations	A. Enclosures	1. Armco - Middletown Works 2. Bethlehem Steel - Burns Harbor 3. Interlake Steel - Chicago 4. J&L Steel - Aliquippa Works 5. U.S. Steel - Geneva Works
	B. Water sprays	1. Armco-Middletown Works 2. Bethlehem Steel - Burns Harbor 3. U.S. Steel - Geneva Works 4. Armco - Houston Works
	C. Chemical sprays	Bethlehem Steel - Sparrows Point
VI. Exposed area wind erosion	Vegetation	Armco - Middletown Works

a mass-balance calculation scheme similar to EPA Method 5 rather than requiring indirect calculation through the application of a generalized atmospheric dispersion model. Moreover, based on MRI field tests of several types of open dust sources, the accuracy of measurements obtained by exposure profiling is better than that achievable by the upwind/downwind method, even with site-specific calibration of the dispersion model used in the latter method.

3. The tracer method involves the controlled release of a known amount of tracer (e.g., SF_6) at the source. Downwind from the source, the tracer concentration as well as the dust concentration from the source are measured via colocated samplers. Finally, the open dust source emission rate is calculated using the following relationship:

$$\frac{ER_p}{ER_t} = \frac{C_p}{C_t}$$

where: ER_p = Particulate emission rate

ER_t = Tracer emission rate

C_p = Particulate concentration

C_t = Tracer concentration

The use of tracers is complicated by two factors: (1) it is difficult to disperse the tracer such that its initial spread matches that of the open dust source, and (2) the tracer is normally a gas or a fine particulate which does not have the settling characteristics of the dust from the open source.

4. The wind tunnel method for measuring wind erosion emission involves the generation of a known wind speed and the measurement of the amount of emissions blown from a given surface. A portable wind tunnel which can be utilized to measure wind erosion emissions in situ is preferable to collecting a sample of the surface in the field and conducting the experiment in a laboratory wind tunnel. The second technique creates the problem that the surface is never reconstructed in exactly the same fashion as it exists in the field. For example, a surface crust which may exist in the field will be almost completely destroyed in the collection process, making it impossible to reconstruct in the laboratory.

Several of the available fugitive emission factors for integrated iron and steel plants have resulted from estimation techniques rather than measurement techniques. Estimating techniques include: (a) use of fixed percent of uncontrolled stack emissions; (b) application of data from similar processes; (c) engineering calculations; and (d) visual correlation of opacity and mass emissions. Wide use of estimating techniques has been employed because of the difficulty of testing and the lack of recognized standardized methods for measuring open dust emissons.

The most suitable and accurate technique for quantifying open dust sources (materials handling, vehicular traffic on unpaved roads, etc.) in the iron and steel industry has been shown to be exposure profiling.[1] The method is source-specific and its increased accuracy over the upwind/downwind method

and the tracer method is a result of the fact that emission factor calculation is based on direct measurement of the variable sought, i.e., mass of emissions per unit time.

For testing of wind erosion the portable wind tunnel method is MRI's preferred technique because it allows for in situ measurement of erosion rates under predetermined, controlled wind conditions. In contrast to this, the upwind/downwind method is beset with difficulties for wind erosion testing because the onset of natural erosion and its intensity is beyond the control of the investigator; moreover when natural erosion is occurring, interference caused by erosion of sources located upwind of the test sources causes problems of background interference. The main drawbacks of the portable wind tunnel method are: (a) that wind tunnel turbulence is used to simulate atmospheric turbulence; and (b) that subsequent development of emission factors requires independently determined patterns of wind flow around typical storage pile shapes. With regard to the first drawback, Gillette[7] (after whose work the MRI wind tunnel was designed) pointed out that the scale of vertical motions of the natural atmosphere and the wind tunnel are similar near the critical interface between the wind and the erodible surface, making the wind tunnel a useful device for the study of wind erosion. Moreover, relative to the second drawback, physical modeling studies (e.g., Soo et al.[8]) are underway to define storage pile wind flow patterns.

3.0 SOURCE TESTING BY EXPOSURE PROFILING

This section describes the field testing program using the exposure profiling method to determine control efficiencies for open dust sources. The following field tests were performed at two integrated iron and steel plants - Armco's Middletown Works (designated as Plant F) and Armco's Houston Works (designated as Plant B):

- Eleven tests of vehicular traffic on uncontrolled paved roads.
- Twelve tests of vehicular traffic on controlled paved roads.
- Four tests of light-duty vehicular traffic on uncontrolled unpaved roads.
- Five tests of light-duty vehicular traffic on controlled unpaved roads.
- Three tests of heavy-duty vehicular traffic on uncontrolled unpaved roads.
- Seven tests of heavy-duty vehicular traffic on controlled unpaved roads.

Maps of plants F and B are shown in Figures 3-1 and 3-2, respectively, and indicate the sites of the exposure profiling tests conducted.

3.1 QUALITY ASSURANCE

The sampling and analysis procedures followed in this field testing program were subject to certain quality control (QC) guidelines. These guidelines will be discussed in conjunction with the activities to which they apply. These procedures met or exceeded the requirements specified in the reports entitled "Quality Assurance Handbook for Air Pollution Measurement Systems, Volume II - Ambient Air Specific Methods" (EPA 600/4-77-027a) and "Ambient Monitoring Guidelines for Prevention of Significant Deterioration" (EPA 450/2-78-019).

As part of the QC program for this study, routine audits of sampling and analysis procedures were performed. The purpose of the audits was to demonstrate that measurements were made within acceptable control conditions for particulate source sampling and to assess the source testing data for precision and accuracy. Examples of items audited include gravimetric analysis,

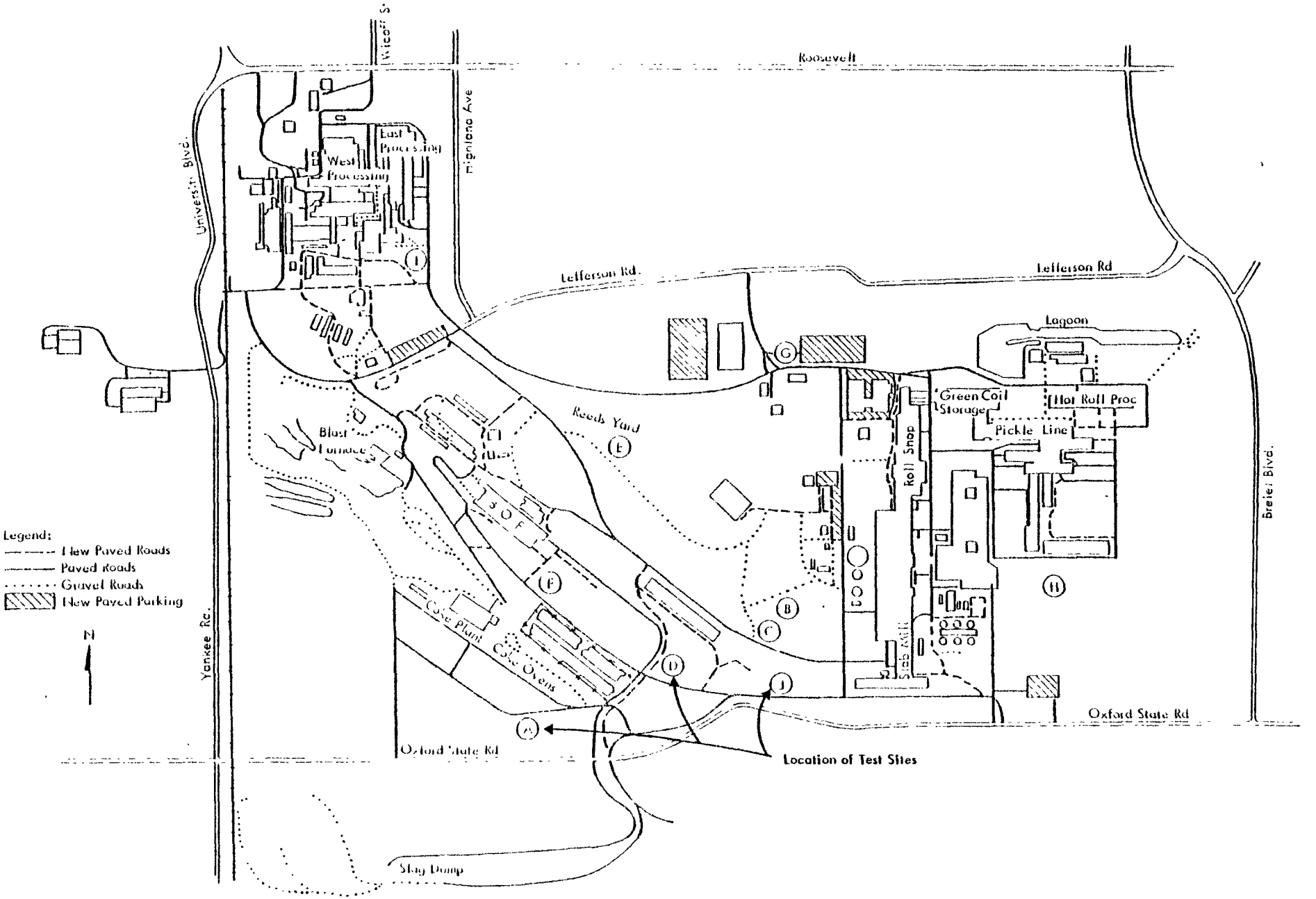

Figure 3-1. Map of plant F showing test sites.

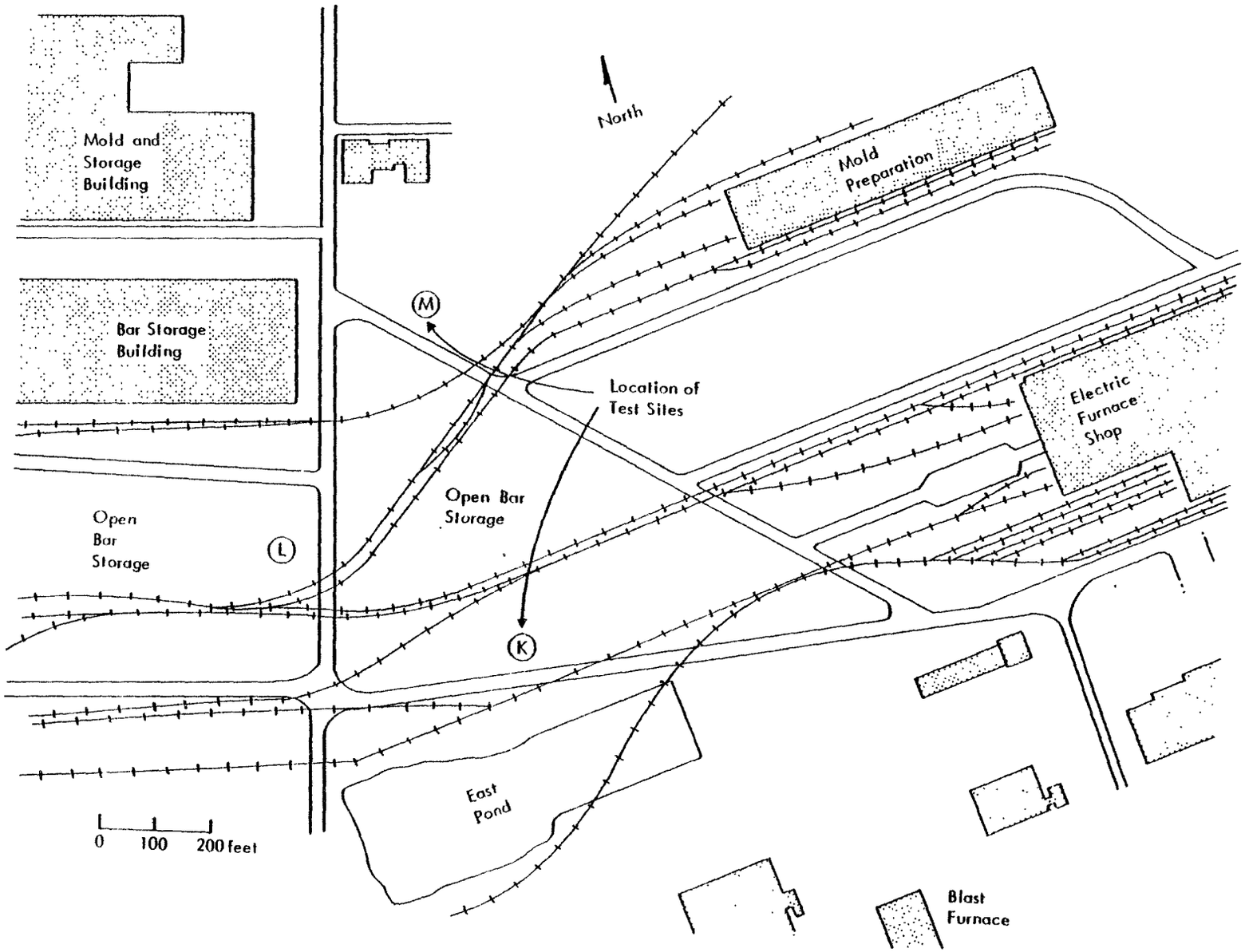

Figure 3-2. Map of plant B showing test sites.

flow rate calibration, data processing, and emission factor and control efficiency calculation. The mandatory use of specially designed reporting forms for sampling and analysis data obtained in the field and laboratory aided in the auditing procedure. Further detail on specific sampling and analysis procedures are provided in the following sections.

3.2 AIR SAMPLING TECHNIQUES AND EQUIPMENT

The exposure profiling technique utilized in this study is based on the isokinetic profiling concept that is used in conventional source testing. The passage of airborne pollutant immediately downwind of the source is measured directly by means of simultaneous multipoint sampling over the effective cross section of the open dust source plume. This technique uses a mass-balance calculation scheme similar to EPA Method 5 stack testing rather than requiring indirect calculation through the application of a generalized atmospheric dispersion model.

For measurement of nonbuoyant open dust source emissions, profiling sampling heads are distributed over a vertical network positioned just downwind (usually about 5 m) from the source. A vertical line grid of samplers is sufficient for measurement of emissions from line or moving point sources while a two-dimensional array of samplers is required for quantification of area source emissions.

The MRI exposure profiler, developed under EPA Contract No. 68-02-0619 as reported in Reference 4, was used in this study. The profiler (Figure 3-3) consists of a portable tower (4 to 6 m height) supporting an array of sampling heads. During testing, each sampling head was operated as an isokinetic exposure sampler directing passage of the flow stream through a settling chamber and then upward through a standard 20.3 cm by 25.4 cm (8 in. by 10 in.) glass fiber filter positioned horizontally. Sampling intakes were pointed into the wind, and sampling velocity of each intake was adjusted to match the local mean wind speed, as determined by 15 min averages prior to and during the test. Throughout each test, wind speed was monitored by recording anemometers at two heights, and the vertical wind speed profile was determined by assuming a logarithmic distribution.

High volume parallel slot cascade impactors with 34 m^3/hr (20 cfm) flow controllers were used to measure particle size distribution at two heights along side of the exposure profiler. The impactor units were equipped with a cyclone preseparator to remove coarse particles which otherwise would tend to bounce off the glass fiber impaction substrates, causing fine particle measurement bias. To further reduce particle bounce problems, each stage of the impactor substrates was sprayed with a stopcock grease solution. The stages then had a sticky surface which inhibited particle bounce.

Two other types of equipment were used during this study: (1) the standard high volume (hi-vol) air sampler and (2) the recently developed EPA version of the size selective inlet (SSI) mounted on an otherwise standard high volume air sampler. The standard high-volume sampler measures total suspended particulate matter (TSP) which consists of particles smaller than approximately 30 μm in aerodynamic diameter. When fitted with an SSI,

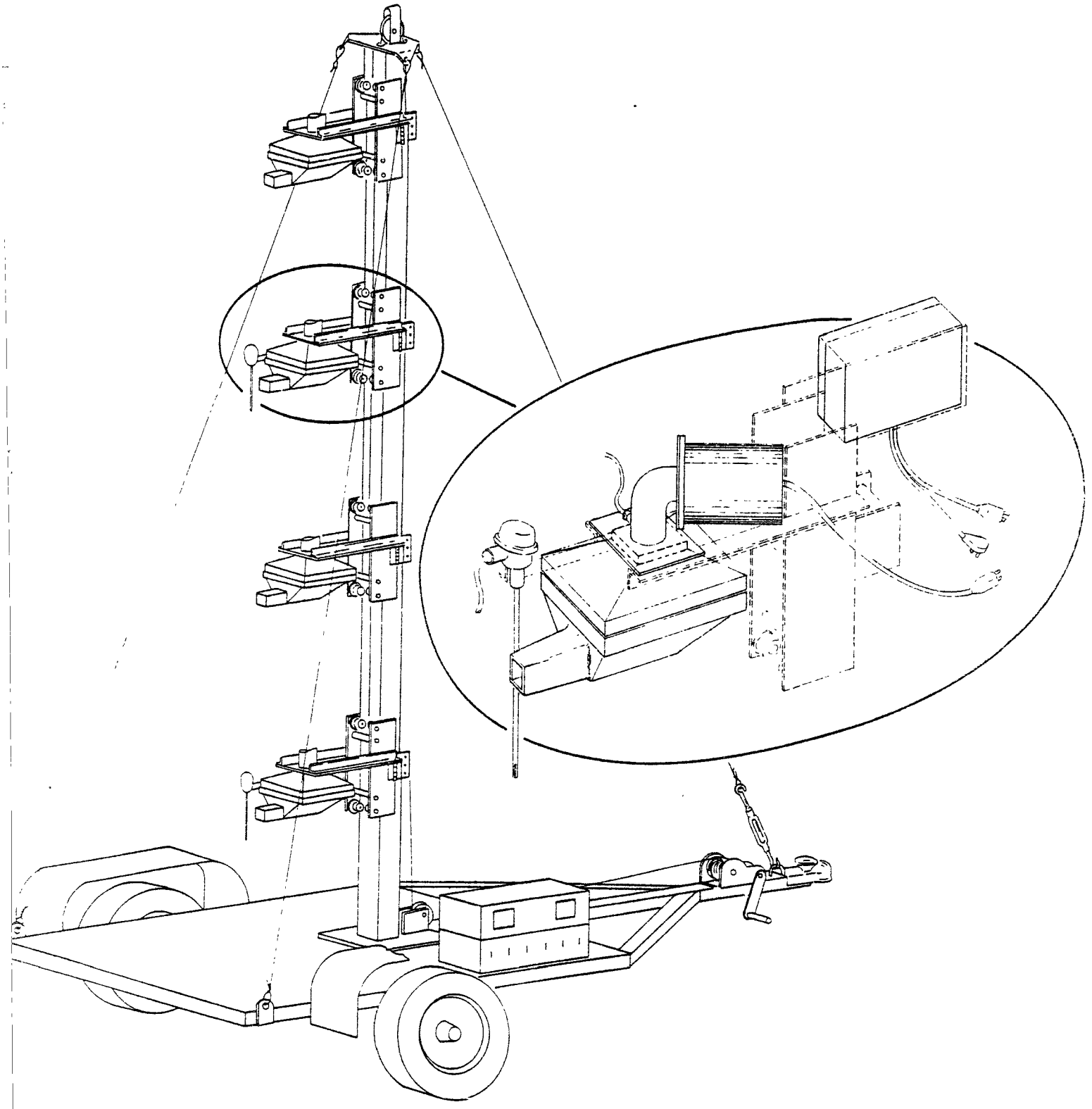

Figure 3-3. MRI exposure profiler.

the high-volume air sampler measures inhalable particulate (IP) concentrations consisting of particles smaller than 15 μm in aerodynamic diameter.

Three equipment deployment schemes shown in Figures 3-4 through 3-6 were employed during the course of this study. The basic downwind equipment included an exposure profiling system with either four or five sampling heads spaced 1 m (3.28 ft) apart and high-volume cascade impactors fitted with cyclone preseparators at 1 m (3.28 ft) and 3 m (9.84 ft) heights. In addition, a standard high-volume air sampler was operated at a height of 2 m (6.56 ft). The upwind air sampling equipment consisted of a standard high-volume air sampler at a height of 2 m (6.56 ft) and either one or two hi-vols fitted with SSIs, operated at 2 m (6.56 ft) or 1 m (3.28 ft) and 3 m (9.84 ft), respectively.

3.3 PARTICULATE SAMPLE HANDLING AND ANALYSIS

3.3.1 Preparation of Sample Collection Media

Particulate samples were collected on Type A slotted glass fiber impactor substrates and on Type AE glass fiber filters. To minimize the problem of particle bounce, all glass fiber cascade impactor substrates were greased. The grease solution was prepared by dissolving 140 g of stopcock grease in 1 liter of reagent grade toluene. No grease was applied to the borders and backs of the substrates. The substrates were handled, transported and stored in specially designed frames which protected the greased surfaces.

Prior to the initial weighing, the greased substrates and filters were equilibrated for 24 hr at constant temperature and humidity in a special weighing room. During weighing, the balance was checked at frequent intervals with standard weights to assure accuracy. The substrates and filters remained in the same controlled environment for another 24 hr, after which a second analyst reweighed them as a precision check. If a substrate or filter could not pass audit limits, the entire lot was reweighed. Ten percent of the substrates and filters taken to the field were used as blanks. The quality assurance guidelines pertaining to preparation of sample collection media are presented in Table 3-1.

3.3.2 Pre-Test Procedures/Evaluation of Sampling Conditions

Prior to equipment deployment, a number of decisions were made as to the potential for acceptable source testing conditions. These decisions were based on forecast information obtained from the local U.S. Weather Service office. A specific sampling location was identified based on the predicted wind direction. Sampling was not planned if there was a high probability of measurable precipitation.

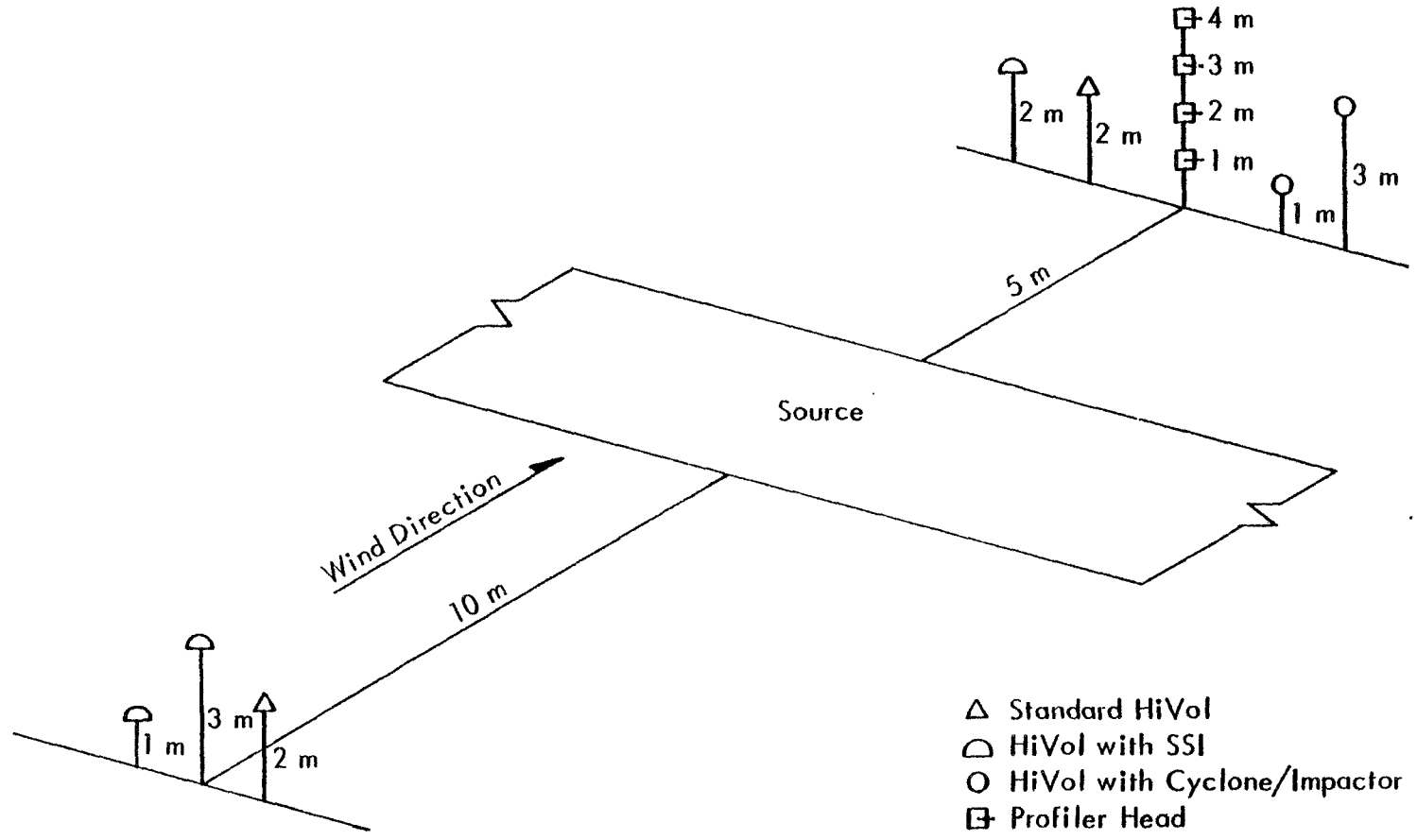

Figure 3-4. Equipment deployment for Runs F-27 through F-35.

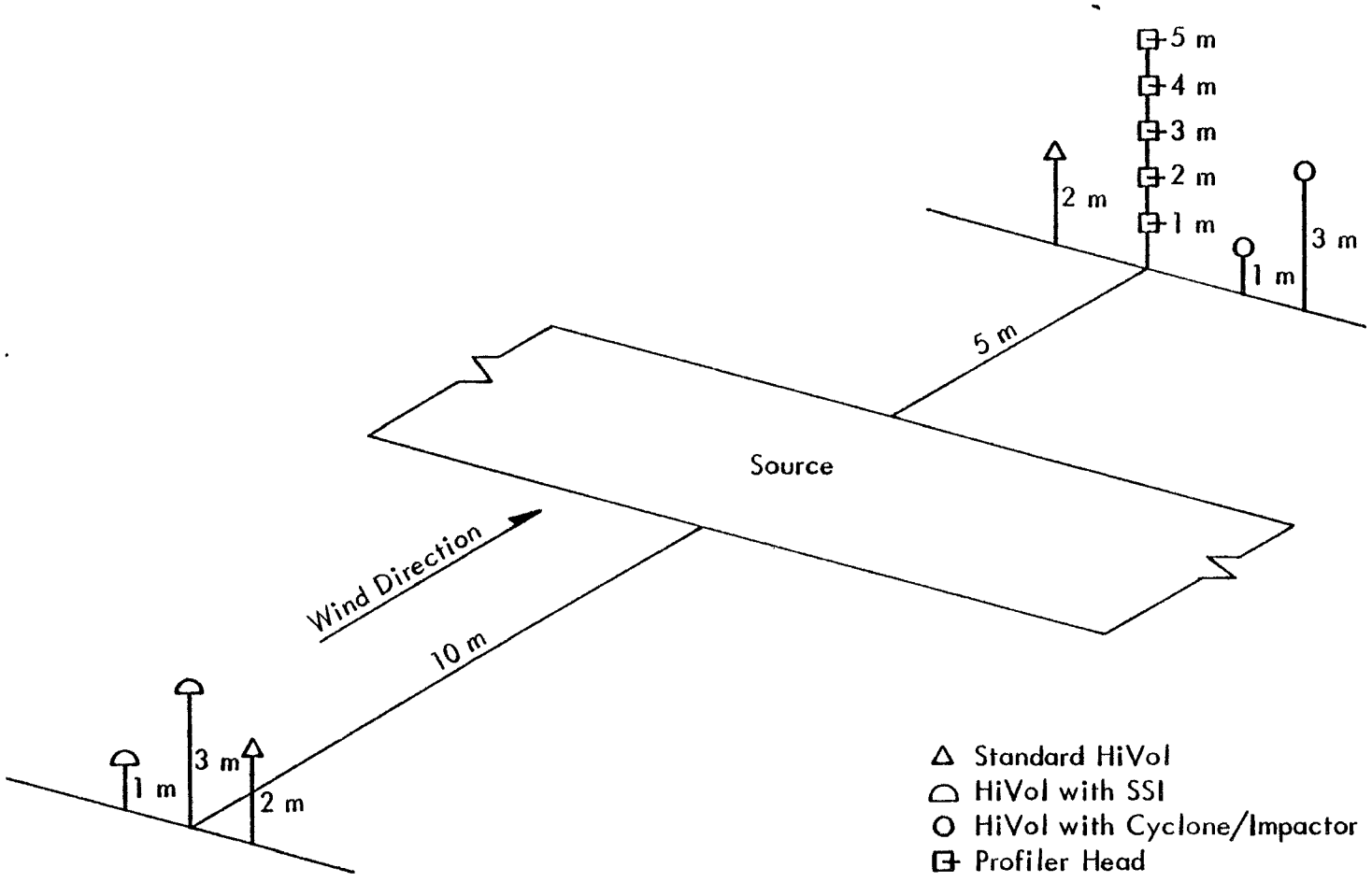

Figure 3-5. Equipment deployment for Runs F-36 through F-45 and F-58 through F-74.

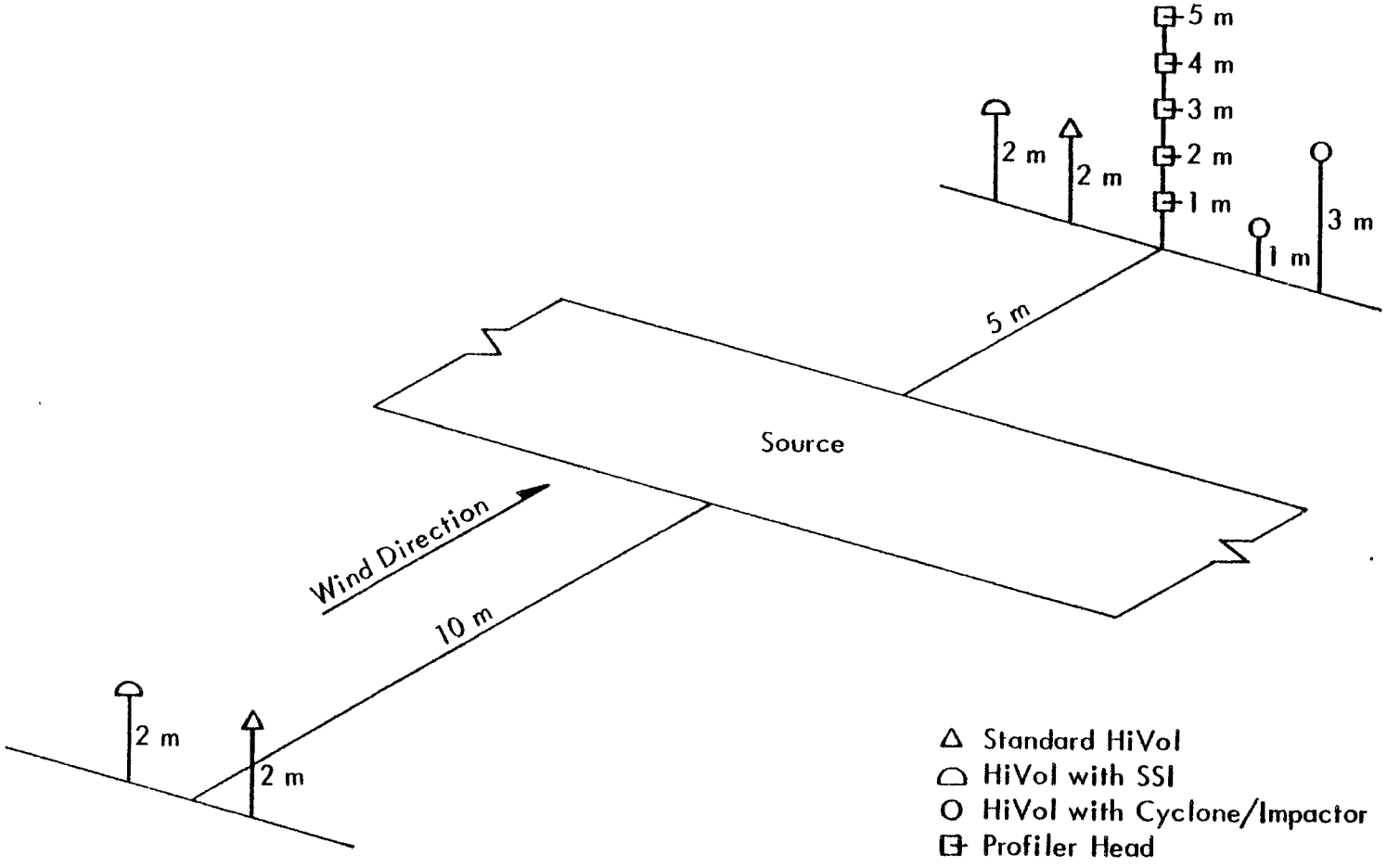

Figure 3-6. Equipment deployment for Runs B-50 through B-60.

TABLE 3-1. QUALITY CONTROL PROCEDURES FOR SAMPLING MEDIA

Activity	QC Check/Requirement
Preparation	Inspect and imprint glass fiber media with identification numbers.
Conditioning	Equilibrate media for 24 hr in clean controlled room with relative humidity of less than 50% (variation of less than ± 5%) and with temperature between 20 C and 25 C (variation of less than ± 3%).
Weighing	Weigh hi-vol filters and impactor substrates to nearest 0.1 mg.
Auditing of weights	Independently verify final weights of 10% of hi-vol filters and impactor substrates (at least four from each batch). Reweigh batch if weights of any hi-vol filters or impactor substrates deviate by more than ± 2.0 mg and ± 1.0 mg, respectively. For tare weights, follow the above procedures in a 100% audit. Reweigh batch if tare weight of any hi-vol filters or impactor substrates deviate by more than ± 1.0 mg, and ± 0.5 mg, respectively.
Correction for handling effects	Weigh and handle at least one blank for each 1 to 10 hi-vol filters or impactor substrates of each type for each test.
Calibration of balance	Balance to be calibrated once per year by certified manufacturer's representative. Check prior to each use with laboratory Class S weights.

If conditions were considered acceptable, the sampling equipment was transported to the site, and deployment was initiated. The deployment procedure normally took 1 to 2 hr to complete. During this time, the sampling flow rates were set for the various air sampling instruments. The quality control guidelines governing this activity are found in Table 3-2.

TABLE 3-2. QUALITY CONTROL PROCEDURES FOR SAMPLING FLOW RATES

Activity	QC Check/Requirement
Calibration	
· Profilers, hi-vols, and impactors	Calibrate flows in operating ranges using calibration orifice upon arrival and every 2 weeks thereafter at each regional site prior to testing.
Single-point checks	
· Profilers, hi-vols, and impactors	Check 25% of units with rotameter, calibration orifice, or electronic calibrator once at each site prior to testing (different units each time). If any flows deviate by more than 7%, check all other units of same type and recalibrate noncomplying units. (See alternative below.)
· Alternative	If flows cannot be checked at test site, check all units every 2 weeks and recalibrate units which deviate by more than 7%.
Orifice calibration	Calibrate against displaced volume test meter annually.

Once the source testing equipment was set up and the filters inserted, air sampling commenced. Information was recorded on specially designed reporting forms for quality assurance and included:

a. Exposure profiler - Start/stop times, wind speed profiles and sampler flow rates (15 min average), and wind direction relative to the roadway perpendicular (15 min average).

b. Other samplers - Start/stop times and flow rates.

c. Traffic count by vehicle type and speed.

d. General meteorology - Wind speed, wind direction, and temperature.

From the information in (a), adjustments could be made to insure isokinetic sampling of both profiler heads (by changing the intake velocity) and cyclone preseparators (by changing intake nozzles). Table 3-3 outlines the pertinent QC procedures.

TABLE 3-3. QUALITY CONTROL PROCEDURES FOR SAMPLING EQUIPMENT

Activity	QC Check/Requirements
Maintenance	
· All samplers	Check motors, gaskets, timers, and flow measuring devices at each regional site prior to testing.
Operation	
· Timing	Start and stop all samplers during time spans not exceeding 1 min.
· Isokinetic sampling (profilers only)	Adjust sampling intake orientation whenever mean (15 min average) wind direction changes by more than 30°.
	Adjust intake velocity whenever mean (15 min average) wind speed approaching sampler changes by more than 20%.
· Prevention of static mode deposition	Cap sampler inlets prior to and immediately after sampling.

Sampling time was long enough to provide sufficient particulate mass and to average over several units of cyclic fluctuation in the emission rate (e.g., vehicle passes on an unpaved road). Sampling lasted from 13 min to over 5 hr depending on the source and control measure (if any). Occasionally, sampling was interrupted due to occurrence of unacceptable meteorological conditions and then restarted when suitable conditions returned. Table 3-4 presents the criteria used for suspending or terminating a source test.

3.3.3 Sample Handling and Analysis

To prevent particulate losses, the exposed media were carefully transferred at the end of each run to protective containers within the MRI instrument van. In the field laboratory, exposed filters were placed in individual glassine envelopes and numbered file folders. Impactor substrates were replaced in the protective frames. Particulate that collected on the interior surfaces of exposure probes and cyclone preseparators was rinsed with distilled water into separate sample jars which were then capped and taped shut.

TABLE 3-4. CRITERIA FOR SUSPENDING OR TERMINATING AN EXPOSURE PROFILING TEST

A test may be suspended or terminated if:[a]

1. Rainfall ensues during equipment setup or when sampling is in progress.

2. Mean wind speed during sampling moves outside the 1.8 to 8.9 m/s (4 to 20 mph) acceptable range for more than 20% of the sampling time.

3. The angle between mean wind direction and the perpendicular to the path of the moving point source during sampling exceeds 45° for more than 20% of the sampling time.

4. Mean wind direction during sampling shifts by more than 30° from profiler intake direction.

5. Mean wind speed approaching profiler sampling intake is less than 80% or greater than 120% of intake speed.

6. Daylight is insufficient for safe equipment operation.

7. Source condition deviates from predetermined criteria (e.g., occurrence of truck spill).

[a] "Mean" denotes a 15-min average.

When exposed substrates and filters (and the associated blanks) were returned to the MRI laboratory, they were equilibrated under the same conditions as the initial weighing. After reweighing, 10% were audited to check weighing accuracy.

To determine the sample weight of particulate collected on the interior surfaces of samplers, the entire wash solution was passed through a 47 mm Buchner type funnel holding a glass fiber filter under suction. This water was passed through the Buchner funnel ensuring collection of all suspended material on the 47 mm filter which was then dried in an oven at 100°C for 24 hr. After drying, the filters were conditioned at constant temperature and humidity for 24 hr.

All wash filters were weighed with a 100% audit of tared and a 10% audit of exposed filters. Blank values were determined by washing "clean" (unexposed) settling chambers in the field and following the above procedures.

3.3.4 Emission Factor Calculation Procedures

To calculate emission rates using the exposure profiling technique, a conservation of mass approach was used. The passage of airborne particulate, i.e., the quantity of emissions per unit of source activity, is obtained by spatial integration of distributed measurements of exposure (mass/area) over the effective cross section of the plume. Exposure is the point value of the flux (mass/area-time) of airborne particulate integrated over the time of measurement. The steps in the calculation procedure are described below. Finally, the following definitions for particulate matter will be used in this report:

TP Total airborne particulate matter.

TSP Total suspended particulate matter, as measured by a standard high-volume (hi-vol) sampler.

IP Inhalable particulate matter consisting of particles smaller than 15 μm in aerodynamic diameter.

FP Fine particulate matter consisting of particles smaller than 2.5 μm in aerodynamic diameter.

3.3.4.1 Particulate Concentrations--

The concentration of particulate matter measured by a sampler is given by:

$$C = 10^3 \frac{m}{Qt}$$

where: C = particulate concentration ($\mu g/m^3$)
m = particulate sample weight (mg)
Q = sampler flow rate (m^3/min)
t = duration of sampling (min)

The specific particulate matter concentrations were determined from the various particulate catches as follows:

Size range	Particulate catches
TP	Profiler filter and intake catches or cyclone, impactor substrate, and backup filter catches
TSP	Hi-Vol filter catch
IP	SSI filter catch
FP	Impactor substrate and backup filter catches

To be consistent with the National Ambient Air Quality Standard for TSP, all concentrations and flow rates were expressed in standard conditions (25°C and 101 kPa or 77°F and 29.92 in Hg).

3.3.4.2 Isokinetic Flow Ratio--

The isokinetic flow ratio (IFR) is the ratio of a directional sampler's intake air speed to the mean wind speed approaching the sampler. It is given by:

$$IFR = \frac{Q}{aU}$$

where: Q = sampler flow rate (m^3/min)
a = intake area of sampler (m^2)
U = mean wind speed at height of sampler (m/min)

This ratio is of interest in the sampling of TP, since isokinetic sampling assures that particles of all sizes are sampled without bias. In this study, profilers and cyclone preseparators were the directional samplers used.

If it was necessary to sample at a superisokinetic flow rate (IFR > 1.0), to obtain sufficient sample under light wind conditions, the following multiplicative factors were used to correct measured exposures and concentrations to corresponding isokinetic values:

	Small particles (d < 5 μm)	Large particles (d > 50 μm)
Exposure Multiplier	1/IFR	1
Concentration Multiplier	1	IFR

A separate IFR is calculated for each profiler head based on the measured values of Q and U.

These correction factors for nonisokinetic TP concentrations are based on a theoretical relationship developed by Davies.[9] The relationship as applied to exposure profiling in the ambient atmosphere is as follows:

$$\frac{C_n}{C_t} = \frac{1}{IFR} - \frac{(1/IFR) - 1}{4Y + 1}$$

where

C_n = Nonisokinetic concentration of particles of diameter d

C_t = True concentration of particles of diameter d

Y = Inertial impaction parameter = d^2 c (p_p - p) U/18μ D

D = Diameter of probe

d = Diameter of particle

p = Density of air

μ = Viscosity of air

p_p = Density of particle

c = Cunningham correction factor

From Davies' equation, it is clear that, for very small d, $C_n = C_t$, and that, for large values of d, $C_n = C_t/IFR$. These observations lead to the simplified correction factors presented in the above table.

A more rigorous value for the average ratio ($\bar{R}$) of nonisokinetic to true concentration can be found by integrating the product of the particle size distribution and Davies' relationship over all possible particle diameters. An isokinetically corrected concentration can then be calculated as

$$C_t = C_n/\bar{R}$$

Using a log-normal distribution of particle diameters, the isokinetically corrected concentrations obtained by the $\bar{R}$-method and by MRI's simplified multiplicative correction factor method are within 20% of one another for IFR values between 0.2 and 1.5. Only 8% of the IFR values reported in this study lie outside of this range.

Using the simplified MRI approach for a particle-size distribution containing a mixture of small, intermediate, and large particles, the isokinetic correction factor is an average of the above factors weighted by the relative proportion of large and small particles. For example, if the mass of small particles in the distribution equals twice the mass of the large particles, the weighted isokinetic correction for exposure would be:

$$(1 + 2/IFR)/3$$

Because the particle-size distribution and the isokinetic corrections are interrelated, isokinetic corrections are of an iterative nature. In the present study, two iterations were employed.

3.3.4.3 Downwind Particle-Size Distributions--

Particle-size distributions were determined from a cascade impactor using the proper 50% cutoff diameters for the cyclone precollector and each impaction stage. These data were fitted to a log-normal mass size distribution after correction for particle bounce. The distributions obtained at two heights in the source plume were then used to determine the mass fractions corresponding to various particle-size ranges as a function of height. The IP and FP mass fractions were assumed to vary linearly with height.

The technique used in this study to correct for the effects of particle bounce has been discussed in earlier MRI studies.[1,2] Simultaneous cascade impactor measurements of airborne particle-size distribution with and without a cyclone precollector indicate that the cyclone precollector is somewhat effective in reducing fine particle measurement bias. However, even with the cyclone precollector, a monotonic decrease in collected particle weight on each successive impaction stage is frequently followed by a several-fold increase in weight collected on the back-up filter. But, because the assumed value (0.2 μm) for the effective cutoff diameter of the glass fiber back-up filter fits the progression of cutoff diameters for the impaction stages, the weight collected on the back-up filter should be consistent with the decreasing pattern shown by the weight collected on the impactor

stages. The excess particulate on the back-up filter is postulated to consist of coarse particles that penetrated the cyclone (with small probability) and bounced through the impactor. Although particle bounce is further reduced by greasing impaction substrates, it is not completely eliminated.

To correct the measured particle size distribution for the effects of residual particle bounce, the following procedure was used:

1. The calibrated cutoff diameter for the cyclone preseparator is used to fix the upper end of the particle-size distribution.

2. The lower end of the particle size distribution is fixed by the cutoff diameter of the last stage and the corrected mass fraction associated with this stage. The corrected fraction collected on the back-up filter is calculated as the average of the fractions measured on the two preceding stages.

Using the above procedure, mass is effectively removed from the back-up filter. However, because no clear procedure existed for apportioning the excess mass back onto the impaction stages, the size distribution determined from tests with particle bounce problems was constructed using the log-normal assumption and two points--the mass fraction collected in the cyclone and the corrected mass fraction collected on the back-up filter.

3.3.4.4 Particulate Exposures and Profile Integration--

For directional samplers operated isokinetically, total particulate exposures are calculated by:

$$E = 10^{-7} \times CUt$$

where: E = total particulate exposure (mg/cm^2)
C = net TP concentration ($\mu g/m^3$)
U = approaching wind speed (m/s)
t = duration of sampling (s)

The exposure values vary over the height of the plume. If exposure is integrated over the height of the plume, then the quantity obtained represents the total passage of airborne particulate matter due to the source per unit length of the line source. This quantity is called the integrated exposure A and is found by:

$$A = \int_0^H E \, dh$$

where: A = integrated exposure ($m\text{-}mg/cm^2$)
E = particulate exposure (mg/cm^2)
h = vertical distance coordinate (m)
H = effective extent of plume above ground (m)

The effective height of the plume is found by linear extrapolation of the uppermost net TP concentrations to a value of zero.

Because exposures are measured at discrete heights of the plume, a numerical integration is necessary to determine A. The exposure must equal zero at the vertical extremes of the profile, i.e., at the ground where the wind velocity equals zero and at the effective height of the plume where the net concentration equals zero. However, the maximum TP exposure usually occurs below a height of 1 m, so that there is a sharp decay in TP exposure near the ground. To account for this sharp decay, the value of exposure at the ground level is set equal to the value at a height of 1 m. The integration is then performed using Simpson's rule.

3.3.4.5 Particulate Emission Rates--

The emission rate for total airborne particulate generated by vehicular traffic on a straight road segment expressed in grams of emissions per vehicle-kilometer-traveled (VKT) is given by:

$$e = 10^4 \frac{A}{N}$$

where: e = total particulate emission rate (g/VKT)
A = integrated exposure (m-mg/cm^2)
N = number of vehicle passes (dimensionless)

3.3.4.6 Other Emission Factors--

Particulate emission factors for other size ranges are found in a manner analogous to that described above for TP. The concentrations corresponding to these size ranges are determined using the particle size distributions described earlier. A linear fit of the mass fractions measured at 1 m and 3 m is used to determine mass fractions at the other heights of the profile. Once net concentrations are determined, exposure values and emission factors are obtained in a manner identical to that for TP.

3.3.5 Control Efficiency Calculation Procedure

Because of meteorological conditions and logistical constraints, it was not always possible to run both controlled and uncontrolled tests at the same site in a plant. Furthermore, it was often necessary to determine normalized values in order to obtain meaningful comparisons even between tests at the same site. This was true simply because the vehicle mix on test roads varied from day to day. Therefore, the measured emission factor values had to be normalized in order that a change in vehicle mix was not mistakenly interpreted as a control efficiency for the technique being tested.

Thus, determination of the efficiency of a control measure required that the measured emission factors (from both controlled and uncontrolled tests) be scaled using mean vehicle characteristics at the very least. It

is important to realize that other variables which affect emission factors (such as silt content and surface loadings) are themselves affected by the control measures applied, while vehicle mix is not. Therefore no normalization for silt and surface loading was necessary when controlled and uncontrolled tests were conducted at the same site.

The methods used in this study to normalize measured emission factors are based on MRI's experimentally determined predictive emission factor equations for uncontrolled open dust sources. The equations for paved and unpaved roads are presented in Table 1-1. As can be seen from this table, the emission factors may be scaled by:

$$e_n = e_i\left(\frac{s_n}{s_i}\right)\left(\frac{L_n}{L_i}\right)\left(\frac{W_n}{W_i}\right)^{0.7}$$

for paved roads and

$$e_n = e_i\left(\frac{s_n}{s_i}\right)\left(\frac{S_n}{S_i}\right)\left(\frac{W_n}{W_i}\right)^{0.7}\left(\frac{w_n}{w_i}\right)^{0.5}$$

for unpaved roads where

e_n = normalized value of the emission factor corresponding to run i

e_i = measured emission factor from run i

s_n = normalizing value for silt content

s_i = silt content measured for run i

S_n = normalizing value for average vehicle speed

S_i = average vehicle speed during run i

L_n = normalizing value for surface loading

L_i = surface loading measured for run i

W_n = normalizing value for average vehicle weight

W_i = average vehicle weight during run i

w_n = normalizing value for average number of wheels per vehicle pass

w_i = average number of wheels per vehicle pass during run i

The control efficiency in percent (C) is found as

$$C = 1 - \frac{\bar{e}_c}{\bar{e}_u} \times 100\%$$

where $\bar{e}_c$ = geometric mean of normalized emission factors for controlled roads

$\bar{e}_u$ = geometric mean of normalized emission factors for uncontrolled roads

The normalization procedure varied depending on whether both uncontrolled and controlled tests at the same site were available. If replicates of both controlled and uncontrolled tests were available at one site, the normalization process for controlled and uncontrolled emission rates involved only the traffic parameters (average vehicle weight, average vehicle speed, average number of wheels per vehicle). If more than one controlled or uncontrolled test site had to be used, uncontrolled emission factors were normalized using the average values of both road surface and traffic parameters from all uncontrolled tests at the plant. The controlled emissions were also scaled to the mean traffic parameters for all uncontrolled tests at the plant. Because control measures affect the road surface characteristics, the above equations imply a emission reduction based on the average uncontrolled surface parameters at the plant.

3.4 AGGREGATE MATERIAL SAMPLING AND ANALYSIS

Samples of the road surface and storage pile aggregate materials were taken in the course of this study. These were analyzed for silt (those particles passing a 200 mesh screen) and moisture contents and to determine road surface loading values. These parameters are of importance in determining normalized emission rates as described earlier. Detailed steps for collection and analysis of samples for silt and moisture are given in a previous report.[4] An abbreviated discussion is presented below.

Paved roadway surface dust samples were removed from the travelled portion of the road by vacumming, preceded by broom sweeping if a heavy loading of aggregate was present. The samples were collected from the travelled portion of the road which was determined by observing the traffic and the road itself, noting that the portions of a roadway that were not travelled (e.g., curbs and center strips) usually exhibited a heavy loading of dust. The vacuum bags were equilibrated to the same constant temperature and humidity conditions as the air sampling filters before both tare and final weighings.

Unpaved roadway dust samples were collected by sweeping the loose layer of soil or crushed rock from the hardpan road base with a broom and dust pan. Sweeping was performed so that the road base was not abraided by the broom, and so that only the naturally occurring loose dust was collected. The sweeping was performed slowly so that dust was not entrained into the atmosphere.

Once the field sample was obtained, it was prepared for analysis. The field sample was split with a riffle to a sample size amenable to laboratory analysis. Laboratory analysis procedures to determine silt and moisture contents were then identical for all samples regardless of origin.

The basic procedure for moisture analysis is determination of weight loss on oven drying. Table 3-5 presents a step-by-step procedure for determining moisture content. Exceptions to this general procedure were made for any material composed of hydrated minerals or organic materials. Because of the danger of measuring chemically bound moisture for these materials if they are over-dried, the drying time was lowered to only 1-1/2 hr. Coal and soil are examples of materials that were analyzed by this latter procedure. Moisture analysis was performed in the field laboratory, normally on the same day as sample collection. In this fashion, the measured value was a more reliable estimate of the field conditions at the time of the test.

TABLE 3-5. MOISTURE ANALYSIS PROCEDURES

1. Preheat the oven to approximately 110°C (230°F). Record oven temperature.

2. Tare the laboratory sample containers which will be placed in the oven. Tare the containers with the lids on if they have lids. Record the tare weight(s). Check zero before weighing.

3. Record the make, capacity, smallest division, and accuracy of the scale.

4. Weigh the laboratory sample in the container(s). Record the combined weight(s). Check zero before weighing.

5. Place sample in oven and dry overnight.[a]

6. Remove sample container from oven and (a) weigh immediately if uncovered, being careful of the hot container; or (b) place tight-fitting lid on the container and let cool before weighing. Record the combined sample and container weight(s). Check zero before weighing.

7. Calculate the moisture as the initial weight of the sample and container minus the oven-dried weight of the sample and container divided by the initial weight of the sample alone. Record the value.

8. Calculate the sample weight to be used in the silt analysis as the oven-dried weight of the sample and container minus the weight of the container. Record the value.

a Dry materials composed of hydrated minerals or organic materials like coal and certain soils for only 1-1/2 hr. Because of this short drying time, material dried for only 1-1/2 hr must not be more than 2.5 cm (1 in.) deep in the container.

The basic procedure for silt analysis was mechanical, dry sieving. A step-by-step procedure is given in Table 3-6. The silt analysis was performed upon return to the main MRI laboratories.

3.5 RESULTS FOR VEHICULAR TRAFFIC ON UNPAVED ROADS

Nineteen tests of controlled and uncontrolled emissions from vehicular traffic on unpaved roads were performed. Table 3-7 presents the site parameters of the exposure profiling tests conducted on both unpaved and paved roads. Site parameters for paved roads will be discussed in Section 3.6. Ten tests were of heavy-duty traffic on both controlled and uncontrolled unpaved roads. Nine tests were of light-duty vehicular traffic on both controlled and uncontrolled unpaved roads. These sets of tests will be discussed separately. It should be noted that the test sites listed in Table 3-7 can be found in Figures 3-1 and 3-2.

3.5.1 Heavy-Duty Traffic

Three uncontrolled tests of fugitive dust emissions from heavy-duty vehicular traffic on unpaved roads were performed. Two control measures for unpaved roads were evaluated--(1) a 17% solution of Coherex® in water applied at an intensity of 0.86 ℓ/m^2 (0.19 gal/yd^2) and (2) water applied at an intensity of 0.59 ℓ/m^2 (0.13 gal/yd^2). These control measures were applied by plant personnel.

Table 3-8 lists, for each run, the individual point values of isokinetically corrected exposure (net mass per sampling intake area) within the open dust source plume as measured by the exposure profiling equipment. These point values were integrated over the height of the plume to determine emission factors.

Table 3-9 compares particulate concentrations measured by the upwind hi-vol and by three types of downwind samplers (exposure profiling head, standard hi-vol, and high-volume cascade impactor) located 5 m from the test road and near the vertical center of the plume at a height of 2 m above ground. For the profiler concentrations, both nonisokinetic and isokinetic values are given.

Table 3-10 summarizes the particle sizing data for the tests of heavy-duty traffic on unpaved roads. Particle size is expressed in terms of aerodynamic diameter.

Table 3-11 gives the wind speed and intake velocity used to calculate the isokinetic ratios for each run. These values in conjunction with the previous table, were used to determine isokinetically corrected concentrations and exposures according to the procedure described in Section 3.3.4.2.

Table 3-12 presents the isokinetic emission factors for total, inhalable and fine particulate. Also indicated in this table are vehicle and site parameters which have been found to have a significant effect on the emission rates from uncontrolled unpaved roads.

TABLE 3-6. SILT ANALYSIS PROCEDURES

1. Select the appropriate 8-in. diameter, 2-in. deep sieve sizes. Recommended U.S. Standard Series sizes are: 3/8-in., No. 4, No. 20, No. 40, No. 100, No. 140, No. 200, and a pan. Comparable Tyler Series sizes can also be utilized. The No. 20 and the No. 200 are mandatory. The others can be varied if the recommended sieves are not available or if buildup on one particular sieve during sieving indicates that an intermediate sieve should be inserted.

2. Obtain a mechanical sieving device such as a vibratory shaker or a Roto-Tap (without the tapping function).

3. Clean the sieves with compressed air and/or a soft brush. Material lodged in the sieve openings or adhering to the sides of the sieve should be removed (if possible) without handling the screen roughly.

4. Attain a scale (capacity of at least 1,600 g) and record make, capacity, smallest division, date of last calibration, and accuracy.

5. Tare sieves and pan. Check the zero before every weighing. Record weights.

6. After nesting the sieves in decreasing order with pan at the bottom, dump dried laboratory sample (probably immediately after moisture analysis) into the top sieve. The sample should weigh between 800 and 1600 g (1.8 and 3.5 lb).[a] Brush fine material adhering to the sides of the container into the top sieve and cover the top sieve with a special lid normally purchased with the pan.

7. Place nested sieves into the mechanical device and sieve for 10 min. Remove pan containing minus No. 200 and weigh. Replace pan beneath the sieves and sieve for another 10 min. Remove pan and weigh. When the difference between two successive pan sample weighings (where the tare of the pan has been subtracted) is less than 3.0%, the sieving is complete. Do not sieve longer than 40 min.

8. Weigh each sieve and its contents and record the weight. Check the zero before every weighing.

9. Collect the laboratory sample and place the sample in a separate container if further analysis is expected.

10. Calculate the percent of mass less than the 200 mesh screen (75 μm). This is the silt content.

[a] This amount will vary for finer textured materials; 100 to 300 grams may be sufficient when 90 percent of the sample passes a No. 8 (2.36 mm) sieve.

TABLE 3-7. EXPOSURE PROFILING TEST SITE PARAMETERS

Site	Source	Control measure[a]	Run	Date	Test start	Sampling duration (min)	No. of vehicle passes	Ambient air temperature (°C)	Ambient air temperature (°F)	Mean wind speed[b] (m/s)	Mean wind speed[b] (mph)
A	Paved road	N	F-34	07/17/80	10:20	62	79	32	90	1.9	4.2
A	Paved road	N	F-35	07/17/80	11:46	127	130	32	90	3.4	7.5
A	Paved road	VS	F-36	10/14/80	11:00	335	263	10	50	2.6	5.9
A	Paved road	VS	F-37	10/15/80	9:24	241	199	10	50	2.1	4.8
A	Paved road	VS	F-38	10/16/80	9:49	127	141	10	50	2.0	4.5
A	Paved road	VS	F-39	10/16/80	12:10	215	190	10	50	2.9	6.4
B	Light-duty unpaved road	N	F-28	07/12/80	10:55	45	101	26	78	0.72	1.6
B	Light-duty unpaved road	N	F-29	07/13/80	10:12	34	50	26	79	2.8	6.2
B	Light-duty unpaved road	N	F-30	07/13/80	11:17	17	50	26	79	2.8	6.2
B	Light-duty unpaved road	N	F-31	07/13/80	13:17	40	33	27	80	1.6	3.5
B	Light-duty unpaved road	C	F-40	10/18/80	14:38	133	300	10	50	1.8	4.0
B	Light-duty unpaved road	C	F-41	10/18/80	17:22	100	255	10	50	2.3	5.1
B	Light-duty unpaved road	C	F-42	10/19/80	10:39	128	294	10	50	3.1	7.0
B	Light-duty unpaved road	C	F-43	10/19/80	14:36	120	300	10	50	3.8	8.5
B	Light-duty unpaved road	C	F-44	10/19/80	17:09	55	200	10	50	4.1	9.1
C	Heavy-duty unpaved road	C	F-59	11/03/80	11:45	125	61	9.9	50	4.2	9.3
C	Heavy-duty unpaved road	C	F-60	11/03/80	14:32	123	84	9.9	50	3.7	8.2
C	Heavy-duty unpaved road	C	F-63	11/05/80	10:05	107	118	9.9	50	2.3	5.2
C	Heavy-duty unpaved road	C	F-64	11/05/80	13:18	121	136	9.9	50	2.9	6.5
D	Paved road	N	F-61	11/04/80	11:56	108	93	4.4	40	4.9	11
D	Paved road	N	F-62	11/04/80	13:58	77	94	7.2	45	5.4	12
D	Paved road	WF	F-74	11/21/80	9:58	205	67	9.9	50	4.0	9.0
E	Heavy-duty unpaved road	W	F-65	11/06/80	9:18	57	64	16	60	2.9	6.4
E	Heavy-duty unpaved road	W	F-66	11/06/80	10:33	20	41	16	60	2.5	5.5
E	Heavy-duty unpaved road	W	F-67	11/06/80	13:36	17	30	13	55	4.2	9.5
E	Heavy-duty unpaved road	N	F-68	11/06/80	14:30	17	21	9.9	50	3.3	7.4
E	Heavy-duty unpaved road	N	F-69	11/06/80	15:30	13	14	9.9	50	3.5	7.9
E	Heavy-duty unpaved road	N	F-70	11/06/80	16:26	13	10	9.9	50	3.7	8.2
F	Paved road	N	F-27	07/08/80	14:19	91	158	38	100	4.2	9.5
F	Paved road	N	F-45	10/20/80	12:06	135	172	10	50	1.8	4.0

TABLE 3-7. (concluded)

Site	Source	Control measure[a]	Run	Date	Test start	Sampling duration (min)	No. of vehicle passes	Ambient air temperature (°C)	Ambient air temperature (°F)	Mean wind speed[b] (m/s)	Mean wind speed[b] (mph)
J	Paved road	N	F-41	07/15/80	11:10	259	301	32	90	2.6	5.8
K	Paved road	FBS	B-52	06/25/81	10:22	60	119	32	90	1.3[c]	3.0[c]
L	Paved road	FBS	B-50	06/24/81	10:12	104	123	32	90	2.5[c]	5.7[c]
L	Paved road	FBS	B-51	06/24/81	12:15	93	127	32	90	1.9[c]	4.2[c]
L	Paved road	WF	B-54	06/29/81	10:35	101	118	32	90	2.4[c]	5.4[c]
L	Paved road	WF	B-55	06/29/80	13:29	82	98	32	90	3.8[c]	8.6[c]
L	Paved road	WF	B-56	06/30/81	10:35	61	118	32	90	2.8[c]	6.3[c]
L	Paved road	N	B-58	07/09/81	15:51	96	67	32	90	3.0[c]	6.6[c]
M	Paved road	FBS	B-53	06/26/81	12:45	81	72	32	90	2.4[c]	5.3[c]
M	Paved road	N	B-57	07/01/81	13:09	101	68	32	90	1.6[c]	3.6[c]
M	Paved road	N	B-59	07/10/81	11:55	114	67	32	90	2.7[c]	6.1[c]
M	Paved road	N	B-60	07/10/81	14:05	112	50	32	90	2.2[c]	5.0[c]

[a] The control measures are:
N = uncontrolled
VS = vacuum sweeping
C = Coherex
WF = water flushing
W = watering
FBS = water flushing and broom sweeping

[b] Arithmetic average of 1 m and 3 m values, unless otherwise noted.

[c] Average of 2 m and 4 m values.

TABLE 3-8. PLUME SAMPLING DATA FOR HEAVY-DUTY VEHICLES ON UNPAVED ROADS

Site	Control measure	Run	Sampling height (m)	Sampling rate (m^3/hr)	Sampling rate (cfm)	Net TP exposure[a] (mg/cm^2)
C	Coherex	F-59	1	24	14	2.09
			2	37	22	2.02
			3	42	25	2.38
			4	49	29	2.00
			5	52	30	0.00
C	Coherex	F-60	1	37	22	2.44
			2	49	29	1.83
			3	50	29	1.34
			4	54	32	1.16
			5	70	41	0.00
C	Coherex	F-63	1	14	8	2.58
			2	20	12	3.09
			3	24	14	2.62
			4	27	16	2.31
			5	31	18	1.64
C	Coherex	F-64	1	21	12	9.20
			2	32	19	5.57
			3	33	20	4.23
			4	38	22	2.84
			5	41	24	2.64
E	Watering	F-65	1	15	9	3.83
			2	25	14	2.73
			3	26	15	2.74
			4	32	18	2.37
			5	35	20	1.11
E	Watering	F-66	1	15	9	8.70
			2	26	15	8.14
			3	26	16	6.06
			4	31	18	4.71
			5	32	19	2.25
E	Watering	F-67	1	20	12	17.8
			2	24	14	19.0
			3	27	16	17.4
			4	31	18	12.7
			5	34	20	6.92

TABLE 3-8 (concluded)

Site	Control measure	Run	Sampling height (m)	Sampling rate (m^3/hr)	Sampling rate (cfm)	Net TP exposure[a] (mg/cm^2)
E	None	F-68	1	24	14	12.0
			2	32	19	15.3
			3	34	20	14.6
			4	37	22	12.7
			5	41	24	9.6
E	None	F-69	1	27	16	10.7
			2	29	17	10.5
			3	29	17	10.8
			4	29	17	6.82
			5	29	17	4.44
E	None	F-70	1	34	20	8.60
			2	38	23	7.52
			3	42	25	6.00
			4	43	25	5.76
			5	23	14	3.63

[a] Isokinetically corrected.

TABLE 3-9. PARTICULATE CONCENTRATION MEASUREMENTS FOR HEAVY-DUTY TRAFFIC ON UNPAVED ROADS

Site	Control measure	Run	Particulate concentration ($\mu g/m^3$) at 2 m above ground				
			Upwind background	Downwind			
				Profiler		Cascade impactor[a]	Standard hi-vol
				Nonisokinetic	Isokinetic		
C	Coherex	F-59	550	768	719	846	412
C	Coherex	F-60	550	620	706	806	848
C	Coherex	F-63	65	2,280	2,160	2,040	N/A
C	Coherex	F-64	65	2,320	2,620	2,420	2,280
E	Watering	F-65	206	3,240	2,840	3,660	2,060
E	Watering	F-66	206	25,000	25,900	26,900	18,700
E	Watering	F-67	280	65,000	43,200	43,700	45,600
E	None	F-68	280	43,500	43,500	38,600	27,800
E	None	F-69	280	42,700	36,900	38,000	29,600
E	None	F-70	280	22,800	25,600	34,300	19,100

[a] Interpolated from 1 m and 3 m concentrations.

TABLE 3-10. AERODYNAMIC PARTICLE SIZE DATA - HEAVY-DUTY TRAFFIC ON UNPAVED ROADS

Site	Control measure	Run	Mass median diameter (μm)[a]		% < 50 μm[a]		% < 15 μm		% < 5 μm		% < 2.5 μm	
			Ht=1m	Ht=3m	Ht=1m	Ht=3m	Ht=1m	Ht=3m	Ht=1m	Ht=3m	Ht=1m	Ht=3m
C	Coherex	F-59	57	57	46	46	27	27	14	14	8	8
C	Coherex	F-60	65	6.7	45	84	23	65	10	44	5	31
C	Coherex	F-63	60	39	47	56	26	30	12	13	6	7
C	Coherex	F-64	70	54	44	49	23	28	10	14	6	8
E	Watering	F-65	> 100	> 100	24	26	11	13	4	6	2	3
E	Watering	F-66	> 100	> 100	31	33	15	16	6	7	3	4
E	Watering	F-67	42	74	53	42	29	21	13	8	7	4
E	None	F-68	55	> 100	48	28	26	13	12	6	6	3
E	None	F-69	> 100	80	28	40	18	21	12	9	9	5
E	None	F-70	77	53	41	49	22	28	10	14	5	8

[a] These values are based on a large log-normal extrapolation of measured data.

TABLE 3-11. ISOKINETIC CORRECTION PARAMETERS FOR HEAVY-DUTY TRAFFIC ON UNPAVED ROADS

Site	Control measure	Run	Wind speed Ht = 1m (cm/s)	Wind speed Ht = 1m (fpm)	Wind speed Ht = 3m (cm/s)	Wind speed Ht = 3m (fpm)	Intake velocity Ht = 1m (cm/s)	Intake velocity Ht = 1m (fpm)	Intake velocity Ht = 3m (cm/s)	Intake velocity Ht = 3m (fpm)	Measured isokinetic ratio Ht=1m	Measured isokinetic ratio Ht=3m
C	Coherex	F-59	338	665	494	972	260	512	454	894	0.770	0.920
C	Coherex	F-60	306	603	430	847	392	772	529	1,040	1.28	1.23
C	Coherex	F-63	199	392	266	524	153	302	256	503	0.770	0.960
C	Coherex	F-64	248	489	330	650	221	435	360	709	0.890	1.09
E	Watering	F-65	212	417	358	704	163	321	275	542	0.770	0.770
E	Watering	F-66	216	426	274	540	163	320	282	556	0.751	1.03
E	Watering	F-67	394	776	456	898	217	427	292	575	0.550	0.640
E	None	F-68	268	528	392	772	255	502	365	718	0.951	0.930
E	None	F-69	291	572	416	818	291	572	307	605	1.00	0.740
E	None	F-70	353	695	396	779	371	730	491	966	1.05	1.24

TABLE 3-12. VEHICULAR TRAFFIC DATA AND EMISSION FACTORS FOR HEAVY-DUTY TRAFFIC ON UNPAVED ROADS

Site	Control measure	Run	Silt (%)	Mean vehicle speed (kph)	Mean vehicle speed (mph)	Mean vehicle weight (tonnes)	Mean vehicle weight (tons)	Mean No. of wheels per vehicle pass	Emission factors TP (kg/VKT)	Emission factors TP (lb/VMT)	Emission factors IP (kg/VKT)	Emission factors IP (lb/VMT)	Emission factors FP (kg/VKT)	Emission factors FP (lb/VMT)
C	Coherex	F-59	5.4[a]	26	16	17	19	9.3	1.51	5.34	0.406	1.44	0.121	0.428
C	Coherex	F-60	5.4[a]	35	22	42	46	9.2	1.01	3.35	0.392	1.39	0.168	0.594
C	Coherex	F-63	2.5	29	18	49.	54	7.7	1.19	4.41	0.327	1.18	0.0773	0.274
C	Coherex	F-64	-	24	15	49	54	7.8	2.30	8.17	0.575	2.04	0.150	0.531
E	Watering	F-65	4.5	32	20	48	53	10	2.33	8.27	0.280	0.992	0.0618	0.219
E	Watering	F-66	-	40	25	49	54	9.0	8.29	29.4	1.33	4.70	0.290	1.03
E	Watering	F-67	5.1	40	25	49	54	9.8	28.0	99.3	7.28	25.8	1.54	5.46
E	None	F-68	14	32	20	20	29	5.9	36.4	129	9.45	33.5	2.18	7.74
E	None	F-69	-	32	20	48	53	10	37.5	133	7.50	25.9	2.49	8.84
E	None	F-70	16[b]	32	20	48	53	10	36.9	133	9.25	32.9	2.40	8.52

[a] Same sample.
[b] Average of more than one sample.

In order to determine control efficiencies, it was necessary to determine normalized TP, IP, and FP emission factors, as discussed in Section 3.3.5. The range, geometric mean and geometric standard deviation of the normalized emission factors are given in Table 3-13. Following the procedure described in Section 3.3.5, control efficiencies were found and are presented in Table 3-14.

Watering of unpaved roads showed a noticeable decay in control efficiency. In Figure 3-7, control efficiency is plotted as a function of time after application. As seen in this figure, watering has a high initial control efficiency in all size ranges, but the effects are short-lived.

The result of the four tests of Coherex® are incorporated into one average control efficiency in this table. This is because no trend of efficiency decay was noticed during these tests. Quite possibly, this is due to the fact that precipitation (over 0.1 in.) fell between the first and second test days. Nevertheless, tests F-63 and F-64 indicated evidence of control efficiency decay as shown below:

Run	Control efficiency (%)		
	TP	IP	FP
F-63	96.9	96.4%	96.9
F-64	93.1	92.6	92.9

Thus, there is reason to believe that a decay in control efficiency would also have been observed under more favorable meteorological conditions.

3.5.2 Light-Duty Traffic

Five tests of fugitive emissions from captive, light-duty traffic on controlled unpaved roads were performed. The control measure was a 17% solution of Coherex® in water applied at an intensity 0.86 ℓ/m^2 (0.19 gal/ yd^2). Four uncontrolled tests were performed at the same site in order to determine the efficiency of the control. The captive vehicles traveling on the road were mid-sized rental cars driven by MRI personnel.

Table 3-15 lists, for each run, the individual point values of isokinetically corrected exposure (net mass per sampling intake area) within the fugitive dust plume as measured by the exposure profiling equipment. These point values were integrated over the height of the plume to determine emission factors.

Table 3-16 compares particulate concentrations measured by the upwind hi-vol and by three types of downwind samplers (exposure profiling head, standard hi-vol, and high-volume cascade impactor) located 5 m from the test road and near the vertical center of the plume at a height of 2 m above ground. For the profiler concentrations, both nonisokinetic and isokinetic values are given.

TABLE 3-13. NORMALIZED EMISSION FACTORS FOR HEAVY-DUTY TRAFFIC ON UNPAVED ROADS

		Normalized[a] Emission Factors (kg/VKT)								
		TP			IP			FP		
Control Measure	No. of Tests	Range	Geometric mean	Geometric standard deviation	Range	Geometric mean	Geometric standard deviation	Range	Geometric mean	Geometric standard deviation
None	3	33.6-78.4	44.5	1.63	6.54-20.4	10.3	1.82	2.15-4.71	2.83	1.56
Coherex	4	0.886-3.58	1.92	1.94	0.367-0.968	0.564	1.64	0.0866-0.288	0.167	1.66
Watering	3	2.09-20.0	6.37	3.09	0.250-5.19	1.09	4.57	0.0553-1.10	0.236	4.47

[a] Normalizing values are:

Silt content = 10.4%
Vehicle speed = 32 kph (20 mph)
Vehicle weight = 55 tonnes (50 tons)
Number of wheels = 9

TABLE 3-14. CONTROL EFFICIENCIES FOR HEAVY-DUTY TRAFFIC ON UNPAVED ROADS

Control	Application intensity	Time after Application (hr)	Time after Rainfall[a] (days)	Control efficiency (%)		
				TP	IP	FP
Coherex®	0.86 ℓ/m² (0.19 gal/yd²) of 17% solution	0-48[b]	2-6[c]	95.7	94.5	94.1
Watering	0.59 ℓ/m² (0.13 gal/yd²)	0.48[d]	3	95.3	97.6	98.0
Watering	0.59 ℓ/m² (0.13 gal/yd²)	1.4[d]	3	86.1	90.4	92.3
Watering	0.59 ℓ/m² (0.13 gal/yd²)	4.4[d]	3	55.0	49.6	61.1

[a] 0.1 inch or more.

[b] No trend of decay noticed over this time.

[c] The first two tests were run 6 days after rainfall, and the second pair 2 days after rainfall.

[d] At the midpoint of the test.

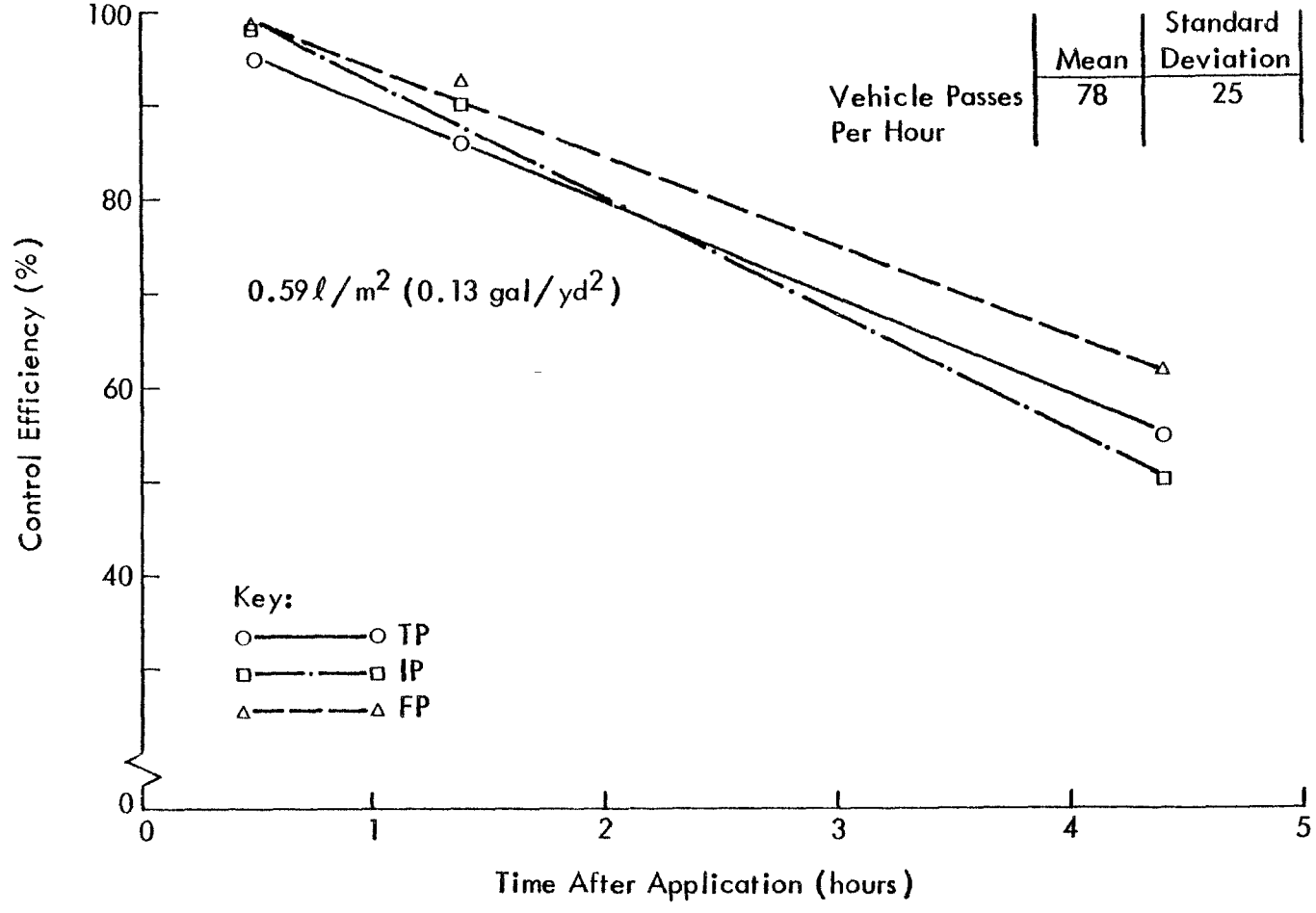

Figure 3-7. Decay in control efficiency of watering on unpaved road under heavy-duty traffic.

TABLE 3-15. PLUME SAMPLING DATA FOR LIGHT-DUTY TRAFFIC ON UNPAVED ROADS

Site	Control measure	Run	Sampling height (m)	Sampling rate (m^3/hr)	Sampling rate (cfm)	Net TP exposure[a] (mg/cm^2)
B	None	F-28	1	12	7	3.52
			2	12	7	3.58
			3	15	9	1.66
			4	15	9	0.770
B	None	F-29	1	14	8	5.20
			2	19	11	4.74
			3	24	14	3.56
			4	25	14	2.67
B	None	F-30	1	12	7	4.20
			2	12	7	3.77
			3	17	10	2.76
			4	17	10	1.29
B	None	F-31	1	12	7	3.01
			2	12	7	3.13
			3	17	10	1.81
			4	17	10	0.92
B	Coherex	F-40	1	22	13	0.205
			2	23	14	0.166
			3	24	14	0.0595
			4	25	14	0.0658
			5	25	15	0.0263
B	Coherex	F-41	1	16	10	1.73
			2	23	14	0.929
			3	25	15	0.480
			4	28	16	0.310
			5	30	18	0.222
B	Coherex	F-42	1	17	10	3.69
			2	27	16	2.06
			3	31	18	1.10
			4	36	21	0.632
			5	40	24	0.507
B	Coherex	F-43	1	29	17	4.63
			2	39	23	2.22
			3	45	27	0.71
			4	54	32	0.11
			5	60	35	0.00

TABLE 3-15. (Concluded)

Site	Control measure	Run	Sampling height (m)	Sampling rate (m^3/hr)	Sampling rate (cfm)	Net TP exposure[a] (mg/cm^2)
B	Coherex	F-44	1	25	15	3.24
			2	38	22	0.83
			3	44	26	0.84
			4	50	29	0.17
			5	53	31	0.00

[a] Isokinetically corrected.

TABLE 3-16. PARTICULATE CONCENTRATION MEASUREMENTS FOR LIGHT-DUTY TRAFFIC ON UNPAVED ROADS

Site	Control measure	Run	Particulate concentration ($\mu g/m^3$) at 2 m above ground				
			Upwind background	Downwind			
				Profiler		Cascade impactor[a]	Standard hi-vol
				Nonisokinetic	Isokinetic		
B	None	F-28	161	20,100	38,000	16,000	14,200
B	None	F-29	32	10,700	8,220	16,400	4,710
B	None	F-30	32	26,400	20,500	22,000	13,300
B	None	F-31	49	9,500	8,880	6,830	5,690
B	Coherex	F-40	91	204	204	294	217
B	Coherex	F-41	74	662	662	807	575
B	Coherex	F-42	111	1,020	971	1,450	535
B	Coherex	F-43	111	831	870	1,260	770
B	Coherex	F-44	111	735	735	2,560	1,290

[a] Interpolated from 1 m and 3 m concentrations

Table 3-17 summarizes the particle sizing data for the tests of light-duty traffic on unpaved roads. Particle size is expressed in terms of aerodynamic diameter.

Table 3-18 gives the wind speed and intake velocity used to calculate the isokinetic ratios for each run. These values, in conjunction with the previous table, were used to determine isokinetically corrected concentrations and exposures.

Table 3-19 presents the isokinetic emission factors for total particulate, inhalable particulate, and fine particulate. Also indicated in this table are vehicle and site parameters which have been found to have a significant effect on the emission rates from uncontrolled unpaved roads.

In order to determine control efficiencies, it was necessary to determine normalized TP, IP, and FP emission factors, as discussed earlier. The range, geometric mean and geometric standard deviation of the normalized emission factors are given in Table 3-20. Following the procedure described earlier in this section, the control efficiency of Coherex® on light-duty unpaved roads as a function of time was found and is presented in Table 3-21.

In contrast to the results for heavy-duty traffic on unpaved roads, these tests show evidence of control efficiency decay for Coherex®, as shown in Figure 3-8. The TP, IP and FP control efficiencies all tended toward 90% during the short time over which results were available. Finally, Figure 3-9 plots the control efficiency of Coherex® as a function of vehicle passes after application.

3.6 RESULTS FOR VEHICULAR TRAFFIC ON PAVED ROADS

As shown in Table 3-7, 23 tests of open dust emissions from vehicular traffic on paved roads in integrated iron and steel plants were performed. Of these, 12 were tests of controlled roads. The control measures tested were: (a) vacuum sweeping, (b) water flushing, and (c) flushing with broom sweeping. All tests (except those of vacuum sweeping) began immediately after the application of the control and lasted between 1 and 5-1/2 hr. The remaining 11 tests were of uncontrolled paved roads in order to determine the efficiency of each control.

3.6.1 Emission Factors

Table 3-22 lists the individual point values of isokinetically corrected exposure (net mass per sampling intake area) within the dust plume as measured by the exposure profiling equipment.

Table 3-23 compares particulate concentrations measured by the upwind hi-vol and by three types of downwind samplers (exposure profiling head, standard hi-vol, and high-volume cascade impactor) located 5 m from the test road and near the vertical center of the plume at a height of 2 m above ground. For the profiler concentrations, both nonisokinetic and isokinetic values are given.

TABLE 3-17. AERODYNAMIC PARTICLE SIZE DATA - LIGHT-DUTY TRAFFIC ON UNPAVED ROADS

Site	Control measure	Run	Mass median diameter (μm)[a]		% < 50 μm[a]		% < 15 μm		% < 5 μm		% < 2.5 μm	
			Ht=1m	Ht=3m	Ht=1m	Ht=3m	Ht=1m	Ht=3m	Ht=1m	Ht=3m	Ht=1m	Ht=3m
B	None	F-28	> 100	> 100	17	29	8	14	3	6	2	4
B	None	F-29[b]	-	-	-	-	-	-	-	-	-	-
B	None	F-30	49	47	51	52	29	31	15	16	8	10
B	None	F-31	58	14	48	77	26	51	13	27	7	13
B	Coherex	F-40	64	1.4	96	~ 100	76	~ 100	41	99	20	85
B	Coherex	F-41	> 100	18	30	71	16	46	8	25	4	14
B	Coherex	F-42	> 100	20	26	72	16	43	9	19	6	9
B	Coherex	F-43	72	26	44	69	24	34	12	10	7	4
B	Coherex	F-44[c]	-	-	-	-	-	-	-	-	-	-

[a] These values are based on a large log-normal extrapolation of measured data.
[b] Size distribution of F-30 used.
[c] Insufficient substrate loadings, F-43 data used.

TABLE 3-18. ISOKINETIC CORRECTION PARAMETERS FOR LIGHT-DUTY TRAFFIC ON UNPAVED ROADS

Site	Control measure	Run	Wind speed Ht = 1m (cm/s)	Wind speed Ht = 1m (fpm)	Wind speed Ht = 3m (cm/s)	Wind speed Ht = 3m (fpm)	Intake velocity Ht = 1m (cm/s)	Intake velocity Ht = 1m (fpm)	Intake velocity Ht = 3m (cm/s)	Intake velocity Ht = 3m (fpm)	Measured isokinetic ratio Ht=1m	Measured isokinetic ratio Ht=3m
B	None	F-28	44	86	79	156	128	252	174	342	2.93	2.19
B	None	F-29	233	459	313	617	144	285	254	500	0.621	0.810
B	None	F-30	143	282	201	396	128	251	181	356	0.890	0.899
B	None	F-31	107	211	163	321	126	249	183	360	1.18	1.12
B	Coherex	F-40	148	291	207	408	256	503	294	579	1.73	1.42
B	Coherex	F-41	172	339	263	517	186	366	281	553	1.08	1.07
B	Coherex	F-42	233	458	358	705	184	362	323	635	0.790	0.901
B	Coherex	F-43	328	646	434	855	305	601	482	949	0.930	1.10
B	Coherex	F-44	323	635	439	865	268	527	470	926	0.830	1.07

TABLE 3-19. VEHICULAR TRAFFIC DATA AND EMISSION FACTORS FOR LIGHT-DUTY TRAFFIC[a] ON UNPAVED ROADS

Site	Control measure	Run	Silt (%)	Mean vehicle speed (kph)	Mean vehicle speed (mph)	Mean vehicle weight (tonnes)	Mean vehicle weight (tons)	Mean No. of wheels per vehicle pass	Emission factors TP (kg/VKT)	Emission factors TP (lb/VMT)	Emission factors IP (kg/VKT)	Emission factors IP (lb/VMT)	Emission factors FP (kg/VKT)	Emission factors FP (lb/VMT)
B	None	F-28	-	24	15	2.7	3	4	3.02	10.7	0.296	1.05	0.0691	0.245
B	None	F-29	-	24	15	2.7	3	4	4.00	14.2	1.20	4.25	0.358	1.27
B	None	F-30	-	24	15	2.7	3	4	2.81	9.98	0.843	2.99	0.253	0.898
B	None	F-31	-	24	15	2.7	3	4	3.50	12.4	1.10	3.90	0.288	1.02
B	Coherex	F-40	0.015	40	25	2.7	3	4	0.0252	0.0894	0.0172	0.0610	0.00897	0.0318
B	Coherex	F-41	0.075	40	25	2.7	3	4	0.185	0.657	0.0533	0.189	0.0165	0.0584
B	Coherex	F-42	0.99	40	25	2.7	3	4	0.333	1.18	0.104	0.368	0.0266	0.0945
B	Coherex	F-43	-	40	25	2.7	3	4	0.344	1.22	0.102	0.363	0.0205	0.0726
B	Coherex	F-44	1.8	40	25	2.7	3	4	0.347	1.23	0.108	0.383	0.0216	0.0766

[a] Captive traffic.

TABLE 3-20. NORMALIZED EMISSION FACTORS FOR LIGHT-DUTY TRAFFIC ON UNPAVED ROADS

Control Measure	No. of Tests	Normalized[a] Emission Factors (g/VKT)								
		TP			IP			FP		
		Range	Geometric mean	Geometric standard deviation	Range	Geometric mean	Geometric standard deviation	Range	Geometric mean	Geometric standard deviation
None	4	2820-4010	3300	1.17	296-1200	756	1.90	69.1-358	206	2.10
Coherex	5	15.1-208	108	3.09	10.3-64.9	38.4	2.20	5.39-16.0	10.6	1.52

[a] Normalized to vehicle speed of 24 kph (15 mph)

TABLE 3-21. CONTROL EFFICIENCIES OF COHEREX FOR LIGHT-DUTY TRAFFIC ON UNPAVED ROADS

Control	Application intensity	Time after Application (hr)	Time after Rainfall[a] (days)	Control efficiency (%)		
				TP	IP	FP
Coherex	0.86 ℓ/m^2 (0.19 gal/yd^2) of 17% solution	25	16	99.5	98.6	97.4
Coherex	0.86 ℓ/m^2 (0.19 gal/yd^2) of 17% solution	28	16	96.6	95.8	95.2
Coherex	0.86 ℓ/m^2 (0.19 gal/yd^2) of 17% solution	45	1	94.0	91.8	92.2
Coherex	0.86 ℓ/m^2 (0.19 gal/yd^2) of 17% solution	49	1	93.7	91.9	94.0
Coherex	0.86 ℓ/m^2 (0.19 gal/yd^2) of 17% solution	51	1	93.7	91.4	93.7

[a] 0.1 inch or more.

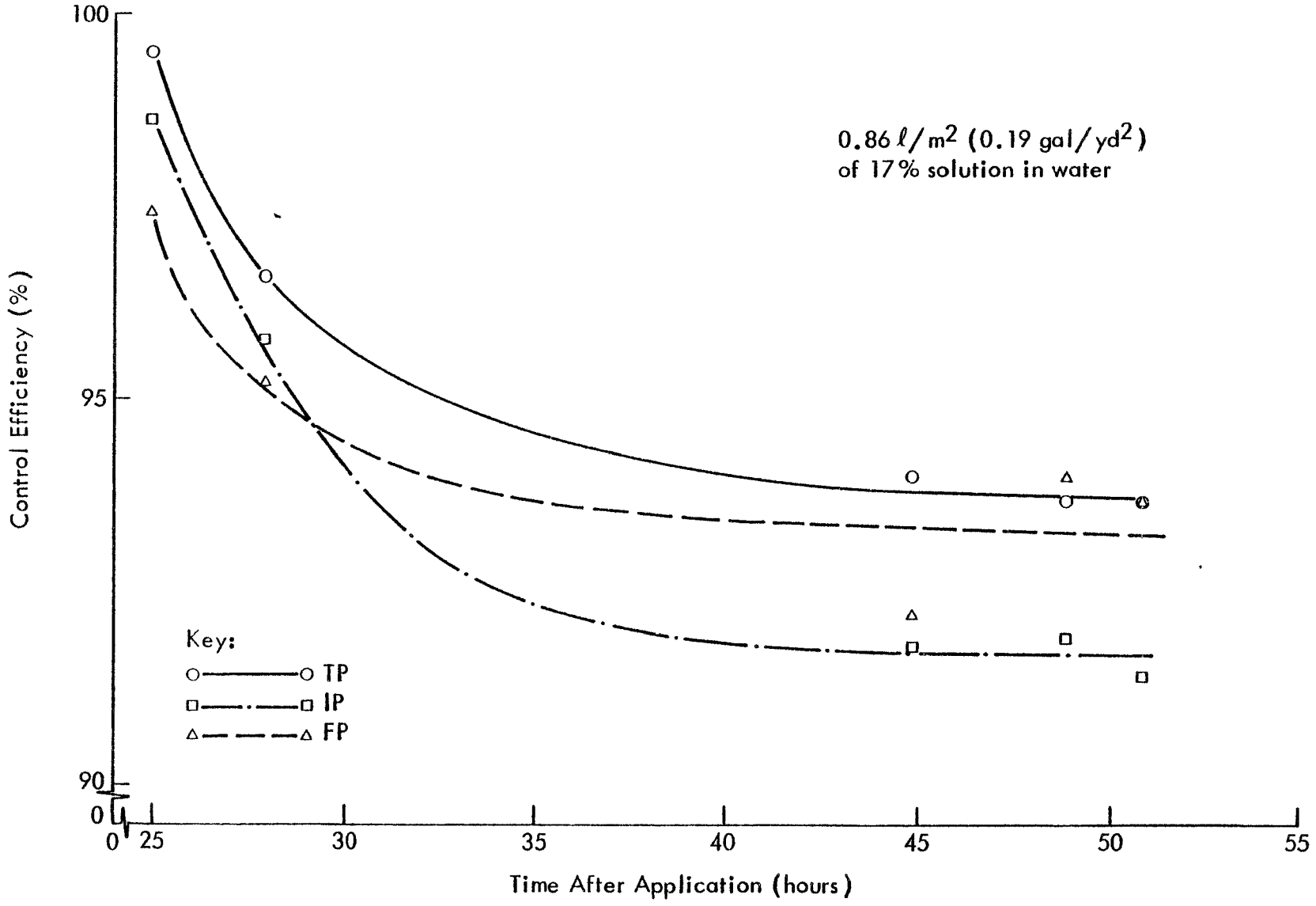

Figure 3-8. Decay in control efficiency of Coherex applied to a light-duty unpaved road as a function of time.

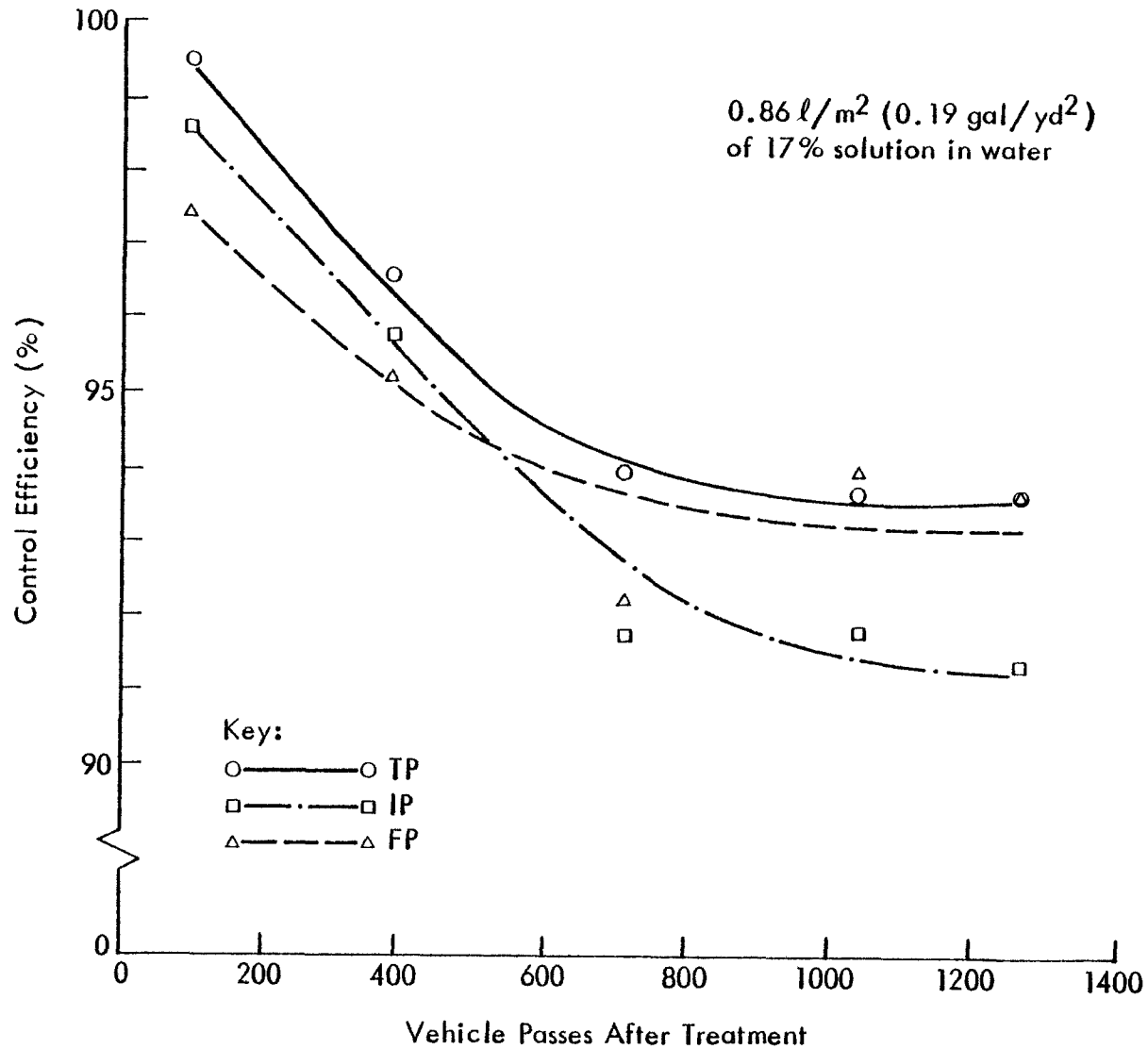

Figure 3-9. Decay in control efficiency of Coherex applied to a light-duty unpaved road as a function of vehicular passes.

TABLE 3-22. PLUME SAMPLING DATA FOR PAVED ROADS

Site	Control measure	Run	Sampling height (m)	Sampling rate (m^3/hr)	Sampling rate (cfm)	Net TP exposure[a] (mg/cm^2)
A	None	F-34	1	12	7	1.24
			2	12	7	0.82
			3	17	10	0.66
			4	17	10	0.42
A	None	F-35	1	21	12	3.18
			2	28	17	2.02
			3	37	22	1.12
			4	36	21	0.00
A	Vac. sweep.	F-36	1	21	13	0.406
			2	26	15	0.420
			3	31	18	0.254
			4	33	19	0.116
			5	35	21	0.192
A	Vac. sweep.	F-37	1	15	9	1.04
			2	21	12	0.592
			3	25	15	0.435
			4	28	17	0.340
			5	30	18	0.303
A	Vac. sweep.	F-38	1	15	9	0.748
			2	24	14	0.562
			3	27	16	0.330
			4	31	18	0.351
			5	34	20	0.267
A	Vac. sweep.	F-39	1	23	14	1.14
			2	30	18	0.985
			3	33	20	0.844
			4	38	22	0.738
			5	38	22	0.825
D	None	F-61	1	31	18	2.95
			2	42	24	2.60
			3	45	27	1.97
			4	54	32	1.66
			5	56	33	0.987
D	None	F-62	1	35	20	2.66
			2	45	27	2.58
			3	51	30	2.07
			4	60	35	1.29
			5	62	36	0.00

TABLE 3-22 (continued)

Site	Control measure	Run	Sampling height (m)	Sampling rate (m^3/hr)	Sampling rate (cfm)	Net TP exposure[a] (mg/cm^2)
D	Water Flush.	F-74	1	36	21	1.65
			2	40	24	1.55
			3	44	26	0.799
			4	47	28	1.00
			5	50	29	1.13
F	None	F-27	1	20	12	1.14
			2	30	18	0.94
			3	40	24	0.66
			4	41	24	0.00
F	None	F-45	1	15	9	3.44
			2	20	12	2.50
			3	23	14	2.01
			4	25	15	1.41
			5	28	16	1.45
J	None	F-32	1	15	9	0.683
			2	24	14	0.523
			3	28	16	0.385
			4	29	17	0.346
K	Flushing and broom sweeping	B-52	1	15	9	0.404
			2	24	14	0.221
			3	26	15	0.248
			4	19	11	0.144
			5	35	21	0.187
L	Flushing and broom sweeping	B-50	1	16	9	0.820
			2	26	15	0.922
			3	29	17	0.695
			4	22	13	0.623
			5	35	21	0.00
L	Flushing and broom sweeping	B-51	1	15	9	1.60
			2	25	15	1.46
			3	28	17	1.10
			4	21	13	0.477
			5	35	20	0.606

TABLE 3-22 (continued)

Site	Control measure	Run	Sampling height (m)	Sampling rate (m^3/hr)	Sampling rate (cfm)	Net TP exposure[a] (mg/cm^2)
L	Flushing	B-54	1	15	9	1.21
			2	24	14	0.682
			3	26	15	0.592
			4	19	11	0.145
			5	35	21	0.183
L	Flushing	B-55	1	17	10	1.28
			2	26	15	1.00
			3	29	17	0.601
			4	21	12	0.514
			5	39	23	0.257
L	Flushing	B-56	1	18	10	0.549
			2	27	16	0.420
			3	30	18	0.282
			4	22	13	0.186
			5	35	21	0.179
L	None	B-58	1	15	9	2.00
			2	24	14	0.569
			3	27	16	0.805
			4	21	12	0.431
			5	36	21	0.300
M	Flushing and broom sweeping	B-53	1	15	9	0.661
			2	24	14	0.462
			3	27	16	0.240
			4	20	12	0.0547
			5	35	20	0.00
M	None	B-57	1	15	9	1.18
			2	24	14	1.39
			3	26	15	1.09
			4	19	11	0.605
			5	32	19	0.439
M	None	B-59	1	15	9	1.93
			2	24	14	0.597
			3	26	15	0.887
			4	23	14	0.433
			5	40	24	0.379

TABLE 3-22 (concluded)

Site	Control measure	Run	Sampling height (m)	Sampling rate (m^3/hr)	Sampling rate (cfm)	Net TP exposure[a] (mg/cm^2)
M	None	B-60	1	20	12	1.34
			2	26	15	1.51
			3	26	15	0.803
			4	19	11	0.603
			5	30	18	0.430

[a] Isokinetically corrected.

TABLE 3-23. PARTICULATE CONCENTRATION MEASUREMENTS FOR PAVED ROADS

			Particulate concentration ($\mu g/m^3$) at 2 m above ground				
				Downwind			
				Profiler			
Site	Control measure	Run	Upwind background	Nonisokinetic	Isokinetic	Cascade impactor[a]	Standard hi-vol
A	None	F-34	732	2,540	1,840	1,880	801
A	None	F-35	1,080	1,660	1,520	1,790	945
A	Vacuum sweeping	F-36	168	243	243	398	212
A	Vacuum sweeping	F-37	247	441	466	411	331
A	Vacuum sweeping	F-38	162	512	549	568	453
A	Vacuum sweeping	F-39	64	310	322	372	328
D	None	F-61	189	1,090	1,090	1,580	961
D	None	F-62	189	1,090	1,090	1,240	973
D	Water Flushing	F-74	166	454	454	300	399
F	None	F-27	886	1,180	1,180	1,110	894
F	None	F-45	161	1,580	1,860	1,030	1,180
J	None	F-32	144	286	276	232	177
K	Flushing and broom sweeping	B-52	184	339	683	190	402
L	Flushing and broom sweeping	B-50	226	644	804	407	661
L	Flushing and broom sweeping	B-51	226	1,130	1,640	1,080	N/A
L	Water Flushing	B-54	250	678	780	537	689
L	Water Flushing	B-55	250	959	843	752	599
L	Water Flushing	B-56	197	593	654	488	522
L	None	B-58	161	551	514	750	1,080
M	Flushing and broom sweeping	B-53	340	676	769	410	627
M	None	B-57	277	1,106	1,990	619	951
M	None	B-59	140	452	451	736	797
M	None	B-60	140	1,050	1,210	769	620

a Interpolated from 1 m and 3 m concentrations.

Table 3-24 summarizes the particle sizing data for the tests of vehicular traffic on paved roads. Particle size is expressed in terms of aerodynamic diameter.

Table 3-25 gives the wind speed and intake velocity used to calculate the isokinetic ratios for each run. These values, in conjunction with the previous table, were used to determine isokinetically corrected concentrations and exposures according to the procedure described earlier.

Table 3-26 presents the isokinetic emission factors for total particulate, inhalable particulate, and fine particulate. Also indicated in this table are vehicle and site parameters which have been found to have a significant effect on the emission rates from uncontrolled paved roads.

3.6.2 Control Efficiencies

In order to determine control efficiencies, it was necessary to determine normalized TP, IP, and FP emission factors, as discussed earlier. The range, geometric mean and geometric standard deviation of the normalized emission factors are given in Table 3-27. Following the procedure described earlier in this section, efficiencies of the different control measures were found and are presented in Table 3-28. Note that two tests were omitted in the determination of control efficiencies. Run F-74 was the only test of water flushing at Plant F; because no replicates were available, these results were not incorporated in an efficiency of control. Furthermore, because only one test (F-32) was performed at site J and no reliable silt content was available for this site, F-32 was omitted.

The results for vacuum sweeping of paved roads suggest that, initially, the control efficiency decreases with decreasing particle size. The efficiency in all size ranges decays with time. In some cases, negligible IP and FP control efficiencies were found.

The other two control measures, water flushing and flushing and broom sweeping, appear to be equally effective in all size ranges considered. Flushing and broom sweeping is more effective than flushing alone, although the additional benefit is less pronounced for fine particulate emissions. This is believed to be a valid statement despite the differences in time after rainfall because both controls involve wetting the surface.

3.7 COMPARISON OF PREDICTED AND ACTUAL UNCONTROLLED EMISSIONS

During the course of this field testing program, 18 tests of vehicular traffic on uncontrolled roads were performed. Eleven of these tests were conducted on paved roads and the remainder on unpaved roads. In addition to providing baseline emission data for control efficiency determination, these tests expanded the data bases used in forming the MRI predictive emission factor equations in Table 1-1.[2]

Although the purpose of this study was the measurement of control efficiency, the uncontrolled tests were included in the data base to determine how well the MRI equations predict measured emission levels. This is of particular interest because MRI is currently in the process of refining the

TABLE 3-24. AERODYNAMIC PARTICLE SIZE DATA - PAVED ROADS

Site	Control measure	Run	Mass median diameter (μm)[a]		% < 50 μm[a]		% < 15 μm		% < 5 μm		% < 2.5 μm	
			Ht = 1m	Ht = 3m	Ht = 1m	Ht = 3m	Ht = 1m	Ht = 3m	Ht = 1m	Ht = 3m	Ht = 1m	Ht = 3m
A	None	F-34	45	42	52	54	30	32	14	15	8	9
A	None	F-35	27	23	64	68	38	40	18	19	10	10
A	Vacuum sweeping	F-36	18	8	74	98	46	69	22	36	12	19
A	Vacuum sweeping	F-37	18	85	74	42	46	26	22	16	12	10
A	Vacuum sweeping	F-38	35	7	57	90	35	70	18	42	11	25
A	Vacuum sweeping	F-39	18	10	73	85	45	59	21	31	11	17
D	None	F-61	55	47	48	56	25	32	11	15	6	8
D	None	F-62	60	50	46	50	25	28	11	14	6	8
D	Water flushing	F-74	> 100	100	25	44	18	33	13	24	10	20
F	None	F-27	30	12	60	79	36	55	18	31	10	18
F	None	F-45	> 100	65	34	45	16	26	6	13	3	8
J	None	F-32	20	13	67	78	45	54	25	31	16	18
K	Flushing and broom sweeping	B-52	> 100	> 100	26	30	12	20	5	12	3	9
L	Flushing and broom sweeping	B-50	> 100	> 100	38	30	29	24	14	14	8	10
L	Flushing and broom sweeping	B-51	65	38	44	55	20	29	7	11	2	4
L	Water flushing	B-54	> 100	29	27	63	16	32	9	15	6	8
L	Water flushing	B-55	30	19	64	77	30	43	9	16	2	4
L	Water flushing	B-56	40	18	55	78	27	44	10	16	5	6
L	None	B-58	29	20	64	72	33	42	12	18	5	9
M	Flushing and broom sweeping	B-53	> 100	> 100	26	30	17	22	10	16	7	13
M	None	B-57	> 100	100	33	39	15	21	6	10	3	6
M	None	B-59	40	33	54	56	29	36	13	24	6	16
M	None	B-60	57	56	47	48	26	31	13	18	8	12

[a] These values are based on a large log-normal extrapolation of measured data.

TABLE 3-25. ISOKINETIC CORRECTION PARAMETERS FOR PAVED ROADS

Site	Control measure	Run	Wind speed Ht = 1m (cm/s)	Wind speed Ht = 1m (fpm)	Wind speed Ht = 3m (cm/s)	Wind speed Ht = 3m (fpm)	Intake velocity Ht = 1m (cm/s)	Intake velocity Ht = 1m (fpm)	Intake velocity Ht = 3m (cm/s)	Intake velocity Ht = 3m (fpm)	Measured isokinetic ratio Ht=1m	Measured isokinetic ratio Ht=3m
A	None	F-34	157	310	221	435	128	251	181	357	0.815	0.819
A	None	F-35	292	574	383	754	221	436	395	777	0.757	1.03
A	Vac. sweep.	F-36	211	416	313	617	232	458	332	654	1.10	1.06
A	Vac. sweep.	F-37	733	262	218	429	164	322	268	528	1.23	1.23
A	Vac. sweep.	F-38	165	324	205	404	163	321	292	574	0.989	1.42
A	Vac. sweep.	F-39	253	498	322	633	250	493	370	728	0.988	1.15
D	None	F-61	434	855	528	1,040	339	667	484	952	0.781	0.917
D	None	F-62	474	933	610	1,200	374	737	549	1,080	0.789	0.900
D	Water flushing	F-74	354	696	454	894	393	773	482	948	1.11	1.06
F	None	F-27	313	617	538	1,060	270	531	549	1,080	0.863	1.02
F	None	F-45	148	291	210	414	164	323	273	538	1.11	1.30
J	None	F-32	221	436	301	592	162	318	295	580	0.733	0.980
K	Flushing & broom sweep.	B-52	102	201	137	270	177	348	291	572	1.74	2.12
L	Flushing & broom sweep.	B-50	184	362	262	516	193	380	346	681	1.05	1.32
L	Flushing & broom sweep.	B-51	182	358	184	363	173	340	337	664	0.951	1.83
L	Water flushing	B-54	149	294	249	491	166	326	279	550	1.11	1 12
L	Water flushing	B-55	266	523	389	766	194	382	311	613	0.729	0.799
L	Water flushing	B-56	209	411	284	558	207	407	323	636	0.990	1.14
L	None	B-58	248	488	299	588	166	327	286	564	0.669	0 957
M	Flushing & broom sweep.	B-53	157	309	245	483	168	331	295	580	1.07	1.20
M	None	B-57	76	150	167	329	166	326	279	549	2.18	1.67
M	None	B-59	216	425	275	541	209	412	280	552	0.968	1.02
M	None	B-60	181	357	228	448	165	325	277	546	0.912	1.21

TABLE 3-26. ROAD SURFACE CHARACTERISTICS AND EMISSION FACTORS FOR PAVED ROADS

Site	Control measure	Run	Lane characteristics No.	Width (m)	Width (ft)	Silt (%)	Loading (kg/km)	Loading (lb/mi)	Mean vehicle weight (tonnes)	Mean vehicle weight (tons)	TP (kg/VKT)	TP (lb/VMT)	FP (kg/VKT)	FP (lb/VMT)
A	None	F-34	2	2.59	8.5	16	90.0	319	25	28	0.488	0.536	0.0414	0.147
A	None	F-35	2	2.59	8.5	10.4	101	358	23	25	0.615	0.849	0.0584	0.207
A	Vacuum sweeping	F-36	2	3.72	12.2[a]	18.3	8.21	29.1	7.5	8.3	0.0685	0.147	0.0111	0.0394
A	Vacuum sweeping	F-37	2	3.11	10.2[a]	26.4	9.84	34.9	15	17	0.181	0.209	0.0175	0.0621
A	Vacuum sweeping	F-38	2	4.02	13.2	27.9	6.26[a]	22.2[a]	16	18	0.203	0.430	0.0437	0.155
A	Vacuum sweeping	F-39	2	3.11	10.2	19.6	14.0	49.8	16	18	0.327	0.686	0.0572	0.203
D	None	F-61	2	4.72	15.5	21.0	804	2,850	36	40	1.31	1.35	0.0922	0.327
D	None	F-62	2	4.72	15.5	20.3	671	2,380	33	36	0.987	0.929	0.0691	0.245
D	Water flushing	F-74	2	4.72	15.5	9.45[a]	558[a]	1,980[a]	26	29	1.17	1.32	0.225	0.797
F	None	F-27	2	3.81	12.5	35.7	316	1,120	13	14	0.239	0.357	0.0299	0.106
F	None	F-45	2	3.81	12.5	28.4	137	487	15	16	0.776	0.608	0.0488	0.173
J	None	O-32	2	3.35	111.0	13.4	5.84	20.7	13	14	0.0823	0.144	0.0142	0.0503
K	Flushing and broom sweeping	B-52	2	3.29	10.8	34.3	138	489	11	12	0.144	0.0946	0.0117	0.0416
L	Flushing and broom sweeping	B-50	2	3.75	12.3	28.2[b]	361	1,280	8.5	9.4	0.271	0.230	0.0299	0.106
L	Flushing and broom sweeping	B-51	2	3.75	12.3	28.2[b]	361	1,280	10	11	0.510	0.435	0.0204	0.0725
L	Water flushing	B-54	2	3.75	12.3	22.6	125	444	9.1	10	0.305	0.268	0.0197	0.0700
L	Water flushing	B-55	2	-	-	19.6[a]	244[a]	866[a]	10	11	0.437	0.575	0.0213	0.0755
L	Water flushing	B-56	2	4.02	13.2	11.2	172	611	8.3	9.2	0.288	0.398	0.0169	0.0599
L	None	B-58	2	-	-	17.9	440	1,560	16	18	0.818	1.08	0.0556	0.197
M	Flushing and broom sweeping	B-53	2	-	-	9.94	-	-	18	20	0.246	0.161	0.0216	0.0766
M	None	B-57	2	3.72	12.2	6.45[a]	268	949	11	12	0.806	0.554	0.0417	0.148
M	None	B-59	2	4.18	13.7	14.0[a]	123	435	10	11	0.832	0.993	0.0942	0.334
M	None	B-60	2	4.11	13.5	13.5	194	688	11	12	1.05	1.18	0.122	0.432

[a] Average of two or more values.

[b] Sample used for more than one run.

TABLE 3-27. NORMALIZED EMISSION FACTORS FOR VEHICULAR TRAFFIC ON PAVED ROADS

Control Measure	Plant	No. of Tests	Normalized[a] Emission Factors (g/VKT) TP Range	TP Geometric mean	TP Geometric standard deviation	IP Range	IP Geometric mean	IP Geometric standard deviation	FP Range	FP Geometric mean	FP Geometric standard deviation
None	O	6	159-2930	959	3.40	66.9-1140	221	3.59	19.6-278	53.8	3.19
None	B	4	234-1540	880	2.44	86.9-516	260	2.18	15.8-174	72.4	2.95
Vacuum Sweeping	O	4	148-412	246	1.52	77.3-244	126	1.70	23.0-72.2	38.5	1.79
Water Flushing	B	3	367-491	404	1.18	90.8-182	133	1.42	21.5-24.0	23.1	1.06
Flushing and Broom Sweeping	B	4	152-573	270	1.83	28.2-138	57.1	2.12	12.4-37.5	20.4	1.62

[a] The normalizing values are:

	Plant F	Plant B
Silt Content x Surface Loading	350 kg/km (100 lb/mile)	350 kg/km (100 lb/mile)
Mean Vehicle Weight	24 tonnes (22 tons)	14 tonnes (13 tons)

TABLE 3-28. CONTROL EFFICIENCIES FOR PAVED ROADS

Control	Application frequency	Application intensity	Time after application (hr)	Time after rainfall[a] (days)	Control efficiency (%) TP	IP	FP
Vacuum sweeping[b]	Every 2 days	340 m^3/min (12,000 cfm) vacuum blower capacity	2.8	12	69.8	50.9	49.2
			24.4	13	51.8	57.7	51.4
			2.1	14	47.8	16.3	c
			4.1	14	16.1	c	c
Water Flushing	Once per 3 days	2.2 ℓ/m^2 (0.48 gal/yd^2)	0.68[d]	3.3[d]	54.1	48.8	68.1
Flushing and broom sweeping	Once per 3 days	2.2 ℓ/m^2 (0.48 gal/yd^2)	0.70[d]	1.3[d]	69.3	78.0	71.8

[a] 0.1 inch or more.
[b] Control efficiencies based on same-site testing.
[c] No reduction in emissions observed.
[d] Average of three tests.

predictive equations by including recent test results from a variety of roads (industrial paved and unpaved, urban paved, and rural unpaved). This work is supported under EPA Contract No. 68-02-3158.

The results of the comparison of predicted and measured emissions are presented in Tables 3-29 and 3-30 for unpaved and paved roads, respectively. The first entries in each table comprise the data base in Reference 2, while the tests performed in this study begin with F-28 and F-27, respectively. It should be noted that F-32 is excluded from the data base for paved roads for the same reasons given in Section 3.6.2, namely, the lack of replicates and unreliable silt content and surface loading values.

The precision factors (two standard deviations) associated with the predictive equations are shown in the following table:

	Precision factor as a Function of Data Base	
	Reference 2	Reference 2 and Present Study
Unpaved Roads	1.48	1.98
Paved Roads	2.20	3.95

The fact that the precision factors increase when predicting measurements in the larger data base illustrates the need for possible refinement of MRI's predictive equations. As mentioned earlier, this process is underway.

TABLE 3-29. PREDICTED VERSUS ACTUAL EMISSIONS (UNPAVED ROADS)

Run	Silt (%)	Average vehicle speed (km/hr)	Average vehicle speed (mph)	Average vehicle weight (tonnes)	Average vehicle weight (tons)	Average No. of vehicle wheels	Emission factor[a] Predicted[b] (kg/VKT)	Emission factor[a] Predicted[b] (lb/VMT)	Emission factor[a] Actual (kg/VKT)	Emission factor[a] Actual (lb/VMT)	Predicted ÷ actual
R-1	12	48	30	3	3	4.0	1.7	5.9	1.7	6.0	0.98
R-2	13	48	30	3	3	4.0	1.8	6.4	1.9	6.8	0.94
R-3	13	64	40	3	3	4.0	2.4	8.5	2.2	7.9	1.08
R-8	20	48	30	3	3	4.5	2.9	10.4	2.3	8.1	1.29
R-10	5	64	40	3	3	4.0	0.93	3.3	1.1	3.9	0.85
R-13	68	48	30	3	3	4.0	9.3	33.0	9.0	32.0	1.03
A-14	4.8	48	30	64	70	4.0	6.0	21.4	6.0	21.5	1.00
A-15	4.8	48	30	64	70	4.0	6.0	21.4	6.5	23.0	0.93
E-1	8.7	23	14	31	34	9.4	4.7	16.7	3.8	13.6	1.23
E-2	8.7	26	16	31	34	8.3	5.1	18.0	3.4	12.2	1.47
E-3	8.7	26	16	21	23	6.4	3.4	12.0	4.1	14.5	0.83
F-21	9.0	24	15	3	3	4.0	0.62	2.2	0.84	3.0	0.73
F-22	9.0	24	15	3	3	4.0	0.62	2.2	0.48	1.7	1.29
F-23	9.0	24	15	4	4	4.1	0.76	2.7	0.65	2.3	1.19
G-27	5.3	35	22	15	17	11.0	3.0	10.7	3.4	12.0	0.89
G-28	5.3	37	23	11	12	9.5	2.3	8.1	2.0	7.2	1.13
G-29	5.3	39	24	8	9	7.8	1.8	6.3	1.6	5.6	1.12
G-30	4.3	40	25	13	14	8.5	2.1	7.5	2.4	8.7	0.87
G-31	4.3	47	29	7	8	6.2	1.4	6.1	1.4	5.1	0.99
G-32	4.3	35	22	27	30	13.0	3.9	14.0	4.5	16.0	0.88
I-3	4.7	24	15	61	67	6.0	3.5	12.4	4.1	14.5	0.86
I-5	4.7	24	15	142	157	6.0	6.4	22.6	7.0	25.0	0.90
F-28	10[c]	24	15	3	3	4.0	0.71	2.5	0.62	2.2	1.14
F-29	10[c]	24	15	3	3	4.0	0.71	2.5	2.0	7.3	0.34
F-30	10[c]	24	15	3	3	4.0	0.71	2.5	1.4	5.1	0.49
F-31	10[c]	24	15	3	3	4.0	0.71	2.5	1.8	6.4	0.39
F-68	14	32	20	20	29	5.9	8.3	29.6	14.5	51.3	0.58
F-69	15[c]	32	20	48	53	10.0	16.4	58.0	13.5	48.0	1.21
F-70	16	32	20	48	53	10.0	17.5	61.9	17.4	61.7	1.00

[a] Particles smaller than 30 μm in Stokes diameter, based on actual density of silt particles.
[b] Based on revised MRI emission factor equation in Table 1-1.
[c] Estimated value.

TABLE 3-30. PREDICTED VERSUS ACTUAL EMISSIONS (PAVED ROADS)

Run	Type	Road surface dust: Loading excluding curbs[a] (kg/km)	Road surface dust: Loading excluding curbs[a] (lb/mile)	No. of traffic lanes	Silt (%)	I (industrial) multiplier)	Average vehicle weight (tonnes)	Average vehicle weight (tons)	Emission factors[b] Predicted[c] (kg/VKT)	Emission factors[b] Predicted[c] (lb/VMT)	Emission factors[b] Actual (kg/VKT)	Emission factors[b] Actual (lb/VMT)	Predicted : Actual
P-9	Pulverized topsoil[d]	1,990	7,060	4	45	1	3	3	0.82	2.9	1.0	3.7	0.78
P-10	Pulverized topsoil[d]	809	2,870	4	92	1	3	3	0.68	2.4	0.59	2.1	1.14
P-14	Gravel[d]	1,890	6,700	4	23	1	3	3	0.39	1.4	0.13	0.46	3.04
E-7	Iron and steel Plant	225	800	2	5.1	7	6	7	0.26	0.93	0.21	0.76	1.22
E-8	Iron and steel Plant	225	800	2	5.1	7	7	8	0.29	1.02	0.28	1.0	1.02
P-3, P-5, P-6	Urban arterial site 1[e]	45.1[f]	160[f]	4	10[f]	1	3	3	0 0039	0.014	0.0042	0.015	0.93
P-15, P-16	Urban arterial site 2[e]	42.0[f]	149[f]	4	10[f]	1	3	3	0 0037	0.013	0.0037	0.0130	1.00
F-13	Iron and steel plant	57.2	203	2	13.2	1	7	8	0.096	0.34	0.16	0.58	0.59
F-14	Iron and steel plant	57.2	203	2	13.2	1	5	5	0.068	0.24	0.056	0.20	1.20
F-15	Iron and steel plant	57.2	203	2	13.2	1	5	5	0.068	0.24	0.045	0.16	1.50
F-16	Iron and steel plant	629	2,230	2	6.8	3.5	12	13	0.76	2.7	0.70	2.5	1 08
F-17	Iron and steel plant	629	2,230	2	6 8	3 5	11	12	0.70	2.5	0.48	1.7	1 47
F-18	Iron and steel plant	629	2.230	2	6.8	1	5	5	0.11	0.39	0.14	0.48	0.81
F-27	Iron and steel plant	316	1,120	2	35.7	1	13	14	0.59	2.1	0.16	0.56	3.75
F-34	Iron and steel plant	90 0	319	2	16	1	25	28	0.12	0.44	0.26	0.92	0.48
F-35	Iron and steel plant	101	358	2	10.4	1	23	25	0.085	0.30	0.39	1.4	0 21
F-45	Iron and steel plant	137	487	2	28 4	1	15	16	0.23	0.80	0.31	1.1	0.73
F-61	Iron and steel plant	804	2,850	2	21.0	1	36	40	1.9	6.6	0 68	2.4	2 75
F-62	Iron and steel plant	671	2,380	2	20.3	1	33	36	1.4	5.0	0.48	1.7	2.94

TABLE 3-30. (Concluded)

Run	Type	Road surface dust loading excluding curbs[a] (kg/km)	(lb/mile)	No. of traffic lanes	Silt (%)	I (industrial) multiplier)	Average vehicle weight (tonnes)	(tons)	Emission factors[b] Predicted[c] (kg/VKT)	(lb/VMT)	Actual (kg/VKT)	(lb/VMT)	Predicted : Actual
B-57	Iron and steel plant	268	949	2	6.5	3.5	11	12	0.28	1.0	0.31	1.1	0.91
B-58		440	1,560	2	17.9	3.5	16	18	1.7	6.2	0.56	2.0	3.10
B-59		123	435	2	14.0	3.5	10	11	0.27	0.95	0.45	1.6	0.59
B-60		194	688	2	13.5	3.5	11	12	0.42	1.5	0.54	1.9	0.79

[a] Loading distributed over traveled portion of road, i.e., traffic lanes.
[b] Particles smaller than 30 μm in Stokes diameter based on actual density of silt particles.
[c] Based on revised MRI emission factor equation in Table 1-1.
[d] Four-lane test roadway artifically loaded.
[e] Four-lane roadway with traffic count of about 10,000 vehicles per day, mostly light-duty.
[f] Estimated value.

4.0 WIND EROSION TESTING BY PORTABLE WIND TUNNEL

This section describes the field testing program using the MRI portable wind tunnel to determine the efficiency of control measures applied to storage piles. The following tests were performed at two integrated iron and steel plants - Armco's Middletown Works (designated as Plant F) and Bethlehem Steel's Burns Harbor Plant (designated as Plant H):

- Fourteen tests of wind erosion from uncontrolled coal storage piles.
- Twelve tests of wind erosion from controlled coal storage piles.
- Two tests of wind erosion from an active exposed area.
- One test of wind erosion from an inactive exposed area.

4.1 QUALITY ASSURANCE

The sampling and analysis procedures followed in this field testing program were subject to certain quality control guidelines. These guidelines will be discussed in conjunction with the activities to which they apply. These procedures met or exceeded the requirements specified in Section 3.0.

As part of the QC program for this study, routine audits of sampling and analysis procedures were performed. The purpose of the audits was to demonstrate that measurements were made within acceptable control conditions for particulate source sampling and to assess the source testing data for precision and accuracy. Examples of items audited include gravimetric analysis, flow rate calibration, data processing, and emission factor and control efficiency calculation. The mandatory use of specially designed reporting forms for sampling and analysis data obtained in the field and laboratory aided in the auditing procedure. Further detail on specific sampling and analysis procedures are provided in the following sections.

4.2 AIR SAMPLING TECHNIQUE AND EQUIPMENT

The portable wind tunnel method allows in situ measurement of emissions from wind erosion of storage piles and exposed areas. The MRI portable pull-through wind tunnel (Figure 4-1) consists of an inlet contraction, a working section, a sampling section, and a power system. The open-floored working section of the tunnel was placed directly on the surface to be tested, and the tunnel air flow was adjusted to values corresponding to the means of the upper NOAA wind speed ranges. Tunnel wind speed was measured by a pitot tube at the downstream end of the working section and was related to wind speed at the standard 10-m (30.5 ft) height by means of a logarithmic profile.

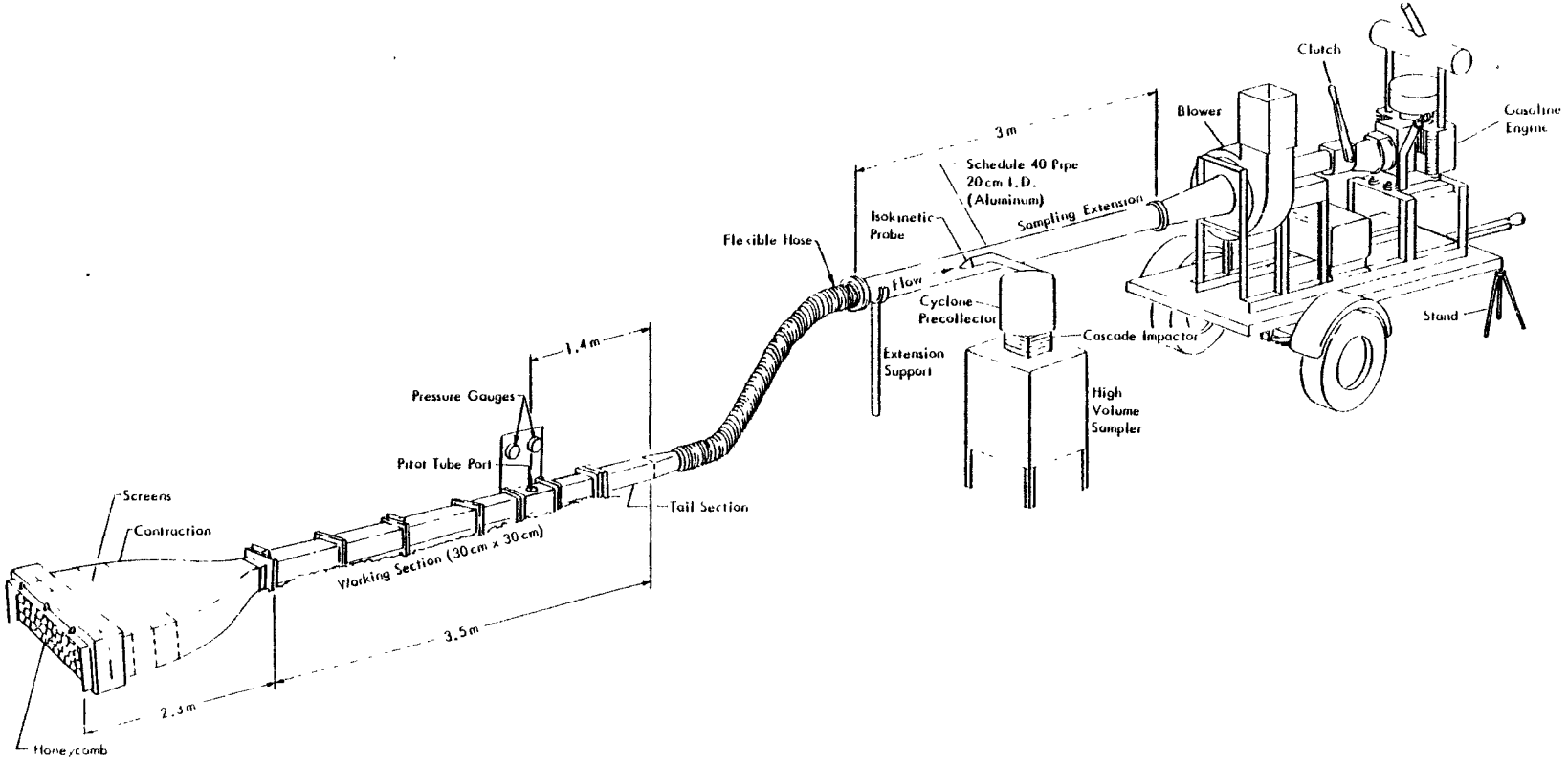

Figure 4-1. MRI portable wind tunnel.

To minimize the dust levels in the tunnel air intake stream, testing was conducted only when ambient winds were below the threshold velocity for erosion of the exposed material. A portable high volume sampler with an open-faced filter was operated on top of the inlet contraction to measure background dust levels.

An emissions sampling section was used with the pull-through wind tunnel in measuring particulate emissions generated by wind erosion. As shown in Figure 4-1, the sampling section was located between the working section outlet hose and the blower inlet. The sampling train, which was operated at 425 to 708 ℓ/min (15 to 25 ft^3/min) consisted of a tapered probe, cyclone precollector, parallel slot cascade impactor, backup filter, and high volume sampler. Interchangeable probe tips were sized for isokinetic sampling over the desired tunnel wind speed range.

Test sites at the two plants were formed by plant personnel. At plant F, a small level area for uncontrolled testing (as shown in Figure 4-2) was formed from the steam coal storage pile with a bulldozer. Controlled tests were conducted directly on the treated pile.

At plant H, test sites were prepared by having a front-end loader form two piles approximately 12 m x 15 m x 0.15 m (40 ft x 50 ft x 6 in.) in an area of the coal yard which is not heavily traveled. These test beds are shown in Figure 4-3.

The use of a front-end loader at plant H resulted in a compacted surface which is not representative of piles in the plant. For this reason, some test sites were also prepared by turning the surface with a shovel. Controlled and uncontrolled tests were run on both compacted and turned surfaces.

In order to adequately define the extent of the control measure at plant H, provision was made to measure application intensity. The latex binder (Dow Chemical M-167) regularly used at the plant was applied to the west test bed, and provisions were made to measure the application intensity. Six tared sampling pans were placed in the test bed prior to spraying and were then reweighed. Special attention was paid to the problems of the binder running off the coal into the pans and of the spray bouncing off the bottom of the pan. In order to reduce these potential errors, the lip of the pan was placed just above the coal surface and an absorbent material was used to line the bottom. A cross-sectional view of the sampling pan is shown in Figure 4-4.

4.3 PARTICULATE SAMPLE HANDLING AND ANALYSIS

4.3.1 Preparation of Sample Collection Media

Particulate samples were collected on type A slotted glass fiber impactor substrates and on type AE glass fiber filters. To minimize the problem of particle bounce, the glass fiber cascade impactor substrates were greased.

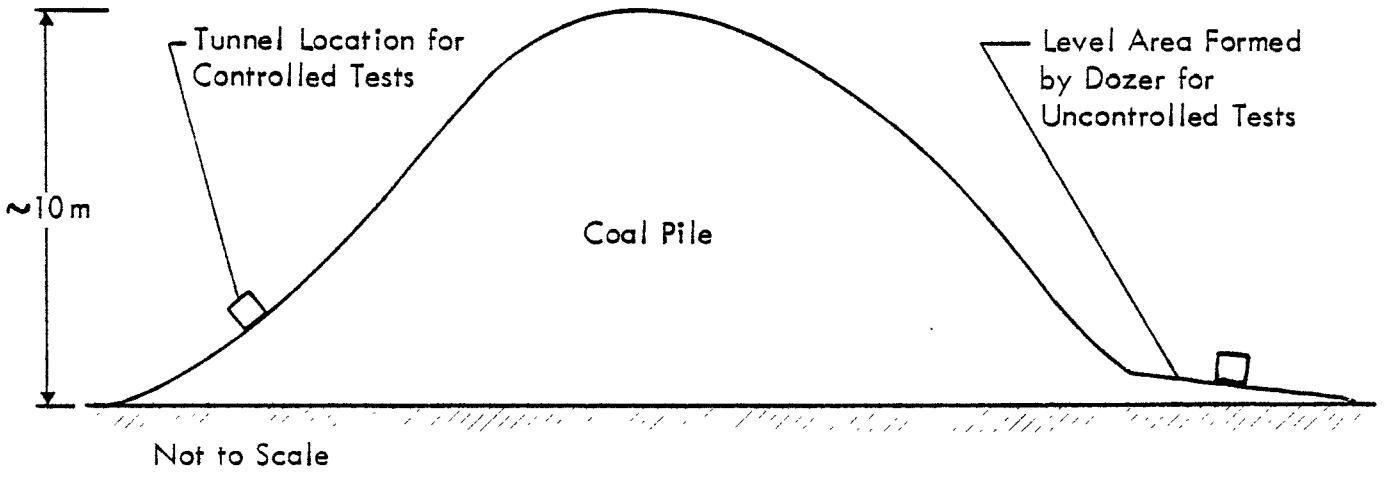

Figure 4-2. Equipment deployment for wind tunnel tests at plant F.

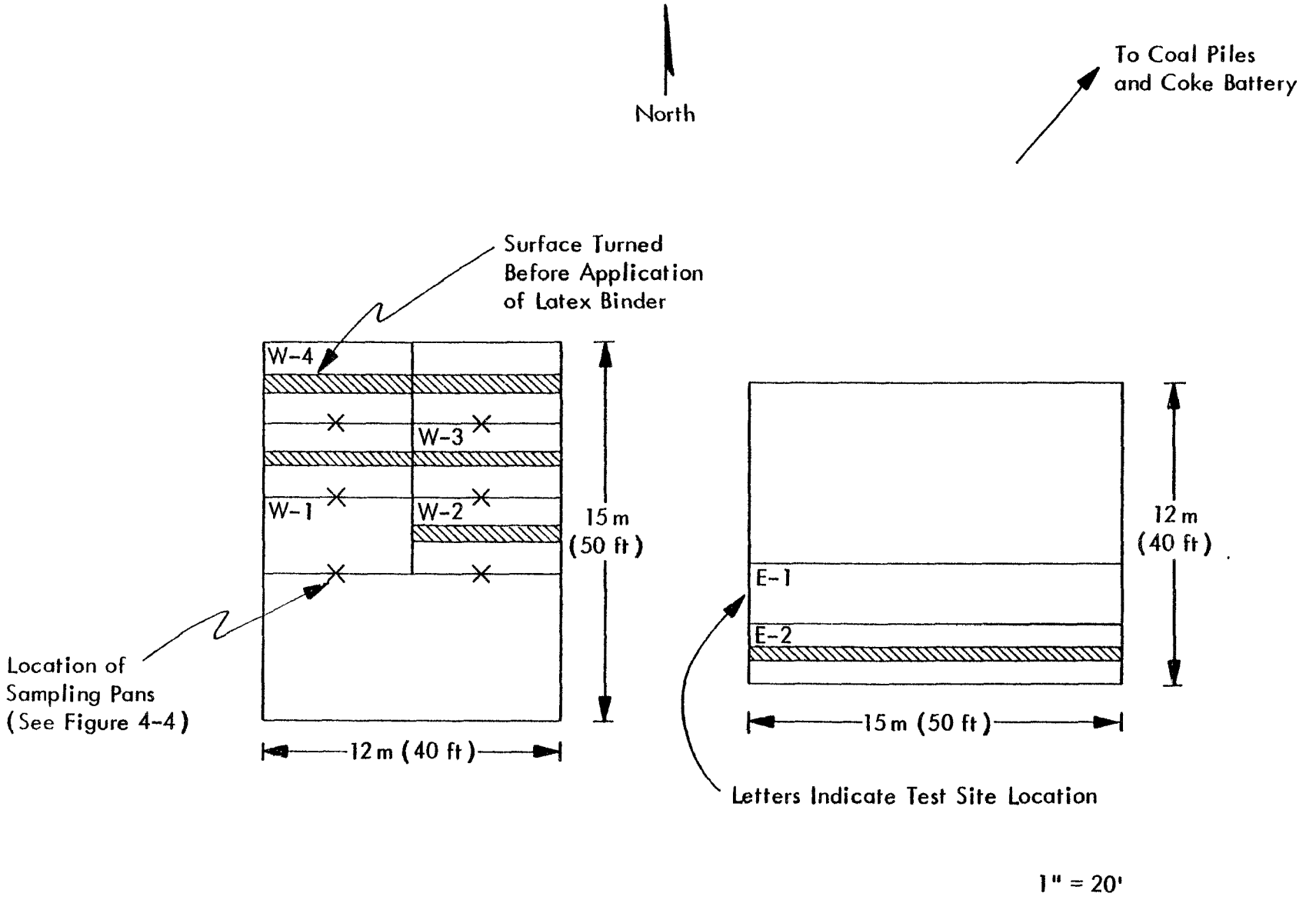

Figure 4-3. Test site locations at plant H.

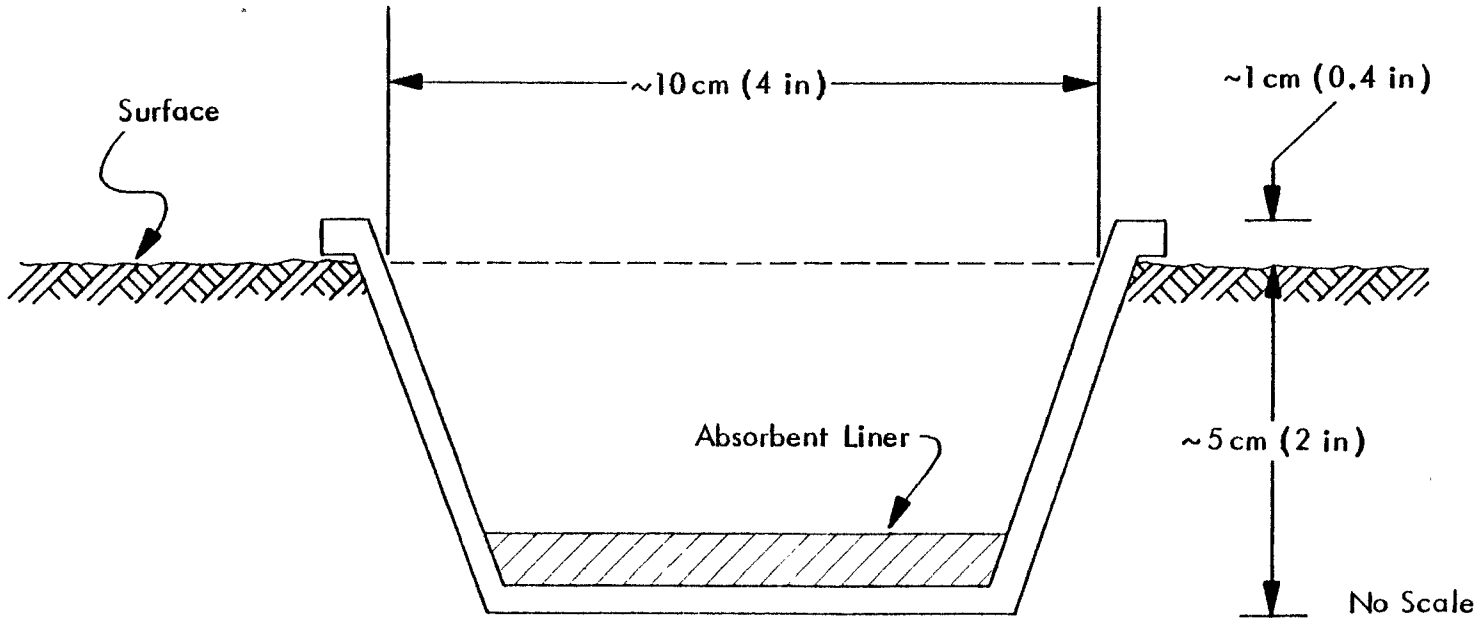

Figure 4-4. Sampling pan detail.

The grease solution was prepared by dissolving 140 g of stopcock grease in 1 liter of reagent grade toluene. No grease was applied to the borders and backs of the substrates. The substrates were handled, transported and stored in specially designed frames which protected the greased surfaces.

Prior to the initial weighing, the greased impactor substrates and hi-vol filters were equilibrated for 24 hr at constant temperature and humidity in a special weighing room. During weighing, the balance was checked at frequent intervals with standard weights to assure accuracy. The substrates and filters remained in the same controlled environment for another 24 hr, after which a second analyst reweighed them as a weighing accuracy check. If substrates or filters could not pass audit limits, the entire batch was reweighed. Ten percent of the substrates and filters taken to the field were used as blanks. The quality assurance guidelines are the same as those presented in Table 3-1.

4.3.2 Pre-Test Procedures/Evaluation of Sampling Conditions

Prior to equipment deployment, a number of decisions were made concerning the potential for acceptable testing conditions. To reduce dust levels in the tunnel air intake stream, testing would be conducted only if the ambient winds were well below the erosion threshold velocity of the surface being tested. Testing was not performed on days of or after considerable rainfall unless provisions were made to protect the test surface from the weather.

If conditions were deemed acceptable, equipment deployment began. During this 2-hr period, both high volume air samplers were calibrated using the quality control guidelines of Table 4-1.

TABLE 4-1. QUALITY CONTROL PROCEDURES FOR SAMPLING FLOW RATES

Activity	QC Check/Requirement
Calibration	
· Impactors and background hi-vol	Calibrate flows in operating ranges using calibration orifice each day prior to testing.
Orifice calibration	Calibrate against displaced volume test meter annually.

Once the source testing equipment was in place, a threshold velocity test was performed. The purposes of this preliminary test were to determine the minimum velocity at which wind erosion is initiated and to gather other data needed for sampling and analysis. The threshold velocity for a particular surface was determined by observing the onset of surface particle movement as the wind velocity was gradually increased. A subthreshold velocity profile was then measured using the pitot tube in the working section. This subthreshold velocity profile allows the calculation of the surface roughness height.

After these data were obtained, tunnel air speeds were determined corresponding to the means of the first three upper NOAA wind speed ranges above the threshold velocity of the uncontrolled test surface. A sampling train flow rate and probe tip were selected to insure isokinetic sampling. A test series consisted of runs at these three wind speeds (in ascending order) at the same site.

4.3.3 Sample Handling and Analysis

To prevent particulate losses, the exposed media were carefully transferred at the end of each run to protective containers within the MRI instrument van. In the field laboratory, exposed filters were placed in individual glassine envelopes and numbered file folders. Substrates were replaced in the protective frames. Particulate that collected on the interior surface of the cyclone preseparator was rinsed with distilled water into sample jars which were then capped and taped shut.

When exposed impactor substrates and hi-vol filters (and the associated blanks) were returned to the MRI laboratory, they were equilibrated under the same conditions as the initial weighing. After reweighing, 10% were audited to check weighing accuracy. To determine the sample weight of particulate collected on the interior surface of a sampler, the entire wash solution was passed through a 47 mm Buchner type funnel holding a glass fiber filter under suction. The sample jar was then rinsed twice with 10 to 20 ml of deionized water. This water was passed through the Buchner funnel ensuring collection of all suspended material on the 47 mm filter which was then dried in an oven at 100°C for 24 hr. After drying, the filters were conditioned at constant temperature and humidity for 24 hr.

All wash filters were weighed with a 100% audit of tared and a 10% audit of exposed filters. Blank values were determined by washing "clean" (unexposed) settling chambers in the field and following the above procedures. The quality assurances guidelines governing sample handling and analysis are the same as those presented in Table 3-1.

4.3.4 Emission Rate Calculation Procedures

To calculate emission rates from wind tunnel data, a conservation of mass approach is used. The quantity of airborne particulate generated by wind erosion of the test surface equals the quantity leaving the tunnel minus the quantity (background) entering the tunnel. The steps in the calculation procedure are described below.

4.3.4.1 Particulate Concentrations--

The definitions of particulate matter (TP, TSP, IP, FP) are the same as those given earlier for exposure profiling. Particulate concentrations are determined in a manner identical (and at the same standard conditions) to that presented earlier.

4.3.4.2 Flow Rate in Wind Tunnel--

During testing, the wind speed profile along the vertical bisector of the tunnel working section is measured with a standard pitot tube and inclined manometer. The velocity profile near the test surface (tunnel floor) and the walls of the tunnel is found to follow a logarithmic distribution:

$$u(z) = \frac{u^*}{0.4} \ln \frac{z}{z_o}$$

where: u = wind speed at z (cm/s)
z = distance from test surface (or wall) (cm)
u^* = friction velocity (cm/sec)
z_o = roughness height (cm).

The roughness height of the test surface is determined by extrapolation of the velocity profile near the surface to $u = 0$. The roughness height for the plexiglass walls and ceiling of the tunnel has been measured as 6×10^{-4} cm. These velocity profiles are integrated over the cross-sectional area of the tunnel to yield the volumetric flow rate through the tunnel for a particular set of test conditions.

4.3.4.3 Isokinetic Flow Ratio--

A pitot tube and inclined manometer are also used to measure the centerline wind speed in the sampling duct at the point where the sampling probe is installed. Because the ratio of the centerline wind speed in the sampling duct to the centerline wind speed in the working section is independent of flow rate, it can be used to determine isokinetic sampling conditions for any flow rate in the tunnel.

The isokinetic flow ratio is the ratio of the sampler intake air speed to the wind speed approaching the sampler. It is given by:

$$IFR = \frac{Q_s}{aU_s}$$

where: Q_s = sampler flow rate (m^3/s)
a = intake area of sampler (m^2)
U_s = wind speed approaching the sampler (m/s).

IFR is of interest in the sampling of TP, since isokinetic sampling assures that particles of all sizes are sampled without bias. Because probe tips of various intake areas were available for the cyclone preseparator, all tests run were within ± 5% of isokinetic conditions.

4.3.4.4 Particle Size Distributions--

Particle size distributions were determined from a cascade impactor using the proper 50% cutoff diameters for the cyclone precollector and each impaction stage. These data were fitted to a log-normal mass size distribution after correction for particle bounce using the technique discussed in Section 3.3.4.3. During controlled wind tunnel tests on coal surfaces, the background concentration was a significant percentage of the measured downwind concentration, especially when testing on the same surface for a second or third time. Therefore, microscopic analyses of the upwind filters were performed, because the size distribution of the background particulate was important. If it had been foreseen that the upwind loading was going to be such a large portion of the downwind loading, an impactor would have been placed in the upwind hi-vol to directly measure the particle size distribution by mass.

4.3.4.5 Particulate Emission Rates--

The emission rate for airborne particulate of a given particle size range generated by wind erosion of the test surface is given by:

$$E = \frac{C_n Q_t}{A}$$

where: E = particulate emission rate (g/m^2-sec)

C_n = net particulate concentration (g/m^3)

Q_t = tunnel flow rate (m^3/sec)

A = exposed test area = 0.918 m^2

4.3.4.6 Erosion Potential--

If the emission rate is found to decay significantly (by more than 20%) during back-to-back tests of a given surface at the same wind speed, due to the presence of nonerodible elements on the surface, then an additional calculation step must be performed to determine the erosion potential of the test surface. The erosion potential is the total quantity of erodible particles, in any specified particle size range, present on the surface (per unit area) prior to the onset of erosion. Because wind erosion is an avalanching process, it is reasonable to assume that the loss rate from the surface is proportional to the amount of erodible material remaining. The amount remaining is assumed to be of the form:

$$M_t = M_o e^{-kt}$$

where: M_t = quantity of erodible material present on the surface at any time (g/m^2)

M_o = erosion potential, i.e., quantity of erodible material present on the surface before the onset of erosion (g/m^2)

k = constant (s^{-1})

t = cumulative erosion time (s).

Consistent with the above equation, the erosion potential may be calculated from the measured loss rates from the test surface for two erosion times:

$$\frac{\ln\left(\frac{M_o - L_1}{M_o}\right)}{\ln\left(\frac{M_o - L_2}{M_o}\right)} = \frac{t_1}{t_2}$$

where: $L_1 = E_1 t_1$ = measured loss rate during time period 0 to t_1 (g/m^2)
$L_2 = L_1 + E_2(t_2 - t_1)$ = measured loss rate during time period 0 to t_2 (g/m^2)

4.3.5 Control Efficiency Calculation Procedure

The control efficiency in percent (C) for these wind erosion studies was found by:

$$C = \left(1 - \frac{M_{o,c}}{M_{o,u}}\right) \times 100\%$$

where
$M_{o,u}$ = erosion potential of the uncontrolled surface
$M_{o,c}$ = erosion potential of the controlled surface

It should be noted that an erosion potential can be obtained only if back-to-back tests at the same wind speed are available and if the emission rate of the second test is lower than that of the first. Should an erosion potential not be available, C was determined as:

$$C = \left(1 - \frac{E_c}{E_u}\right) \times 100\%$$

where: E_u = emission rate of the uncontrolled surface
E_c = emission rate of the controlled surface

These emission rates must be based on the same wind speed and on the same duration of erosion. In order to determine emission rates from several tests at the same site, it was assumed that any mass eroded on a test at wind speed U_1, and of duration T_1 would also have been eroded at a subsequent test if $U_2 \geq U_1$ and $T_2 \geq T_1$. This approach will be discussed in greater detail in Section 4.5.2.

4.4 AGGREGATE MATERIAL SAMPLING AND ANALYSIS

Samples of the test surface were collected, where possible, before and after each test. When several tests were performed back-to-back, samples could only be obtained before and after the series. These samples were analyzed for silt and moisture content.

Storage pile samples were removed from a known area using a dust pan and whisk broom. The depth of the sample was based on the largest piece of raw material in the surface. The silt and moisture analysis procedures were identical to those presented in Tables 3-5 and 3-6.

4.5 RESULTS FOR WIND EROSION OF COAL PILES

As mentioned earlier in this section, 26 tests of fugitive dust emissions generated by wind erosion of coal piles were performed. In addition to these tests, three tests of wind erosion of exposed areas in integrated iron and steel plants were conducted. These tests were preliminary checks of the sampling equipment's performance.

4.5.1 Emission Rates

Before presenting the results of the 29 wind erosion tests, the characteristics of the test control techniques will be discussed. Two controls were tested--(1) a 16.7% solution of Coherex® in water applied at an intensity of 3.4 ℓ/m^2 (0.74 gal/yd^2) at plant F and (2) a 2.8% solution of Dow Chemical M-167 Latex Binder in water applied at an average intensity of 6.8 ℓ/m^2 (1.5 gal/yd^2) at plant H. These control measures were applied by either plant personnel or a contractor retained by the plant. The Coherex® at plant O was applied once in August 1980 and every 4 to 6 weeks thereafter while the latex binder at plant H was applied approximately every week.

The site and sampling parameters for the runs are shown in Tables 4-2 and 4-3, respectively. The tunnel centerline wind speeds for the uncontrolled tests were selected to correspond to the means of the first three upper NOAA wind speed ranges above the threshold velocity. Threshold velocities for each run are presented in Table 4-4.

In anticipation of a high control efficiency associated with the latex binder, filters were not changed after some tests at plant H in order to produce an acceptable mass on each substrate of the cascade impactor. The second (and sometimes the third) test was then run with the same filters as the first, but at a higher tunnel velocity. The second test was then denoted by adding a letter suffix to the prior test number.

Results for test series H-30 through H-30B will not be reported because of difficulties experienced in filter handling. While the testing was underway, rainstorms entered the area. When the impactor substrates were removed, they were found to be fairly damp but some appeared loaded. However, upon weighing, net catches were so small as to be beyond the accuracy of the analysis techniques. It is also possible that some of the wet filter material became brittle upon drying and flaked off during handling.

Table 4-5 summarizes the particle size data for the wind erosion tests. Particle sizes are expressed in terms of aerodynamic diameter. Note that the very small portion of material collected on the interior surface of the probe tip was ignored in the particle size analysis.

TABLE 4-2. WIND EROSION TEST SITE PARAMETERS

Run[a]	Material	Condition	Control measure	Site	Date	Start time	Sampling duration (min)	Cross-sectional velocity in test section (m/s)	(mph)	Temperature (°C)
F-46	Exp. area	Inactive	None	H-1	10/21/80	1500	30	10.7	23.9	21
F-47	Exp. area	Active	None	H-2	10/21/80	1628	10	8.36	18.7	21
F-48	Exp. area	Active	None	H-2	10/21/80	1701	3	11.6	25.9	21
F-49	Coal	Active	None	I-1	10/22/80	1156	20	6.06	13.6	21
F-50	Coal	Active	None	I-1	10/22/80	1217	10	8.34	18.7	21
F-51	Coal	Active	None	I-1	10/22/80	1332	40	8.34	18.7	21
F-52	Coal	Active	None	I-1	10/22/80	1419	15	11.2	25.1	21
F-53	Coal	Active	None	I-1	10/22/80	1443	60	11.2	25.1	18
F-54	Coal	Active	None	I-2	10/23/80	1026	20	5.49	12.3	18
F-55	Coal	Active	None	I-2	10/23/80	1100	30	8.27	18.5	18
F-56	Coal	Undisturbed	Coherex®	I-3	10/23/80	1355	60	11.9	26.6	18
F-57	Coal	Undisturbed	Coherex®	I-3	10/23/80	1511	60	11.9	26.6	18
H-20	Coal	Compacted	None	E-1	10/13/81	1622	20	9.68	21.7	12
H-21	Coal	Compacted	None	E-1	10/13/81	1700	20	12.6	28.1	12
H-22	Coal	Compacted	None	E-1	10/13/81	1747	20	13.0	29.0	12
H-23	Coal	Turned	None	E-2	10/15/81	1321	2	8.32	18.6	17
H-24	Coal	Turned	None	E-2	10/15/81	1340	18	8.47	19.0	17
H-25	Coal	Turned	None	E-2	10/15/81	1450	20	11.2	24.9	17
H-26	Coal	Turned	None	E-2	10/15/81	1542	20	13.2	29.5	17
H-27	Coal	Compacted	Latex	W-1	10/16/81	1504	20	12.0	26.9	16
H-28	Coal	Turned	Latex	W-2	10/16/81	1600	20	8.63	19.3	16
H-28A	Coal	Turned	Latex	W-2	10/16/81	1625	20	11.0	24.7	16
H-29	Coal	Turned	Latex	W-2	10/16/81	1718	20	13.4	30.0	16
H-30	Coal	Turned	Latex	W-3	10/17/81	1128	20	8.99	20.1	12
H-30A	Coal	Turned	Latex	W-3	10/17/81	1158	20	11.6	25.9	12
H-30B	Coal	Turned	Latex	W-3	10/17/81	1224	20	14.0	31.2	12
H-31	Coal	Turned	Latex	W-4	10/18/81	1127	20	8.89	19.9	8
H-31A	Coal	Turned	Latex	W-4	10/18/81	1205	20	11.5	25.6	8
H-31B	Coal	Turned	Latex	W-4	10/18/81	1243	20	13.6	30.5	8

[a] Runs with a letter suffix indicate that filters were not changed from the prior run in order to obtain an acceptable sample on each substrate of the impactor.

TABLE 4-3. WIND EROSION SAMPLING PARAMETERS

Run	Centerline velocity (m/s)	Centerline velocity (mph)	Flow rate (m^3/hr)	Sampling module: Probe Diameter (cm)	Probe Area (cm^2)	Velocity Approach (m/s)	Velocity Inlet (m/s)	IFR[a]	Volume sampled (m^3)	Total mass collected (mg)
F-46	13.7	30.6	3,570	1.55	1.89	38.6	38.2	0.990	13.0	4.72
F-47	10.8	24.2	2,800	1.98	3.08	35.4	35.7	1.01	6.60	309
F-48	15.0	33.5	3,890	1.55	1.89	49.2	49.2	1.00	1.68	413
F-49	8.14	18.2	2,030	2.54	5.07	20.8	20.7	0.997	12.6	5.06
F-50	11.2	25.0	2,790	1.98	3.08	28.6	27.9	0.976	5.15	22.6
F-51	11.2	25.0	2,790	1.98	3.08	28.6	27.9	0.976	20.6	38.2
F-52	15.0	33.5	3,740	1.98	3.08	38.2	37.4	0.979	10.4	82.9
F-53	15.0	33.5	3,740	1.98	3.08	38.2	37.4	0.979	41.5	73.7
F-54	7.11	15.9	1,840	2.54	5.07	17.1	17.0	0.997	10.4	5.30
F-55	10.7	24.0	2,760	1.98	3.08	25.8	25.7	0.997	14.3	13.2
F-56	15.0	33.5	4,000	1.55	1.89	41.1	40.3	0.981	27.4	8.16
F-57	15.0	33.5	4,000	1.55	1.89	41.1	40.3	0.981	27.4	5.76
H-20	12.7	28.4	3,220	1.98	3.08	27.0	26.6	0.987	9.85	232
H-21	16.4	36.7	4,180	1.98	3.08	34.0	35.4	1.04	13.1	459
H-22	17.0	38.0	4,320	1.98	3.08	36.2	36.2	1.00	13.4	105
H-23	10.8	24.2	2,770	1.98	3.08	24.2	24.0	0.993	0.889	9.43
H-24	11.0	24.6	2,820	1.98	3.08	24.2	24.0	0.994	8.00	43.0
H-25	14.4	32.2	3,710	1.98	3.08	32.0	32.7	1.02	12.1	135
H-26	17.2	38.5	4,390	1.98	3.08	38.2	38.4	1.00	14.2	1,770
H-27	17.2	38.5	4,000	1.98	3.08	40.0	38.4	0.960	14.2	198
H-28	11.1	24.8	2,870	1.98	3.08	25.5	24.5	0.961	9.06	121
H-28A	14.3	32.0	3,670	1.98	3.08	32.9	32.7	0.995	12.1	
H-29	17.2	38.5	4,460	1.55	1.88	39.6	39.4	0.995	8.89	50.4
H-30	11.1	24.8	2,990	1.98	3.08	25.5	24.5	0.961	9.06	64.2
H-30A	14.3	32.0	3,850	1.98	3.08	32.9	32.7	0.995	12.1	
H-30B	17.2	38.5	4,640	1.55	1.88	39.6	39.4	0.995	8.89	
H-31	11.1	24.8	2,960	1.98	3.08	25.5	25.4	0.997	9.40	675
H-31A	14.3	32.0	3,820	1.98	3.08	32.9	32.7	0.995	12.1	
H-31B	17.1	38.3	4,540	1.55	1.88	39.6	39.4	0.995	8.89	

[a] Isokinetic Flow Ratio = Inlet Velocity/Approach Velocity

TABLE 4-4. THRESHOLD VELOCITIES FOR WIND EROSION

Run	Material	Condition	Control measure	Site	Threshold velocity: Tunnel centerline m/s	Tunnel centerline mph	Equivalent at 10 m height m/s	Equivalent at 10 m height mph
F-46	Exp. area	Inactive[a]	None	H-1	13.0	29.2	21.8	48.8
F-47	Exp. area	Active[b]	None	H-2	8.85	19.8	15.3	34.3
F-48	Exp. area	Active[b]	None	H-2	8.85	19.8	15.3	34.3
F-49	Coal	Active	None	I-1	8.14	18.2	16.4	36.7
F-50	Coal	Active	None	I-1	8.14	18.2	16.4	36.7
F-51	Coal	Active	None	I-1	8.14	18.2	16.4	36.7
F-52	Coal	Active	None	I-1	8.14	18.2	16.4	36.7
F-53	Coal	Active	None	I-1	8.14	18.2	16.4	36.7
F-54	Coal	Active[c]	None	I-2	5.94	13.3	10.4	23.4
F-55	Coal	Active[c]	None	I-2	5.94	13.3	10.4	23.4
F-56	Coal	Undisturbed	Coherex®	I-3	12.0	26.9	18.1	40.6
F-57	Coal	Undisturbed	Coherex®	I-3	12.0	26.9	18.1	40.6
H-20	Coal	Compacted	None	E-1	9.21	20.6	16.9	37.8
H-21	Coal	Compacted	None	E-1	9.21	20.6	16.9	37.8
H-22	Coal	Compacted	None	E-1	9.21	20.6	16.9	37.8
H-23	Coal	Turned	None	E-2	9.48	21.2	16.6	37.2
H-24	Coal	Turned	None	E-2	9.48	21.2	16.6	37.2
H-25	Coal	Turned	None	E-2	9.48	21.2	16.6	37.2
H-26[d]	Coal	Turned	None	E-2	9.48	21.2	16.6	37.2
H-27[d]	Coal	Compacted	Latex	W-1	> 12.7	> 28.5	> 24.0	> 53.6
H-28[d]	Coal	Turned	Latex	W-2	> 11.1	> 24.8	> 19.5	> 43.6
H-28A[d]	Coal	Turned	Latex	W-2	> 11.1	> 24.8	> 19.5	> 43.6
H-29[d]	Coal	Turned	Latex	W-2	> 11.1	> 24.8	> 19.5	> 43.6
H-30	Coal	Turned	Latex	W-3	10.0	22.4	14.8	33.2
H-30A	Coal	Turned	Latex	W-3	10.0	22.4	14.8	33.2
H-30B	Coal	Turned	Latex	W-3	10.0	22.4	14.8	33.2
H-31	Coal	Turned	Latex	W-4	10.3	23.0	15.6	34.8
H-31A	Coal	Turned	Latex	W-4	10.3	23.0	15.6	34.8
H-31B	Coal	Turned	Latex	W-4	10.3	23.0	15.6	34.8

[a] Area was quite crusted.

[b] Tunnel placed over truck tracks.

[c] These tests were run on coal that was dumped onto pile immediately before equipment deployment.

[d] Once the lowest centerline velocity of the corresponding uncontrolled test was reached, the search for a threshold velocity was abandoned. Hence, lower bounds on the threshold velocity are given.

TABLE 4-5. AERODYNAMIC PARTICLE SIZE DATA - WIND EROSION

Run	Mass median diameter[a] (μm)	% < 50 μm[a]	% < 15 μm	% < 5 μm	% < 2.5 μm
F-46	90	41	24	13	8.0
F-47	> 100	20	11	5.5	3.5
F-48	> 100	13	6.5	3.5	2.2
F-49	30	60	36	18	11
F-50	> 100	25	14	7.0	4.5
F-51	> 100	22	11	5.5	3.4
F-52	> 100	1.2	0.60	0.32	0.21
F-53	> 100	9.5	5.0	1.6	0.80
F-54	9.0	85	62	37	23
F-55	71	64	24	12	7.0
F-56	16	71	48	28	17
F-57	27	60	40	24	16
H-20	> 100	32	15	6.0	4.0
H-21	> 100	16	7.5	3.3	1.9
H-22	> 100	19	9.5	4.5	2.5
H-23	93	37	18	7.0	3.8
H-24	> 100	11	4.9	2.2	1.3
H-25	> 100	11	3.3	0.90	0.32
H-26	> 100	5.2	1.7	0.45	0.20
H-27	> 100	8.0	3.5	0.76	0.85
H-28, H-28A	> 100	14	6.4	2.7	1.4
H-29	> 100	16	8.2	4.0	2.5
H-30, H-30A, H-30B	b	b	b	b	b
H-31, H-31A, H-31B	> 100	6.1	1.9	0.53	0.22

[a] The values are based on a large log-normal extrapolation of measured data.
[b] Substrates became wet, invalidating data.

Table 4-6 presents data on the surface properties which are believed to have a significant effect on emission rate. Table 4-7 summarizes the wind erosion test results.

4.5.2 Control Efficiencies

As discussed earlier, the efficiency of control measures applied to coal storage piles are based on either erosion potentials or on emission rates. The erosion potentials found in this study are presented in Table 4-8. Note that a lower bound is given for the IP erosion potential for uncontrolled steam coal. This is due to the fact that the measured emission rate for F-53 did not decrease from that of run F-52. In this case, an erosion potential cannot be determined.

Combined emission rates for Cambria coal are given in Table 4-9. These are based on an erosion time of 20 min. A control efficiency determined from the ratio of emission rates is based on the assumption that, after a suitably long erosion time, the total mass lost approximates the erosion potential. In this case, the ratio of emission rates approximates the ratio of erosion potentials.

In order to substantiate this approach, the total mass lost during Runs H-23 and H-24 was compared to the erosion potential found using these runs. The results are presented below:

Size range	Mass lost during H-23 and H-24 ÷ erosion potential
TP	0.783
IP	1.00
FP	0.969

From these values, one may see that 20 min of erosion can quite adequately approximate the erosion potential. This is especially true for inhalable and fine particulate emissions. For total particulate emissions, the approximation is not as good; however, there is the complicating effect of creeping motion. Twenty minutes is a long enough time for large particles to roll along the surface until they finally enter the tail section of the wind tunnel. These particles are, of course, not airborne. Therefore, it is believed that the mass eroded after 20 min also approximates the erosion potential for TP.

Analysis of Runs H-23 and H-24 proves that the erosion potential was approximated at 10.7 m/s centerline speed (24 mph). It is reasonable to assume that this approximation improves as the wind speed is increased. Therefore, one can conclude that the other wind erosion tests conducted in this study also adequately approximated the erosion potentials since they all occurred at a centerline wind speed greater than 10.7 m/s (24 mph).

TABLE 4-6. PROPERTIES OF SURFACES TESTED

Run[a]	Surface: Type	Surface: Control measure	Site	Before erosion: Silt (%)	Before erosion: Moisture (%)	After erosion: Silt (%)	After erosion: Moisture (%)	Average erosion: Silt (%)	Average erosion: Moisture (%)	Roughness height (cm)
F-46	Exposed area	None	H-1	5.50	5.56	5.62	3.75	5.6	4.7	0.03
F-47	Exposed area	None	H-2	8.26	2.51	-	-	8.2	2.9	0.05
F-48	Exposed area	None	H-2	-	-	8.11	3.26	8.2	2.9	0.05
F-49	Coal	None	I-1	4.25	2.70	-	-	4.0	2.3	0.25
F-50	Coal	None	I-1	-	-	-	-	4.0	2.3	0.25
F-51	Coal	None	I-1	-	-	-	-	4.0	2.3	0.25
F-52	Coal	None	I-1	-	-	-	-	4.0	2.3	0.25
F-53	Coal	None	I-1	-	-	3.77	1.99	4.0	2.3	0.25
F-54	Coal	None	I-2	-	-	-	-	-	-	0.06
F-55	Coal	None	I-2	-	-	-	-	-	-	0.06
F-56	Coal	Coherex®	I-3	3.02	3.60	-	-	3.0	3.6	0.004
F-57	Coal	Coherex®	I-3	-	-	-	-	3.0	3.6	0.004
H-20	Coal	None	E-1	-	-	-	-	2.1	3.4	0.12
H-21	Coal	None	E-1	-	-	-	-	2.1	3.4	0.12
H-22	Coal	None	E-1	-	-	2.1	3.4	2.1	3.4	0.12
H-23	Coal	None	E-2	6.5	-	-	-	6.0	8.1	0.087
H-24	Coal	None	E-2	-	-	-	-	6.0	8.1	0.087
H-25	Coal	None	E-2	-	-	-	-	6.0	8.1	0.087
H-26	Coal	None	E-2	-	-	5.6	8.1	6.0	8.1	0.087
H-27	Coal	Latex	W-1	4.0	3.0[b]	4.4	4.9	4.2	4.9	0.158
H-28	Coal	Latex	W-2	2.8	3.5[b]	-	-	3.6	5.9	0.051
H-28A	Coal	Latex	W-2	-	-	-	-	3.6	5.9	0.051
H-29	Coal	Latex	W-2	-	-	4.5	5.9	3.6	5.9	0.051
H-30	Coal	Latex	W-3	5.3	5.6	-	-	5.3	5.6	0.0010
H-30A	Coal	Latex	W-3	-	-	-	-	5.3	5.6	0.0010
H-30B	Coal	Latex	W-3	-	-	-	-	5.3	5.6	0.0010
H-31	Coal	Latex	W-4	4.6	6.8	-	-	4.3	6.8	0.0050
H-31A	Coal	Latex	W-4	-	-	-	-	4.3	6.8	0.0050
H-31B	Coal	Latex	W-4	-	-	4.0	5.2[b]	4.3	6.8	0.0050

[a] Runs with a letter suffix indicate that filters were not changed from the prior run in order to obtain an acceptable sample on each substrate of the impactor.

[b] The sample depth in the pan was too great to allow proper ventilation; thus these moisture values may be too low.

TABLE 4-7. WIND EROSION TEST RESULTS

Run	Material	Condition	Control measure	Cross-sectional average velocity in test section (m/s)	(mph)	Friction velocity (m/s)	Cumulative erosion time (min)	Net emission rate TP (mg/m²/s)	TP (lb/acre/s)	TP (mg/m²/s)	TP (lb/acre/s)	FP (mg/m²/s)	FP (lb/acre/s)
F-46	Exposed area	Inactive	None	10.7	24.0	0.878	30	0.0843	0.00075	-	-	-	-
F-47	Exposed area	Active	None	8.41	18.8	0.757	10	39.1	0.348	5.19	0.0463	1.75	0.0156
F-48	Exposed area	Active	None	11.7	26.1	1.05	13	288	2.57	17.0	0.152	5.31	0.0473
F-49	Steam coal	Active	None	6.09	13.6	0.792	20	0.215	0.00192	0.0685	0.000611	0.0238	0.000212
F-50	Steam coal	Active	None	8.38	18.8	1.09	30	3.65	0.0325	0.489	0.00436	0.163	0.00145
F-51	Steam coal	Active	None	8.38	18.8	1.09	70	5.14	0.0458	0.569	0.00507	0.179	0.00160
F-52	Steam coal	Active	None	11.2	25.2	1.46	85	9.06	0.0808	0.0543	0.000484	0.0181	0.000161
F-53	Steam coal	Active	None	11.2	25.2	1.46	145	2.01	0 0179	0.0806	0.000718	0.0161	0.000144
F-54	Steam coal	Active	None	5.52	12.3	0.514	20	0.258	0.00230	0.163	0.00145	0.0635	0.000566
F-55	Steam coal	Active	None	8.31	18.6	0.775	50	0.753	0.00671	0.166	0.00148	0.0516	0.000460
F-56	Steam coal	Undisturbed	Coherex®	12.0	26.9	0.727	60	0.303	0.00270	0.144	0.00128	0.0573	0.000511
F-57	Steam coal	Undisturbed	Coherex®	12.0	26.9	0.727	120	0.199	0.00177	0.0739	0.000659	0.0370	0.000330
H-20	Coking coal	Compacted	None	9.68	21.6	1.05	20	2.14	0.0191	0.265	0.00236	0.125	0.00111
H-21	Coking coal	Compacted	None	12.6	28.1	1.36	40	43.9	0.391	3.42	0.0305	1.01	0.00900
H-22	Coking coal	Compacted	None	13.0	29.0	1.41	60	9.96	0.0888	0.911	0.00812	0.303	0.00270
H-23	Coking coal	Turned	None	8.32	18.6	0.837	2	8.89	0.0792	1.51	0.0135	0.308	0.00274
H-24	Coking coal	Turned	None	8.47	19.0	0.852	20	4.47	0.0398	0.113	0.00101	0.0844	0.000752
H-25	Coking coal	Turned	None	11.2	24.9	1.12	40	12.4	0.110	0.285	0.00254	0.140	0.00125
H-26	Coking coal	Turned	None	13.2	29.5	1.33	60	166	1.48	2.64	0.0235	0.319	0.00284
H-27	Coking coal	Compacted	Latex	12.0	26.9	1.25	20	16.7	0.149	0.391	0.00348	0.176	0.00157
H-28	Coking coal	Turned	Latex	8.63	19.3	0.780	20	-	-	-	-	-	-
H-28A	Coking coal	Turned	Latex	11.0	24.7	1.00	40	10.9	0.0972	0.567	0.00505	0.267	0.00238
H-29	Coking coal	Turned	Latex	13.4	30.0	1.21	60	7.38	0.0658	0.424	0.00378	0.216	0.00192
H-30	Coking coal	Turned	Latex	8.99	20.1	0.462	20	-	-	-	-	-	-
H-30A	Coking coal	Turned	Latex	11.6	25.9	0.595	40	-	-	-	-	-	-
H-30B	Coking coal	Turned	Latex	14.0	31.2	0.716	60	-	-	-	-	-	-
H-31	Coking coal	Turned	Latex	8.89	19.9	0.554	20	-	-	-	-	-	-
H-31A	Coking coal	Turned	Latex	11.5	25.6	0.713	40	-	-	-	-	-	-
H-31B	Coking coal	Turned	Latex	13.6	30.5	0.853	60	104	0.927	1.65	0.0147	0.394	0.00351

From Tables 4-8 and 4-9, control efficiencies were determined and are presented in Table 4-10. The efficiency of Coherex® in controlling IP emissions from active steam coal is expressed in terms of a lower bound. This was necessary because it was not possible to obtain an IP erosion potential, as discussed earlier.

The two chemicals applied to active (or turned) coal surfaces appear to be less effective in controlling emissions in the smaller size ranges. In the case of compacted Cambria coking coal, the control efficiency of the latex binder was fairly constant over the size ranges considered.

Figure 4-5 shows the decay in control efficiency that was observed for the latex binder. The TP control efficiency was reduced approximately in half from the second to the fourth day, while the IP control efficiency dropped roughly one-third. Note that the measured efficiency of control for FP emissions showed an increase over the same period. However, these values must be considered suspect because of light loadings on the impactor substrates. Further tests must be performed in order to adequately characterize the control efficiency for fine particulate emissions.

From the data presented in Table 4-10, it appears that the latex binder is more effective in controlling emissions from the turned surface as the wind speed increases. In the uncontrolled case, the TP and IP emission rate increased approximately 1000% and 500%, respectively, when the tunnel centerline wind speed was raised from 14.4 m/s (32.2 mph) to 17.2 m/s (38.5 mph). The corresponding increases for the controlled surface were 70% and 80%, respectively. Thus the measured control efficiencies for TP and IP were substantially higher for the greater wind speed. The FP control efficiency also shows this trend, but this result should also be considered suspect in light of the discussion above.

TABLE 4-8. EROSION POTENTIALS FOR COAL

Type	Condition	Control measure	Centerline wind speed (m/s)	Centerline wind speed (mph)	Erosion potential (g/m^2) TP	Erosion potential (g/m^2) IP	Erosion potential (g/m^2) FP
Steam Coal	Active	None	15.0	33.5	30.6	> 2.08	0.908
Steam Coal	Undisturbed	Coherex®	15.0	33.5	3.18	0.788	0.343
Coking (lo-vol) coal	Turned	None	11.0	24.6	7.53	0.303	0.135

TABLE 4-9. TWENTY-MINUTE EMISSION RATES FOR CAMBRIA COKING COAL

Centerline wind speed		Net emission rate ($mg/m^2/s$)					
		Runs H-23 - 26			Runs H-28 - 29		
(m/s)	(mph)	TP	IP	FP	TP	IP	FP
11	25	4.91	0.253	0.107	-	-	-
14	32	17.3	0.538	0.247	10.9	0.567	0.267
17	38	183	3.18	0.566	18.3	0.991	0.483

TABLE 4-10. CONTROL EFFICIENCIES FOR WIND EROSION OF COAL STORAGE PILES

Control Measure	Surface Condition	Time after application (days)	Time after rainfall[a] (days)	Centerline wind speed (m/s)	Control efficiency[b] (%)		
					TP	IP	FP
Coherex®	Undisturbed	~ 60	4	15.0	89.6	≥ 62.1	62.2
Latex	Compacted	2	2	17.2	70.2	91.5	87.8
Latex	Turned	2	2	14.3	37.0	c	c
Latex	Turned	2	2	17.2	90.0	68.8	14.7
Latex	Turned	4	4[d]	17.1	43.2	48.1	30.4

[a] 0.1 inch or more.

[b] Control efficiencies for the latex binder are based on 20-min erosion rates. Those for Coherex® are based on erosion potentials.

[c] No reduction in emissions observed.

[d] The test sites at plant H were protected from rainfall by plastic covers.

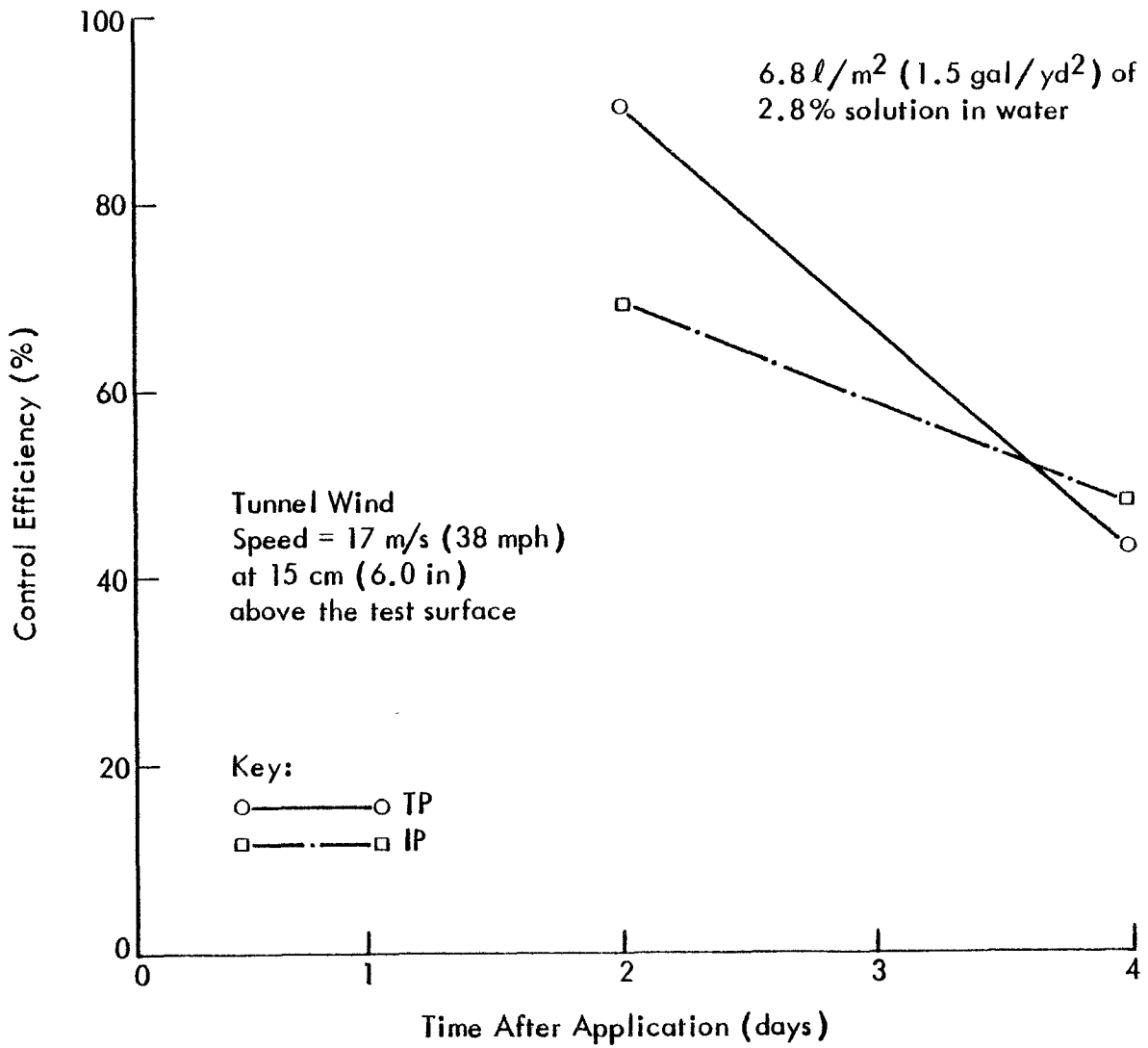

Figure 4-5. Decay in control efficiency of latex binder applied to coal storage piles.

5.0 OPEN DUST CONTROL DESIGN, OPERATION AND COST PARAMETERS

A limited amount of design/operation and cost data were collected from the three plants at which testing was performed during this study. The questionnaires shown in Appendix B were completed by personnel representing Armco-Middletown, Armco-Houston, and Bethlehem-Burns Harbor. Since the distinction between design and operational data is difficult to verify from a questionnaire, these data will simply be designated as design/operation data. Also shown on the questionnaire were cost data.

This section contains the results of the questionnaire as well as a theoretical treatment of fugitive dust control cost-effectiveness analysis.

5.1 DESIGN/OPERATION PARAMETERS

The most important design/operation parameters are application intensity, frequency and dilution ratio, if applicable. These variables, as determined from the questionnaire, are summarized in Tables 5-1 through 5-4. Many miscellaneous characteristics of the control system are presented in Appendix C.

5.2 COST PARAMETERS

Costs associated with purchase, installation, operation, and maintenance should all be quantified in order to evaluate the cost-effectiveness of a given open dust control technique. These costs, as determined from the questionnaire, are shown in Table 5-5. To facilitate comparisons between control techniques, the cost data in Table 5-5 were placed on a dollar per unit of treated source extent and on a dollar per unit of actual source extent in Tables 5-6 and 5-7, respectively.

5.3 THEORETICAL COST-EFFECTIVENESS ANALYSIS

The most informative method for comparing cost data is on a cost-effectiveness basis. Cost-effectiveness in air pollution control is defined as dollars expended per mass of emissions reduced:

$$CE = \frac{D}{ER}$$

where: CE = cost-effectiveness ($/lb of emissions reduced)
D = control technique cost ($/year)
ER = emissions reduction (pound of emissions reduced/year)

TABLE 5-1. DESIGN/OPERATION PARAMETERS - PAVED ROADS

Plant	Control	Application intensity	Application frequency
Middletown Works	Vacuum sweeper or	12,000 cfm vacuum blower capacity	Once per 2 or 3 days
	Flusher	1,800 gal/mile at 50 psig	Once per 2 or 3 days
Houston Works	Broom sweeper and	NA	Once per 3 days
	Flusher	0.48 gal/yd^2 under unknown pump pressure	Once per 3 days

TABLE 5-2. DESIGN/OPERATION PARAMETERS - UNPAVED ROADS

Plant	Control	Application intensity	Dilution ratio chemical:water	Application frequency
Middletown Works	Coherex®	0.19 gal/yd^2 (initial application)	1:5	-
		0.28 gal/yd^2 (remaining applications)	1:8	Once every 2 days to Once every 6 weeks
Houston Works	Watering	0.48 gal/yd^2	-	Once every 3 days

TABLE 5-3. DESIGN/OPERATION PARAMETERS - UNPAVED PARKING LOTS AND EXPOSED AREAS

Plant	Control	Application intensity	Dilution ratio chemical:water	Application frequency
Middletown Works	Coherex®	910 gal/acre (initial application)	1:5	2 or 3 times/year
		1,364 gal/acre (remaining applications)	1:8	

TABLE 5-4. DESIGN/OPERATION PARAMETERS--STORAGE PILES

Plant	Control	Material	Application intensity	Dilution ratio chemical:water	Application frequency
Middletown Works	Watering	Coal	0.8 gal/yd^2	-	Once every 2 days
		Limestone	N/A	-	N/A
		Taconite	N/A	-	N/A
Houston Works	Watering	Coal (main pile)	1.4 gal/yd^2	-	300 days/yr (when rainfall < 1/4 in.)
		Coal (surge pile)	1.4 gal/yd^2	-	300 days/yr (when rainfall < 1/4 in.)
Burns Harbor	Latex	Coal	1.5 gal/yd^2	1:35	Once per week

TABLE 5-5. SUMMARY OF OPEN DUST CONTROL COST DATA

Plant	Source	Control	Purchase and installation cost ($)	Year of purchase	Estimated lifetime (yrs)	1980 Operation and maintenance costs ($)	1980 Treated source extent	Actual source extent
Middletown Works	Paved roads	2 Vacuum sweepers	144,000	1980	5	214,000	2,020 miles	16.9 miles
		Flusher	68,000	1976	10	57,000	5,080 miles	
	Unpaved roads	Coherex, distributor truck and storage tanks	100,000	1980	7	287,000	1,630 miles	7.1 miles
	Coal storage piles	Stationary water spray	350,000	1980	20	1,000	1,650 acres	9 acres
	Limestone and taconite piles	Water truck (1,500 gal. cap.)	33,000	1979	7	54,000	1,810 acres	10 acres
	Unpaved parking lots and exposed areas	Coherex, distributor truck				224,000	NA	NA
Houston Works	Paved roads	Broom sweeper No. 1	18,000	1978	5	65,100	888 miles	14.6 miles
		Broom sweeper No. 2	20,000	1980	5	57,000	888 miles	
	Unpaved roads	Flusher	34,000	1978	7	52,300	1,780 miles	
		Water truck				15,400	448 miles	4.3 miles
	Main coal piles	Stationary water spray	217,000	1975	20	8,600	2,150 acres	7.2 acres
	Surge coal pile	Stationary water spray	72,200	1975	20	8,600	110 acres	0.4 acres
Burns Harbor	Lo-vol coal pile	Latex binder (sprayed by subcontractor)	58,100 (chemical only)	-	-	-	N/A	N/A

TABLE 5-6. OPEN DUST CONTROL COST COMPARISON IN DOLLARS PER UNIT OF TREATED SOURCE EXTENT

Plant	Source	Control	Unit of treated source extent	1980 Annualized costs ($ per unit of treated source extent) Purchase and installation[a]	Operation and maintenance	Total
Middletown Works	Paved roads	2 Vacuum sweepers	mile	14.30	106	120
		Flusher	mile	1.34	117	118
	Unpaved roads	Coherex, distributor truck and storage tanks	mile	8.77	176	185
	Coal storage piles	Stationary water spray	acre	10.60	0.61	11.2
	Limestone and taconite piles	Water truck (1,500 gal. cap.)	acre	2.60	29.8	31.1
	Unpaved parking lots and exposed areas	Coherex	acre	NA	NA	NA
Houston Works	Paved roads	Broom sweeper No. 1	mile	4.05	73	77.1
		Broom sweeper No. 2	mile	4.50	64	68.5
		Flusher	mile	2.13	29	31.1
	Unpaved roads	Water truck	mile	2.49	34	36.5
	Main coal piles	Stationary water spray	acre	5.07	4	9.07
	Surge coal pile	Stationary water spray	acre	32.70	78	110
Burns Harbor	Lo-vol coal pile	Latex Binder	acre	N/A	N/A	N/A

[a] Not scaled to 1980 cost.

TABLE 5-7. OPEN DUST CONTROL COST COMPARISON IN DOLLARS PER UNIT OF ACTUAL SOURCE EXTENT

Plant	Source	Control	Unit of actual source extent	1980 Annualized costs ($ per year per unit of actual source extent) Purchase and installation	Operation and maintenance	Total
Middletown Works	Paved roads	2 Vacuum sweepers	mile	1,700	12,700	14,400
		Flusher	mile	400	3,370	3,770
	Unpaved roads	Coherex, distributor truck and storage tanks	mile	2,000	40,400	42,400
	Coal storage piles	Stationary water spray	acre	1,940	110	2,050
	Limestone and taconite piles	Water truck (1,500 gal. cap.)	acre	470	5,400	5,870
	Unpaved parking lots and exposed areas	Coherex	acre	NA	NA	NA
Houston Works	Paved roads	Broom sweeper No. 1	mile	240	4,460	4,700
		Broom sweeper No. 2	mile	270	3,900	4,170
		Flusher	mile	260	3,580	3,840
	Unpaved roads	Water truck	mile	260	3,580	3,840
	Main coal piles	Stationary water spray	acre	1,510	1,190	2,700
	Surge coal pile	Stationary water spray	acre	9,000	21,500	30,500
Burns Harbor	Lo-vol coal pile	Latex Binder	acre	N/A	N/A	N/A

[a] Not scaled to 1980 cost.

Control technique cost includes several components shown graphically in Figure 5-1. Purchase and installation costs must also include costs for freight, tax and borrowed money. The operation and maintenance costs should reflect increasing frequency of repair as the equipment ages along with increased costs for parts, energy and labor. Costs recovered from tax laws should also be considered. The slopes of the lines in Figure 5-1 have little significance except to show an increasing or decreasing cost with time. The slope of the loan interest tax deduction assumes the equipment was funded by a loan to be repaid on an installment basis beginning at the time of the loan. The equipment could have been funded by a bond program with bonds maturing at a variety of times causing the interest paid to increase, remain level, or decrease with time in a continuous or step fashion.

Cost-effectiveness also includes the emissions reduction achieved. Results from this study support the logical conclusion that the emissions reduction of a specific control technique decays with time until the technique finally yields no reduction over the uncontrolled state. This can be defined as the life of the control technique, not to be confused with the lifetime of the equipment.

The remaining portion of this section presents a simplified mathematical model for comparing the costs of one control technique with another. The question being asked determines the basis on which the cost should be compared. The following list presents six questions which can be asked:

1. Given a specific source at a specific plant and given a specific control technique, what is the most cost-effective number of applications that should be made?

2. Given a specific source at a specific plant and given a specific control technique, what is the cost to achieve a given emission reduction?

3. Given a specific source at a specific plant, what is the most cost-effective control technique that can be used?

4. Given a specific source at a specific plant, what is the least expensive control technique that can be used to achieve a given emission reduction?

5. Given a specific plant, what is the most cost-effective source that can be controlled?

6. Given a specific plant, what is the least expensive source which can be controlled to achieve a given emission reduction?

5.3.1 Cost-effectiveness Optimization Analysis

The answers to questions 1, 3 and 5 require an optimization analysis. The following simplified mathematical model can be used to answer questions 1, 3 and 5.

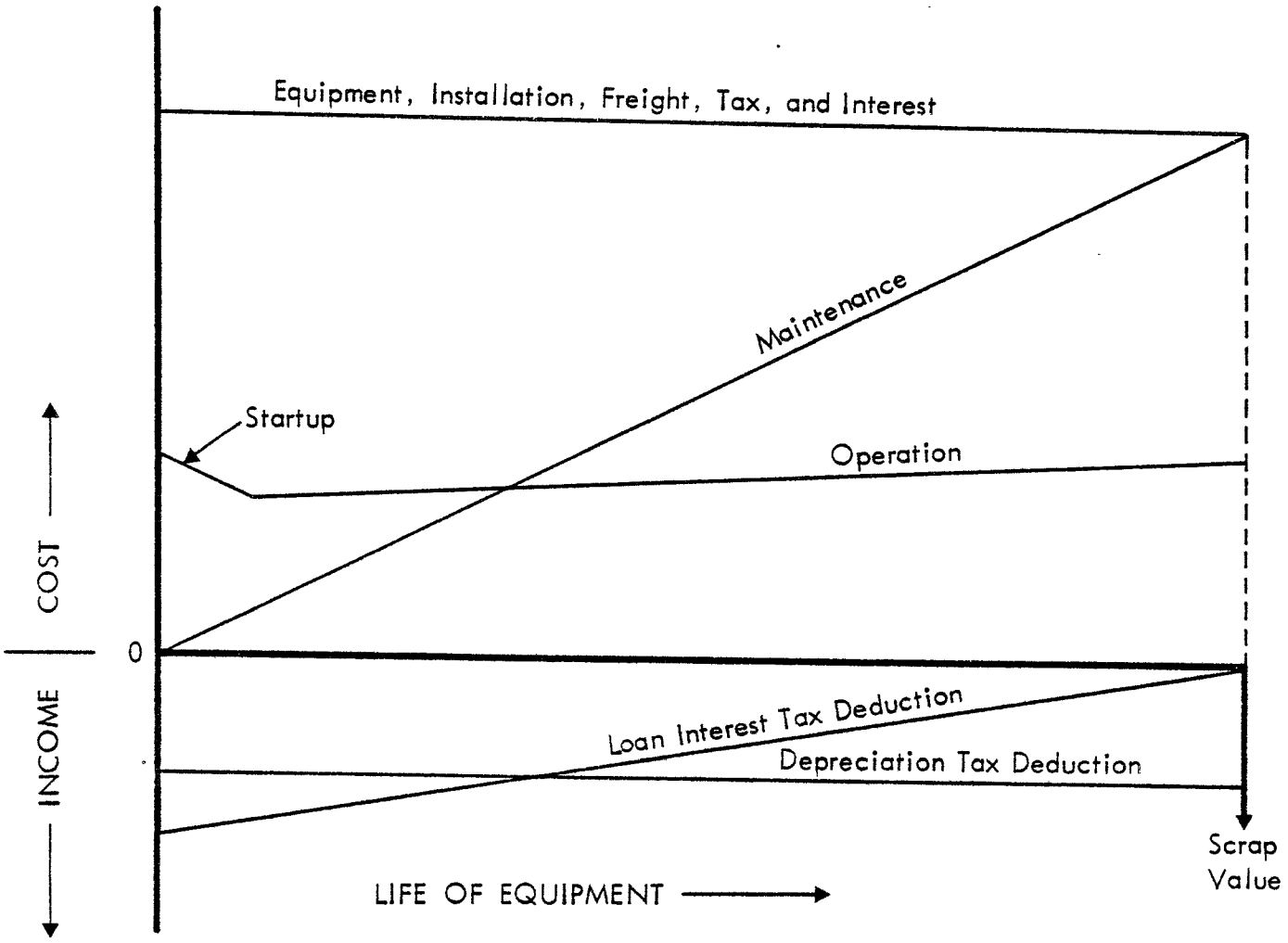

Figure 5-1. Graphical presentation of open dust control costs.

As shown above, the cost-effectiveness of any given combination of control technique, equipment and implementation plan for a given source at a given plant is:

$$CE = \frac{D}{ER}$$

where CE = cost-effectiveness ($/lb of emissions reduced)
D = control technique cost ($/yr)
ER = emissions reduction (lb of emissions reduced/yr)

The control technique cost can be written as follows

$$D = PI + MO$$

where PI = annual purchase and installation cost ($/yr)
MO = annual operating and maintenance cost ($/yr)

The annualized purchase and installation cost for a given device can be expressed

$$PI = \frac{IPT}{Y}$$

where IPT = total purchase and installation cost ($)

Y = estimated life of equipment (yr)

The annual operating cost can be expressed

$$MO = AMO \times TSE$$

where AMO = maintenance and operating cost per unit of treated source extent ($/unit of treated source extent)

TSE = treated source extent per year (units of treated source extent/yr)

The annual treated source extent is further dependent on the actual amount of source extent in the plant and the number of treatments per year:

$$TSE = ASE \times NT$$

where ASE = actual source extent in plant (units of source extent)

NT = number of treatments per year (treatment/yr)

The intial purchase and installation cost can also be dependent on the treated source extent as follows

$$IPT = UPT \times \frac{TSE}{MSE}$$

where UPT = initial purchase and installation cost per device ($/device)

MSE = maximum source extent which can be treated per device per year (units of treated source extent/device/yr)

The generalized expression for control technique cost can now be written as follows

$$D = \frac{UPT \times ASE \times NT}{Y \times MSE} + (AMO \times ASE \times NT)$$

All the parameters in the generalized expression for control technique cost can be fixed for a given technique and plant with the exception of the number of treatments per year which must be calculated. The lifetime of the device is assumed a constant in this analysis. The validity of this assumption is explored at the end of this analysis.

The number of treatments per year can be calculated if one knows the functional form for the decay of control efficiency for a given technique with time. The optimum number of treatments can then be calculated by minimizing the cost effectiveness for a given control technique.

Before minimizing the cost-effectiveness function, one first writes the generalized expression for emissions reduction which appears in the denominator of the cost effectiveness function. The emissions reduction can be expressed as follows

$$ER(t) = CEF(t) \times EF \times SE$$

where ER(t) = instantaneous emissions reduction as a function of time (lb/yr)

CEF(t) = control efficiency fraction as a function of days after application

EF = emission factor (lb/unit of source extent)

SE = source extent (units of source extent/yr)

The emission reduction can further be defined as

$$ER = EF \times SE \frac{\int_{o}^{365/NT} CEF(t)\, dt}{365/NT}$$

The cost-effectiveness function can now be minimized and the optimum number of applications per year calculated. It is obvious that if just emission reduction were to be maximized, an infinite number of treatments would be required. If just cost were to be minimized, then zero treatments per year would be required.

The minimization of CE which requires the optimum concentration of both cost and emission reduction can then be determined assuming

$$\frac{d\ (CE)}{d\ (NT)} = 0$$

Before the actual calculations to minimize CE can occur, the form of the control efficiency decay function must be determined. The following analyses consider 3 different forms of the control efficiency decay function: (1) linear decay (2) exponential decay, and (3) exponential followed by linear decay.

If it is assumed that the control efficiency fraction decays linearly from 1.0, then

$$CEF(t) = -bt + 1$$

and

$$ER = \frac{EF \times SE \times NT}{365} \int_{o}^{365/NT} (-bt + 1)\ dt$$

$$= \frac{EF \times SE \times NT}{365} \left(\frac{-b}{2} \left(\frac{365}{NT} \right)^2 + \frac{365}{NT} \right)$$

$$= EF \times SE \left(1 - \frac{b}{2} \frac{365}{NT} \right)$$

The cost-effectiveness function can then be written

$$CE = \frac{A\ (NT)}{EF \times SE \left(1 - \frac{b}{2} \frac{365}{NT} \right)}$$

where $A = \frac{UPT \times ASE}{Y \times MSE} + (AMO \times ASE)$

The value of NT which yields the minimum cost-effectiveness function can be derived as follows:

$$\frac{d\ (CE)}{d\ (NT)} = 0 = \frac{EF \times SE \left(1 - \frac{b}{2} \frac{365}{NT} \right) A - A(NT)(EF)(SE) \frac{b}{2} \frac{365}{NT^2}}{\left(EF \times SE \left(1 - \frac{b}{2} \frac{365}{NT} \right) \right)^2}$$

Solving for NT yields

$$A \times EF \times SE \frac{b}{2} \frac{365}{NT} = EF \times SE \left(1 - \frac{b}{2} \frac{365}{NT}\right) A$$

$$\frac{b}{2} \frac{365}{NT} = 1 - \frac{b}{2} \frac{365}{NT}$$

$$b \frac{365}{NT} = 1$$

$$NT = b \quad 365$$

Then the minimum cost-effectiveness function is

$$CE_{min} = \frac{A \quad 365 \quad b}{EF \quad \times \quad SE \left(1 - \frac{b}{2} \frac{365}{365b}\right)}$$

$$CE_{min} = \frac{365 \quad A \times b}{\frac{1}{2} \times \quad EF \times SE}$$

One interesting conclusion is that the most cost-effective approach will yield only a 50% reduction in emissions over the uncontrolled state. Another interesting conclusion is that the cost-effectiveness is minimized when the control technique efficiency is allowed to decay to zero. In order to prove this, define the lifetime of the technique (LT) as the time at which CEF = 0.

Then one may write

$$0 = -b \quad (LT) \quad + \quad 1$$

$$LT = \frac{1}{b} \quad (\text{days})$$

But the optimum time betewen applications is 365/NT = 1/b. Thus the optimum time between applications is the lifetime of the control technique and the optimum number of applications can be expressed

$$NT_{opt} = 365/LT$$

It is now assumed that the control efficiency decays exponentially from 1:

$$CEF(t) = e^{-bt}$$

The emissions reduced can be expressed as

$$ER = \frac{EF \times SE \times NT}{365} \int_{0}^{365/NT} e^{-bt}\, dt$$

$$= \frac{EF \times SE \times NT}{365} \left(-\frac{1}{b} \exp\ (-bt) \right]_{0}^{365/NT}$$

$$= \frac{EF \times SE \times NT}{365} \left(\frac{-1}{b} \exp\ (-b365/NT) + \frac{1}{b} \right)$$

The cost effectiveness function can then be written

$$\frac{A \times NT \times 365}{EF \times SE \times NT \left(\frac{-1}{b} \exp\ (-b365/NT) + \frac{1}{b} \right)}$$

The value of NT which yields the miminum cost-effectiveness function can then be derived as follows

$$\frac{d\ (CE)}{d\ (NT)} = 0 = \frac{A \times EF \times SE \times NT}{365} \left(-\frac{1}{b} \exp\ -\frac{b365}{NT} + \frac{1}{b} \right)$$

$$- A \times NT \frac{EF \times SE}{365} \left(-\frac{1}{b} NT \frac{(-b)\ 365}{-NT^2} e^{-b\ 365/NT} - \frac{1}{b} e^{-b\ 365/NT} + \frac{1}{b} \right)$$

$$\overline{\frac{EF \times SE \times NT}{365} \left(-\frac{1}{b} \exp \left(\frac{-b\ 365}{NT} \right) + \frac{1}{b} \right) \Bigg)^2}$$

Solving for NT yields

$$\frac{A \times NT \times EF \times SE}{365} - \left(\frac{1}{b} \left(\frac{1}{NT} \times b \times 365 + 1 \right) e^{-b\ 365/NT} + \frac{1}{b} \right) = \frac{A \times EF \times SE \times NT}{365} \times$$

$$\left(-\frac{1}{b} \exp \left(-\frac{b/365}{NT} \right) + \frac{1}{b} \right)$$

$$-\frac{1}{b} \frac{1}{NT} \times b \times 365\ e^{-b\ 365/NT} = 0$$

$$\frac{1}{NT} \exp\ (-b\ 365/NT) = 0$$

$$NT_{opt} = \infty$$

Since NT = ∞, there is no finite value of NT which yields a solution to this equation. This is because the control efficiency, when expressed as an exponential decay, never goes to zero. To put it another way, the control technique has an infinite lifetime. In order to circumvent this physical implausibility, assume that at some point in time called d, the functional

form of the decay changes to a straight line function with a slope equal to the slope of exponential decay function at t = d. The straight line function must also pass through (0, LT). The slope of the exponential decay function at time d is:

$$c = -be^{-bd}$$

The straight line function can then be defined as

$$CEF(t) = -be^{-bd}t + f$$

Therefore

$$f = be^{-bd}\ (LT)$$

Consequently,

$$CEF(t) = -be^{-bd}\ (t - LT)$$

Since the values of the CEF for both functions are identical at d, one may solve for d

$$e^{-bd} = -be^{-bd}\ (d - LT)$$

$$d = LT - \frac{1}{b}$$

Thus

$$CEF(t) = -be^{-b(LT) + 1}\ t + be^{-b(LT) + 1}\ (LT)$$

Therefore both functions comprising the decay function are defined when the decay constant, b, and the life of the control technique, LT, are known. For simplicity in the following solution, the following definitions will be used:

$$c = be^{1-b(LT)}$$

$$f = b(LT)e^{1-b(LT)}$$

$$d = LT - \frac{1}{b}$$

The equation for the emission reduction can then be written

$$ER = \frac{EF \times SE \times NT}{365} \int_o^d e^{-bt}dt + \int_d^{365/NT} (-\ ct + f)\ dt$$

$$= \frac{EF \times SE \times NT}{365} \quad - \frac{1}{b}\ e^{-bd} + \frac{1}{b} - \frac{c}{2}\ \left(\frac{365}{NT}\right)^2 + \frac{cd^2}{2} \qquad + f\ \frac{365}{NT} - fd$$

The cost-effectiveness function can now be written

$$CE = \frac{A\ (NT)}{\frac{EF \times SE \times NT}{365}\left(-\frac{1}{b}e^{-bd} + \frac{1}{b} - \frac{c}{2}\left(\frac{365}{NT}\right)^2 + \frac{cd^2}{2} + f\,\frac{365}{NT} - fd\right)}$$

The value of NT which minimizes the cost-effectiveness function can then be calculated as follows

$$\frac{d\ (CE)}{d(NT)} = 0 = \frac{-A\ \ -\left(\frac{c}{2}\ (365)^2\ (-2)\frac{1}{(NT^3)} - f\ 365\ \frac{1}{NT^2}\right)\ \frac{EF \times SE}{365}}{(ER/NT)^2}$$

or

$$f\ \frac{365}{NT^2} = c\ \frac{365^2}{NT^3}$$

Therefore

$$NT_{opt} = c\ \frac{365}{f}$$

Substitution of the definitions of c and f yields

$$NT_{opt} = \frac{b\ e^{1\ -\ b(LT)}\ \ 365}{b\ \ LT\ \ e^{1\ -\ b(LT)}}$$

$$NT_{opt} = \frac{365}{LT}$$

The minimum value of the cost-effectiveness for the case where the control efficiency decays first in an exponential and then in a linear fashion can be expressed as follows

$$CE_{min} = \frac{A\ \ \frac{365}{LT}}{\frac{EF \times SE \times \frac{365}{LT}}{365}\ \ -\frac{1}{b}\ e^{1\ -b(LT)} + \frac{1}{b} - \frac{b}{2}\ e^{1\ -\ b(LT)}\left(\frac{\frac{365}{365}}{LT}\right)^2 + \frac{b}{2}\ e^{1\ -\ b(LT)}\ \ LT - \frac{1}{b}\ \ ^2 + b(LT)\ e^{1\ -\ b(LT)}\ \frac{365}{\frac{365}{LT}} - b(LT)\ e^{1\ -\ b(LT)}\ (LT - \frac{1}{b})}$$

This reduces to

$$CE_{min} = \frac{A \times b \times 365}{EF \times SE\ (1 - 1/2 \exp\ (1 - b(LT)))}$$

From these analyses one can see that, in all three cases, the cost-effectiveness function is minimized when the control efficiency of the water or chemical is allowed to decay to zero. This is easily understood when one considers that a fixed amount of money is expended for each application of water or chemical dust suppressant. The most cost-effective approach is to gain all the emission reduction possible for this fixed expenditure. The maximum aggregate emission reduction occurs when the lifetime of the technique is reached. In other words, when the control efficiency equals zero, the maximum emission reduction has been gained and no further emission reduction will occur.

While the cost-effectiveness function is minimal at the lifetime of the control technique in all three cases, this does not mean that the value of the minimum cost-effectiveness function is identical in all three cases. Indeed, this value depends on all the costs related to the equipment, the slope or decay constant for the control efficiency function, the form of the control efficiency decay function, and the emissions from the source in the uncontrolled state. Consequently, while the user of these equations knows the most cost-effective number of applications to make for a given control, he should still use the appropriate equation for minimum cost-effectiveness to determine which combination of technique and equipment will yield the lowest minimum cost-effectiveness.

A second level of complexity can be introduced to this analysis by assuming that there are some fixed costs which are not dependent on the number of applications. In this case, the cost function can be written

$$D = B\ (NT) + g$$

where

g = fixed cost which are not dependent on the number of applications ($/yr)

This may occur, for example, when the equipment is already purchased and installed without regard for the optimum number of applications necessary. For this case, g equals the purchase and installation cost while B equals only the operating and maintenance cost. The cost-effectiveness function in this case can also be minimized but the minimum value will not be as low as the case where the size and number of the devices were also optimized.

It should be pointed out, however, that one never need purchase equipment without optimization in mind. Given the lifetime of a control technique, one can calculate the number of applications per year. Given the number of applications, one can calculate the total treated source extent per year (TSE). Then one can calculate the number of devices of given size that need to be purchased by dividing TSE by MSE (the maximum source extent that can be treated per device per year).

The life of the equipment Y can be calculated using the following equation

$$Y = \frac{SEL \times (TSE/MSE)}{TSE} = \frac{SEL}{MSE}$$

where SEL = source extent which can be treated over the lifetime of the device (units of source extent per device).

The term TSE/MSE represents the number of devices needed assuming full utilization. From the above equation, one can see that at full utilization, the lifetime of each device is a constant. Since this was the assumption in all the previous analyses, the previous calculations are applicable to the case of maximum utilization.

Substituting the above expression for the lifetime of the equipment into the previous expression for annual cost yields

$$D = \frac{UPT \times ASE \times NT}{SEL} + (AMO \times ASE \times NT)$$

For the case where one or more devices are desired at a utilization, e, which is less than 100%, the lifetime of the devices can be calculated as

$$Y = \frac{SEL \times (TSE/(e \times MSE))}{TSE} = \frac{SEL}{e \times MSE}$$

Again the lifetime of the devices is a constant and the previous analyses apply. The expression for the annual cost for this case is

$$D = \frac{UPT \times ASE \times NT}{SEL} + AMO \times ASE \times NT$$

One can see that the annual cost is identical whether or not maximum utilization occurs. At less than maximum utilization, more devices are required but each one lasts longer, thus yielding the same annual cost.

Finally, consider a limiting case in which one device can accomplish the job at less than maximum utilization. The lifetime of this single device can be calculated as follows:

$$Y = \frac{SEL \times (TSE/(e \times MSE))}{TSE}$$

However, it is known that in this case

$$TSE = e \times MSE$$

Therefore

$$Y = \frac{SEL}{TSE} \quad .$$

Substituting this expression in the equation for annual cost yields

$$D = \frac{UPT \times (TSE/(e \times MSE))}{SEL/TSE} + AMO \times ASE \times NT$$

which reduces to

$$D = \frac{UPT \times ASE \times NT}{SEL} + AMO \times ASE \times NT$$

Again, this is the same expression for annual cost as when several devices were selected at maximum and less than maximum utilization. Assuming that all three of these options were applied to the same job (TSE = constant), we can see that in the first two cases, the annual cost would be identical, but in the third case, the single device would have to be larger or faster in order to accomplish the same job for which many devices were required. This implies that UPT, SEL, and AMO would probably differ. Using the minimum cost-effectiveness equation for a linear decay in control efficiency, one can see that for control of a given source at a given plant, cost is minimized when the value of (UPT/SEL) + AMO is a minimum. Cost-effectiveness is minimized when the value of b(UPT/SEL + AMO) is a minimum.

In conclusion, the cost-effectiveness equations developed in this section can be used in analyzing costs for a single control technique and for comparing costs of various alternative control techniques for a given plant and source. The equations can also be used to compare the same control technique at two different plants. In the first case, the equations indicate that cost should be compared on the basis of dollars per unit of source extent treated. In the second case, the cost should be compared on the basis of dollars per actual unit of source extent in the plant. However, while cost comparisons are informative, it is the cost-effectiveness values which are most important in terms of decisions about which open dust control technique is best.

5.3.2 Minimum Cost Calculations

The answer to questions 2, 4 and 6 listed in Section 5.3 do not require an optimization analysis, but rather require only a simple calculation. The following analysis shows how to determine the least expensive control technique to achieve a given emission reduction from a given source.

The cost-effectiveness function for control of open dust emissions from a given source at a given plant is:

$$CE = \frac{D}{ER}$$

where: ER = fixed value of desired emission reduction (T/yr).

From previous analyses, the cost per year can be expressed:

$$D = \frac{UPT \times ASE \times NT}{Y \times MSE} + (AMO \times ASE \times NT)$$

Since the emission reduction is fixed in this particular problem, the number of applications necessary to achieve that reduction can be calculated from the following equation:

$$ER = EF \times SE \times \frac{\int_{o}^{365/NT} CEF(t)\, dt}{365/NT}$$

For the case where the control efficiency fraction decays linearly from 1.0, the emission reduction is:

$$ER = EF \times SE \times (1 - \frac{b}{2} \frac{365}{NT})$$

The number of applications per year necessary to achieve a given reduction can then be expressed:

$$NT = \frac{b}{2} \times 365 \times (1 - \frac{ER}{EF \times SE})$$

Then the expression for the dollars expended per year is:

$$D = \frac{UPT \times ASE}{Y \times MSE} + (AMO \times ASE) \times \frac{b}{2} \times 365 \times (1 - \frac{ER}{EF \times SE})$$

Thus, for all control techniques with a linear decay in control efficiency, the cost to achieve a given emission reduction can be calculated for each control technique using the above equation. The most cost-effective technique is then the one with the lowest total annual cost (D).

SECTION ~~7.0~~ 6.0

REFERENCES

1. Bohn, R., T. Cuscino, Jr., and C. Cowherd, Jr. Fugitive Emissions from Integrated Iron and Steel Plants. EPA-600/2-78-050, U.S. Environmental Protection Agency, Research Triangle Park, North Carolina, March 1978. 276 pp.

2. Cowherd, Chatten, Jr., Russel Bohn, and Thomas Cuscino, Jr. Iron and Steel Plant Open Source Fugitive Emission Evaluation. EPA-600/2-79-103, U.S. Environmental Protection Agency, Research Triangle Park, North Carolina, May 1979. 139 pp.

3. Cowherd, C., Jr., C. M. Maxwell, and D. W. Nelson. Quantification of Dust Entrainment from Paved Roads. EPA-450/3-77-027, U.S. Environmental Protection Agency, Research Triangle Park, North Carolina, July 1977. 89 pp.

4. Cowherd, C., Jr., K. Axetell, Jr., C. M. Guenther (Maxwell), and G. Jutze. Development of Emission Factors for Fugitive Dust Sources. EPA-450/3-74-037, U.S. Environmental Protection Agency, Research Triangle Park, North Carolina, June 1974. 190 pp.

5. Cuscino, T., Jr. Taconite Mining Fugitive Emissions Study. Final Report, Midwest Research Institute for Minnesota Pollution Control Agency, June 7, 1979.

6. Bohn, R, T. Cuscino, Jr., D. Lane, F. Pendleton, and R. Hackney. Dust Control for Haul Roads. U.S. Bureau of Mines, Minneapolis, Minnesota, February 1981.

7. Gillette, D. Tests with a Portable Wind Tunnel for Determining Wind Erosion Threshold Velocities. Atmospheric Environment, 12:2309 (1978).

8. Soo, S. L., J. C. Perez, and S. Rezakhany. Wind Velocity Distribution Over Storage Piles and Use of Barriers. Proceedings: Symposium on Iron and Steel Pollution Abatement Technology for 1980 (Philadelphia, Nov., 1980), EPA-600/9-81-017, U.S. Environmental Protection Agency, Research Triangle Park, North Carolina, March 1981.

9. Davies, C. N. The Entry of Aerosols in Sampling Heads and Tubes. British Journal of Applied Physics, 2:921 (1968).

SECTION ~~8.0~~ 7.0

GLOSSARY

Activity Factor - Measure of the intensity of aggregate material disturbance by mechanical forces in relation to reference activity level defined as unity.

Application Frequency - Number of applications of a control measure to a specific source per unit time; equivalently, the inverse of time between two applications.

Application Intensity - Volume of water or chemical solution applied per unit area of the treated surface.

Control Efficiency - Percent decrease in controlled emissions from the uncontrolled state.

Cost-Effectiveness - The cost of control per unit mass of reduced particulate emissions.

Dilution Ratio - Ratio of the number of parts of chemical to the number of parts of solution, expressed in percent (e.g., one part of chemical to four parts of water corresponds to a 20% solution).

Dry Day - Day without measurable (0.01 in. or more) precipitation.

Dry Sieving - The sieving of oven-dried aggregate by passing it through a series of screens of descending opening size.

Duration of Storage - The average time that a unit of aggregate material remains in open storage, or the average pile turnover time.

Dust Suppressant - Water or chemical solution which, when applied to an aggregate material, binds suspendable particulate to larger particles.

Erosion Potential - Total quantity of erodible particles, in any size range, present on the surface (per unit area) prior to the onset of erosion.

Exposed Area, Effective - The total exposed area reduced by an amount which reflects the sheltering effect of buildings and other objects that retard the wind.

Exposed Area, Total - Outdoor ground area subject to the action of wind and protected by little or no vegetation.

Exposure - The point value of the flux (mass/area-time) of airborne particulate passing through the atmosphere, integrated over the time of measurement.

Exposure, Integrated - The result of mathematical integration of spatially distributed measurements of airborne particulate exposure downwind of a fugitive emissions source.

Exposure Profiling - Direct measurement of the total passage of airborne particulate immediately downwind of the source by means of simultaneous multipoint isokinetic sampling over the effective cross-section of the emissions plume.

Exposure Sampler - Directional particulate sampler with settling chamber and backup filter, having variable flow control to provide for isokinetic sampling at wind speeds of 1.8 to 8.9 m/s (4 to 20 mph).

Friction Velocity - A measure of wind shear stress on an exposed surface as determined from the slope of the logarithmic velocity profile near the surface.

Fugitive Emissions - Emissions not originating from a stack, duct, or flue.

Load-in - The addition of material to a storage pile.

Load-out - The removal of material from a storage pile.

Materials Handling - The receiving and transport of raw, intermediate and waste materials, including barge/railcar unloading, conveyor transport and associated conveyor transfer and screening stations.

Moisture Content - The mass portion of an aggregate sample consisting of unbound moisture as determined from weight loss in oven drying.

Normalization - Procedure that ensures that emission reductions not attributable to a control measure are excluded in determining an efficiency of control.

Particle Diameter, Aerodynamic - The diameter of a hypothetical sphere of unit density (1 g/cm^3) having the same terminal settling velocity as the particle in question, regardless of its geometric size, shape and true density.

Particle Drift Distance - Horizontal distance from point of particle injection into the atmosphere to point of removal by contact with the ground surface.

Particulate, Fine - Airborne particulate smaller than 2.5 μm in aerodynamic diameter.

Particulate, Inhalable - Airborne particulate smaller than 15 μm in aerodynamic diameter.

Particulate, Total - All airborne particulate regardless of particle size.

Particulate, Total Suspended - Airborne particulate matter as measured by a standard high-volume (hi-vol) sampler.

Precipitation-Evaporation Index - A climatic factor equal to 10 times the sum of 12 consecutive monthly ratios of precipitation in inches over evaporation in inches, which is used as a measure of the annual average moisture of exposed material on a flat surface of compacted aggregate.

Precision Factor (two standard deviations) - The precision factor (f) for an emission factor equation is defined such that the 95% confidence interval for a predicted emission factor value (P) extends from P/f to Pf; the precision factor is determined by exponentiating twice the standard deviation of the differences between the natural logarithms of the predicted and observed emission factors.

Road, Paved - A roadway constructed of rigid surface materials, such as asphalt, cement, concrete, and brick.

Road, Unpaved - A roadway constructed of nonrigid surface materials such as dirt, gravel (crushed stone or slag), and oil and chip surfaces.

Road Surface Dust Loading - The mass of loose surface dust on a paved roadway, per length of roadway, as determined by dry vacuuming.

Road Surface Material - Loose material present on the surface of an unpaved road.

Roughness Height - A measure of the roughness of an exposed surface or storage pile as determined from the y-intercept of the logarithmic velocity profile near the surface.

Silt Content - The mass portion of an aggregate sample smaller than 75 micrometers in diameter as determined by dry sieving.

Source, Open Dust - Any source from which emissions are generated by the forces of wind and machinery acting on exposed aggregate materials.

Spray System - A device for applying a liquid dust suppressant in the form of droplets to an aggregate material for the purposes of controlling the generation of dust.

Storage Pile Activities - Processes associated with aggregate storage piles, specifically, load-in, vehicular traffic around storage piles, wind erosion from storage piles, and load-out.

Surface Erodibility - Potential for wind erosion losses from an unsheltered area, based on the percentage of erodible particles (smaller than 0.85 mm in diameter) in the surface material.

Surface Stabilization - The formation of a resistive crust on an exposed aggregate surface through the action of a dust suppressant, which suppresses the release of otherwise suspendable particles.

Vehicle, Heavy-Duty - A motor vehicle with a gross vehicle travelling weight exceeding 30 tons.

Vehicle, Light-Duty - A motor vehicle with a gross vehicle travelling weight of less than or equal to 3 tons.

Vehicle, Medium-Duty - A motor vehicle with a gross vehicle travelling weight of greater than 3 tons, but less than 30 tons.

Windbreak - A natural or man-made object which reduces the ambient wind speed in the immediate locality.

SECTION 8.0

ENGLISH TO METRIC UNIT CONVERSION TABLE

English unit	Multiplied by	Metric unit
gal/yd^2	4.53	ℓ/m^2
lb/T	0.500	kg/t
lb/vehicle mile	0.282	kg/vehicle km
lb/acre yr	112	kg/km^2 year
lb	0.454	kg
T	0.907	t
mph	0.447	m/s
mile	1.61	km
ft	0.305	m
acre	0.00405	km^2

APPENDIX A

DATA COMPILATION FROM MATERIALS HANDLING FLOW CHARTS

Tables A-1 through A-10 summarize material handling operations for raw and intermediate materials at the 10 surveyed plants. Table A-11 summarizes slag handling operations at the 10 surveyed plants.

TABLE A-1. RAW AND INTERMEDIATE MATERIAL HANDLING AT THE ARMCO MIDDLETOWN PLANT IN 1978

Material	Handling method and amount of material handled							
	Origination mode	Transfer stations	Storage load-in	Storage	Storage load-out	Transfer stations	Screening	Crushing
Coal	Railcar unloading by rotary dump (1,423,000 ST)	1 transfer station (2,057,000 ST)	Conveyor stacker (1,234,000 ST)	Open storage (1,234,000 ST)	Bucket wheel reclaimer onto conveyor (1,234,000 ST)	2 transfer stations (1,423,000 ST)	Screening (2,057,000 ST)	
	Railcar unloading by bottom dump (634,000 ST)					1 transfer station (634,000 ST)		Breaker and Hammer Mill (634,000 ST)
Coke	Coke ovens (1,460,000 ST)	1 transfer station (1,007,000 ST)	None	None	None	1 transfer station (after screening)	Screening (1,460,000 ST)	None
Iron Ore Pellets	Railcar unloading by rotary dump (1,508,000 ST)	2 transfer stations (1,508,000 ST)	Clamshell bucket (1,508,000 ST)	Open storage pile (1,508,000 ST)	Clamshell bucket to conveyor (1,508,000 ST)	2 transfer stations (1,357,000 ST)	Screening and 3 transfer stations (1,357,000 ST)	None
Unagglomerated Iron Ore	Railcar unloading by rotary dump (14,000 ST)	2 transfer stations (14,000 ST)	Clamshell bucket (14,000 ST)	Open storage pile (14,000 ST)	Clamshell bucket to conveyor (14,000 ST)	None	None	None
Limestone/Dolomite/ gravel	Railcar unloaded by bottom dump to conveyor to stock house bins (228,000 ST)	None	None	None	None	None	None	None
Sinter	Sinter plant (566,000 ST)	1 transfer station (566,000 ST)	Conveyor stacker (17,000 ST)	Open storage (17,000 ST)	Clamshell bucket to conveyor (17,000 ST)	2 transfer stations (566,000 ST)	Screening and 3 transfer stations (566,000 ST)	None
			Conveyor to bins (549,000 ST)	Bins (549,000 ST)	Bins to conveyor (549,000 ST)			
Sinter Input (e.g., flux, iron ore and coke fines)	Railcar unloading by bottom dump (239,000 ST)	None	Clamshell bucket (48,000 ST)	Open storage pile (346,000 ST)	Front end loader to conveyor (346,000 ST)	2 transfer stations (585,000 ST)	None	None
	Undersized material from screening and crushing (608,000 ST)		Truck dump (298,000 ST)					
	Truck (346,000 ST)							

TABLE A-2. RAW AND INTERMEDIATE MATERIAL HANDLING AT THE ARMCO HOUSTON PLANT IN 1978[a]

Material	Handling method and amount of material handled						
	Origination mode	Transfer stations	Storage load-in	Storage	Storage load-out	Transfer stations	Screening
Coal	Barge unloaded by clamshell (445,000 ST)	2 transfer stations (445,000 ST)	Conveyor stacker (445,000 ST)	Open storage (445,000 ST)	Crane-clamshell bucket transfer to conveyor (445,000 ST)	4 transfer stations (445,000 ST)	None
Coke	Railcar unloaded by side dump (100,000 ST)	2 transfer stations (100,000 ST)	Conveyor stacker (100,000 ST)	Open storage (100,000 ST)	Crane-clamshell bucket transfer to conveyor (100,000 ST)	4 transfer stations (383,000 ST)	Screened - 94% to coke ovens; 6% to sinter plant
Iron Ore Pellets	Barge unloaded by clamshell (578,000 ST)	2 transfer stations (578,000 ST)	Conveyor stacker (578,000 ST)	Open storage (578,000 ST)	Crane-clamshell bucket transfer to conveyor (578,000 ST)	2 transfer stations (578,000 ST)	None
Unagglomerated Iron Ore	Barge unloaded by clamshell (18,300 ST)	2 transfer stations (18,300 ST)	Conveyor stacker (18,300 ST)	Open storage (18,300 ST)	Crane-clamshell bucket transfer to conveyor (18,300 ST)	2 transfer stations (18,300 ST)	None
Limestone/ Dolomite	Railcar unloaded by bottom dump (62,300 ST)	2 transfer stations (62,300 ST)	Conveyor stacker (37,400 ST)	Open storage (37,400 ST)	Crane-clamshell bucket transfer to conveyor (37,400 ST)	2 transfer stations (62,300 ST)	None
Sinter, Nodules and Briquettes	Sinter plant (257,000 ST)	None	Conveyor stacker (257,000 ST)	Open storage (257,000 ST)	Crane-clamshell bucket transfer to conveyor (257,000 ST)	None	None
Sinter Input (Flux, Iron Ore and Coke Fines)	Barge unloaded by clamshell (119,000 ST) Undersized material from screening and crushing (194,000 ST)	2 transfer stations (313,000 ST)	Conveyor stacker (313,000 ST)	Open storage (313,000 ST)	Bucket-wheel reclaimer onto underground conveyor (313,000 ST)	2 transfer stations (313,000 ST)	None

[a] Coke plant was down most of 1978, so coal and coke data are listed for 1979.

TABLE A-3. RAW AND INTERMEDIATE MATERIAL HANDLING AT THE INTERLAKE CHICAGO PLANT IN 1978

	Handling method and amount of material handled						
Material	Origination mode	Transfer stations	Storage load-in	Storage	Storage load-out	Transfer stations	Screening
Coal	Truck unloaded (26,000 ST) Railcar unloaded by rotary dump (495,000 ST)	9 transfer stations ending in bin storage (521,000 ST)	Bin to scraper to open storage pile (495,000 ST)	Open storage pile (505,000 ST)	Scraper (521,000 ST)	21 transfer stations (521,000 ST)	None
Coke	Coke ovens (345,000 ST)	2 transfer stations (345,000 ST)	Conveyor stacker (17,000 ST)	Open storage pile (17,000 ST)	Front-end loader; dump into conveyor hopper/feeder (17,000 ST)	2 transfer stations (345,000 ST)	Screened - 90% to coke oven; 10% to sinter plant (345,000 ST)
Iron Ore Pellets	Ship unloaded by clamshell (1,203,000 ST)	None	Same clamshell used to unload ships (1,203,000 ST)	Open storage pile (1,203,000 ST)	Bucket wheel reclaimer onto underground conveyor (1,203,000 ST)	2 transfer stations (1,203,000 ST)	None
Dolomite	Truck unloaded at storage pile (35,300 ST)	None	Same truck used to deliver material to plant (35,300 ST)	Open storage pile (35,300 ST)	Crane-clam-shell bucket transfer to conveyor (35,000 ST)	2 transfer stations (35,300 ST)	None
Limestone	Ship unloaded by clamshell (123,000 ST)	None	Same clamshell used to unload ships (123,000 ST)	Open storage pile (123,000 ST)	Crane-clam-shell bucket transfer to conveyor (123,000 ST)	2 transfer stations (123,000 ST)	None
Sinter, Nodules and Briquette	Sinter Plant (302,000 ST)	1 transfer station (302,000 ST)	None	None	None	15 transfer stations (362,000 ST)	Screened - 82% to blast furnace; 18% recycled (272,000 ST)
Sinter Input (Flux, Iron Ore and Coke Fines)	Truck unloaded at storage pile (398,000 ST)	2 transfer stations (199,000 ST)	Same truck used to deliver mate-rial to plant (199,000 ST) Conveyor stacker (199,000 ST)	Open storage pile (498,000 ST)	Front-end loader dump into conveyor (398,000 ST)	3 transfer stations (398,000 ST)	None

TABLE A-4. RAW AND INTERMEDIATE MATERIAL HANDLING AT THE BETHLEHEM STEEL BURNS HARBOR PLANT IN 1978[a]

Material	Handling method and amount of material handled						
	Origination mode	Transfer stations	Storage load-in	Storage	Storage load-out	Transfer stations	Screening
Coal	Rotary dump of rail-car onto underground conveyors (2,046,000 ST)	6 conveyor transfer stations (2,046,000 ST)	Stacker into pile (2,046,000 ST)	Open storage pile (2,046,000 ST)	Bucket wheel reclaimer (2,046,000 ST)	2 Conveyor transfer stations (2,046,000 ST)	None
Coke (Produced in Plant)	Coke Ovens (1,493,000 ST)	2 conveyor transfer stations to screening station (1,493,000 ST)	Truck to storage pile (98,000 ST) Conveyor (1,305,000 ST) Coke breeze hauled off-site (18,000 ST) Nut coke hauled off-site (72,000 ST)	Open storage pile (98,000 ST) Conveyor (1,305,000 ST)	Front-end loader to conveyor (98,000 ST) Conveyor (1,305,000 ST)	3 conveyor transfer stations (1,403,000 ST)	Screening (1,403,000 ST)
Coke (Purchased)	Barge (338,000 ST) Rotary dump of rail-car (167,000 ST)	5 conveyor transfer stations (505,000 ST)	Stacker into pile (505,000 ST)	Open storage pile (505,000 ST)	Bucket wheel reclaimer onto conveyor (505,000 ST)	3 conveyor stations (505,000 ST)	Screening (505,000 ST)
Iron Ore Pellets	Barge to clamshell (865,000 ST) Barge to bucket-ladder conveyor (4,221,000 ST)	6 conveyor transfer stations (5,086,000 ST)	Stacker into pile (5,086,000 ST)	Open storage pile (5,086,000 ST)	Bucket wheel reclaimer to conveyor (5,086,000 ST)	3 conveyor transfer stations (5,086,000 ST)	Screening (5,086,000 ST)
Sinter	Sinter plant (1,835,000 ST)	9 conveyor transfer stations (1,835,000 ST)	Enclosed conveyor (1,652,000 ST) Stacker into pile (183,000 ST)	Enclosed conveyor (1,652,000 ST) Open storage pile (183,000 ST)	Enclosed conveyor (1,652,000 ST) Bucket wheel reclaimer onto conveyor (183,000 ST)	Enclosed conveyor (1,652,000 ST) 3 conveyor transfer stations (183,000 ST)	Screening (1,835,000 ST)
Limestone/Dolomite	Barge (11,000 ST)	5 conveyor transfer stations (11,300 ST)	Stacker into pile (11,300 ST)	Open storage pile (11,300 ST)	Bucket wheel reclaimer onto conveyor (11,300 ST)	3 conveyor transfer stations (11,300 ST)	None
Sinter Plant (Slag fines)	Levy (385,000 ST)	Hauled by truck to material hauling storage pile (385,000 ST)	Dumped by truck (385,000 ST)	Open storage pile (385,000 ST)	Bucket wheel reclaimer onto above-ground conveyor (385,000 ST)	3 conveyor transfer stations (385,000 ST)	None

TABLE 4. (continued)

Material	Handling method and amount of material handled						
	Origination mode	Transfer stations	Storage load-in	Storage	Storage load-out	Transfer stations	Screening
Sinter Plant (Slag fines) (continued)	Sinter mix bedding plant (385,000 ST)	3 conveyor transfer stations (385,000 ST)	Mobile or stationary stacker into pile (385,000 ST)	Open storage pile (385,000 ST)	Bucket wheel reclaimer onto above-ground conveyor (385,000 ST)	4 conveyor transfer stations (385,000 ST)	None
Sinter Plant Input (Coke Breeze)	From outside vendor (69,000 ST)	Transport by truck (69,000 ST)	Transport by truck (1,380 ST)	Transport by truck (1,380 ST)	Dumped by truck into conveyor bin (1,380 ST)	5 transfer stations (69,000 ST)	None
Sinter Plant Input (Dolomite)	Barge (291,000 ST)	5 conveyor transfer stations (291,000 ST)	Mobile or stationary stacker into pile (291,000 ST)	Open storage pile (291,000 ST)	Bucket wheel reclaimer onto above-ground conveyor (291,000 ST)	3 transfer stations	None
	Sinter mix bedding surge bin (291,000 ST)	2 transfer stations (291,000 ST)	Enclosed conveyor (291,000 ST)	Enclosed conveyor (291,000 ST)	Enclosed conveyor (291,000 ST)	Enclosed conveyor (291,000 ST)	None
Sinter Plant Input (Calcite)	Barge (169,000 ST)	5 transfer stations (169,000 ST)	Mobile or stationary stacker pile (169,000 ST)	Open storage pile (169,000 ST)	Bucket wheel reclaimer onto above-ground conveyor (169,000 ST)	3 transfer stations	None
	Sinter mix bedding plant (169,000 ST)	3 transfer stations (169,000 ST)	Mobile or stationary stacker onto pile (169,000 ST)	Open storage pile (169,000 ST)	Bucket wheel reclaimer onto above-ground conveyor (169,000 ST)	4 transfer stations (169,000 ST)	None
Sinter Plant Input (Mill Scale)	Purchased by outside vendor and generated in plant by hot forming and rolling operations (267,000 ST)	Transport by truck (267,000 ST)	Transport by truck (13,350 ST) Truck dump onto pile (253,650 ST)	Transport by truck (13,350 ST) Open storage pile (253,650 ST)	Dumped by truck into conveyor bin (3,350 ST) Front-end loader dump into conveyor bin (253,650 ST)	Conveyor transfer station (267,000 ST)	Screening (267,000 ST)
	Sinter mix bedding plant surge bin (267,000 ST)	3 transfer stations (267,000 ST)	Mobile or stationary stacker into pile (267,000 ST)	Open storage pile (267,000 ST)	Bucket wheel reclaimer onto above-ground conveyor (267,000 ST)	4 transfer stations (267,000 ST)	None

TABLE 4. (concluded)

Material	Handling method and amount of material handled						
	Origination mode	Transfer stations	Storage load-in	Storage	Storage load-out	Transfer stations	Screening
Sinter Plant Input (Purchased Iron Ore Fines)	Barge (1,121,000 ST)	5 transfer stations (1,121,000 ST)	Mobile or stationary stacker into pile (1,121,000 ST)	Open storage pile (1,121,000 ST)	Bucket wheel reclaimer onto above-ground conveyor (1,121,000 ST)	3 transfer stations (1,121,000 ST)	None
	Sinter mix bedding plant (1,121,000 ST)	3 transfer stations (1,121,000 ST)	Mobile or stationary stacker into pile (1,121,000 ST)	Open storage pile (1,121,000 ST)	Bucket wheel reclaimer onto above-ground conveyor (1,121,000 ST)	4 transfer stations (1,121,000 ST)	None
Sinter Plant Input (Iron Ore and Sinter Fines Generated at Plant)	Blast furnace stockhouses (375,000 ST)	Conveyor transfers (375,000 ST)	Transport by truck (37,500 ST) Truck dump onto pile (337,500 ST)	Transport by truck (37,500 ST) Open storage pile (337,500 ST)	Dumped by truck into conveyor bin (37,500 ST) Front-end loader; dump into conveyor bin (337,500 ST)	3 transfer stations (375,000 ST) (375,000 ST)	None
	Sinter mix bedding plant (375,000 ST)	3 transfer stations (375,000 ST)	Mobile or stationary stacker onto pile (375,000 ST)	Open storage pile (375,000 ST)	Bucket wheel reclaimer onto above-ground conveyor (375,000 ST)	4 transfer stations (375,000 ST)	None
Sinter Plant Input (Blast FCE. Flue Dust/Filter Cake)	Blast FCE, gas cleaning systems (193,000 ST)	Transport by (193,000 ST)	Dumped by truck onto storage pile (193,000 ST)	Open storage pile (193,000 ST)	Loaded into truck with front-end loader (193,000 ST)	Transport by truck (193,000 ST)	None
	From stock pile (193,000 ST)	Transport by truck (193,000 ST)	Truck dump onto pile (193,000 ST)	Open storage pile (193,000 ST)	Bucket wheel reclaimer onto above-ground conveyor (193,000 ST)	3 transfer stations (193,000 ST)	None
	Sinter mix bedding plant (193,000 ST)	3 transfer stations (193,000 ST)	Mobile or stationary stacker onto pile (193,000 ST)	Open storage pile (193,000 ST)	Bucket wheel reclaimer onto above-ground conveyor (193,000 ST)	4 transfer stations	None

[a] Due to coal strike in 1978 and the resultant nonrepresentative handling methods, these data are for 1979.

TABLE A-5. RAW AND INTERMEDIATE MATERIAL HANDLING AT THE BETHLEHEM STEEL'S SPARROWS POINT PLANT IN 1978

Material	Handling method and amount of material handled						
	Origination mode	Transfer stations	Storage load-in	Storage	Storage load-out	Transfer stations	Screening
Coal[a]	Barge unloaded via clamshell (3,334,000 ST)	5 transfer stations (3,334,000 ST)	Conveyor stacker (3,334,000 ST)	Open storage pile (3,334,000 ST)	Front end loader to conveyors (3,334,000 ST)	7 transfer stations (3,334,000 ST)	Screening (3,334,000 ST)
Coke	Coke Ovens (2,366,000 ST) Vessels (203,000 ST)	6 transfer stations (82,000 ST)	Trucks to open storage pile to truck to bins (385,000 ST) Conveyor stacker to bins (2,184,000 ST)	Bins (2,569,000 ST)	Bins to conveyors (2,569,000 ST)	None	Screening (2,569,000 ST)
Iron Ore Pellets	Vessels (3,253,000 ST)	5 transfer stations (3,253,000 ST)	Conveyor stacker (3,253,000 ST)	Open storage pile (3,253,000 ST)	Bucket wheel reclaimer (3,253,000 ST)	8 transfer stations	Screening (3,253,000 ST)
Unagglomerated Iron Ore	Barge unloaded via clamshell (2,467,000 ST)	5 transfer (2,467,000 ST)	Conveyor stacker (2,467,000 ST)	Open storage Pile (2,467,000 ST)	Bucket wheel reclaimer (2,467,000 ST)	9 transfer stations (2,467,000 ST)	Screening (2,467,000 ST)
Revert Material[b]	Sinter plant and screening operations to trucks (896,000 ST)	None	Truck to front-end loader to open storage pile (896,000 ST)	Open storage pile (896,000 ST)	Bucket wheel reclaimer (896,000 ST)	9 transfer stations (896,000 ST)	Screening (896,000 ST)
Gravel	Truck (85,800 ST)	None	Truck dump to open storage pile (85,800 ST)	Open storage pile (85,800 ST)	Clamshell to conveyors (85,500 ST)	9 transfer stations (85,800 ST)	None
Sinter Input (Limestone as flux)	Railcar unloaded via bottom dump (651,000 ST)	6 transfer stations	Conveyor to bins to conveyor stacker to open storage pile (651,000 ST)	Open storage pile (651,000 ST)	Bucket wheel reclaimer (651,000 ST)	9 transfer stations (651,000 ST)	None

TABLE 5. (concluded)

Material	Handling method and amount of material handled						
	Origination mode	Transfer stations	Storage load-in	Storage	Storage load-out	Transfer stations	Screening
Sinter Input (Coke fines)	Truck (210,240 ST)	9 transfer stations (210,240 ST)	Crusher to bedding/blending plant then by stacker into pile (52,560 ST)	Open storage pile (52,560 ST)	Conveyor transfer station (52,560 ST) Crusher to Transfer stations (157,680 ST)	9 transfer stations to sinter plant bins (210,240 ST)	None
Sinter	Truck (3,299,000 ST)	6 transfer stations (3,299,000 ST)	Stacker into pile (66,000 ST)	Open storage pile (66,000 ST)	Clamshell to conveyor to bin (66,000 ST) Truck to bin (3,233,000 ST)	10 transfer stations (3,299,000 ST)	Screening (2,425,000 ST)

[a] Due to coal strike in 1978, these data are for 1979.
[b] Includes mill scale, pellet fines, sinter fines, control device catch, steelmaking slag and screened metallics.

TABLE A-6. RAW AND INTERMEDIATE MATERIAL HANDLING AT THE GREAT LAKES STEEL DIVISION OF NATIONAL STEEL CORPORATION IN 1978

	Handling method and amount of material handled						
Material	Origination mode	Transfer stations	Storage load-in	Storage	Storage load-out	Transfer stations	Screening
Coke	Coke ovens (1,780,000 ST)	5 transfer stations (498,000 ST)	None	None	None	None	Screened (1,780,000 ST)
Coal	Barge unloaded by clamshell (1,986,000 ST)	2 transfer stations (1,986,000 ST)	Conveyor stacker (1,986,000 ST)	Open storage pile (2,207,000 ST)	Front end loader to conveyor (993,000 ST)	1 transfer station (2,207,000 ST)	None
	Railcar unloaded by rotary dump (221,000 ST)	1 transfer station (221,000 ST)	Front end loader (221,000 ST)		Clamshell bucket (1,214,000 ST)		
Iron Ore Pellets	Barge unloaded by clamshell (2,067,000 ST)	5 transfer stations (467,000 ST)	Same clamshell that unloaded barge (2,067,000 ST)	Open storage pile (3,334,000 ST)	Front end loader to conveyor (467,000 ST)	5 transfer stations (1,867,000 ST)	None
	Barge unloaded by bucket ladder conveyor (1,267,000 ST)		Conveyor stacker (467,000 ST)		Clamshell bucket to conveyor (2,867,000 ST)		
			Conveyor to storage pile (800,000 ST)				
Unaglomerated Iron Ore	Barge unloaded by clamshell (98,000 ST)	1 transfer station (98,000 ST)	Same clamshell that unloaded barge (98,000 ST)	Open storage pile (98,000 ST)	Clamshell bucket to conveyor (98,000 ST)	4 transfer stations (98,000 ST)	None
Limestone/Dolomite	Barge unloaded by bucket ladder (88,000 ST)	5 transfer stations (17,600 ST)	Conveyor to storage pile (70,400 ST) Conveyor stacker (17,600 ST)	Open storage pile (88,000 ST)	Front end loader to conveyor (17,600 ST) Clamshell bucket to conveyor (70,400 ST)	None	None
Sinter, Nodules and Briquettes	Sinter plant (1,334,000 ST)	3 transfer stations (1,334,000 ST)	Conveyor stacker (387,000 ST)	Open storage pile (387,000 ST)	Clamshell bucket to conveyor (387,000 ST)	3 transfer stations (387,000 ST)	Screened (1,041,000 ST)

TABLE 6. (concluded)

Material	Handling method and amount of material handled						
	Origination mode	Transfer stations	Storage load-in	Storage	Storage load-out	Transfer stations	Screening
Sinter Input (Flux, Iron Ore, and Coke Fines)	Barge unloaded by clamshell (724,000 ST)	9 transfer stations (724,000 ST)	Conveyor stacker (724,000 ST)	Open storage pile (1,575,000 ST)	Front end loader to conveyor (850,000 ST)	8 transfer stations for flux and coke; 11 for iron ore (1,575,000 ST)	None
	Barge unloaded by bucket ladder conveyor (724,000 ST)						
	Coke breeze from screening (126,000 ST)		Front end loader (126,000 ST)		Clamshell bucket to conveyor (724,000 ST)		

TABLE A-7. RAW AND INTERMEDIATE MATERIAL HANDLING AT UNITED STATES STEEL'S GENEVA WORKS IN 1978

	Handling method and amount of material handled						
Material	Origination mode	Transfer stations	Storage load-in	Storage	Storage load-out	Transfer stations	Screening
Coal	Railcar unloaded by rotary dump (1,540,000 ST)	1 transfer station (1,150,000 ST)	Conveyor to open storage (1,540,000 ST)	Open storage pile (1,540,000 ST)	Dozer pushes onto underground conveyor (1,540,000 ST)	Primary and secondary hammer mill, blending bins, 9 transfer and storage bins (1,540,000 ST)	None
Coke	Coke ovens (1,150,000 ST)	1 transfer station (1,150,000 ST)	None	None	None	3 transfer stations (1,150,000 ST)	Screening (1,150,000 ST)
Iron Ore Pellets	Railcar unloaded by rotary dump (1,450,000 ST)	None	Conveyor stacker (1,450,000 ST)	Open storage pile (1,450,000 ST)	Rake reclaimer and bottom plow feeder to underground conveyor (1,235,000 ST) Bucket wheel reclaimer (145,000 ST) Front end loader to conveyor (72,500 ST)	10 transfer stations (1,450,000 ST)	Screening (1,450,000 ST)
Unagglomerated Iron Ore	Railcar unloaded by rotary dump (1,007,000 ST)	6 transfer stations (1,007,000 ST)	Conveyor stacker (1,007,000 ST)	Open storage pile (1,007,000 ST)	Bottom plow feeder (1,007,000 ST)	5-10 transfer stations (1,007,000 ST)	Screening (1,007,000 ST)
Limestone/dolomite	Railcar unloaded by bottom dump (645,000 ST)	None	Conveyor to bins (645,000 ST)	Bins (645,000 ST)	Bins to scale car (645,000 ST)	None	None
Sinter	Sinter plant (863,000 ST)	1 Drop box onto continuous conveyor (863,000 ST)	None	None	None	None	Screening (863,000 ST)
Sinter Input (Coke Fines)	Railcar unloaded by bottom dump (64,000 ST)	3 transfer stations and screening (64,000 ST)	Conveyor to bins (57,400 ST)	Bins (57,400 ST)	Bins to sinter mix system (57,400 ST)	None outside sinter building	None
Sinter Input (flux and iron ore)	See iron ore and limestone/dolomite	See iron ore & limestone/dolomite	See iron ore and limestone/dolomite	Open storage piles (1,061,000 ST)	Bottom plow feeder to conveyor (1,061,000 ST)	5-10 transfer stations (1,061,000 ST)	Screening (1,061,000 ST)

TABLE A-8. RAW AND INTERMEDIATE MATERIAL HANDLING AT UNITED STATES STEEL'S GARY WORKS IN 1978

	Handling method and amount of material handled						
Material	Origination mode	Transfer stations	Storage load-in	Storage	Storage load-out	Transfer stations	Screening
Coal	Rotary dump of railcar onto underground conveyor (4,700,000 ST)	7 conveyor transfer stations (4,700,000 ST)	Truck transported from stocking out bin (704,000 ST) Coal preparation and handling (i.e., screening, pulverizing, and proportioning (3,996,000 ST)	Open storage pile (704,000 ST) None (3,996,000 ST)	Front-end loader pickup and transported to reclaim hopper (704,000 ST)	Conveyor transfer station (4,700,000 ST)	Conveyor screening station (4,700,000 ST)
Coke	Coke ovens (3,290,000 ST)	Conveyor transfer station (3,290,000 ST)	Transfer car (3,290,000 ST)	Storage bin (3,290,000 ST)	Vibrator feeder (3,290,000 ST)	Conveyor transfer station (3,290,000 ST)	Conveyor screening station (2,960,000 ST) Emergency bins (not screened) (330,000 ST)
Sinter Input (Coke fines)	Railcar side dump (419,000 ST) Bottom dump railcar (419,000 ST) Undersized material from screening and crushing (3,350,000 ST)	Truck (4,190,000 ST)	Truck (4,190,000 ST)	Storage bin (4,190,000 ST)	Conveyor transport (4,190,000 ST)	Conveyor transport (4,190,000 ST)	None
Sinter	Sinter plants (4,375,000 ST)	None	Conveyor (4,375,000 ST)	Open storage pile (656,000 ST) Sinter load-out bin building (3,720,000 ST)	Transfer car (4,375,000 ST)	Hi-Line storage bin (2,930,000 ST) Storage bin (1,450,000 ST)	No. 13 blast furnace screening station (1,440,000 ST) Remaining blast furnaces (No screening) (2,930,000 ST)
Iron Ore Pellets	Hulett unloading of bulk vessel (3,980,000 ST) Vessel (self-unloader) (1,400,000 ST)	Crane clamshell bucket drop ore bridge (3,980,000 ST) Conveyor transfer station (1,400,000 ST)	Crane clamshell (ore bridge) onto pile (1,610,000 ST) Stationary stacker onto pile (3,770,000 ST)	Open storage pile (5,380,000 ST)	Truck and conveyor (1,775,000 ST) Crane clamshell bucket transfer to hi-line bin (3,600,000 ST)	Truck and conveyor (1,775,000 ST) Transfer car (3,600,000 ST)	No. 13 blast furnace (1,775,000 ST) No screening Remaining blast furnaces (3,600,000 ST) No screening
Sinter Input (Iron Ore)	Crane-clamshell bucket transfer from ore vessel (4,190,000 ST)	Conveyor transfer station (4,190,000 ST)	Conveyor transport (4,190,000 ST)	Open storage (2,100,000 ST)	Conveyor transport (4,190,000 ST)	None	None

TABLE A-8. (concluded)

Material	Handling method and amount of material handled						
	Origination mode	Transfer stations	Storage load-in	Storage	Storage load-out	Transfer stations	Screening
Sinter Input (Flux)	Self-unloading barge (4,190,000 ST)	Conveyor transport (4,190,000 ST)	Conveyor transport (4,190,000 ST)	Revert blending piles (4,190,000 ST)	Transport Truck (4,190,000 ST)	Conveyor transport (4,190,000 ST)	None
Limestone/Dolomite	Hulett unloading of bulk vessel (452,000 ST) Self-unloading vessel (1,930,000 ST)	Ore bridge (2,380,000 ST)	Ore bridge (2,380,000 ST)	Open storage pile (2,380,000 ST)	Crane-clamshell bucket transfer to bin (2,380,000 ST)	Transfer car (2,380,000 ST)	None
Unagglomerated Iron Ore	Hulett unloading of ore vessel (3,386,000 ST)	Ore bridge (3,386,000 ST)	Crane-clamshell bucket drop into pile (Ore bridge) (3,386,000 ST)	Open storage pile (3,386,000 ST)	Crane-clamshell bucket transfer to bin (3,386,000 ST)	Transfer car (3,386,000 ST)	None

TABLE A-9. RAW AND INTERMEDIATE MATERIAL HANDLING AT THE J & L STEEL ALIQUIPPA PLANT IN 1978

Material	Handling method and amount of material handled						
	Origination mode	Transfer stations	Storage load-in	Storage	Storage load-out	Transfer stations	Screening
Coke	Railcar unloaded by bottom dump (1,465,000 ST)	None	Conveyors (1,465,000 ST)	Storage bins (1,465,000 ST)	Conveyors (1,465,000 ST)	None	Screened - 95% to blast furnaces; 5% to sinter plants
Coal for boilers and storage	Barge unloaded by clamshell (34,600 ST) Barge unloaded by bucket-ladder conveyor (1,678,000 ST) Truck unloaded (17,300 ST)	None	Conveyor to temporary storage to coal yard pile via bucket ladder conveyor (623,000 ST) Front-end loader to stacker conveyor to bins (644,000 ST)	Open storage pile (623,000 ST) Bins (661,000 ST)	Bucket ladder to conveyor (623,000 ST)	None	None
Coal for Coke oven	Barge unloaded by bucket-ladder conveyor and fed into bins (2,358,000 ST) Railcar unloaded via rotary dump (73,000 ST)	22 transfer stations (2,358,000 ST)	Conveyors to crusher to bins (2,431,000 ST)	Storage bins (2,431,000 ST)	Bins to conveyor to crusher to bins (2,431,000 ST)	None	None
Iron Ore Pellets	Railcar unloaded to transfer car via rotary dump (1,184,000 ST) Railcar unloaded to conveyor via bottom dump (1,184,000 ST)	None	Transfer car to temporary storage area to ore yard pile via clamshell (1,184,000 ST) Conveyors to cast-house storage bins (1,184,000 ST)	Open storage (1,184,000 ST)	Clamshell to transfer car (1,184,000 ST)	Transfer car to cast house storage bin (1,184,000 ST)	Screened (1,018,000 ST)
Unagglomerated Iron Ore	Railcar unloaded to transfer car via rotary dump (62,200 ST)	None	Transfer car to temporary storage to ore yard via clamshell (62,200 ST)	Open storage pile (62,200 ST)	Clamshell bucket to transfer car	Transfer car to bin (62,200 ST)	Screening (27,700 ST)

TABLE A-9. (concluded)

Material	Handling method and amount of material handled						
	Origination mode	Transfer stations	Storage load-in	Storage	Storage load-out	Transfer stations	Screening
Limestone/Dolomite	Railcar unloaded to transfer car via rotary dump (71,000 ST) Railcar unloaded to conveyor via bottom dump (30,000 ST)	None	Transfer car to temporary storage to main storage area via clamshell (71,000 ST) Conveyor to bins (30,000 ST)	Open storage pile (71,000 ST) Bins (30,000 St)	Clamshell bucket to transfer car (71,000 ST)	Transfer car to bin (71,000 ST)	None
Sinter	Sinter plant (1,548,000 ST)	5 transfer stations (1,548,000 ST)	Conveyor to bins (1,548,000 ST)	Bins (1,548,000 ST)	Bins to transfer car (1,548,000 ST)	Transfer car to casthouse bins to skip cars (882,000 ST) Transfer car to casthouse bins to 3 transfer stations (666,000 ST)	Screening (666,000 ST)
Sinter Input (Flux, Iron ore and Coke Fines)	Railcar unloaded to conveyor via rotary dump (1,527,000 ST) Railcar unloaded to conveyor via bottom dump (655,000 ST)	2 transfer stations (2,182,000 ST)	Conveyor to (2,182,000 ST)	Bins (2,182,000 ST)	Bins to conveyor (2,182,000 ST)	15 transfer stations (2,182,000 ST)	None

TABLE A-10. RAW AND INTERMEDIATE MATERIAL HANDLING AT J & L STEEL INDIANA HARBOR PLANT IN 1978

Material	Handling method and amount of material handled						
	Origination mode	Transfer stations	Storage load-in	Storage	Storage load-out	Transfer stations	Screening
Coke	Coke ovens (840,000 ST)	4 transfer stations (840,000 ST)	Conveyors (840,000 ST)	Bins (840,000 ST)	Bin to conveyors	None	None
Coal	Unloaded from rail-car via side dump (1,260,000 ST)	1 transfer station (1,260,000 ST)	Clamshell bucket to storage pile (630,000 ST) Clamshell bucket to bin storage (630,000 ST)	Open storage pile (630,000 ST) Bins (630,000 ST)	Clamshell bucket to conveyors (1,260,000 ST)	3 transfer stations (1,260,000 ST)	None
Pellets	Barge unloaded via clamshell (666,000 ST) Barge unloaded via bucket ladder conveyor (3,775,000 ST)	None None	Clamshell bucket to storage pile (3,331,000 ST) Conveyors to bins (1,110,000 ST)	Open storage pile (3,331,000 ST) Bins (1,110,000 ST)	Clamshell bucket to conveyor (3,331,000 ST) Bridge crane to conveyor (1,110,000 ST)	None	None
Unagglomerated Iron Ore	Barge unloaded via clamshell (424,000 ST)	None	Clamshell bucket to storage pile (424,000 ST)	Open storage pile (424,000 ST)	Front end loader to conveyor (424,000 ST)	5 transfer stations (424,000 ST)	Screened (424,000 ST)
Sinter, Nodules and Briquettes	Sinter plant (700,000 ST)	None	Clamshell stacker to open storage pile (105,000 ST) Conveyors to bins (595,000 ST)	Open storage pile (105,000 ST) Bins (595,000 ST)	Bins to conveyors (595,000 ST) Clamshell bucket to conveyors (105,000 ST)	None	None
Sinter Input (flux, Iron Ore and Coke Fines)	Barge unloaded via clamshell (609,000 ST) Truck unloaded (19,000 ST)	6 transfer stations (19,000 ST)	Clamshell bucket to open storage pile (609,000 ST) Conveyor stacker (19,000 ST)	Open storage pile (609,000 ST) Bins (19,000 ST)	Front end loader to conveyor (609,000 ST) Bins to conveyor (19,000 ST)	5 transfer stations (628,000 ST)	Screening (628,000 ST)
Limestone/dolomite	Barge unloaded via bucket ladder conveyor (60,000 ST) Truck unloaded (338,000 ST)	None	Clamshell bucket to open storage pile (398,000 ST)	Open storage pile (398,000 ST)	Clamshell bucket to conveyors (398,000 ST)	None	None

TABLE A-11. SLAG HANDLING AT SURVEYED IRON AND STEEL PLANTS IN 1978

Plant	Origination process	Molten slag transport	Cooled slag loading and transport	Preprocessed slag storage	Slag processing	Processed slag transport and storage
Interlake-Chicago	Blast furnaces (297,000 ST)	Flows to pits along side casthouse and is quenched (297,000 ST)	Front-end loader to haul truck (297,000 ST)	None	None	No storage - hauled off-site (297,000 ST)
Interlake-Riverdale	Steel furnaces (168,000 ST)	Slag pots transported by rail and dumped into pit and quenched (168,000 ST)	Power shovel to screens (168,000 ST)	None	Crushing and screening (168,000 ST)	20% conveyed by stacker pile, 80% hauled off-site
Armco-Houston	Blast furnaces (134,000 ST)	Flows into pit near furnace and quenched (319,000 ST)	Front-end loader to haul truck (319,000 ST)	None	Crushing and screening (319,000 ST)	Front end loader to open storage pile (319,000 ST)
J & L - Aliquippa	Blast furnaces (836,000 ST)	Slag pots transported by rail and dumped into pits and quenched (836,000 ST)	Front-end loader to haul truck (836,000 ST)	None	Dumped via truck into grizzlies feedery crusher and screens (1,640,000 ST)	Conveyor stacker to open storage pile (836,000 ST)
	Steel furnaces (804,000 ST)	Slag pots transported via truck and dumped into pits and quenched (804,000 ST)				In-plant landfill (541,000 ST) Recycled to iron and steel making (262,000 ST)
National Steel-Great Lakes Steel Division	Blast furnaces (1,010,000 ST) Steel furnaces (1,960,000 ST)	Slag pots transported by truck off-site (1,960,000 ST) Flows into pit near furnace and quenched (1,010,000 ST)	Front-end loader to (1,010,000 ST)	None on-site	None on-site	Hauled off-site (2,970,000 ST)
Armco-Middletown	Blast furnaces (393,000 ST)	Slag pots transported by truck (32,000 ST)	Front-end loader to truck (321,000 ST)	Open storage pile (321,000 ST)	Crushing and screening (714,000 ST)	Transported by truck and dumped into open storage pile (457,000 ST)
	Steel furnaces (321,000 ST)	Slag pots transported by rail and dumped into pits and quenched (393,000 ST)	Power shovel to to truck (393,000 ST)			

TABLE A-11. (continued)

Plant	Origination process	Molten slag transport	Cooled slag loading and transport	Preprocessed slag storage	Slag processing	Processed slag transport and storage
J & L - Indiana Harbor	Blast furnaces (819,000 ST)	Flows to pits along side casthouse and is quenched (819,000 ST)	Front-end loader to haul truck (819,000 ST)	Truck dump in storage pile (819,000 ST)	Crushing and screening (819,000 ST)	Conveyor stacker to open storage pile to truck for hauling off-site (819,000 ST)
	Steel furnaces (N/A)	Slag pots transported by slag hauler and dumped into pit and quenched	Front-end loader to haul trucks	None	Crushing and screening	Truck to open storage pile to further on-site processing
Bethlehem-Sparrows Point	Blast furnace (1,381,000 ST)	Slag pots transported by slag hauler and dumped into pit and quenched (1,381,000 ST)	Front-end loader to rail car (1,381,000 ST)	Open storage pile (1,381,000 ST)	Crushing and screening (1,381,000 ST)	Truck to open storage pile to further on-site processing (1,381,000 ST)
Bethlehem-Burns Harbor	Blast furnace (1,362,000 ST)	Slag runner to quench pit (1,362,000 ST)	Front-end loader to haul truck (1,362,000 ST)	Open storage pile (1,253,000 ST)	Crushing and screening (1,253,000 ST)	Stacking of processed slag onto open storage pile (1,015,000 ST)
				Pelletized open storage pile (109,000 ST)	Pelletized slag hauled from plant by truck (109,000 ST)	Truck dumping of processed slag onto open storage pile (150,000 ST) Scrap iron transported by truck (88,000 ST)
	Steel furnace (965,000 ST)	Slag pots transported by slag hauler and dumped into quench pit (965,000 ST)	Front-end loader onto pile (965,000 ST)	Open storage pile (965,000 ST)	Crushing and screening (965,000 ST)	Stacking slag onto open storage pile (386,000 ST)
						Dumping slag onto open storage pile (361,000 ST)
						Segregated scrap steel transported to further on-site processing (318,000 ST)
United States Steel - Gary Works Q-BOP Slag	Steel furnace (900,000 ST)	Slag pots transported via railcar (900,000 ST)	Loaded on pile via front-end loader (900,000 ST)	Open storage pile (900,000 ST)	Crushing and screening (900,000 ST)	Mobile or stationary stacking of processed slag onto open pile (900,000 ST)
United States Steel - Gary Works #1 BOP Slag	Steel furnace (960,000 ST)	Slag pots transported via railcar (960,000 ST)	Power shovel (960,000 ST)	Open storage pile (960,000 ST)	Crushing and screening (960,000 ST)	Mobile or stationary stacking of processed slag onto open pile (960,000 ST)

TABLE A-11. (concluded)

Plant	Origination process	Molten slag transport	Cooled slag loading and transport	Preprocessed slag storage	Slag processing	Processed slag transport and storage
U.S. Steel Gary Works BL FCE Slag	Blast furnace (1,900,000 ST)	Slag pots transported via railcar (1,300,000 ST) Slag pots transported via truck (600,000 ST)	Haul truck via front-end loader (1,400,000 ST) Railcar via front-end loader (500,000 ST)	Open pile storage (900,000 ST) Direct plant feed (1,000,000 ST)	Crushing and screening (1,900,000 ST)	Stacking of processed slag onto open storage pile (200,000 ST) Dumping processed slag onto open storage pile (1,500,000 ST) Transport of processed slag by conveyor and storage in bin (200,000 ST)

APPENDIX B

EXAMPLE OPEN DUST SOURCE CONTROL SURVEY QUESTIONNAIRE

IRON AND STEEL PLANT
OPEN DUST SOURCE CONTROL SURVEY

I. GENERAL INFORMATION

Name of Company _____ Location of Plant _____

Total Length of Paved Roads in Plant _____ mi. Total Length of Unpaved Roads in Plant _____ mi.

Approx. No. of Active Storage Piles in Plant _____ Approx. No. and Area of Unpaved Parking Lots in Plant _____ _____ acres

II. CONTROL TECHNOLOGY FOR PAVED ROADS

A. No. and Type of Street Sweepers Used to Clean Paved Roads

_____ Broom-Type _____ Regenerative Air-Type _____ Vacuum-Type _____ Flushing-Type

B. Design Information for Broom-Type Sweepers: Please provide information on each unit currently in service. If you own more than one of a particular model, simply indicate the purchase price and the year purchased for the additional sweepers. Use additional sheets as necessary.

1. Make _____ Model _____ Purchase Price $_____

Year Purchased and Est. Life Expectancy _____ _____ yrs. No. of This Model Currently in Service _____

Name of Manufacturer _____ Address _____

Phone Number (_____) _____-_____ Sales Representative _____

Approx. Annual Operating Cost $_____ Vehicle Weight _____ lb.

Fuel Consumption _____ mpg Width of Area Cleaned Per Pass _____ ft.

Hopper Capacity _____ yd^3 Normal Sweeping Speed _____ mph

Water Tank Capacity _____ gal. Water Flow at Spray Bar _____ gpm

Cleaning Capacity _____ ft^2/hr @ _____ mph

2. Make _____ Model _____ Purchase Price $_____

Year Purchased and Est. Life Expectancy _____ _____ yrs. No. of This Model Currently in Service _____

Name of Manufacturer _____ Address _____

Phone Number (_____) _____-_____ Sales Representative _____

Approx. Annual Operating Cost $_____ Vehicle Weight _____ lb.

Fuel Consumption _____ mpg Width of Area Cleaned Per Pass _____ ft.

Hopper Capacity _____ yd^3 Normal Sweeping Speed _____ mph

Water Tank Capacity _____ gal. Water Flow at Spray Bar _____ gpm

Cleaning Capacity _____ ft^2/hr @ _____ mph

C. Design Information for Regenerative Air or Vacuum-Type Sweepers: Please provide information on each unit currently in service. If you own more than one of a particular model, simply indicate the purchase price and the year purchased for the additional sweepers. Use additional sheets as necessary.

1. Make _____ Model _____ Purchase Price $_____

Year Purchased and Est. Life Expectancy _____ _____ yrs. No. of This Model Currently in Service _____

Name of Manufacturer _____ Address _____

Phone Number (_____) _____-_____ Sales Representative _____

Approx. Annual Operating Cost $_____ Vehicle Weight _____ lb.

Fuel Consumption _____ mpg Width of Area Cleaned Per Pass_____ ft.

Cleaning Capacity _____ ft^2/hr @ _____ mph Normal Sweeping Speed _____ mph

Vacuum Blower Capacity _____ cfm Velocity at Suction Head _____ fps

Hopper Capacity _____ yd^3 Type of Dust Control System _____
(i.e., wet or dry)

Type of Sweeper (vacuum or regenerative) _____

2. Make _____ Model _____ Purchase Price $_____

Year Purchased and Est. Life Expectancy _____ _____ yrs. No. of This Model Currently in Service _____

Name of Manufacturer _____ Address _____

Phone Number (_____) _____-_____ Sales Representative _____

Approx. Annual Operating Cost $_____ Vehicle Weight _____ lb.

Fuel Consumption _____ mpg Width of Area Cleaned Per Pass_____ ft.

Cleaning Capacity _____ ft^2/hr @ _____ mph Normal Sweeping Speed _____ mph

Vacuum Blower Capacity _____ cfm Velocity at Suction Head _____ fps

Hopper Capacity _____ yd^3 Type of Dust Control System _____
(i.e., wet or dry)

Type of Sweeper (vacuum or regenerative) _____

D. Design Information for Flushing-Type Sweepers: Please provide information on each unit currently in service. If you own more than one of a particular model, simply indicate the purchase price, year purchased, whether unit was modified and cost of modification. Use additional sheets as necessary.

1. Make _____ Model _____ Purchase Price $_____

Year Purchased and Est. Life Expectancy _____ _____ yrs. No. of This Model Currently in Service _____

Name of Manufacturer _____ Address _____

Phone Number (_____) _____-_____ Sales Representative _____

Was Original Unit Modified to Flushing Operation _____ Cost to Modify $_____

Approx. Annual Operating Cost $_____ Vehicle Weight (wet) _____ lb.

Vehicle Weight (dry) _____ lb. Fuel Consumption _____ mpg

Water Tank Capacity _____ gal. Water Flow at Nozzles _____ gpm

Normal Vehicle Speed _____ mph Hopper Capacity _____ yd^3

Water Pressure at Nozzles _____ psig Daily Water Consumption _____ gal.

Source of Water _____ Degree of Water Treatment _____

2. Make _____ Model _____ Purchase Price $_____

Year Purchased and Est. Life Expectancy ____ ____ yrs. No. of This Model Currently in Service _____

Name of Manufacturer _____ Address _____

Phone Number (____) ____-_____ Sales Representative _____

Was Original Unit Modified to Flushing Operation _____ Cost to Modify $_____

Approx. Annual Operating Cost $_____ Vehicle Weight (wet) _____ lb.

Vehicle Weight (dry) _____ lb. Fuel Consumption _____ mpg

Water Tank Capacity _____ gal. Water Flow at Nozzles _____ gpm

Normal Vehicle Speed _____ mph Hopper Capacity _____ yd^3

Water Pressure at Nozzles _____ psig Daily Water Consumption _____ gal.

Source of Water _____ Degree of Water Treatment _____

E. Operating Schedule for Street Sweepers: Please complete the following table indicating the average hours per day and days per month each sweeper described above is in service. Also indicate the number of miles traveled in a "typical" day.

Make of Sweeper	Model No.	Type of Sweeper (i.e., vacuum)	Hours Per Day Operated	Days Per Month Operated	Length of Road Cleaned Per Day

F. Operating and Maintenance Costs: Please complete the following table for each street sweeper currently in service. The costs indicated should be in 1980 dollars.

			Annual Operating and Maintenance Costs for Street Cleaning							
				Cost of Consumable Supplies						
Make of Sweeper	Model No.	Type of Sweeper (i.e., vacuum)	Cost of Operator	Gasoline and Oil	Water (if Applic.)	Other (Specify)	Maintenance and Repair Costs	Approx. Annual Depreciation	Total Costs	Approx. Annual Down-Time for Maintenance or Repairs (hr)

G. Cleaning Schedule: Please provide the schedule used for cleaning all of the paved roads throughout the plant. This schedule should include the frequency of cleaning, how this frequency was decided upon, and the method by which the various types of street sweepers described above are allocated to the cleaning of certain sections of road.

H. Projections: Please indicate below any of the sweepers mentioned above which are scheduled for retirement in the near future, the type of equipment being seriously considered as their replacement, and the reasons for such consideration. Also provide below any proposed changes in the operating or cleaning schedule which may be implemented in the future or any equipment modifications or changes considered.

III. CONTROL TECHNOLOGY FOR UNPAVED ROADS, SHOULDERS, PARKING LOTS, AND ACTIVE STORAGE PILES

A. Controls for Unpaved Roads and Paved Road Shoulders: Please complete the following information for your facility where applicable.

Treatment Method: Watering _____ Chemical Dust Suppressants _____ Other _____ (specify)

Type(s) of Chemical(s) Used: (check one or more as applicable)
Lignin Sulfonate _____ Petroleum Resins _____ Salts _____ Wetting Agents _____
Other _____ (specify)

Trade or Chemical Name(s) of Dust Suppressant(s) Used (if any) _____

Type of Diluent(s) Used (if any) _____

Application Rate _____ gal. of _____% solution per yd^2 of surface treated

Dilution Ratio _____ parts of chemical to _____ parts _____ (type of diluent)

Concentration of Chemical Suppressant as Received _____% by _____ (weight or volume)

Frequency of Application _____

Basis for Frequency of Application _____

Method of Application (e.g., distributor truck) _____

Length of Road Which Is Treated Annually _____ miles/yr

Total Capacity of On-Site Chemical Storage _____ gal. No. and Capacity of Storage Tanks _____

Cost of Concentrated Chemical Dust Suppressant(s) Delivered to Your Plant $_____/gal. (Chemical)

$_____/gal. (Freight)

Gallons of Chemical Delivered Per Shipment _____ gal.

Gallons of Chemical Delivered Per Year _____ gal.

Capital Cost for Storage Tanks $_____ in _____ (year of purchase) dollars

Line Items Included In Capital Cost for Storage Tanks:

$ _____ for tanks

$ _____ for installation labor

$ _____ for accessories

$ _____ for other

Construction Material for Storage Tanks (e.g. concrete or metal) _____

Is Storage Tank Above or Below Ground _____

Is the Tank Heated _____

Capital Equipment Cost for Method of Application (e.g., distributor truck) $_____ (year of purchase) in _____ dollars

Capacity of Distributor Truck _____ gallons

Annual Operating and Maintenance Cost of Treatment $_____ in _____ dollars
(year)
$_____ per mile of treated road
$_____ per actual mile of road

(Please attach supporting calculation for operating and maintenance costs)

Major Maintenance Problems Encountered (specify) _____

B. Control Methods for Unpaved Parking Lots and Other Exposed Areas: Please complete the following information for your facility where applicable.

Treatment Method: Watering _____ Chemical Dust Suppressants _____ Other _____
(specify)

Type(s) of Chemical(s) Used: (check one or more as applicable)
Lignin Sulfonate _____ Petroleum Resins _____ Salts _____ Wetting Agents _____
Other _____
(specify)

Trade or Chemical Name(s) of Dust Suppressant(s) Used (if any) _____

Type of Diluent(s) Used (if any) _____

Application Rate _____ gal. of _____% solution per acre of surface treated

Dilution Ratio _____ parts of chemical to _____ parts _____
(type of diluent)

Concentration of Chemical Suppressant as Received _____% by _____
(weight or volume)

Frequency of Application _____

Basis for Frequency of Application _____

Method of Application (i.e., distributor truck) _____

Area Which Is Treated Annually _____ acres/yr

Total Capacity of On-Site Chemical Storage _____ gal. No. and Capacity of Storage Tanks _____

Cost of Concentrated Chemical Dust Suppressant(s) Delivered to Your Plant $_____/gal. (Chemical)

$_____/gal. (Freight)

Gallons of Chemical Delivered Per Shipment _____ gal.

Gallons of Chemical Delivered Per Year _____gal.

Capital Cost for Storage Tanks $_____ in _____ dollars
(year of purchase)

Line Items Included in Capital Cost for Storage Tanks.

$_____ for tanks

$_____ for installation labor

$_____ for accessories

$_____ for other

Construction Material for Storage Tanks (e.g., concrete or metal) _____

Is Storage Tank Above or Below Ground _____

Is the Tank Heated _____

Capital Equipment Cost for Method of Application (e.g. distributor truck) $_____ in _____ dollars
(year of purchase)

Capacity of distributor truck _____ gal.

Annual Operating and Maintenance Cost of Treatment

$ _____ in _____ dollars
(year)

$ _____ per treated acre

$ _____ per actual acre

Major Maintenance Problems Encountered (specify) _____

Approx. Annual Operating and Maintenance Cost of Treatment $_____ per acre

Major Maintenance Problems Encountered (specify) _____

C. Control Methods for Active Storage Piles: Please complete the following information for each major active storage pile in your facility where applicable. Use additional sheets as necessary.

1. Type of Material in Storage (e.g., coal, pellets)_____ Surface Area of Storage Pile _____ ft^2

Is Stated Surface Area Projected Area or Actual Area _____

Average Daily Material Throughput _____ tons/day Average Material Reserve _____ tons

Treatment Methods:
Watering _____ Chemical Suppressants or Binders _____ Other _____
(specify)

Type(s) of Chemical(s) Used: (check one or more as applicable)
Lignin Sulfonate _____ Petroleum Resins _____ Salts _____ Wetting Agents _____
Other _____
(specify)

Trade or Chemical Name(s) of Dust Suppressant(s) Used (if any) _____

Type of Diluent(s) Used (if any) _____

Application Rate _____ gal. of _____% solution per ft^2 of surface treated

Dilution Ratio _____ parts of chemical to _____ parts _____
(type of diluent)

Concentration of Chemical Suppressant as Received _____% by _____
(weight or volume)

Frequency of Application _____

Basis for Frequency of Application _____

Method of Application (e.g. sprinkler system or mobile distributor truck) _____

Area Treated Annually _____ acres/yr

No. of Spray Nozzles in Operation _____ Type of Spray Pattern Generated _____

Make of Spray Nozzle(s) _____ Model No.(s) _____

Nozzle Capacity _____ gpm @ _____ psig

Spray Angle _____° Maximum Area of Coverage of Spray Pattern _____ ft^2

Designer of Sprinkler System _____ Address _____

Phone No. (_____) _____-_____ Est. Life Expectancy of System _____ yrs.

Total Capacity of On-Site Chemical Storage _____ gal. No. and Capacity of Storage Tanks _____

Cost of Concentrated Chemical Dust Suppressant Delivered to Your Plant $_____/gal. (Chemical)

$_____/gal. (Freight)

Gallons of Chemical Delivered Per Shipment _____ gal.

Gallons of Chemical Delivered Per Year _____ gal.

Capital Cost for Storage Tanks $_____ in _____ dollars
(year of purchase)

Line Items Included in Capital Cost for Storage Tanks.

$ _____ for tanks

$ _____ for installation labor

$ _____ for accessories

$ _____ for other

Construction Material for Storage Tanks (e.g. concrete or metal) _____

Is Storage Tank Above or Below Ground _____

Is the Tank Heated _____

Capital Equipment Cost for Method of Application (e.g., distributor truck) $_____ in _____ dollars
(year of purchase)

Capacity of Distributor Truck _____ gal.

Annual Operating and Maintenance Cost of Treatment

$ _____ in _____ dollars
(year)

$ _____ per treated acre

$_____ per actual acre

Major Maintenance Problems Encountered (e.g., freezing, clogging) _____

Source of Water _____ Degree of Water Treatment _____

2. Type of Material in Storage (e.g., coal pellets) _____ Surface Area of Storage Pile _____ ft^2

Is Stated Surface Area Projected Area or Actual Area _____

Average Daily Material Throughput _____ tons/day Average Material Reserve _____ tons

Treatment Methods:
Watering _____ Chemical Suppressants or Binders_____ Other _____
(specify)

Type(s) of Chemical(s) Used: (check one or more as applicable)
Lignin Sulfonate _____ Petroleum Resins _____ Salts _____ Wetting Agents _____
Other _____
(specify)

Trade or Chemical Name(s) of Dust Suppressant(s) Used (if any) _____

Type of Diluent(s) Used (if any) _____

Application Rate _____ gal. of _____% solution per ft^2 of surface treated

Dilution Ratio _____ parts of chemical to _____ parts _____
(type of diluent)

Concentration of Chemical Suppressant as Received _____% by _____
(weight or volume)

Frequency of Application _____

Basis for Frequency of Application _____

Method of Application (e.g., sprinkler system or mobile distributor truck) _____

No. of Spray Nozzles in Operation _____ Type of Spray Pattern Generated _____

Area Treated Annually _____ acres/yr

No. of Spray Nozzels in Operation _____ Type of Spray Pattern Generated _____

Make of Spray Nozzle(s) _____ Model No.(s)_____

Nozzle Capacity _____ gpm @ _____ psig

Spray Angle _____° Maximum Area of Coverage of Spray Pattern _____ ft^2

Designer of Sprinkler System _____ Address _____

Phone No. (_____) _____-_____ Est. Life Expectancy of System _____ yrs.

Total Capacity of On-Site Chemical Storage _____ gal. No. and Capacity of Storage Tanks _____

Cost of Concentrated Chemical Dust Suppressant Delivered to Your Plant $_____/gal. (Chemical)

$_____/gal. (Frequent)

Gallons of Chemical Delivered Per Shipment _____ gal.

Gallons of Chemical Delivered Per Year _____ gal.

Capital Cost for Storage Tanks $_____ in _____ dollars
(year of purchase)

Line Items Included in Capital Cost for Storage Tanks.

$_____ for tanks

$_____ for installation labor

$_____ for accesssories

$_____ for other

Construction Material for Storage Tanks (e.g., concrete or metal) _____

Is Storage Tank Above or Below Ground _____

Is the Tank Heated _____

Capital Equipment Cost for Method of Application (e.g., distributor truck) $_____ in _____ dollars
(year of purchase)

Capacity of Distributor Truck _____ gal.

Annual Operating and Maintenance Cost of Treatment.

$ _____ in _____ dollars
(year)

$ _____ per treated acre

$ _____ per actual acre

Major Maintenance Problems Encountered (e.g., freezing, clogging) _____

Source of Water _____ Degree of Water Treatment _____

Name of Party Supplying Above Information _____ _____ ( ) -
(Name) (Title) (Telephone Number)

APPENDIX C

MISCELLANEOUS DESIGN/OPERATION AND COST DATA

TABLE C-1. MISCELLANEOUS OPERATION/DESIGN AND COST DATA FOR VACUUM SWEEPING PAVED ROADS

Name of Company: Armco, Inc.

Location of Plant: Middletown, Ohio

Make: Vac-All

Model: E10A

Purchase Price: $72,000

Year Purchased and Est. Life Expectancy: 1980 5 yrs.

No. of This Model Currently in Service: two

Name of Manufacturer: Central Engineering Company

Address: 4429 W. State St., Milwaukee, WI 53208

Phone Number: (513) 681-2200

Sales Representative: Bode Finn Co., Cincinnati, OH

Approx. Annual Operating Cost: $214,000

Vehicle Weight: 32,000 lb.

Fuel Consumption: 4 mpg

Width of Area Cleaned per Pass: 5 ft.

Cleaning Capacity: 150 ft^2/hr @ ____ mph

Normal Sweeping Speed: 5 mph.

Vacuum Blower Capacity: 12,000 cfm/min

Velocity at Suction Head: N/A fps.

Hopper Capacity: 10 yd^3

Type of Dust Control System: wet
(i.e., wet or dry)

TABLE C-2. MISCELLANEOUS OPERATION/DESIGN AND COST DATA FOR FLUSHING PAVED ROADS

Name of Company: Armco, Inc.

Location of Plant: Middletown, Ohio

Make: Tractor-Ford Tank-Etnyre

Model: DTR

Purchase Price: $68,000

Year Purchased and Est. Life Expectancy: 1976 10 yrs.

No. of This Model Currently in Service: one

Name of Manufacturer: Ford, Etnyre

Address: King Equip. Co., Street Rt 63 I-75, Monroe, OH

Phone Number: ( ) -

Sales Representative: King Equip. Co., Street Rt 63 I-75 Monroe, OH

Was Original Unit Modified to Flushing Operation: no

Cost to Modify: $ N/A

Approx. Annual Operating Cost: $57,000

Vehicle Weight: (wet) N/A lb.

Vehicle Weight: (dry) N/A lb.

Fuel Consumption: 7 mpg

Water Tank Capacity: 8,000 gal.

Water flow at Nozzles: 188 gpm

Normal Vehicle Speed: ____ mph

Hopper Capacity: 40 yd^3

Water Pressure at Nozzles: 50 psig

Daily Water Consumption: 30,000 gal.

Source of Water: Treated river water

Degree of Water Treatment: 1,800 gal/mile

TABLE C-3. MISCELLANEOUS OPERATION/DESIGN AND COST DATA FOR BROOM SWEEPING PAVED ROADS

Name of Company: Armco, Inc.

Location of Plant: Houston, Texas

Make: Versa-Sweeper

Model: 6300

Purchase Price: $18,000 - Purch 8/78
$20,000 - Purch 4/80

Year Purchased and Est. Life Expectancy: _____ 5 yrs.

No. of This Model Currently in Service: two

Name of Manufacturer: Terrain King

Address: P.O. Box 549, Seguin, Texas

Phone Number: (512) 379-1480

Sales Representative: Plains Machinery Co. (Houston)

Approx. Annual Operating Cost: $65,100 - #1
$57,000 - #2

Vehicle Weight: 5,000 lb.

Fuel Consumption: 3 mpg

Width of Area Cleaned per Pass: 7.5 ft.

Hopper Capacity: N/A yd^3

Normal Sweeping Speed: 3 to 5 mph.

Water Tank Capacity: N/A gal.

Water Flow at Spray Bar: N/A gpm

Cleaning Capacity: 69,700 ft^2/hr @ 3 mph.

TABLE C-4. OPERATING SCHEDULE OF PAVED ROAD CONTROL EQUIPMENT

Plant	Make of sweeper	Model No.	Type of sweeper (i.e., vacuum)	Hours/Day operated	Days/Month operated	Length of Road Cleaned per day
Armco, Middletown	Vac-All	E10A	Vacuum	12	28	6 miles
Armco, Middletown	Etnyre	DTR	Flushing	8	20	20 miles
Armco, Houston	Versa-Sweeper	6300	Broom	6	20 to 25	3 to 5 miles[a]

[a] Sweeper must make multiple passes on all roads. Thus, although it travels 20 to 30 miles/day, only 3 to 5 miles of plant roads are cleaned.

TABLE C-5. CLEANING FREQUENCY FOR PAVED ROADS

Armco, Middletown

- All paved road segments which are located in zones A, B, and D (entire plant excluding the hot metals area) are to be swept or flushed of surface material once during every three consecutive days.
- All paved road segments which are located in zone C (the hot metals area) are to be swept or flushed of surface materials once during every two consecutive days.
- Frequency was determined by on-site observation, vehicle counts, and types of materials transported on these roads.
- Dispatcher allocates street sweepers to various zones according to schedules.

Armco, Houston

- Only one sweeper truck at a time is assigned to cleaning paved roads in the plant. The truck is staffed for one 8-hr turn per day, giving about 6 hr/day available for use.
- The sweeping pattern covers each paved road in the plant and takes approximately 3 days to complete. The pattern is then repeated.
- Deviations from the pattern are made as needed, based on observations and/or special requests, to provide extra coverage of dirtier roads.

TABLE C-6. BREAKDOWN OF ANNUAL OPERATING AND MAINTENANCE COSTS FOR PAVED ROAD CONTROL EQUIPMENT

Plant	Make of sweeper	Model No.	Type of sweeper (i.e., vacuum)	Approx. annual total operating and maintenance costs for street cleaning: Cost of operator	Cost of consumable supplies: Gasoline and oil	Cost of consumable supplies: Water (if applic.)	Cost of consumable supplies: Other (specify)	Maintenance and repair costs	Approx. annual depreciation	Total costs	Approx. annual down-time for maintenance or repairs (hr)
Armco, Middletown	Vac-All	E10A	vacuum	$21.00/hr	$0.30/mile	N/A	N/A	$1.41/mile	-	$214,000	240
Armco, Middletown	Vac-All	E10A	vacuum	$21.00/hr	$0.30/mile	N/A	N/A	$1.41/mile	-	$214,000	240
Armco, Middletown	Ford, Etnyre	DTR	flushing	$21.00/hr	$0.17/mile	N/A	N/A	$2.13/mile	-	$57,000	380
Armco, Houston	Versa-Sweeper (Purch. 8/78)	6300	broom	$42,630	$3,066	N/A	N/A	$16,400	$3,000	$65,100	570
Armco, Houston	Versa-Sweeper (Purch. 4/80)	6300	broom	$42,630	$3,066	N/A	N/A	$7,900	$3,333	$57,000	270
Armco, Houston	Water truck[a]			$42,630	$3,066	-0-	N/A	$16,300	$5,666	$67,700	342

[a] Watering truck must be operated along with sweepers to treat paved roads. Since water truck is also used on unpaved roads, it would be realistic to charge 14.6/18.9 of its operating cost (or $52,300) to paved road care, and the remainder to unpaved road care.

TABLE C-7. MISCELLANEOUS OPERATION/DESIGN AND COST DATA FOR APPLICATION OF CHEMICAL DUST SUPPRESSANTS TO UNPAVED ROADS AND SHOULDERS.

Name of Company: Armco, Inc. Location of Plant: Middletown, Ohio

Trade or Chemical Name(s) of Dust Suppressant(s) Used (if any): Coherex®

Type of Diluent(s) Used (if any): water

Initial Application Rate: 0.19 gal. of 16.7 % solution/yd^2 surface treated

Follow-up Application Rate: 0.28 gal. of 11 % solution per yd^2 of surface treated

Initial Dilution Ratio: 1 parts of chemical to 5 parts water
(type of diluent)

Follow-up Dilution Ratio: 1 parts of chemical to 8 parts water

Concentration of Chemical Suppressant as Received: N/A % by _____
(weight or volume)

Frequency of Application: Varies from once every 2 days to once every 6 weeks

Basis for Frequency of Application: Periodic visual inspection

Method of Application (i.e., distributor truck): Mobile distributor truck

Length of Road Which Can Be Treated Per day: 6.3 miles/day

Total Capacity of On-Site Chemical Storage: 20,000 gal. No. and Capacity of Storage Tanks: 2 (12,000 - 8,000)

Cost of Concentrated Chemical Dust Suppressant(s) Delivered to Your Plant: $1.06 gal. + 0.30 frt/gal.

Capital Cost for Storage Tanks: $30,000 (installed cost for metal tanks) in 1980 dollars
(year of purchase)

(continued)

TABLE C-7 (concluded)

Capital Equipment Cost for Method of Application: $70,000 (4,500 gal. cap. truck) in 1980 dollars (year of purchase)

Approx. Annual Operating and Maintenance Cost of Treatment: $175 per mile

Major Maintenance Problems Encountered (specify): Coherex® will jell at 32°F and below

If Unpaved Roads Were to be Paved, What is Approx. Cost/Mile: $140,000 = 30 ft x 6 in.

Approx. Life Expectancy of a Typical Paved Road: 10 yrs.

TABLE C-8. MISCELLANEOUS OPERATION/DESIGN AND COST DATA FOR WATERING OF UNPAVED ROADS AND SHOULDERS

Name of Company: Armco, Inc. Location of Plant: Houston, Texas

Type(s) of Chemical(s) Used: (check one or more as applicable) N/A
Lignin Sulfonate: _____ Petroleum Resins: _____ Salts: _____ Wetting Agents: _____
Other: _____
(specify)

Trade or Chemical Name(s) of Dust Suppressant(s) Used (if any): N/A

Type if Diluent(s) Used (if any): N/A

Application Rate: 0.48 gal. of 0 % solution per yd^2 of surface treated

Dilution Ratio: _____ parts of chemical to _____ parts _____
(type of diluent)

Concentration of Chemical Suppressant as Received _____% by _____
(weight or volume)

Frequency of Application: In general, once every 3 days

Basis for Frequency of Application: As needed based on rainfall and humidity, or on request.

Method of Application (i.e., distributor truck): Watering truck

Length of Road Which Can Be Treated Per Day 2 miles/day[a]

Total Capacity of On-Site Chemical Storage: N/A gal. No. and Capacity of Storage Tanks: N/A

Cost of Concentrated Chemical Dust Suppressant(s) Delivered to Your Plant: $ N/A /gal.

Capital Cost for Storage Tanks: $ N/A in _____ dollars
(year of purchase)

Capital Equipment Cost for Method of Application: $34,000 in 1978 dollars
(year of purchase)

(continued)

TABLE C-8 (concluded)

Approx. Annual Operating and Maintenance Cost of Treatment: $3,580 per mile of unpaved road in plant

Major Maintenance Problems Encountered (specify): Replaced pump twice, replaced clutch twice

If Unpaved Roads Were to be Paved, What is Approx. Cost/Mile: $170,000 (est.)

Approx. Life Expectancy of a Typical Paved Road: 2 yrs.

[a] Watering truck is used to water paved roads prior to their treatment by broom sweeper. As time permits, the watering truck treats unpaved roads.

TABLE C-9. MISCELLANEOUS OPERATION/DESIGN AND COST DATA FOR APPLICATION OF CHEMICAL DUST SUPPRESSANTS TO UNPAVED PARKING LOTS AND EXPOSED AREAS.

Name of Company: Armco, Inc. Location of Plant: Middletown, Ohio

Trade or Chemical Name(s) of Dust Suppressant(s) Used (if any): Coherex®

Type of Diluent(s) Used (if any): water

Application Rate: 910 gal. of 16.7 % solution per acre of surface treated up to 1,364 gal. of 11.1%

Initial Dilution Ratio: 1 part of chemical to 5 parts water
(type of diluent)

Follow-up Dilution Ratio: 1 part of chemical to 8 parts water

Concentration of Chemical Suppressant as Received: N/A % by _____
(weight or volume)

Frequency of Application: Two to three coats per year

Basis for Frequency of Application: Periodic visual inspection

Method of Application (i.e., distributor truck): Mobile distributor truck

Area Which Can be Treated Per Day: 6.1 acres/day

Approx. Annual Operating and Maintenance Cost of Treatment: $180 per acre

Major Maintenance Problems Encountered (specify): Freezing - 32°F and below

If Unpaved Parking Lots or Other Exposed Areas Were to be Paved, What is Approx. Cost/Acre: $29,000
($6.00/yd^2)

Approx. Life Expectancy of a Typical Paved Parking Lot: N/A yrs.

TABLE C-10. MISCELLANEOUS OPERATION/DESIGN AND COST DATA FOR WATERING OF STORAGE PILES

Name of Company: Armco, Inc. Location of Plant: Middletown, Ohio

1. Type of Material in Storage: Coal Surface Area of Storage Pile: 390,000 ft^2

Average Daily Material Throughput: 2,800 tons/day Average Material Reserve: 84,000 tons

Treatment Methods:
Watering: √ Chemical Suppressants or Binders: ____ Other: ____

Frequency of Application: Once every 2 days

Basis for Frequency of Application: Visual inspection

Method of Application (i.e., sprinkler system): Permanent sprinkler system

No. of Spray Nozzles in Operation: 10 Type of Spray Pattern Generated: N/A

Make of Spray Nozzle(s): Nelson Model No.(s): Nelson Big Gun P-200T

Nozzle Capacity: 500 gpm @ 100 psig

Spray Angle 27° above horizontal Maximum Area of Coverage of Spray Pattern: 394,000 ft^2

Designer of Sprinkler System: Old Field Equipment Co. Address: 430 W. Seymore Ave., Cincinnati, Ohio

Phone No.: (513) 821-5582 (Bob Meier) Est. Life Expectancy of System: 20 years

Capital Equipment Cost for Method of Application: $350,000 in 1980 (year of purchase) dollars

Approx. Annual Operating and Maintenance Cost of Treatment: $____ in N/A (year of record) dollars

Maintenance Problems Encountered (i.e., freezing, clogging): Clogging

Source of Water: Storm sewer run-off Degree of Water Treatment: 35,000 gal/total area

Name of Company: Armco, Inc. Location of Plant: Middletown, Ohio

2. Type of Material in Storage: Limestone Surface Area of Storage Pile: Varies ft^2

Average Daily Material Throughput: Varies tons/day Average Material Reserve: Varies tons

Treatment Methods:
Watering: √ Chemical Suppressants or Binders: ____ Other: ____

Concentration of Chemical Suppressant as Received: ____% by ____ (weight or volume)

Frequency of Application: Based upon weather conditions

Basis for Frequency of Application: Periodic visual inspection

Method of Application (i.e., sprinkler system): Mobile water truck

Capital Equipment Cost for Method of Application: $33,000 (1,500 gal. cap. truck) in 1979 (year of purchase) dollars

Approx. Annual Operating and Maintenance Cost of Treatment: $173,000 in 1980 (year of record) dollars

Maintenance Problems Encountered (i.e., freezing, clogging): None

Source of Water: Treated river water Degree of Water Treatment: None - general plant water

(continued)

TABLE C-10 (continued)

Name of Company: Armco, Inc. Location of Plant: Middletown, Ohio

3. Type of Material in Storage: Taconite pellets Surface Area of Storage Pile: Varies ft^2

Average Daily Material Throughput: 2,979 tons/day Average Material Reserve: Varies tons

Treatment Methods:
Watering: √ Chemical Suppressants or Binders: ____ Other: _____ (specify)

Frequency of Application: _____

Basis for Frequency of Application: Periodic visual inspection

Method of Application (i.e., sprinkler system): Mobile water truck

Capital Equipment Cost for Method of Application: $33,000 in 1979 (year of purchase) dollars

Approx. Annual Operating and Maintenance Cost of Treatment: $173,000 in 1980 (year of record) dollars

Maintenance Problems Encountered (i.e., freezing, clogging): None

Source of Water: Treated river water Degree of Water Treatment: None-general plant water

Name of Company: Armco, Inc. Location of Plant: Houston, Texas

4. Type of Material in Storage: Coal (main pile) Surface Area of Storage Pile: app. 312,000 ft^2

Average Daily Material Throughput: 1,110 tons/day Average Material Reserve: est. 55,000 tons

Treatment Methods:
Watering: √ Chemical Suppressants or Binders: ____ Other: _____ (specify)

Type(s) of Chemical(s) Used: (check one or more as applicable) N/A
Lignin Sulfonate: ____ Petroleum Resins: ____ Salts: ____ Wetting Agents: ____
Other: _____ (specify)

Trade or Chemical Name(s) of Dust Suppressant(s) Used (if any): N/A

Type of Diluent(s) Used (if any): N/A

Application Rate: 0.16 gal. of 0 % solution per ft^2 of surface treated

Dilution Ratio: ____ parts of chemical to ____ parts _____ (type of diluent))
) N/A
Concentration of Chemical Suppressant as Received: ____% by _____ (weight or volume))

Frequency of Application: As needed

Basis for Frequency of Application: Operated if natural rainfall does not provide 1/4 in. of water

Method of Application (i.e., sprinkler system): Spray system

No. of Spray Nozzles in Operation: See below Type of Spray Pattern Generated: Overlapping circular

Make of Spray Nozzle(s): Johns-Manville Model No.(s): See below

Nozzle Capacity: 100.4 gpm @ 60 psig NOZZLES:

Number	Model No.
23	586G2E
8	886G2E

(continued)

TABLE C-10 (continued)

Spray Angle: Std. - 26°, can tilt to 30 to 35° Maximum Area of Coverage of Spray Pattern: 330,000 ft^2

Designer of Sprinkler System: Watson Dist. Co., Inc. Address: P.O. Box 36211, Houston, Texas 77036

Phone No.: (713) 771-5771 Est. Life Expectancy of System: 20 years

Total Capacity of On-Site Chemical Storage: N/A gal. No. and Capacity of Storage Tanks: 1 - 76,500 gal.

Cost of Concentrated Chemical Dust Suppressant Delivered to Your Plant: $ N/A /gal.

Capital Cost for Storage Tanks: $45,000 in 1975 (year of purchase) dollars
(installed cost for underground concrete tank)
Capital Equipment Cost for Method of Application: $216,000 in 1975 (year of purchase) dollars
(includes storage tank, pumps, controls, piping, motors, and spray system)

Approx. Annual Operating and Maintenance Cost of Treatment: $8,600 in 1980 dollars (estimated)

Maintenance Problems Encountered (i.e., freezing, clogging): Freezing, plugging

Source of Water: Cooling water blowdown Degree of Water Treatment: None

Name of Company: Armco. Inc. Location of Plant: Houston, Texas

5. Type of Material in Storage: Coal (surge pile) Surface Area of Storage Pile: 16,000 ft^2

Average Daily Material Throughput: 1,000 tons/day Average Material Reserve: 12,000 tons

Treatment Methods:
Watering: √ Chemical Suppressants or Binders: ____ Other: _____ (specify)

Type(s) of Chemical(s) Used: (check one or more as applicable) N/A
Lignin Sulfonate: ____ Petroleum Resins: ____ Salts: ____ Wetting Agents: ____
Other: _____ (specify)

Trade of Chemical Name(s) of Dust Suppressant(s) Used (if any): N/A

Type of Diluent(s) Used (if any): N/A

Application Rate: 0.16 gal. of 0 % solution per ft^2 of surface treated

Dilution Ratio: ____ parts of chemical to ____ parts _____ (type of diluent)
Concentration of Chemical Suppressant as Received: ____% by _____ (weight or volume) N/A

Frequency of Application: As needed

Basis for Frequency of Application: Operated if natural rainfall does not provide 1/4 in. of water

Method of Application (i.e., sprinkler system): Spray system

No. of Spray Nozzles in Operation: 6 Type of Spray Pattern Generated: Overlapping half circles

Make of Spray Nozzle(s): Johns-Manville Model No.(s): 886G2E

Nozzle Capacity: 100.4 gpm @ 60 psig

Spray Angle: Std. 26°, can tilt to 30 to 35° Maximum Area of Coverage of Spray Pattern: 40,700 ft^2

(continued)

TABLE C-10. (concluded)

Designer of Sprinkler System: Armco, Inc. Address: P.O. Box 96120, Houston, Texas 77013

Phone No.: (713) 960-6020 Est. Life Expectancy of System: 20 years

Total Capacity of On-Site Chemical Storage: N/A gal. No. and Capacity of Storage Tanks: 1 - 10,000 gal.

Cost of Concentrated Chemical Dust Suppressant Delivered to Your Plant: $ N/A /gal.

Capital Cost for Storage Tanks: $5,000 in 1975 (year of purchase) dollars

(installed cost for underground concrete tank apportioned to surge pile)

Capital Equipment Cost for Method of Application: $72,200 in 1975 (year of purchase) dollars

(installed cost for storage tank, pumps, controls, piping, motors, and spray system)

Approx. Annual Operating and Maintenance Cost of Treatment: $8,600 in 1980 dollars (estimated)

Maintenance Problems Encountered (i.e., freezing, clogging): Freezing; plugging

Source of Water: Cooling water blowdown Degree of Water Treatment: None

TABLE C-11. MISCELLANEOUS OPERATION/DESIGN AND COST DATA FOR APPLICATION OF CHEMICAL DUST SUPPRESSANT TO STORAGE PILES

Name of Company: Bethlehem Steel

Location of Plant: Burns Harbor, Indiana

Type of Material in Storage (e.g., coal, pellets): Coal[1]

Surface Area of Storage Pile: [2] ft^2

Is Stated Surface Area Projected Area or Actual Area: [2]

Average Daily Material Throughput: 1,000[1] tons/day

Average Material Reserve: 88,000[1] tons

Treatment Methods:
Watering: ____ Chemical Suppressants or Binders: X Other: _____ (specify)

Type(s) of Chemical(s) Used: (check one or more as applicable)
Lignin Sulfonate: ____ Petroleum Resins: ____ Salts: ____ Wetting Agents: ____
Other: X (latex binder) (specify)

Trade or Chemical Name(s) of Dust Suppressant(s) Used (if any): Dow Chemical M-167 Chemical binder

Type of Diluent(s) Used (if any): Water

Application Rate: [2] gal. of [2] % solution per ft^2 of surface treated

Dilution Ratio: 55 parts of chemical to 2,000 parts water (type of diluent)

Concentration of Chemical Suppressant as Received: 100 % by weight (weight or volume)

Frequency of Application: Once per week

Basis for Frequency of Application: Subjective evaluation of effectiveness

Method of Application (e.g., sprinkler system or mobile distributor truck: Mobile distributor (spray) truck

Area Treated Annually: [2] acres/year

No. of Spray Nozzles in Operation: [3]

Type of Spray Pattern Generated: [3]

Make of Spray Nozzle(s): [3]

Model No.(s): [3]

Nozzle Capacity: [3] gpm @ [3] psig

Spray Angle: [3] °

Maximum Area of Coverage of Spray Pattern: [3] ft^2

Designer of Sprinkler System: [3]

Address: [3]

Phone No.: ( ) [3]

Est. Life Expectancy of System: [3] years

Total Capacity of On-Site Chemical Storage: [4] gal.

No. and Capacity of Storage Tanks: [4]

Cost of Concentrated Chemical Dust Suppressant Delivered to Your Plant: $4.40 /gal. (chemical)
$ /gal. (freight)

Gallons of Chemical Delivered per Shipment: 1,100 to 2,200 gal.

Gallons of Chemical Delivered per Year: 13,200 gal.[5]

Capital Cost for Storage Tanks: $[4] in [4] (year of purchase) dollars

(continued)

TABLE C-11 (concluded)

Line Items Included in Capital Cost for Storage Tanks:

$ [4] for tanks
$ [4] for installation labor
$ [4] for accessories
$ [4] for other

Construction Material for Storage Tanks (e.g., concrete or metal): [4]

Is Storage Tank Above or Below Ground: [4] Is the Tank Heated: [4]

Capital Equipment Cost for Method of Application (e.g., distributor truck): $ [3] in [3] (year of purchase) dollars

Capacity of Distributor Truck: [3] gal.

Annual Operating and Maintenance Cost of Treatment:

$ [6] in [6] (year) dollars
$ [3] per treated acre
$ [3] per actual acre

Major Maintenance Problems Encountered (e.g., freezing, clogging): [3]

Source of Water: Lake Michigan Degree of Water Treatment: Removal of solids by screening and straining

[1] The reported information is applicable to low volatile coal.

[2] This information is not readily available.

[3] The mobile distributor truck used to apply dust suppressant solution to low volatile coal piles is owned and operated by Correct Maintenance Corporation (CMC), 2000 Dombey Road, Portage, Indiana (219/762-2167). Reportedly, technical information concerning this vehicle is considered to be confidential by CMC.

[4] Dust suppressant material is received and stored in 55 gal. drums.

[5] Volume purchased during the period July 1980 through August 1981.

[6] This information is considered to be confidential by Bethlehem.

Protection Agency
Street
Chicago, Illinois 60604