PB-294 711

EPA-625/1-77-009

PROCESS DESIGN MANUAL

WASTEWATER TREATMENT FACILITIES FOR SEWERED SMALL COMMUNITIES

U. S. ENVIRONMENTAL PROTECTION AGENCY
Environmental Research Information Center
Technology Transfer

U.S. Environmental
Region 5, Library
Dearborn St
Chicago, IL 60604

October 1977

ACKNOWLEDGMENTS

This manual was prepared for the U.S. Environmental Protection Agency, Office of Technology Transfer, by the firm of Camp, Dresser & McKee, Boston, Mass., under the direction of R. E. Leffel. Major EPA contributors and reviewers were John M. Smith and James F. Kreissl of the U.S. EPA Municipal Environmental Research Laboratory, Cincinnati, Ohio, and Denis J. Lussier of the Office of Technology Transfer, Cincinnati, Ohio.

NOTICE

The mention of trade names or commercial products in this publication is for illustration purposes and does not constitute endorsement of recommendation for use by the U.S. Environmental Protection Agency.

CONTENTS

Chapter		Page
	ACKNOWLEDGMENTS	ii
	FOREWORD	xv
1	INTRODUCTION	1-1
2	FUNDAMENTAL DESIGN CONSIDERATIONS	2-1
	2.1 Introduction	2-1
	2.2 Area Served	2-5
	2.3 Population Served	2-6
	2.4 Wastewater Flow	2-7
	2.5 Wastewater Characteristics	2-23
	2.6 Odors and Other Airborne Pollutants	2-41
	2.7 Noise	2-43
	2.8 Trucked and Marine Industry Wastes	2-46
	2.9 Treatment Requirements and Effluent Disposal	2-48
	2.10 Upgrading and Enlarging Existing Plants	2-66
	2.11 Pilot- and Laboratory-Scale Testing	2-72
	2.12 Reliability Considerations	2-73
	2.13 Process Selection	2-73
	2.14 Operation and Maintenance Design Requirements	2-79
	2.15 References	2-81
3	HYDRAULIC CONSIDERATIONS	3-1
	3.1 Introduction	3-1
	3.2 Flow Considerations	3-1
	3.3 Pumping	3-12
	3.4 References	3-15
4	FLOW EQUALIZATION	4-1
	4.1 Introduction	4-1
	4.2 Variations in Wastewater Flow	4-1
	4.3 Benefits of Dry Weather Flow Equalization	4-2
	4.4 Disadvantages of Dry Weather Flow Equalization	4-7
	4.5 Methods of Equalization	4-7
	4.6 Equalization Design	4-11

CONTENTS – Continued

Chapter		Page
	4.7 Examples	4-15
	4.8 Cost of Equalization	4-21
	4.9 Case Studies	4-22
	4.10 References	4-28
5	HEADWORKS COMPONENTS	5-1
	5.1 Introduction	5-1
	5.2 Racks, Bar Screens, and Comminutors	5-2
	5.3 Grit Removal	5-2
	5.4 Oil, Grease, and Floating Solids Removal	5-3
	5.5 Preaeration	5-4
	5.6 Physical Screening	5-5
	5.7 Pumping	5-5
	5.8 Flow Measuring and Sampling	5-5
	5.9 Equalization Tanks	5-8
	5.10 Chemical Additives	5-8
	5.11 References	5-11
6	CLARIFICATION OF RAW WASTEWATER	6-1
	6.1 General	6-1
	6.2 Coagulation and Flocculation	6-1
	6.3 Solids-Contact Treatment	6-3
	6.4 Sedimentation	6-3
	6.5 References	6-10
7	ACTIVATED SLUDGE	7-1
	7.1 Introduction	7-1
	7.2 Description of Basic Processes	7-1
	7.3 Modifications for Small Communities	7-5
	7.4 Applicable Design Guidelines	7-13
	7.5 Oxygen Requirements	7-19
	7.6 Clarification	7-20
	7.7 Aeration System Design	7-28
	7.8 Nitrification	7-36
	7.9 Operation and Maintenance	7-44
	7.10 Example Design	7-47

CONTENTS – Continued

Chapter		Page
	7.11 Case Studies	7-51
	7.12 References	7-54
8	PACKAGE (PREENGINEERED) PLANTS	8-1
	8.1 General Design Considerations	8-2
	8.2 Extended Aeration Units	8-6
	8.3 Contact Stabilization Units	8-9
	8.4 Rotating Biological Contactor (RBC) Units	8-10
	8.5 Physical-Chemical Package Units	8-13
	8.6 Operation and Maintenance of Activated Sludge Package Units	8-15
	8.7 Case Studies	8-16
	8.8 References	8-24
9	FIXED GROWTH SYSTEMS	9-1
	9.1 Trickling Filters	9-1
	9.2 Rotating Biological Contactors (RBC)	9-37
	9.3 References	9-46
10	WASTEWATER TREATMENT PONDS	10-1
	10.1 Background	10-1
	10.2 Definitions and Descriptions of Wastewater Treatment Ponds	10-4
	10.3 General Design Requirements	10-5
	10.4 Facultative Pond Design	10-11
	10.5 Aerated Ponds	10-35
	10.6 Aerobic Pond Design	10-51
	10.7 Polishing Pond Design	10-55
	10.8 Microbial Cell and SS Removal from Pond Effluent	10-55
	10.9 Pathogen Removal	10-58
	10.10 Construction and Maintenance Costs	10-59
	10.11 References	10-60
11	FILTRATION AND MICROSCREENING	11-1
	11.1 Introduction	11-1
	11.2 General Types of Granular Media Filters and their Operation	11-1
	11.3 Design of Granular Media Filter Installations	11-8
	11.4 Sand Beds (Intermittent Filtration)	11-16

CONTENTS – Continued

Chapter		Page
	11.5 Microscreening	11-16
	11.6 References	11-19
12	PHYSICAL-CHEMICAL TREATMENT	12-1
	12.1 Design Considerations	12-2
	12.2 Chemicals	12-3
	12.3 Unit Operations	12-7
	12.4 Costs	12-11
	12.5 References	12-11
13	NUTRIENT REMOVAL	13-1
	13.1 General Considerations	13-1
	13.2 Phosphorus Removal	13-2
	13.3 Nitrogen Removal	13-2
	13.4 Removal of Soluble Organics	13-4
	13.5 Removal of Soluble Inorganics	13-4
	13.6 References	13-6
14	SLUDGE AND PROCESS SIDESTREAM HANDLING	14-1
	14.1 Background	14-1
	14.2 Thickening	14-4
	14.3 Stabilization	14-13
	14.4 Dewatering	14-22
	14.5 Sidestreams Produced	14-26
	14.6 Septage Handling	14-27
	14.7 Sludge Disposal	14-28
	14.8 References	14-30
15	DISINFECTION AND POSTAERATION	15-1
	15.1 Introduction	15-1
	15.2 Chlorination	15-2
	15.3 Chlorine Mixing and Contacting	15-9
	15.4 Ozonation	15-12
	15.5 Small Plant Disinfection Practice	15-18
	15.6 Postaeration	15-18
	15.7 References	15-19

CONTENTS – Continued

Chapter		Page
16	OPERATION AND MAINTENANCE	16-1
	16.1 Management and Organization	16-2
	16.2 Factors Affecting Operation	16-3
	16.3 Personnel	16-5
	16.4 Operation and Maintenance (O & M) Manuals	16-12
	16.5 Monitoring	16-18
	16.6 Laboratory Facilities	16-19
	16.7 Workshop Facilities	16-24
	16.8 Safety	16-25
	16.9 References	16-25
17	COST EFFECTIVENESS	17-1
	17.1 Background	17-1
	17.2 Cost-Effectiveness Analysis Regulations	17-1
	17.3 Energy Conservation	17-4
	17.4 Methodology	17-4
	17.5 Cost-Effectiveness of Infiltration/Inflow Reduction	17-6
	17.6 Costs	17-6
	17.7 References	17-15
18	GLOSSARY	G-1

LIST OF FIGURES

Figure No.		Page
2-1	Effects of Population on Wastewater Flows in Texas	2-8
2-2	Average Domestic Wastewater Flow Rate Versus Population As a Function of Average Assessed Valuation of Property in 1960	2-9
2-3	Upper and Lower 2.5% Prediction Limits for Average Daily Wastewater Flow Rates Versus Population As a Function of Average Assessed Valuation of Property in 1960	2-10
2-4	Daily Household Water Use	2-21
2-5	Relation of Small Plant Design to Collection System	2-22
2-6	Variations in Daily Wastewater Flow	2-24
2-7	Estimated Curves for Design Purposes Showing Relation of Discharge to Fixture Units	2-25
2-8	Schematic Diagram of Wastewater Characteristics	2-28
2-9	Hourly COD Profile	2-38
2-10	Secondary Treatment Configurations	2-75
2-11	Example Plant Flow Diagram	2-80
3-1	Methods of Wastewater Flow Division	3-3
3-2	Hydraulic Gradient–Wastewater Treatment Plant With Provision for Future Upgrading	3-7
3-3	Hydraulic Gradient–Wastewater Treatment Plant	3-8
3-4A	Hydraulic Gradient–Wastewater Treatment Plant	3-9
3-4B	Hydraulic Gradient–Wastewater Treatment Plant	3-10
3-5	Hydraulic Gradient–Wastewater Treatment Plant	3-11
4-1	Typical Dry Weather Flow and BOD Variation of Municipal Wastewater Before Equalization	4-3
4-2	Sideline Equalization	4-8
4-3	In-Line Equalization	4-9
4-4	Orbal Equalization Unit	4-10
4-5	Hydrograph of a Typical Diurnal Flow	4-15
4-6	Inplant Equalization	4-17
4-7	Side-Line Equalization	4-20
4-8	Walled Lake-Novi Wastewater Treatment Plant	4-23
4-9	Variable Depth Oxidation Ditch, Dawson, Minnesota	4-26
5-1	Typical Metering and Sampling Installations	5-7
6-1	Turbine-Type Flocculators	6-2
6-2	Solids-Contact Treatment Unit	6-4
6-3	Schematic Representation of Settling Zones	6-6
6-4	Rectangular Clarifier With Chain and Flight Sludge Collector	6-8
6-5	Circular Clarifier With Skimmer	6-9
6-6	Circular Clarifier With Inner Flocculation Compartment	6-9

LIST OF FIGURES - Continued

Figure No.		Page
7-1	Conventional Activated Sludge System	7-4
7-2	Extended Aeration Activated Sludge System	7-6
7-3	Oxidation Ditch Activated Sludge System	7-6
7-4	Carousel Oxidation Ditch at Oosterwolde, The Netherlands	7-8
7-5	Contact-Stabilization Activated Sludge System	7-10
7-6	Completely-Mixed Activated Sludge System	7-10
7-7	Sludge Production in Activated Sludge Systems Treating Domestic Wastewater	7-17
7-8	Activated Sludge Settling Data for Domestic Wastewater (20° C)	7-22
7-9	Saturation Concentration for Atmospheric Oxygen	7-31
7-10	Schematic of Installation for Submerged Turbine Aerator	7-35
7-11	Mechanical Surface Aerator	7-37
7-12	Nitrification in Completely Mixed Activated Sludge Process	7-38
7-13	Rate of Nitrification at Different Temperatures	7-40
7-14	Two Stage System for Nitrification	7-42
7-15	Single Stage Nitrification System	7-43
7-16	Temperature Effects on Denitrification	7-45
7-17	Schematic Flow Diagram, Woodstock, N.H.	7-52
8-1	Extended Aeration Treatment Plant With Air Diffusers	8-7
8-2	Extended Aeration Treatment Plant With Mechanical Aerator	8-8
8-3	Contact-Stabilization Plant With Aerobic Digester	8-11
8-4	Bio-Disc Treatment Plant	8-12
8-5	Flow Diagram for Physical-Chemical Treatment Plant	8-14
8-6	Met-Pro Physical-Chemical Package Treatment Plant	8-18
8-7	Extended Filtration Package Plant	8-21
8-8	Can-Tex Package 2-Stage (Nitrification) Activated Sludge Plant	8-23
9-1	Multiple Step Systems Using Trickling Filters	9-5
9-2	Trickling Filter Media	9-8
9-3	Percent BOD Removed vs Hydraulic Load Modular Type Media	9-12
9-4	Pounds BOD Removed vs Hydraulic Load Modular Type Media	9-12
9-5	Flow Diagrams for Small Trickling Filter Plants	9-14
9-6	Applicability of Trickling Filter Formulas	9-21
9-7	Rock MediaTrickling Filter	9-33
9-8	Plastic Media Bio-Oxidation Tower	9-34
9-9	Northbridge, Mass., Schematic Flow Diagram	9-39
10-1	Activity in Facultative Ponds	10-2
10-2	Performance of Polishing Ponds Following Secondary Treatment	10-6

LIST OF FIGURES - Continued

Figure No.		Page
10-3	Facultative Pond System Configurations	10-12
10-4	Inlets, Outlets and Baffle Arrangements	10-22
10-5	Dike and Outlet Design Details	10-24
10-6A	Example Facultative Pond System	10-30
10-6B	Example Facultative Pond System	10-31
10-7	Aerated Pond Water Temperature Prediction Nomograph for a Pond Depth of 10 Feet (For Various Loadings and Retention Times)	10-38
10-8	Power Level for Oxygen Transfer	10-42
10-9	Schematic View of Various Types of Aerators	10-44
10-10	Charleswood Demonstration Ponds, Winnipeg, Canada	10-50
10-11	System Layout for Blacksburg, Virginia, Diffused Air Aerated Pond System	10-52
10-12	BOD Removal for Blacksburg, Virginia, Diffused Air Aerated Pond System	10-52
10-13	Relationship Between Oxygenation Factor and BOD Removal in Waste Ponds	10-54
10-14	Submerged Rock Filter, California, Missouri	10-57
11-1	Filter Configurations	11-2
11-2	Gravity Filter With Float Control	11-3
11-3	Pressure Filter	11-4
11-4	Upflow Filter	11-6
11-5	Run Length vs Influent SS Concentration at Various Flow Rates	11-10
11-6	Automatic Granular Media Filter	11-13
11-7	Automatic Backwash Filter	11-15
11-8	Schematic Diagram of Microscreen Unit	11-17
14-1	Gravity Thickener	14-11
14-2	Schematic of an Air Flotation Thickener	14-12
14-3	Schematic of Aerobic Digester System	14-14
14-4	Typical Circular Aerobic Digester	14-15
14-5	Digester With Mechanical Mixer	14-20
14-6	Digester With Gas Mixing	14-21
15-1	Chloramine Contact Time Requirements	15-4
15-2	Free Chlorine Contact Time Requirements	15-4
15-3	Contact Time for 99% Kill of E. Coli at 2°-6° C in Pure Water	15-5
15-4	Relative Resistance to HOCl at 0°-6° in Pure Water	15-5
15-5	Distribution of HOCl and OCl^- in Water With Variations in pH	15-6

LIST OF FIGURES - Continued

Figure No.		Page
15-6	Gaseous Chlorination Systems	15-8
15-7	Hypochlorite Generation	15-10
15-8	Chlorine Mixing Methods	15-11
15-9	Contact Chamber With Longitudinal Baffling	15-13
15-10	Impact of Chlorine Tank Baffle Design on Actual Detention Time	15-14
15-11	Ozone System	15-16
15-12	Ozone System	15-17
15-13	Typical Postaeration Devices	15-20
16-1	Average Operation Time	16-7
16-2	Secondary Sludge and Scum Piping System—Normal WAS and Scum Pump Operations	16-13
16-3	Injector Water System	16-14
16-4	Process Flow Path	16-15
17-1	Initial Costs of Wastewater System Components	17-7
17-2	Annual Costs of Wastewater System Components	17-8

LIST OF TABLES

Table No.		Page
2-1	Quantities of Wastewater	2-11
2-2	Package Treatment Plant Sizing Data	2-13
2-3	Typical Daily Flows and BOD Considerations	2-16
2-4	Fixture Units Per Fixture or Group	2-26
2-5	Wastewater Characteristics	2-27
2-6	Organisms Found in Wastewater Treatment	2-35
2-7	Average Composition of Domestic Wastewater, mg/l	2-37
2-8	Some Chemical Substances in Industrial Wastes	2-39
2-9	Average Single Number Sound Pressure Levels	2-44
2-10	Summary of Existing Municipal Wastewater Reclamation Projects	2-64
2-11	Possible Trickling Filter Plant Modifications	2-68
2-12	Possible Activated Sludge Plant Modifications	2-70
2-13	Application of Treatment Plants for Small Communities	2-77
2-14	Operational Characteristics of Various Treatment Processes	2-78
3-1	Pumping Alternatives For Various Treatment Plant Needs	3-14
4-1	Effect of Flow Equalization on Primary Settling: Newark, New York	4-4
4-2	Principle Design Criteria, Dawson, Minnesota, Wastewater Treatment Plant	4-27
4-3	Performance Data, Dawson, Minnesota	4-28
5-1	Headworks Units	5-1
5-2	Theoretical Maximum Overflow Rates For Grit Chambers	5-4
7-1	Design Criteria of Modified Activated Sludge Processes	7-12
7-2	Commonly Used Values for Synthesis Constant a′ and Autooxidation Constant b′	7-20
7-3	Final Clarifier Criteria	7-23
7-4	Method for Solving a Bulking Problem	7-26
7-5	Return Sludge Rate Required To Maintain MLSS at 2,000 MG/L for Various SVI Values	7-27
7-6	Oxygen Transfer Capabilities of Various Aeration Systems	7-34
7-7	Summary of Conditions Advantageous for Nitrifier Growth	7-41
7-8	Woodstock, N.H., Oxidation Ditches	7-53
8-1	Commercial Biological Package Plants	8-13
8-2	Data for a Physical-Chemical Plant	8-17
8-3	Performance Evaluation of Aquatair Model P-3	8-20
8-4	Characteristics of Aquatair Package Systems	8-20

LIST OF TABLES - Continued

Table No.		Page
8-5	Package 2-Stage Nitrification Activated Sludge Plant	8-22
9-1	Trickling Filter Classifications	9-2
9-2	Comparative Physical Properties of Trickling Filter Media	9-9
9-3	Summary of Example Designs	9-22
9-4	Northbridge, MA, Rock Trickling Filters	9-38
10-1	BOD_5:BOD_u Ratio Effects of k Values	10-8
10-2	Evaluation of k Values for the Field Lagoons at Fayette, Missouri	10-8
10-3	Recommended Design Criteria Facultative Wastewater Treatment Ponds	10-13
10-4	Biological Activity Data for Ponds	10-14
10-5	Approximate Values of Solar Energy	10-16
10-6	Belding, Michigan, Intermittent Discharge Pond System	10-26
10-7	Types of Aeration Equipment for Aerated Ponds	10-43
10-8	Effluent Concentrations for Charleswood Demonstration Ponds, Winnipeg, Canada, 21 Month Average	10-48
10-9	Design Criteria: Charleswood Demonstration Ponds	10-49
10-10	Design Criteria for Blacksburg, Virginia, Diffused Air Aerated Pond System	10-51
10-11	Operating and Maintenance Relationships in the Form $Y = aX^b$	10-59
14-1	Average Quantities of Sludge	14-5
14-2	Characteristics of Various Sidestreams Primary and Activated Sludge Treatment Plants	14-7
14-3	Gravity Thickener Loadings	14-9
14-4	Characteristics of Supernatant From Aerobic Digesters	14-17
14-5	Characteristics of Anaerobic Digester Supernatants	14-22
14-6	Criteria for the Design of Sandbeds	14-24
14-7	Average Characteristics of Septage	14-28
16-1	Common Factors Affecting Operations	16-4
16-2	Typical Employee Performance Matrix for Extended Aeration Activated Sludge Plant	16-8
16-3	Partial Listing of Schools and Training Programs for Plant Operators	16-10
16-4	Possible References for an Operator's Library	16-16
16-5	Desired Detail on Each Process System in O&M Manual	16-17
16-6	Typical Sampling and Testing Program	16-20
16-7	Minimum Laboratory Equipment Needs for Typical 1 MGD or Smaller Wastewater Treatment Plants Where Backup Laboratory Facilities Are Not Easily Available	16-21

LIST OF TABLES - Continued

Table No.		Page
16-8	Laboratory Equipment List for Monitoring	16-22
17-1	6.125 % Compound Interest Factors	17-2
17-2	Cost Indices (Average Per Year)	17-9
17-3	Estimated Capital Costs for Alternate Treatment Processes With a Design Flow of 1 mgd	17-11
17-4	Estimated Total Annual Costs for Alternative Treatment Processes With a Design Flow of 1 mgd	17-12
17-5	Construction Costs for Unit Processes for Wastewater Treatment Plants	17-13
17-6	Cost Functions of Municipal Waste Treatment	17-14

FOREWORD

The formation of the United States Environmental Protection Agency marked a new era of environmental awareness in America. This Agency's goals are national in scope and encompass broad responsibility in the area of air and water pollution, solid wastes, pesticides, and radiation. A vital part of EPA's national water pollution control effort is the constant development and dissemination of new technology for wastewater treatment.

It is now clear that only the most effective design and operation of wastewater treatment facilities, using the latest available techniques, will be adequate to meet the future water quality objectives and to ensure continued protection of the nation's waters. It is essential that this new technology be incorporated into the contemporary design of waste treatment facilities to achieve maximum benefit of our pollution control expenditures.

The purpose of this manual is to provide the engineering community and related industry a new source of information to be used in the planning, design and operation of present and future wastewater treatment facilities for sewered small communities. It is recognized that there are a number of design manuals, manuals of standard practice, and design guidelines currently available in the field that adequately describe and interpret current engineering practices as related to traditional plant design. It is the intent of this manual to supplement this existing body of knowledge by describing new treatment methods, and by discussing the application of new techniques for more effectively removing a broad spectrum of contaminants from wastewater.

Much of the information presented is based on the evaluation and operation of pilot, demonstration and full-scale plants. The design criteria thus generated represent typical values. These values should be used as a guide and should be tempered with sound engineering judgement based on a complete analysis of the specific application.

This manual is one of several available through the Technology Transfer Office of EPA to describe recent technological advances and new information. Future editions will be issued as warranted by advancing state-of-the-art to include new data as they become available, and to revise design criteria as additional full-scale operational information is generated.

Companion publications describing treatment alternatives for non-sewered communities are available in the form of Technology Transfer Seminar Handouts. They may be obtained by writing:

U.S. EPA
ERIC
26 W. St. Clair
Cincinnati, Ohio 45268

CHAPTER 1

INTRODUCTION

1.1 Background of Wastewater Treatment

Historically, treatment of wastewater in the United States has been a catchup phenomenon employed only when required by existing legislation to protect the public health. Communities have generally been reluctant to bear the high capital and operating cost for wastewater treatment in excess of the minimum requirements.

During the 19th century public concern for the effects of raw wastewater discharge on the health and well-being of expanding population increased, and communities began to plan for and construct sewage collection and treatment systems. These earlier treatment processes included screens, grit chambers, settling tanks, anaerobic digestion, Imhoff tanks, trickling filters, and activated sludge. Disinfection, when employed, was largely by chlorination.

In the 1940's and 1950's, existing processes were refined and improved and additional processes were developed to the extent that they could be put into general use. Included in the latter were facultative stabilization ponds, oxidation ditches, ponds, extended aeration, contact stabilization, high-rate filters, and slow sand filters. Preengineered "package" treatment units came into relatively common use for the less than 1-mgd wastewater treatment plant. New processes during these years for sludge treatment included vacuum filtration, centrifugation, and incineration.

In the 1960's other new processes emerged, including aerated stabilization ponds, rotating biological disks, aerobic digestion of sludge, microscreens, physical-chemical treatment, phosphorus and nitrogen removal, and wet oxidation of sludge. However, some of these are not yet used extensively for smaller treatment plants. For many years, the disposal of wastewater (treated or untreated) into surface waters was considered a legal use of such waters. Also, disposal of sludge and wastewater on the land, irrespective of its effects on the soils or underlying ground water, was considered acceptable. As these practices increased and the self-purification capacities of waters were exceeded, more and more nuisance conditions in surface waters became evident.

Water pollution control laws were passed (Water Quality Act of 1965) to maintain water quality standards that permitted accepted water uses for the receiving waters. Under these laws, the States established the best uses for the different receiving waters within their boundaries, and required only treatment of wastewater sufficient to meet the specific receiving water quality standards. The Federal Government then established guidelines and reviewed plans of facilities that were to be partially financed by Federal funds. This method of pollution control proved inadequate, since the condition of surface and ground water in many locations continued to deteriorate. Eutrophication, fish kills, oil spills, ocean waste dumping, and damage to ecosystems were becoming excessive, and public groups became more insistent on better control of wastewater discharges.

Under the 1972 Federal Water Pollution Control Act Amendments, all publicly owned treatment facilities must meet, as a minimum, Federal secondary treatment effluent standards. In addition, where State receiving water quality standards require even better effluents, advanced treatment must be given for further reduction of such pollutants as phosphorus, ammonia, nitrates, compounds of chlorine, toxic substances, excessive oxygen demands, or excessive solids. The reuse of wastewater, after treatment, for industrial uses and irrigation is becoming more common. Other water conservation measures to reduce the amount of wastewater receiving costly treatment are also beginning to appear. Some surface waters that receive treated wastewater are now showing improvement and beginning to return to their natural quality.

1.2 Small Plants

Treatment plants smaller than 1-mgd capacity and their discharges have not received as much attention by community, State, or Federal governments as the larger, metropolitan plants. Small community budgets for operation and maintenance of their treatment plants have often been given a low priority, resulting in part-time operation by inadequately trained personnel. The result has been the proliferation of many small unreliable treatment systems that too often do not meet effluent requirements.

Smaller plants are often located on smaller streams or lakes, or serve recreational areas where receiving water quality is very high. In these situations, the discharge of inadequately treated wastewater from even the smallest plants for a relatively short period can cause severe damage. Small plants must therefore be designed, constructed, operated, and maintained as efficiently and reliably as the larger plants.

1.3 Goals

The design goal for small wastewater treatment plants is to meet Federal and State effluent and water quality standards reliably while:

1. Utilizing processes that require a minimum of operator time
2. Providing equipment that is relatively maintenance free
3. Operating efficiently through a wide range of hydraulic and organic loadings
4. Using a minimum of energy
5. Meeting emergencies, such as biological process upsets and equipment failures, without damage to the receiving waters, or to the soil if disposal is to the land
6. Conserving and improving environmental factors and natural resources

CHAPTER 2

FUNDAMENTAL DESIGN CONSIDERATIONS

2.1 Introduction

The purpose of a wastewater treatment works is to remove impurities to such an extent that the treated effluent will meet State and Federal requirements and be suitable for disposal or reuse. Both the process of removing objectionable constituents from the wastewater and the final disposal must be accomplished in an environmentally acceptable manner. This chapter describes the more important factors relevant to meeting these goals at smaller treatment works and how they are considered in the overall design.

2.1.1 Fundamental Approach

The design of a wastewater treatment plant is based on the expected volume and kind of raw wastewater and on the required effluent limitations. The initial design step, after probable influent characteristics and effluent requirements have been determined, is tentatively to select alternative processes to be used at the available treatment plant sites. This part of the design is perhaps the most critical, because it necessitates a complete analysis of the collected data, as well as an understanding of each available alternative and how each will fit into the overall design.

2.1.2 Design Differences Between Small and Large Plants

Small wastewater treatment plants are used in localities where it is not possible or economically feasible to connect to a larger wastewater treatment system. Climate, topography, distances between communities, and political boundaries are also considerations in choosing an independent small treatment plant. Sometimes a community must pretreat its waste before the waste can be discharged to a centralized system. Localities where small plants are used would include farms, isolated rural homes, fishing and hunting cabins, resort areas, schools, suburban housing developments, trailer parks, highway rest areas, tourist parks, work camps, hospitals, and ports. This manual is primarily concerned with the domestic wastewater from small communities, although many of the same principles apply to treatment works for any type of inhabited locality.

The fluctuation in volume and the characteristics of wastewater discharges cause more difficulty for a small than for a large community. Wastewater flow from small communities will generally have greatly accentuated peaks and minimums. Small sources sometimes exhibit a much stronger waste in terms of suspended solids, organic matter, nitrogen, phosphorus, and/or grease, particularly if septage is added to the wastewater being treated. Toxic materials may be present in septage but can often, if pretreated, be handled by a properly designed small plant. Seasonal variations in flow because of high groundwater level (which could more than double the flow for several months) can make multiple treatment units necessary at small plants. Some processes are highly sensitive to temperature or precipitation and thus cannot be used in some localities. A more detailed discussion of these

variations, including causes and effects on a plant, is given later in this chapter.

The operation and maintenance requirements of treatment plants also vary with plant size. Usually, the smaller the plant the smaller the budget for operation and maintenance. Larger plants can more easily justify employment of a full-time crew to operate and maintain the plant; however, in some smaller plants only a part-time operator may be economically feasible. Possible solutions to this problem will be discussed in Chapter 16.

Small wastewater treatment plants often must meet specific effluent requirements, especially if 1) the effluent is discharged to a small watercourse, therefore requiring a higher than secondary degree of treatment; 2) the effluent will be directly or indirectly reused; or 3) the effluent-receiving stream requires the removal of a specific constituent.

In summary, effluent requirements, variations in the flow and the characteristics of the wastewater, availability of well-trained operation and maintenance personnel, plant location, climate, and availability of funds are the major factors to be considered in the design of a small plant.

2.1.3 Design Periods and Stages

It is general engineering practice to select a design period of 10 to 20 years from the initiation of the design phase for wastewater treatment works (1). Sometimes the design period for small plants is only 4 to 5 years. (An example of this would be the use of small plants in suburban areas to meet effluent limitations until interceptors and centralized metropolitan treatment facilities are constructed and placed in operation.) In selecting a design period, the design engineer must weigh factors such as the type and degree of expected community development, current and projected interest rates, the economic level of the community involved and its willingness to pay for wastewater treatment.

An overextended period would result in excessive expense which could have been deferred for several years for unused capacity. Consequently, the plant would operate at less than peak efficiency because of underloading. On the other hand, too short a period would result in a plant that might be overloaded in a relatively short time, and a design that could not take advantage of any possible "economies of scale." A slightly underloaded plant is better than an overloaded plant, particularly if overloading may cause degradation of the environment; therefore, care must be taken to insure that the plant is safely adequate.

An efficient approach to this problem is the use of stepped development, to increase the range of possible designs and still allow rural or underdeveloped communities to construct the initial facilities. In this way, the financial burden on the existing population is reduced, and the plant can develop to meet community needs. Many of the available packaged plants (preengineered, factory-fabricated plants) have been designed with this in mind—they can be expanded by adding similar units, by using initially unused compartments, and by adding different units that improve the degree of treatment. Some of these packaged plants can be used temporarily in one location and then moved to another if designed for such use in multiple locations.

Another reason for not designing for too long a time is that many of the treatment units used in smaller plants are standard items that are constantly being improved. Such improvements mean many of the units become inefficient (compared to newer units) with time, and must be phased out of production, and can result in problems in replacing or repairing worn or broken equipment.

2.1.4 Site Planning and Other Environmental Considerations

Traditionally, site and route selection for wastewater collection and treatment facilities has been concerned primarily with sites that would permit the flow of wastewater by gravity. It has often been possible to locate treatment plants in isolated areas where occasional plant nuisances would not seriously affect adjacent neighborhoods. Spreading urbanization, however, and the increasing need to provide wastewater treatment within existing urban areas would require the use of sites in, or rights-of-way through, developed neighborhoods and commercial areas.

The objective of an environmental assessment, as now required by Public Law 92-500, is to minimize any possible adverse effects of the facility on the environment. An environmental assessment is not only concerned with the land use planning and zoning aspects of siting but also with odor, air pollution, noise, lighting, architectural design, landscaping, and other environmental factors.

An environmental analysis of a site, which includes evaluation of the physical, ecological, esthetic, and social aspects of the environment existing at the site, provides the basis for the design of alternative solutions. In addition, requirements for existing and proposed land use, zoning, and planning must be considered in developing the alternatives (2) (3).

The environmental evaluation process should begin early in the planning stage. First, it takes a substantial period of time to do an adequate environmental evaluation, even in cases in which the total amount of effort required is small. (The lengthy period results from delays in assembling pertinent data, interviewing people, observing environmental conditions several times during a year, etc.). Second, the environmental evaluation should have some impact on the initial assumptions and on the development and screening of alternatives before facilities design is begun.

Alternatives may involve various feasible sites, flow reduction measures (including the correction of excessive infiltration or inflow), the treatment of overflows, alternative system configurations, land treatment or reuse of wastewater, phased development of facilities, or improvements in operation and maintenance. The U.S. EPA requires that such alternatives be considered for any project in order for it to be eligible for funding (3).

The alternatives must be judged in terms of their net environmental effect. Treatment of pollutants should benefit the local water quality problem. Abatement practices to restore surface water should not shift the environmental problem to other media such as groundwater, which is more difficult to treat (3). Emphasis should be focused on preventive measures as well as on abatement or corrective measures.

To be considered are multiple use of facility sites and rights-of-way, such as:

Pumping stations	Power generation stations
Pedestrian and bicycle paths	Transportation centers
Municipal incinerators	Training centers
Ecosystems and conservation areas	Emergency public medical facilities
Police or fire protection units	Recreational open space
Public works garages	Waterfront access

The possible impacts, both beneficial and detrimental, of the interceptor and sewer systems on land use development must be considered in the design of these systems. Growth in an area also may be stimulated beyond the existing rate of growth after wastewater collection and treatment facilities are constructed. On the other hand, if wastewater facilities are not adequate, or are not easily accessible, growth will most likely be stifled. Effects of proposed construction on both short- and long-range development should be evaluated in the siting analysis.

Conservation of energy is as important as conservation of money. Some processes, such as ponds, use little energy. Designing structures to minimize heat loss is important. Underground structures can be kept at a uniform temperature more easily than structures above ground. Maximum advantage should be taken of the sun, topography, and of windscreens to reduce freezing and chilling.

Federal effluent requirements and State receiving-water quality standards can only be met by sizing wastewater facilities to meet the demands of the community reliably, at least until the next stage of construction is expected to be completed. Costs of unused standby capacity to be paid for with inflated currency must be considered in determining the design period.

Flow predictions must be based on existing and probable future zoning and land use, and should consider local, regional, and State land use, transportation, utility, and business or development plans. Differences between existing land use and proposed plans should be reconciled with the appropriate public planning and engineering agencies and interested citizen groups. Prediction of growth patterns and regional configurations, with their attendant wastewater flows, requires reasonable estimates of both low and high options, verified by local regional officials and private developers.

Some of the more important environmental factors that may be affected if a wastewater facility is not satisfactorily designed, constructed, maintained, or operated are listed below. A discussion of these factors is presented in reference (1).

1. Locating the facilities in a location compatible with such works.
2. Arranging the landscaping and architecture so as not to disturb neighborhood esthetics.
3. Designing the facilities so as not to interfere with flood plain storage or with natural drainage.

4. Utilizing construction methods that do not affect the native ecological systems; cause air pollution, erosion, or flooding; excessively exceed the ambient noise level; or cause damage during blasting and pile driving operations.
5. Scheduling trucking or truck routes compatible with existing conditions.
6. Preventing the entrance of polluted water overflows or leakages into surface or subsurface waters.
7. Siting construction and operation lighting so as not to cause a nuisance.
8. Designing facilities to prevent the escape of odors or air pollutants, and providing means for control of potential odors or of air pollutant emissions.
9. Designing facilities to prevent noise levels detrimental to the neighborhood or to the workers.
10. Providing for efficient operation and maintenance of the facilities and grounds in a manner that will not have an adverse impact on the environment.

For more information on site planning, see references (2) through (13).

2.2 Area Served

The area served by a small treatment plant plays a significant part in the determination of flow and wastewater characteristics. The limits of this area may be defined by natural drainage basins, political boundaries, specific wastewater treatment requirements, or any combination of these. Within this area, the existing and planned future land use and accompanying resident population are the prime determinants in estimating the expected volume and characteristics of the wastewater to be treated.

First, the existing land usage must be assessed and any available data collected. In portions of the area that have reached saturation population or are completely developed with commercial or industrial sites, only existing data may be needed to determine expected wastewater flow and its probable characteristics, unless the area is expected to be redeveloped. If redevelopment occurs, the changes in land use may change the flow and characteristics of the wastewater.

Most small wastewater treatment facilities are located in rural or suburban areas where large portions of the service area are underdeveloped or being developed. Both local and regional trends in development of the area, as well as possible future expansion of the plant, must be examined. Local trends should include the economic development and change in tax base relative to construction costs and taxes. Regional trends should include the location of various economic activities such as shopping areas or industrial parks, the rate of growth for suburban areas, changes in political boundaries, possible annexation or service agreements with other communities, status of transportation systems, and possible use of other regional utilities. Other sources of this information include regional plans, zoning maps and reports, engineering investigations, reports by regulatory agencies, and actual investigations and examinations of the area.

Much of this information on area development should be available in the comprehensive State, region, and community wastewater planning reports required under Public Law 92-500.

2.3 Population Served

Population is a major factor affecting wastewater flow and characteristics, and the density of the population living or working in an area has probably the most significant immediate effect. Other factors related to population, such as socioeconomic status, however, can also affect the wastewater quality and flow.

2.3.1 Population Data

Population data are available from many sources:

1. U.S. Census Bureau reports.
2. Planning agencies (including municipal, State, regional, or county agencies).
3. Utility records (installation records from telephone, electricity, gas, water, and wastewater utilities).
4. Building permits.
5. School records.
6. Chamber of Commerce.
7. Voter registration lists.
8. Post Office records.
9. Newspaper records.

2.3.2 Changes in Population

There are three primary causes of change in population: 1) the birth rate, which is affected by cultural norms, sociopsychological factors, and socioeconomic status; 2) the death rate, which is affected by living conditions and available medical technology; and 3) migration, which is affected by people trying to improve their living conditions by moving into or out of the community.

Some of the factors involved in population migration are the desire for better economic opportunities, the availability of land for development, and the desire for benefits available in a new area (such as transportation for workers, materials, and products; education; and public utilities). The initiative shown by a municipality for planning housing developments and for attracting new industry is also an important factor in population migration.

2.3.3 Population Projections

Population projections are the basis for all major planning decisions, and adequate time should be allowed for this important work. For wastewater treatment plant design, projections of future populations are used to calculate expected quantities of wastewater and its constituents. The methods commonly used in population projections include:

1. Graphical.
2. Mathematical (arithmetic or geometric).
3. Ratio and correlation.

4. Component.
5. Employment forecast.

The selection of a particular method will depend on the amount and type of data available and the characteristics of the area itself. Regardless of the method used, most experts agree that the accuracy of projections is an inverse function of length of period, area, size, and rate of population change. The area served by a small plant, although normally small, may change at a high rate. Great care should be taken in forecasting future trends. To aid in the selection of the best method for use in a given area, the designer should consult references (8), (9), (14), (15), and (16).

2.4 Wastewater Flow

The standard base reference in sizing wastewater treatment units is the average daily flow—the total quantity of liquid tributary to a plant in 1 year divided by the number of days in a year. Design average flow is the annual average daily flow during the last year of a given design period. Maximum daily flow is the largest volume expected during a 24-hour period of the design year; peak flow is the maximum expected flow during that period. Minimum daily flow is the smallest volume expected during a 24-hour period of the year; extreme minimum flow is the minimum expected flow during that period. Peak flow is important in the hydraulic sizing of conduits and other units to eliminate flooding. The maximum pumping capacity will normally be established by the peak flow. Minimum flows are important in sizing conduits to prevent settling of solids at low flow. Average flows are used for sizing sludge handling facilities or determining chemical quantities. A description of the various flows, along with their determination and use, is given in subsection 2.4.7.

An analysis of wastewater flows from smaller communities in Texas was completed in 1970 (17). These averages are plotted in Figure 2-1. Figure 2-2 shows the average daily domestic wastewater flow rates as a function of average assessed property value in 1960 and population size (18). Figure 2-3 shows peak and minimum flow rates as a function of population size and average assessed valuation of property in 1960 (18).

The first of two basic methods of estimating wastewater flows is to gage the flows in an existing system and project these flows for the expected development of the area. The second method is to estimate the total flow from each of the various components of the served area, such as domestic, commercial, institutional, industrial, stormwater, and groundwater contributions. Wastewater flows for the various components are often estimated using the average values from one or more of many references, as shown in Tables 2-1, 2-2, and 2-3 (19). Other similar tables can be found in references (20) and (21). These values have been developed only as a guide. The actual values can vary greatly, depending on factors that will be discussed below. In all cases, any values used in the design should be checked with the regulatory agencies.

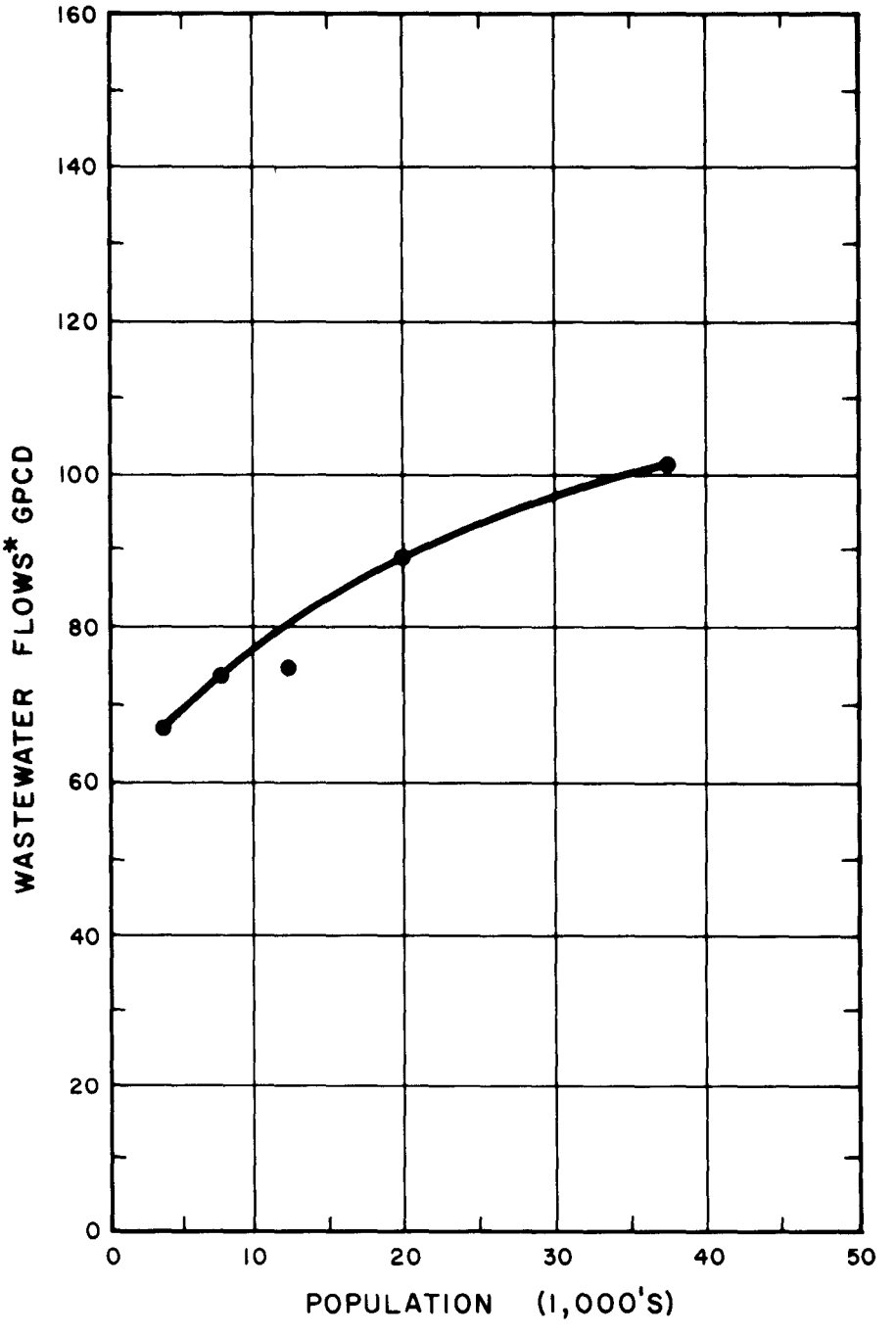

*AVERAGE GEOMETRIC DEVIATION WAS APPROXIMATELY 1.4 TO 1.6.

FIGURE 2-1

EFFECTS OF POPULATION ON WASTEWATER FLOWS IN TEXAS (17)

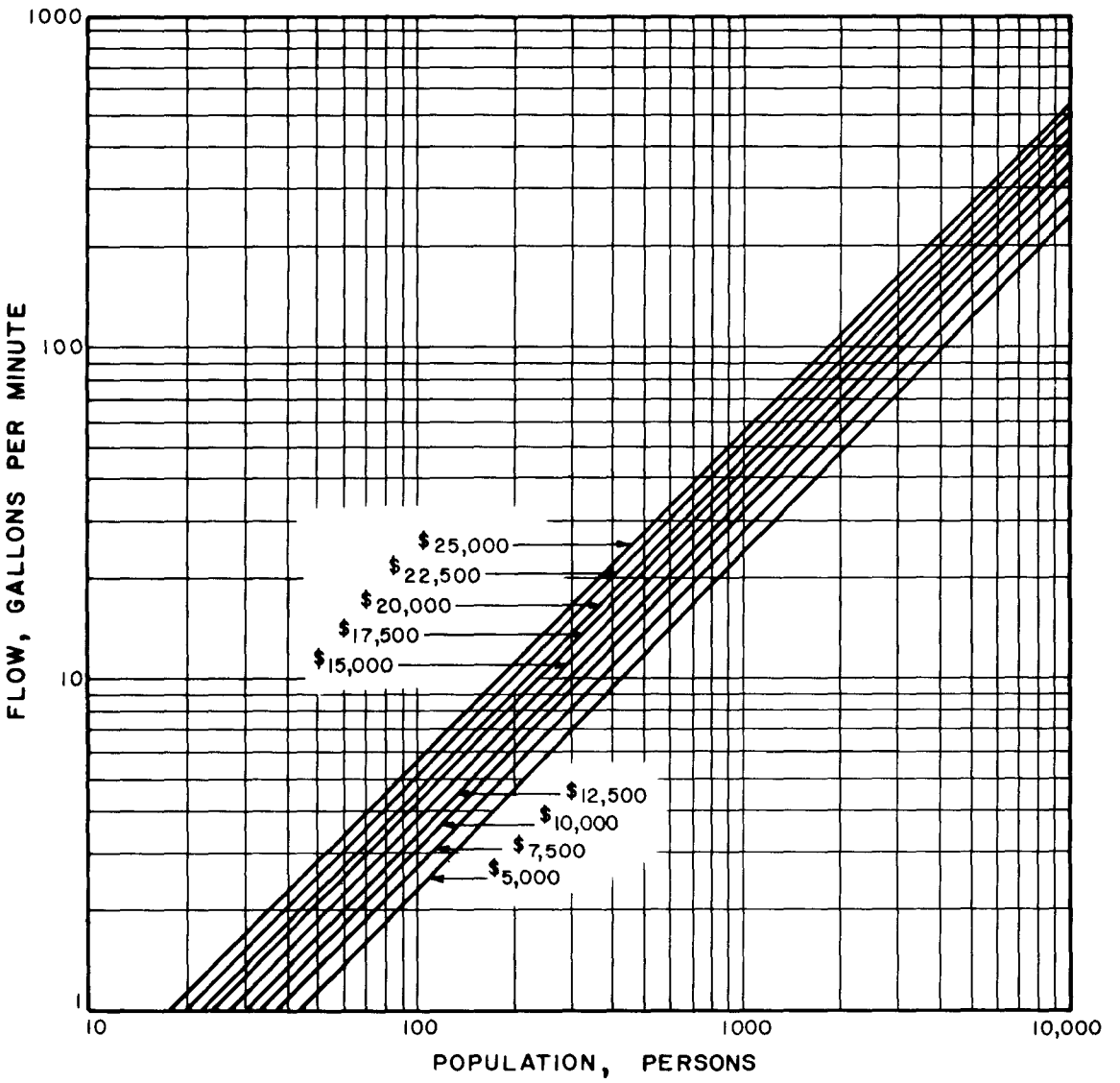

FIGURE 2-2

AVERAGE DOMESTIC WASTEWATER FLOW RATE VERSUS POPULATION AS A FUNCTION OF AVERAGE ASSESSED VALUATION OF PROPERTY IN 1960 (18)

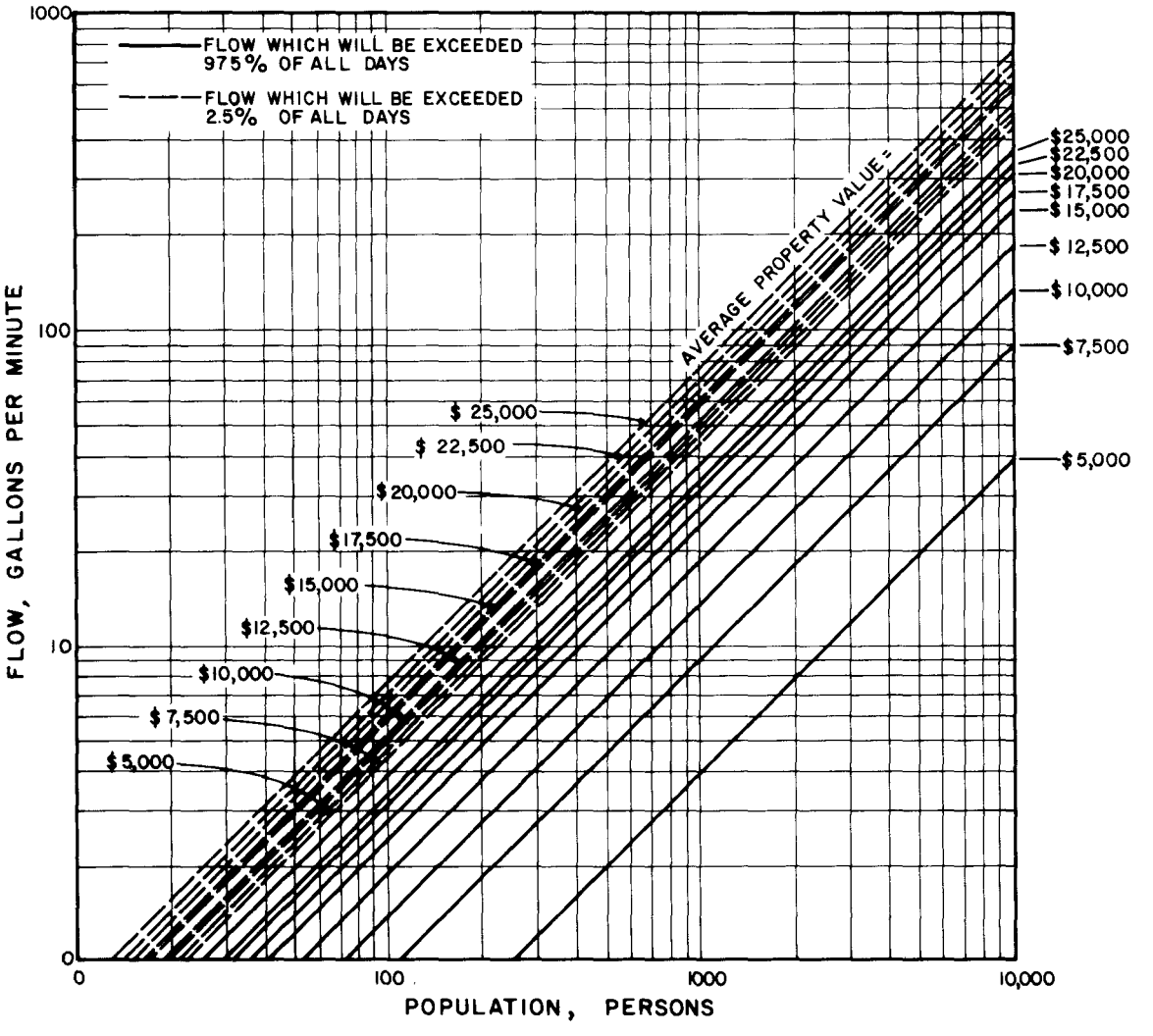

FIGURE 2-3

UPPER AND LOWER 2.5% PREDICTION LIMITS FOR AVERAGE DAILY WASTEWATER FLOW RATES VERSUS POPULATION AS A FUNCTION OF AVERAGE ASSESSED VALUATION OF PROPERTY IN 1960 (18)

TABLE 2-1

QUANTITIES OF WASTEWATER (19)

Type of Establishment	Gallons Per Person Per Day[1] (Unless Otherwise Noted)
Airports (Per Passenger)	5
Apartments, Multiple Family (Per Resident)	60
Bathhouses and Swimming Pools	10
Camps	
Campground With Central Comfort Stations	35
With Flush Toilets, No Showers	25
Construction Camps (Semipermanent)	50
Day Camps (No Meals Served)	15
Resort Camps (Night and Day) With Limited Plumbing	50
Luxury Camps	100
Cottages and Small Dwellings With Seasonal Occupancy	50
Country Clubs (Per Resident Member)	100
Country Clubs (Per Nonresident Member Present)	25
Dwellings	
Boarding Houses	50
Additional for Nonresident Boarders	10
Luxury Residences and Estates	150
Multiple Family Dwellings (Apartments)	60
Rooming Houses	40
Single Family Dwellings	75
Factories (Gallons Per Person, Per Shift, Exclusive of Industrial Wastes)	35
Hospitals (Per Bed Space)	250+
Hotels With Private Baths (Two Persons Per Room)	60
Hotels With Private Baths	50
Institutions Other Than Hospitals (Per Bed Space)	125
Laundries, Self-service (Gallons Per Wash, i.e., Per Customer)	50
Mobile Homes Parks (Per Space)	250
Motels With Bath, Toilet, and Kitchen Wastes (Per Bed Space)	50
Motels (Per Bed Space)	40
Picnic Parks (Toilet Wastes only) (Per Picnicker)	5
Picnic Parks With Bathhouses, Showers, and Flush Toilets	10
Restaurants (Toilet and Kitchen Wastes Per Patron)	10
Restaurants (Kitchen Wastes Per Meal Served)	3
Restaurants Additional For Bars and Cocktail Lounges	2
Schools	
Boarding	100
Day, Without Gyms, Cafeterias, or Showers	15

TABLE 2-1 (continued)

QUANTITIES OF WASTEWATER (19)

Type of Establishment	Gallons Per Person Per Day[1] (Unless Otherwise Noted)
Schools (continued)	
Day, With Gyms, Cafeterias and Showers	25
Day, With Cafeteria, But Without Gyms, or Showers	20
Service Stations (Per Vehicle Served)	10
Swimming Pools and Bathhouses	10
Theaters	
Movie (Per Auditorium Seat)	5
Drive-in (Per Car Space)	5
Travel Trailer Parks Without Individual Water and Sewer Hookups (Per Space)	50
Travel Trailer Parks With Individual Water and Sewer Hookups (Per Space)	100
Workers	
Construction (at Semipermanent Camps)	50
Day, at Schools and Offices (Per Shift)	15

[1] 1 gallon/person/day = 3.785 liters/person/day.

TABLE 2-2

PACKAGE TREATMENT PLANT SIZING DATA (21)

Type of Facility	Flow Rate gpcd[1]	BOD_5 lb/cap/day[2]	Runoff hr	Shock Load Factor[3]
Airports (Per Passenger)	5	0.020	16	low
Airports (Per Employee)	15	0.050	16	low
Apartments–Multiple Family	75	0.175	16	medium
Boarding Houses	50	0.140	16	medium
Bowling Alleys–Per Lane (No Food)	75	0.150	8	medium
Campgrounds–Per Tent or Travel Trailer Site– Central Bathhouse	50	0.130	16	medium
Camps–Construction (Semipermanent)	50	0.140	16	medium
Camps–Day (No Meals Served)	15	0.031	16	medium
Camps–Luxury	100	0.208	16	medium
Camps–Resort (Night and Day) With Limited Plumbing	50	0.140	16	medium
Churches–Per Seat	5	0.020	4	high
Clubs–Country (Per Resident Member)	100	0.208	16	medium
Clubs–Country (Per Nonresident Member Present)	25	0.052	16	medium
Courts–Tourist or Mobile Home Parks With Individual Bath Units	50	0.140	16	low
Dwellings–Single-Family	75	0.170	16	medium
Swellings–Small, and Cottages With Seasonal Occupancy	50	0.140	16	medium
Factories–(Gallons, Per Person, Per Shift, Exclusive of Industrial Wastes), No Showers	25	0.073	8	high
Add for Showers	10	0.010		
Hospitals	250[3]	0.518	16	medium

TABLE 2-2

PACKAGE TREATMENT PLANT SIZING DATA (21)

Type of Facility	Flow Rate gpcd[1]	BOD_5 lb/cap/day[2]	Runoff hr	Shock Load Factor[3]
Hotels–With Private Baths (Two Persons Per Room)	60	0.125	16	medium
Institutions–Other Than Hospitals (Nursing Homes)	125	0.260	16	medium
Laundromat	400	varies	12	high
Motels–(Per Bed Space)	40	0.083	16	medium
Motels–With Bath, Toilet, and Kitchen Wastes	50	0.140	16	medium
Offices–No Food	15	0.050	8	high
Parks–Picnic (Toilet Wastes Only) (Gallons Per Picnicker)	5	0.010	8	high
Parks–Picnic, With Bathhouses, Showers, and Flush Toilets	10	0.021	8	high
Restaurants–(Kitchen Wastes Per Meal Served)	7	0.015	8-12	high
Restaurants–(Toilet and Kitchen Wastes Per Patron)	10	0.021	8-12	high
Restaurants–Additional for Bars and Cocktail Lounges	3	0.006	8-12	high
Schools–Boarding	100	0.208	16	medium
Schools–Day, Without Cafeterias, Gyms, or Showers	15	0.031	8	high
Schools–Day, With Cafeterias, But No Gyms or Showers	20	0.042	8	high
Schools–Day, With Cafeterias, Gyms and Showers	25	0.052	8	high
Service Stations–(Per Vehicle Served)	12	0.021	8	high
Shopping Centers–(No Food–Per Sq Ft)	0.1		16	medium
Shopping Centers–(Per Employee)	15	0.050	16	medium
Stores–(Per Toilet Room)	400	0.832	16	medium
Swimming Pools and Bathhouses	10	0.021	8	high
Sports Stadiums	5	0.020	4-8	very high

TABLE 2-2

PACKAGE TREATMENT PLANT SIZING DATA (21)

Type of Facility	Flow Rate gpcd[1]	BOD_5 lb/cap/day[2]	Runoff hr	Shock Load Factor[3]
Theatres–Drive-in (Per Car Space)	5	0.010	6	high
Theatres–Movie (Per Auditorium Seat)	5	0.010	6	high
Trailer Parks–Per Trailer	150	0.350	16	medium

[1] 1 gal/capita/day = 1 liter/capita/day

[2] 1 lb/capita/day = 0.4536 kg/capita/day

[3] The shock load factor would be difficult to quantify, but is included as an indication of possible conditions causing high flow or strong concentrations.

TABLE 2-3

TYPICAL DAILY FLOWS AND BOD CONSIDERATIONS[1] (23)

Class	Persons per Unit	Daily Flow gal/person[2]	BOD lb/person Average	BOD lb/person With Garbage Grinder	Average Wastewater BOD mg/l[3]
Subdivisions, Better	3.5	100	0.17	0.25	205
Subdivisions, Average	3.5	90	0.17	0.23	220
Subdivisions, Low Cost	3.5	70	0.17	0.20	290
Motels, Hotels, Trailer Parks	2.5	50	0.17	0.20	400
Apartment Houses	2.5	75	0.17	0.25	225
Resorts, Camps, Cottages	2.5	50	0.17	0.20	400
Hospitals	Per Bed	200	0.30	0.35	200
Factories or Offices	Per Person	20	0.06	–	360
Factories, Including Showers	Per Person	25	0.07	–	340
Restaurants	Per Meal	5	0.02	0.06	450
Schools, Elementary	Per Student	15	0.04	0.05	320
Schools, High	Per Student	20	0.05	0.06	360
Schools, Boarding	Per Student	100	0.17	0.20	205
Swimming Pools	Per Swimmer	10	0.03	–	360
Theatres, Drive-In	Per Stall	5	0.02	–	450
Theatres, Indoor	Per Seat	5	0.01	–	250
Airports, Employees	Per Employee	15	0.05	–	450
Airports, Passengers	Per Passenger	5	0.02	–	480

TABLE 2-3

TYPICAL DAILY FLOWS AND BOD CONSIDERATIONS[1] (23)

Class	Persons per Unit	Daily Flow gal/person[2]	BOD lb/person Average	BOD lb/person With Garbage Grinder	Average Wastewater BOD mg/l[3]
Bars, Employees	Per Employee	15	0.05	–	450
Bars, Customers	Per Customer	2	0.01	–	800
Dairy Plants	Per 1,000 lb Milk	100-250	0.56	to 1.66	650-2000
Public Picnic Parks	Per Picnicker	5-10	0.01	–	250
Country Clubs, Residents	Per Resident	100	0.17	0.25	205
Country Clubs, Members	Per Member	50	0.17	0.20	400
Public Institutions (nonhospital)	Per Resident	100	0.17	0.23	205

[1] Consult with your State and local health department or pollution control agency for specific data.
[2] 1 gal = 3.785 liters.
[3] 1 lb BOD = 0.454 kg BOD.

2.4.1 Domestic Component

The average wastewater flow from small residential areas is normally derived from the population density times the estimated per capita wastewater flow rate. If available, water records may be used to determine per capita consumption, and from this, per capita wastewater flow can be estimated. The proportion of municipal water supply that reaches the sewer is normally about 60 to 80 percent of consumption, depending on climate (20). However, the percentage can vary from as low as 40 to greater than 100 and is affected by such factors as leakage, lawn sprinkling, swimming pools, firefighting uses, consumers not connected to sewers, infiltration, and water from private sources discharged to the sewer.

2.4.2 Commercial Component

In small communities with only a small amount of commercial development, the commercial contribution can be assumed to be included in the per capita domestic wastewater flow. In areas where commercial development is significant, the wastewater quantities can be estimated in terms of gpd/acre (l/d·ha), based on comparative data from existing developments. Commercial wastewater flow can vary greatly, and thus a careful comparison of commercial areas is important. Factors such as the amount and type of water-cooled air conditioning utilized can greatly influence the estimated wastewater flow.

2.4.3 Institutional and Recreational Components

Institutions such as hospitals, schools, or prisons, and facilities such as campgrounds, resorts, motels, hotels, trailer villages, contribute flows that are primarily domestic. The best method of determining flows from these facilities is by gaging existing flows or comparing these flows with flows from similar facilities. Sources such as schools, campgrounds, and resorts will have large seasonal and weekend variations in flow.

2.4.4 Industrial Component

The industrial component can vary greatly, depending on the type of industry, its size and supervision, and the control of various processes within the operation.

Industrial wastewater quantities are normally determined by gaging existing flows and comparing them with similar industries. In all cases the flow determination, whether from existing industry or new industry, should be accompanied by thorough investigations conducted with the industrial representatives. Some of the important questions to be asked are:

1. What quantities of water can be reused within the industry for process cooling, lawn irrigation, or other possible functions?
2. What control is required to prevent dumping of large quantities of wastewater?
3. What effect do waste constituents and their concentration have on the allowable flow rate to the sewer?
4. Which pollutants can be eliminated or reduced by changes in manufacturing processes or by in-plant treatment and recycling?

5. Will detention tanks, equalization tanks, or pretreatment reduce problems of wastewater discharges?
6. Can nonpolluted water sources such as air conditioning or industrial cooling water be separated from the wastewater system?
7. Is pretreatment of industrial wastes desirable—how much, type, etc.?

2.4.5 Stormwater and Groundwater Components

Stormwater and groundwater can enter a collection system from many sources and in quantities which can significantly affect a small treatment facility. The quantity of extraneous water can be greatly reduced by proper inspection, repair, and construction of a collection system.

Public Law 92-500, passed in 1972 to amend the Federal Water Pollution Control Act, requires that sewer systems be free of any excessive extraneous water. In addition, grants for treatment works made available through this act will not be approved without sufficient evidence that the sewer system discharging to the treatment works is not subjected to excessive infiltration. The law does authorize funds for the required studies of the systems.

The sources of extraneous water to be investigated in this study can be classified as infiltration and inflow. Infiltration is normally groundwater that enters a sewer through openings such as defective sewer pipe, inadequate pipe joint connections, and cracks in manhole walls. Groundwater infiltration will normally increase with rises in groundwater levels, porous subsoil conditions, defective material and poor workmanship. Poorly laid house connections, especially, can have a great effect on the amount of infiltration, and therefore the installation of such connections should be thoroughly checked for leakage. Additional information on infiltration and allowances for design can be found in references (24) and (20).

Stormwater inflow is considered to be water that enters a sewer system from sources such as roof or floor drains, footing drains, cooling water discharges, manhole covers, or connections with storm sewers. This water normally does not require as much treatment as would be available in a wastewater treatment works and should be eliminated from the sanitary system. A more detailed discussion can be found in the ASCE/WPCF Sewer Design Manual, MOP-9 (24).

2.4.6 Wastewater Flow Variations

Wastewater flow varies by day, week, and year with variations in water consumption, infiltration, and inflow. The amount of variation tends to increase with a decrease in sewer system size, because of the lack of damping effects from longer flow times found in larger systems. The ratio of peak flow to extreme minimum will vary from about 10 to 1 for systems serving populations of about 10,000, to greater than 20 to 1 for some small systems in which domestic wastewater is the major component of the total flow. This large variation is particularly true of flow from sources such as large regional schools or a complex of apartment buildings, where there may not be any flow during part of the night. The extreme low

flow usually occurs between 2 a.m. and 6 a.m., with two peaks occurring during the daylight hours around 9 a.m. and 6 p.m. The amplitude and time of peaks or depressions are directly related to the lifestyle of the population served. An example of daily household water use variation is shown in Figure 2-4 for several selected homes in Colorado, which are representative of families residing in suburban residential developments (25).

The daily variation caused by commercial or institutional sources are often more uniform and will tend to damp the household variations. Exceptions to this are hotels, motels, or similar establishments, which usually have variations coinciding with households.

The effect of industrial flow on daily variations will depend on the type of processes used and the waste discharges involved. In many instances, an industrial discharge can be controlled so that it can have an equalizing effect on total waste flow.

Weekly variations are most often caused by commercial, industrial, or recreational sources. Household waste flow is generally not varied throughout a week, with the exception of an activity such as washday. Waste flow from commercial or industrial sources tends to be uniform during daytime of the 5 working days, with heaviest discharges from recreational sources occurring during weekends. If both sources are located on the same system, one may tend to offset the other.

Yearly variations are most often caused by industries, recreational activities, or institutional sources. Some industries are seasonal and have discharges which change throughout the year. (For instance, food-processing industries operate at their peak when crops are being harvested.) Other variations in industrial waste can be caused by the changes in production required by demand. Recreational activities such as those in beach resorts, camps, or ski areas will cause changes in waste flow during the year. Significant changes in flow can occur where there are schools, such as regional schools or colleges in small towns where the students contribute a large part of the wastewater load on the treatment plant.

Infiltration and inflow will also cause important variations during wet seasons. Infiltration can affect variations in flow by raising or lowering the base flow level. Although infiltration is relatively steady, it can change during the year and even be absent for several months, depending on the location and quality of the system. During the wet season of the year when groundwater is high, infiltration can account for a large percentage of the flow.

Variations in wastewater flow depend greatly on the size of the collection system and population density (see Figure 2-5). If a large system has a low population density, the variations will be reduced because of higher infiltration, which also reduces the wastewater strength. If the density increases, the ratio of wastewater to infiltration will increase, causing larger variations and stronger wastewater. Short-term flow variations affected by distance and long-term variations affected by infiltration and population density must be considered.

A final and very important source of damping, either at the source of industrial discharges, at a pumping station, or at the treatment works, is flow equalization. The subject of flow equalization is covered in more detail in Chapter 4.

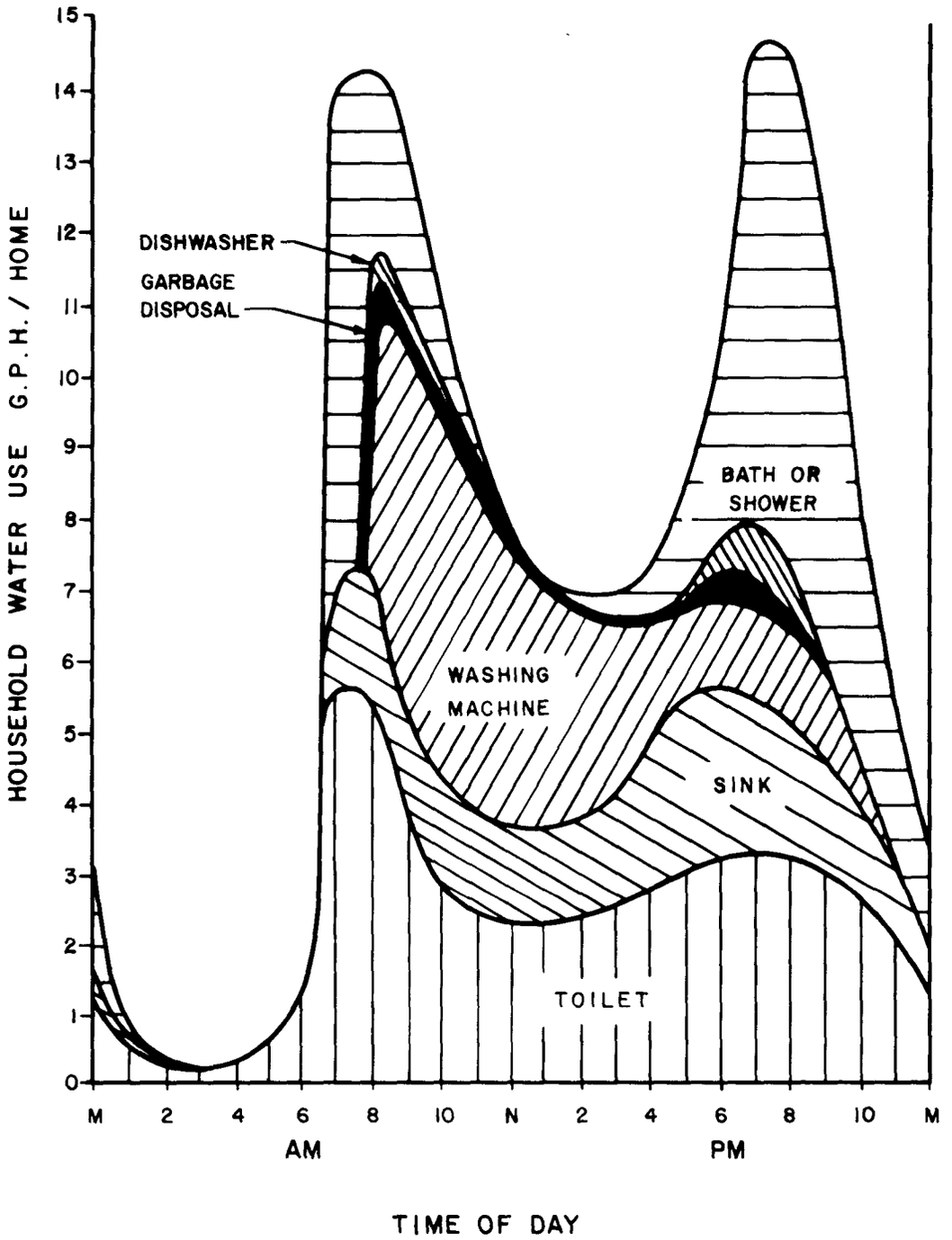

FIGURE 2-4

DAILY HOUSEHOLD WATER USE (25)

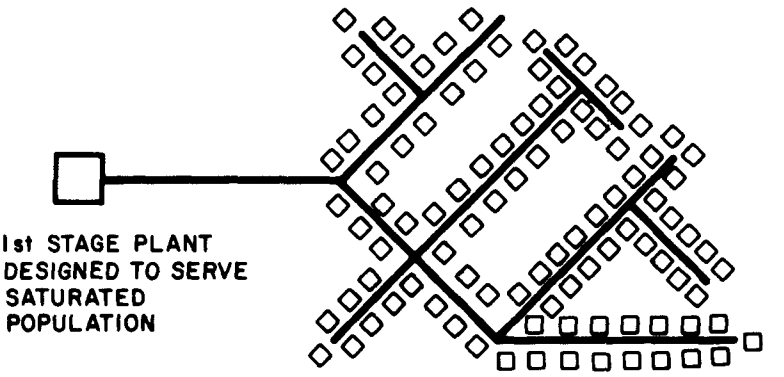

A. SMALL COLLECTION SYSTEM - HIGH POPULATION DENSITY

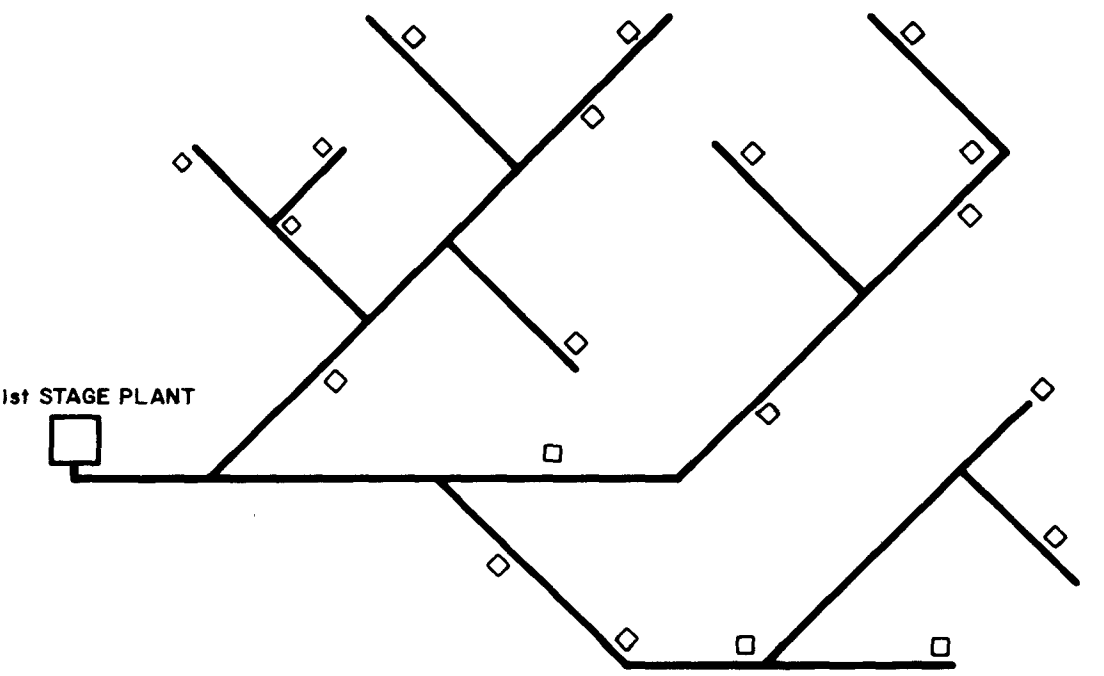

B. LARGE NEW COLLECTION SYSTEM - LOW POPULATION DENSITY

FIGURE 2-5

RELATION OF SMALL PLANT DESIGN TO COLLECTION SYSTEM

2.4.7 Design Flow Rates

In general, it has been found that smaller communities (fewer than 50,000 people) generate smaller wastewater flow per capita than larger communities. The smaller the community, the less the infiltration, ordinarily, and the larger the percentage of household wastewater in relation to commercial or industrial wastewater. Williamson (17), in Texas (1971), developed a characteristic wastewater flow curve (shown in Figure 2-1) in which the geometric standard deviation was from about 1.4 to 1.6.

In designing wastewater treatment works, there are five flows that should be considered in process selection, equipment sizing, and analysis of operation: peak, maximum 24-hour, average daily, minimum 24-hour, and extreme minimum. The processes selected should be able to operate efficiently over the entire range. (A more detailed discussion of how flow variation affects design and operation is given in the relevant process chapters.) Each of these flows should be determined for 1) the initial conditions of operation, 2) the future conditions at the end of the design period, and 3) if staged construction is used, the various periods of development.

The maximum and minimum flows can be found by two common methods. The first, using graphs that have been developed from existing flow records (available from a number of sources), compares the average flow with the other important rates. Figure 2-6 shows the ratio of extreme flows to average daily flow in New England based on dry weather maximums for domestic wastewaters. Other examples can be found in the ASCE/WPCF MOP-9 (24).

For flows from large buildings such as schools, apartments, hotels, or hospitals, the peak discharge may be estimated by the fixture-unit method. This method uses load factors for common plumbing fixtures, which are weighted values related to the flow rate for each type of fixture. These factors are expressed as fixture units, which can be defined as approximately 1 cfm of flow. Table 2-4, taken from the *National Plumbing Code* (26), lists fixture units per fixture or group. To determine the peak flow, the total number of fixture units within the system is found, using the load factors and number of each type of fixture. The total fixture unit value is then used on curves developed by R.F. Hunter (27) to determine probable peak flow. Figure 2-7 is based on Hunter's curves.

The Hunter method is usually conservative, because it makes minimum allowance for factors that cause damping. The average single-family house or apartment has about 12 fixture units and about 4 persons per family. The number of fixture units varies from one location to another; therefore, care should be taken using any one figure for different communities.

2.5 Wastewater Characteristics

Wastewater is used water containing suspended and dissolved substances from sources such as residences, commercial buildings, industrial plants, and institutions, along with groundwater and stormwater. Depending on amount, type, and form, these wastes will impart various characteristics to the flows. An understanding of these characteristics, which can be

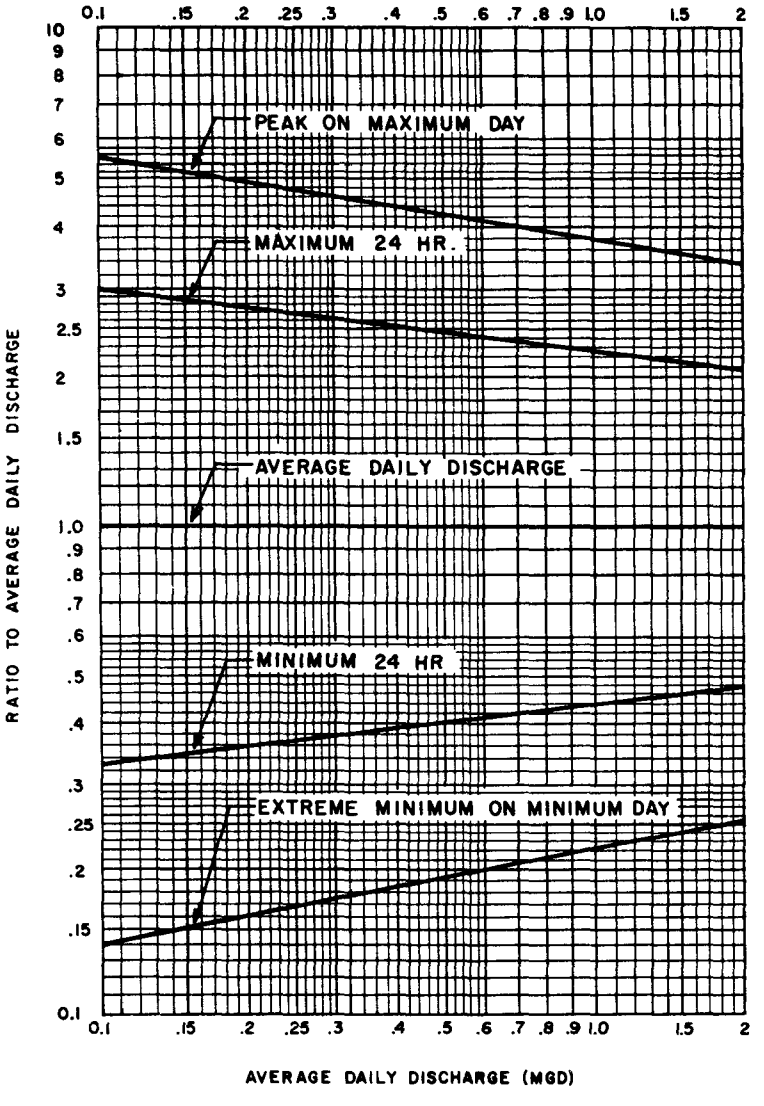

FIGURE 2-6

VARIATIONS IN DAILY WASTEWATER FLOW

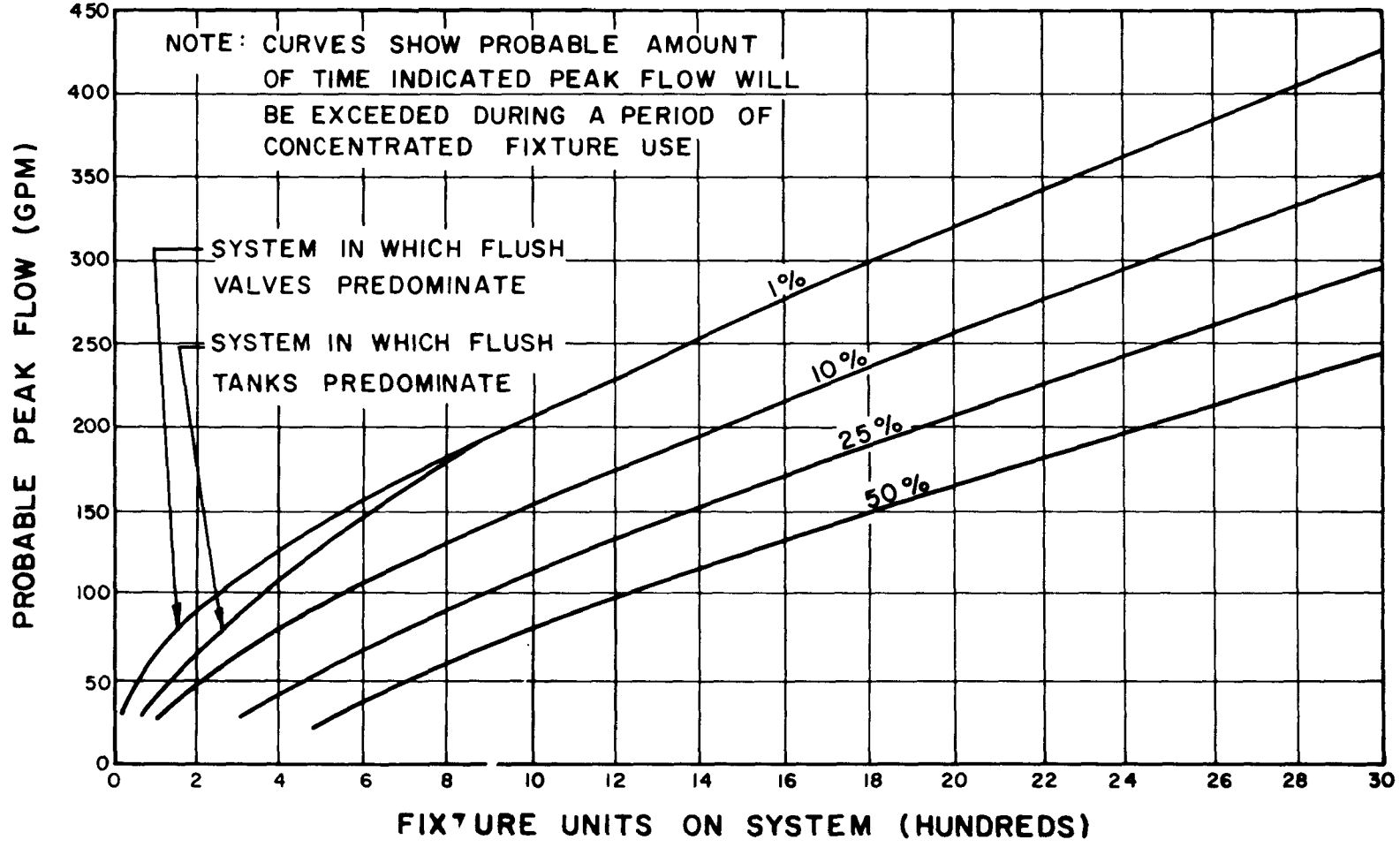

FIGURE 2-7

ESTIMATE CURVES FOR DESIGN PURPOSES
SHOWING RELATION OF DISCHARGE TO FIXTURE UNITS

TABLE 2-4

FIXTURE UNITS PER FIXTURE OR GROUP (26)

Fixture or Group	Fixture Unit Value as Load Factors
One Bathroom Group Consisting of Tank-Operated Water Closet, Lavatory, and Bathtub or Shower Stall	6
Bathtub[1] (With or Without Overhead Shower)	2
Bidet	3
Combination Sink-and-Tray	3
Combination Sink-and-Tray With Food-Disposal Unit	4
Dental Unit or Cuspidor	1
Dental Lavatory	1
Drinking Fountain	1/2
Dishwasher, Domestic	2
Floor Drains	1
Kitchen Sink, Domestic	2
Kitchen Sink, Domestic, With Food Waste Grinder	3
Lavatory	1
Lavatory	2
Lavatory, Barber, Beauty Parlor	2
Lavatory, Surgeon's	2
Laundry Tray (One or Two Compartments)	2
Shower Stall, Domestic	2
Showers (Group) Per Head	3
Sinks:	
Surgeon's	3
Flushing Rim (With Valve)	8
Service (Trap Standard)	3
Service (P Trap)	2
Pot Scullery, etc.	4
Urinal, Pedestal, Siphon Jet, Blowout	8
Urinal, Wall Lip	4
Urinal Stall, Washout	4
Urinal Trough (Each 2-ft Section)	2
Wash Sink (Circular or Multiple), Each Set of Faucets	2
Water Closet, Tank-Operated	4
Water Closet, Valve-Operated	8

[1] A shower head over a bathtub does not increase the fixture value.

Note: For a continuous or semicontinuous flow into a drainage system, such as from a pump, pump ejector, air-conditioning equipment, or similar device, two fixture units shall be allowed for each gpm of flow.

TABLE 2-5

WASTEWATER CHARACTERISTICS (22)

Physical	Chemical	Biological
Solids	Organics	Protista
Temperature	Proteins	Viruses
Color	Carbohydrates	Plants
Odor	Fats, Oils, and Grease	Animals
	Surfactants	Pathogens
	Phenols	
	Pesticides	
	Inorganics	
	pH	
	Chlorides	
	Alkalinity	
	Nitrogen	
	Phosphorus	
	Sulfur	
	Toxic Compounds	
	Heavy Metals	
	Gases	
	Oxygen	
	Hydrogen Sulfide	
	Methane	

divided into biological, chemical, and physical, is essential in the design and operation of a treatment works. A detailed breakdown of these characteristics is given in Table 2-5 (22) and Figure 2-8 (22). Descriptions of these characteristics and methods for their analysis can be found in *Standard Methods* (28), *Proposed Criteria for Water Quality* (29) (30), and elsewhere (31) (32) (33). In this chapter, only the general characteristics and their effects on small treatment plants will be discussed. The specific effects of wastewater characteristics on the processes are described in the relevant process chapters.

2.5.1 Physical Characteristics

The more important physical characteristics of wastewater include the various types of solids present and the temperature, color, and odor.

2.5.1.1 Solids

Total solids, including floating matter, can be divided into suspended (settleable and nonsettleable), colloidal, and dissolved solids. Each of these can then be divided into organic and mineral solids. Total solids can be defined as all matter that remains as residue upon evaporation at 105° C (or 180° C, to include metallic hydroxides if the pH is greater than 9).

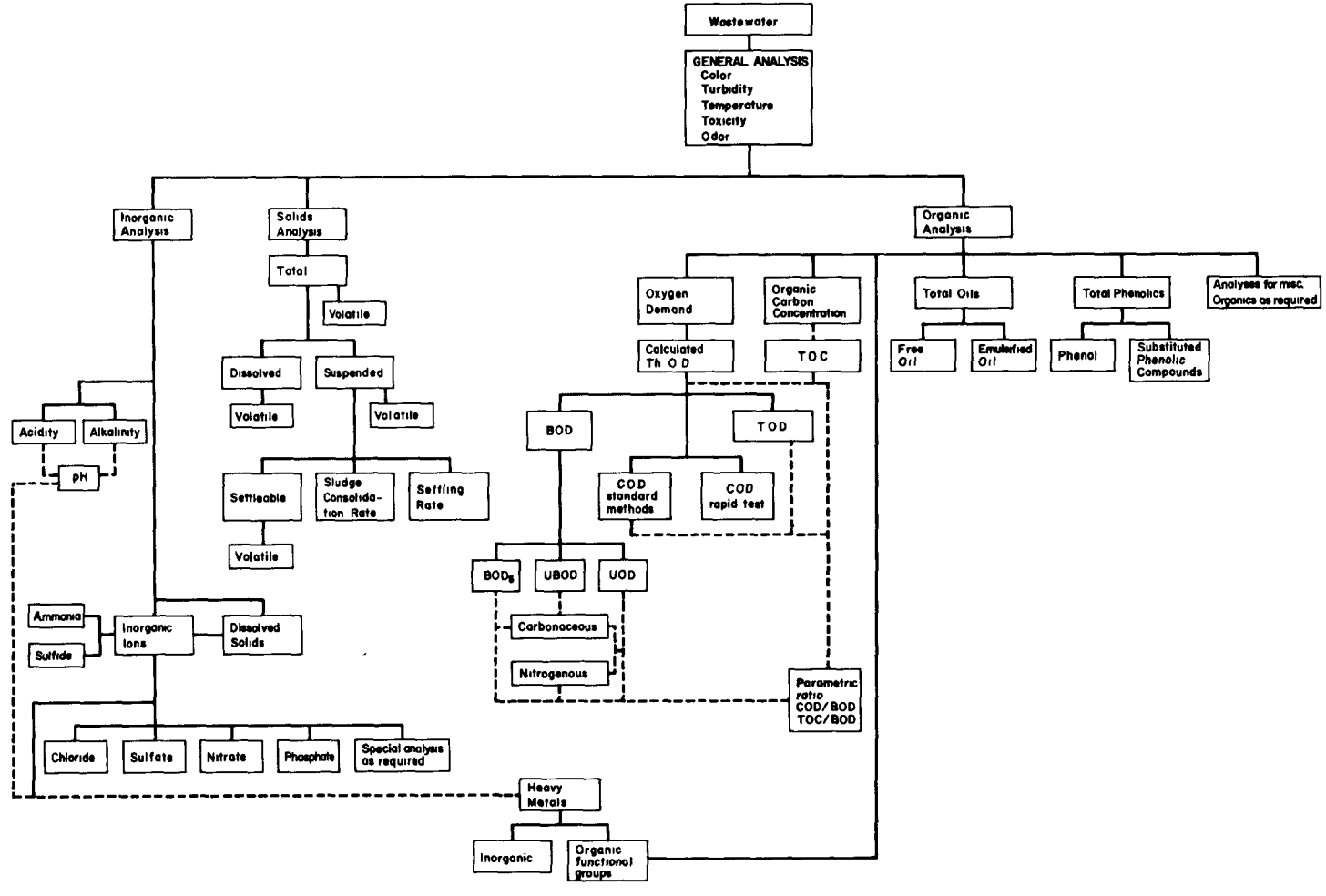

FIGURE 2-8

SCHEMATIC DIAGRAM OF WASTEWATER CHARACTERISTICS (22)

Solids can be classified by filtering a known volume of wastewater and determining the weight of suspended solids (SS) greater than about 0.5 to 1 micron (micrometer, μm) in diameter. Suspended solids can be divided using a cone-shaped container (Imhoff cone) to determine the solids that will settle in 60 minutes. A settleometer test, using a cylinder 6 in. (152 mm) high and 5 in. (127 mm) in diameter and measuring the rate of settling and consolidation, is coming into common use for operations.

Filterable solids consist of colloidal and dissolved solids. The colloidal solids consist of particles between about 1 millimicron (nanometer, nm) and about 0.5 to 1 μ. Bacteria, viruses, phages, and other cellular debris fall generally into the colloidal fraction. Dissolved solids consist of molecules or ions present in true solution in water. Although the average SS concentration of municipal wastewater generally ranges from 150 to 300 mg/l, this value may vary widely. The fraction dissolved may also vary widely, depending on the age and sources of the wastewaters. The longer the travel time in sewers, for example, the larger the fraction of dissolved solids because of microbial activity; the shorter the travel time the smaller the fraction of dissolved solids.

Nonfilterable solids, along with the nonsettleable portion of the SS, are not normally removed by plain sedimentation, and therefore require biological oxidation or chemical coagulation, with sedimentation for removal.

Each type of solids can be subdivided into organic (volatile) and inorganic (ash) fractions, based arbitrarily on volatility at 550° C. (At this temperature, the organic or volatile fraction is driven off as gas, and the inorganic, mineral, or fixed fraction will remain as ash.) The volatile solids content of sludge indicates the quantity of organic solids in an activated sludge system or the stability of sludge entering or leaving digesters. Settleable solids indicate the quantity of sludge that can be removed by plain sedimentation. If a wastewater contains few settleable solids, the selection of a process including primary sedimentation may not be justified. Similarly, if the settleable solids are largely organic and the following process is extended aeration, the primary clarifier may be omitted.

2.5.1.2 Temperature

Temperature of wastewater varies throughout the year and with location. During most of the year, the temperature of the wastewater is higher than the ambient temperature. Only during the hot summer months will the temperature be less than the ambient. The amount of hot water used in households or received from industries will keep the wastewater warmer than the ambient environment, and in the case of industrial discharges can raise the temperature above the normal range. Optimum temperatures for bacterial activity are from about 25° C to 35° C. Aerobic digestion and nitrification stops when the temperature rises to 50° C. When the temperature drops to about 15° C, methane-producing bacteria become quite inactive, and at about 5° C, the autotrophic nitrofying bacteria practically cease functioning. At 2° C, even the heterotrophic bacteria acting on carbonaceous material become essentially dormant.

Wastewater temperature is important because of its effects on aquatic life, chemical and biological reactions and reaction rates, and suitability for reuse. Changes in temperature because of effluent discharges can cause changes in the type of aquatic life. In many cases, warmer water will promote the growth of undesirable water plants and wastewater fungi.

Higher temperatures will tend to increase both biological and chemical reaction rates. Oxygen is less soluble in warm water, however, and this will decrease the amount of oxygen transfer. These factors make the design of efficient aeration or ventilation systems critical in biological treatment, to take full advantage of the increased biological activity if oxygen transfer is difficult.

In colder climates, freezing is an important consideration in selection and design of units. Trickling filters can develop ice formation, which may stop rotation of distribution arms. Spray from mechanical aerators can cause ice to form on the aerators and the platforms and can cause them to freeze solid if there is a power failure.

2.5.1.3 Color

Color of wastewater is normally used to describe the condition of waste within the treatment and disposal process. Fresh wastewater usually has a gray tint; as the organic material is broken down and the oxygen is depleted, the color changes to black. Black wastewater is normally anaerobic or septic. In some locations the color is changed by industrial waste discharges. Changes in color should warn an operator of possible process upsets or failures.

2.5.1.4 Odor

Odor in wastewater is associated with decomposing and putrescent organic matter. If industrial wastes are added, odor may be caused by chemical compounds such as ammonia, phenol, sulfide, and cyanide. Odor and color can indicate the condition of wastewater. Fresh wastewater has a distinct, musty odor, which is much less offensive than that of septic or anaerobic wastewater. More information on odor prevention and control is presented in section 2.6.

2.5.2 Chemical Characteristics

Chemically, wastewater can be described roughly by its organic solids, inorganic solids, and dissolved gas constituents, which are closely related and often interact. This interaction can be both beneficial and detrimental to treatment and disposal. An understanding of the various chemical characteristics and a complete analysis of the waste constituents are needed during design to reduce the detrimental effects and to take advantage of the benefits.

2.5.2.1 Organic Matter

Organic matter is present in settleable, nonsettleable, colloidal, and dissolved solids, and accounts for a large part of the pollutants. In average strength wastewater, the SS are about 75 percent organic matter and the filterable solids significantly lower. The settleable

organics can be removed by plain sedimentation. Other solids require biological flocculation, assimilation, or various forms of chemical or physical treatment.

Organic substances include proteins, carbohydrates, hexane solubles (fats, greases, oils, etc.), surfactants, phenols, and pesticides. Many of the substances are readily biodegradable; if discharged unaltered to a receiving water, they would cause a depletion of the available oxygen and could damage aquatic life and cause a change from aerobic to anaerobic conditions. Biological treatment units take advantage of this biodegradability: microorganisms growing under proper conditions (adequate oxygen, temperature, pH, etc.) oxidize the organics to a stable form that can be removed under controlled conditions.

Other organic substances, such as some detergents and chlorinated hydrocarbons, are not easily biodegradable, or are degradable but toxic to most microorganisms. These substances can usually be removed by physical-chemical treatment.

Basic tests to determine the organic content of wastewater are the biochemical oxygen demand (BOD), chemical oxygen demand (COD), and total organic carbon (TOC) tests. Other methods include determination of the volatile solids fraction of total solids; total, albuminoid, organic, and ammonia nitrogen; or oxygen consumed.

BOD can be defined as the approximate quantity of oxygen that will be used by microorganisms in the biochemical oxidation of organic matter. It indicates the strength of domestic and industrial waste in terms of the oxygen required if the flow were discharged into a natural watercourse. In treatment plant design, BOD is one of the parameters used for the selection and sizing of units. The bottle test for BOD is the one commonly referred to in the following discussion.

The major reasons for the wide use of the BOD bottle test are, first, the test does not require expensive equipment, and second, it has been the simplest test to measure the amount of organic matter that will be biologically degraded under relatively natural conditions.

The disadvantage of this test is that it is essentially a bioassay, which requires time and controlled conditions. The BOD test does not necessarily represent actual field conditions, because temperatures, concentrations, mixing levels, and seed bacteria in the bottle vary from actual conditions. The conditions required to allow aerobic living organisms to function uninhibited include proper temperature, sufficient oxygen, all needed nutrients for bacterial growth, and no toxic substances. The conditions in a diluted sample of strong wastewater held in a bottle for several days at a constant temperature may not be representative of actual conditions in the treatment process or stream.

There are several important measures of the oxygen demand of a wastewater: 5-day BOD (BOD_5), ultimate carbonaceous oxygen demand (UBOD), ultimate oxygen demand (UOD), and nitrogenous oxygen demand (NOD). In a 20° C BOD bottle test, the bacteria present break down organic material by metabolic reactions. Carbohydrates and sugars and then proteins are broken down to simpler compounds. The heterotrophic bacteria that oxidize carbonaceous material reproduce rapidly. After the nitrogenous material is broken down

and hydrolyzed to ammonia, the more slowly reproducing autotrophic (nitrifying) bacteria react. If they are only present in small numbers, little if any NOD will be satisfied until 6 to 10 days have passed. The BOD_5 test, then, usually represents only carbonaceous demand and averages about two-thirds of the UBOD. By the 25th to 30th day both the UBOD and the NOD are usually fairly well satisfied. The UBOD curve added to the NOD curve produces the UOD curve.

A sample taken from a trickling filter or activated sludge unit can contain a significant amount of nitrifying bacteria; this amount will cause early nitrification in the bottle and affect the test. If nitrifying bacteria are present in large quantities, they should be inhibited for more meaningful results of the BOD_5 test, or to obtain UBOD. For more detailed discussion see references (20), (28), and (32).

NOD can be determined by running two series of BOD tests on the same wastewater: one series with nitrifying bacteria inhibitor and one series without. Readings should be taken from the 3d day of incubation to the 30th, and the results plotted for each series. The difference in the final set of curves represents the NOD. This parameter can also be obtained by multiplying the ammonia-nitrogen (determined by the total Kjeldahl nitrogen test) by 4.6.

Chemical oxygen demand (COD) is a measure of the strength of domestic and industrial wastes in terms of the total amount of oxygen required to oxidize most organic matter to carbon dioxide and water. The major limitation of this test is the inability to distinguish between biologically oxidizable and biologically inert organic matter. In the absence of catalysts, COD results do not include biologically oxidizable acetic acid, aromatic hydrocarbons, and straight chain aliphatics, but do include nonbiodegradable cellulose. As a result, the COD of domestic wastewater is normally higher than the BOD_5. The BOD_5 and COD tests can be correlated for a particular waste as long as the ratio of biodegradable to nonbiodegradable organics does not change. This ratio can vary greatly between units in a treatment plant. The major advantages of the COD are that the test is less time consuming (3 hours rather than 5 days) and more reproducible. The test is also useful if the wastewater contains toxic substances, or for indicating the presence of toxic substances.

Total organic carbon (TOC) is another test that measures organic matter in wastewater. A small known quantity of sample is injected into a high temperature furnace. The organic matter is oxidized in the presence of a catalyst to carbon dioxide, and the carbon dioxide is measured with an infrared analyzer. The test requires relatively expensive equipment, but results are obtained very rapidly.

2.5.2.2 Inorganic Matter

The most important inorganic substances present in wastewater include acidic and basic compounds of nitrogen, phosphorus, chlorine, and sulfur; toxic compounds; and heavy metals. These components alone or by interaction with other wastewater components can affect the growth of organisms, cause corrosion, or produce odors. Inorganic dissolved solids can be measured in terms of specific conductance in micromhos (per cm^3), using a conduc-

tivity meter which correlated for that specific wastewater. This test is very temperature dependent.

The pH can affect both the treatment methods and metal equipment exposed to the wastewater. Biological, chemical, and physical treatment processes operate optimally in specific, but often different, ranges of pH. The natural alkalinity of wastewater in many cases will be a sufficient buffer to keep the pH within the normal, fairly neutral range for best biological activity. If the pH goes outside this range, biological treatment may not be feasible. A high or low pH waste could also cause corrosion problems.

Alkalinity is important in chemical treatment such as coagulation, chlorination, or ammonia removal by stripping (see Chapter 12).

Nitrogen, carbon, phosphorus, and certain trace elements are essential to the growth of plants and animals. In the design of biological treatment units, the nutrients available may limit the treatability of the waste. If an adequate amount of the essential nutrients is not available, it may be necessary to add these nutrients to the influent. For further discussion see Section 2.5.5.

Nitrogen is present in nature in five principal forms: organic nitrogen, ammonia, nitrite, nitrate, and gaseous elemental nitrogen. Organic nitrogen is normally contained in plant and animal protein. Ammonia is produced by decomposition of organic matter, chemical manufacture, or bacterial reduction from nitrites. Nitrates are formed by bacterial oxidation of ammonia to nitrites and then to nitrates. Gaseous nitrogen is produced under anaerobic conditions, if small amounts of carbon are present, by reduction of nitrates to nitrites and then to nitrogen gas. Nitrates are a necessary constituent of plant fertilizer and are changed to the organic form by plants. For a detailed discussion of the nitrogen cycle, see references (20) and (32).

Raw wastewater contains mostly organic and ammonia nitrogen (the fresher the wastewater, the more organic nitrogen). During aerobic biological treatment, the organic nitrogen is removed or converted to other forms. Depending on the time provided for treatment, any ammonia-nitrogen present may be oxidized to nitrite and nitrate by two specific forms of bacteria. If waste is discharged before nitrification occurs, the effluent will contain ammonia. Ammonia in the effluent can be detrimental for several reasons: first, it is toxic to some plant and animal life, and second, the oxidation to nitrate can occur in the receiving water and thus use up large quantities of the free oxygen. In addition, the presence of ammonia can hinder chlorination or seed germination. Nitrate in the effluent, although it is a secondary oxygen source, is also detrimental. Because of its nutrient value, it promotes excessive growth of algae or other organisms. In the case of reclaimed wastewater to be used for groundwater recharge, nitrate in drinking water can have serious and sometimes fatal effects on infants. The type of treatment required for nitrogen is therefore dependent on the method of ultimate disposal. For nitrogen removal, see Chapters 7, 9, 10, 12, and 13.

Phosphorus, as stated previously, is required for reproduction and synthesis of new cell tissue, and, therefore, its presence is necessary for biological treatment. Domestic wastewater

is relatively rich in phosphorus because of its high content in human waste and in synthetic detergents. There is usually adequate phosphorus in wastewater to allow biological treatment. Phosphorus, as a nutrient, can also cause excessive growth of algae in lakes or slow streams. For phosphorus removal, see Chapter 12.

Chlorides and many other elements, such as sodium, which are dissolved or dissociate in water, are not removed in ordinary waste treatment processes.

Sulfur can cause corrosion of piping (in its acid forms) and odors (hydrogen sulfide gas and other sulfur compounds). Sulfates are reduced by bacteria under anaerobic conditions to sulfides, including hydrogen sulfide (H_2S). H_2S can be oxidized biologically to sulfuric acid, which is highly corrosive.

Toxic compounds and heavy metals are also present in wastewater and can have a significant effect on treatment and disposal. Many of the heavy metals are necessary in trace quantities for growth of biological life but are toxic in larger concentrations. The presence and amount of these substances should be determined and treatment processes designed, if necessary, for their removal, particularly if downstream ecosystems are to be protected. Most toxic compounds and heavy metals are from industrial sources and can be eliminated by pretreatment. A list of some chemical substances presented in industrial waste is given in Subsection 2.5.4. For additional information on the toxicity of some components, see reference (33).

Gases sometimes found in raw wastewater that are important in the design of treatment works include nitrogen (N_2), carbon dioxide (CO_2), hydrogen sulfide (H_2S), ammonia (NH_3), methane (CH_4), and oxygen (O_2). Nitrogen and ammonia are important because of their roles in biological processes. Nitrogen gas released by anaerobic action from sludge will interfere with settling. Carbon dioxide is present in the atmosphere and is found in wastewater because of its solubility and its production by living organisms, providing a carbon source for some microbes. Hydrogen sulfide and methane are derived from the anaerobic decomposition of organic matter and are toxic to man. Hydrogen sulfide is a colorless, toxic, inflammable gas with an odor of rotten eggs. Methane is a colorless, odorless, toxic, combustible hydrocarbon that, if available in large quantities, can be used as fuel for generators.

Anaerobic digesters are sometimes designed to collect and store methane as an energy source at larger treatment plants.

Dissolved oxygen is essential for the continued respiration of aerobic organisms. Oxygen is only slightly soluble in water and may have to be added if biological units are to function properly (see Chapter 7). Oxygen solubility decreases with increased temperature and solids content. In designing aeration units, the oxygen supply should satisfy summer needs, and the detention time should be sufficient for slower winter activity.

2.5.3 Biological Characteristics

The designer of wastewater treatment works must have a basic knowledge of the principal organisms found in wastewater, surface water, and soil, and should understand the conditions associated with active organisms and the chemicals that may be present. Much of this information can be found in Chapter 10 and in references (20), (33), and (34).

The organisms present at the point of disposal (to surface water or groundwater) can be used to indicate the degree of pollution or the toxicity of treated wastewaters. The organisms in raw wastewater can be removed by treatment processes and with chemical additions under controlled conditions in a wastewater treatment plant.

Most wastewater contains large, well-mixed populations of microorganisms as well as the chemical components discussed previously. Under proper conditions, growing populations of these organisms can assimilate many chemical components into a removable form.

Biological treatment units such as activated sludge plants (Chapter 7), trickling filters (Chapter 9), and stabilization ponds (Chapter 10) provide these conditions. Organisms can also be used to convert organic solids (sludge) removed from wastewater to more stable and less objectionable forms. The conditions for sludge biological conversion are usually provided in aerobic or anaerobic digesters, or the sludge can be chemically stabilized (chapter 14).

The principal groups of organisms important in wastewater treatment can be classified as shown in Table 2-6. References (20), (33), (34), (35), and (36) contain more detailed information on these organisms, and their function in treatment processes is discussed in Chapters 7, 9, 10, and 14.

TABLE 2-6

ORGANISMS FOUND IN WASTEWATER TREATMENT

Moneran	Protistan	Plants	Animal
Bacteria	Fungi	Seed Plants	Vertebrates
Blue-Green Algae	Protozoa	Ferns	Invertebrates
	Algae	Mosses	
		Liverworts	

Viruses are also present in wastewater in large quantities and are of concern because many are pathogenic. In addition to viruses, there are many other organisms that are pathogenic. Depending on the type and degree of treatment, most can be removed. Some of the pathogens entering a treatment plant will die off naturally, given adequate time. Others may find hosts that can sustain them and pass them on to other life forms. Viruses and some protistan phyla that form spores or cysts can survive for long periods and may eventually reach a host. Because of the possibility of pathogens passing through a treatment plant, and because of the ways in which they may survive and cause disease, it is important to provide reliable disinfection facilities.

To determine the degree of removal (or disinfection) of pathogens in wastewater treatment plants, total coliform, fecal coliform, and fecal streptococci determinations (20) (28) (34) are used.

Coliform organisms are present in large numbers in the excretions of warm-blooded animals and are easily counted and more resistant to adverse conditions than most pathogens. Because of these facts, the presence of fecal coliform organisms is taken as a valuable indication of the presence of pathogens. Disinfection is discussed in detail in Chapter 15.

2.5.4 Wastewater Composition

Composition refers to the combined physical, chemical, and biological components found in wastewater. The components can vary in amount, type, and form, depending on the sources of the wastewater. In addition to the normal sources of constituents, the background components present in water supplies and their effect on the wastewater must be considered. Water supplies are relatively pure and may dilute the wastewater. There are, however, constituents such as chlorides, sulfates, and carbonates that are not removed by conventional water or wastewater treatment and that can build up to problem levels. This mineral buildup can result from minerals dissolved in groundwater, salt spray reaching water supplies in areas near the ocean, and mineral pickup during wastewater reuse cycling. It can also be the result of such treatment as nitrogen removal by breakpoint chlorination.

Wastewater composition will vary daily, weekly, and yearly for reasons similar to those for flow variation. Therefore, only major causes of composition variation will be discussed in this chapter. Domestic wastewater composition can vary greatly, depending on the lifestyle of the population. Table 2-7 lists normal ranges of the average composition of domestic wastewater. Garbage disposals require relatively small amounts of water but can greatly increase the strength of wastewater in terms of BOD, COD, SS, and grease.

Figure 2-9 shows the variations of COD for five sources of household waste. The area under the curves for each source indicates the amount of COD contributed daily. This profile is an example of variations for families residing in the suburban mountain residential developments of Colorado (25).

Commercial, recreational, and institutional wastewaters contain constituents similar to domestic waste, but vary in strength and quantity, depending on the source. Many equipment manufacturers have developed guides to determine strength of wastewater from various sources. Tables 2-2 and 2-3 are samples of these guides. The designer will have to use this information and any available data to determine the waste strengths to be expected. Local public health or environmental protection authorities should be consulted to check design criteria requirements for the specific location.

Industries can have a significant effect on wastewater constituents, depending on the size and type. Some chemical substances found in industrial wastes are shown in Table 2-8, along with some industries providing these substances. The best method of determining industrial waste constituents and strength is by survey.

TABLE 2-7

AVERAGE COMPOSITION OF DOMESTIC WASTEWATER, mg/l[1]

Composition	Range
Solids, Total	700-1,000
Dissolved, Total	400-700
Mineral	250-450
Organic	150-250
Suspended, Total	180-300
Mineral	40-70
Organic	140-230
Settleable, Total	150-180
Mineral	40-50
Organic	110-130
Biochemical Oxygen Demand 20° C	
5-Day Carbonaceous	160-280
Ultimate Carbonaceous	240-420
Ultimate Nitrogenous	80-140
Total Oxygen Demand (TOD)	400-500
Chemical Oxygen Demand (COD)	550-700
Total Organic Carbon (TOC)	200-250
Nitrogen (Total as N)	40-50
Organic	15-20
Free Ammonia	25-30
Nitrites	–
Nitrates	–
Phosphorus (Total as P)	10-15
Organic	3-4
Inorganic	7-11
Chlorides	50-60
Alkalinity (as $CaCO_3$)	100-125
Grease	90-110

[1] Assuming 100 gallons of wastewater per capita with a relatively soft potable water supply, no industrial wastewater, and median use of garbage grinders from a community whose citizens have a moderate income.

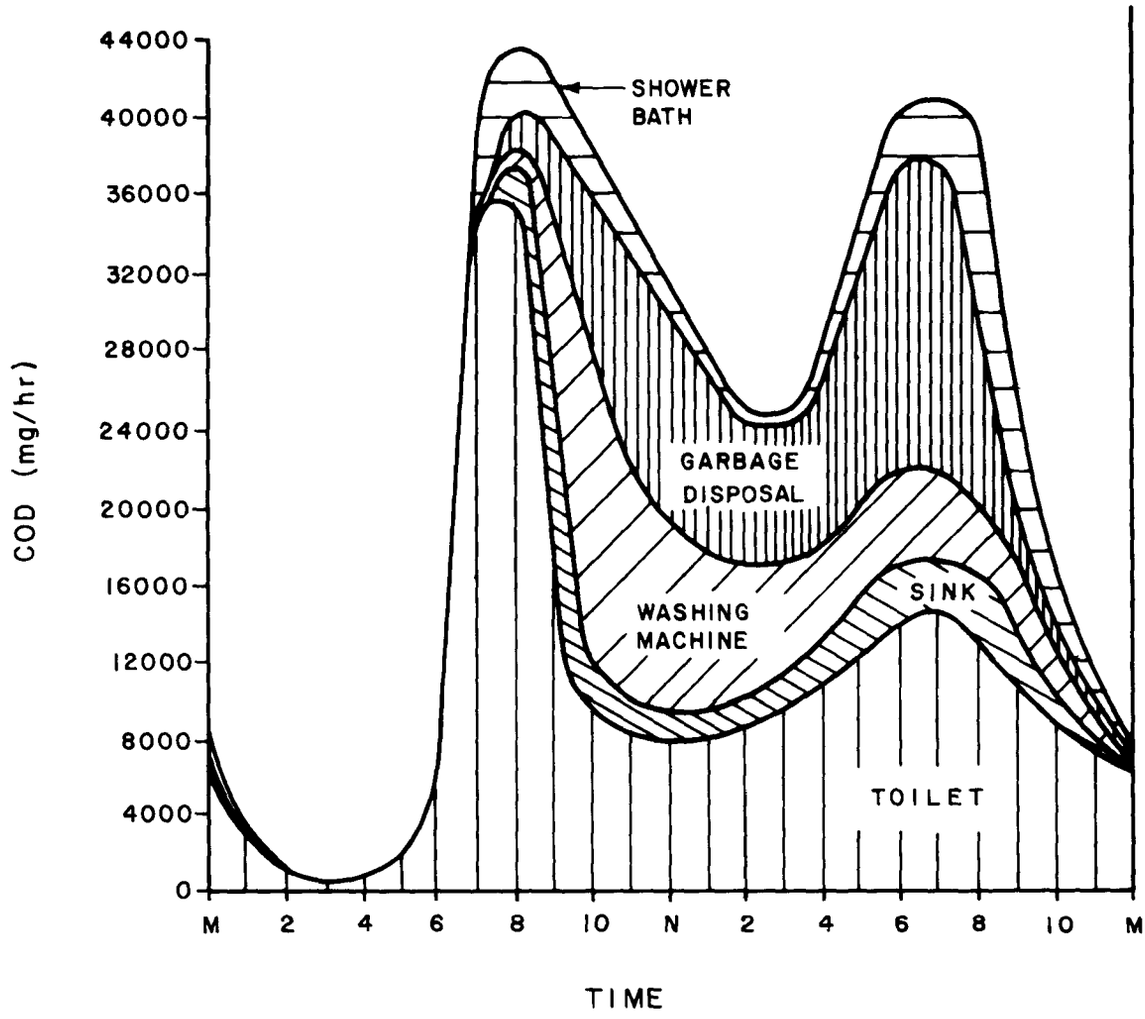

FIGURE 2-9

HOURLY COD PROFILE (25)

TABLE 2-8

SOME CHEMICAL SUBSTANCES IN INDUSTRIAL WASTES (33)

Chemical	Common Source
Acetic Acid	Pickle and Beetroot Manufacture, Acetate Rayon
Alkalies	Cotton and Straw Kiering, Wool Scouring, Cotton Mercerizing, Laundries
Ammonia	Gas and Coke Manufacture, Chemical Manufacture
Arsenic	Sheep Dipping, Fellmongering
Cadmium	Plating
Chromium	Plating, Aluminum Anodizing, Chrome Tanning
Citric Acid	Soft Drinks and Citrous Fruits
Copper	Copper Plating, Copper Pickling, Cuprammonium Rayon Manufacture
Cyanides	Gas Manufacture, Plating, Case-Hardening, Metal Cleaning
Fats, Oils, and Grease	Wool Scouring, Laundries, Textile Industries, Petroleum Refineries, Engineering Works
Fluorides	Scrubbing of Flue Gases, Glass Etching, Atomic Energy Plants, Fertilizer Plants, Metal Refineries, Ceramic Plants, Transistor Factories
Formaldehyde	Synthetic Resin Manufacture, Penicillin Manufacture
Free Chlorine	Laundries, Paper Mills, Textile Bleaching
Hydrocarbons	Petrochemical and Synthetic Rubber Factories
Hydrogen Peroxide	Peroxide Bleaching of Textiles, Rocket Motor Testing
Lead	Battery Manufacture, Lead Mines, Paint Manufacture
Mercaptans	Oil Refineries, Pulp Mills
Mineral Acids	Chemical Manufacture, Mines, Iron and Copper Pickling, DDT Manufacture, Brewing Textiles, Battery Manufacture, Photoengraving
Nickel	Plating
Nitro Compounds	Explosive Factories, Chemical Works
Organic Acids	Distilleries, Fermentation Plants
Phenols	Gas and Coke Manufacture, Synthetic Resin Manufacture, Textile Industries, Tanneries, Tar Distilleries, Chemical Plants, Dye Manufacture, Sheep Dipping
Silver	Plating, Photography
Starch	Food Processing, Textile Industries, Wallpaper Manufacture
Sugars	Dairies, Breweries, Preserve Manufacture, Glucose and Beet Sugar Factories, Chocolate and Sweet Industries, Wood Processing
Sulfides	Sulfide Dyeing of Textiles, Tanneries, Gas Manufacture, Viscose Rayon Manufacture
Sulfites	Wood Pulp Processing, Viscose Film Manufacture, Bleaching
Tannic Acid	Tanning, Sawmills
Tartaric Acid	Dyeing, Wine Making, Leather Manufacture, Chemical Works
Zinc	Galvanizing, Zinc Plating, Viscose-Rayon Manufacture, Rubber Processing

2.5.5 Biological Process Requirements

Biological treatment processes require nutrients for proper operation. Most of the nutrients required for biological activity are normally present in sufficient quantity in the influent. The nutrient concentration, however, must be determined if industrial wastes are present. The normal rule of thumb for determining N and P is that 5 lb of nitrogen and 1 lb of phosphorus are required for each 100 lb of BOD removed by microbiological activity. Without the proper nutrient balance, the efficiency of a unit will decrease, and the unit may become overloaded with fungi, which can flourish on lower levels of N and P.

Trace elements are also important in the design and selection of biological units. Although most wastewater will support biological growth, the type of organism is often controlled by the availability of these elements.

Numerous studies have found that 16 elements and 3 vitamins (growth factors) are needed for the growth of microorganisms. The elements include N, P, K, Ca, Mg, Na, S, Fe, Mn, Cu, Zn, Mo, B, Cl, Co, and V. If there is a deficiency of nutrients or trace elements, the organism population tends to change to filamentous forms with the ability to subsist on minimal nutrients. This deficiency may occur if the wastewater contains improper ratios of organic matter to needed nutrients to support a balance of growth of conventional organisms. The addition of the deficient elements has in many cases improved the degree of treatment obtained.

A deficiency can also be aggravated by precipitation of trace elements reacting with hydrogen sulfide. This could be true if the plant flow were to contain a large percentage of septage or if there were a buildup of anaerobic plume in a long collection system. At the pH values normally encountered in domestic wastewater, iron, zinc, copper, cobalt, and vanadium will be precipitated as sulfides. The presence of hydrogen sulfide also may cause inactivation of the vitamins present (37).

The optimum pH range for operation of a biological process is from 6 to 8. Fungi will begin to dominate below 6 and will take over almost completely at 4.5. As the pH rises above 9.5, a toxic effect occurs, and almost no microorganisms will survive at 11.0. Above and below the optimum range, the efficiency of operation will decrease. A rapidly occurring change in pH can have a toxic effect on the microorganisms.

The toxicity of elevated concentrations of heavy metals such as chrome, lead, copper, and mercury, as well as insecticides, cyanides, and high concentrations of phenols, can significantly affect efficiency. As with other biological systems, a trickling filter can become acclimated to many toxic materials if the concentration is low and does not vary greatly. A surge or shock load will upset a trickling filter, but the recovery is more rapid than with most other systems.

2.6 Odors and Other Airborne Pollutants

There are many areas and processes in wastewater facilities that can be potential sources of airborne pollutants if not prevented from being so by satisfactory design, construction, operation, and maintenance. Airborne pollutants include odors; noxious, toxic, or asphyxiating gases; particulates from sludge incinerators; and aerosols from trickling filters, aeration basins, cooling towers, stripping towers, and ventilation systems.

Even "fresh" wastewater and "digested" sludge have odors that may not be acceptable to the general public. Organic material containing sulfur or nitrogen may, in the absence of oxygen, be partially oxidized anaerobically and give off such odorous substances as hydrogen sulfide, mercaptans, skatoles, indoles, and amines. Any location (such as eddies) in which raw wastewater becomes anaerobic, or organic solids (such as sludge, slime, scum, or grit) are allowed to accumulate, may become a source of odor.

Odor prevention and control measures include:

1. Passing and enforcing strict sewer ordinances to limit entrance of potentially odorous substances.
2. Regular and careful cleaning, including frequent removal of slime, scum, and grit accumulations and regular inspection and maintenance of all plant structures.
3. Preventing anaerobic conditions, or removing odorous conditions, by adding chlorine, hydrogen peroxide, ozone, potassium permanganate, lime, or sodium hydroxide.
4. Maintaining adequate levels of dissolved oxygen by aerating; oxygenating; adding ozone, peroxide, or nitrate; or diluting with aerated wastewater.
5. Preventing sludge accumulating or aging by frequent solids withdrawals, adequate mixing in tanks, sufficient velocity of flow, or placing smooth transitions in structures to eliminate "dead" pockets.
6. Placing potentially odorous units such as vacuum filters, sludge thickeners, or sludge holding tanks in structures with forced ventilation; placing a dome over the odorous unit with forced ventilation, or placing a floating cover on the unit.
7. Preventing overloading by recirculating, equalizing flows, or providing overflow units.
8. Pretreating to remove odor-causing substances.
9. Preventing incinerator odors by maintaining temperatures throughout the burning area above 1,400° F (760° C).
10. Treating vented odorous gases by ozonating; bubbling through chlorine contact tank; wet scrubbing; combustion at temperatures above 1,400° F (760° C); catalytic oxidation; passing through activated sludge tank; activated carbon adsorption; treating wood chip adsorption; or filtering through a soil bed.

For more details on odor testing, odor intensity calculations, and solutions to odor problems, see references (2) and (38) through (54).

Aerosols are defined as suspensions of approximately microscopic (smaller than 5 to 10 microns) solid or liquid particles dispersed in the atmosphere. Particulates are considered to be liquid or solid particles of any size dispersed in the air. Aerosols and particulates may be organic, inorganic, or a combination of both. Foams, mists, dusts, smog, fumes, and smoke are among the different forms of aerosols and particulates. The liquid aerosols are generated at wastewater works when bubbles of air from wastewater or liquid sludge burst and discharge tiny droplets into the air. All aeration, ventilation, evaporation (cooling towers), spray irrigation, and stripping activities involving wastewater or sludge are potential sources of aerosols. Activated sludge, trickling filter, and aeration units (particularly those handling raw wastewater) are probably the major potential sources of pollutional aerosols. With the increasing demands for reuse of wastewater, however, cooling and stripping towers may also become a source of air pollution. Treated (but not disinfected) wastewater is sometimes used in these towers for evaporational cooling for stripping out volatile organics and inorganics. Pathogens and toxic or injurious organic and inorganic pollutants in the wastewater may be aerosolized.

Recently, aerosols have proven to be deserving of attention. Pathogens present in the aerosols must be considered a potential source of disease and infection, because samples downwind of wastewater treatment works have been found to include significant numbers of *E coli, A aerogenes,* and pathogenic enteric organisms. No evidence, however, has been found to indicate that aerosols affect the health of wastewater treatment facility workers or others.

Gases that can cause air pollution are emitted from treatment works in wastewater, sludge, and liquid sidestream processing; wastewater collection, pumping, and transmission; and disposal operation. Explosive, toxic, asphyxiating, and flammable gases are also hazards. These are discussed in the U.S. EPA technical report and technical bulletins of safety (55) (56) (57).

Controls for particulates and gases from incinerators are well established. EPA has developed criteria and standards for permissible levels of pollutants in stack emissions. These standards establish limits on particulate discharge and opacity.

Explosive, toxic, noxious, lachrymose, or asphyxiating gases found at wastewater works include chlorine, methane, ammonia, hydrogen sulfide, carbon monoxide, and oxides of nitrogen, sulfur, and phosphorus. If there is a possibility that such a gas can escape from the works or into work areas, in dangerous or nuisance concentrations, the knowledge might affect the operation of the works and the use and development of adjacent land. Therefore, it is of the utmost importance that all precautions be taken to insure against the escape of such gases. They are usually more detrimental within wastewater structures than in adjacent areas.

Of the gases (including those above) collected from wastewater works structures by ventilation systems, some could be unsafe or could adversely affect the environment if discharged directly to the atmosphere. Consideration should be given to monitoring such ventilation discharges for objectionable gases. Consideration should also be given to providing standby

means for neutralizing, stabilizing, or destroying gases that might significantly affect the environment.

Additional design, operation, and maintenance criteria for control of aerosols, particulates, and gases at wastewater works are presented in WPCF Manual No. 1, "Safety in Wastewater Works" (58). Safety factors and controls are presented in references (55), (56), and (57).

2.7 Noise

Wastewater facilities can be an unacceptable irritant to nearby inhabitants if they are designed, constructed, operated, or maintained in such a manner that they produce excessive noise. Noise prevention and control measures, noise level standards, noise analysis, and examples of calculation on noise transmission at wastewater treatment works are discussed in references (2) and (97).

Evaluation of noise levels in a community is a complex problem involving individual perception of how an objectionably noisy environment is defined. Definitions of these perceptions is difficult and involves measurements of ambient noise levels in the area.

Maximum noise levels for working areas are defined by regulations authorized under the Federal 1970 Occupational Safety and Health Act (OSHA) and by its predecessor, the Walsh-Healey Act (59) (60). Acceptable levels for adequate speech communication in the working environment are available (61). Community noise levels have also been researched, and information exists on desirable levels (62) (63) (64).

Noise control needs are determined by comparing noise source measurements (sound pressure level, source direction, sound direction, sound power, etc.) with a specified design goal or criterion for acceptable noise levels at a listener's position. Sound pressure is sensed by a microphone and amplified in a sound level meter for frequency analysis or display on a decibel meter (65).

Sound power levels (L_w) should not be confused with sound pressure levels (L_p), which are also expressed in decibels. Sound power level is related logarithmically to the total acoustic power radiated by a source. Sound pressure level specifies the acoustic "disturbance" produced at a point. Sound pressure level depends on the distance from the source, losses in the intervening air, room effects (if indoors), etc. Sound power level is analogous to the heat production of a furnace, while sound pressure level is analogous to the temperature produced at a given point in a building. In another example using light bulbs, the wattage is analogous to L_w and the brightness analogous to L_p. The noise of a piece of equipment may be expressed by the phrase "the sound power level is 60 dBA" or "the sound pressure level is 60 dBA at 3 ft (0.9 m)." An increase of 3 decibels indicates a doubling of sound power, whereas an increase of approximately 10 decibels indicates a doubling of perceived sound pressure. Typical sound pressure decibels are logarithmic units for measuring the relative levels of various acoustical quantities (66) on a scale beginning with 0, for faintest audible sound, through 130, which is the approximate threshold for pain. Average sound pressure levels encountered are shown in Table 2-9.

TABLE 2-9

AVERAGE SINGLE NUMBER SOUND PRESSURE LEVELS (2)

Interior Noises	dBA
Bedroom At Night	30-40
Quiet Residence	39-48
Residence With Radio	47-59
Small Office or Store	47-59
Large Store	51-63
Large Office	57-68
Electric Typewriter At 10 ft	62-67
Factory Office	60-73
Automobiles	64-78
Factories	65-93
School Cafeterias	76-85
Railroad Cars	77-88
Garbage Disposals	78-83
Airplane Cabins	88-98
Noises At 3 Ft From Source	
Whispering	30-35
Quiet Ventilating Outlet	41-47
Quiet Talking	59-66
Noisy Ventilating Outlet	60-75
Business Machines	71-86
Lathes	73-83
Shouting	74-80
Power Saws	93-101
Power Mower	94-102
Farm Tractors	94-103
Power Wood Planers	97-108
Pneumatic Riveter	100-120
Outside Noises	
Leaves Rustling	10-15
Bird Calls	40-45
Quiet Residential Street	40-52
150 to 200 ft From Dense Traffic	55-70
Edge of Highway With Dense Traffic	70-85
Car At 65 mph At 25 ft	75-80
Propeller Plane At 1,000 ft	75-84
Pneumatic Drill At 50 ft	80-85
Noisy Street	84-94
Under Elevated Train	88-97
Jet Plane At 1,000 ft	100-105
Jet Takeoff At 200 ft	120-125
50-hp Siren At 100 ft	130-135

Usually, noise can be most efficiently controlled at the source. A designer can control machinery noise by specifying the least noisy equipment consistent with performance. To meet acceptable acoustical levels, the designer should 1) specify allowable sound power levels (or sound pressure levels at a specified distance) for the equipment; 2) submit laboratory or field measurements for approval; and 3) perform field conformance tests.

Designers of wastewater treatment works should consider including noise control measures (such as source control of machinery noise, special architectural treatment to absorb sound and to isolate noisy equipment, buffer zones within the plant between noisy and quiet areas, and site planning and buffer zones) to minimize impact on community noise levels. These measures should take into account both interior noise and community noise criteria discussed above.

The following techniques, singly or in combination (67) (68), may be used to reduce machinery noise:

1. Segregating noisiest elements in groups.
2. Vibration damping (using materials like lead sheet in foundation).
3. Isolating vibration (mounting on springs).
4. Sound absorbing enclosures (with hard outer shell and sound absorbent liner).
5. Sound attenuating at exhaust or intakes of fans or compressors.
6. Providing full personnel enclosure observation booths in auditory damage risk areas.
7. Providing partial protective booths (open in rear).
8. Plenum treatments (devices admitting low-velocity air, to prevent escape of excessive noise).
9. Pipe lagging (lining or covering that absorbs radiated noise).
10. Providing partial barriers.
11. Lining ducts.
12. Using silencers, mufflers, or mutes (attenuating noise from high velocity flow of gases by multiple reaction of sound waves from acoustically absorbent surfaces; eliminating turbulent flow; and reducing flow velocity).
13. Providing ear plugs and muffs.
14. Reducing motor speed (to lowest practical requirements in combination with size and pressure to produce required power).
15. Selecting valves not normally noisy (pilot-operated or compound valves rather than direct-acting or single stage).
16. Keeping air out of hydraulic systems.
17. Preventing development of cavitation in pumps (by keeping suction line velocities to less than 5 ft/s (1.5 m/s, keeping inlet lines short and with a minimum of bends and joints, etc.).
18. Reducing turbulent flow next to flat metal plates.
19. Using rubberlike flexible connections in drive shafts.
20. Reducing gear noise by maintaining equipment, controlling alignment, and using enclosures.

The following techniques may be used to reduce construction and operation noise:

1. Replacing individual operation and construction techniques by less noisy ones; for example, using welding instead of riveting, mixing concrete offsite instead of onsite, and employing prefabricated structures instead of building them onsite.
2. Selecting the quietest alternative items of equipment; for example, electric instead of diesel-powered equipment, hydraulic tools instead of pneumatic-impact tools.
3. Scheduling equipment operations to keep average noise levels low; for example, scheduling the noisiest operation to coincide with times of highest ambient levels, keeping noise levels relatively uniform in time, turning off idling equipment, and restricting working hours.
4. Increasing the number of machines at work at any one time (this will reduce the duration of noise exposure, although it will increase the noise level during that particular time of operation).
5. Making use of speed limits to control noise from vehicles.
6. Keeping noisy equipment operations as far as possible from site boundaries.
7. Providing enclosures for stationary items of equipment and barriers around particularly noisy areas on the site or around the site itself.
8. Locating haul roads behind natural earth berms or embankments.
9. Maintaining noise control devices.
10. Replacing mufflers before breakdown.
11. Replacing warped, bent, or damaged engine enclosures and ineffective insulation.

Noise control measures will be effective only as long as control devices are properly maintained.

The recently adopted Federal construction guide on noise control is a good source for general contract specifications for any new wastewater facility or for extensive alterations to existing facilities (69).

Further information and details on noise and its control can be found in references (2), (70), and (71).

2.8 Trucked and Marine Industry Wastes

Many small wastewater treatment plants will be located in rural areas or near small harbors or ports. At these locations the plants may be required to treat waste from isolated sources (which may be trucked to the plant) or waste from vessels (which may be conveyed to the plant by several methods). In many cases the ratio of these wastes to be treated to the normal load on the plant will be high, and therefore the design must take this factor into consideration.

2.8.1 Trucked Wastes

Trucked wastes can include septic tank sludge and chemical toilet wastewater as well as almost any chemical that is discharged by an industry or a marine vessel. Extreme caution

should be taken to prevent upset of a plant treating trucked wastes, to avoid shock loading of a treatment process.

Trucked human wastes can be classified as septic tank sludge (septage), privy vault wastes, and recirculating and chemical toilet wastes. The solids content, organic strength, and toxic chemical concentration of these wastes are the most important factors in developing dilution criteria for their acceptance at the treatment works. The type of treatment available will dictate the dilution required. If the facility consists of a biological process with no primary clarification, the biological process must be designed to handle the additional load or separate treatment must be provided.

The increase of solids from synthesis of soluble organic matter in trucked wastes can upset the equilibrium of a biological process. A practical limit (without pretreatment for the allowable increase in solids) is up to 10 to 15 percent of the concentration of the mixed liquid solids, to prevent a substantial upset in a biological system (72).

The high oxygen requirements for stabilization of these wastes may overtax the plant's oxygenation capacity, if sufficient dilution is not provided or if the aeration facilities are not adequately sized to take trucked wastes.

The addition of chemical toilet wastes to biological treatment processes should be avoided, if possible, because of the accumulation of toxic chemicals. Processes other than biological should be used. The chemicals used in these toilets vary but primarily consist of zinc or formaldehyde compounds. Therefore, periodic checks should be made to prevent these toxic chemicals from retarding or completely stopping the biological process.

Some of the primary requirements of a transfer station for handling trucked waste and controlling flow to the facility include:

1. Adequate storage capacity to equalize flows.
2. Ease of truck unloading without spillage.
3. Comminution and screening.
4. Odor control.
5. Pumping flexibility and reliability.
6. Possibly aeration, or mixing to provide oxygen or to keep solids in suspension.

Additional information on the characteristics of trucked wastes and the design of facilities to handle them may be found in Chapter 14 and in references (72) and (73).

2.8.2 Marine Industry Wastes

Marine industry wastes would include waste from vessels and dock facilities. The waste from vessels in some ways is similar to trucked wastes. Vessel wastewater would include domestic waste bilge water and nonoily ballast water. Domestic wastewater could include water from toilet, galley, sink, shower, and laundry. Many ships are equipped with holding tanks, recirculating toilets, evaporating systems, or incineration devices, which can alter the quantity and character of the wastewater.

The disposal of wastewater from vessels requires considering both collection and treatment. To collect vessel wastewater, a central pump-out facility in the harbor or a sewer system at active docks, or mobile collection by truck, barge, or railroad car may be provided. The necessary treatment may be located at a municipal treatment plant or in a harbor-based vessel treatment system. Factors to be considered in designing facilities to treat vessel wastewater include:

1. Storage for large seasonal and daily variations.
2. Potential agricultural pest infestation from foreign wastes.
3. Access to dock facilities.
4. Remoteness of municipal services.
5. Large volumes of bilge and ballast water.
6. Time constraints on disposal.
7. Excessive waste handling under current practice.

Bilge water is water collected in the lowest part of the ship, resulting from leaks or spills. It may be contaminated with oil, solvents, rust, scale, and many other materials. Treatment of bilge water would involve oil separation and disposal operations such as skimming, chemical treatment, flotation, adsorption, and incineration. Other processes may also be required to eliminate physical or chemical contaminants that may be present. Treatment may be possible in a municipal system with proper pretreatment, or an independent treatment system may be required.

Ballast water is commonly used to compensate for underloading of vessels. This ballast may be taken from polluted harbors and eventually discharged in cleaner harbors. Ballast water can have many of the physical, chemical, and biological characteristics of bilge water and must be handled with similar caution.

Currently, there is not much information available on the characteristics of marine industry wastes other than sanitary wastes. There are many studies underway that will provide more data on vessel wastewater treatment systems and the characteristics of vessel wastewater. For more detailed discussion of the information presented in this subsection, see references (74) and (75).

2.9 Effluent Disposal

Pollutants can be removed from wastewater to any degree desired, depending on the treatment processes used. The goal of sound engineering in wastewater treatment is to provide a degree of treatment consistent with the requirements for disposal or reuse at a minimum cost. The disposal may be by dilution in lakes, rivers, estuaries, or oceans or discharge on land by agricultural use, recreational use, groundwater recharge, or evaporation. Reuse overlaps the disposal methods by including irrigation, groundwater recharge, and impoundment for recreation. In addition, reuse includes use as industrial water (which, along with agricultural use, has great potential in the United States) and municipal use (which now occurs indirectly, but may occur directly in the future).

Water pollution control, by setting receiving water or stream quality standards, led to removing a minimum of the pollutants and letting nature complete the job by self-purification. The amount of self-purification or assimilative capacity depends on many factors, including volume of flow, available oxygen, and capacity for reoxygenation. Problems of overtaxing the assimilative capacity of the receiving waters and the unfair use of this capacity by upstream users have prompted development of the "effluent standards" for wastewater disposal, now part of Federal law. States and regions still enforce stream standards which are more stringent than Federal effluent standards in some locations.

The following is a brief discussion of effluent disposal alternatives. More detailed discussions of standards, water quality criteria, and effluent disposal conditions are contained in references (20), (76), (77), (78), and (79).

2.9.1 Disposal to Surface Waters

Wastewater disposal to surface water is the most common method used to date. This method includes disposal to streams, lakes, estuaries, and oceans. After water quality standards (based on use and permissible thresholds of pollutants and on best use of the receiving water) have been determined, the treatment requirement for a specific discharge can be determined.

2.9.1.1 Rivers or Flowing Streams

During wet seasons, a river's flow and velocity increases and carries soil and organic material stripped from the surface of the earth and the river bed. When precipitation stops, the river loses carrying capacity and drops some of this material into pools and ponds along its route. With each cycle the ecological equilibrium is upset as water flow increases or decreases, and solids are scoured up and deposited.

The oxygen resource of a stream is another factor that is important in the assimilative capacity of a stream. Oxygen in a river can be obtained from its tributaries, surface drainage, groundwater inflow, reaeration from the atmosphere, and photosynthesis of aquatic plants and algae. For a detailed discussion of these factors, see references (20), (33), and (78).

Human activities will have varying effects on a stream. The most important factors in wastewater discharges include excessive organic loading, suspended matter, nutrients, and the various ions or compounds that change the quality of the water.

Organic loading is a most significant factor in wastewater disposal to a stream, because of the limited assimilative capacity of any stream. Depending on the flow and the oxygen resources in the stream, the addition of organic matter to a stream can have effects ranging from no noticeable effect to septic conditions with noxious odors, floating sludge, and die-off of all higher life forms. The majority of the organic matter is associated with the SS of a treatment plant effluent.

Nutrients added to a stream may increase the aquatic life in the stream, which in turn could cause an oxygen demand when the additional organisms die. In addition to the reduction of dissolved oxygen in the stream, the increased aquatic life can produce taste and odor not associated with septic conditions.

Suspended matter in a treated wastewater discharge is normally present in small quantities yet can significantly affect a river. An excess of fine material can hasten the filling of the riverbed and damage much of the littoral environment in which fish spawn and their food chain flourishes.

Various ions and compounds in the effluent may have different effects on different streams, depending on the stream's characteristics. Toxic compounds can reduce aquatic life. Other ions and material may be precipitated in a stream or adsorbed on particles that settle to the stream bed. Many ions and compounds will be degraded or converted to other forms that will be harmless to the environment. Some materials such as DDT, lead, or mercury can be concentrated in the stream food chain and may eventually harm many higher life forms, including humans.

In determining the effluent limitations for disposal to a river, all of the factors mentioned previously must be considered. After the water quality criteria have been determined, the available dilution and DO can be used to determine effluent requirements. These requirements can then be compared with the appropriate effluent standards. Each discharge will have to be considered for its specific limitations. The most critical time for most river disposal will usually be when the flow is at a minimum, reducing dilution, and when water temperature is high, reducing oxygen transfer.

2.9.1.2 Lakes or Stored Water

Wastewater discharged into lakes will normally reduce the concentration of pollutants, depending on the size of lake and characteristics such as stratification and vertical mixing. Wave action, mixing, precipitation, aquatic plants, and inflow can provide reoxygenation and increase the DO. The bacterial content of stored water can decrease because of lack of proper food, sedimentation, disinfection by sunlight, and depredation by other organisms.

More important than the effect of lakes or reservoirs on waste is the effect of wastewater on the lake or reservoir. Lakes, depending on size and amount of inflow and outflow, can be seriously affected by many wastewater components. In areas where evaporation is significant, the concentration of salts and total solids in a lake can be increased by evaporation. The most serious effects of wastewater are 1) reducing DO resulting from the BOD of the waste, 2) nutrients affecting eutrophication, and 3) concentrating pollutants in the food chain.

Wastewater disposal to a lake will depend on size and depth of the individual lake. Small shallow lakes will normally be considered completely mixed and the total volume available for dilution. Lakes, ponds, and reservoirs having depths greater than 10 to 15 ft (3.28 to 4.92 m) will be subjected to season-related cycles of stratification and vertical mixing.

Stratification results from increased water density with depth, resulting from decreasing temperature. The stratification of a lake can be divided into three zones. The top is a zone of circulation known as the epilimnion. This zone is subject to mixing because of wind action or diurnal factors, caused by the sinking of a thin layer of surface water that is cooled at night. Within this layer, the dissolved oxygen, light, and carbon dioxide are plentiful for aquatic life. The middle zone is the thermocline, which is characterized by a rapid decline in temperature and dissolved oxygen. This zone is extremely resistant to mixing and is often the location of the highest quality water in the lake. The bottom zone is the zone of stagnation or hypolimnion. Within this zone, dead organic matter is deposited by sedimentation, and the water is devoid of oxygen and at a relatively low temperature.

Vertical mixing of deep lakes usually will occur once or twice a year, at least when the temperature of the lake becomes uniform at approximately 39° F (4° C), the temperature at which water density approaches a maximum. When this condition occurs (normally in spring and fall), the lake water becomes unstable, and wind disturbance can cause vertical circulation in the entire lake. During this upset period, which lasts a few weeks, the lake may become completely mixed.

Eutrophication is a term used to describe the process of maturation of a lake from a nutrient-poor (oligotrophic) to a nutrient-rich (eutrophic) body of water. Most lakes in their early stages of development were nutrient poor, with a small amount of nutrients derived from weathered soil or degradable organic matter. As a lake matures, the concentration of nutrients will build up, depending primarily on inflow and outflow conditions.

Human activities have caused artificial enrichment to occur, changing the condition of many lakes in the United States from nutrient-poor to nutrient-rich. This change has occurred over a very short period of time and in most cases has been caused by the discharge of wastewater into lakes and other stored water, along with the runoff from agricultural land, farmland, and other areas where commercial fertilizers may have been used.

Because of the sensitivity of lakes to nutrient addition, it is very important to consider very carefully the discharge of nutrient-containing wastewater. The effects of eutrophication can be severe, and its development should be retarded as much as possible. Once eutrophication has set in, it is very difficult and in most cases impractical to overcome. A more detailed discussion on eutrophication can be found in reference (78).

The concentration of toxic pollutants in the lake food chain is another serious problem, with the occurrence of waste disposal to lakes and other locations where fish and shellfish live.

Lead, mercury, DDT, and several other substances that can be found in wastewater have been shown to become concentrated in the food chain. These pollutants, which may not be harmful in low concentrations, can be concentrated to such an extent that they seriously affect higher life forms.

2.9.1.3 Tidal Estuaries and Oceans

In tidal estuaries, dilution is complicated by tidal action, which can carry portions of the waste back and forth in the same region for many cycles. This is caused by differences in density of fresh water, wastewater, and sea water; wind action and density currents that work against vertical mixing; coagulating and flocculating effects of saline water; and shore and bottom configurations. Reference (20) discusses the dilution of wastewater in estuaries and oceans.

Dilution, dispersion, and movement of wastewater discharged into the ocean or into large lakes offer special design problems. The initial dilution is normally provided by the design of diffusers to cause mixing by jet action and density differences. Dispersion by diffusion cannot be controlled by engineering design, but selection of an ocean outfall location, where normal currents will assist in dispersion, is important.

2.9.2 Land Application of Wastewater

Land application of wastewater has been practiced worldwide for over 135 years. In Melbourne, Australia, approximately 14,000 acres (57 km^2) of pasture have been irrigated with wastewater for over 80 years. In 1850, in Berlin, Germany, a wastewater farm was started, in which 21,000 acres (85 km^2) were irrigated by 1905. Since 1935, 57,000 acres (231 km^2) of pasture and vegetables have been irrigated in Leipzig, Germany. A great deal of information on this practice in North America is contained in references (80), (81), (82), and (83).

The most common reasons for use of land application would be to provide supplemental irrigation water to augment groundwater supplies, distance and cost limitations of transport to other suitable disposal locations, and cost advantages over other forms of treatment. Land application uses include 1) irrigating crops (such as grasses, alfalfa, corn, sorghum, citrus trees, grapes, and cotton), and 2) irrigating areas for recreational purposes (such as parks, golf courses, sports grounds, ornamental fountains, and artificial lakes). Municipal uses include landscaping streets, highway media strips, and school grounds. In addition, irrigation of cemeteries, college grounds, airports, green belts, and forest preserves can be provided. Augmenting of groundwater supplies by recharging aquifers with treated wastewater is being done to prevent salt intrusion.

Methods of land application can vary, depending on the conditions at each location. The methods can be classified as irrigation, overland flow, and infiltration-percolation systems. Irrigation is the application to the land of wastewater, by spray or ridge and furrow, to enhance the growth of plants. Overland flow is the application of wastewater to grassed slopes. The vegetation acts as a fixed film contactor. Infiltration-percolation is the application of large amounts of water to a porous soil, which infiltrate the soil surface.

Although land disposal has been used for many years, there are a large number of unknown factors concerning the effects of the treated wastewater on the environment, and vice versa. Many research projects have been undertaken or are underway to provide the needed information. The research has shown that, with good management and proper monitoring and control of the systems, successful use of land application can be obtained. In designing a

successful system, the following factors must be considered:

1. Availability and type of land.
2. Aesthetics.
3. Economics.
4. Topography.
5. Underlying geologic formations.
6. Groundwater level and quality.
7. Soil type and drainability.
8. Wastewater characteristics and degree of pretreatment.
9. Purification effects of soil, soil bacteria, and plants.
10. Public health.
11. Possible buildup of toxic substances.

A thorough consideration of these factors requires the combined efforts of geologists, environmental engineers, agronomists, soil scientists, social and behavioral scientists, and medical-health personnel. Because of the complexity of land application systems and the number of disciplines involved, great care should be taken in designing a land application system for a small plant. To point out the complexity in such a system, some of the more important factors are discussed below.

The degree of treatment before land application will depend on the method of application; the rate of application; odor problems; possible ponding; type of vegetation to be irrigated; physical, chemical, or biochemical properties of the soil; and public health concerns. These factors, important in determining the required pretreatment, are interrelated with each other and with the other design considerations mentioned previously. For example, in considering public health concerns, the possibility of inhaling pathogenic aerosols from a spray irrigation system should be evaluated. Mosquito breeding can be a problem resulting from ponding, if high rates of application are used. The presence of minerals such as sodium or nitrogen, which can build up in a groundwater supply, may be a problem. The minerals present in wastewater will be affected in different ways by the purification effects of the soil, soil bacteria, and plants.

The natural purification processes depend on the interaction of many physical, chemical, or biochemical factors. The effects of these factors will vary, depending on the conditions at a land application site. Some of the important factors would include:

1. Oxidation or reduction.
2. Adsorption or desorption.
3. Ion exchange.
4. Precipitation or dissolution.
5. Aerobic or anaerobic decomposition.
6. Antibiosis or symbiosis.
7. Filtration.
8. Plant uptake of minerals.

More detailed discussion of these factors is included in references (80), (81), (82), (84), and (85). Several publications are also available covering results of land application projects.

Major projects include the Muskegon County wastewater management system (86) (87), and the Penn State studies (88) (89), both of which use spray irrigation, and the Flushing Meadows project (90) in Arizona, which uses infiltration for groundwater recharge.

2.9.3 Reuse of Wastewater

Reuse of wastewater can be divided into four categories: municipal, industrial, recreational, and irrigational reuse. Many projects have reclaimed water for different reuse applications. Lawrence (91) tabulated some of the existing wastewater reclamation projects (Table 2-10), and discussed systems to satisfy effluent quality requirements for reuse of wastewater. Irrigational reuse has been discussed in Section 2.93. Factors involved in other reuse applications and some of the water quality criteria are discussed below.

Recreational reuse is normally the impoundment of wastewater for recreational purposes and is often combined with irrigational reuse. Indian Lake Reservoir near Lake Tahoe serves as a reservoir for irrigation water as well as a recreational lake. The water quality criteria must be stringent, because dilution is not available or adequate in most instances. The wastewater quality parameters affecting recreational use the most are SS, oxygen-demanding organics, bacteriological and virological quality, nutrients, and toxicants. Reduction and control of the pollutants defined by these parameters would allow reuse of treated wastewater for this application. The best documented example is the recreation project at Santee, California (91).

Industrial reuse accounts for the largest quantity of wastewater use in the United States. Most of this water is used for cooling purposes, with smaller amounts for boiler-feed water and process waters. Most industries are accustomed to drawing available water and treating it to a degree suitable for a particular use. Water quality requirements for various industrial activities would include the following:

1. Electronics—high-quality water, often approaching completely demineralized water.
2. Food Processing—municipal water quality or better, for specific processing needs.
3. Manufacturing (including chemicals)—municipal water quality or lower, depending on the product to be manufactured.
4. Pulp and Paper Mills—specific requirements on dissolved inorganic substances—particularly chlorides and iron—and hardness (low color and turbidity also required for some operations).
5. Steel and Metals—generally used low-quality water; particularly concerned about corrosion, hence restrictions on chlorides and pH and temperature in cooling operations.
6. Boiler Feed Water—required quality of feed water dependent on operating pressure range of boiler; specific requirements approaching complete demineralization, including removal of ammonia, phosphates, organics, dissolved inorganics, and deoxygenation (even municipal-quality water is treated before becoming acceptable boiler-feed water).
7. Cooling Water—quality requirements low; biologically treated municipal wastewater often used directly as cooling water (low-quality waters may require chemical additions for prevention of mineral scale or biological slime formation).

TABLE 2-10

SUMMARY OF EXISTING MUNICIPAL WASTEWATER RECLAMATION PROJECTS (91)

Reclaimed Water Use	Location	Reclaimed Water Production mgd	Basic Type of Treatment
MUNICIPAL			
Groundwater Recharge	Whittier Narrows, California	10	Secondary (Biological)
Introduction to Water Distribution System	Windhoek, South Africa	1.4	Secondary (Biological) + Pond + Phys.-Chem.[1]
Groundwater Recharge	Nassau County, New York	18.5	Secondary (Biological) + Phys.-Chem.
INDUSTRIAL			
Power Plant Cooling Water	Burbank, California	1	Secondary (Biological)
Chemical Plant Cooling Water	Midland, Michigan	6	Secondary (Biological)
Power Plant Cooling Water	Los Alamos, New Mexico	2	Secondary (Biological)
Steel Mill Cooling and Process	Baltimore, Maryland	95	Secondary (Biological)
Refinery Cooling, Boiler Feed, and Cooling	Amarillo, Texas	6	Secondary (Biological)
Refinery and Petrochemical Cooling and Boiler Feed	Odessa, Texas	2.5	Secondary (Biological)
Industrial Water	Denver, Colorado	10[2]	Secondary (Biological) + Phys.-Chem.
RECREATIONAL			
Recreational Lakes, Swimming Pool	Santee, California	0.4	Secondary (Biological) + Natural Media Filtration
Recreational Lake	Camp Pendleton, California	0.7	Secondary (Biological) + Pond
IRRIGATIONAL			
Alfalfa Irrigation	Galt, California	0.3	Primary + Ponds
Citrus Grove Irrigation	Pomona, California	6	Primary + Ponds
Pasture, Corn, and Rice Irrigation	Woodland, California	1.9	Primary + Ponds
Pasture, Corn Irrigation	South Lake Tahoe, California	3.5	Secondary (Biological) + Phys.-Chem.
Cotton and Milo Irrigation	Fresno, California	18	Primary
Landscape Irrigation at CCCSD	Pacheco, California	0.5	Secondary (Biological)
Irrigation of Golden Gate Park	San Francisco, California	1	Secondary (Biological)
Golf Course Irrigation	Ventura, California	0.5	Secondary (Biological)

[1] Phys.-Chem. usually means coagulation-sedimentation, activated carbon adsorption, filtration, nitrogen control.

[2] Plans call for capacity expansion to 100 mgd by 1986 for general municipal use as well as industrial use.

Municipal reuse of wastewater has been practiced for about 50 years in nonpotable applications. Such uses include flushing water in water-short resort areas, where dual distribution systems have been provided.

Indirect reuse of river water (as potable water) occurs if upstream communities discharge wastewater into the river. A similar condition exists in groundwater supplies, in areas where groundwater recharge is practiced. In both situations, dilution water is an important factor.

Direct reuse is now receiving added attention because of water shortages in many areas. The main experience in direct reuse has been in Windhoek, South Africa, where about one-third of the total water supply consists of treated wastewater. In this case, the treatment consists of trickling filtration, maturation ponds, alum flotation, foam fractionation, filtration, carbon treatment, and breakpoint chlorination.

The accepted quality criteria for municipal water supplies are the USPHS drinking water standards of 1962. These standards were developed to judge the quality of treated water drawn from relatively pure sources. These standards are not adequate in the areas of trace metals, trace organics, and virological quality, which would be extremely important in evaluating renovated wastewater for direct municipal reuse. There is also concern about the concentration of sodium and nitrogen compounds in reclaimed water and the reliability of reclamation treatment systems.

There are many unanswered questions related to human health about water reuse for municipal water purposes. Currently, reuse for drinking water purposes should be allowed only if all other reasonable water sources become unavailable. If reuse is considered, it should be approached cautiously, with the maximum amount of researching and monitoring.

2.10 Upgrading or Enlarging Existing Plants

Upgrading or enlarging existing treatment plants may be required because of:

1. Inadequate initial design.
2. Increase or change in loading patterns.
3. Deterioration of facilities.
4. Changes in effluent or receiving water quality standards.

The goals listed in Chapter 3 must be kept in mind in the upgrading or enlarging of existing small wastewater treatment plants. Duplicating an existing treatment process, equipment, or plant is not always the most cost-effective method of upgrading one or more characteristics of a plant effluent. The EPA publication, *Process Design Manual for Upgrading Existing Wastewater Treatment Plants (92),* directs itself to the upgrading of treatment facilities and should be consulted before any plant upgrading is undertaken. This subject is also discussed in references (93) and (94).

Representative simpler methods of upgrading or enlarging treatment plants are presented below. Refer to the design criteria presented in later chapters for specific information.

2.10.1 Clarifiers

Generally, the efficiency of a clarifier is measured by the amount of solids separated from wastewater and retained in the clarifier. Inefficient clarifiers are usually hydraulically or organically overloaded, poorly operated, or inadequately designed. Upgrading alternatives include:

1. Adding clarifier area.
2. Adding flocculation or chemicals ahead of the clarification process.
3. Adding parallel centrifugal wastewater concentrators.
4. Increasing the settleability of the SS by reducing anaerobic conditions (in which methane, nitrogen, or other gas releases buoy up the solids), preaerating, prechlorinating, decreasing sludge age, or shortening sludge retention time in clarifier to control gas formation.
5. Improving oil and grease removal.
6. Improving screening and grit removal.
7. Improving skimming.
8. Equalizing flows into clarifier by using an equalizing tank.
9. Eliminating surges in flow by using smaller or variable speed pumps.
10. Improving inlet and outlet design.
11. Improving sludge withdrawal system.
12. Improving scum removal system.
13. Improving cleaning and general maintenance.
14. Returning activated sludge to the primary influent.
15. Adding activated carbon to the primary influent.

2.10.2 Trickling Filters

The efficiency of a biological filter depends on maintaining an active population of aerobic microbes in a thin layer of zoogleal film on the filter media surfaces. Some of the variables affecting the performance of trickling filters are:

1. Wastewater Characteristics—large variations in the type or quantity of oxygen-demanding biodegradables reduce the efficiency of a filter.
2. Filter Media—a larger surface area per unit of volume, along with a higher percentage of void space per unit of volume in a packed media, normally allows higher organic and hydraulic loadings without loss of efficiency.
3. Filter Depth—deeper filters with lower loadings promote nitrification (depth needed for best treatment efficiency varies with type of media and loading).
4. Recirculation—media must be kept wet; good biological activity requires relatively uniform organic feeding (sometimes recirculation of up to 400 percent is necessary for improving efficiency, if feed flow otherwise is intermittent).
5. Hydraulic and Organic Loading—large variations or surges in either hydraulic or organic loading (particularly in hydraulic loading) will have a marked effect on efficiency.

6. Ventilation–essential, because aerobic conditions are required for efficient microbial activity.
7. Wastewater Temperature–performance of filters (particularly nitrification) deteriorates if temperature is lowered.

Upgrading possibilities for trickling filters are listed in Table 2-11.

2.10.3 Activated Sludge

The efficiency of an activated sludge unit depends on maintaining over 1 to 2 mg/l of dissolved oxygen and an active population of aerobic microbes in a thoroughly mixed aeration tank. Table 2-12 lists the upgrading possibilities for activated sludge plants.

2.10.4 Wastewater Treatment Ponds

The efficiency of ponds depends on 1) maintaining an optimum environment for an active population of the essential microbes in contact with all the biodegradable wastewater constituents for a sufficient length of time, and 2) adequate removal of bacterial, algal, and other microbial cells from the pond effluent before discharge.

Techniques now available for upgrading this type of treatment are discussed in several publications (95) (96). Successful process modifications include:

1. Improving the pond outlet system to reduce escape microbial cells from each pond.
2. Decreasing pond loading.
3. Increasing the number of pond cells in the system.
4. Adding pond recirculation.
5. Adding baffles to unaerated ponds to improve plug flow characteristics.
6. Improving the methods for distributing influent uniformly across the pond cell.
7. Improving dike construction and maintenance.
8. Adding storage cells with sufficient capacity for twice-a-year-only discharge.
9. Adding supplemental aeration or mixing.
10. Adding polishing units such as rock filters, intermittent sand filters, land application, chemical addition, microstrainers, and chlorination-clarification.

Design details for these modifications are presented in Chapter 10.

The primary purposes of such modifications to ponds are to:

1. Prevent short circuiting of wastewater in unaerated ponds.
2. Prevent escape of unstabilized organic material in the effluent.
3. Provide supplemental oxygen.
4. Provide better conditions for removal of algal and bacterial cells.
5. Provide storage adequate to use intermittent discharge, if effluent quality is periodically below requirements.

TABLE 2-11

POSSIBLE TRICKLING FILTER PLANT MODIFICATIONS

Modification	When To Use	Remarks
Add positive ventilation	For strong wastes and deep filters in which natural draft is not adequate to provide oxygen needed	Check with media manufacturers
Change media	In rock filters in which increase in media surface (and biomass) will provide needed performance improvement	Synthetic media are available with from two to four times the surface-to-volume ratio of stone; fine rock media cannot be used for high loadings, because of clogging
Increase recirculation	For lightly loaded filters in which initial removal capacity is not fully utilized in one-pass contact time, and to keep media wet	May also be needed for dilution to maintain aerobic conditions in heavily loaded filters
Add sludge recirculation	Where more biomass is needed to increase treatment	Requires thorough pilot study
Add activated sludge		
After trickling filter	If polishing is required after an overloaded filter	Advantageous if first unit can be converted to "high rate" (high loading) operation
Ahead of trickling filter	If the trickling filter can be used for nitrification	Effluent polishing such as filtration can greatly improve treatment
Add nitrifying trickling filter	After settling tanks of existing secondary system, to provide polishing and nitrification	Because of low sludge yield, effluent probably can be applied directly to granular-media filters for solids removal; advantageous if effluent filters are to be included in upgrading

TABLE 2-11 (continued)

POSSIBLE TRICKLING FILTER PLANT MODIFICATIONS

Modification	When To Use	Remarks
Add roughing filter ahead of trickling filter	To reduce loading on overloaded filter	Intermediate settling not needed; roughing filters are quite temperature sensitive
Add recirculation and convert low rate filter to high rate filter	To increase capacity of low-rate filter	Only if final clarifier has required capacity
Add aerated equalization tank	To equalize hydraulic loading rates	
Change dosing tank or change to smaller pump or variable speed pumps	To reduce time when not dosing	
Improve distributor arm	To change dosing rate or make distribution uniform	
Improve drainage system	To improve natural ventilation	Will also reduce odors and improve settling at final clarifier
Add septage in off seasons to aerated equalization tank	To equalize organic loading at plant with large seasonal fluctuations	Some small plants almost cease functioning during school vacations, resort off seasons, etc.
Improve clarification by adding clarifier, by chemical addition, by adding flocculator, and/or by upgrading existing primary clarifier	To reduce organic loading on filter	If not overloaded hydraulically
Change from one-stage to two-stage by adding clarifier and high rate filter	To increase capacity of organically overloaded plant	If not overloaded hydraulically
Add polishing units such as maturation ponds, filters, activated carbon, or post-aeration	If effluent needs additional treatment before discharge and to reduce peak discharges of BOD, SS, or *E coli*	

TABLE 2-12

POSSIBLE ACTIVATED SLUDGE PLANT MODIFICATIONS

Modification	When To Use	Remarks
Tighten process control	To minimize soluble BOD in aerator effluent and improve settling characteristics of sludge	Requires flexibility in return waste sludge and air rates and requires control instrumentation
Add final clarifier capacity	If solids loading on final clarifier limits the solids level that can be maintained in aerator	Check buildup of sludge in clarifiers at high flow rates
Increase aerator solids level	To increase removals of waste constituents assimilated by slow-growing microorganisms	Consider effect on final tanks and adequacy of oxygen supply
Increase air supply or improve its distribution	If DO cannot be maintained above 1 to 3 ppm at all loads and locations	Consider oxygen aeration
Change contact time to 15 to 30 min	In contact stabilization system in which tests indicate rapid initial removal is below level desired	Check effects on settling characteristics of sludge; requires small variation in flow
Divide reactor into multiple compartments in series	If short circuiting has significant effect on BOD levels in aerator effluent	
Change to contact stabilization	For upgrading overloaded plug flow of multicompartmented tanks in which initial removal is adequate	Avoid in small plants with wide diurnal flow variations

TABLE 2-12 (continued)

POSSIBLE ACTIVATED SLUDGE PLANT MODIFICATIONS

Modification	When To Use	Remarks
Change to step aeration	For upgrading overloaded plug flow of multicompartmented tanks to higher removals than possible with contact stabilization	
Change to completely mixed activated sludge	For upgrading any conventional activated sludge system and for conversion of small contact stabilization plants	Piping changes will be very costly for long plug-flow tanks; step aeration preferable in such cases
Improve existing clarification	To decrease solids loading on aeration units	
Change to completely mixed and add polishing units	For increasing flow capacity in extended aeration units	
Add polishing units such as maturation ponds, filters, activated carbon or postaeration	To improve effluent quality and to reduce peak discharge of BOD, SS, or *E coli*	
Change from diffused air system to mechanical aerators	To increase dissolved oxygen in aeration tank without increases in energy or operating cost	
Add a second stage aeration and clarifier unit	To obtain nitrification while increasing capacity	
Add super-rate roughing filter ahead of aeration unit	To decrease solids loading on aeration units	

6. Provide adequate storage for complete containment, if evaporation and infiltration equal wastewater inflow (care must be taken to prevent such nuisances as flies, mosquitoes, or odors if complete containment is used).

2.10.5 Sludge and Process Sidestreams

The effectiveness of sludge treatment and resulting process sidestream treatment is measured by whether the treated sludge can be satisfactorily disposed of without nuisance and whether the process sidestream, during handling and treatment, causes nuisance conditions, interferes with other plant treatment processes, or degrades the plant effluent.

Designs for upgrading the treatment and handling of sludge and process sidestreams are described in references (93), (98), and (99). Design details are also summarized in Chapter 14.

2.11 Pilot- and Laboratory-Scale Testing

Pilot- or laboratory-scale testing of a treatment process or of equipment is sometimes employed as a design aid. However, a pilot plant for treatment process testing is seldom employed for domestic wastewater for small municipalities, unless a large proportion of the flow is from industry. Some laboratory-scale testing is advisable to determine biological rate coefficients for specific wastewaters, if a pilot plant is not available. If feasible, however, pilot-scale testing of treatment systems is the best method of design.

2.12 Reliability Considerations

It is very important that small wastewater treatment facilities be designed and constructed in such a manner that they can reliably and consistently produce a treated wastewater meeting effluent and receiving-water quality standards, when operated and maintained properly.

EPA reliability guidelines for wastewater treatment plants are presented in *Design Criteria for Mechanical, Electric, and Fluid System and Component Reliability* (100). These guidelines should be considered by designers of treatment facilities for small communities.

2.13 Process Selection

2.13.1 Variations to Meet Growth

The ratio of extreme minimum flow on the minimum day in a year to peak flow on the maximum day in the same year may be from 10-20 to 1 at small wastewater works. Even the ratio of the maximum day flow to average day flow in a year is usually from 5 to 10 to 1. Infiltration of groundwater and stormwater into the collection system can double the average wastewater flow from a community. If a major amount of the flow to the plant is seasonal (schools, resorts, etc.), the variations can be even greater. Engineers must take into account these large variations in the design of the plant.

Large variations in flow to clarifiers, contact-stabilization systems, and certain advanced wastewater treatment units will adversely affect the efficiency of treatment. Equalization tanks can be used to reduce the daily flow variations. For further information on equalization of flows, see Chapter 4. Treatment ponds and extended aeration units are less affected by large flow variations than are other types of treatment commonly used in small plants.

Some types of structures are more amenable to upgrading than others. For instance, 5- to 6-ft (1.5- to 1.8-m) deep low-rate filters can be modified to high-rate filters by recirculating a portion of the filter effluent to the filter feed and changing the distributor arm if the clarifiers, piping, and drains are designed for the higher loading. Similarly, extended aeration units can be converted to step aeration, then to completely mixed units, and later to contact stabilization units, with forethought on the part of a designer. Another method of meeting variations of flow in activated sludge units is to compartmentalize the tanks and use sufficient portions to make volumes roughly proportional to the flow.

2.13.2 Wastewater Treatment Processes

The wastewater treatment processes that should be considered for use in plants serving municipalities of 100 to 10,000 persons are those requiring a plant that can meet the goals stated in Chapter 1. The effluents from most plants of less than 1 mgd ($0.044 m^3/s$) will be required to meet secondary effluent requirements.

Typical plant configurations that, if properly designed, could meet secondary treatment standards and also the other goals of Chapter 1, are shown in Figure 2-10. If the hydraulic and organic loadings do not vary greatly, the equalization tank might not be needed. If adequate operation and maintenance are available, the polishing process may not be needed.

Conditions under which these processes should be considered are listed in Table 2-13 (37).

A comparison of operational characteristics of some systems is presented in Table 2-14.

2.13.3 Sludge Treatment Processes

For small treatment plants, most types of sludge processing are too complicated and require a higher level of experience than is usually available. The types most commonly employed are aerobic digestion and anaerobic digestion. Stabilized sludge is usually dried on drying beds, although other processes are sometimes used in larger or more sophisticated plants. The various sludge treatment processes available are described in Chapter 14. Detailed information on the treatment of sludge and process sidestreams is found in references (98) and (99).

Only sludge dewatering is required for sludges from well-designed stabilization ponds and sometimes, under certain circumstances, for oxidation ditches, for extended aeration activated sludge, and for extended filtration tower systems. Sludge digestion may not be needed, if the sludge aging in the last three processes is sufficient for adequate stabilization and if the plant is sufficiently isolated. Lime treatment may allow satisfactory drying of an

undigested sludge that has undergone a longer biological treatment. The stabilized sludge should be withdrawn for dewatering and disposal before solids accumulation might begin to affect SS removal in the final clarifier.

2.13.4 Integration of Processes

Once the information on present and projected flows and organic loadings (with expected variations and characteristics) has been determined, a preliminary study should be made of the various combinations of processes that can efficiently meet effluent requirements. Then, three to five of the most feasible processes should be selected for more detailed cost-effectiveness studies (see **Chapter 18**).

The need for some commonly included process units in treatment systems depends on location climate, hydraulic loading, organic loading, characteristics of the organic loading, effluent requirements, type of operation and maintenance personnel available, and funding possibilities. Such units include screens, comminutors, equalization tanks, primary clarifiers, sludge stabilization processes, and polishing units. All secondary treatment systems require disinfection and sludge-handling capabilities. For operation and maintenance, all plants will require a laboratory and a workshop, although these may be limited to bare necessities, depending on availability of backup services and facilities.

Primary clarifiers may not be required, or the size may be limited to that needed to remove only the coarsest settleable solids and floatable greases and oils (if the biological process can effectively handle the increased load at a cost less than that of adding clarifier capacity).

A flow diagram (such as that shown in Figure 2-11) should be developed for most of the alternative systems—those that include recirculation of recycled process sidestreams—to insure that all inputs into each unit are considered in the design. Recirculated sludge and recycled supernatant, centrate, or filtrate usually carry high concentrations of solids, even though the flow rate may be small. The drainage from sludge-drying beds shortly after the beds are loaded can also be a temporary problem. Some solids are gasified during treatment processes, and thus a careful balancing is required.

2.14 Operation and Maintenance Design Requirements

The optimum space and facilities for operating and maintaining wastewater treatment processes vary for each type of equipment, each layout pattern, and each specific plant site. The equipment manufacturers' manuals indicate recommended operation and maintenance space and facilities. (They are not, however, necessarily optimum under all conditions.) Some design manuals list a 3- to 4-ft (0.9 to 1.2-m) clear space around pumps, while the optimum on different sides might be 0, 3, 8, or 20 ft (0, 0.9, 2.4, or 6.1 m).

Individual attention must be given on how to best install, replace, repair, operate, and maintain each piece of equipment in conjunction with all adjacent equipment, taking into consideration site and structural limitations. Questions that should be considered by designers in optimizing operations and maintenance space and facilities include:

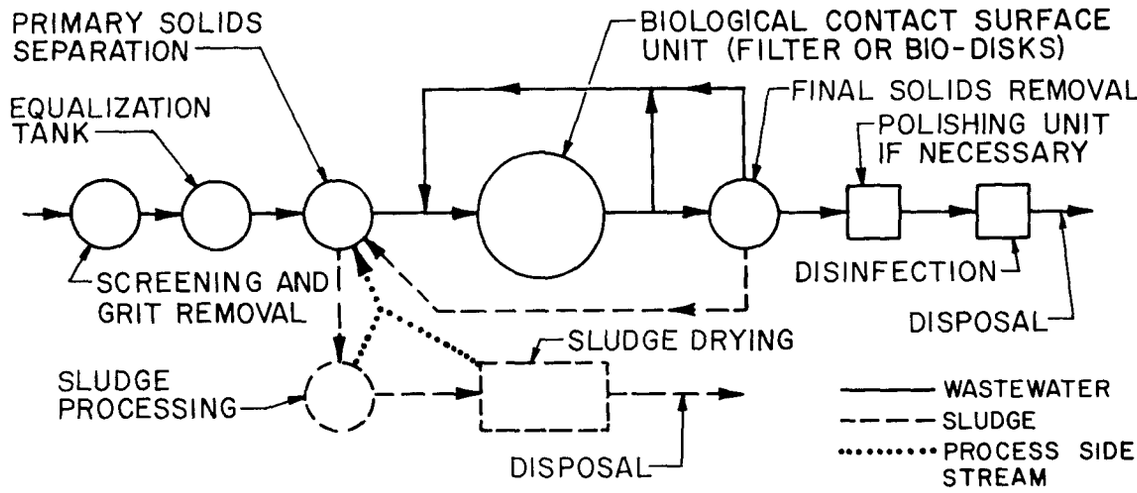

BIO-DISK OR TRICKLING FILTER PLANT

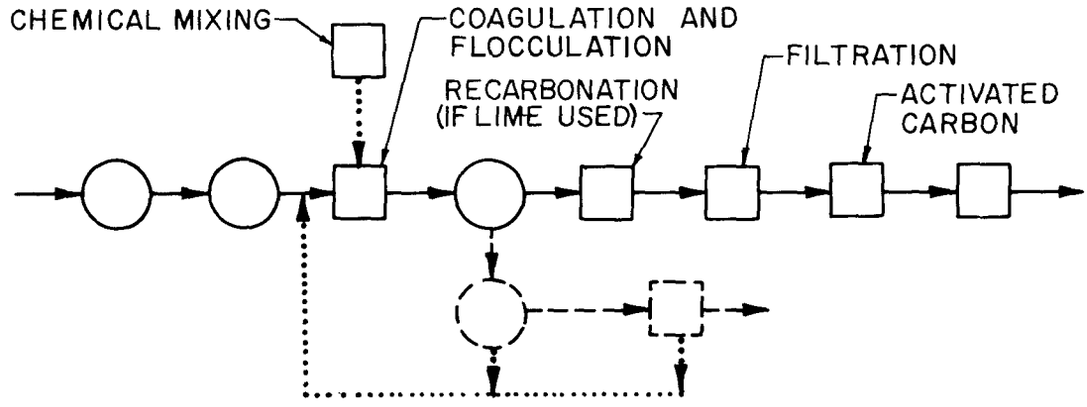

PHYSICAL-CHEMICAL TREATMENT PLANT

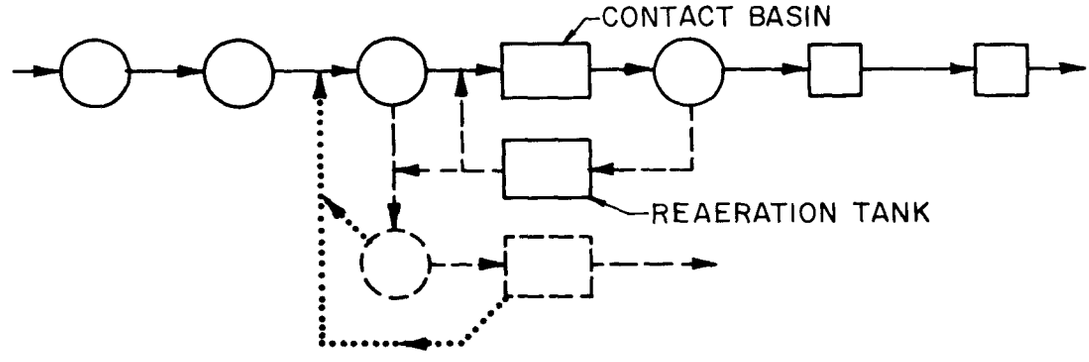

CONTACT STABILIZATION ACTIVATED SLUDGE PLANT

FIGURE 2-10

SECONDARY TREATMENT CONFIGURATIONS

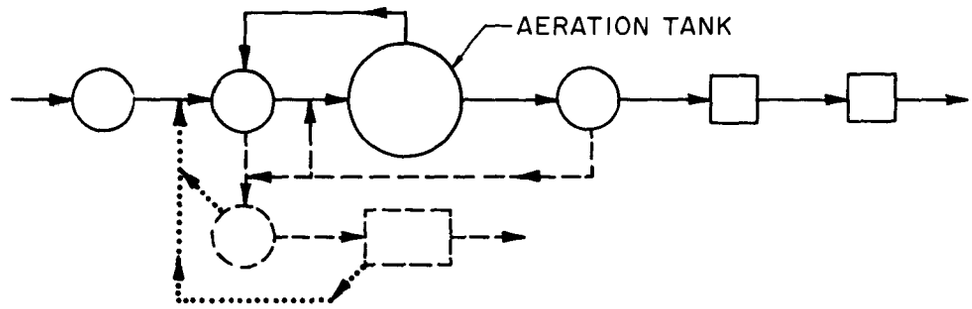

COMPLETE MIX ACTIVATED SLUDGE PLANT

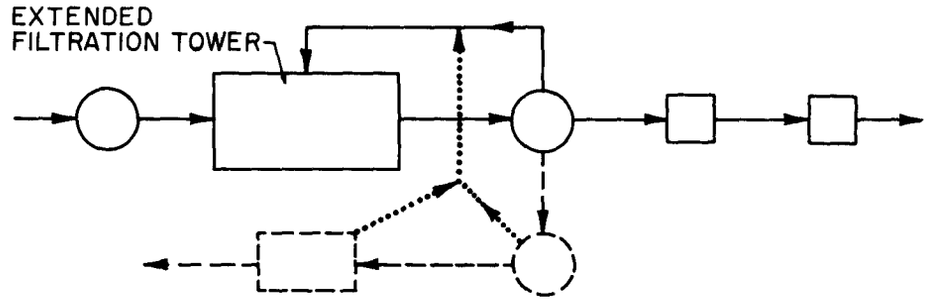

EXTENDED AERATION OR EXTENDED FILTRATION PLANT

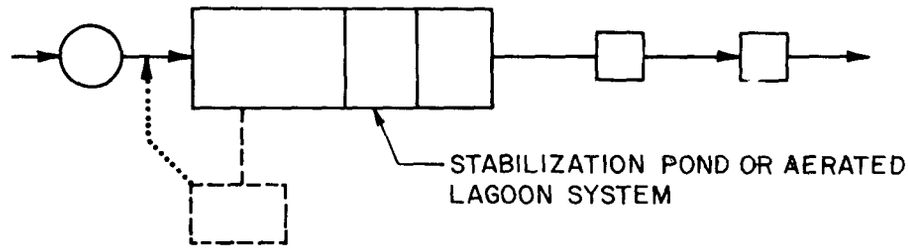

AERATED LAGOON OR STABILIZATION POND FACILITY

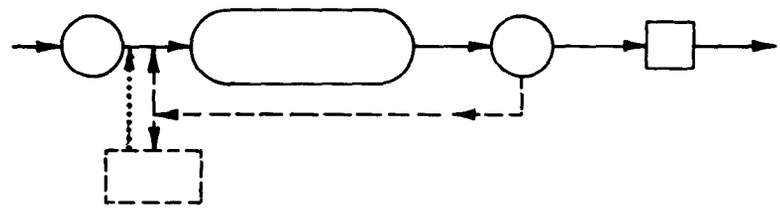

OXIDATION DITCH FACILITY

FIGURE 2-10 (continued)

SECONDARY TREATMENT CONFIGURATIONS

TABLE 2-13

APPLICATION OF TREATMENT PLANTS FOR SMALL COMMUNITIES

Process	Type Wastewater and Locations Available
Rotating Biodisk	Small communities. Cover against freezing, heavy precipitation, or to control odors. Can be used if filamentous organisms would trouble other biological processes, because they are less susceptible to such activity.
Trickling Filters Low Rate Intermediate Rate High Rate Super Rate Roughing Extended (Tower)	Cold weather affects efficiency, so covering may be required. Nitrification possible with deep filters and low loadings. Can be used if filamentous organisms would trouble other biological processes. Low contact surface loading rates necessary to achieve high removal efficiencies.
Activated Sludge	
Complete Mix	General application. Resistant to shock organic or toxic loadings.
Contact Stabilization	Good if BOD is largely colloidal or suspended. Used in package plants, if large fluctuations in flow are not expected.
Extended Aeration	Good for smaller communities. Good for package plants in housing developments and recreational areas.
Oxidation Ditch	General application. Good for smaller communities. Generally reliable with minimum operation.
Stabilization Ponds	Good if large land areas are available. Should process for microbial cell removal before discharge or provide storage for semiannual discharge. Completely contained type can be used if infiltration and evaporation exceed inflow and precipitation.
Physical-Chemical	Can be used if intermittent organic loading makes biological treatment unreliable, if space is limited (e.g., cold climates require indoor housing), and if high-quality effluent, including phosphorus removal, is required.

TABLE 2-14

OPERATIONAL CHARACTERISTICS OF VARIOUS TREATMENT PROCESSES

Item	PROCESS				
	Rotating Disk	Trickling Filters	Activated Sludge[1]	Activated Sludge[2]	Facultative Lagoons
Process Characteristics					
Reliability with respect to:					
Basic Process	Good	Good	Fair	Very Good	Good
Influent Flow Variations	Fair	Fair	Fair	Good	Good
Influent Load Variations	Fair	Fair	Fair	Good	Good
Presence of Industrial Waste	Good	Good	Good	Good	Good
Industrial Shock Loadings	Fair	Fair	Fair	Good	Fair
Low Temperatures (<20° C)	Sensitive	Sensitive	Good	Good	Very Sensitive
Expandability to Meet:					
Increased Plant Loadings	Good, must add disk modules	Good	Fair to good if designed conservatively	Good, ultimately more volume will be required	Fair, additional ponds required
More Stringent Discharge Requirements with Respect to:					
SS	Good, add filtration or polishing lagoons	Good, add filtration or polishing lagoons	Good, add filtration or polishing lagoons	Good, add filtration or polishing lagoons	Add additional lagoons and filtration
BOD	Improved by filtration	Improved by filtration	Improved by filtration	Improved by filtration	Improved by filtration
Nitrogen	Good, denitrification must be added	Good, denitrification must be added	Good, nitrification-denitrification must be added	Good, denitrification must be added	Fair
Operational Complexity	Some, to simple	Some, to simple	Moderately Complex	Some	Simple
Ease of Operation and Maintenance	Very Good	Very Good	Fair	Very Good	Very Good
Power Requirements	Low	Relatively High	High	Relatively High	Low
Waste Products	Sludges	Sludges	Sludges	Sludges	Sludges
Potential Environmental Impacts	Odors	Odors	–	–	Odors
Site Considerations					
Land Area Requirements	Moderate plus buffer zone	Moderate plus buffer zone	Moderate plus buffer zone	Large plus buffer zone	Large plus buffer zone
Topography	Relatively Level	Relatively Level	Relatively Level	Relatively Level	Relatively Level

[1]Complete mix and contact stabilization.
[2]Extended aeration and oxidation ditch.

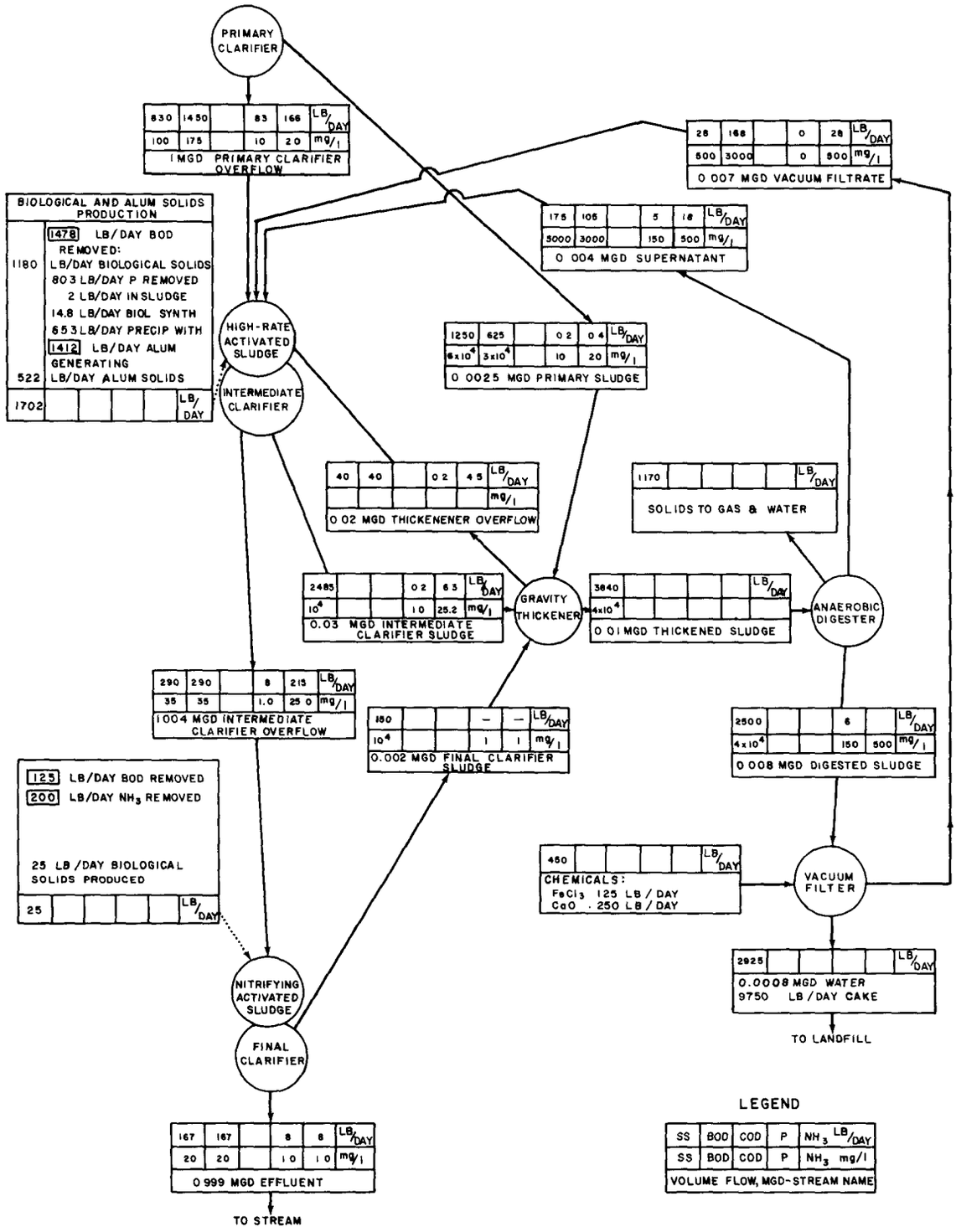

FIGURE 2-11

EXAMPLE PLANT FLOW DIAGRAM

1. What minimum space is required on each side, top, and underneath, for installation, replacement, inspection, repair, operation, and maintenance (IRIROM) of each piece of equipment?
2. Will scaffolding be required for any IRIROM procedure? If so, which, if any, parts, including wall and floor attachments, of the scaffolding should be made permanent? Should space be provided for temporary scaffolding?
3. Should space be provided under the equipment in the form of pits or tunnels or by placing the equipment on platforms to make all required IRIROM procedures feasible? Can such spaces underneath be used for placing other facilities also? Have all underfloor spaces been provided with adequate drains and been made safe against toxic, flammable, or explosive gases? Have methods been included to ventilate and to prevent or control possible odor emissions?
4. Are facilities and space available to remove any and all parts and to bring in and install any replacements? Are overhead, traveling cranes, winches, or chain hoists needed for any IRIROM procedures? Will there be enough use for these to make some permanent provisions in the structure? Have provisions been made to store the temporary equipment or otherwise make it readily available by leasing or renting?
5. Are adequate lighting and ventilation facilities available for all IRIROM procedures?
6. If pieces of equipment must be replaced, are wall or ceiling openings sufficient to do so without enlargement?
7. Are service outlets for all utilities, such as electricity, gas, and water, required to complete all IRIROM procedures readily available near each piece of equipment or facility? For instance, are hose bibs for flushing purposes located close to all areas that require regular or periodic cleaning?
8. Are drains, or drainage channels, or low curbs available around tanks, equipment, and facilities to intercept all leaks of water, wastewater, or chemical solution that might otherwise flow over working areas or walkways? Are such channels below floor level and grate covered?
9. Have monitoring, sampling, and flow-gaging locations been designed into the facility? Can the monitoring, sampling, and flow-gaging equipment be easily removed for cleaning or repair? Are they easily accessible?
10. Are all piping, valves, and fittings below floor level, on walls, or more than 6.6 ft (2.0 m) above the floor? Are all valves on the work space side of all piping? Is there sufficient space to loosen stuck valves? Can all valves be removed for repairs? Can all sludge-carrying lines be cleaned after each use?
11. Have all equipment and machinery been designed to keep noise levels below the EPA standard levels?
12. Does the chemical storage area have sufficient room to maneuver both the pallets and the pallet-handling equipment?
13. Are all heating and ventilating ducts located where they will not interfere with placement of piping?
14. Have mechanical or pneumatic means been furnished to remove screenings or grit from pits so it will not be carried by hand up stairways?
15. Will all work areas be sufficiently well lit and roomy for efficient use of personnel

time? Is any space sufficiently difficult to work in to cause operators to avoid working there or to cause supervisors and inspectors to avoid inspecting it?

2.15 References

1. *Wastewater Treatment Plant Design.* WPCF Manual of Practice No. 8, Washington, D.C.

2. *Direct Environmental Factors at Municipal Wastewater Treatment Works.* Camp Dresser & McKee, technical report, U.S. EPA, Office of Water Program Operations, Washington, D.C. (in press).

3. *Facilities Planning Summary,* U.S. EPA (January 1971).

4. Odum, E.P., *Fundamentals of Ecology,* 3rd ed. Philadelphia: W.B. Saunders Co. (1971).

5. Brooks, M., *Planning for Urban Trails.* ASPO, Chicago (December 1969).

6. McHarg, I.L., *Design With Nature.* New York: Natural History Press (1969).

7. Leopold, L.B., et al, *A Procedure for Evaluating Environmental Impact.* Geological Survey Circular 645, U.S. Geological Survey Department, Washington, D.C.

8. Goodman, W.I., and Freund, E.C., ed., *Principles and Practices of Urban Planning.* ICMA, Washington, D.C. (1968).

9. Chapin, F.S., Jr., *Urban Land Use Planning.* Urbana, Ill.: University of Illinois Press (1965).

10. Claire, W.H., *Urban Planning Guide.* ASCE, New York (1969).

11. Lynch, K., *Site Planning,* 2nd ed. Cambridge: MIT Press (1971).

12. *Standard Land Use Coding Manual.* U.S. Department of Transportation, U.S. Government Printing Office (1969).

13. *Guidelines to Water Quality Management.* U.S. EPA, Washington, D.C.

14. McJunkin, F.E., "Population Forecasting by Sanitary Engineers." *Journal of the Sanitary Engineering Division,* ASCE, vol. 90, no. SA4 (1964).

15. *The Methods and Materials of Demography,* two volumes. U.S. Bureau of Census (Washington, D.C.).

16. *Obers Projections, Concepts, Methodology, and Summary Data,* vol. 1. U.S. Water Resources Council, Washington, D.C. (1972).

17. Williamson, P.E., *Wastewater Treatment Facilities in Small Texas Communities.* Master's thesis, Austin: University of Texas (1971).

18. Geyer, J.C., and Lentz, J.J., *Evaluation of Sanitary Sewer System Designs.* Johns Hopkins University School of Engineering (1962).

19. *Manual of Septic-Tank Practice,* rev. 1967. HEW no. (HSM) 72-10020 (formerly PHS no. 526), U.S. Government Printing Office, Washington, D.C. (1967).

20. *Wastewater Engineering.* Metcalf & Eddy, New York: McGraw-Hill (1972).

21. Goldstein, S.N., and Moberg, W.J., Jr., *Wastewater Treatment Systems for Rural Communities.* Commission on Rural Water, Washington, D.C. (1973).

22. *Handbook for Monitoring Industrial Wastewater.* U.S. EPA Office of Technology Transfer, EPA-625/6-73-002 (August 1973).

23. Suburbia Systems, Inc., as referenced by Goldstein, S.N., and Mobey, W.J., *Wastewater Treatment Systems for Rural Communities,* Commission on Rural Water, Washington, D.C. (1973).

24. "Design and Construction of Sanitary and Storm Sewers." WPCF Manual of Practice No. 9, ASCE Manual of Engineering Practice No. 37 (1969).

25. Bennett, E.R., Linstedt, K.D., and Felton, J., *Comparison of Septic Tank and Aerobic Treatment Units: The Impact of Wastewater Variations on These Systems.* Presented at the Rural Environmental Engineering Conference, Warren, Vt. (September 1973).

26. *National Plumbing Code.* United States of America Standards Institute, USASI A40.8 (1955).

27. Hunter, R.B., *Methods of Estimating Loads on Plumbing Systems,* report BMS 65, National Bureau of Standards, Washington, D.C. (1940).

28. *Standard Methods for the Examination of Water and Wastewater,* 13th ed. APHA (1971).

29. *Proposed Criteria for Water Quality,* vol. 1. U.S. EPA, Washington, D.C. (October 1973).

30. *Proposed Water Quality Information,* vol. 2. U.S. EPA, Washington, D.C. (October 1973).

31. *Methods for Chemical Analysis of Water and Wastes.* U.S. EPA Office of Technology Transfer, EPA-625/6-76-003a (1974).

32. Sawyer, C.N., and McCarty, P.L., *Chemistry for Sanitary Engineers,* 2nd ed. New York: McGraw-Hill (1967).

33. Klein, L., *River Pollution II. Causes and Effects.* London: Butterworth & Co. (1962).

34. McKinney, R.E., *Microbiology for Sanitary Engineers.* New York: McGraw-Hill (1962).

35. Palmer, C.M., *Algae in Water Supplies.* U.S. Public Health Service, publication 657, Washington, D.C. (1962).

36. Hawkes, H.A., *The Ecology of Wastewater Treatment.* New York: Pergamon Press (1963).

37. Tchobanoglous, G., *Water Treatment for Small Communities.* Prepared for the Conference on Rural Environmental Engineering, Warren, Vt. (September 1973).

38. *Process Design Manual for Sulfide Control in Sanitary Sewerage Systems.* U.S. EPA, Office of Technology Transfer, EPA-625/1-74-005 (October 1974).

39. Adams, A., and Spendlove, J.C., "Coliform Aerosols Emmited by Sewage Treatment Plants." *Science,* vol. 169, pp. 1218 to 1220 (18 September 1970).

40. Ledbetter, J.O., "Air Pollution from Wastewater Treatment," *Water and Sewage Works,* vol. 113 (2), pp. 43 to 45 (February 1966).

41. Albrecht, C.R., *Bacterial Air Pollution Associated with Sewage Treatment Process.* Master's thesis, Gainsville: Florida University, Gainsville College of Engineering (August 1968).

42. *Air Pollution.* Stern, A.C., ed., vols. 1, 2, 3, 2nd ed. New York: Academic Press (1968).

43. Jones, F.W., "What Are Offensive Odors About a Sewage Works." *Sewage Works Journal,* vol. 4, No. 1, pp. 60 to 71 (January 1932).

44. Kremer, J.G., *Odor Control Methods, Experimentation and Application.* County Sanitation Districts of Los Angeles County, Calif. (no date).

45. Cohn, M.M., "Sewer Works Odors and Their Control." *Sewage Works Journal,* vol. 1, no. 5, pp. 568-577 (October 1929).

46. Turner, D.B., *Workbook of Atmospheric Dispersion Estimates.* National Technical Information service, U.S. Department of Commerce (revised 1970).

47. *Measurement of Odor in Atmospheres.* ASTM D 1391-57 (reapproved 1967).

48. Sawyer, C.N., and Kahn, P.A., "Temperature Requirements for Odor Destruction in Sludge Incineration," *Journal Water Pollution Control Federation,* vol. 32, no. 12, pp. 1274 to 1278 (December 1960).

49. Dague, R., "Fundamentals of Odor Control." *Journal Water Pollution Control Federation,* vol. 44, no. 4, pp. 583 to 594 (April 1972).

50. Post, N., "Counteraction of Sewage Odors." *Journal of Sewage and Industrial Wastes,* vol. 28, no. 2, pp. 221 to 225 (February 1956).

51. Unangst, P.C., and Nebel, C.A., "Ozone Treatment of Sewage Plant Odors." *Water and Sewage Works,* reference no. 1971, vol. 118, RN, pp. R42, 43 (August 1971).

52. Carlson, D.A., and Leiser, C.P., "Soil Beds for the Control of Sewage Odors." *Journal Water pollution Control Federation,* vol. 38, no. 5, pp. 829 to 840 (May 1966).

53. Santry, I.W., Jr., "Hydrogen Sulfide Odor Control Measures." *Journal Water Pollution Control Federation,* vol. 39, no. 3, pp. 459 to 463 (March 1966).

54. Ledbetter, J.O., and Bandall, Clifford, W., "Bacterial Emissions From Activated Sludge Units." *Industrial Medicine and Surgery,* pp. 130 to 133 (February 1965).

55. *Safety in the Design, Operation, and Maintenance of Wastewater Treatment Works.* Technical report, U.S. EPA, Office of Water Program Operations, Washington, D.C. (1975).

56. *Safety in the Operation and Maintenance of Wastewater Treatment Works.* Technical Bulletin, U.S. EPA, Office of Water Program Operations, Washington, D.C. (1975).

57. *Safety in the Design of Wastewater Treatment Works.* Technical Bulletin, U.S. EPA, Office of Water Program Operations, Washington, D.C. (1975).

58. "Safety in Wastewater Works," WPCF *Manual of Practice No. 1,* Washington, D.C. (1959).

59. "Occupational Noise Exposure," *Federal Registrar,* vol. 36, no. 105, 1910.95, OSHA (29 May 1971).

60. Errata published in *Federal Registrar,* vol. 34, no. 96, Walsh-Healey Public Contract Act, *Federal Registrar,* vol. 34, No. 96, rule 50-204.10 (20 May 1969).

61. Beranek, L.L., *Noise and Vibration Control.* New York: McGraw-Hill (1971).

62. *Information on Levels of Environmental Noise Requisite to Protect Public Health and Welfare With an Adequate Margin of Safety.* EPA 550/9-74-004 (March 1974).

63. *Community Noise.* U.S. EPA, NTID 300.3, Government Printing Office, 5500-0041, Washington, D.C. (1971).

64. *Noise Assessment Guidelines.* U.S. HUD, Government Printing Office, 2300-1194, Washington, D.C. (1971).

65. Gatley, W.S., "Industrial Noise Control." *Mechanical Engineering* (April 1971).

66. *Fundamentals of Noise: Measurement, Rating Schemes and Standards.* National Bureau of Standards, NTID 300-15, U.S. Government Printing Office, Washington, D.C. (1972).

67. Beranek, L.L., "Industrial Noise Control." *Chemical Engineering* (27 April 1970).

68. Seebold, J.G., "Process Plant Noise Control at the Design Engineering Stage." *Transactions of the ASME,* paper no. 70-pet-11 (1970).

69. *Environmental Impact Analysis: An Introduction to Analytical and Presentation Methods.* California Council of Civil Engineers and Land Surveyors, Sacramento: Central Printing Co. (July 1972).

70. Cheremisinoff, P.N., and Young, R.A., "Materials and Methods of Noise Control." *Pollution Engineering* (October 1974).

71. Becker, R.J., and Skistis, S.J., "Hydraulically Operated Machine Noises." *Environmental Science and Technology* (November 1974).

72. Smith, S.A., and Wilson, J.C., "Trucked Wastes: More Uniform Approach Needed." *Water and Wastes Engineering* (March 1973).

73. Kolega, J.J., "Design Curves for Septage." *Water & Sewage Works* (May 1971).

74. Weinberger, L.W., Waller, R., and Gumtz, G.D., "Vessel Waste Control At Duluth-Superior Harbor." *Pollution Control in the Marine Industries,* T.F.P. Sullivan, ed., International Association for Pollution Control, pp. 187 to 220, Washington, D.C. (1973).

75. Bruderly, D.E., and Piskura, J.R., "Solid Waste, Liquid Waste, Air Pollution and Noise Pollution Management Planning for Ports." *Pollution Control in the Marine Industries,* pp. 235 to 265.

76. McKee, J.E., and Wolf, H.W., *Water Quality Criteria,* 2nd ed. Publication no. 3-A, State Water Quality Control Board, Sacramento (1963).

77. *Water Quality Criteria.* Report of the National Technical Advisory Committee to the Secretary of the Interior, FWPCA, Washington, D.C. (April 1968).

78. McGauhey, P.H., *Engineering Management of Water Quality.* New York: McGraw-Hill (1968).

79. *Proposed Criteria for Water Quality.* U.S. EPA, Washington, D.C. (October 1973).

80. *Wastewater Treatment and Reuse by Land Application,* vol. 1, U.S. EPA, Office of Research and Development, EPA-660/2-73-006a, Washington, D.C. (1973).

81. Ibid., vol. 2.

82. *Evaluation of Land Application Systems.* Technical Bulletin, U.S. EPA, Office of Water Program Operations, Washington, D.C. (1974).

83. *Survey of Facilities Using Land Application of Wastewater.* U.S. EPA, Office of Water Program Operations, Washington, D.C. (1973).

84. Fogg, C.E., *Land Application of Sewage Effluents.* Presented at the 28th annual meeting, Soil Conservation Society of America, Hot Springs, Ark. (October 1973).

85. *Water Pollution Control in Low Density Areas.* Proceedings of Rural Environmental Engineering Conference, W.J. Jewell and R. Swan, eds., Hanover, N.H.: University Press of New England (1975).

86. Cowlishaw, W.A., "Update on Muskegon County, Michigan Land Treatment System." Presented at ASCE annual and national Environmental Engineering Convention, Kansas City, Mo. (October 1974).

87. Chiken, E.I., Polonisik, S., and Wilson, C.D., "Muskegon Sprays Sewage Effluents on Land." *Civil Engineering* (May 1973).

88. Parizel, R.R., Kardos, L.T., Sopper, W.E., Myers, E.A., Davis, D.E., Farrel, M.A., and Nesbitt, J.B., *Wastewater Renovation and Conservation.* Administrative Committee on Research, Pennsylvania: Penn State University (1967).

89. Kardoz, L.T., et al., *Renovation of Secondary Effluent for Reuse as a Water Resource.* Superintendent of Documents, U.S. Government Printing Office, Washington, D.C. (1974).

90. Bouwer, H., Rice, R.C., Escaruga, E.D., and Riggo, M.S., *Renovating Secondary Sewage by Ground Water Recharge with Infiltration Basins.* U.S. EPA, WPC research series 16060 DRV 03/72, Washington, D.C. (March 1972).

91. Lawrence, A.W., *Design of Wastewater Treatment Systems to Satisfy Effluent Quality Requirements based on Intended Use.* Ithaca: Cornell University (September 1971).

92. *Process Design Manual for Upgrading Existing Wastewater Treatment Plants.* U.S. EPA, Office of Technology Transfer, EPA-625/1-71-004a (1974).

93. *Upgrading Existing Wastewater Treatment Plants, Case Histories.* U.S. EPA Technology Transfer Seminar Publication, EPA-625/4-73-005a (August 1973).

94. *Upgrading Existing Wastewater Treatment Plants.* Presented at U.S. EPA Technology Transfer Design Seminar (August 1972).

95. Lewis, R.F., and Smith, J.M., *Upgrading Existing Lagoons.* U.S. EPA, Office of Research and Development (October 1973).

96. *Upgrading Lagoons.* U.S. EPA Technology Transfer Seminar Publication, EPA-625/4-73-001a (August 1973).

97. Thumann, A., and Miller, R.K., *Secrets of Noise Control.* Atlanta: Fairmont Press (1974).

98. *Sludge and Process Liquid Sidestreams at Wastewater Treatment Works.* Camp Dresser & McKee, U.S. EPA background report (1974).

99. *Municipal Wastewater Treatment Plant Sludge and Liquid Sidestreams.* Camp Dresser & McKee, U.S. EPA Technical Bulletin (1974).

100. *Design Criteria for Mechanical, Electric, and Fluid System and Component Reliability.* U.S. EPA Technical Bulletin, EPA-430-99-74-001 (1973).

CHAPTER 3

HYDRAULIC CONSIDERATIONS

3.1 Introduction

Hydraulic theories must be properly applied during the design phase of a wastewater plant, to insure that the plant functions satisfactorily. Hydraulics must be considered in designing pumps, valves, flow measuring devices, and equipment controls, as well as pipes, channels, and basins. Hydraulic flow characteristics must be determined for all critical combinations of flows into conduits, channels, and basins. This chapter discusses hydraulic criteria relevant to the design of small wastewater treatment plants.

3.2 Flow Considerations

3.2.1 Limiting Velocities

Velocity of flow and turbulence affect the efficiency and reliability of hydraulic controls, pumping, valving, fluid measuring devices, and various processes. Some considerations influencing the hydraulic design of these items are discussed below.

Conduits carrying wastewater with grit and settleable organic solids should be designed, if possible, to have a scouring velocity at least once a day. Peak velocities, at the beginning and end of the design period, should be considered in selecting the design scouring velocity. Scouring velocity depends on the density and other characteristics of the wastewater and the grit. Scouring velocities vary from 1.5 to 4 ft/sec (0.45 to 1.20 m/s); 3 ft/sec (0.9 m/s) is usually satisfactory. If horizontal velocities are less than about 2.0 ft/sec (0.6 m/s), grit will settle.

If floc is to be kept in suspension, the horizontal velocity at the bottom of the basin or tank should exceed 20 ft/min (0.10 m/s) (1). Therefore, a design bottom velocity of about 30 ft/min (0.15 m/s) should be used to keep organic solids in suspension. In the initial stages of plant operation, when minimum velocities may become less than 30 ft/min, scouring velocities of 1.5 to 2.0 ft/sec (about 0.45 to 0.60 m/s) must be scheduled for about 1 hr daily to scour sludge deposits.

Head losses from friction and obstructions in a conduit are approximately proportional to the square of the velocity. If pumping is required, the maximum head loss used for design should be determined by cost-effectiveness studies, considering energy, equipment, and effects on processes. Upper limiting velocities should be established in designing specific plant piping, to prevent possible erosion of, or damage to, conduits or their linings. This maximum velocity (which can vary for specific conditions) should range from about 5 to 12 ft/sec (1.5 to 3.6 m/s). Supercritical velocities should be avoided.

3.2.2 Flow Division

Equal hydraulic division of flow does not necessarily divide the organic load equally. Unless the SS are homogeneously dispersed throughout the liquid and the relative momentum of all particles is approximately equal at the point of flow division, the SS will usually divide unequally. Some turbulence is desirable at each point of diversion, to achieve sufficient homogeneity.

In general, flow will split equally if 1) there is a sufficiently large head loss through the control, compared to the differences in head loss available, and 2) there is an equality of head loss across the weir, if weirs are used. If the head loss constraint cannot be met, symmetry of layout tends to achieve the same purpose.

Figure 3-1 shows several methods of obtaining equal flow division. The velocity through an orifice or other pressure control device varies as the fractional power of the head. A small percentage of difference in head losses through the device still results in relatively equalized velocities of fluids entering several channels (or chambers) from one channel (or chamber). The required head loss for a stipulated deviation in flow—such as where the flow varies as the square root of the head (e.g., through orifices)—can be determined from the following equation (2):

$$h_O = (\Sigma \Delta h)/(1 - m^2)$$

where

h_O = head loss through the outlets in which the available head is greatest (the head loss is usually based on equal flow split)

$\Sigma \Delta h$ = greatest difference in head (piezometric head or water surface elevation) available for dividing the specified flow

m = minimum permissible ratio of discharge rates through the outlets, determined from the ratio of minimum to maximum divided flow

In considering the flow dividing structure shown in Figure 3-1 (III), assume that friction losses in the influent distribution channel upstream from the four tanks are negligible, compared to the velocity head. Assuming that the plant flow is to be equally split, with a deviation of no more than 5 percent, the value of "m" is (100 – 5)/100, or 0.95. Flow is assumed to enter each tank through two submerged ports with a discharge coefficient of 0.6. If the velocity in the distribution channel is to be about 1 ft/sec (0.3 m/s), Δh would then be the last velocity head when the water changed direction ($90° \times \Delta h = v^2/2g = 1/64.4 = 0.016$ ft). The head loss (h_O) that must occur at each port would be $h_O = \Delta h/(1 - m^2)$, or $h_O = 0.016/(1 - 0.95^2) = 0.164$ ft. The size of the port can thus be determined from the equation for head loss through an orifice:

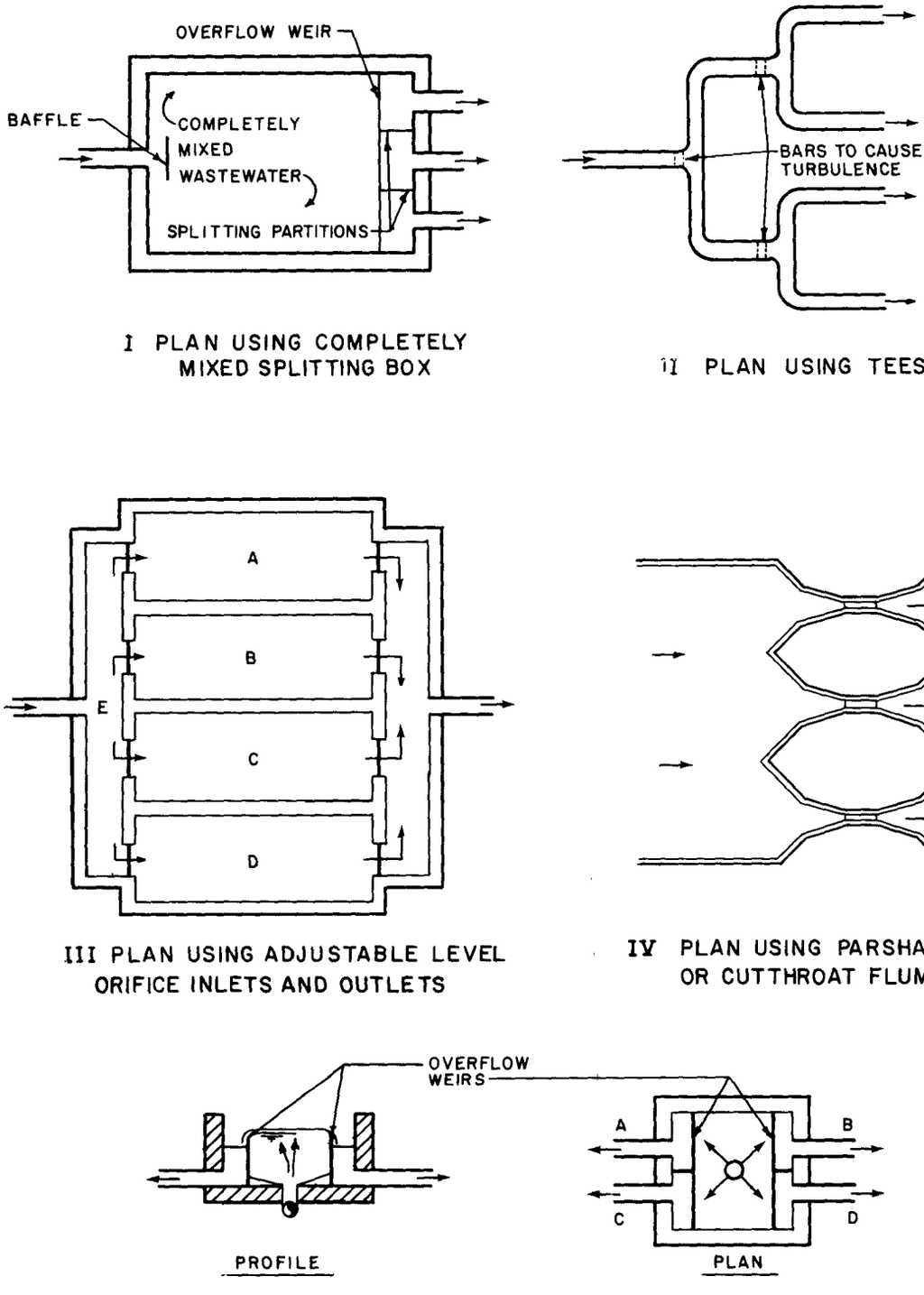

FIGURE 3-1

METHODS OF WASTEWATER FLOW DIVISION

$h_O = (Q/0.6\ A)^2/2\ g$

$A = [Q^2/(h_O)(2g)(0.6)^2]^{0.5}$

$A = [0.1^2/(0.164)\ (64.4)\ (0.36)]^{0.5}$

$A = 0.0513\ ft^2$

$D = (4A/\pi)^{0.5}\ (12\ in./ft) = 3.068\ in.$

where

A = area

D = diameter

Five of the more common methods for uniformly dividing flows and organic loadings are shown in Figure 3-1. Short discussions of these methods follow. (It is assumed in each case that grit separation has taken place before flow division.)

Plan I. If the fluid is completely mixed when divided, the suspended solids load in each part of the flow will be proportional to the volume. Several methods are used to obtain complete mixing (i.e., to attain a minimum velocity of about 0.5 ft/sec [0.15 m/s]): mechanical mixers, diffused aeration, jets of recirculated effluent, and various combinations of these methods. V-notch weirs, rectangular weirs, or orifices may be used to separate the flows uniformly from a completely mixed body of water.

Plan II. When a flow is divided, there will normally be more suspended solids in the portions having the more distinct change of direction. For example, if flows are split from one channel into three parallel channels, the two outer channels will contain more solids (if the mixing was not complete). If flows are divided using a series of tees, the upstream bends will create centrifugal forces that affect the path the solids take downstream. To create a sufficient increase in velocity to obtain the needed turbulence and mixing and thus insure maximum homogeneity at the point of division, bar racks or posts can be placed in the channel upstream of the 90° bends. If pipes, tees, or wyes are used for the division of settled flows, bars can be placed at the upstream joint of the tee or wye, to cause the required mixing before division. If a straight section of conduit 6 to 8 diameters (or channel widths) long can be located upstream of the divider, effects of centrifugal forces will be well damped and will allow a division of solids more nearly proportional to the subdivided flows.

Plan III. If flows are split from a channel at points not equidistant from the entrance flow, the hydraulic head at successive points along the channel will be different, depending on the velocity heads and friction losses. Reference (2) contains detailed analyses of this problem. To obtain a relatively even split of flows, the equation $h_O = (\Sigma\Delta h)/(1 - m^2)$ applies. Here, also, an equal split of suspended material requires sufficient mixing in the dispersion conduit, to obtain a relatively homogeneous solids dispersion.

Plan IV. If a relatively uniform head is available across a channel (i.e., no nearby upstream changes in direction), with approach velocities of less than about 2 to 3 ft/sec (0.6 to 0.9 m/s), Parshall or cut-throat flumes may be used to divide the flows equally. The design of such flumes is given in references (3), (4), (5), (6), (7), (8), and (9). Every effort should be made to insure a relatively homogeneous mixture before division.

Plan V. A simple method of obtaining good mixing (ideal for small plants) is use of a bottom entrance to the splitting box. The flow enters the box in the middle and can be split most accurately there, with flows at 90° to the center line of the inverted siphon, or at the sides of the box. The entrance velocities should be kept relatively low with respect to the depth of the splitting box, to prevent excessive surface turbulence and resultant variations of head at the flow control device. Weirs, or orifices with sufficient head loss, can be used to divide the flows satisfactorily. For works built in two stages, flows from A and B can be used for one stage and from C and D for the other stage. With an odd number of divisions, a round splitting box is simpler.

3.2.3 Plant Hydraulic Gradient

Hydraulic gradient diagrams of the main stream and all sidestream flows at the treatment plant should be prepared, to insure that adequate provision is made for all head losses.

Because cost and availability of energy are significant factors in the operation of a plant, the design allowances for the head loss of each unit, as well as through the entire plant, from the entrance through the outfall, must be carefully considered, particularly if pumping is required. Unnecessary head allowances increase the cost of pumping; insufficient allowances make operation difficult and expansion costly.

Bernoulli's theorem (basic to hydraulic system design) states that, under conditions of steady flow, the sum of the velocity head, pressure head, and head from elevation at any point along a conduit or channel is equal to the sum of these same heads at any other downstream point plus the losses in head between two points resulting from friction or turbulence. A line representing only the sum of the pressure head and the elevation head at a number of points in a system represents the hydraulic grade line or equivalent free water surface. In wastewater treatment plant designs, the hydraulic grade line (or free water surface only) is usually shown. Although the total energy grade line is frequently not shown, it should always be calculated to obtain a more accurate representation of the changes in water surface elevation. References (3), (5), (6), (10), (11), and (12) discuss this in more detail.

Energy changes usually requiring consideration in developing hydraulic profiles include the following:

1. Head losses from wall friction in conduits.
2. Head losses caused by sudden enlargement of flow, such as flows into tanks and larger conduits; sudden contractions, such as at entrances, orifices, inlets, weirs,

and flumes; sudden changes in direction, such as bends, elbows, and tees; sudden changes in slope or drops, such as after weirs and flumes; and possible obstructions because of deposits in a conduit.

3. Heads required to allow discharges over weirs and through flumes, orifices, and other measuring, controlling, or flow division devices.
4. Head gains or losses from momentum changes.
5. Head allowances for expansion of facilities, to meet future requirements.
6. Head allowances for maximum water levels in the receiving waters, to prevent backup of flow in the outfall, if that might cause difficulty.
7. Head allowances for unusual restrictions in the downstream flow, which could back up the wastewater stream and submerge measuring or control devices.
8. Head gained by pumping.
9. Head requirements for flow through comminutors, bar screens, fine screens, mixing tanks, equalizations tanks, flocculation tanks, clarifiers, aeration tanks, filters, carbon contactors, ion exchangers, chlorine contactors, ozone contactors, and all other treatment processes.
10. Head losses that may result if air causes bulking, or escapes from the wastewater to form air pockets, thus restricting flow.
11. Combined momentum and side-wall energy losses in a conduit, if the flow is split along the side of the conduit (two-thirds of the head required may be needed to provide the changes in momentum).

In addition to the average design flow grade line, the designer should prepare grade lines for minimum flows at the time of startup and peak flows at the end of the design period.

Hydraulic profiles serve as a very useful tool for insuring that all pertinent head losses are accounted for and that the plant can satisfactorily function hydraulically, both now and in the future. Hydraulic profiles should also be prepared for all feasible alternative designs.

Figures 3-2, 3-3, 3-4, and 3-5 show typical hydraulic profiles for small wastewater treatment plants. Figure 3-2 illustrates units that may be required in a later stage of construction in developing a hydraulic gradient to upgrade an existing primary plant. Figure 3-3 shows the hydraulic gradient of a small plant on a site where the flow can be maintained by gravity. This plant is designed to meet variations in flow while reliably producing a properly treated effluent. Figure 3-4 shows structures that cross the principal stream of flow and create a need for bends, causing additional head losses.

This plant was expanded once and is currently undergoing a second expansion and upgrading. Note that provisions are made for energy dissipation and reaeration when the stream flow is average. Because two pumping stations are involved, there are significant head losses to consider in addition to the static head, to obtain the dynamic head requirements for the pumps. Figure 3-5 shows a typical small secondary treatment plant located in a flat area near a stream. Pumping required before treatment provides sufficient head for gravity flow through the plant.

References (5) and (12) contain detailed discussions of the various types of head losses and how they are calculated. References (3), (4), (6), (9), (10), (11), (13), and (14) also contain detailed information on head losses.

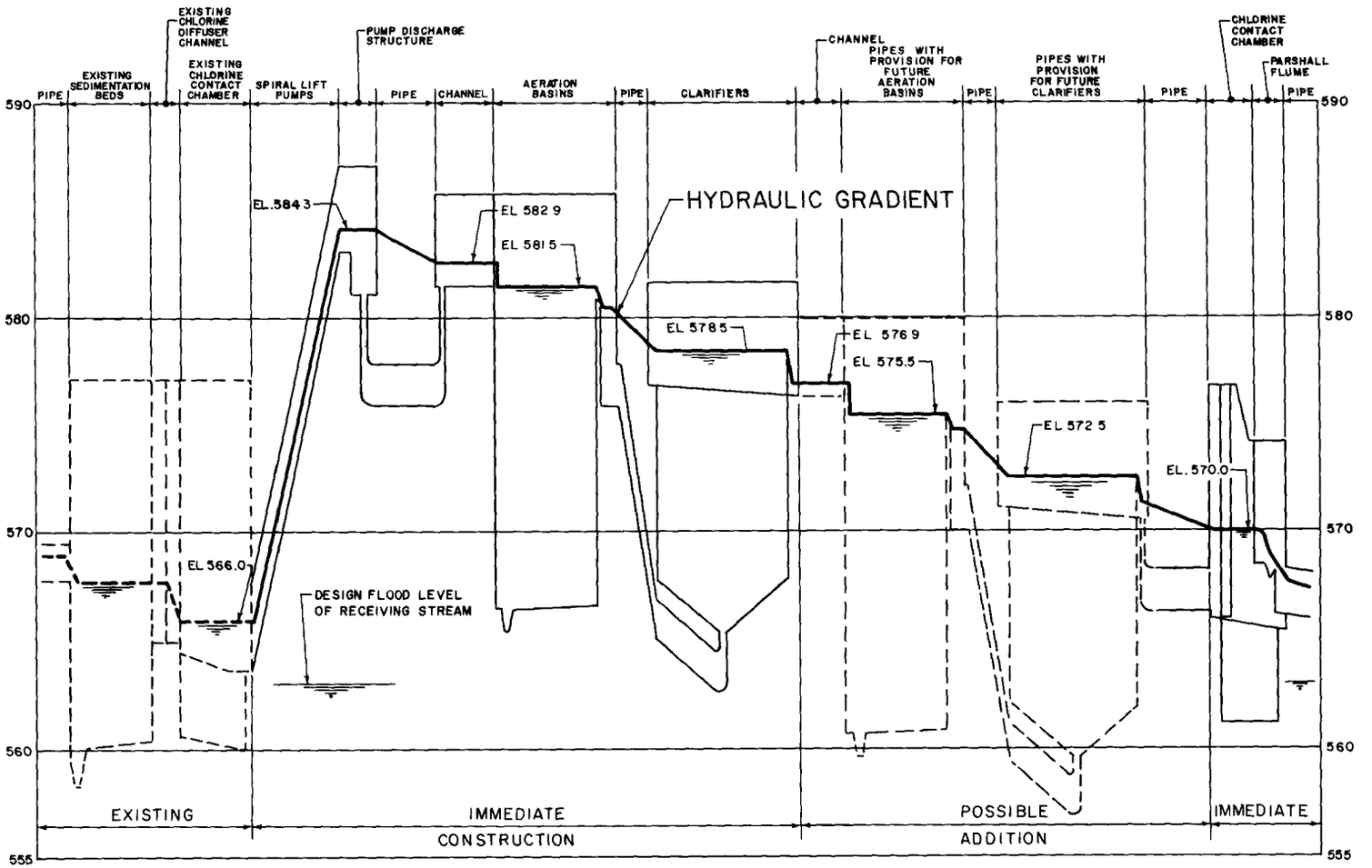

FIGURE 3-2

HYDRAULIC GRADIENT—WASTEWATER TREATMENT PLANT
WITH PROVISION FOR FUTURE UPGRADING

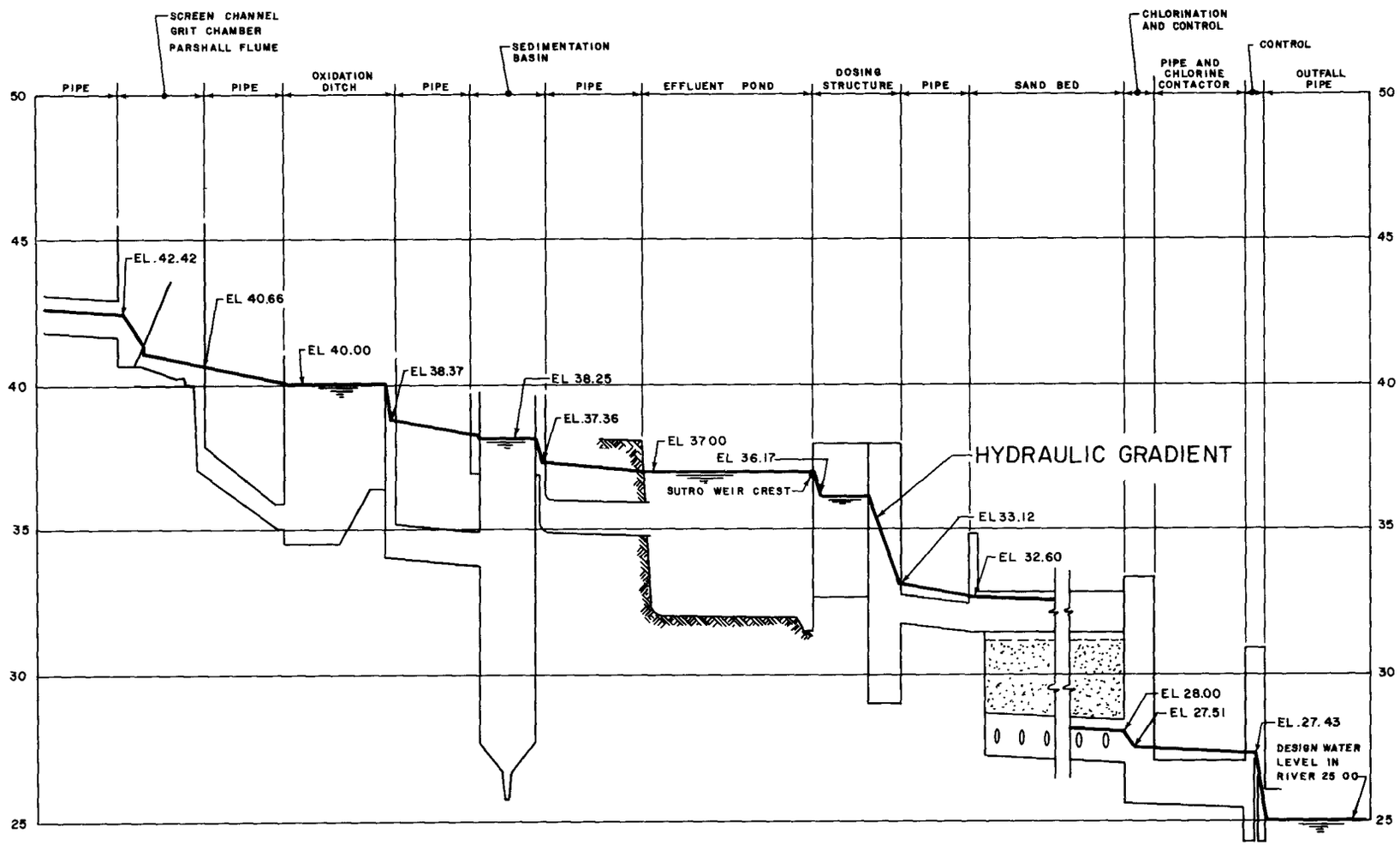

FIGURE 3-3

HYDRAULIC GRADIENT–WASTEWATER TREATMENT PLANT

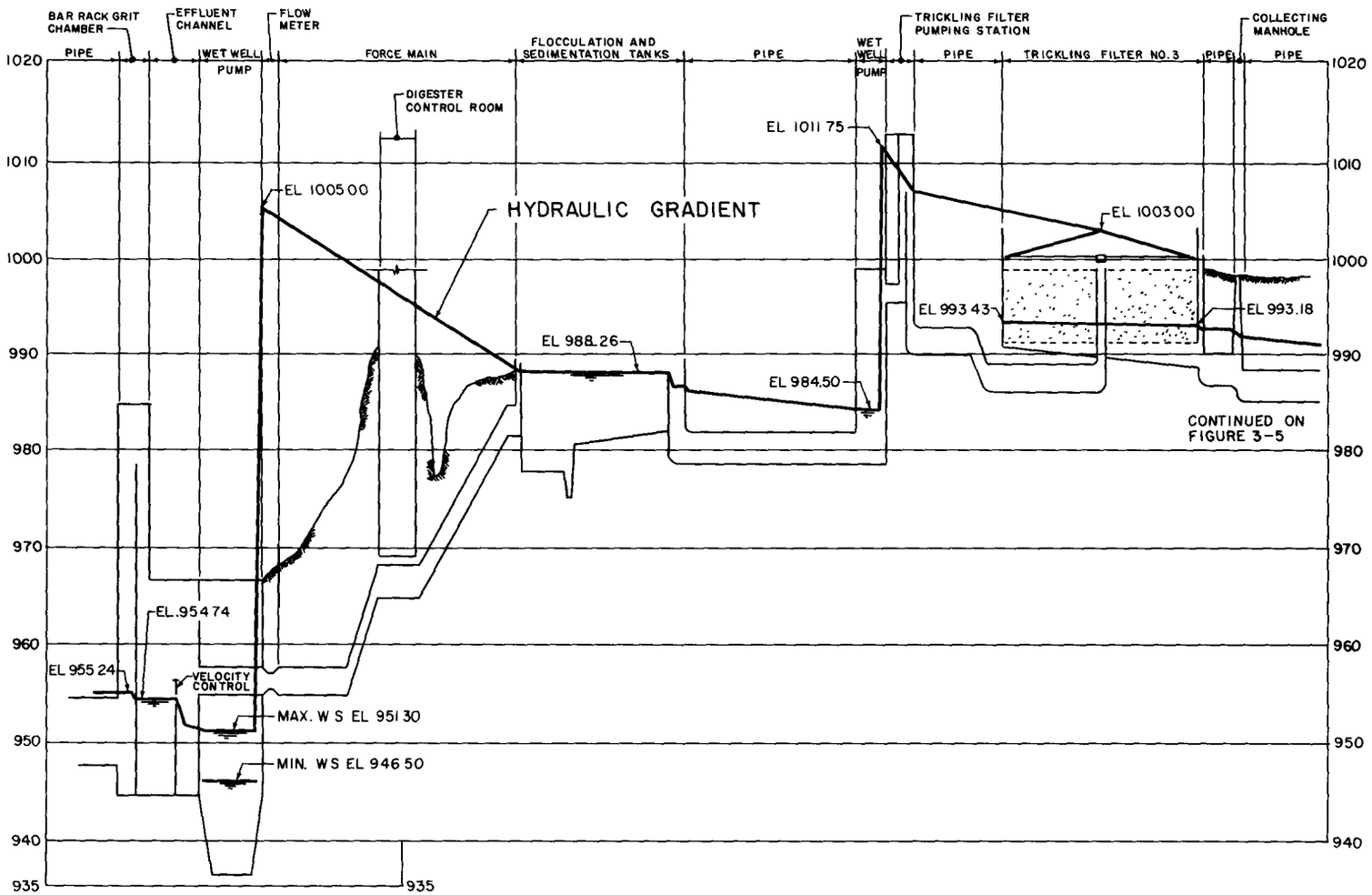

FIGURE 3-4

HYDRAULIC GRADIENT—WASTEWATER TREATMENT PLANT

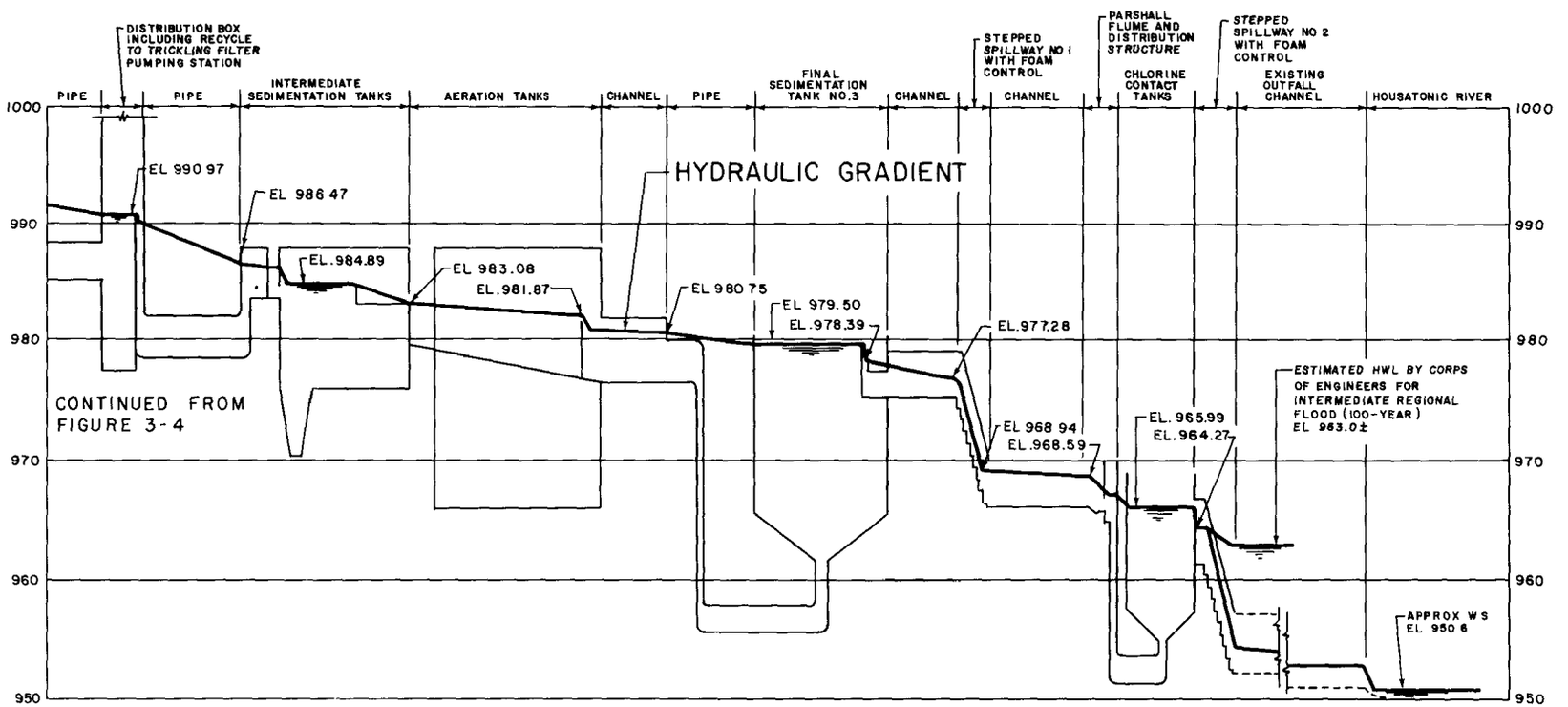

FIGURE 3-4 (continued)

HYDRAULIC GRADIENT—WASTEWATER TREATMENT PLANT

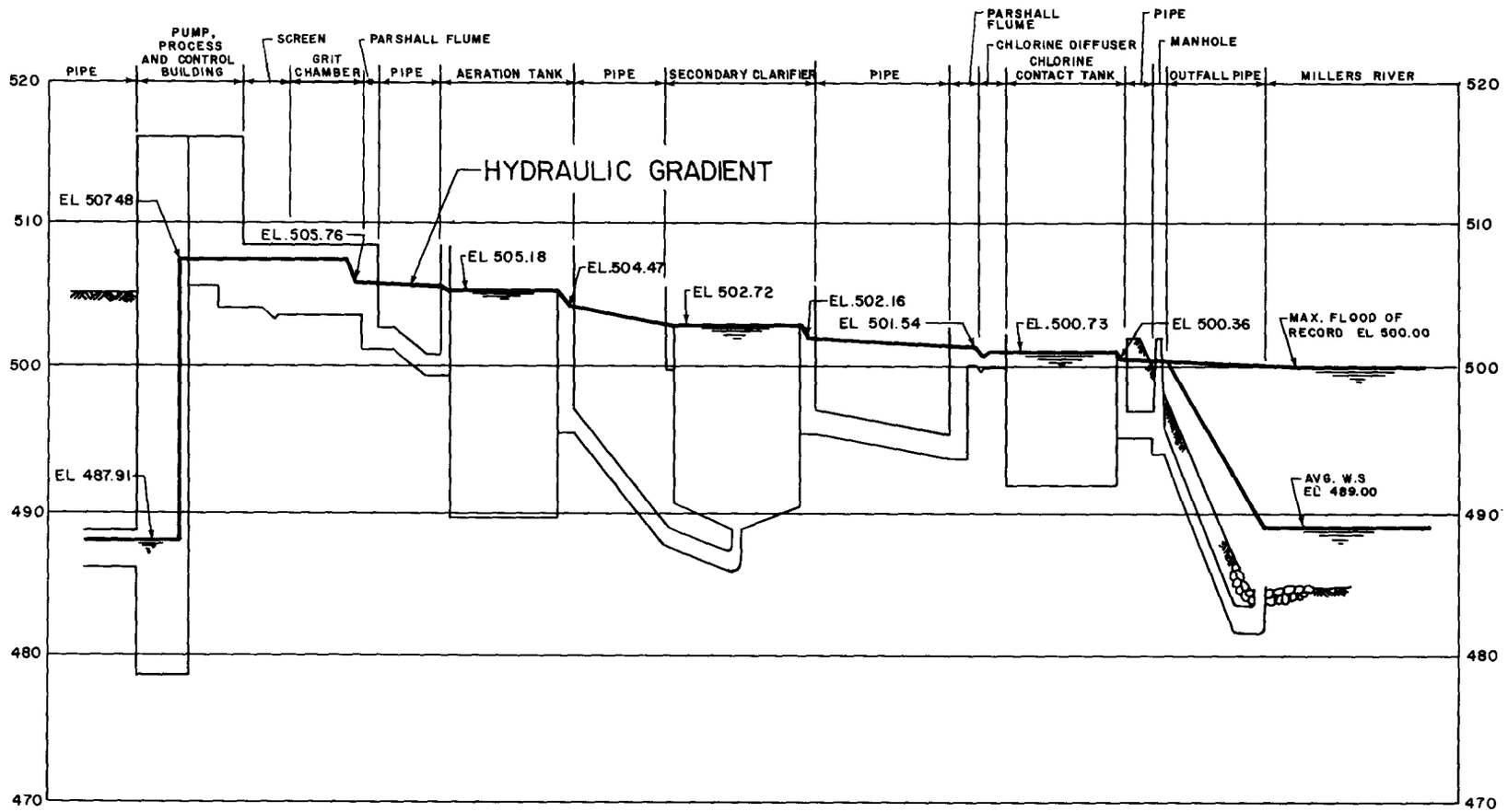

FIGURE 3-5

HYDRAULIC GRADIENT–WASTEWATER TREATMENT PLANT

3.2.4 Sludge Flow Hydraulics

The flow characteristics of sludges vary according to the types and concentrations of organic solids and chemicals, Some sludges have flow characteristics similar to clear water; others have pseudoplastic flow characteristics. Many sludges are thixotropic in nature; that is, their viscosity increases with time if in a static state, but on agitation returns to its original value.

The flow of sludges with lower solids contents and viscosities close to that of water may be calculated, using turbulent-flow friction losses in common hydraulic formulas. Return activated sludge and sludge from intermediate or final clarifiers generally have waterlike flow characteristics. Sludges from primary clarifiers, scum thickeners, holding tanks, and digesters have pseudoplastic or thixotropic characteristics.

If pseudoplastic type sludges are to be pumped long distances, velocities must be kept in the laminar flow ranges, to keep the head losses down. Reference (15) contains design details on this type of flow.

In wastewater treatment plants, sludge flows are normally intermittent. Thus, to scour any solids that separate during periods of quiescence, sludge velocities of 3 to 5 ft/sec (0.9 to 1.5 m/s), or higher for more waterlike sludges, should be kept. For heavier sludges and grease, velocities of 5 to 8 ft/sec (1.5 to 2.4 m/s) are needed. Because all sludge piping must pass 3-in. (75 mm) solids and must be at least 4 in. (100 mm) in diameter to pass the solids and permit cleaning, the flow invariably will be in the turbulent rather than the laminar range (provided the drawoff rate is sufficient). Therefore, once sludge flow has started, formulas for turbulent flow of fluids can be used. If the Hazen-Williams formula is used, C factors (dependent on conduit roughness) from 60 to 90 may be used (20 to 40 percent less than for wastewaters).

To prevent disruption of treatment processes, provisions must be made in all sludge conduits for cleanouts, vent pipes, taps for steam or hot water, and access for mechanical cleaning. Pumps, if at all possible, should have a positive suction head of at lest 3 ft (0.9 m) or higher (particularly for reciprocating pumps), plus head losses in the suction line. Standby sludge pumps must be provided (15).

3.3 Pumping

References (3), (5), (6), (10), (11), (13), (14), and (16) and the catalogs and data issued by pump manufacturers contain a wealth of detail for design procedures. Current technical publications regularly contain discussions of some aspect of pumping.

Because wastewater flowing into a plant continues—although pumps may stop—spare pumps, spare power sources, screening, overflow pond storage, etc., which will automatically begin functioning when a unit stops, must be provided. Reliable, efficient pumping with standby equipment should be incorporated in the design of the system (15).

3.3.1 Types of Wastewater and Sludge Pumps

Types of pumps available for use at wastewater facilities for various needs are listed in Table 3-1. The pumping system selected must be able to meet the varying head conditions caused by differences in free water level in the wet well and the receiving body of water, plus all the head losses in the conduit. Head losses in the conduit, which depend on flow variations throughout the life of the pumping system, include wall friction and losses at entrances, outlets, valves, measuring devices, elbows, bends, tees, reducers, and any other location or cross-sectional area where the flow changes direction. Whenever two or more pumps will be transferring liquid from a single source into a common conduit, head curves for all combinations of pumps in the pumping system must be developed to determine a program that will meet all head flow combinations.

A process for selecting the best pump for handling raw wastewater is described in references (12) and (17).

3.3.2 Pump Drive Equipment

Directly connected electric motors are commonly used to drive pumps at small wastewater treatment plants. If two independent sources of electrical power are unavailable (as is usually the case), internal combustion engines that burn diesel oil, gasoline, propane, or methane may be used to provide standby electrical generation capacity or direct power for pumps (15).

Squirrel cage motors are most commonly used in small plants, because of their low cost, reliability, and ruggedness. They can be used if the pumping operation is continuous and the loads uniform. Auxiliary control or special windings are advised if operation is intermittent or the load fluctuates, to provide better starting conditions. Wound rotor motors are generally used for variable speed operation. High-speed motors with reduction gears are used to operate valves, gates, screens, mixers, flocculators, and other slow-speed equipment.

Factors to be considered in comparing alternative drives include energy usage, reliability, simplicity of operation and maintenance, ruggedness, and cost of each type of drive meeting the pertinent conditions (variability of flow, head, and available power). Characteristics to be determined by the engineer for each drive are type of motor or engine; horsepower (kW); electric current, voltage frequency and phases; starting torque, voltage, and current; speed; speed reducer requirements; alternative drive requirements; overload, underload, overvoltage, undervoltage, and other required motor protection devices; type of bearings, insulation, and ventilation; noise reduction; mounting or setting; fire-proof and safe fuel supply; and means of simple replacement or overhaul on site. The details on this subject can be found in references (3), (5), (10), (11), and (12) and from manufacturers of drive equipment.

TABLE 3-1

PUMPING ALTERNATIVES FOR VARIOUS TREATMENT PLANT NEEDS

Pump Type	Description	May Be Used For
Air Lift	Used for lifting liquid from wet wells or basins. Air under pressure is introduced into the liquid to reduce apparent specific gravity of the air/liquid mixture and thus cause it to rise to the discharge outlet.	Secondary Sludge Recirculation and Wasting
Centrifugal	Consists of an impeller fixed on a rotating shaft and enclosed in a casing with an inlet and discharge connection. The rotating impeller creates pressure in the liquid by the velocity created by the centrifugal force. Pump is commonly classified according to impeller as radial, mixed flow, or axial.	Raw Wastewater Secondary Sludge Recirculation and Wasting Settled Primary and Secondary Effluent
Diaphragm	Uses a flexible diaphragm or disk, generally made of rubber, metal, or composition material, fastened at the edges of a cylinder. When the disk is moved at its center by a piston in one direction, suction is created and liquid enters from the suction line. When the disk is moved in the other direction, pressure forces the liquid out the discharge line. Check valves are required on both suction and discharge lines.	Chemical Solution
Plunger	A reciprocating pump with a plunger which does not contact the cylinder walls, but enters the cylinder and withdraws through packing glands, thus alternating suction and pressure.	Primary Sludge Skimmings Secondary Sludge Recirculation and Wasting Thickened Sludge Chemical Solution
Progressive Capacity	Positive displacement, screw type pump that uses a single-threaded rotor, operating with a minimum of clearance in a double-threaded helix of soft or hard rubber or other material.	Skimmings Thickened Sludge Chemical Solution
Screw	Uses a spiral screw operating in an open inclined trough.	Raw Wastewater Settled Primary and Secondary Effluent Grit
Torque-flow	Uses rotating-inducing element, which is entirely out of the flow path of the liquid through the pump.	Raw Wastewater Primary Sludge Secondary Sludge Recirculation and Wasting Thickened Sludge
Vertical Turbine	A centrifugal pump, which uses a pump shaft in a vertical position.	Settled Primary and Secondary Effluent

3.4 References

1. Camp, T.R., "Outstanding Papers." *Civil Engineering Classics,* ASCE (1973).

2. Camp, T.R., and Graber, S.D., "Dispersion Conduits." *Journal of the Sanitary Engineering Division,* ASCE (February 1968).

3. Babitt, H.E., and Baumann, E.R., *Sewerage and Sewage Treatment.* New York: John Wiley & Sons (1967).

4. Chow, V.T., *Open Channel Hydraulics.* New York: McGraw-Hill (1959).

5. Davis, C.V., and Sorensen, K.E., *Handbook of Applied Hydraulics.* New York: McGraw- Hill (1969).

6. King, H.W. (O. Wisler Co.), and Woodburn, J.G., *Hydraulics.* New York: John Wiley & Sons (1948).

7. *Fluid Meters: Their Theory and Application.* ASME Research Committee on Fluid Meters (1971).

8. *Handbook for Monitoring Industrial Wastewater.* U.S. EPA, Office of Technology Transfer, EPA-625/6-71-002 (1971).

9. *Water Measurement Manual,* 2nd ed. U.S. Bureau of Reclamation, Denver (1967).

10. "Wastewater Treatment Plant Design." ASCE Manual of Practice No. 36 and WPCF Manual of Practice No. 38 (1959).

11. *Wastewater Engineering.* Metcalf & Eddy, New York: McGraw-Hill (1972).

12. "Design and Construction of Sanitary Storm Sewers." ASCE Manual of Practice No. 37 and WPCF Manual of Practice No. 9 (1960).

13. Rouse, H., *Elementary Mechanics of Fluids.* New York: John Wiley & Sons (1946).

14. _____, *Advanced Mechanics of Fluids.* New York: John Wiley & Sons (1959).

15. *Design Criteria on Mechanical, Electric, and Fluid System and Component Reliability.* U.S. EPA 430-99-74-001, Office of Water Program Operations (1974).

16. *Recommended Standards for Sewage Works.* Great Lakes-Upper Mississippi River Board of State Sanitary Engineers (1973).

17. *Hydraulic Institute Standards.* Hydraulic Institute, New York (1964).

CHAPTER 4

FLOW EQUALIZATION

4.1 Introduction

Equalization of fluctuating wastewater flows will make hydraulic pollutant loadings more uniform and may improve the effectivenéss or reliability of essential treatment processes. Equalization can, therefore, be a valuable technique in the upgrading of existing facilities and should be considered a feasible design alternative for new treatment facilities. If the system experiences large, erratic discharges of industrial wastes, equalization may be easily justified.

Storing above-average flow in a basin, pond, tank, or conduit (a less desirable alternative) for uniform release to treatment processes during periods of below-average flow will achieve equalization. A detailed discussion of flow equalization for large municipal facilities can be found in the *Process Design Manual for Upgrading Existing Wastewater Treatment Plants* (1). This chapter discusses the criteria for the design of equalization facilities for small wastewater treatment plants.

4.2 Variations in Wastewater Flow

The daily wastewater flow from a small community usually varies more in quality and quantity than does the flow from larger communities. (Details of variations are presented in Chapter 2). Hydraulically, the major portion of flow from a small community occurs during the daylight hours, with minimal domestic wastewater flow from 2 a.m. to 6 a.m. Two or three peak flows during the day and one minimum flow at night may occur. For some treatment processes to operate and use space most efficiently, the influent flow should be kept relatively consistent in rate and concentration of constitutents.

In smaller communities, quality control during the construction of household piping, service connections, and sewer installations is often inadequate, resulting in infiltration and stormwater inflow. Ground water may infiltrate sewers if the water table rises above the pipes at any time, thereby doubling or tripling the average flow during that period (as long as several months in some locations). Although stormwater inflow may be for a shorter period, it may keep the collection system full for up to a week at a time. Stormwater inflow results largely from 1) roof, cellar, or footing drains connected to the sanitary sewer; 2) stormwater quickly reaching gravel pipe bedding and then entering the sewers through leaky joints; and 3) inflow through faulty manhole construction. Stormwater inflows may temporarily dilute and modify the concentrations of the pollutants in the raw wastewater. It may, under some circumstances, be feasible and cost-effective to provide some capacity in the equalization unit, to modify some of the effects of stormwater inflows. It is seldom (if ever) worthwhile, however, to provide sufficient capacity for equalization of large flows resulting from seasonal ground water infiltration.

Irregular wastewater discharges can be expected from schools and small industries (dairies, canneries, tanneries, etc.), which often have high flows for limited periods during weekdays and minimal flows during nights, weekends, holidays, or vacations. Resort or tourist businesses usually discharge wastes more heavily on weekends, holidays, and during vacation periods.

In smaller communities, the concentration of the various polluting constituents can vary considerably by the hour, day, season, and year. As shown on Figure 4-1, the BOD of domestic wastewater usually is somewhat proportional to flow. If the flow contains significant portions of nonresidential wastewater, these variations in concentration will seldom follow the patterns of the hydraulic flow variations.

Small durations of high concentrations of toxic material, caused by a spill, will "poison" a biological process. Normally biodegradable substances, if highly concentrated, may inhibit a biological process. Equalization lessens the adverse impact of such shock loadings.

A common problem at small treatment plants is the intermittent dumping of septic tank pumpage (septage) collected from nearby unsewered homes and communities. It is good design practice to provide a specially designed receiving facility to equalize or treat septage prior to its introduction to the treatment facility. Small industries commonly discharge certain process wastewaters on an intermittent basis in batches that are often trucked to the treatment plant for disposal. If these concentrated discharges are compatible with the treatment processes, they may be mixed in an equalization tank with the domestic wastes and fed to the treatment processes uniformly. However, these discharges, along with chemical toilet collections, are often quite toxic to the treatment facility and require separate treatment by chemicals, etc., to prevent serious upsets in treatment plant operations.

The large number of factors causing variability of flow and strength of wastewater makes it particularly important, in analyzing the feasibility of equalization, to gage and sample existing wastewater flows. The gaging and sampling should take place during periods of dry weather when the ground water surface is below the sewers and during periods of high ground water and rainstorm runoff, to determine the effects of each on the flow rates and wastewater constituents.

A reasonable 24-hr wastewater flow curve must be developed as a basis for the design. This diurnal flow curve should consider the existing variations in daily, seasonal, and annual 24-hr flow and the probable increases in flow throughout the design period. In general, the 24-hr curve showing the largest variation ratios should be used for the expected design flows. A typical diurnal flow curve is shown in Figure 4-1.

4.3 Benefits of Dry-Weather Flow Equalization

Flow equalization has a positive impact on all treatment processes, from primary treatment to advanced waste treatment.

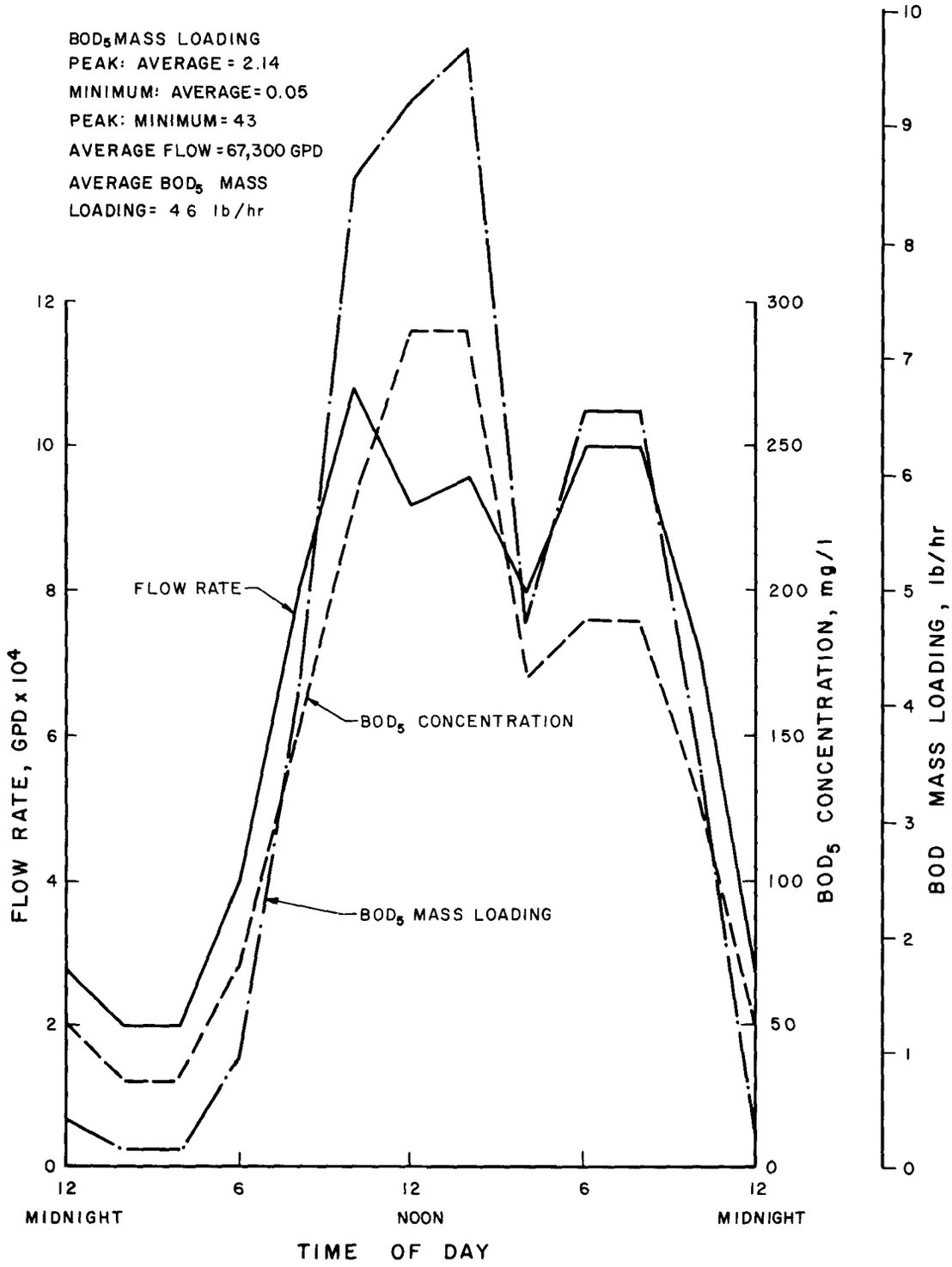

FIGURE 4-1

TYPICAL DRY WEATHER FLOW AND BOD VARIATION
OF MUNICIPAL WASTEWATER BEFORE EQUALIZATION

4.3.1 Impact on Primary Settling

The most beneficial impact on primary settling is the reduction of peak overflow rates, resulting in improved performance and a more uniform primary effluent quality. Flow equalization permits the sizing of new clarifiers on the basis of equalized flow rates rather than peak rates. In an existing primary clarifier that is hydraulically overloaded during periods of peak diurnal flow, equalization can reduce the maximum overflow rate to an acceptable level. A constant influent feed rate also prevents hydraulic disruptions created by sudden flow changes in the clarifier--particularly those caused by additional wastewater lift pumps suddenly coming online.

LaGrega and Keenan (2) investigated the effect of flow equalization at the 1.8-mgd wastewater treatment plant in Newark, New York. An existing aeration tank was temporarily converted to an equalization basin, and the performances of primary settling under marginal operating conditions, with and without equalization, were compared. The results are shown in Table 4-1.

TABLE 4-1

EFFECT OF FLOW EQUALIZATION ON PRIMARY SETTLING
NEWARK, NEW YORK

	Normal Flow	Equalized Flow
Primary Influent SS, mg/l	136.7	128.0
Primary Effluent SS, mg/l	105.4	68.0
SS Removal in Primaries, percent	23	47

Note: Average flow slightly higher in unequalized portion of study.

It has been demonstrated (3) (4) that preaeration can significantly improve primary settling, as discussed in Chapter 8. Roe (3) concluded that preaeration preflocculates suspended solids, thereby improving settling characteristics. This benefit may be realized by aerated equalization basins; however, it may be diminished if the equalized flow is centrifugally pumped to the primary clarifier, because of the shearing of the floc.

If recirculation is limited or nonexistent, trickling filter media may dry out and the biota activity may be reduced, thus reducing treatment efficiency. Equalization may be beneficial if recirculation ratios above 4 to 1 are needed.

The detention time in the contact tank of a contact-stabilization type of activated sludge plant should be between 25 and 40 minutes for the process to achieve its best efficiency. Flow equalization may be necessary in maintaining control of this detention period in small plants, if flow variations are excessive.

4.3.2 Impact on Biological Treatment

In contrast to primary treatment or other mainly physical processes in which concentration damping is of minor benefit, biological treatment performance can benefit significantly from concentration fluctuation damping and flow smoothing. Concentration fluctuation damping can protect biological processes from upset or failure from shock loadings of toxic or treatment-inhibiting substances. Inline equalization basins are, therefore, preferred to sideline basins for biological treatment applications.

Improvement in effluent quality because of stabilized mass loading of BOD on biological systems treating normal domestic wastes has not been adequately demonstrated to date. The effect is expected to be significant if diurnal fluctuations in organic mass loadings are extreme; that is, at a wastewater treatment plant receiving a high strength industrial flow of short duration. Damping of flow and mass loading will also improve aeration tank performance, if aeration equipment is marginal or inadequate in satisfying peak diurnal loading oxygen demands (5).

The optimum pH for bacterial growth is between 6.5 and 7.5. Inline flow equalization can be effective in maintaining a stabilized pH within this range.

Flow smoothing can be expected to improve final settling more than primary settling. In the activated sludge process, flow equalization will also stabilize the solids loading on the final clarifier. For a given size clarifier, this means:

1. The MLSS concentration can be increased, thereby decreasing the F/M and increasing the SRT. This may result in an increased level of nitrification and a decrease in biological sludge production. It may also improve the performance of a system operating at an excessively high daily peak F/M.
2. Diurnal fluctuations in the sludge blanket level will be reduced, thus reducing the potential for solids being drawn over the weir by the higher velocities in the zone of the effluent weirs.

In a new design, equalization permits the use of a smaller clarifier, with a better probability of consistently meeting effluent requirements without loss of efficiency.

4.3.3 Impact on Chemical Treatment

In chemical coagulation and precipitation systems using iron or aluminum salts, the quantity of chemical coagulant required for phosphorus precipitation is proportional to the mass flow of phosphorus entering the plant. If lime is used, the amount required is proportional to the incoming alkalinity of the wastewater and desired reaction pH. Other chemical treatment applications in small plants also require proportional chemical dosing. For denitrification, the amount of methanol to be added is proportional to the mass flow of nitrate entering the denitrification reactor.

Because in small plants the mass flow variation of these contaminants is generally much greater than it is in large plants, the degree of automatic control required and associated capital costs are proportionally higher. Equalization of the flow and some damping of concentration variation will permit utilization of less sophisticated control equipment and will reduce control equipment cost, resulting in more effective use of chemicals.

4.3.4 Impact on Filtration

Rapid sand filters are usually designed for a constant rate of flow and are more efficient if operated at an equalized flow rate. A more constant flow rate will reduce the required surface area and produce more uniform filtration cycles. If slow sand filters are operated on an intermittent dosing-resting cycle, treatment will not be seriously affected by flow variations.

4.3.5 Impact on Activated Carbon Adsorption

If the activated carbon process is sized for peak flows and the capacity of the carbon regeneration system is adequate for use during surges or organic loadings, equalization is not necessary. Smaller (or fewer) carbon contactors may be required, however, if flow equalization is used (6).

4.3.6 Impact on Pumping and Piping

Pump and pipe capacities downstream of equalization units can be reduced in new designs. Equalization tanks upstream of long lines to the treatment plant can reduce the size and cost of such pipelines, as well as equalize the flows through the treatment processes.

4.3.7 Impact on Plant Operation

Process control may be simplified by equalization. Treatment processes, typically sized for the average flow of the maximum day, often do not completely meet the peak demands of the incoming wastes. This short-term overloading has an adverse effect on the treatment efficiency (2). Equalization tanks can also be used for temporary storage of wastewater removed from units undergoing repair or maintenance.

4.3.8 Miscellaneous Benefits

The equalization basin provides an excellent point of return for recycled concentrated waste streams, such as digester supernatant, sludge dewatering filtrate, and polishing filter backwash.

Some BOD reduction is likely to occur in an aerated equalization basin (7) (8) (9). A 10- to 20-percent reduction has been suggested (9) for an inline raw wastewater basin. However, the degree of reduction will depend on the detention time in the basin, the aeration provided, the wastewater temperature, and other factors.

Roe (3) observed that preaeration may improve the treatability of raw wastewater, by creating a positive oxidation-reduction potential and thereby reducing the degree of oxidation required in subsequent stages of treatment.

Equalization of flow reduces the probability of excessive chlorine dosage, which in turn reduces the possibility of producing toxic chlorine compounds.

4.4 Disadvantages of Dry-Weather Flow Equalization

Disadvantages occurring under certain circumstances include:

1. The operation and maintenance costs of the equalization facilities may nullify its advantages.
2. It may strip out H_2S if the raw wastewater is anaerobic, causing an odor problem.
3. If equalization retention times are excessive, the drop in wastewater temperature in cold weather may affect clarification, disinfection, and some biological processes.

4.5 Methods of Equalization

Normal domestic wastewater flows, excluding most groundwater infiltration or stormwater inflow, may be equalized. In many cases, however, even the dry-weather flow will include some ground water infiltration. Every feasible effort should be made to reduce both ground water infiltration and stormwater inflow to a minimum before the treatment facility is constructed (1) (10). The treatment plant, however, must be designed both for the existing and expected future wastewater flows that will reach the plant within the design period. Flow equalization methods include:

1. A good method for small-flow plants is (after degritting) designing equalization into a treatment process unit, such as an aerated lagoon, an oxidation ditch, or an extended aeration tank, by allowing for variable depth operation and a discharge controlled to near the average 24-hr flow rate. The Dawson, Minnesota, wastewater treatment facility uses a variable volume oxidation ditch as a steady-state control device to equalize the flow to subsequent units (11).
2. Sideline equalization tanks may be sized to receive and store flows in excess of the average daily flow rate and then to return the stored wastewater at a rate that will raise subaverage plant flow to the average rate (see Figure 4-2). The organic loading variations on the subsequent processes are partially affected, particularly during periods of less than average flow. This scheme minimizes pumping requirements at the expense of less effective concentration damping.
3. Inline equalization tanks, sized in the same manner as sideline tanks, equalize the outflow at near the average daily flow rate (see Figure 4-3). This equalization results in significant concentration and mass flow damping. An orbal inline equalization basin (Figure 4-4) has been incorporated into the Duck Creek Wastewater Treatment Plant at Garland, Texas (12).

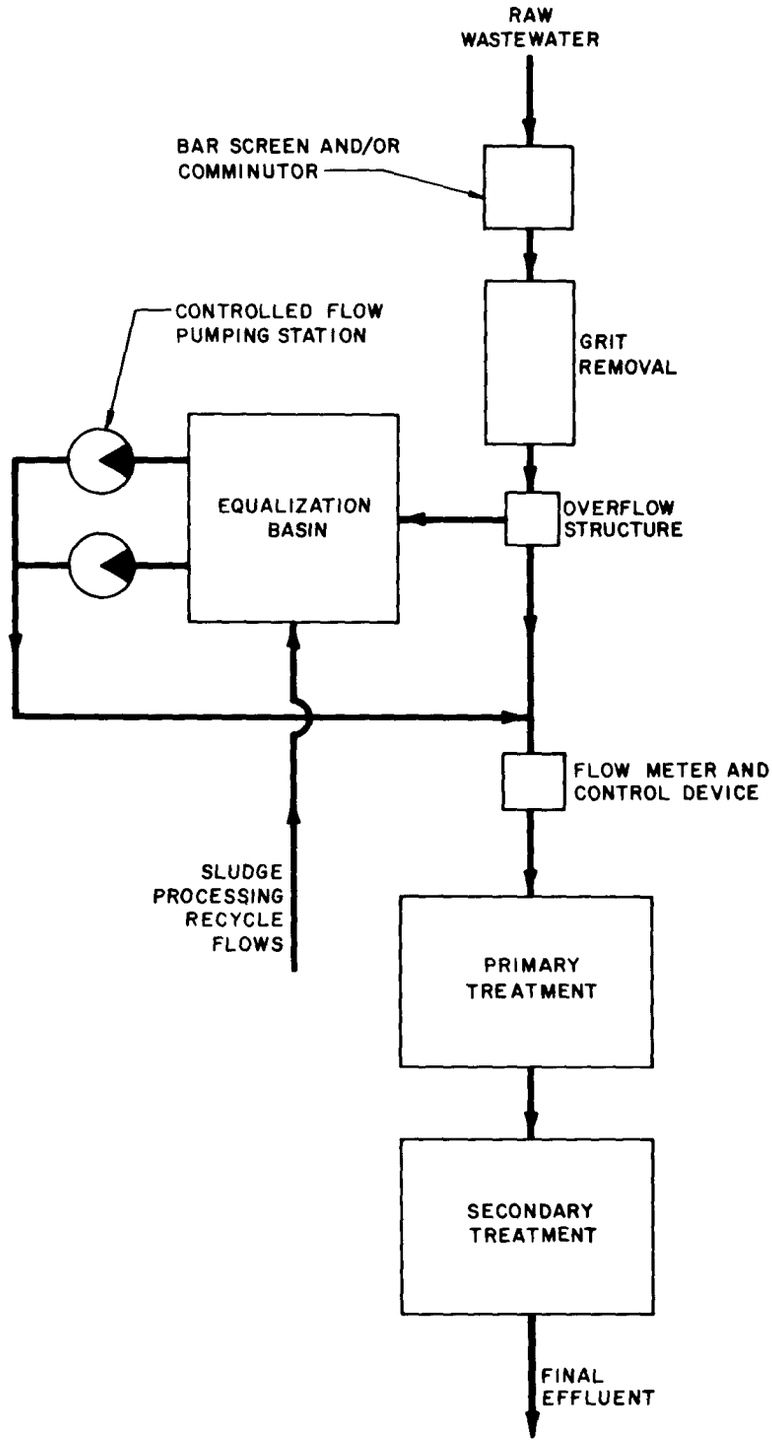

FIGURE 4-2

SIDELINE EQUALIZATION

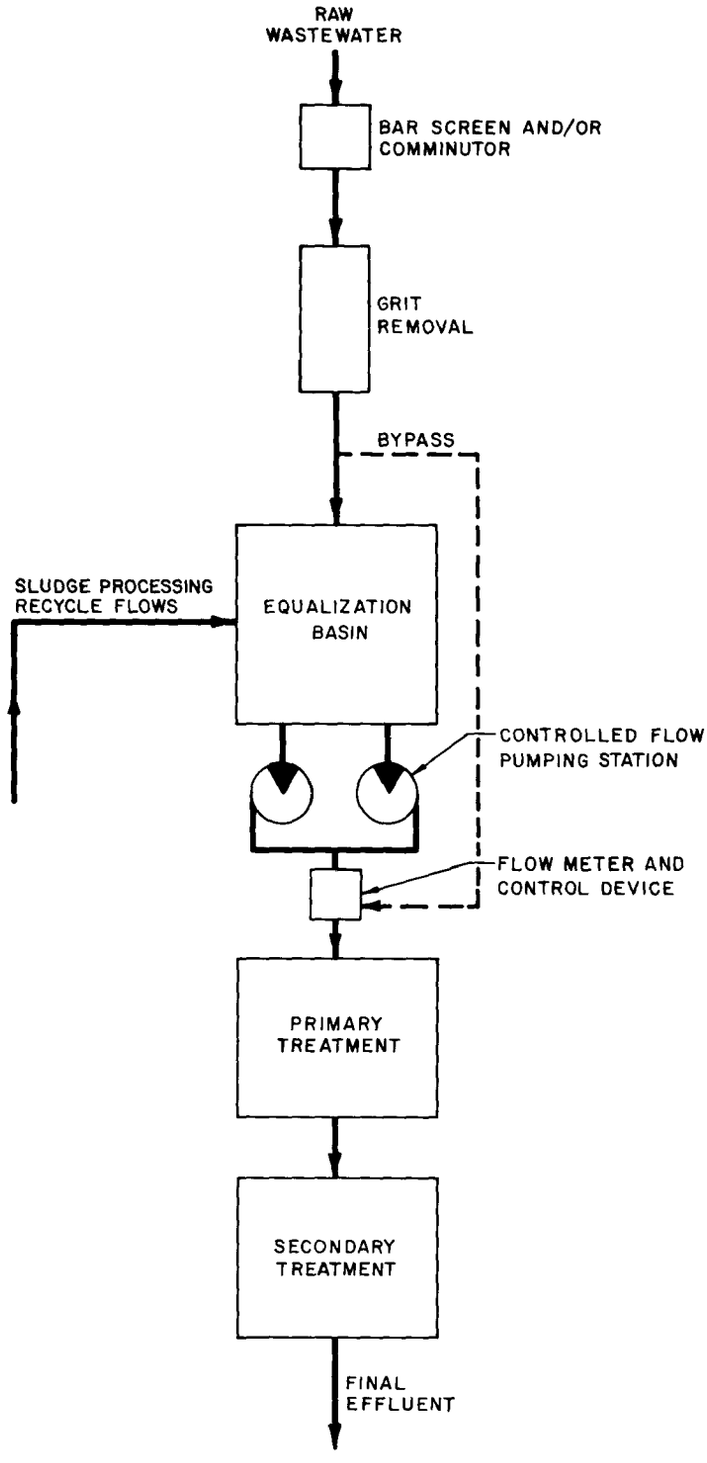

FIGURE 4-3

INLINE EQUALIZATION

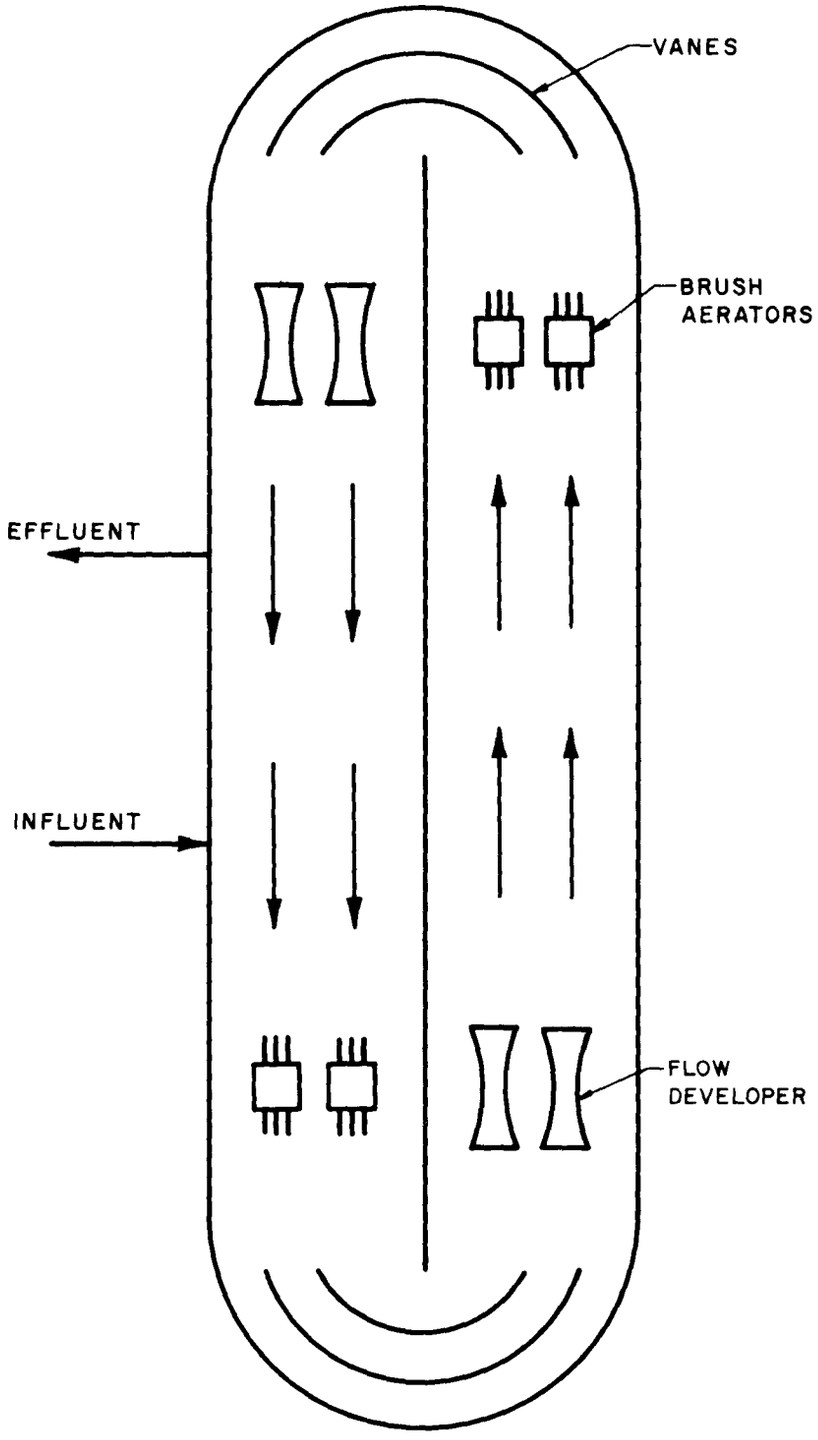

FIGURE 4-4

ORBAL EQUALIZATION UNIT

4. Extra capacity provided in large trunk or interceptor sewers leading to the treatment plant for intermittent stormwater inflow may be used for storage of peak flows. The flow from the trunk sewer can then be controlled at near the average flow rate. Such velocities may allow deposition of solids in the sewer, however. Nightly or semiweekly drawdown, with adequate velocities to flush out deposited solids, must be designed into such a system, if some method of continuous mixing in the conduit is not provided. Above average BOD concentrations may occur during the flushing. This method of equalization is less attractive to smaller communities, however.

Provision of compartmentalized or multiple basins will allow flexibility in dewatering a portion of the facility for maintenance or equipment repair while still providing some flow equalization. Single basin installations, which may be used for small plants, must maintain complete treatment during dewatering. This will require a bypass line around the basin, to allow the downstream portion of the plant to operate if the flow equalization facility is out of service.

The equalization unit may be placed at a pumping station site at the edge of the collection system, to reduce the size of the trunk or interceptor sewer to the treatment plant. This will reduce the required sizes of treatment process units as well as of the pipeline and may make cost effective the use of an equalization unit (particularly if the pipeline affected is over 0.5 mile [0.8 km] in length) (13). This location for equalization is particularly good, if odor problems from septic wastewater in the pipeline occur.

4.6 Equalization Design

Factors requiring evaluation in the selection of the type, size, and mode of operation of an equalization process are listed below (1) (2) (8) (11).

1. Degree of flow rate and organic loading equalization required to insure reliable and efficient process performance.
2. Optimum location in the system.
3. Type of equalization best suited to items 1 and 2.
4. Optimum volume required for equalization.
5. Compartmentalization needed to best handle present and future flows.
6. Type of construction.
7. Aeration and mixing equipment.
8. Pumping and discharge flow rate control.
9. Minimum operation and maintenance requirements under adverse weather and flow conditions.
10. Feasible alternative treatment components sized for peak flows.

Treatment processes sized for peak flows at minimum water temperatures, to eliminate the need for equalization for consistent reliability, should be compared with sizes reduced to meet equalized needs of processes operated at equalized flows and characteristics, to ascertain the cost effectiveness for each. At some smaller treatment plants, some degree of

equalization may be essential if consistently acceptable plant effluent is to be obtained, particularly if the quality of the effluent must meet very strict standards.

Some variation in the feed to any process is normally permissible, because the design of most processes includes some allowance for such variations. For example, final clarifiers for activated sludge units are designed for the rate of flow expected on the average day of the design year, but the overflow rate at maximum flow is used to control the design. After studying the settling characteristics expected of the suspended solids and the provisions included in the design to optimize settling (such as the spacing, location, and size of the effluent launders), the clarifier overflow rate is selected, taking into consideration the ratio of peak to average flow and associated solids loadings on the day of maximum flow in the design period. If the day's flow is equalized, the peak overflow rate will equal the average and allow for reduced capacity. The designer must evaluate the proposed design and 1) determine the amount of fluctuation that can be satisfactorily handled without impairing performance, 2) provide equalization sufficient to insure fluctuations no more than that amount, and 3) compare that scheme to others requiring greater or lesser degrees of equalization, to determine the optimum design.

4.6.1 Determining Necessary Volume for Equalization

To determine the required equalization storage capacity, the maximum variation in 24-hr flow expected in the design should first be established. Figure 4-5 illustrates a typical example of a set of flow and BOD curves for the maximum day at the end of a design period.

The mass diagram, hydrograph, or 24-hr maximum day flow can be developed from Figure 4-1 and plotted as on Figure 4-5. To obtain the volume required to equalize the 24-hr flow:

1. Draw a line between the points representing the accumulated volume at the beginning and end of the 24-hr period. The slope of this line represents the average rate of flow.
2. Draw parallel lines to the first line through the points on the curve farthest from the first line. These lines are shown as A and B on Figure 4-5.
3. Draw a vertical line between the lines drawn in No. 2. The length of this line represents the minimum required volume.

The equalization volume needed to balance the diurnal flow is a larger percentage of the day's flow for smaller than for larger wastewater treatment plants. The volume needed for equalization of flows will usually vary from about 20 to 40 percent of the 24-hr flow for smaller plants and from about 10 to 20 percent of the average daily dry-weather flow for larger plants.

To meet the expected diurnal flow variations over the entire design period without excessive use of energy, the equalization basin should be divided into two or more independent cells. In addition, extra storage volume is needed to (4):

1. Balance unexpected changes in diurnal flows.

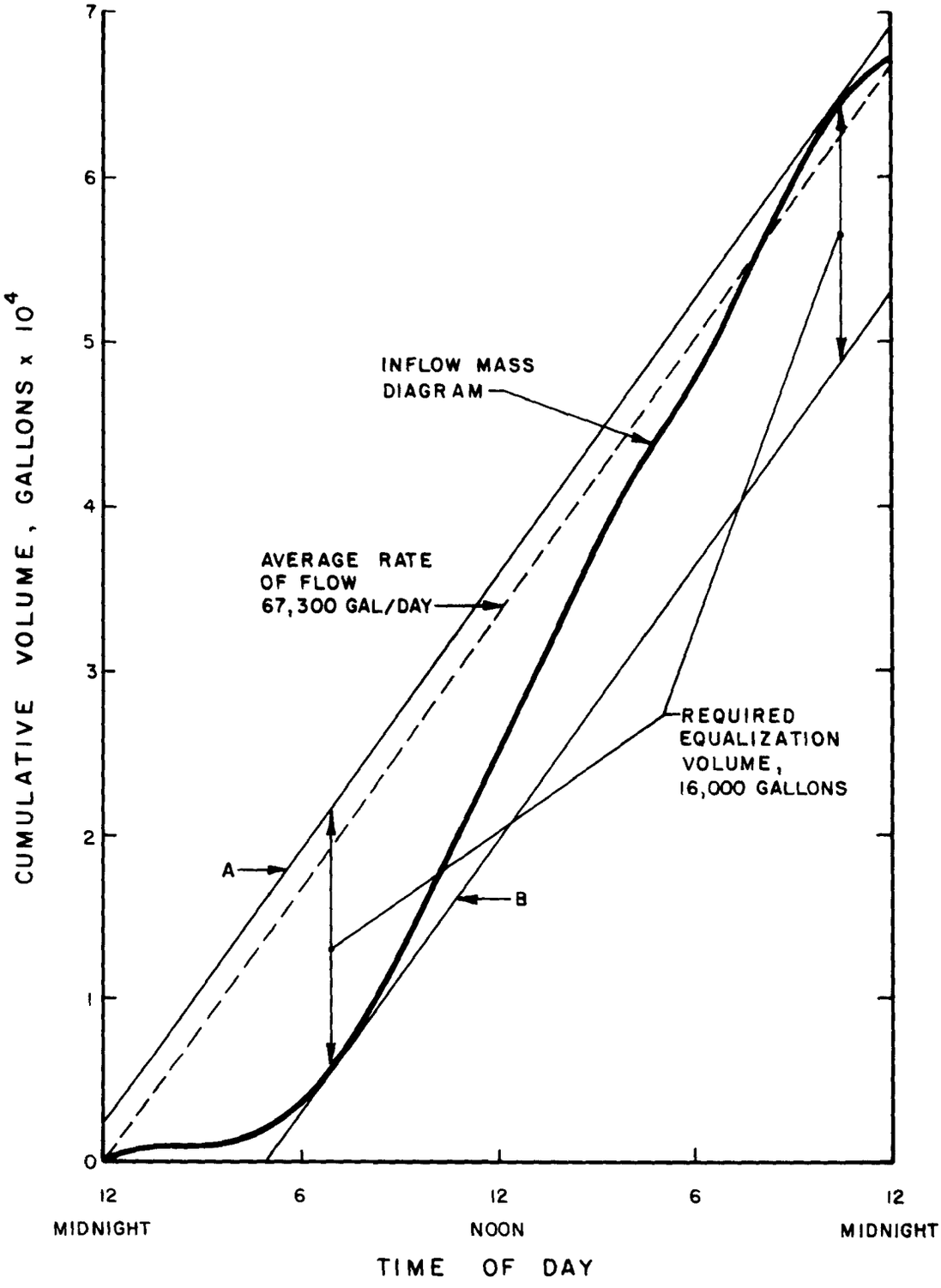

FIGURE 4-5

HYDROGRAPH OF A TYPICAL DIURNAL FLOW

2. Provide continuous operation of mixing and aeration equipment.
3. Provide some volume for (at least) partial equalization of intermittent organic loadings from, for example, recycling of sludge scraped from bottom of equalization tank, shock discharges of septage, or discharges of process sidestreams.
4. Provide freeboard above maximum water level.

It should be noted that, although space outside the operating volume cannot be used to compute flow equalization, it does enter into concentration equalization.

4.6.2 Basin Construction

Equalization basins may be constructed of earth, concrete, or steel. Earthen basins are generally the least expensive. They can normally be constructed with side slopes varying between 3:1 and 2:1 horizontal to vertical, depending on the type of lining used. To prevent embankment failure in areas of high groundwater, drainage facilities should be provided for groundwater control. If aerator action and wind forces cause the formation of large waves, precautions should be taken in design to prevent erosion. Provision of a concrete pad directly under the equalization basin aerator or mixer is customary. The top of the dikes should be wide enough to insure a stable embankment and, for economy of construction, sufficient to accommodate mechanical compaction equipment.

Inline basins should be designed to achieve complete mixing to optimize concentration damping. Elongated tank design encourages plug flow and should be avoided. Inlet and outlet configurations should be designed to prevent short circuiting. Designs that discharge influent flow as close as possible to the basin mixers are preferred.

4.6.3 Air and Mixing Requirements

The mixing and aeration equipment for equalization basins must be selected carefully. In a typical equalization unit, the level of wastewater in each cell in use will fluctuate about 40 to 90 percent of the design depth. As the cells fill and empty, the aeration and mixing power requirements vary. In freezing climates, floating aerators may become "frozen in" during a power outage.

Mixing equipment should be designed to blend the contents of the tank and to prevent deposition of solids in the basin. To minimize mixing requirements, grit removal facilities should precede equalization basins if possible. Aeration is required to prevent the wastewater from becoming septic. Mixing requirements for blending a municipal wastewater having an SS concentration of approximately 200 mg/l range from 0.02 to 0.04 hp/1,000 gal (0.004 to 0.008 kW/m^3) of storage. To maintain aerobic conditions, air should be supplied at a rate of 1.25 to 2.0 cfm/1,000 gal (0.009 to 0.0015 $m^3/m^3 \cdot min$) of storage (13).

Mechanical aerators will provide both mixing and aeration. The oxygen transfer capabilities of mechanical aerators operating in tap water under standard conditions vary from 3 to 4 lb O_2/hp-hr (1.8 to 2.4 kg/kW-hr). Baffling may be necessary to insure proper mixing, particularly with a circular tank configuration. Minimum operating levels for floating aerators ginerally exceed 5 ft, and vary with the horsepower and design of the unit. The horsepower

requirements to prevent deposition of solids in the basin may greatly exceed the horsepower needed for blending and oxygen transfer. In such cases, it may be more economical to install mixing equipment, to keep the solids in suspension and furnish the air requirements through a diffused air system, or to mount a surface aerator blade on the mixer.

Note that other factors, including maximum operating depth and basin configuration, affect the size, type, quantity, and placement of the aeration equipment. In all cases, the manufacturer should be consulted.

Additional information on mixing and aeration design is presented in Chapters 7 and 10.

4.6.4 Selecting Pumping Equipment

Because of the large variation in hydraulic head necessary for the operation of equalization tanks, pumping is normally required. If a pumping station is required in the headworks, the pumps can be designed for the additional head needed for equalization basin operation. Gravity discharge from equalization will require an automatically controlled, flow-regulated device.

Flow-measuring devices are required downstream of equalization units, to monitor the equalized flow. Control of preselected equalization rates can be either automatic (with manual standby) or manual.

4.6.5 Miscellaneous Design Considerations

The following features, based on recommendations presented in *Process Design Manual for Upgrading Existing Wastewater Treatment Plants* (1), should be considered in designing equalization units:

1. Providing a means of measuring, monitoring, and controlling the flow from the equalization basin.
2. Providing a means of varying the mixing as the depth varies, to conserve energy.
3. Screening and degritting raw wastewater before equalization, to prevent grit and rag problems.
4. Requiring adjustable legs and low water cutoff for protection of floating aerators.
5. Providing means for cleaning grease and solids accumulation from equalization unit walls.
6. Providing means for removing scum, foam, and floating material.
7. Providing an emergency high-water overflow.

4.7 Examples

Two comparative examples illustrating inplant and sideline equalization follow. In both cases, the data shown on Figures 4-1 and 4-5 will form the basis for the computations. The plant to be studied is an extended aeration, activated sludge plant, consisting of bar screens,

wedge-wire screens, pumping, aeration tank, clarifier, and chlorination facility. The computations will deal only with 1) additional facilities required to equalize the flow to the clarifier and chlorination units, and 2) resulting changes in the sizes of the aeration tank, clarifier, and chlorinator facilities.

4.7.1 Inplant Equalization

The inplant equalization will provide the needed equalization volume (16,000 gal, or 60.6 m^3 [Figure 4-5]) by adding that amount to the size of the aeration tank. An example of the detailed design of an extended aeration, activated sludge system is shown in Section 7-9. For this example (Figure 4-6) the volume is assumed to equal the 24-hr average flow (67,000 gpd, from Figure 4-5).

The aeration tank size, without equalization volume, will be

$$V = 67{,}300/7.48 = 9{,}000 \text{ ft}^3$$

Assuming a depth of 15 ft, the area will be

$$A = 9{,}000/15 = 600 \text{ ft}^2$$

The diameter will be

$$D = (4\ A/\pi)^{0.5}$$

$$D = 27.6 \text{ ft}$$

The equalization tank volume to be added will be

$$V = 16{,}000/7.48 = 2{,}139 \text{ ft}^3$$

The additional depth will be

$$\Delta d = 2{,}139/600 = 3.6 \text{ ft}$$

To incorporate the equalization volume in the aeration tank, the depth below high water will be 18.6 ft (5.7 m). This additional depth requires the amount of reinforced concrete in the walls to be increased by 11.8 cu yd (9.02 m^3).

The steel baffle in front of the effluent port will be 4 ft by 4 ft (1.2 m by 1.2 m). The baffle will open on the sides, 1 ft (0.3 m) from the wall, and centered on the discharge port.

A proportional controller with a hydraulically controlled butterfly valve, placed on a metal platform on the outside of the aeration tank, will be used to control the daily flow. The daily flow will be adjustable, between 20 and 60 gpm (1.3 and 3.8 l/s). A venturi-type meter and transmitter will be used to measure flow and to actuate both the butterfly valve control and the chlorine dosage control. A 3-in. (76.2-mm) butterfly valve will be operated and

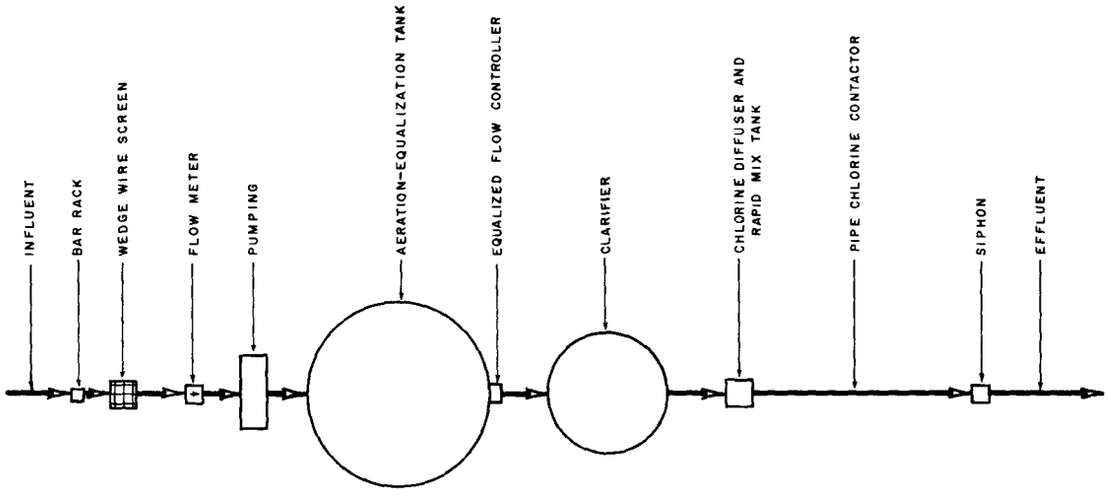

TREATMENT PLANT CONFIGURATION

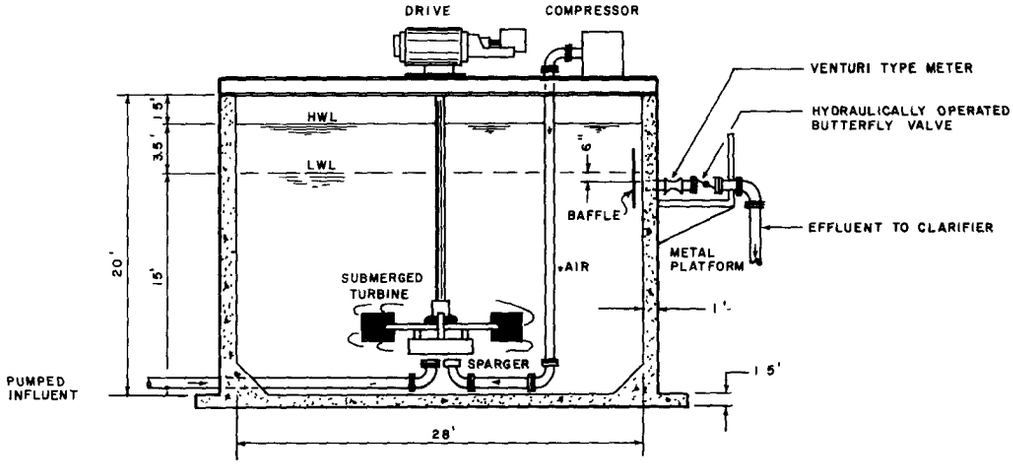

AERATION-EQUALIZATION TANK

FIGURE 4-6

INPLANT EQUALIZATION

controlled hydraulically. The plant pressurized potable water system will provide water for the hydraulic system. Head loss through the meter and valve will be 1 ft (0.3 m) or more.

The additional average requirements for pumping will be about:

$$hp = QWH/550 \text{ (efficiency)}$$

$$hp = [(67{,}300)(8.33)(3.5)]/[(2)(550)(0.6)(86{,}400)]$$

$$hp = 0.034$$

where

Q = flow, mgd

W = density, lb/ft^3

H = head, ft

By equalizing the flows, the clarifier volume and the chlorination facility capacity can be halved, because the peak flow (144,000 gpd, or 545 m^3/d [from Figure 4-11]) will be reduced to 67,300 gpd (254.7 m^3/d).

Because the clarifier overflow rate at maximum flow should be no more than 800 gpd/ft^2 (32.6 $m^3/m^2 \cdot d$), the clarifier area required for *unequalized* flow will be

$$A = (144{,}000 \text{ gpd})/(800 \text{ gpd/ft}^2)$$

$$A = 180 \text{ ft}^2$$

To obtain a minimum detention time of 120 minutes, the side wall depth at *unequalized* flow will be

$$d = (144{,}000)/[(12)(7.48)(180)]$$

$$d = 8.9 \text{ ft (use 9 ft + 1.5 ft of freeboard)}$$

The diameter of the tank will therefore be

$$D = (4\,A/\pi)^{0.5} = 15.1 \text{ ft}$$

With *equalized* flow, the clarifier area may be reduced to

$$A = (67{,}300 \text{ gpd})/(800 \text{ gpd/ft}^2)$$

$$A = 84 \text{ ft}^2$$

The depth will remain 9 ft (2.7 m).

The diameter will then be

$$D = (4\ A/\pi)^{0.5} = 10.3\ \text{ft}$$

The required quantity of reinforced concrete will be reduced by 10.4 cu yd.

The chlorine contact pipe needed for 30 minutes' detention for *unequalized* flow will require a volume of

$$V = 144{,}000/[(24)(2)(7.48)] = 400\ \text{ft}^3$$

Assuming a 3-ft (0.9-m) diameter pipe, the length needed will be

$$L = V/A = 400/[(0.7854)(3)^2] = 56.6\ \text{ft (use 60 ft)}$$

The chlorine contact pipe for *equalized* flow will require a volume of

$$V = 67{,}300/[(24)(2)(7.48)] = 188\ \text{ft}^3$$

Assuming a 2-ft.- (0.6-m) diameter pipe, the length then will be

$$L = V/A = 188/[(0.7854)(2)^2] = 60\ \text{ft}$$

The length-to-diameter ratios would be 20:1 and 30:1, respectively, insuring a relatively plug-type flow.

4.7.2 Sideline Equalization

The change in plant configuration from that shown on Figure 4-6, to add sideline equalization, is shown on Figure 4-7. The volume needed for equalization remains 2,139 ft^3 (59.9 m^3) for the 24-hr design flow. Assuming an operating depth of 8 ft (2.4 m), the area of the sideline equalization tank will be

$$A = 2{,}139/8 = 267.4\ \text{ft}^2$$

The diameter will be

$$D = (4\ A/\pi)^{0.5} = 18.5\ \text{ft}$$

An additional depth of 4 ft (1.2 m) below low water level will be needed for operation of the turbine; 1.5 ft (0.45 m) above high water level will be required for freeboard, making the total tank depth 13.5 ft (4.05 m).

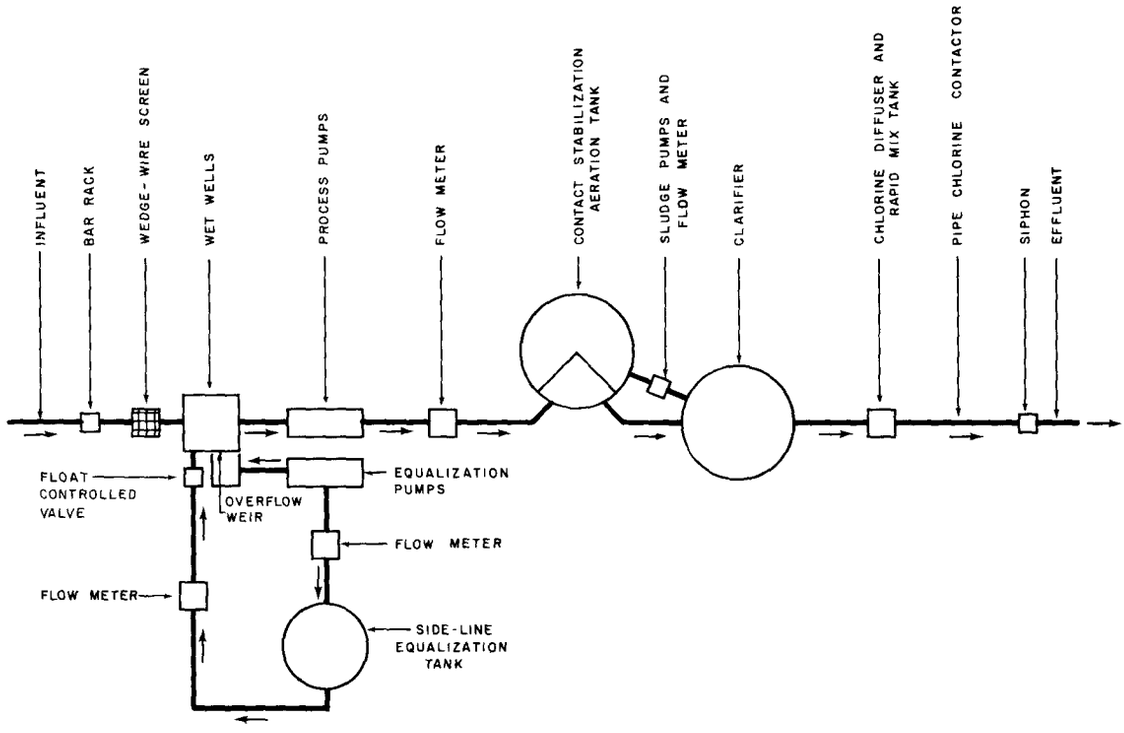

TREATMENT PLANT SCHEMATIC

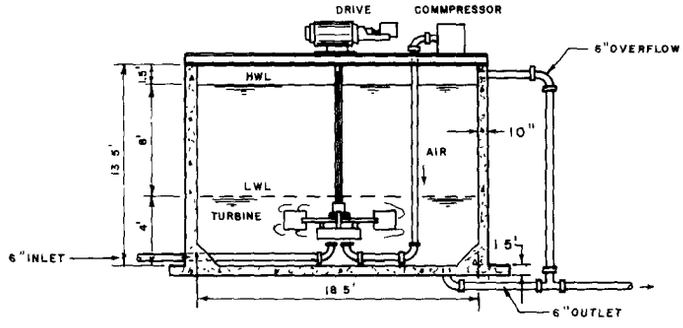

EQUALIZATION TANK

FIGURE 4-7

SIDELINE EQUALIZATION

A submerged turbine aerator, similar to that used in the areation tanks, should be used for aeration and mixing in the equalization basin. The turbine should be large enough to prevent anaerobic conditions. The horsepower needed for the submerged turbine will be

$$hp = (0.04\ hp)(16{,}000\ gal)/1{,}000\ gal$$

$$= 0.64\ hp\ (\text{use a } 3/4\text{-hp drive})$$

The compressor should be able to provide air against a head varying between 6 ft and 15 ft (1.8 m and 4.5 m).

$$\text{Air required} = (1.5\ ft^3/min)(16{,}000\ gal)/(1{,}000\ gal)$$

$$= 24\ ft^3/min$$

Three additional pumps will be required, each with a capacity of 25 gpm (1.6 l/s) against about a 25-ft (7.5-m) head; one perhaps should be variable speed. These will require additional space in the pumping station, plus additional wet well volume, piping, and valves.

It is possible to substitute a contact-stabilization, activated sludge system for the extended aeration system, if sideline equalization is used. However, because of the added sludge to be wasted and its drying capacity, this system would require an aerobic digestion tank of 15 to 20 days' retention for waste sludge for further stabilization, before it is placed on the sludge-drying beds. This alternative should also be included in the cost-effectiveness study for a treatment plant for a specific location.

4.8 Costs of Equalization

The costs of adding inplant or sideline equalization to a 67,300-gpd (254.7 m^3/d) wastewater treatment plant, using the examples in Section 4.7 and a U.S. EPA Treatment Cost Index of 225, are presented in the following subsection.

4.8.1 Inplant Equalization

Capital Cost Changes	
Added aeration tank volume (11.8 yd^3 reinforced concrete)	$ 3,290
Proportional controller and butterfly valve installation	2,500
Clarifier (reduced size) (10.4 yd^3 reinforced concrete)	1,005
Chlorine contact pipe (reduced size)	620
Subtotal	$ 7,415
Annual Cost Changes	
Added electrical power use (at $0.04/kWh)	$ 10
Added O & M labor	500
Subtotal	$ 510

Intangible Benefits

Better chance that effluent will consistently meet standards; minimization of chlorine dosage reduces chance of toxic chlorine compounds in effluent.

4.8.2 Sideline Equalization

Capital Cost Changes

Equalization tank (48.1 yd^3 reinforced concrete)	$11,230
Equalization pump installation	17,380
Flow meters (two)	3,600
Extra piping and valves	2,570
Submerged turbine and compressor	12,120
Reduction in clarifier size (10.4 yd^3 reinforced concrete)	1,005
Reduction in chlorine pipe contractor size	620
Subtotal	$48,525

Annual Cost Changes

Added electric power use (at $0.04/kWh)	$ 1,450
Added O & M labor	1,350
Subtotal	$ 2,800

Intangible Benefits

Better chance that effluent will consistently meet standards; minimization of chlorine dosage reduces chance of toxic chlorine compounds in effluent.

4.9 Case Studies

4.9.1 Walled Lake-Novi Wastewater Treatment Plant

The Walled Lake-Novi wastewater treatment plant is a new (1971), 2.1-mgd facility employing sideline flow equalization. It was designed to meet stringent effluent quality standards, including 1) a summer monthly average BOD_{20} of 8 mg/l, 2) a winter monthly average BOD_{20} of 15 mg/l, and 3) 10 mg/l of SS. The facility used the activated sludge process, followed by multimedia tertiary filters. Ferrous chloride and lime are added ahead of aeration for phosphorus removal. Sludge is processed by aerobic digestion and dewatered on sludge drying beds. A schematic diagram of this facility is shown in Figure 4-8.

A major factor in the decision to employ flow equalization was the desire to load the tertiary filters at a constant rate. The equalization facility consists of a 315,000-gal (1.190-m^3) concrete tank, equivalent in volume to 15 percent of the design flow. The tank is 15 ft (4.5 m) deep and 60 ft (18 m) in diameter. Aeration and mixing are provided by a diffused air system with a capacity of 2 cfm/1,000 gal (0.015 $m^3/m^3 \cdot min$) of storage. Chlorination is provided for odor control. A sludge scraper is used to prevent consolidation of the sludge.

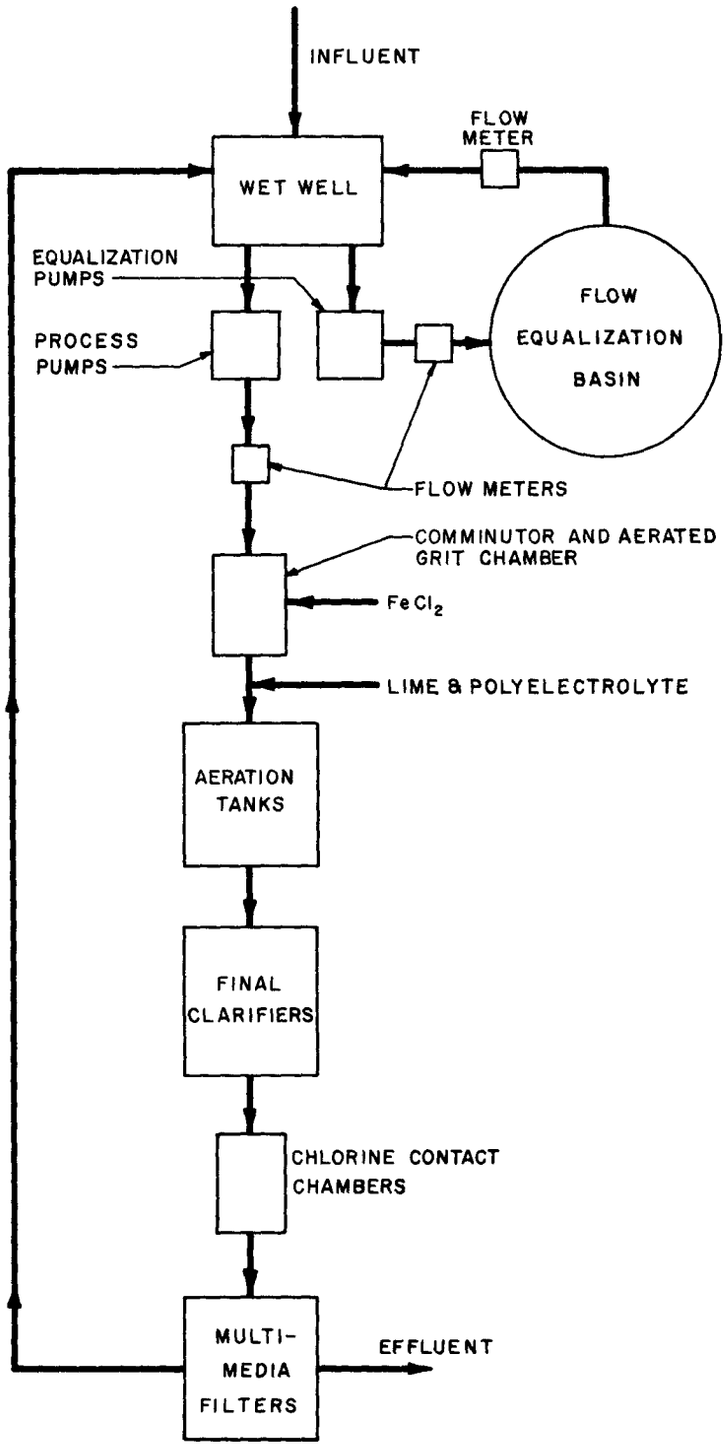

FIGURE 4-8

WALLED LAKE-NOVI WASTEWATER TREATMENT PLANT

Operation of the equalization facility is described below (14). The process pumping rate is preset on the pump controller, to deliver the estimated average flow to the treatment processes. Flow delivered by these pumps is monitored by a flow meter that automatically adjusts the speed of the pumps to maintain the average flow rate. When the raw wastewater flow to the wet well exceeds the preset average, the wet well level rises, thereby actuating variable speed equalization pumps, which deliver the excess flow to the equalization basin. When the inflow to the wet well is less than the average, the wet well level falls and an automatic equalization basin effluent control valve opens. The valve releases enough wastewater to the wet well to reestablish the average flow rate through the plant. Because this is a new plant (as opposed to an upgraded plant), no comparative data exist. However, the treatment facility is generally producing a highly treated effluent, with BOD and SS less than 4 mg/l and 5 mg/l, respectively (13).

4.9.2 Novi Interceptor Retention Basin

The Novi interceptor retention basin (15) illustrates the utilization of an equalization basin within the wastewater collection system.

A portion of the wastewater collection system for the city of Novi, Michigan, discharges to the existing Wayne County Rouge Valley interceptor system. Because of the existing connected load on the Wayne County system, Novi's wastewater discharge to the interceptor system is limited to a maximum flow rate of 4 cfs (0.11 m^3/s). This rate was matched by the existing maximum diurnal flow form the city. To serve additional population, it was decided to equalize wastewater flows to the interceptor system. By continuously discharging to the interceptor at an average rate of flow, total wastewater flows from Novi to the Wayne County Rouge Valley interceptor system could be increased by a factor of 2.6.

An 87,000-ft^3 (2,436-m^3) concrete basin was constructed for equalizing flows. The tank has a diameter of 92 ft (28 m) and a depth of 10.5 ft (3.2 m). Aeration and mixing are provided by a diffused air system capable of delivering 2 cfm/1,000 gal (0.015 $m^3/m^3 \cdot min$) of storage.

A manhole located upstream of the equalization basin intercepts flow in the existing Novi trunk sewer. This intercepted wastewater flows into a weir structure, which allows a maximum of 4 cfs (0.11 m^3/s) to discharge into the Wayne County system. Wastewater in excess of the preset average overflows into a wet well and is pumped to the equalization basin. If flows in the interceptor fall below the preset average, a flow control meter generates a signal opening an automatic valve on the effluent line of the basin, allowing stored wastewater to augment the flow.

4.9.3 Dawson, Minnesota

To improve operation and reduce the costs of biosolids clarification, chemical treatment, final clarification, and chlorination, equalization was considered necessary at the Dawson, Minnesota, wastewater treatment plant. Rather than build a separate equalization chamber,

the aeration unit was designed as a variable depth oxidation ditch, to obtain both hydraulic and solids loading equalization (16).

The variable depth oxidation ditch shown in Figure 4-9 illustrates this process. Design criteria for this plant are contained in Table 4-2; performance data are included in Table 4-3.

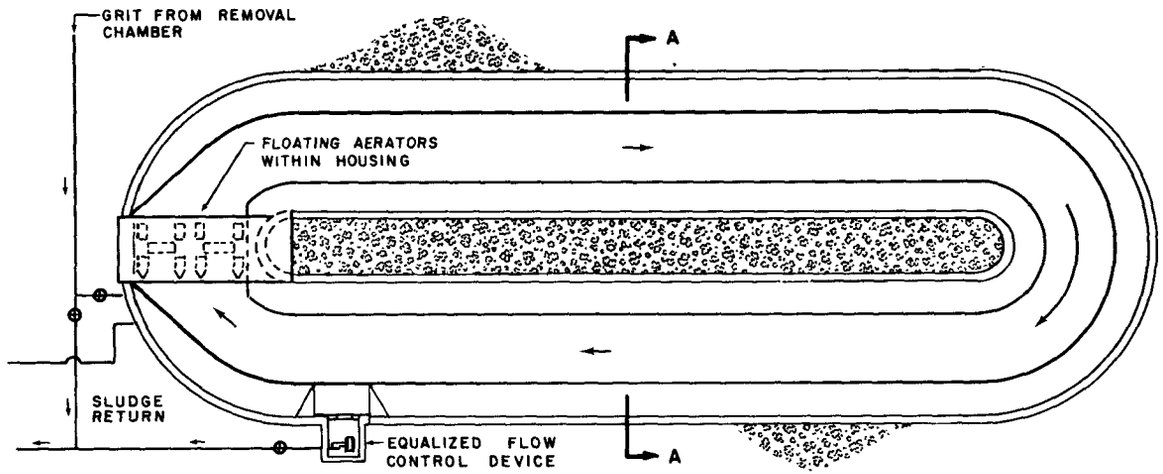

PLAN VIEW

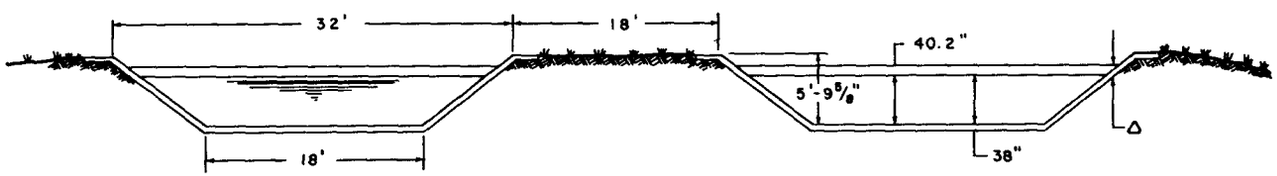

SECTION A-A

FIGURE 4-9

VARIABLE DEPTH OXIDATION DITCH
DAWSON, MINNESOTA

TABLE 4-2

PRINCIPLE DESIGN CRITERIA, DAWSON, MINNESOTA, WASTEWATER TREATMENT PLANT

Area Served	City of Dawson, Minnesota
1970 Population	1,800
2020 Design Population	2,200
2020 Design Population Equivalent	2,400
1970 Flow, mgd	0.20
2020 Design Flow, mgd	0.26
Influent BOD, mg/1	230
Effluent BOD required, mg/1	5
Estimated Industrial Flow (first 5 years)	Negligible
Receiving Water	West Branch of the Lac Qui Parle River
Aeration Channel	
Overall Length, ft	244
Overall Width, ft	84
Minimum Operating Depth, ft	3.0
Maximum Operating Depth, ft	4.1
Volume (minimum depth), ft^3	25,675
Volume (maximum depth, ft^3	36,730
BOD Loading (minimum volume), lb/1,000 ft^3 day	19.5
BOD Loading (maximum volume), lb/1,000 ft^3 day	13.5
Detention Time (minimum depth), hr	17.7
Detention Time (maximum depth), hr	25.4
Bio-Solids Separation Unit	
Volume, gal	32,000
Volume, ft^3	4,275
Detention Time, hr	3
Surface Area, ft^2	450
Designed Hydraulic Loading Rate, gpd/ft^2	580
Chemical Quick Mix Tank	
Volume, ft^3	9.5
Detention Time, sec	24
Chemical Slow Mix Tank	
Volume, ft^3	360
Detention Time, minutes	15
Biochemical Solids Separation Unit	
Volume, ft^3	42,400
Detention Time, hr	5,670
Surface Area, ft^2	4
Designed Hydraulic Loading Rate, gpd/ft^2	648
	400

TABLE 4-3

PERFORMANCE DATA, DAWSON, MINNESOTA

Period	No. of Samples	Characteristic	Average Influent	Concentration Effluent
			mg/l	mg/l
9/7/73 to 12/13/73	9	Nitrogen	46.1	21.45
9/7/73 to 12/13/73	8	Phosphorus	9.8	3.9
9/7/73 to 12/13/73	11	BOD_5	245	3.7
9/17/73 to 12/13/73	11	SS	267.5	7.2
9/7/73 to 12/13/73	13	COD	908	45

Note: Without chemical addition.

1. Analyses were based on grab samples or composites collected between 11 a.m. and 3 p.m.
2. Average flow from 9/7/73 to 12/12/73 was 185,000 gpd.
3. MLSS varied between 3,000 and 9,000 mg/l, with the higher MLSS value in colder weather.
4. F/M varied between 0.3 and 0.6 lb BOD/lb MLSS.
5. Sludge age was about 30 days.

4.10 References

1. *Process Design Manual for Upgrading Existing Wastewater Treatment Plants.* U.S. EPA, Office of Technology Transfer, EPA-625/1-74-004a (October 1974).

2. LaGrega, M.D., and Keenan, J.D., "Effects of Equalizing Wastewater Flows." *Journal Water Pollution Control Federation*, vol. 46, No. 1 (January 1974).

3. Roe, R.C., "Preaeration and Air Flocculation." *Sewage Works Journal,* vol. 23, No. 2, pp. 127-140 (1951).

4. Seidel, H.F., and Baumann, E.R., "Effect of Preaeration on the Primary Treatment of Sewage." *Journal Water Pollution Control Federation,* vol. 33, No. 4, pp. 339-355 (1961).

5. Boon, A.G., and Burgess, D.R., "Effects of Diurnal Variations in Flow of Settled Sewage on the Performance of High Rate Activated Sludge Plants." *Water Pollution Control,* pp. 493-522 (1972).

6. *Process Design Manual for Carbon Adsorption.* U.S. EPA, Office of Technology Transfer, EPA-625/1-73-002a (October 1973).

7. Unpublished data, Duck Creek Wastewater Treatment Plant, Garland, Texas, WPC-TEX-1076 (1973).

8. Wallace, A.T., "Analysis of Equalization Basins." *Journal Sanitary Engineering Division,* ASCE (December 1968).

9. Private communication with Dr. E. Robert Baumann, Iowa State University, Ames (11 December 1973).

10. *Sewer System Evaluation.* U.S. EPA, Office of Water Programs Operations (October 1973).

11. Private communication with Mrs. Ella Lindseth, city clerk, Dawson, Minnesota (November 1974).

12. "Process Design Summary," Garland, Texas (1974).

13. Smith, J.M., Masse, A.N., and Feige, W.A., "Upgrading Existing Wastewater Treatment Plants." presented at Vanderbilt University (18 September 1972).

14. *Operation and Maintenance Manual for Wastewater Treatment Plant, Walled Lake Arm, Huron-Rouge Sewage Disposal System.* Johnson & Anderson, Inc., Oakland County, Michigan: Department of Public Works (June 1973).

15. *Operation and Maintenance Manual for Sewage Retention Reservoir, Novi Trunk Extension No. 1, Huron-Rouge Sewage Disposal System.* Johnson & Anderson, Inc., Oakland County, Michigan: Department of Public Works (September 1973).

16. Grounds, H.C., and Mayerson, R.C., "Variable Volume Activated Sludge." Presented at 4th Annual Environmental Engineering and Science Conference, Louisville (4-5 March 1975).

CHAPTER 5

HEADWORKS COMPONENTS

5.1 Introduction

The components of a treatment plant upstream of, and providing pretreatment for, primary clarifiers, flocculators, equalization tanks, or biological units, are considered part of the headworks. Typical headworks components are wet wells and units for screening and comminuting, grit removal, grease and oil removal, and pumping.

These components provide preliminary treatment for wastewater to optimize the operation and performance of subsequent treatment processes. Headworks components discussed in this chapter relate to treatment of wastewater that is substantially domestic in origin. Industrial wastewater, it can be assumed, has been pretreated to such an extent that it can be treated as domestic wastewater without loss of plant efficiency. Federal reliability requirements (1) must be considered in selecting unit processes and equipment for wastewater pretreatment in the headworks.

Design criteria and calculation methodology for headworks components are given in several publications (1) (2) (3) (4) (5) (6) (7). Table 5-1 lists the units or processes commonly found in headworks and their functions. Under special circumstances, some functions may be combined in one unit.

TABLE 5-1

HEADWORKS UNITS

Units or Processes	Functions
Racks and bar screens	Strain out coarse wastewater solids
Communitors and grinders	Macerate and grind wastewater solids into smaller particles
Grit removal	Intercept and remove sand and grit
Skimming (aerated or unaerated)	Remove lighter-than-water particles (such as grease, oil, soap, wood, and garbage)
Preaeration	Add oxygen to wastewater, initiate natural flocculation, and control odors
Fine screens	Strain out smaller suspended organic matter
Pumping	Add sufficient head to wastewater for gravity flow through plant
Measuring devices	Determine influent flows
Sampling wells	Provide location to sample plant influent
Mixing tanks	Mix influent wastewater, recycled solids, effluents, or sidestreams and chemicals to achieve homogeneity throughout the wastewater

5.2 Racks, Bar Screens, and Comminutors

One process common to most treatment plant headworks is screening out larger solids (rags, pieces of wood, dead animals, etc.) that would be unsightly or cause difficulty in downstream processes. For small plants, the screening is usually accomplished by a hand-cleaned bar screen or two bar screens in parallel channels. Sometimes the bar screen is followed by comminution. If the comminutor is down for repair, or if peak flows exceed the comminutor's capacity, the bar screen may constitute the entire pretreatment.

In a bar screen 3/8 in. (10 mm) wide by 2 in. (50 mm) deep or larger, bars are welded to crossbars on the downstream side with a clear opening between bars of 1 to 1.75 in. (25 to 45 mm). The bars, raked by hand, should not be so long that they are inconvenient to clean. An easily drained floor (with closely placed drain holes) for temporarily storing the rakings should be placed downstream from the top of the screen. The average velocity of flow through the bar screen should be 1 ft/sec (0.3 m/s) or greater.

Mechanically cleaned racks are usually considered ill-suited for use in small plants. Their design is covered in references (4), (5), and (6).

Screenings from the racks or bar screens can be disposed of by hauling them to approved landfill areas that are designed and operated to protect groundwater from leachate pollution.

Comminution devices cut up the solids in the raw wastewater to prevent an adverse effect on the efficiency of later pumping and treatment processes. If grit removal is included, the comminution devices should follow grit removal, to protect their cutting surfaces. However, they should usually precede any pumping units, to protect the pumps from being clogged by rags and large objects.

Bar racks, channels, and screenings accumulations are often sources of odor problems, if the channel is not designed for easy and thorough cleaning. Daily "housekeeping" is usually required.

5.3 Grit Removal

Grit is the heavier suspended mineral matter in wastewater, consisting essentially of sand, gravel, and cinders. Grit usually contains eggshells, bone chips, seeds, coffee grounds, and larger organic particles, such as food particles that have passed through garbage disposals. Grit contains substances with specific gravities much greater than those of the normal putrescible and oxidizable organic material in wastewater.

Grit removal units should be included in the design of small wastewater treatment plants. These units are particularly important if the wastewater contains enough grit to cause faster deterioration and subsequent replacement of equipment such as pumps, centrifuges, and comminutors; to increase the frequency of cleaning of digesters; or to result in excessive

deposits in pipelines, channels, and tanks. Grit is usually removed in controlled velocity chambers, detritus tanks, or aerated grit chambers. Design criteria for these units are in references (1), (2), (4), (5), (6), and (7).

In smaller treatment plants, when grit removal has been necessary, manually cleaned parallel grit channels have been used in combination with a downstream control to maintain a uniform velocity of close to 1 ft/sec (0.3 m/s) through the grit channel. The velocity must be kept within a range that permits the heavier inorganic grit to settle while lighter organic solids are kept in suspension.

Care must be taken in selecting a downstream control for grit removal channels, to insure that the velocities are not excessive, particularly along the bottom of the channel during higher flows. Parshall flumes or Camp weirs provide such control. The Parshall flume is also commonly used to measure the influent flow. Proportional or Sutro weirs control the average approach velocity, but tend to cause excessive bottom velocities.

A detritus tank is a grit chamber in which the velocities permit an appreciable amount of organic matter to settle out with the grit. An aerated detritus tank, or aerated grit chamber, is a tank in which the organic matter, that would otherwise settle out, is maintained in suspension by rising air bubbles or some other form of agitation.

Aerated grit chambers have the following advantages:

1. Grit removed is clean enough for disposal without further treatment.
2. Variations in flow have little effect on the efficiency of grit removal.
3. The removal of grease, or other floatables, by flotation and skimming can be combined in one chamber with grit removal.
4. The chamber, because of its mixing capabilities, may provide a good location for chemical additions to improve plant solids and phosphorus removal and for odor control and prechlorination.
5. Preaeration adds DO to incoming wastewater, normally devoid of oxygen, before it is discharged to the next process.

The major disadvantage of aerated grit chambers for small treatment plants is that they require more operation and maintenance than do manually cleaned grit channels.

In general, grit removal efficiency depends primarily on surface area. The areas commonly used are listed in Table 5-2 (6).

5.4 Oil, Grease, and Floating Solids Removal

Oil, grease, resin, glue, and floating solids such as soap, vegetable debris, plastics, fruit skins, and pieces of cork and wood interfere with some processes and should be removed in the headworks, if large quantities are present in the raw wastewater. Aerated skimming tanks with detention times of about 3 minutes are commonly used for oil, grease, and floating solids removal. Air requirements are about 0.03 ft^3/gal (0.22 m^3/m^3) of wastewater for these units (3). References (3), (4), (5), (6), and (7) contain design criteria for these units.

TABLE 5-2

THEORETICAL MAXIMUM OVERFLOW RATES FOR GRIT CHAMBERS (6)

Size of Grit Particle		Overflow Rates[1] gpd/ft^2	
Approximate Screen Mesh	Diameter	Specific Gravity	
No.	mm	2.65	2.0
48	0.30	65,500	39,600
60	0.25	58,000	35,200
65	0.21	46,300	28,000
80	0.18	40,900	24,800
100	0.15	32,300	19,600

[1] Liquid temperature about 15° C.

Skimmings from these units are normally putrescent and may cause odor nuisances. Biodegradable solids of vegetable or animal origin may be discharged to sludge digestion units. Other types of skimmings (such as those containing mineral oils) may be buried with screenings. Skimming volumes usually vary from 0.1 to 6.0 ft^3/mil gal (6).

5.5 Preaeration

Preaeration of wastewater has been used throughout the United States for over 50 years to control odor in downstream units (aeration may cause odors by releasing H_2S gas) and to improve treatability of the wastewater. Short aeration periods, up to 15 minutes, have been found adequate for these purposes. For longer aeration periods, the additional benefits of grease separation and improved flocculation of solids have also been observed (8).

Although the use of aerated grit chambers is becoming increasingly popular as a pretreatment unit in wastewater treatment plants, they should not be expected to increase substantially BOD or SS removal during primary clarification, because of the relatively short detention times normally employed. Aerated grit chambers can be combined with preaeration if grit removal is limited to the upstream portion of the tank.

Preaeration is sometimes located in the distribution channels. With aeration in the channels, there are added benefits: absence of settled solids, even at reduced velocities, and uniform distribution of solids to multiple units.

The major parameters to be considered in the design of preaeration facilities are rate of air application and detention time. To maintain proper agitation, the air supply system should provide a range of 1.0 to 4.0 cfm/linear foot (0.0015 to 0.006 m^3/m·s) of tank or channel. This range will insure adequate performance for nearly all physical tank layouts and types of aeration equipment used, if there is more than 0.1 ft^3 of air supplied per gallon of wastewater (0.01 m^3/l).

Effective preaeration has been achieved at detention times of 45 minutes and less (8) (9). The Ten States Standards (2) recommend a detention time of 30 minutes for effective solids flocculation if inorganic chemicals are used in conjunction with preaeration. For appreciable BOD reduction, a minimum of 45 minutes is recommended. The use of polyelectrolytes may also affect these detention times.

5.6 Physical Screening

Physical screening can be defined as the removal of solids from the wastewater flow by a screening medium (such units have no appreciable thickness in the direction of flow). Screening units are also described in Chapters 6 and 11. Different types of coarse and fine screens are used to remove coarse material at the head of the plant or to remove SS as a part of, or in lieu of, primary treatment. Design criteria for screening units are presented in references (2), (3), (4), (5), (6), and (10).

In the past, fine screens used in wastewater plants were mechanically cleaned devices with openings 1/8 in. (3 mm) or less. Wedge wire screens are becoming accepted as efficient and economical devices for small treatment plants (10).

5.7 Pumping

Quite frequently, wastewater must be pumped from its point of entry to the treatment processes. Pumping facilities often form part of the headworks. The wet well is sometimes used as the point at which to recycle some plant influent or to add chemicals for odor control. Subsection 3.3 contains descriptions of design criteria and other aspects of pumping at small wastewater treatment plants.

5.8 Flow Measuring and Sampling

Means for efficient flow measuring and sampling must be considered by designers of small wastewater treatment facilities. The flow and time of day should be noted for all samples of wastewater taken. Locations in a treatment facility where flow measuring and sampling should be considered are plant influent, equalization tank effluent, recirculation streams, process sidestreams, sludge withdrawals from the wastewater treatment stream, and plant effluent.

Measuring devices used in small wastewater treatment plants include Parshall flumes, Palmer-Bowlus flumes, and weirs in open channels; venturi tubes, Dall tubes, orifices, nozzles, magnetic meters, and pipe bends in closed pipelines; and parabolic flumes, California pipes, and Kennison nozzles in pipes discharging freely to the atmosphere. Gravimetric and volumetric containers are used to calibrate flow-measuring devices and sometimes for regularly scheduled measuring on a fill-and-draw basis. Positive displacement pumps can be used to obtain relatively accurate measurements of sludge flow if they are calibrated on a regularly scheduled basis. Descriptions and design criteria for these devices can be found in references (4), (5), (6), and (11) and in manufacturers' catalogs and bulletins.

Factors interfering with one or more of the commonly used measuring devices are grease, floating solids, grit, SS, excessive variation in flow, and inadequate available heads. Flow velocities, through measuring devices, must be large enough to cause periodic scouring of any solids that have settled during time of low flow, but should never reach supercritical levels. Upstream conditions may influence flow measurement if flumes or weirs are used. The approach flow velocities must be less than critical under all conditions. Drops in the invert should be located far enough upstream from the open channel measuring device for the hydraulic jump and resulting turbulence to have been dissipated before the flow reaches the measuring device. Small pipelines under pressure, which might enter open channels ahead of flumes or weirs at supercritical velocity, can also cause erroneous measurement, if not located a sufficient distance upstream from the flume or weir. A straight reach should be provided far enough upstream for the incoming velocity distribution to become uniform across the entire rectangular cross-section at the entrance to the measuring device.

The difference between liquid levels upstream of a control and control elevation indicate the flow through a flume or weir. Liquid-level indicators commonly used are floats, pressure cells, electrical probes, and pneumatic tube bubblers. Conditions downstream of open channel measuring devices must be designed to avoid any backup of flow that will flood out the measuring device. With a separate float chamber, the float can be maintained satisfactorily by most operators. Floatless, liquid-level-indicating devices sometimes require servicing by manufacturers' representatives when they malfunction.

To measure raw wastewater and other open channel flows, prefabricated Parshall flume liners, with integral float chambers installed in concrete channels, are relatively trouble free. Palmer-Bowlus flumes are also prefabricated for installation in pipes or manholes (12). One type of flume carries an imbedded sensor-element, electronically providing information to relate water depth to flow rate. Installation of such a Palmer-Bowlus flume is shown in Figure 5-1. This monitor can also be used to provide an output for automatic control of treatment processes or sampling.

Adjustable-level V-notched weirs make good overflow and measuring devices from activated sludge-recirculating and flow-splitting boxes. Constant heads on these boxes can be maintained, using progressive cavity pumps or telescoping valves. The liquid-level indicator used here can be relatively trouble free if a separate float box is used.

Magnetic flow meters are expensive and difficult to maintain, but can measure accurately over a 10:1 flow range (larger than most) without interference from organic solids, if grease has been removed from the wastewater. To function most efficiently, however, they must be installed vertically with straight approaches. They are being used satisfactorily to measure return sludge at some small activated plants, but not for primary sludge, because of grease content.

There are many ways of measuring flows and sampling in a manhole with little, if any, loss of head. Stephenson and Oates (13) describe an arrangement using a V-notch weir, a float in a small stilling well, a recording meter, and a 24-hour composite sampler, all of which are shown in Figure 5-1.

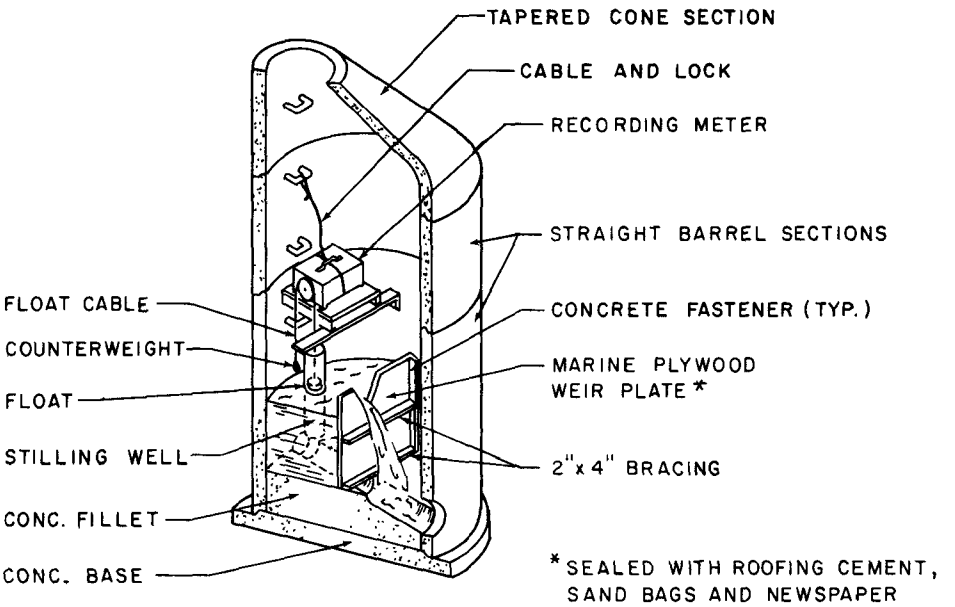

WEIR AND FLOW METER INSTALLATION (9)

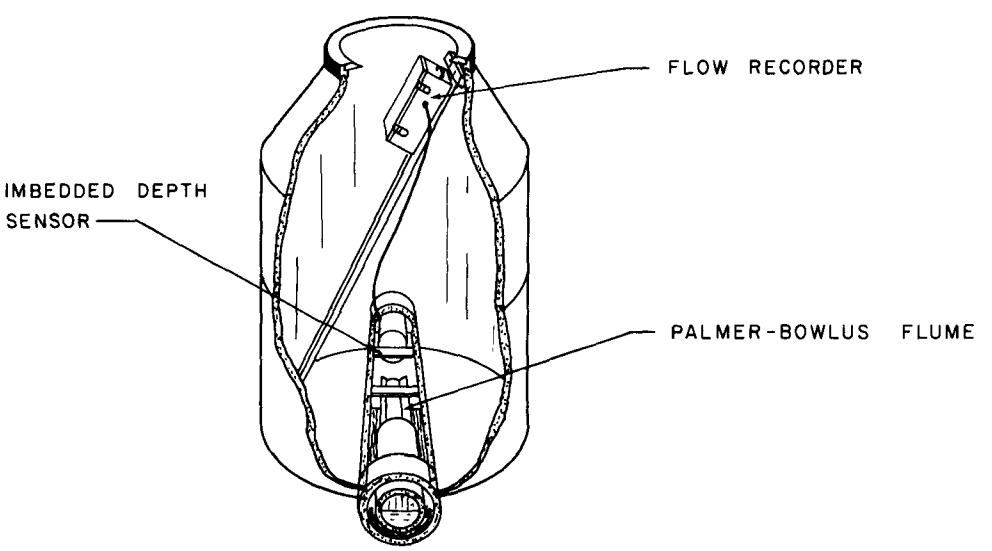

PALMER-BOWLUS FLUME AND FLOW METER INSTALLATION (13)

FIGURE 5-1

TYPICAL METERING AND SAMPLING INSTALLATIONS

Manhole installation of the Palmer-Bowlus flume is simple and efficient (5). This device is especially useful if flow measuring devices are to be added to existing facilities.

Many automatic sampling devices have proved to be satisfactory and have been developed and patented. The *Handbook for Monitoring Industrial Wastewater* (11) points out that obtaining good samples and the resulting analytical data depends on:

1. Insuring that the sample taken is truly representative of the liquid.
2. Using proper sampling techniques.
3. Protecting and preserving the samples until they are analyzed.

Sampling procedures are described in references (8) and (11).

5.9 Equalization Tanks

Equalization tanks are sometimes used for small treatment plants and can be included in the general category of headworks components. Methods used to equalize hydraulic and organic loadings on various processes are discussed in detail in Chapter 4.

5.10 Chemical Additives

Chemicals for disinfection, pH control, and odor control are sometimes added to the wastewater in the headworks. Chemicals may be dispersed by adding them to aerated grit chambers, aerated channels, hydraulic jumps, and pump suction lines. Design for chemical addition is discussed in Chapter 6.

5.11 References

1. *Design Criteria for Mechanical, Electric and Fluid System and Component Reliability.* U.S. EPA Technical Bulletin No. 430-99-74-001 (1973).

2. *Recommended Standards for Sewage Works.* Great Lakes-Upper Mississippi River Board of Sanitary Engineers (April 1973).

3. Fair, G.M., Geyer, J.C., and Okun, D.A., *Water and Wastewater Engineering.* New York: John Wiley & Sons (1968).

4. Babbitt, H.E., and Baumann, E.R., *Sewerage and Sewage Treatment.* New York: John Wiley & Sons (1958).

5. *Wastewater Engineering.* Metcalf and Eddy, New York: McGraw-Hill (1972).

6. *Wastewater Treatment Plant Design.* ASCE and WPCF Manual of Practice Nos. 36 and 8, respectively (1958).

7. *Seminar Papers on Wastewater Treatment and Disposal.* Boston SCE, sanitary section (1961).

8. Roe, F., "Preaeration and Air Flocculation." *Journal Water Pollution Control Federation,* 23, No. 2, pp. 127 to 140 (1951).

9. Seidel, H., and Baumann, E., "Effect of Preaeration on the Primary Treatment of Sewage." *Journal Water Pollution Control Federation,* 33, No. 4, pp. 339 to 355 (1961).

10. *Process Design Manual for Suspended Solids Removal.* U.S. EPA, Office of Technology Transfer, EPA-625/1-75-003a (January 1975).

11. *Handbook for Monitoring Industrial Wastewater.* U.S. EPA, Office of Technology Transfer, EPA-625/6-73-002 (August 1973).

12. Manufacturer's data, Universal Engineered Systems, Pleasanton, Calif. (1974).

13. Stephenson, R.L., and Oates, W.E., "Installation of Sampling Equipment in Manholes," WPCF *Deeds and Data* (January 1974).

CHAPTER 6

CLARIFICATION OF RAW WASTEWATER

6.1 General

A large portion of the BOD found in raw domestic wastewaters is in the form of suspended solids, part of which can be removed by plain sedimentation or, to a greater extent, by chemical coagulation, flocculation, and sedimentation. General design details and case studies of facilities best suited to accomplish this can be found in the *Process Design Manual for Suspended Solids Removal* (1) and the *Process Design Manual for Phosphorus Removal* (2). For additional information on the theory and design of chemical coagulation, flocculation, and clarification, refer to Chapters 12 and 14 and references (3) through (11).

6.2 Coagulation and Flocculation

Coagulation, as the term is used here, is the destabilization and initial agglomeration of colloidal or fine suspended matter by adding a floc-forming chemical. The jar test is the normal way to determine both the coagulant dosage required for optimum SS removal and the characteristics of the floc. This test attempts to simulate the full-scale coagulation-flocculation process in the laboratory. Test procedures may vary, depending on the type of equipment in the plant, but there are common elements. If the wastewater temperature varies appreciably, jar tests conducted at the lowest expected temperature should represent the most exacting conditions, because coagulation and settling are retarded by lower temperatures. If coagulants are used, they must be thoroughly dispersed by adequate mixing in the wastewater. To insure complete mixing, a rapid mix basin, equipped with mechanical mixers, is normally required. Adequate mixing can be accomplished in 10 to 30 seconds.

Flocculation is the agglomeration of colloidal particles after coagulation, accomplished by gentle stirring, using either mechanical or hydraulic means. The mixing, provided in a rapid mixing basin, will promote particle collision but is much too intense to promote flocculation. The design of the flocculation basin and the characteristics of the chemically treated particles will determine the limiting size and the settling characteristics of the floc. Velocity gradients in the flocculation basin promote particle collision and growth. These growing flocculent particles, however, are fragile and increasingly subject to rupture by sheer force of the velocity gradient. A typical turbine-type flocculator is shown in Figure 6-1.

The peripheral speed of any agitator in a flocculation basin should generally not exceed 2 ft/sec (0.6 m/s), and a variable speed drive should be provided so the speed can be adjusted to 0.5 ft/sec (0.15 m/s). More detail on the design requirements for efficient flocculation is presented in reference (1).

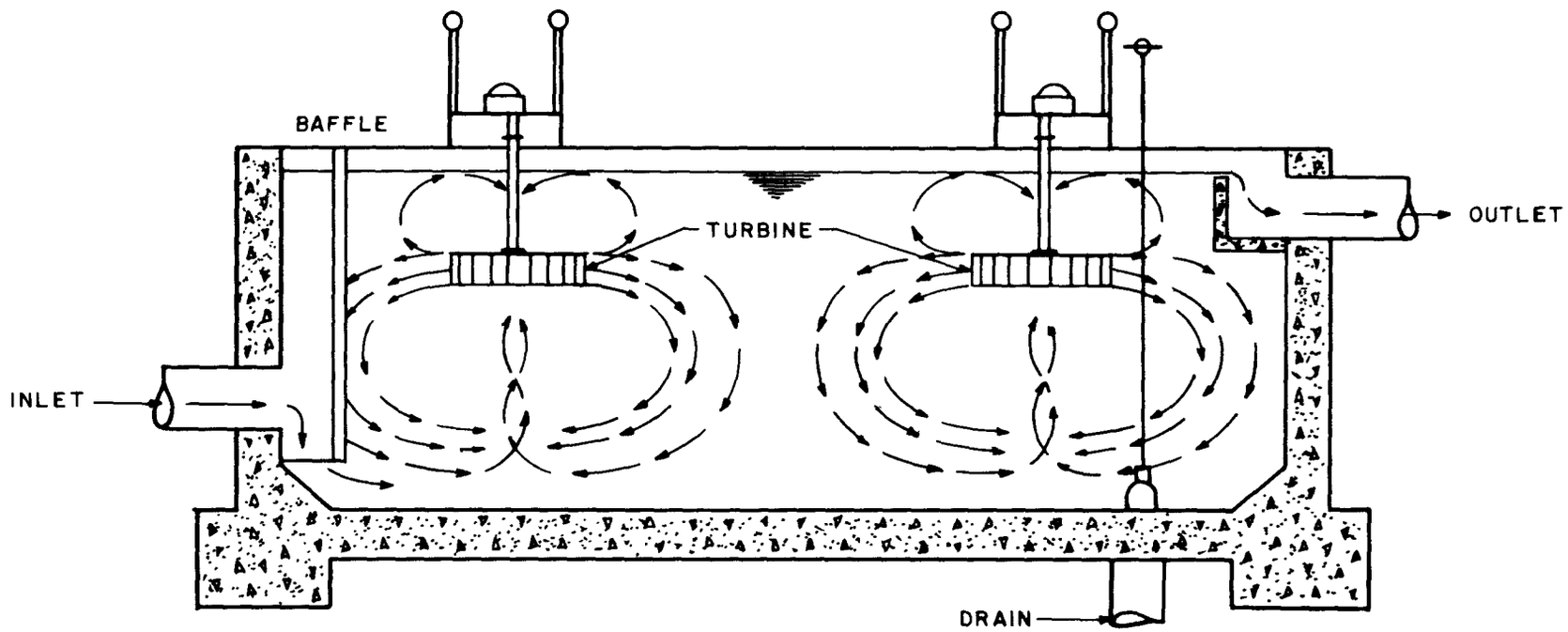

FIGURE 6-1

TURBINE-TYPE FLOCCULATORS

6.3 Solids-Contact Treatment

As far as complete utilization of added chemicals, such as alum, iron salts, and lime, is concerned, it has been found beneficial to continue chemical addition, mixing, and flocculation simultaneously, in the presence of previously precipitated solids (3). This procedure is usually practiced with specially designed systems in which clarification takes place in a single integral structure (called a solids-contact treatment unit), as shown in Figure 6-2. Solids-contact treatment can also be simulated by recycling settled sludge from the clarifier to the rapid mixing basin in a conventional clarification sequence. However, as high a concentration of solids cannot be maintained in this manner as in an integral solids-contact unit. Solids-contact treatment is especially beneficial if lime is used for phosphate precipitation, because it decreases the tendency for supersaturation and subsequent deposition on equipment and conduit surfaces, which can be quite severe with treatment at high pH.

6.4 Sedimentation

Quiescent conditions must be maintained for sedimentation units to be effective. Gravity sedimentation is universally used to obtain primary separation of SS from wastewaters and also to separate biological and chemical flocs produced in various treatment processes. Although dissolved air flotation has been employed for primary clarification, the effluent SS, in general, are higher than that from gravity units. Using these units to separate chemical flocs has shown promise but has not yet been adopted in municipal treatment. Flotation has proved both technically and economically effective for sludge thickening at larger treatment plants. Some treatment plant designs have omitted primary settling. This may be advantageous, if one or more of the following conditions apply (12):

1. Sludge from the facility is to be treated away from the facility.
2. Aerobic digestion or extended aeration processes are to be used.

If it is possible to eliminate primary settling, the following benefits may be achieved:

1. The construction, operation, and maintenance costs of primary clarification are eliminated.
2. The total dry weight of the sludge removed is reduced.
3. The activated sludge solids settle faster.
4. The potential source of odor is removed.

The primary clarifier is usually needed prior to trickling filters and rotating biological contactors (RBC) to avoid clogging problems from floating objects, oils, greases, and the larger SS. In some newer installations, wedge wire screens have been successfully employed in lieu of primary clarifiers. If the primary clarifier is followed by biological treatment and secondary clarification, it is usually not necessary to remove the finer SS in the primary settling tank, making increased overflow rates permissible. If the wastewater contains larger-than-average amounts of grease and oil, an aerated grit chamber, followed by a quiescent grease removal unit, may be used instead of a primary clarifier equipped to remove floating solids. Wastewater treatment ponds and oxidation ditches do not require primary clarifiers.

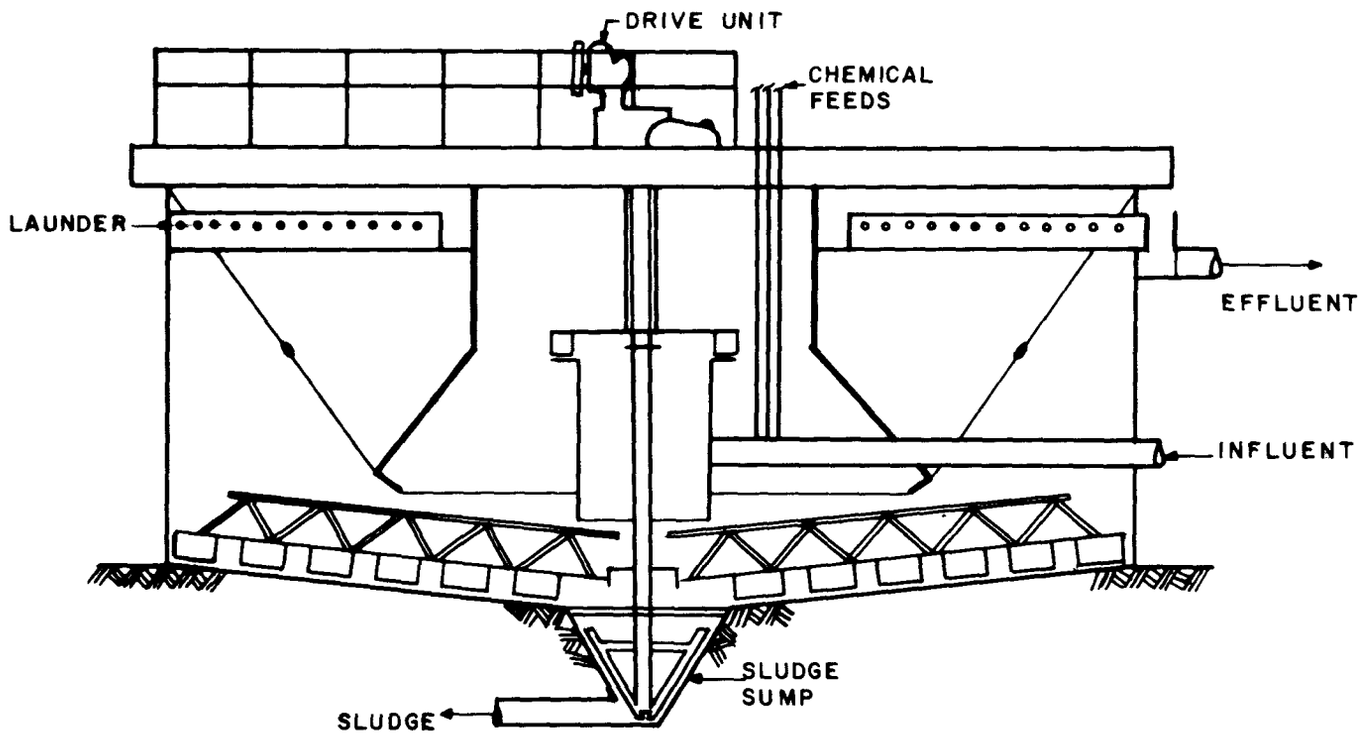

FIGURE 6-2

SOLIDS-CONTACT TREATMENT UNIT

6.4.1 Basis of Design

Analysis of the ideal settling basin shows that its area should be equal to:

$$A = Q/v_s$$

where Q = flow through, ft^3/min (m^3/s)
v_s = settling velocity of particles to be removed, ft/min (m/s)
A = surface area, ft^2 (m^2)

Thus, the basic parameter controlling the size and performance of a settling basin is the settling velocity of the individual particles to be removed. In the case of a concentrated suspension, such as activated sludge mixed liquor, this parameter is the initial settling velocity of the suspension, before the proximity of the particles slow their subsidence (7). Refer to Chapter 7 for design of secondary clarifiers.

The settling rate of particles depends on their size, shape, and density, and on liquid temperature. The liquid temperature has a very significant influence: settling velocity can be 12 ft/min (62 mm/s) at 25° C or 6.5 ft/min (33 mm/s) at 5° C, because of the significant changes in the density and viscosity over this temperature range.

Concentrated suspensions, present in activated sludge mixed liquor, or the slurry in a solids-contact treatment unit, settle as a mass of particles and leave a distinct interface between the floc and supernatant. The settling occurs as shown in Figure 6-3 and has three zones (6) (13). During the initial period, the floc settles at a uniform rate under conditions of hindered settling. The magnitude of this velocity depends on the initial solids concentration. The next zone is a transition zone in which the settling velocity decreases continually. Finally, there is a compression or thickening zone. The initial settling velocity for any given set of conditions is important, because it determines what the maximum hydraulic overflow rate can theoretically be before the sludge blanket in a clarifier might expand and eventually overflow (6) (13).

6.4.2 Basin Design

In raw domestic wastewater, the range of particle sizes in suspension is very broad. Experience has indicated that about 50 to 60 percent of the SS can be removed in reasonably sized settling basins. It is customary to size such primary basins for an upflow velocity or overflow rate. Both the upflow velocity and the overflow rate are equal to Q/A gpd/ft^2 (0.04 $m^3/m^2 \cdot d$). The peak overflow rate may be 2,500 to 3,000 gpd/ft^2 (100 to 120 $m^3/m^2 \cdot d$) for primary clarifiers followed by biological treatment processes (1). If the flow is extremely variable, as may be the case in small plants, the tank should be designed on the basis of a peak overflow rate of less than 2,000 to 2,500 gpd/ft^2 (80 to 100 $m^3/m^2 \cdot d$). If waste-activated sludge is returned to the primary clarifier, the peak overflow rate should be reduced to about, 1,200 to 1,500 gpd/ft^2 (48 to 60 $m^3/m^2 \cdot d$) (1).

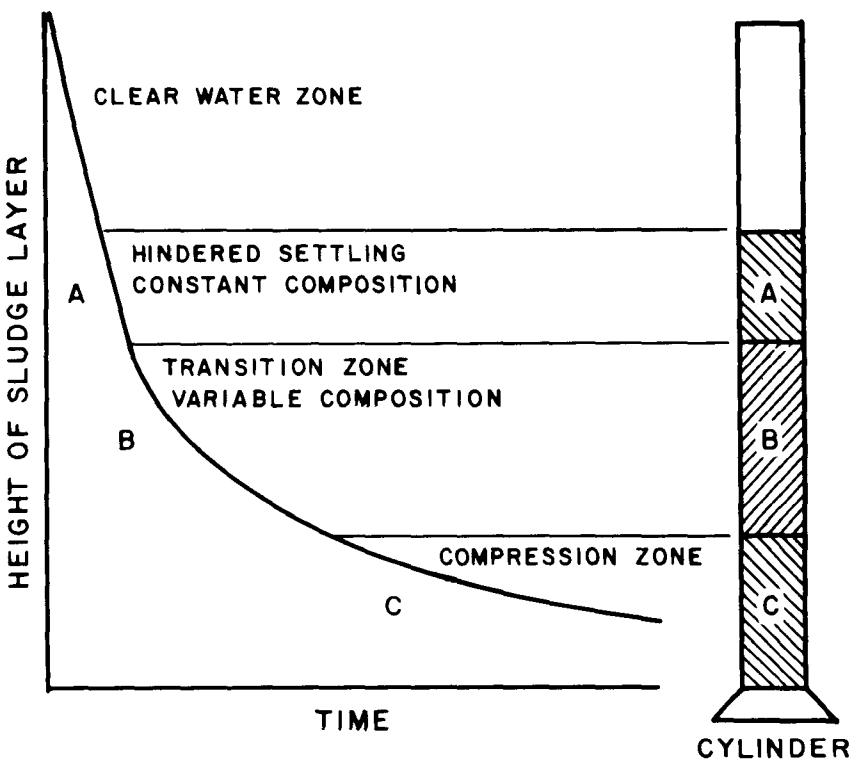

FIGURE 6-3

SCHEMATIC REPRESENTATION OF SETTLING ZONES

Although basin depth is not considered in the analysis of the ideal basin, in practice it plays an important role. A certain depth is needed to store settled solids, because they are not removed as soon as they are deposited on the bottom, and depth must be provided to accomplish some thickening. The depth also determines the detention time, which should be at least 120 minutes, to allow possible flocculation to take place. In addition, the flow-through velocity must be kept low, to insure that solids settling on the bottom are not scoured up. The maximum horizontal velocities allowable near the sludge layer in a primary clarifier are on the order of 4 to 5 fpm (0.02 to 0.025 m/s) to prevent possible resuspension of settled solids (2) (5). Because the effluent takeoff point is quite localized, high upflow velocities approaching the overflow weir can transport solids, if sufficient depth is not provided between the sludge blanket or solids on the basin bottom and the overflow weir. Although weir loading (expressed as gpd/ft) is frequently specified, it is not an independent parameter, because higher loadings can be compensated for by deeper basins.

Clarifiers handling chemical flocs, such as from aluminum or iron coagulants, should be designed for peak overflow rates no longer than 600 and 800 gpd/ft^2 (24 and 32 m^3/m^2·d), respectively. With lime treatment, these peak loadings can be as high as 1,600 gpd/ft^2 (64 m^3/m^2·d), if good coagulation is obtained. For uniform dispersion of the influent to the sedimentation unit, orifices placed in walls at the inlets should be sized to produce velocities on the order of 0.5 to 1.0 fps (0.15 to 0.3 m/s). Orifices passing wastewater containing floc should not be smaller than about 0.3 to 0.5 in. (7.5 to 12.5 mm), to minimize floc breakup (2).

6.4.3 Basin Types

Settling basins can be characterized by the predominant direction of flow, horizontal or vertical, from inlet to outlet. Horizontal flow basins can be either rectangular or circular, as shown in Figure 6-2. However, some clarifiers (similar to those shown in Figures 6-4 and 6-5) may have flows that are both horizontal and vertical, by placing effluent launders at points other than at the periphery or the end of the basin.

Both rectangular and circular units have been used for primary settling and final settling basins. Rectangular tank length-to-width ratios should be greater than 4:1, to reduce possible short circuiting. Choice is frequently based on space, construction, costs of multiple units, and preferences relating to sludge-thickening and removal arrangements. For treatment works with flows less than 1 mgd (0.044 m^3/s), circular primary tanks are generally more economical than rectangular tanks. A discussion of relative economics of construction and other design factors can be found in reference (1).

6.4.4 Removal of Sludge and Skimmings

Most of the equipment installed in gravity settling basins is used to remove settled and floating oil, grease, or other debris. Standard equipment for circular basins consists of at least two revolving radial arms with attached angled scrapers, which move settled solids to a central sump (shown in Figure 6-6). For rectangular basins, the usual mechanism consists of a chain and flight collector (shown in Figure 6-4), which move settled solids to a sump at the inlet end.

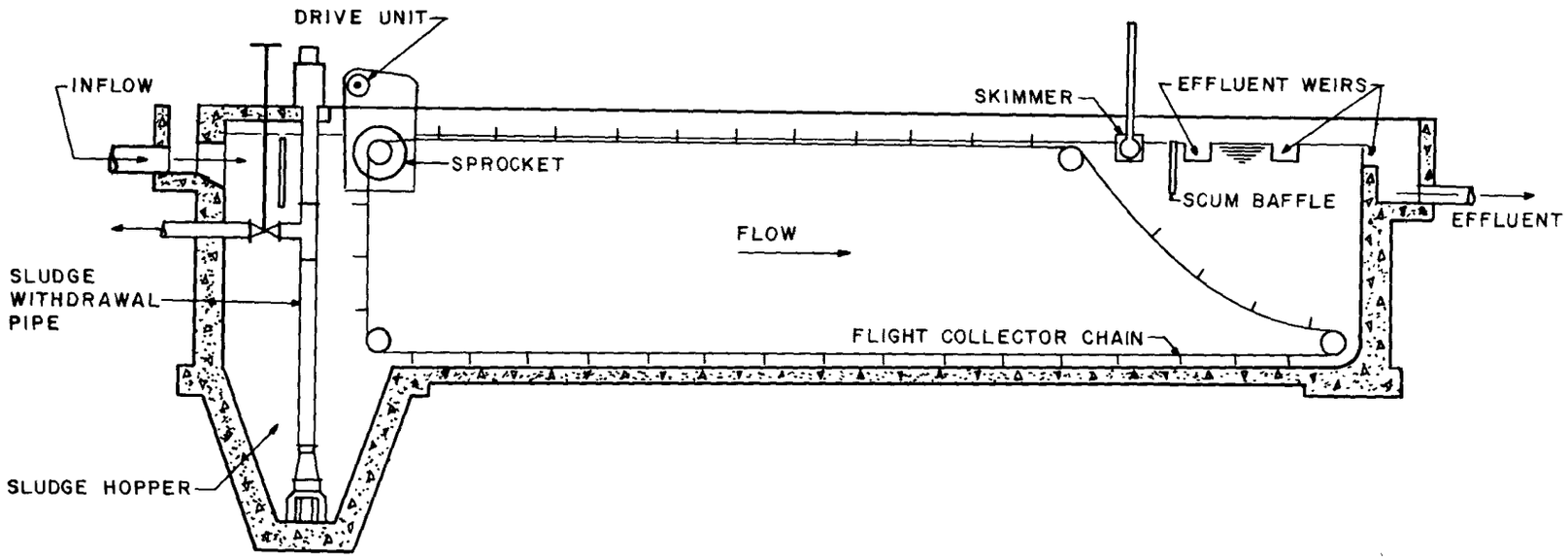

FIGURE 6-4

RECTANGULAR CLARIFIER WITH CHAIN AND FLIGHT SLUDGE COLLECTOR

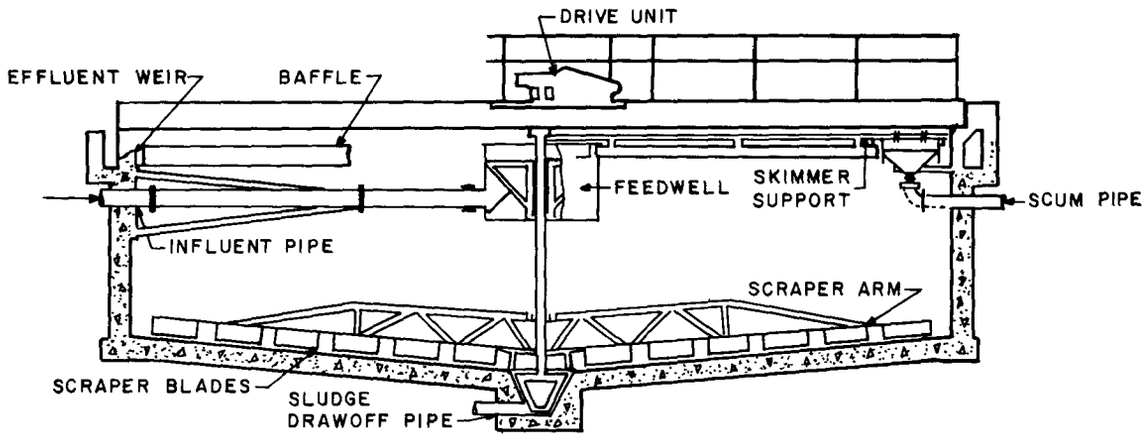

FIGURE 6-5

CIRCULAR CLARIFIER WITH SKIMMER

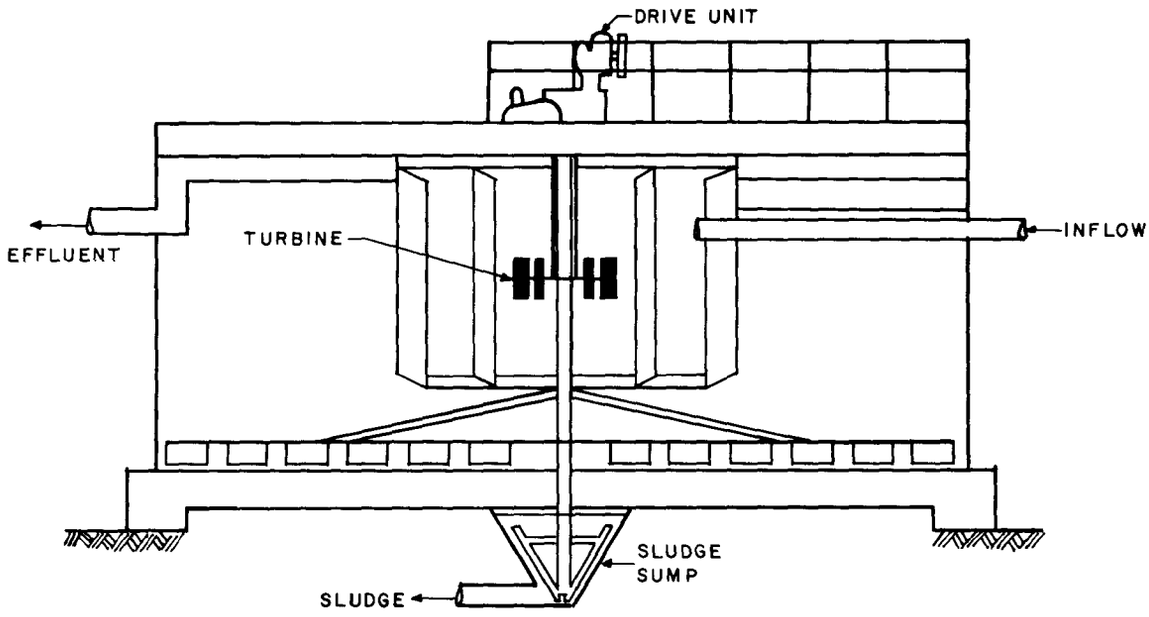

FIGURE 6-6

CIRCULAR CLARIFIER WITH INNER FLOCCULATION COMPARTMENT

A sludge collector for a circular basin (used to move skimmings toward their discharge point) consists of a radial arm connected to a submerged plate, with an attached flexible sweeper, which rides on a sloping bottom pushing the sludge to a sump from which it is pumped to the sludge processing system.

In circular units, sludge sump solids can be stirred gently by a blade attached to the scraper mechanism, thus combining the processes of sludge thickening and keeping the thixotropic sludge fluid enough to be discharged by gravity or pumping. Uusally, this removal is done on a timed cycle. Similar stirring of sump contents is not normally possible in rectangular units, and problems with sludge "hang-up" have been encountered in rectangular tanks used as primary clarifier units.

Sludge collector mechanisms for circular tanks are usually lower in cost and require less maintenance than chain and flight collectors for comparable rectangular units; hence, traveling bridge (instead of chain and flight) collectors have been developed and used extensively in Europe for rectangular basins handling flows greater than about 1 mgd (0.044 m^3/s). Recently, they have come into use in the United States but not for small treatment plants.

Although secondary clarifiers for trickling filter plants can be similar to those used for primary settling plants, secondary clarifiers for activated sludge plants will require special consideration. Refer to chapters 7 and 9 for the design of secondary clarifiers for small plants.

Thickened sludge concentration obtained from a primary clarifier without chemical treatment will be approximately 3 to 6 percent by weight, while the average volume will be 0.3 to 0.5 percent of the raw wastewater flow.

6.5 References

1. *Process Design Manual for Suspended Solids Removal.* U.S. EPA, Office of Technology Transfer (January 1975).

2. *Process Design Manual for Phosphorous Removal.* U.S. EPA, Office of Technology Transfer (April 1976).

3. O'Melis, C.R., "Coagulation in Water and Wastewater Treatment." *Water Quality Improvement by Physical and Chemical Processes.* E.F. Gloyna and W.W. Eckenfelder, University of Texas Press (1968).

4. Camp, T.R., *Flocculation and Flocculation Basins.* Transactions ASCE (1955).

5. Kalinski, A.A., "Solids-Contact Units for Water Treatment. *Civil Engineering* (December 1960).

6. Black, A.P., Buswell, A.M., Eidsness, F.A., and Black, A.L., "Review of the Jar Test." *Journal American Wastewater Association,* vol. 49, p. 1414 (1957).

7. Camp, T.R., *Sedimentation and Design of Settling Tanks.* Transactions ASCE, vol. 111, p. 895 (1946).

8. Kalinske, A.A., *Settling Rate of Suspensions in Solids-Contact Units.* Proceedings ASCE, vol. 79, p. 1 (1953).

9. Culp, G.L., Hsiung, K., and Conley, W.R., "Tube Clarification Process, Operating Experiences." *Journal Sanitary Engineering Division* ASCE, p. 829 (October 1969).

10. Kalinske, A.A., "Settling Characteristics of Suspensions in Water Treatment Process." *Journal American Wastewater Association,* vol. 40, p. 113 (February 1948).

11. *Recommended Standards for Sewage Works.* Great Lakes-Upper Mississippi River Board of Sanitary Engineers (1973).

12. Von Der Emde, W., "To What Extent Are Primary Tanks Required?" *Water Research,* vol. 6, pp. 395 (1972).

13. *Package Sewage Treatment Plants Criteria Development, Part 1: Extended Aeration.* National Sanitation Foundation, FWPCA Grant Project Report No. WPD-74 (September 1966).

CHAPTER 7

ACTIVATED SLUDGE

7.1 Introduction

Activated sludge has become the most versatile biological process available to the designer of wastewater treatment plants. The activated sludge process, designed for large communities and some preengineered (package) plants in small communities, has been successfully employed for decades in the United States. EPA's *Municipal Waste Facilities Inventory* (August 1974) lists over 3,000 activated sludge plants, with design flows of less than 1 mgd, serving about 6,500,000 people in the United States. Package plants for use in smaller communities are discussed in Chapter 8.

7.2 Description of Basic Processes

7.2.1 Definitions

Definitions of terms used in describing the activated sludge processes are listed below:

F/M_V Food-to-micro-organism ratio, or process loading factor; pounds of fresh BOD_5 applied to the activated sludge system per day per pound of MLVSS in the aeration basin, lb BOD/day/lb MLVSS.

MLSS Mixed liquor suspended solids; suspended solids in the aerator mixed liquor, mg/l.

MLVSS Mixed liquor volatile suspended solids; volatile suspended solids in the aerator mixed liquor, mg/l.

SRT Sludge retention time; total pounds of MLVSS in the aerator per pound of VSS wasted per day (or net solids produced), days.

SCFM Standard cubic foot of gas, measured at a dry pressure of 1.0 atmosphere (10.13 kPa) and 20° C.

SVI Sludge volume index; volume in millimeters occupied by 1 gram of activated sludge, after settling the aerated mixed liquor for 30 minutes in a 1,000-ml graduated cylinder.

$$SVI = (\text{ml settled sludge} \times 1{,}000)/(\text{mg/l SS})$$

ISV Initial settling velocity of aerator-mixed liquor, determined after a few minutes of settling in the settleometer test (1).

Completely mixed—Solids throughout a fluid, including the effluent, are homogeneous.

Plug flow—Particles in the influent pass through the system as a group or plug in the same period of time.

7.2.2 Symbols

Symbols for terms used in this chapter are as follows:

Q	Average design (24-hr) flow, gpd.
V	Aeration tank volume, ft^3.
L_i	Primary effluent (to aerator) BOD_5, mg/l.
L_e	Aerator effluent BOD_5, mg/l
F	Total BOD_5 applied to the activated sludge process; $8.34\ (Q)(L_i - L_e)/10^6$, lb/day.
F_e	Clarifier effluent BOD_5, lb/day.
F_s	Clarifier sludge BOD_5 wasted, lb/day.
S	Primary effluent (to aerator) SS, mg/l.
S_i	Primary effluent (to aerator) VSS, mg/l.
S_e	Clarifier effluent SS, mg/l.
S_v	Clarifier effluent VSS, mg/l.
C_c	Clarifier settled solids, mg/l.
C_v	Clarifier volatile settled solids, mg/l.
M	Total aerator MLSS, lb.
M_v	Total aerator MLVSS, lb.
M_e	Clarifier effluent SS, lb/day.
M_w	Excess VSS produced, lb/day (see Figure 7-1).
M_s	Excess SS produced, lb/day (see Figure 7-1).
O	Oxygen required, lb/day/BOD_5 removed, lb/day.
O_R	Oxygen required, lb.
t_a	Aerator retention time.

R Recycle ratio, Q/Q_R.

Q_R Recycle flow, gpd.

7.2.3 Conventional Activated Sludge

"Activated sludge" describes a continuous flow, biological treatment system characterized by a suspension of aerobic micro-organisms, maintained in a relatively homogeneous state by the mixing and turbulence induced in conjunction with the aeration process. These conditions are in contrast to those in processes characterized by fixed growths of micro-organisms attached to solid surfaces, such as trickling filters (see Chapter 9).

Basically, the activated sludge process uses micro-organisms in suspension to oxidize soluble and colloidal organics in the presence of molecular oxygen. During the oxidation process, a portion of the organic material is synthesized into new cells. A part of the synthesized cells then undergo auto-oxidation (self-oxidation, or endogenous respiration) in the aeration tank. Oxygen is required to support the synthesis and auto-oxidation reactions. To operate the process on a continuous basis, the solids generated must be separated in a clarifier; the major portion is recycled to the aeration tank and the excess sludge is withdrawn from the clarifier underflow for additional handling and disposal (2). The two basic units in an activated sludge system are the aerator and the clarifier. In a conventional system (as shown on Figure 7-1) the primary effluent and the return sludge enter one end of a rectangular tank (length-to-width ratio of 5:1 to 50:1), move turbulently through the aerated chamber in a substantially plug-type flow, and are discharged as a treated mixture at the other end.

In the activated sludge process, several biological, physical, and chemical subprocesses influence the total performance of the treatment system. These subprocesses are:

1. Dissolution of oxygen into liquid.
2. Turbulent mixing.
3. Absorption of organic substrate by the activated floc.
4. Molecular diffusion of dissolved oxygen and soluble substrate (nutrients) into the activated floc.
5. Basic metabolism of micro-organisms (cell synthesis).
6. Bioflocculation, resulting from the production of exocellular polymeric substances during the endogenous respiration phase.
7. Endogenous respiration of microbial cells.
8. Release of CO_2 from the active cell mass.
9. Lysis, or decomposition of dead microbial cells.

Because of the interaction of the above subprocesses and because more than one of these processes can be altered by some external change (e.g., the intensity of mixing), the exact cause-effect relations are frequently obscured. A temperature change can affect all the subprocesses to some extent.

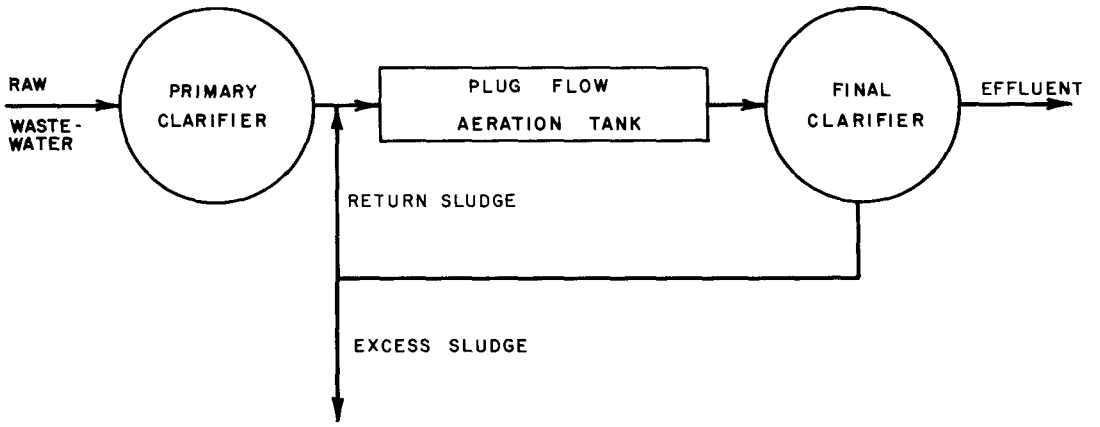

FIGURE 7-1

CONVENTIONAL ACTIVATED SLUDGE SYSTEM

The heterogeneous nature of the microorganism population in the activated sludge biomass—with different metabolic rates and optimum microenvironmental conditions for the different organisms—makes the entire process exceedingly complex. Furthermore, if the process is applied to domestic wastewater treatment, the organic and hydraulic loads on the system change continually; a true steady state is nonexistent in full-scale plants.

The following factors are essential in the design and use of a conventional activated sludge plant (1):

1. If the wastewater is mixed with a portion of the secondary clarifier sludge and aerated for a period of 6 to 8 hr (based on the average design flow), the rate of sludge returned to the aerator (expressed as a percentage of the average wastewater design flow) is normally about 25 percent, with minimum and maximum rates of 15 to 75 percent.
2. The normal organic loading rate for conventional activated sludge (expressed as F/M_v) should be about 0.4 to 0.6 lb BOD_5/day/lb MLVSS in the aerator, or 0.2 to 0.4 lb BOD_5/day/lb MLSS (expressed as F/M).
3. Volumetric BOD_5 loadings are usually 20 to 40 lb/day/1,000 ft^3 of aerator volume (320 to 640 kg/1,000 $m^3 \cdot d$).
4. The SRT should be sufficient to complete removal of the organic wastes and to enable the microbial cells to improve in settleability. SRT's range between 5 and 15 days, normally achieving 85 to 95 percent BOD_5 removal, with proper operation.
5. Initial oxygen demand in the head end of the aeration tank is high, and diminishes toward the outlet. This can be matched by tapering the air supply.
6. Because of the extreme variations in hydraulic and organic loadings common with wastewater from small communities, there may be less operational stability than in extended aeration units.

7.3 Modifications for Small Communities

7.3.1 General

The wastewater flow and organic content from the average small community will vary greatly during each 24-hr period, making some activated sludge treatment processes less dependable than others.

In a completely mixed system, the entire biomass is subjected to any increase in BOD shock loading or toxicity. In a plug-flow system, the biomass near the entrance initially receives the full impact of an increase in BOD or toxicity.

The biomass in activated sludge systems will normally have an oxygen uptake rate of 50 to 100 mg/l/hr, depending on the concentration of MLVSS. If a sudden increase in BOD_5 load increases this uptake rate by 10 mg/l/hr when the DO level in the aeration basin is 6 mg/l, the DO will drop to 0 in 30 minutes; if the DO is maintained at 2 mg/1, it will drop to 0 in 12 minutes.

A study comparing completely mixed and plug flows was made at Freeport, Illinois (3). This study was done with full-scale, parallel systems. The report on the study concludes:

> An inherent difference in the biological environment in completely mixed and plug-flow systems is the uniform substrate composition throughout the completely mixed system compared with the variable concentration in the plug-flow system. At the head of the plug-flow system the influent is dispersed in only a small part of the tank volume into which return sludge is added. Not only is the F/M ratio high in the head of the plug-flow system but the return sludge organisms face another shock situation inasmuch as they are coming from the region of the system in which substrate concentration is not only the lowest but of different character than that presented by the influent.
>
> On the basis of the data developed it can be concluded that the completely mixed system does provide for improved treatment during periods of extreme shock loads involving a decreased detention time and increased organic load.

The (essentially) completely mixed activated sludge systems now commonly used to treat wastewater from small communities are 1) extended aeration (low loading rate), 2) oxidation ditch (low loading rate), 3) contact stabilization (high loading rate), and 4) completely mixed (high loading rate).

Information in this chapter is confined to design of activated sludge aeration and clarifier units for small communities. The general characteristics distinguishing pertinent activated sludge systems are summarized in sections 7.3.2 through 7.3.6.

7.3.2 Extended Aeration System

This system (illustrated on Figure 7-2) operates in the endogenous respiration phase of the bacterial growth cycle, which occurs when the BOD loading is so low that organisms are starved and undergo partial auto-oxidation. The loading (F/M_v) is the low rate range,

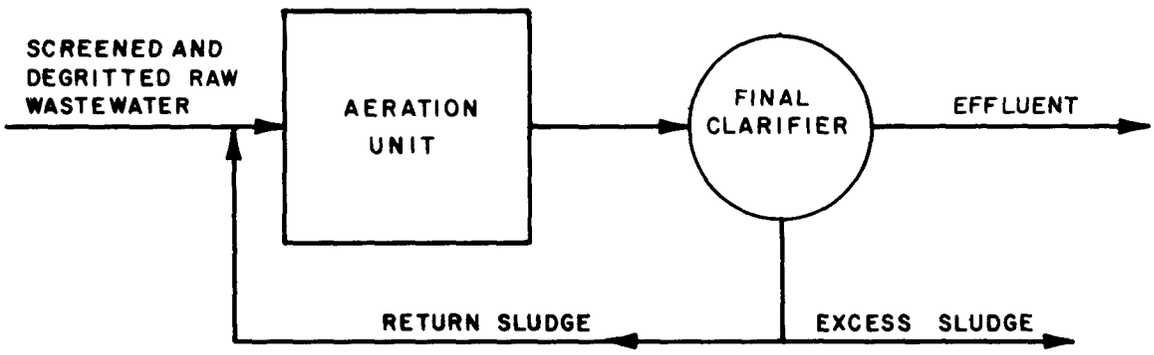

FIGURE 7-2

EXTENDED AERATION ACTIVATED SLUDGE SYSTEM

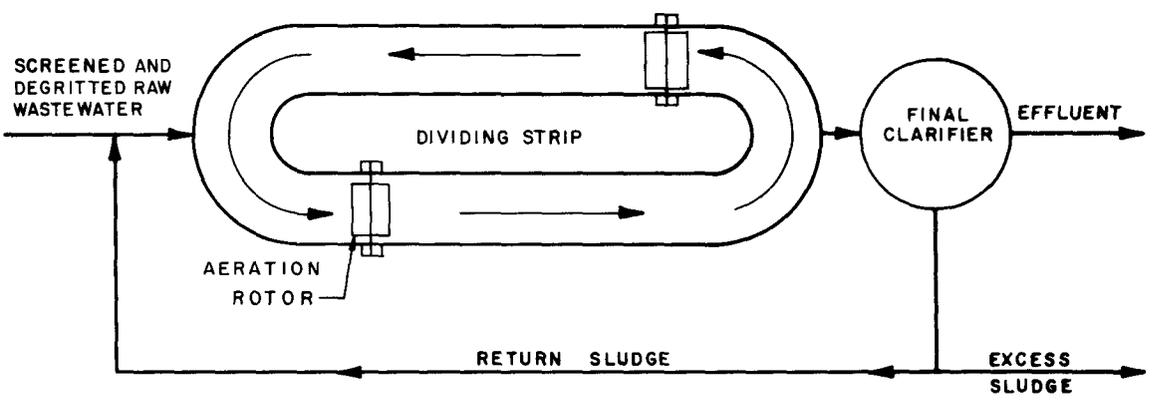

FIGURE 7-3

OXIDATION DITCH ACTIVATED SLUDGE SYSTEM

about 0.05 to 0.15 lb of BOD/lb of MLVSS/day. Because of the oxidation of more volatile solids during the long sludge retention time, the waste sludge production is relatively low. The MLSS ranges from 3,000 to 5,000 mg/l. The hydraulic retention time in the aeration basin is about 24 hr. In cold climates at such long retention times, the temperature of the liquid can drop to below 40° F (5° C), with a resultant slowing down of bacterial activity. It is customary to omit the primary clarifier in these systems, to simplify and reduce the waste sludge handling arrangements.

7.3.3 Oxidation Ditches

This system (illustrated in Figure 7-3) was originally developed in the Netherlands for the extended aeration process in small towns. It consists of a continuous channel, usually in the form of an oval "racetrack" or ring, with an aeration rotor or rotors, revolving on a horizontal shaft, which supply oxygen by intense surface agitation and also impart motion to the liquid around the channel (4). There are over 100 installations in the United States, many in the northern part of the country. They are considered to be a low rate system with a completely mixed flow.

For an oxidation ditch to function satisfactorily, the velocity gradients and DO's in all parts of the ditch should be relatively constant. Horizontal aerators tend to create more turbulence at the surface than near the bottom. In rectangular (more so than in trapezoidal) channels, means must be employed to prevent eddies and sludge settling next to the inner wall immediately after a 180° bend. Using turning vanes on the bends or placing the horizontal aerators immediately after the bend can prevent the settling. To maintain a relatively uniform DO, the velocity in the channels should insure that the travel time between aerators is no more than 3 to 4 minutes.

The primary clarifier is usually omitted in these installations; the wastewater is only screened and degritted before aeration. The MLSS in the ditch is usually about 3,000 to 5,000 mg/l, and the hydraulic retention time is about 24 hr for domestic wastewater. A final clarifier follows the ditch, with the sludge recycled to a point ahead of the aerating rotor, where the raw wastewater also enters.

A system somewhat similar to the oxidation ditch has been recently introduced in the United States from South Africa. Known as the "orbal system," it consists of several interconnected channels in a concentric arrangement. Aeration and liquid movement along the orbal system channels are obtained by perforated vertical disks, submerged for about 40 percent of their diameter, rotating on a horizontal shaft.

Another alternative oxidation ditch system from the Netherlands is the Carousel system, shown in Figure 7-4. The volumetric loading of the aeration units in these systems is about 30 lb BOD_5 per 1,000 ft^3 (480 kg/1,000 m^3). A vertical shaft, surface-type mechanical aerator is employed for aeration and to impart a spiral flow through the channels. The depth of the channel should be greater than the diameter of the aerator up to about 9 to 10 ft. About 0.6 lb/day (0.27 kg/day) of dry solids are produced per lb of BOD_5 removed.

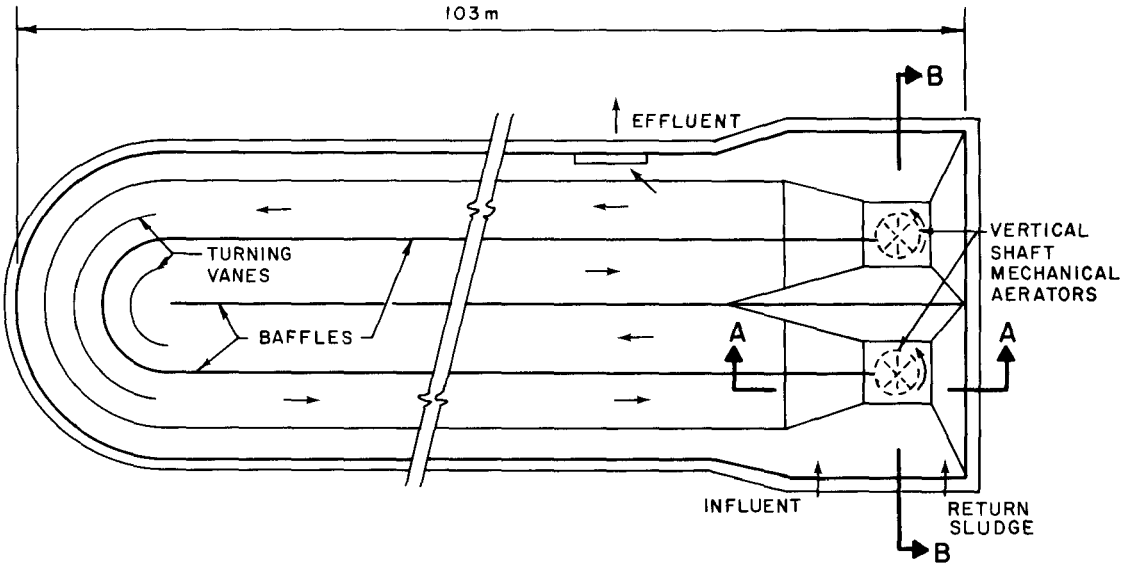

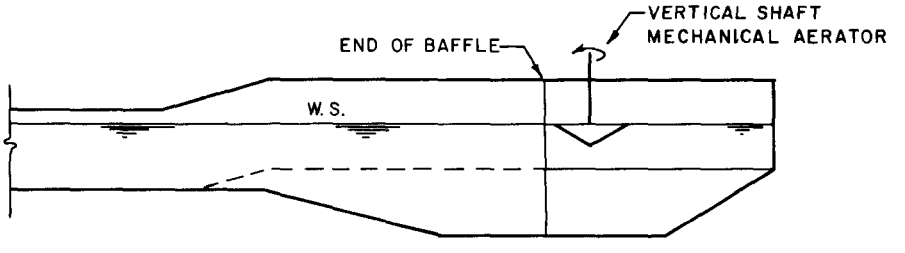

SECTION A-A

N.T.S

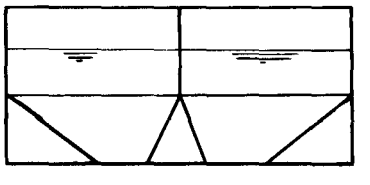

SECTION B-B

N.T.S.

FIGURE 7-4

CAROUSEL OXIDATION DITCH AT OOSTERWOLD, THE NETHERLANDS

7.3.4 Contact Stabilization System

This system is adapted to wastewaters that have an appreciable amount of BOD in the form of suspended and colloidal solids. The highly adsorptive properties of activated sludge are used to physically adsorb the suspended and colloidal solids upon the activated sludge in a short contact period. (The flow diagram is shown in Figure 7-5.) Primary settling may be omitted, but an equalization unit may be necessary for reliable performance, if the ratio of peak to minimum flow is greater than about 3:1 or 4:1, as is expected from smaller communities. The raw wastewater is contacted with aerated sludge in a contact basin and completely mixed and aerated. Suspended, colloidal, and some dissolved organics are adsorbed on the activated sludge, in an average hydraulic retention time of 20 to 40 minutes. The sludge is then settled and returned to a stabilization (reaeration) basin with a retention time of 4 to 8 hr, based on the sludge flow. For very small or package plants, the retention time in the stabilization basin has been increased to 24 hr with good results. The adsorbed organics undergo oxidation and are synthesized into microbial cells in the stabilization basin. This process can handle shock organic and toxic loads better than can a conventional process, because of the buffering capacity of the sludge reaeration tank, which is isolated from the mainstream of flow.

Generally, the total aeration basin volume (contact plus stabilization basins) is only about 50 percent of that required in the conventional system (5) (6). The total biomass in the system is calculated by adding the MLSS in the contact and stabilization basins. The MLSS concentration in the stabilization basin is three to five times the MLSS concentration in the contact basin.

7.3.5 Completely Mixed System

In a high-rate completely mixed system, as in low-rate completely mixed systems, all portions of the aeration basin are essentially homogeneous, resulting in a uniform oxygen demand throughout the aeration tank. This condition can be accomplished fairly simply in a symmetrical (square or circular) basin with a single mechanical aerator or by diffused aeration. The raw wastewater and return sludge enter at a point (e.g., under a mechanical aerator) where they are quickly dispersed throughout the basin. In rectangular basins with mechanical aerators or diffused air, the incoming waste and return sludges are distributed along one side of the basin and the mixed liquor is withdrawn from the opposite side, as shown in Figure 7-6.

All parts of the basin receive the same organic load, and all organisms are fed uniformly, permitting higher loadings, resulting in a more stable system, and allowing shock and toxic loads to be handled without as detrimental an effect on microorganisms as that occurring in plug flow systems (7) (8). However, the high-rate completely mixed system with F/M_V above 0.75 to 1.0 is slightly less efficient that the three systems described in sections 7.3.2, 7.3.3, and 7.3.4.

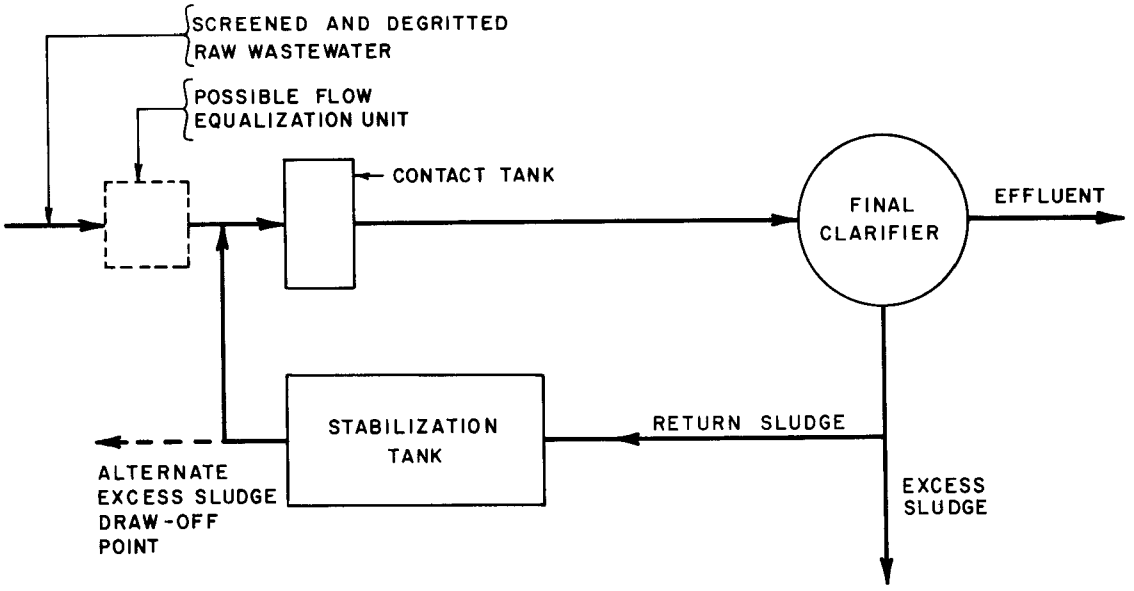

FIGURE 7-5

CONTACT-STABILIZATION ACTIVATED SLUDGE SYSTEM

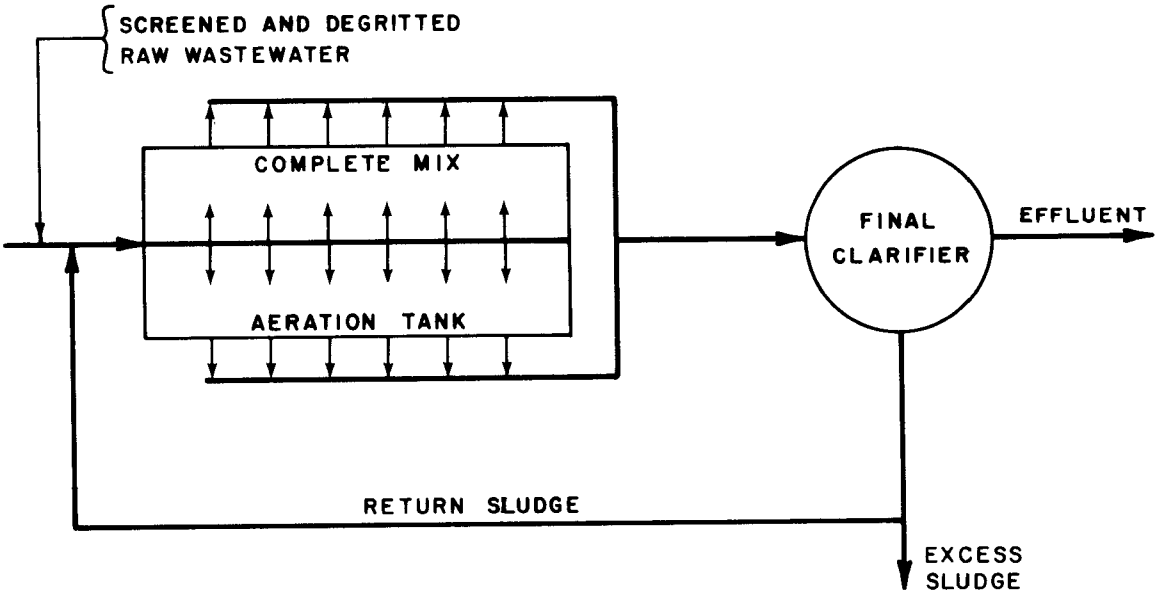

FIGURE 7-6

COMPLETELY MIXED ACTIVATED SLUDGE SYSTEM

7.3.6 Pure Oxygen Systems

Since 1969, pilot and full-scale plants studies have been made, using pure oxygen for activated sludge systems. The system most extensively studied involves covering and compartmentalizing the aeration basins to obtain a high percentage of oxygen utilization. Turbine aerators with compressors for oxygen recycle are used to increase the oxygen dissolution efficiency (9) (10).

The oxygen must be produced onsite with an oxygen generator or liquid oxygen must be purchased and stored in tanks.

Pure oxygen, activated sludge package plants are available and are used for industrial applications; however, they are not yet used to any extent in small municipal plants, because of the costs and the operation requirements for small units.

7.3.7 Selection of Specific Modifications of the Activated Sludge Process

Table 7-1 summarizes criteria and characteristics for extended aeration, oxidation ditch, contact-stabilization, and high-rate complete mix processes. Considerations particularly important in selecting a process are:

1. The amount of excess sludge is less for sludges from extended aeration and oxidation ditches or for sludge from contact-stabilization units with longer detention time in the stabilization basins.
2. If low-cost, suitable land is available nearby, the oxidation ditch may be the most cost-effective system.
3. If equalization of flow and loading for following treatment is desirable, it is possible to design an extended aeration or an oxidation ditch for a 15- to 20-percent variation in operating depth, and achieve the needed equalization of both flow and BOD load within the aeration basin itself.
4. If the peak-to-minimum flow ratio is greater than about 4:1, it will be difficult to achieve efficiency using a contact stabilization system, without some prior equalization of flow.
5. Influents with grease and oil concentrations between 75 and 200 mg/l require grease removal pretreatment for high-rate completely mixed activated sludge or contact stabilization systems but not for extended aeration or oxidation ditch systems.
6. A completely mixed low-rate extended aeration or oxidation ditch system can handle toxic or shock loadings better than can high-rate completely mixed or contact stabilization units.
7. If nitrification to reduce ammonia-nitrogen levels in the effluent to 1 to 3 mg/l is required, the extended aeration or oxidation ditch can be designed to accomplish the required removals.

TABLE 7-1

DESIGN CRITERIA OF MODIFIED ACTIVATED SLUDGE PROCESSES (11) (12)

Item	Extended Aeration	Oxidation Ditch	Contact Stabilization	High-Rate Complete Mix
F/M_v, lb BOD_5/day/lb MLVSS	0.05-0.15	0.03-0.10	0.2-0.6	0.2-0.4
Sludge residence time, days	20-30	20-30	6-12	6-12
MLSS, mg/l (contact unit/reaeration unit)	3,000-6,000	3,000-5,000	1,000-3,000 (4,000-10,000)	2,000-5,000
Volumetric loading, lb BOD/day/1,000 ft^3	10-25	10-20	30-40	40-60
Hydraulic detention, hr (contact unit/reaeration unit)	18-36	12-96	0.3-0.7 (3-6)	2.6
Recycle ratio (R)	0.75-1.5	0.25-0.75	0.25-1.0	0.25-1.0
SCFM air/lb BOD_5 removed	3,000-4,000	–	800-1,200	800-1,200
Lb O_2/lb BOD_5 removed	1.5-1.8	1.5-1.8	0.7-1.0	0.7-1.0
Reduction of NH_3 as N, percent	90	90	20	20
Volatile fraction of MLSS	0.6-0.7	0.6-0.7	0.6-0.8	0.7-0.8

7.4 Applicable Design Guidelines

7.4.1 Food to Micro-organism Ratio (F/M_v)

The most important basic design parameter for activated sludge systems is the organic loading, expressed as food-to-micro-organism ratio (F/M_v). Different loadings are used for various systems; the value of the ratio will change, depending on effluent quality required. This loading also influences the waste sludge produced, mixed liquor settling characteristics, and the oxygen requirements. It is represented by the equation:

$$\frac{F}{M_v} = 0.133(Q/V)(L_i - L_e)/MLVSS$$

where

F/M_v = food to micro-organism ratio, lb BOD/day/lb MLVSS

Q = 24-hr design flow, gpd

V = aerator tank volume, ft^3

L_i = BOD_5 in aerator influent, mg/l

L_e = BOD_5 in aerator effluent, mg/l

MLVSS = volatile suspended solids in aerator mixed liquor, mg/l

Before the aeration basin volume can be determined, the engineer must select the BOD loading, or F/M_v ratio, at which the treatment plant will operate for the design flow. The F/M_v ratio under which the plant operates will control the final effluent quality (by the settling characteristics achieved for the sludge), the degree of organic removal, and the amount of waste sludge produced per pound of BOD_5 removed. If the F/M_v value is above 0.75 to 1.0 lb/BOD_5/day/lb MLVSS, the plant is considered a high-rate system.

The soluble BOD_5 in the effluent is a function of the F/M_v. The F/M_v ratio has a moderate effect on the amount of soluble BOD_5 in the effluent for values of 0.25 to 0.5, with the BOD_5 increasing slightly as the F/M_v increases. The effect is more pronounced at higher F/M_v values and is also affected by the flow regime (plug flow or complete mix) in the aerator. Effluent SS may be higher at very high or very low F/M_v values, because of the poorer flocculating properties of the biomass at very low BOD loadings and at F/M_v values of 1.0 and higher (12). In well-operated plants, effluent SS will be least for F/M_v values in the range of 0.25 to 0.50. The primary reason for designing for a relatively low F/M_v value is to minimize waste sludge production, because the disposal of waste activated sludge is expensive. For example, for settled wastewater at an F/M value of 0.25, the excess VSS is about 0.38 lb/lb of BOD_5 removed; for an F/M value of 0.75, VSS is about 0.60 lb/lb

BOD_5—an increase of 58 percent. Proper evaluation of F/M_v requires balancing higher capital cost and operating costs for disposing of the larger sludge volumes against smaller aeration basins with higher F/M values.

The BOD_5 of the effluent SS varies with the F/M_v value. For F/M_v values below 0.25, the BOD_5 of the SS is about 50 percent, expressed in milligrams per liter; as F/M_v values exceed 0.75, the BOD_5 increases to 75 or 100 percent of the SS, expressed in milligrams per liter (12).

Before the aeration volume can be calculated, the MLSS must be projected on the basis of the MLSS that can normally be carried for any particular activated sludge system and the aeration method. With diffused-air aeration systems, the rate of oxygen input will usually limit the concentration of MLSS that can be carried in the aeration basin. With well-operated diffused-air systems, the usual range of MLSS for normally loaded plants is 2,500 to 4,000 mg/l. The higher values are for treatment of unsettled domestic wastewater (12).

With mechanical aerators (including both surface aerators and submerged turbines dispersing compressed air), MLSS values have been carried satisfactorily in the range of 3,000 to 4,500 mg/l (12). The solids in extended aeration plants have lower oxygen requirements, because of the lower rates of oxygen uptake during endogenous respiration; therefore, higher values of MLSS (up to 6,000 mg/l) can be carried (3). For design of extended aeration tanks and oxidation ditches, an MLSS value of 4,000 mg/l is average for normal municipal wastewater. In high-rate systems, because of the high rate of synthesis and the resulting increase in concentration of volatile solids, the normal MLSS will be in the range of 1,500 to 3,000 mg/l, depending on the aeration method (12). For design of completely mixed tanks and the contact units of contact stabilization systems, an MLSS value of 2,500 mg/l is average for normal municipal wastewater. The MLVSS is about 75 to 80 percent of the MLSS for settled domestic wastewater and 65 to 70 percent for unsettled, but degritted, wastewater (12).

These values can vary when industrial wastes enter the system. If inert, but volatile, solids are present (e.g., paper fibers from a papermill waste), the amount of inert solids that are part of the MLSS must be estimated in determining the MLVSS. A value of MLSS must be selected to provide good settling characteristics as well as a good F/M ratio. (See Section 7.5 for additional information on settling.)

The aeration volume can be calculated from the following:

$$V = [0.133(Q)(L_i - L_e)]/[(MLVSS)(F/M_v)]$$

The aeration basin can be square, rectangular, or circular.

In design of a treatment plant, determination of the F/M_v depends on the waste sludge produced, the MLSS that can be carried with any specific aeration system, the sizing of the final clarifier, and, most important, how much of a safety factor should be incorporated in the plant to account for unusual and unexpected conditions that could adversely affect settling of the aeration solids.

Although BOD loadings for aeration basins have also been expressed as pounds per 1,000 ft^3/day, comparisons of aeration basin or process performance should be based on the BOD_5 loading expressed as F/M_v.

Retention time is computed from the following equation:

$$t = [0.133(L_i - L_e)]/[(F/M_v)(MLVSS)]$$

where

t = retention time, day.

7.4.2 Sludge Production

The amount of excess solids produced by an activated sludge system is equivalent to the amount of nondegradable solids entering plus the net volatile solids synthesized in the treatment process. The net volatile solids are equal to the synthesized solids minus those oxidized by endogenous respiration. For domestic wastewater, the nondegradable volatile solids plus the net synthesized solids can be calculated from the following equation developed from basic biokinetics (13):

$$M_w = a(F) - bM_v$$

where

M_w = excess VSS produced, lb/day

F = BOD_5 removed = $8.34\ Q(L_i - L_e)/10^6$, lb/day

M_v = total aerator MLVSS, lb

a,b = constants

The constants a and b can be obtained empirically or from analyses of similar plants. For settled domestic wastewater, a = 0.70 and b = 0.075; for unsettled wastewater, a = 0.80 to 1.10 and b = 0.08 (13).

The above relation can be transformed to calculate the excess volatile solids produced per day (M_W), in terms of pounds per pound of BOD_5 removed, by the equation:

$$M_W/F = a - b/(F/M_V)$$

This relation is illustrated on Figure 7-7 for both settled and nonsettled wastewater.

The total excess SS produced (in pounds per day) can be calculated by dividing the value of M_W by the ratio of MLVSS to MLSS. Thus, if this ratio is 0.75, the total excess SS produced is:

$$M_S = M_W/0.75$$

To calculate the net amount of excess SS produced by the system, the amount of SS passing over the weir from the final clarifier with the effluent should be subtracted from the quantity of SS in the clarifier underflow. For low values of F/M, these effluent solids can be a relatively substantial amount. Thus, for settled domestic wastewater, if the final effluent SS concentration is 25 mg/l, for an F/M value of about 0.25, the solids carried out with the effluent will be equal to about 35 percent of the total solids to be wasted.

7.4.3 Sludge Retention Time

Sludge retention time is a useful parameter, because it indicates the time the solids remain in the system. Because the amount of solids in the final clarifier of an activated sludge system depends on the depth of sludge blanket kept, the solids in the clarifier are not used in calculating the retention time of the solids in the system. The sludge retention time is numerically equal to:

$$SRT = M/M_S$$

where

M = total aerator MLSS, lb

M_S = excess SS produced, lb/day

Sludge retention time can also be calculated from:

$$SRT = M_V/M_W = 1/[a(F/M_V) - b]$$

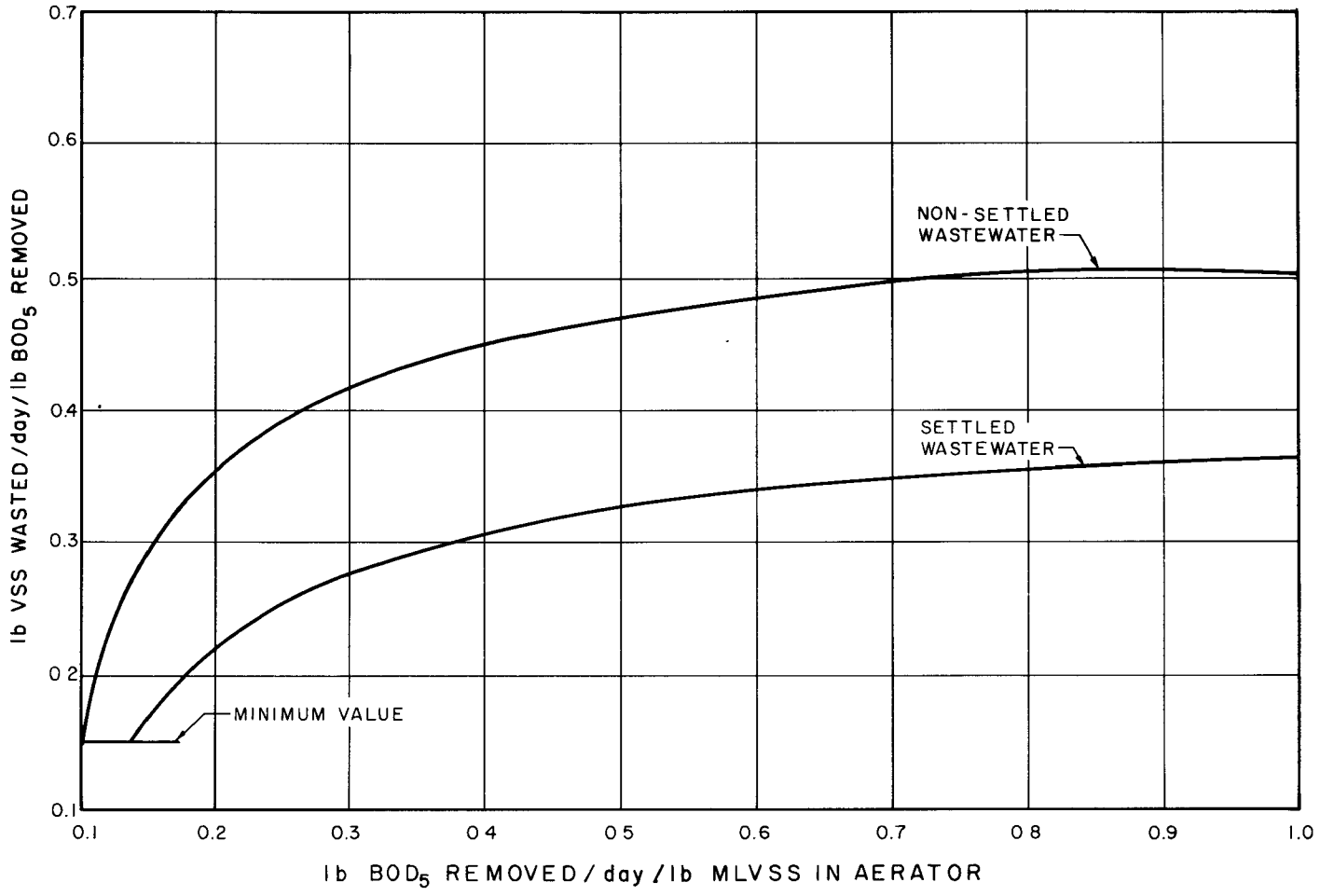

FIGURE 7-7

SLUDGE PRODUCTION IN ACTIVATED SLUDGE SYSTEMS TREATING DOMESTIC WASTEWATER

"Sludge age" is the term frequently used to indicate sludge retention time; however, a somewhat different definition than is given above for sludge retention time has sometimes been implied. In older literature and textbooks, sludge age is often based on the MLSS in the aeration basin and the SS entering the basin with the wastewater.

7.4.4 Sludge Recirculation

The recirculation rate required to maintain the desired concentration of MLSS in the aeration basin can be calculated on the basis of mass balances:

$$Q_R = QS_s/(C_s - S_s) = RQ$$

where

Q_R = recycle flow, gpd

Q = influent flow, gpd

S_s = MLSS entering final clarifier, mg/l

C_s = concentration of settled solids (sludge) in final clarifier, mg/l

R = recycle ratio = $S_s/(C_s - S_s)$

It is advantageous to concentrate the mixed liquor solids from the aeration basin as much as is practical, to reduce the recycle pumping. Recycle pumping capacity should be at least equal to 100 percent of Q, if the MLSS do not settle well and the C_s is no more than about twice the value of S_s.

Frequently, plant operators use the sludge volume index (SVI) determined by the procedure given in *Standard Methods* (14) as a basis for adjusting the recirculation rate (R). The SVI is the ratio of the percentage solids settled by volume after 30 minutes of settling to the percentage suspended solids by weight in the unsettled aerated liquor. The value of R selected will depend on the settleability of the sludge. A poorly settling sludge—one that has a relatively high index—will require a higher recycle rate, to maintain the necessary MLSS. For concentrations of MLSS in the range of 1,500 to 5,000 mg/l, an SVI below 100 indicates a well-settling sludge. As is discussed in section 7.5, the settling rate is considerably affected by the actual value of MLSS; for example, it decreases for higher concentrations.

Sludges with SVI's above about 200, generally called "bulking" sludges, are one of the principal causes of poor plant performance. However, because the SVI is not a basic parameter, its value is not necessarily indicative of a bulking sludge. Thus, if the MLSS is 1,000 mg/l and the sludge settles to 25 percent of its original volume in 30 minutes, the SVI equals 250. In this example, the sludge is not bulking. Bulking sludges may cause a high loss of solids with the effluent from the clarifier. Causes of bulking and possible remedies are discussed in section 7.6.5.

7.5 Oxygen Requirements

The oxygen required for carbonaceous oxidation in the activated sludge process can be calculated from a relation derived from basic biokinetics, with empirical coefficients that depend on the type of wastewater. The relation is:

$$O_{RC} = [a' (F/M_v) + b'] M_v$$

where

O_{RC} = carbonaceous oxygen required, lb/day

F/M_v = lb BOD_5/day/lb MLVSS in aerator

a' = constant (about 0.55 for domestic wastewater)

b' = constant (about 0.15 for domestic wastewater)

M_v = MLVSS in aerator, lb.

The value of F/M_v affects the oxygen requirement, in that the amount needed for endogenous respiration becomes relatively high if the BOD_5 load is low, and vice versa, as shown below:

Activated Sludge System	F/M_v day^{-1}	O_{RC}/F
High Rate	1.0	0.70
Low Rate	0.1	1.65

Note that the oxygen required is dependent on the amounts of influent BOD and MLVSS in the aeration basin. Values of a' and b' from a number of sources are shown in Table 7-2. If industrial wastes are added to the municipal wastes and the wastewater influent is quite septic, or a large proportion of residences have garbage grinders, the values in Table 7-2 for a' and b' do not apply. Depending on the completeness of the oxidation (the amount of synthesis and endogenous respiration), the BOD_5 may not truly represent the organic loading.

If nitrification occurs, oxygen must be supplied in addition to the oxygen required for removal of the carbonaceous BOD. The oxidation of ammonia-nitrogen to nitrate requires about 4.6 lb of oxygen per pound of ammonia-nitrogen oxidized, which must be added to that calculated for removing BOD_5. The additional oxygen required for nitrification can be found using the following equation:

$$O_{RN} = (38.4)(Q)(\Delta NH_3)/10^6$$

where

O_{RN} = nitrogenous oxygen required, lb/day

Q = plant inflow, gpd

ΔNH_3 = [(influent $NH_3 \cdot N$) - (effluent $NH_3 \cdot N$)], mg/l

TABLE 7-2

COMMONLY USED VALUES FOR SYNTHESIS CONSTANT a′ AND AUTO-OXIDATION CONSTANT b′

Method of O_2 Supply	a′	b′	Reference
Oxygen	0.635	0.138	EPA, Various Plants (15)
Air	0.5	0.055	Heukelekian, Orford & Mangelli (16)
	0.706	0.049	Bergman and Borgering (17)
	0.48	0.08	Eckenfelder & O'Connor (18)
	0.52	0.09	Logan & Budd (19)
	0.53	0.15	Quirk (20)
	0.5	0.1	Emde (MLSS = 3,500-10,000 mg/l) (15)
	0.77	0.075	Smith (Hyperion Plant) (15)

7.6 Clarification

7.6.1 General Information

The two purposes served by a final clarifier are removal of SS from the effluent and thickening sludge to be returned to the aeration basin. In an activated sludge system, the final clarifier must be considered an integral part of the process and designed accordingly. Its area depends on the settling rate of the MLSS coming from the aeration basin; its depth depends on the thickening characteristics of the sludge in the clarifier. Because activated sludge solids form a relatively concentrated suspension, their settling takes place (see Figure 6-3) under conditions of hindered settling. The initial settling velocity (ISV) remains constant until the particles in suspension become so concentrated that they "rest" on each other; the process is then termed thickening.

The ISV is the parameter that must be used in determining the permissible hydraulic loading on the clarifier. The ISV cannot be accurately determined in a standard 1,000-ml cylinder. For operations in smaller plants, the 2-liter Mallory type cylinder, 5 in. (127 mm) in diameter and 6 in. (152 mm) deep, has produced relatively good results. For design purposes, however, procedures similar to those developed by Dick and Ewing (21), which include gentle stirring, are preferred. These procedures use columns with heights more nearly that of the sludge depth in the clarifier (i.e., 3 to 6 ft [0.9 to 1.8 m]), diameter of about 3.5 to 4 in. (89 mm), and tip speeds on the stirrer of about 10 in./min (254 mm/min).

Primary clarifiers are discussed in chapter 6. For additional information and details on final clarifiers, see chapters 9, 12, and 13 and the U.S. EPA *Process Design Manual for Upgrading Existing Wastewater Treatment Plants* (2).

The initial settling rate of a suspension of solids will depend on the density and size of the individual particles, the concentration of the solids, and the water temperature. The density of the individual particles in the MLSS will depend on the type of organisms, which will vary with the type of organic matter in a wastewater and the SRT. Also, the amount and type of inert material entrained in the floc will have a significant influence. For example, an activated sludge developed from unsettled domestic wastewater will have heavier particles than that developed from settled wastewater. The relative amount of soluble organic matter in a wastewater does not necessarily determine the density of the floc particles. Certain types of soluble organics present in industrial wastewaters can produce very dense biological growths. Activated sludge floc is an agglomeration of heterogeneous micro-organisms held together by the bioflocculation caused by extracellular polymeric products produced by certain organisms. In the floc, the insoluble and inert material that was present in the wastewater is enmeshed. In general, the floc particle is an amorphous mass without consistent or physically identifiable properties.

Proper bioflocculation in the activated sludge basin is extremely important for the adequate performance and functioning of the treatment process. This type of flocculation is quite strong; even after severe handling of the activated sludge mixed liquor by pumps in the sludge recycle step, the flocs reform. Agitation in the aeration basin usually results in an energy gradient (G) of about 100, higher than normally used for flocculation. With very low and very high F/M values, activated sludge does not flocculate well. Activated sludge solids may become somewhat dispersed, because the flocculation is weak; this dispersal prevents proper clarification. Insertion of a mechanical flocculation step between the aeration basin and the final clarifier, to assist in agglomerating poorly adhering floc, is beneficial. The retention time in such a basin need not be over 10 minutes; the value of G should be below 50.

Figure 7-8 contains a conservative approximation for settling data, obtained from some 10 sources reported in the literature. The references, listed at the end of this chapter, are keyed to the numbers and symbols shown. These data are for good quality, nonbulking sludges, corrected to a liquid temperature of 20° C (68° F) with SVI values below 100.

The BOD_5 load (F) in pounds per day and the value of MLSS determine the aeration or reactor basin size. Also, the value of MLSS determines the clarifier size, because the settling velocity of the solids decreases as the concentration increases. The initial settling velocity for three values of MLSS with corresponding theoretical peak overflow rates are given below. Because conditions for settling in secondary clarifiers are not ideal, the theoretical peak overflow rate should be reduced by 15 to 30 percent for actual design.

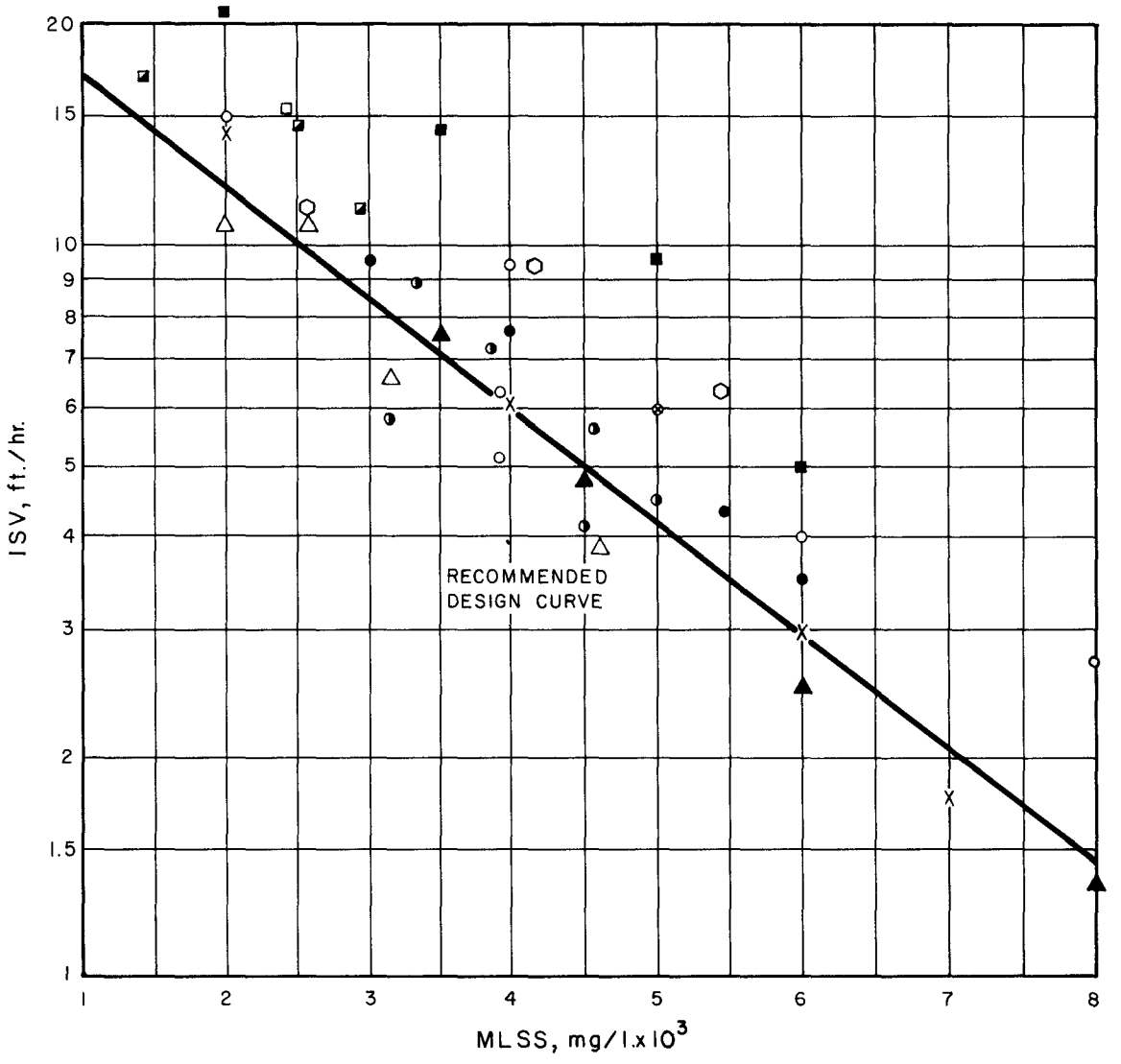

FIGURE 7-8

ACTIVATED SLUDGE SETTLING DATA FOR DOMESTIC WASTEWATER (20° C)

MLSS	ISV	Theoretical Peak Overflow Rate
mg/l	ft/hr	gpd/ft^2
2,500	10.0	1,800
3,500	7.0	1,260
5,000	4.2	760

Because the final clarifier is a critical unit in the activated sludge process, good engineering practice demands adequate sizing. For small community treatment plants, final clarifiers design should be based on peak flows. Partial equalization of flow, to reduce peak flow rates, may be warranted. Because clarification is sensitive to sudden changes in flow rates, only variable speed pumps should precede the clarifier in the plant. Typical overflow rate and solids loading criteria are given in Table 7-3.

TABLE 7-3

FINAL CLARIFIER DESIGN CRITERIA (2)

Type of Treatment	Peak Overflow Rate[1]	Peak Solids Loading[2]
	gal/ft^2/day	lb SS/day/ft^2
Extended Aeration or Oxidation Ditch	800	20-30
Completely Mixed or Contact Stabilization	1,000-1,200	40-50

[1]The peak overflow rate does not include sludge recycle flow, which leaves through the bottom of the clarifier. Sludge settling characteristics at the lowest temperatures to be expected should be considered.

[2]Loadings are based on peak plant inflow plus the sludge recycle flow. The possible necessity of reducing loading to meet subnormal settling characteristics should be considered.

The depth of clarifiers must be sufficient to permit the development of a sludge blanket, especially if it is possible that sludge may bulk. The side water depth should be no less than 10 ft (3 m) for an MLSS of 2,000 mg/l; this minimum should be increased about 1 ft (0.3 m) per each MLSS increase of 1,000 mg/l, to 14 ft (4.2 m) for an MLSS of 6,000 mg/l (28). The depth of interface between clarified wastewater and the top of the sludge blanket should be designed to be no less than about 4 to 5 ft (1.2 to 1.5 m) below the effluent weirs; the sludge blanket should be no thicker than 3 to 4 ft (0.9 to 1.2 m) during normal operation.

The final clarifier in an activated sludge system cannot be used effectively to obtain sludge as thick as is desired for the sludge to be wasted. The solids in the clarifier are part of the process and must be kept in proper condition for use in the aeration basin, to treat the incoming wastewater. Because of the oxygen uptake rate of the activated solids (from 25 to 100 mg/l/hr), any dissolved oxygen in the liquid from the aeration basin will usually disappear rapidly in the clarifier (generally, in 5 to 10 minutes). Therefore, when the solids subside in the clarifier, they are out of contact with any dissolved oxygen for a prolonged period—as long as 1 to 3 hr. This environment is not a desirable one for aerobic organisms; therefore, an effort should be made to recycle them as quickly as possible to the aeration basin.

Furthermore, if such solids remain under zero oxygen conditions for over 30 minutes, depending on the liquid temperature, anaerobic conditions will develop with resultant release of methane, carbon dioxide and other gases, and flotation of the solids. If nitrates have been formed because of nitrification in the aeration basin, the facultative organisms will break down the nitrates and release nitrogen gas, with resultant buoying of the solids. A high degree of thickening should not be attempted, to move the solids rapidly through the clarifier. The solids that settle to the basin bottom should not be allowed to remain there for more than 30 minutes.

To insure proper handling of the activated solids in the clarifier, a rapid sludge removal system is recommended for use with the scraper mechanism, by placing several suction drawoff pipes along the scraper arms, so that the settled solids can be drawn off over the entire basin area without being moved to a central sump. Equipment of this type is available as standard design mechanisms. Desirable operational features in suction-type mechanisms include independent flow controls for each drawoff and visible outflows. An alternative to suction drawoff pipes is placement of a radial channel from the sludge well, into which the sludge is scraped on each rotation and then removed to the sludge well by a screw conveyor in the bottom of the channel. Waste sludge is usually drawn from the central sump, to which any heavy grit or sand that may have entered the basin is moved by the scrapers (or screw conveyors).

The velocity of any part of the collecting device through the water, particularly near the sludge blanket, must be restricted sufficiently, to prevent interference with solids agglomeration and settling. The excess activated sludge to be wasted will not normally be thickened in the final clarifier to the degree required for further processing. Sludge will leave the clarifier with about 0.5- to 2.0-percent dry solids, depending on the concentration of the aeration basin solids and whether the wastewater treated in the activated sludge process has received primary settling. The volume will be about 1 to 2 percent of raw wastewater flow. Waste activated sludge may be further thickened to about 4- to 5-percent solids (see chapter 14), if desired.

An activated sludge can have poor settling characteristics, because of 1) poor bioflocculation, 2) excessive bound water, 3) small gas bubble entrainment in the floc, 4) growth of types of bacteria or fungi (filamentous organisms) that have a large surface area compared to their mass, or 5) excessive amounts of hexane soluble oils and greases.

7.6.2 Poor Bioflocculation

Too low or too high an F/M_V ratio, toxicants in the wastewater, a lack of essential nutrients, or some unknown reason may cause carryover of solids in the effluent. The flocculation of the solids from the aeration basin can sometimes be aided by a slow-speed mechanical flocculator ahead of, or integral with, the clarifier. If industrial wastes are present in varying amounts in domestic wastewater, such mechanical flocculation equipment has sometimes been used, to counteract any effects of poor bioflocculation. The addition of a coagulant, such as alum, may be very helpful.

7.6.3 Bound Water

Bound water occurs if the bacterial cells composing the floc swell, because of addition of water, until their density approaches that of the water (2) (31).

7.6.4 Gas Bubble Entrainment

Poor settling is frequently said to be caused by "overaeration." Usually, this term indicates conditions of high dissolved oxygen in the aeration basin. Bacteriologists have shown that values of DO above 2 mg/l have no effect on the bacterial metabolism. For values of liquid DO above about 2 mg/l, the limit to bacterial growth is the transfer of food to the cell surfaces or the inherent maximum growth rate of the organism. Therefore, high DO is neither deleterious nor beneficial. However, other conditions associated with obtaining a high DO may cause poor settling. The excessive agitation accompanying high aeration may degrade bioflocculation; it may also cause fine bubbles of air (most likely nitrogen, with which the liquid is saturated) to adhere to the floc, keeping it from separating out, thus retarding the settling rate or even causing flotation.

7.6.5 Bulking

Sludge bulking is generally used to describe MLSS that settle very poorly in the final clarifier. However, it should only be used to describe aeration basin solids that are light and voluminous and that, under a microscope, show a heavy growth of filamentous organisms (either bacteria or fungi). The term should not be used to describe solids that do not settle well because of poor bioflocculation. Although filamentous organisms are always present in the heterogeneous population of organisms in the activated sludge, they are not a dominant species unless the environment is particularly favorable to their growth or unfavorable to normal spherical organisms.

For small plants, the SVI is a good guide for the operator's use in determining the rate of sludge return required, and when sludge must be wasted to lower the MLSS. After identifying a bulking condition with the SVI test, a microscopic examination of the mixed liquor can be made, to identify the organisms (if they are the cause of the bulking). Bulking will often be caused by filamentous organisms. Filamentous bacteria found include *Sphaerotilus natans, Bacillus cereus* var. *mycoides, Thiothrix supp.*, and *Beggiatoa supp.* (32) Occasionally,

TABLE 7-4

METHOD FOR SOLVING A BULKING PROBLEM (32)

1. Identify bulking as distinct from inadequate design, poor operation, deflocculated sludge, foam-forming sludge, rising sludge, septic sludge, etc.

   ↓

   Characteristics of bulking: Sludge settles and leaves a clear supernatant but SVI is high (>150 ml/gm); low solids concentration in return sludge; and high sludge blanket in final settling tank.

   ↓

2. Identify if filamentous or nonfilamentous bulking by microscopic examination of mixed liquor and return sludge. → Nonfilamentous bulking → Chlorinate return sludge at 5 to 10 mg/l.

   ↓

   Filamentous bulking.

   ↓

3. Determine if filamentous organisms are bacteria or fungi. → Fungal bulking → Look for industrial waste problem.

   ↓

   Bacterial filamentous bulking; identify organism, if possible.

   ↓

4. Look for source of massive inoculum of filamentous bacteria in wastewater or process return flows. → Massive inoculum of filamentous bacteria → Use bactericide to eliminate inoculum.

   ↓

   Filamentous bacteria growing in activated sludge.

   ↓

5. Establish theory of treatment: → Unsuccessful
   a. Kill sludge and start over.
   b. Use bactericide on return sludge.
   c. Use flocculant or weighing agent to decrease SVI.

   ↓

6. Establish objectives, minimum time, and control procedures for course of treatment.

   ↓

7. Carry out course of treatment and collect data for evaluation of treatment.

   ↓

8. Evaluate treatment results. → Successful → Continue as needed.

   ↓

   Unsuccessful → (return to 5)

filamentous fungi species such as *Geotrichum, Candida,* and *Trichoderma,* have been isolated from bulking sludge (32). Other factors that may cause poor settling include poor clarifier design; poor operaton and microbial problems, such as deflocculation; septic sludge; rising sludge; floating sludge; pinpoint floc; and foam-forming sludge. An organized trial-and-error approach to solving bulking problems is presented in reference (32) and shown in Table 7-4. The rate of sludge return should be specifically determined by the concentration of VSS in the recycled sludge—not by the SVI. The rates of sludge return required to maintain an MLSS at 2,000 mg/l for various SVI values are shown in Table 7-5 (32). However, for the operation of a specific plant, if one or more specific values of MLSS are desired, the engineer should develop a table similar to Table 7-5 during plant startup for operator use, because the SVI must be correlated with the correct MLSS.

TABLE 7-5

RETURN SLUDGE RATE REQUIRED TO MAINTAIN MLSS AT 2,000 mg/l FOR VARIOUS SVI VALUES (32)

SVI[1]	Return Sludge Solids	Required Return Sludge Rate
	mg/l	% of Influent Rate
50	20,000	11.1
100	10,000	25.0
200	5,000	66.7
250	4,000	100
400	2,500	400
500	2,000	Infinite

[1]SVI = (ml settled sludge × 1,000)/(mg/l SS).

Detailed information on determining the cause of bulking and the use of chemicals to control it is given in reference (32).

Although high carbohydrate wastes are frequently thought to cause filamentous growths, this cause-effect relation is not quite valid, because many activated sludge plants treat industrial wastes having sugars, alcohols, and other carbohydrates. The important criterion is the carbon (or BOD) to nitrogen (or phosphorus) ratio, because a high ratio is detrimental to the growth of organisms that are not filamentous.

Wastewater that has relatively high sulfides will cause the growth of a special filamentous type of sulfur bacteria. If this process occurs, only chlorination of the recycled sludge will be effective.

Fungus organisms are generally filamentous; a pH below about 6 favors their growth. This condition can occur if high BOD loadings produce large amounts of carbon dioxide, which may not be effectively removed by aeration.

Because of the relatively large surface-to-volume ratio of filamentous types, compared to more compact organisms, filamentous types have an advantage if the DO level is very low (below 0.5 mg/l) or the concentration of essential nutrients is low. These organisms are, however, aerobic and are destroyed by completely anaerobic conditions. In fact, some plant operators have found that the growth of these organisms can be controlled, if the sludge is subjected to several hours of anaerbic conditions; for example, a long detention time in a final clarifier. They can also be controlled by continuously adding a toxicant, such as chlorine or hydrogen peroxide, to the recycled sludge for about 24 hr. The chlorine dosage should be between 10 and 20 mg/l, or about 0.2 to 1.0 lb of chlorine per 100 lb of return sludge SS (2). Because doses of chlorine above 20 mg/l may cause deflocculation, the dosage should be determined in the laboratory. Although chlorine is apparently effective against *Sphaerotilus, Thiothrix,* and *Beggiatoa,* it is not effective against *Bacillus cereus.* The hydrogen peroxide dosage should be about 200 mg/l, based on plant influent flow (2). The large surface-to-volume ratio of these organisms makes them more susceptible to such toxicants than more compact organisms.

Raising the pH to over 8.0 with lime to control bulking has a multiple effect, causing weighting of the floc, acting somewhat as a bactericide, and causing some additional flocculation.

7.6.6 Hexane Solubles

Communities with a large number of restaurants and filling stations—such as those in resort or tourist areas—may have abnormally high concentrations of greases and oils in their wastewaters. To prevent interference with sludge settling (by lowering the density), grease and oil in the conventional activated sludge aerator tank influent should be less than 75 mg/l and preferably less than 50 mg/l. The hexane solubles loading should be less than about 0.15 lb/day/lb MLSS (33).

7.7 Aeration System Design

7.7.1 General Design Considerations

After the oxygen requirements have been calculated for an activated sludge system (or any other process requiring aeration), the type and capacity of the aeration system can be determined and the cost evaluations made. The three general types of aeration systems in use for the activated sludge process and other unit processes requiring oxygen input are:

1. Diffused air.
   a. fine bubble
   b. coarse bubble
2. Submerged turbine with compressed air spargers.
3. Surface-type mechanical entrainment aerators.

The first two systems require air compressed to a pressure sufficient to overcome the hydrostatic head above the air inlets or diffusers in the aeration basin, plus the head losses in 1) the diffusers or spargers and 2) the piping. fittings, and the piping, fittings, and valves between the compressor and the aeration basin. The agitator-sparger system has an operational advantage over the diffused air unit, because, although air may be reduced during low flows, the necessary mixing may be continued by the action of the turbine. The third type of aeration system uses agitators located near the liquid surface which entrain air and pump large quantities of liquid through the aeration zone surrounding the surface agitator. To obtain detailed information on the use and installation of various aeration systems, see WPCF *Manual of Practice* 5 (34).

To select the proper capacity for any aeration system for the actual conditions at a treatment plant, it is necessary to consider the rating of the aeration system. To compare all the various aeration systems from an energy requirement standpoint, the method of rating such systems on the basis of oxygen input per unit time per unit of applied power (lb/hr/kW) should be used.

The principal parameters that control the rate of oxygen dissolution into wastewater for any aeration system are 1) liquid temperature; 2) partial pressure of the oxygen characteristics of wastewater, compared to clean water; and 3) dissolved oxygen to be maintained in the liquid under design conditions. The first two parameters are taken into account by the saturation level for oxygen for conditions at the treatment plant and by temperature correction. The effect of the wastewater characteristics must be estimated from published information or measured in the laboratory.

Aeration systems are rated for standard conditions defined as 1) clean water at a temperature of 20° C (68° F), 2) mean sea level atmospheric pressure (10.13 kPa), and 3) zero dissolved oxygen in the aerated liquid. Knowing the efficiency or oxygen input rate for standard conditions permits calculation for actual conditions, using the following:

$$\frac{E}{E_o} \text{ or } \frac{N}{N_o} = \left(\frac{\beta C_{sw} - C_L}{C_s}\right)(\alpha)(1.024)^{T-20}$$

where

E = actual oxygen absorption efficiency

E_o = oxygen absorption efficiency under standard conditions

N = rate of oxygen input into wastewater under actual conditions lb/hr/kW

N_o = rate of oxygen input under standard conditions, lb/hr/kW

C_s = oxygen saturation concentration for clean water under standard conditions, mg/l (9.20 mg/l for clean water)

C_{sw} = oxygen saturation concentration for clean water under actual conditions, mg/l (C_{sw} values are given on Figure 7-9)

C_L = desired oxygen concentration, mg/l

β = the ratio of saturation values of wastewater to clean water at wastewater temperature and actual atmospheric pressure (approximately 0.95 for domestic wastewater

α = relative air-water interface diffusion rate, about 0.90 for mechanical aerators and about 0.40 for porous diffusers, for normal domestic wastewater as compared to clean water; varies primarily with the effects of changing concentrations of surface active agents

T = temperature, ° C

The ability to diffuse oxygen into wastewater from air bubbles or air-water interfaces, as compared to clean water, depends on the various soluble and suspended substances in the wastewater and the method of aeration. Soluble surface active agents, such as detergents, can have a significant effect.

The relative ability to diffuse oxygen through air-water interfaces is measured by the factor α. Although for most wastewaters this is less than unity, for some wastewaters and aeration methods it can be greater than unity. For raw domestic wastewater, this factor varies from 0.35 to 1.50, depending on the aeration method (36) (37). The value to use in activated sludge aeration basins equipped with mechanical aerators is 0.90. For diffused air systems, the value is much less and must be determined for the specific systems. (It is usually about 0.40 for porous diffusers.) The number 1.024, raised to the power (T − 20), measures the relative effect of liquid temperature on the molecular diffusion of oxygen into water. C_L is the dissolved oxygen concentration required under steady-state conditions. In activated sludge aeration basins, it is usually 2 mg/l.

In the above relation for relative oxygen input, the liquid temperature affects the oxygen input rate or efficiency in two ways that almost cancel each other. Thus, the values of E/E_0 or N/N_0 for liquid temperatures of 10° C (50° F) and 30° C (86° F) are only different by about 5 percent—the lower value being at the higher temperature. That is, the liquid temperature itself does not have a great influence on the oxygen input rate or absorption efficiency.

7.7.2 Diffused Air Systems

Diffusers commonly used in activated sludge systems include 1) porous plates laid in the basin bottom, 2) porous ceramic domes or tubes connected to a pipe header and lateral system, 3) tubes covered with synthetic fabric or wound filaments, and 4) specially designed spargers with multiple openings. Because clogging of porous diffusers by precipatation of

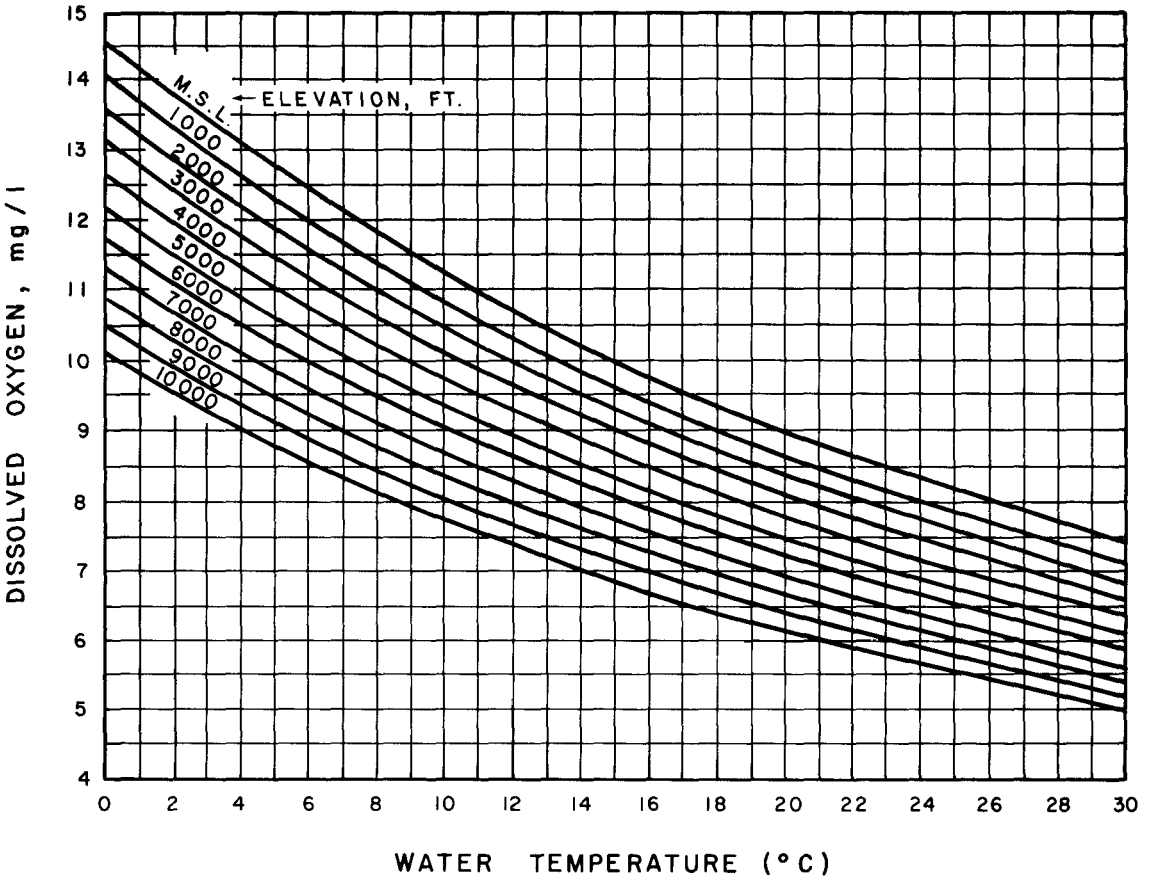

FIGURE 7-9

SATURATION CONCENTRATION FOR ATMOSPHERIC OXYGEN (35)

solids on the exterior, by organic growths, and by dirt carried in with the compressed air has been a problem, regular cleaning is necessary—although the time interval depends on the composition of the wastewater and the size of the openings in the diffusers.

The mixing equipment for aeration or oxygen dissolution must be sized to keep the solids in uniform suspension at all times. Depending on basin shape and depth, 4,000 mg/l of MLSS require about 0.75 to 1.0 hp/1,000 ft^3 (0.02 to 0.03 kW/m^3) of basin volume to prevent settling, if mechanical aerators are employed; 30 cfm of air per 1,000 ft^3 (1.8 std $m^3/h \cdot m^3$) are needed, if a diffused air system is used. Usually, the power required to supply the oxygen will equal or exceed these values, particularly if oxygen is to be supplied for nitrification. Values of MLSS higher than 4,000 mg/l would require higher power inputs for mixing. Power values will also vary with the type of solids produced from different wastewaters.

Oxygen absorption efficiency varies from 4 to 12 percent, under standard conditions (E_o) for diffusers and spargers in domestic wastewater activated sludge aeration basins. The variation depends on opening (bubble) size and the general design and arrangement in the basin (38). The higher efficiency is obtained with diffusers producing finer bubbles. If the value of E_o is 8 percent, the actual efficiency, E, for sea level conditions, if maintaining 2 mg/l of dissolved oxygen in the aeration basin and treating domestic wastewater, will be about 5 percent.

$$Q_a = \frac{0.04\, O_R}{E}$$

where

Q_a = air required, scfm

O_R = oxygen required, lb/day

E = oxygen absorption efficiency (as a ratio) under actual conditions

The power required to compress the air at standard conditions will depend on the submergence of the diffusers or spargers and the pressure losses in the air piping. It can be calculated from:

$$P = \frac{0.168\, Q_a}{e} \left[\left(\frac{p + 14.7}{14.7} \right)^{0.283} - 1 \right]$$

where

P = power required to compress air, kW

Q_a = air required, scfm

e = compressor efficiency, usually 0.60 to 0.85

p = compressor outlet pressure, lb/sq in.

The following relation can be used to calculate the pounds of oxygen that can be dissolved per hour per horsepower input to a compressor:

$$N = 6.23\,(E)(e)\left[\left(\frac{p + 14.7}{14.7}\right)^{0.283} - 1\right]$$

where

N = oxygen that can be dissolved, lb/hr/kW

E = oxygen absorption efficiency (as a ratio) under actual conditions

e = compressor efficiency (as a ratio)

p = compressor outlet pressure, lb/sq in.

For example, using E = 0.05, e = 0.70, and the compressor outlet pressure as 7.5 psi, the value of N would be 1.74 lb/hr/kW (0.79 kg/kW·h).

The oxygen absorption efficiency of diffusers of all types is significantly affected by surface-active agents (such as detergents) in wastewater. Long bubble retention times in the liquid allow the surface-active agent to accumulate in the bubble-water interface and present a barrier to rapid transfer of oxygen from the bubble to the liquid. It has been shown that a typical domestic wastewater detergent concentration can cause a reduction in oxygen absorption efficiency of 40 to 60 percent of that obtained in clean water for porous diffusers (31) (39) (40). Oxygen transfer efficiencies of various aeration systems are shown in Table 7-6. Because manufacturers rate the oxygen absorption efficiency of their equipment using clean water, it is important to account for the possible effects on oxygen absorption of surface-active agents in design calculations.

Oxygen transfer efficiency in wastewater, using mechanical aerators, is higher than in clean water. The turbulence and rapid restructuring of interface surfaces apparently prevent any accumulation of surface-active agents in the air-liquid interfaces.

The oxygen absorption efficiency or oxygen input rate per unit power for any aeration system or device must be corrected for the actual conditions that will occur at the treatment plant. Any test data used for aerator evaluation must be carefully checked, to insure that the tests actually simulated installation conditions and were not made under completely different hydraulic and geometric conditions.

7.7.3 Submerged Turbine Aeration Systems

Since 1950, the submerged turbine (used widely in the chemical process industry) has come into use for activated sludge aeration (41). It has been used primarily in industrial waste activated sludge treatment plants and is considered the desired aeration system for very deep basins, for activated sludges having high oxygen uptake rates, and for high concentrations of MLSS, as in aerobic digesters.

TABLE 7-6

OXYGEN TRANSFER CAPABILITIES OF VARIOUS AERATION SYSTEMS (2)

Type of Aeration System	Standard Transfer Rate[1]	Effective Transfer Rate[2]
	lb O_2/hp-hr	lb O_2/hp-hr
Diffused Air, Fine Bubble	2.5	1.4
Diffused Air, Coarse Bubble	1.5	0.9
Mechanical Surface Aeration, Vertical Shaft	3.2	1.8
Agitator Sparger System	2.1	1.2

[1]Transfer rate at standard conditions, i.e., tap water, 20° C, 760-mm barometric pressure, and initial DO = 0 mg/l.

[2]Transfer rate at following specific field conditions:

$\alpha = 0.85$
$\beta = 0.9$
T = 15° C (8.2° F)
Altitude = 500 ft (152 m)
Operating DO = 2 mg/l for air aeration, 6 mg/l for oxygenation

The system consists of a radial-flow turbine located below the mid-depth of the basin. Compressed air is supplied to the turbine through a sparger (see Figure 7-10). The total power required for this system is equal to the sum of the air compressor power and that needed to drive the turbine. The oxygen absorption efficiency depends on the relative air loading of the turbine and its peripheral velocity.

Studies have shown that, for optimum power consumption, the power should be about equally divided between that for the air compressor and that for the turbine **(41)**. Under standard conditions, the oxygen absorption efficiency for minimum power will be in the range of 15 to 25 percent—20 percent is a reasonable value. Thus, for most conditions, the required air volume will be less than one-half that for an air diffusion system. The compressor pressure will be less, because the turbine is usually located several feet above the basin bottom and the air sparger has insignificant head loss. A convenient and relatively economical method for upgrading overloaded activated sludge plants is afforded, because by installing turbines in the existing aeration basins the oxygen input can be doubled **(42)**.

The peripheral speed of the turbines, for least total power consumption, is 10 to 15 ft/sec (3 to 4.5 m/s). For standard conditions, the oxygen input averages 3.4 to 4.0 lb/hp·hr (2.0 to 2.4 kg/kWh). Generally, the power usage for a given oxygen input will be 30 to 40 percent less than for air diffusion systems **(43)**.

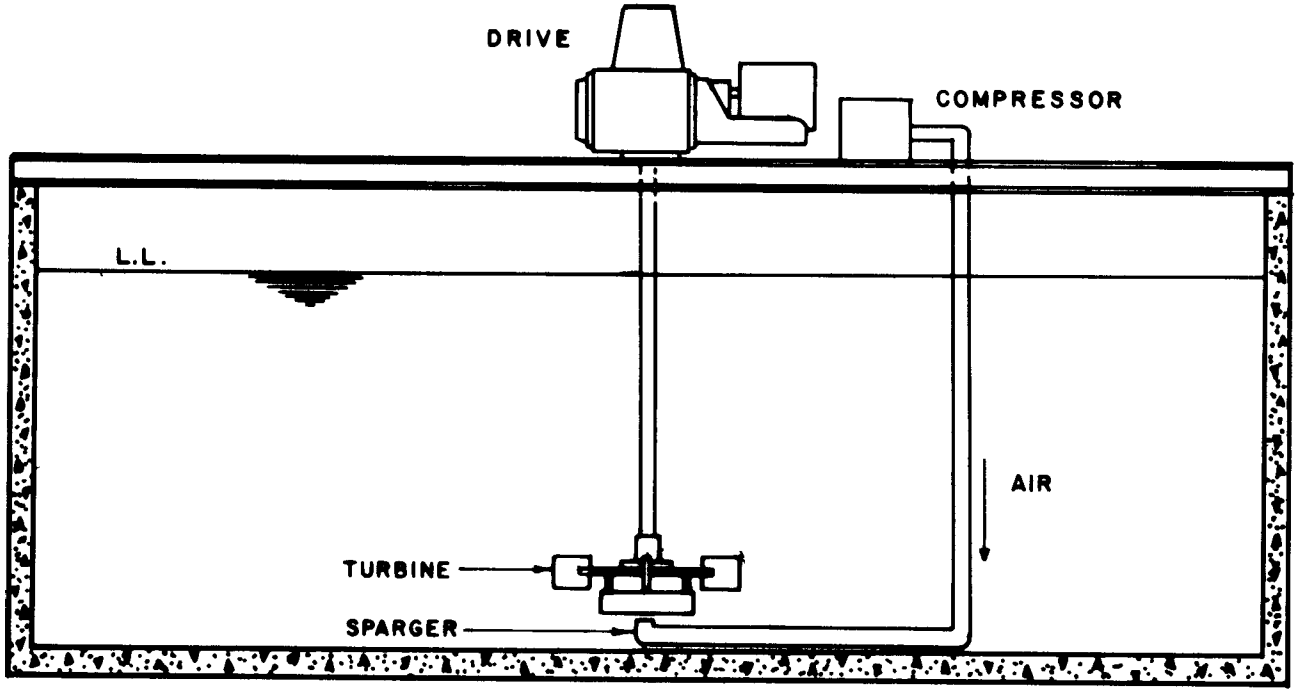

FIGURE 7-10

SCHEMATIC OF INSTALLATION FOR SUBMERGED TURBINE AERATOR

7.7.4 Surface-Type Aerators

The most recent improvement in aeration equipment for activated sludge systems is in the surface entrainment aerator. (A general design is shown in Figure 7-11). These turbine-type units entrain atmospheric air by producing a region of intense turbulence at the surface around their periphery. They are designed (if operated at a peripheral velocity of about 15 to 20 ft/sec [4.5 to 6 m/s]) to pump large quantities of liquid, thus dispersing the entrained air and agitating and mixing the basin contents. These aerators are the most efficient from a power consumption standpoint, because they will provide 2.8 to 3.5 lb/hp·hr (1.7 to 2.1 kg/kWh) of oxygen under standard conditions.

To attain optimum flexibility of oxygen input, the surface aerator can be combined with the submerged turbine aerator. Several manufacturers supply such equipment, with both aerators mounted on the same vertical shaft. Such an arrangement might be advantageous, if space limitations require the use of deep aeration basins.

7.7.5 Mixing Requirements

In addition to supplying the necessary oxygen, any aeration or oxygenation system must provide the necessary mixing and agitation of the aeration basin contents. This mixing requirement is usually expressed as the power needed per unit basin volume. For diffuser systems, this power requirement can be converted to an air requirement, which will amount to about 20 to 30 scfm of air per hour per 1,000 ft^3 (1.2 to 1.8 std $m^3/h \cdot m^3$) of basin volume. For aeration basins preceded by primary settling of domestic wastewater, the power needed, if using surface turbines whose peripheral velocity is 15 to 20 ft/s (4.5 to 6 m/s), is about 1/2 to 2/3 hp/1,000 ft^3 (0.013 to 0.018 kW/m^3). Without primary settling, the power needed to prevent settling out of wastewater solids is 3/4 to 1 hp/1,000 ft^3 (0.020 to 0.026 kW/m^3). For submerged turbines, as described in section 7.6.3, the turbine power should be about half the above figures, to insure proper mixing. Power input is not a sufficient criterion for keeping solids in suspension; manufacturers of such equipment should guarantee that their units will keep the MLSS at all points within plus or minus 10 percent of the average.

Another type of surface aerator is the Kessener "brush," which is commonly used in oxidation ditch systems. This aerator has a horizontal shaft spanning the basin, to which are attached radial prongs with some transverse members that impart, when rotating, intense agitation of the liquid at the surface and also induce a flow in the ditch of about 1 ft/sec (0.3 m/s) which keeps the activated sludge solids in suspension.

7.8 Nitrification

Nitrification (biological oxidation of ammonia to nitrates) is accomplished by a special group of aerobic organisms called nitrifiers. In the presence of oxygen, an inorganic source of carbon (carbon dioxide, carbonates, and bicarbonates), and ammonia, the bacteria *Nitrosomonas* will catalyze inorganic chemical reactions, producing nitrates. In turn, a second species of bacteria, *Nitrobacter,* produces nitrates from the nitrites. These autotrophic

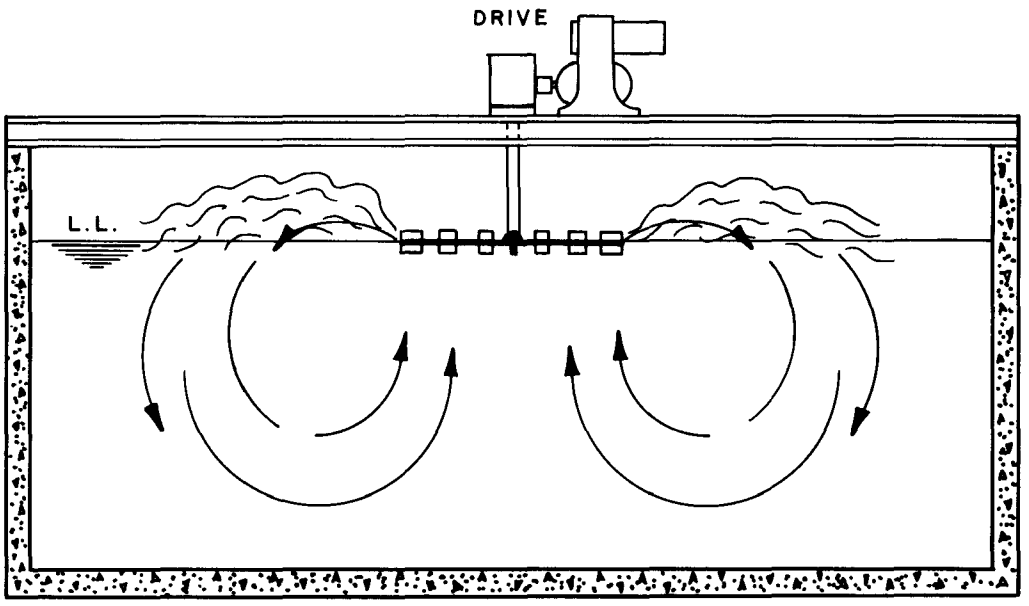

FIGURE 7-11

MECHANICAL SURFACE AERATOR

nitrifiers have a lower rate of population growth than the heterotrophic aerobes, which oxidize carbonaceous material–about 1 to 2 percent of the *E coli* growth rate (12). The nitrifiers are also temperature and pH sensitive, with little resistance to organic and inorganic toxicants.

An environment that will maintain a stable, healthy population of nitrifiers will satisfactorily reduce ammonia content for effluents requiring low ammonia. This environment can be accomplished in activated sludge units and in trickling filters and rotating biological contactors. Aerated facultative ponds with adequate recirculation and retention time can also maintain a healthy population of nitrifiers.

Because of their slow reproduction rate, the nitrifiers must be retained in adequate numbers in the nitrification unit for a relatively long period. This requirement means recirculation of sludge or nitrifying unit effluent containing a sufficient concentration of the nitrifiers to the influent of the nitrifying unit.

The optimum growth rate of nitrifiers occurs at a temperature of about 30° C and a pH of about 7.2 to 8.5, although some studies indicate that nitrifiers may become acclimated to a lower pH and reproduce at near the maximum rate (12). In activated sludge nitrification, the F/M is about 0.05 to 0.15 day^{-1}. The SRT should be greater (by a safety factor of about 1.8 to 2.0) than the reciprocal of the *Nitrosomonas'* growth rate constant, to allow for the upsets to nitrifier growth which can occur from shock loading in the wastewater influent (44). Figure 7-12 indicates the effluent ammonia-nitrogen concentration to be expected for single-stage, completely mixed nitrifier reactors for various k_m values.

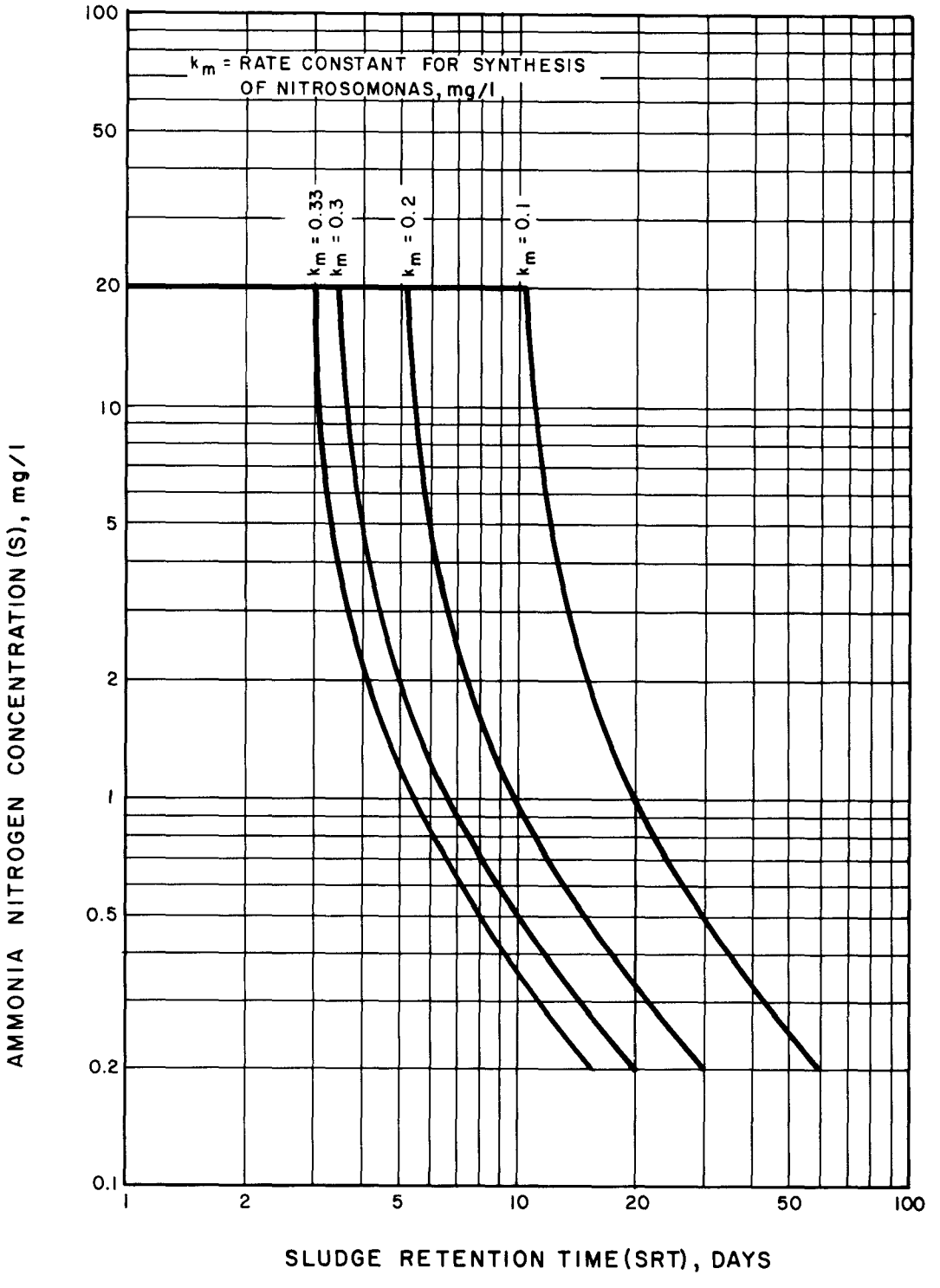

FIGURE 7-12

NITRIFICATION IN COMPLETELY MIXED ACTIVATED SLUDGE PROCESS

The growth rate of *Nitrosomonas* is described by the equation (13):

$$\mu = \mu_{max} \left[\frac{NH_4}{k_m + NH_4} \right]$$

where

μ = growth rate of *Nitrosomonas*, day^{-1}

μ_{max} = maximum growth rate, day^{-1}

NH_4 = concentration of ammonia, mg/l

k_m = concentration of ammonia, when $\mu = 0.5\ \mu_{max}$, mg/l

For *Nitrosomonas* at 20° C,

$\mu_{max} = 0.33\ day^{-1}$

k_m = 1.0 mg/l of ammonia-nitrogen

For *Nitrobacter* at 20° C,

$\mu_{max} = 0.14\ day^{-1}$

A typical variation of nitrification with temperature is shown in Figure 7-13 (44).

Ammonia-nitrogen concentrations of less than 60 mg/l do not usually inhibit nitrification (44).

Theoretically, alkalinity is destroyed by nitrification at the rate of 7.2 lb for each pound of ammonia-nitrogen oxidized to nitrate (44). If the influent alkalinity is not sufficient to leave a residual alkalinity of 30 to 50 mg/l after nitrification is completed, additions of lime, soda ash, or caustic soda may be required to hold the pH at the optimum level for the nitrifiers. At pH's below 7.8, the CO_2 resulting from nitrification will be washed out of the liquid by the aeration process, which will markedly reduce the lime requirements.

A summary of the conditions advantageous to nitrifier growth is given in Table 7-7.

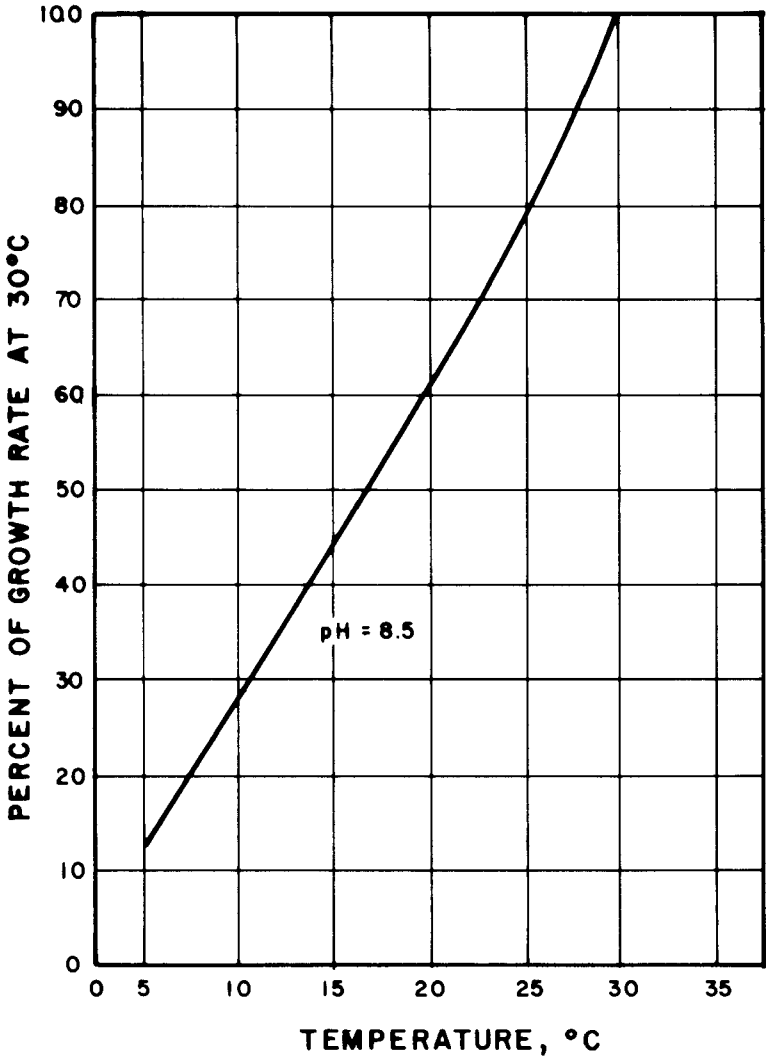

FIGURE 7-13

RATE OF NITRIFICATION AT DIFFERENT TEMPERATURES (44)

TABLE 7-7

SUMMARY OF CONDITIONS ADVANTAGEOUS FOR NITRIFIER GROWTH
(13) (44) (45) (46)

Characteristic	Design Value
Permissible pH Range (95 percent of Nitrification)	7.2 - 8.4
Permissible Temperatures (95 percent Nitrification), °C	15 - 35
Optimum Temperature, °C	30° (approximately)
DO Level at Peak Flow, mg/l	> 1.0
MLVSS, mg/l	1,200 - 2,500
Heavy Metals Inhibiting Nitrification	
Cu	< 5 mg/l
Zn	< 5 mg/l
Cd	< 5 mg/l
Ni	< 5 mg/l
Pb	< 5 mg/l
Cr	< 5 mg/l
Toxic Organics Inhibiting Nitrification	
Halogen-substituted Phenolic Compounds	< 0 mg/l
Halogenated Solvents	< 0 mg/l
Phenol and Cresol	< 20 mg/l
Cyanides and All Compounds From Which Hydrocyanic Acid Is Liberated on Acidification	< 20 mg/l
Oxygen Requirement (Stoichiometric, lb O_2/lb $NH_3 \cdot N$, plus Carbonaceous Oxidation Demand)	4.6
Maximum Clarifier Overflow Rate, gpd/ft^3	1,000

7.8.1 Two-Stage Nitrification

Because conditions for the oxidation of carbonaceous matter and nitrogenous matter are different, particularly during cold weather, two-stage activated sludge may be used for small plants if shock loadings or abrupt changes in temperature or pH are probable. In this system, the first stage is designed to oxidize the carbonaceous BOD_5 and the second stage is designed for nitrification. Essentially, this system is two separate activated sludge processes acting in series.

The first stage can be designed as a high-rate completely mixed unit, to lessen the impact of variations in loading. For normal NH_4^+ concentrations, the BOD_5 in the first stage clarifier effluent should be about 50 mg/l, to maintain a satisfactory MLVSS level in the second stage aerator, because the weight of cells synthesized from ammonia-nitrogen is only about 10 percent of the weight of the ammonia-nitrogen. The BOD_5 to NH_3-N ratio in the second stage should be between 2 and 4. Higher BOD_5 values lead to undesirably high solids content for good nitrification; lower values result in poor flocculation. Sludge return, sludge wasting, and oxygen control in the first stage are independent of those in the second stage.

The second-stage nitrification unit can then more easily be designed to carry an SRT matching the ammonia-nitrogen load, to prevent a "washout" of nitrifiers. Because the ammonia to be oxidized is soluble and is not adsorbed by the activated floc, it is not removed in the clarifier and its oxidation time is the same as the actual detention time. Because the rate of ammonia oxidation is essentially linear, plug flow is desirable in the second stage. Plug flow can be achieved in the second stage by dividing the aeration basin into three or more compartments in series, as shown in Figure 7-14. In two-stage systems, the first stage should be completely mixed, to reduce the possibilities of shock loadings on the nitrification unit. Provisions should be made in the design to maintain adequate amounts of alkalinity in the second stage influent; for example, lime addition to maintain a relatively uniform pH of about 7.4 to 7.6 during nitrification.

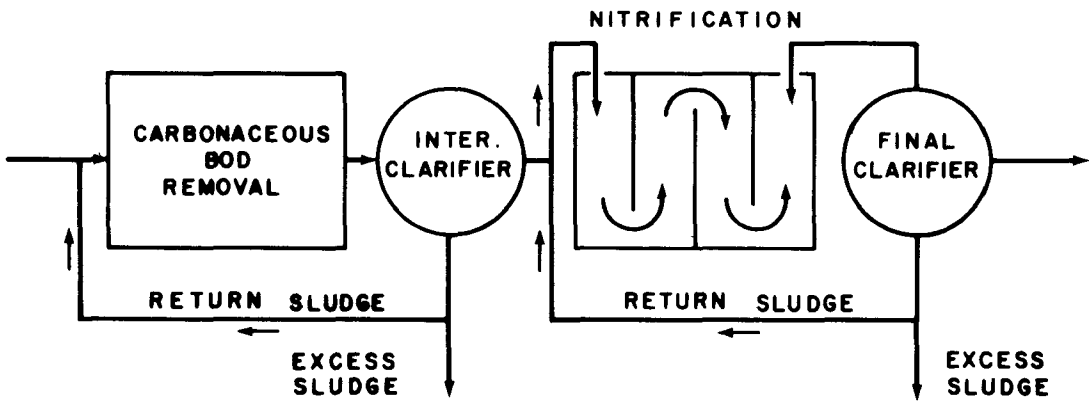

FIGURE 7-14

TWO-STAGE SYSTEM FOR NITRIFICATION

The extra capital and operating expense of a two-stage system for a small community is seldom justified; other alternatives should be examined.

7.8.2 Single-Stage Nitrification

If nitrification is not required during cold weather or 1 to 3 mg/l of ammonia-nitrogen in the effluent is permissible, single-stage nitrification may be used. Because nitrifiers are easily killed by shock toxic loadings or abrupt changes in pH or temperature, completely mixed extended aeration is most commonly used for single-stage nitrification (Figure 7-15).

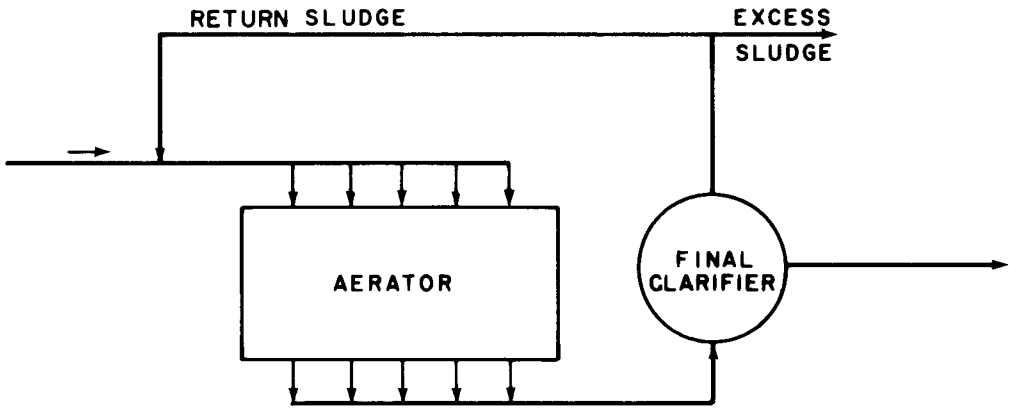

FIGURE 7-15

SINGLE-STAGE NITRIFICATION SYSTEM

For consistent single-stage (as in two-stage) oxidation of both carbonaceous and nitrogenous matter, the reactor must be designed and operated under loading conditions and controls that will insure maintenance of an adequate population of nitrifiers. The minimum SRT's necessary for nitrification (shown on Figure 7-12) were developed to predict the nitrification efficiency of a completely mixed reactor (15). In practice, a safety factor of 1.1 to 1.3 may be used, based on the probability of toxic of hydraulic shock loadings.

The F/M_V loadings should average about 0.05 to 0.15 lb BOD_5/day/lb MLVSS in a single-stage nitrification system and lower for nitrification below 5° C (40° F).

7.8.3 Denitrification

If the ammonia-nitrogen is oxidized to nitrate and the DO is less than about 1 mg/l (preferably 0.0 to 0.2 mg/l), heterotrophic bacteria can utilize the oxygen in the nitrates and nitrites for metabolism, releasing the nitrogen to the atmosphere as a gas. Controlled denitrification can take place in 1) a third-stage aerator-clarifier system, 2) a completely submerged rotating disk contactor system, or 3) a high-rate granular media filter. If a suspended growth system is used, the MLSS should be in the range of 2,000 to 3,500 mg/l (44).

The denitrification rate varies considerably with the temperature, as indicated in Figure 7-16 (44). Until more data on the effect of temperature on the denitrification of different nitrified wastewaters are secured, pilot studies will normally be necessary.

The effluents from nitrifying units are deficient in carbonaceous material. To supply the essential carbon nutrient, methyl alcohol (methanol), glucose (corn sugar), or a carbonaceous waste, such as brewery waste, is added. Each pound of nitrate requires about 2.5 to 3.0 lb of methanol, or its equivalent, to complete the reduction process. The methanol required can be estimated from the following equation:

$$\text{lb methanol} = [2.47(\text{lb of } NO_3 \cdot N \text{ reduced})] + [1.53(\text{lb of } NO_2 \cdot N \text{ reduced})] + [0.87(\text{lb of DO consumed})]$$

The amount of methanol to be added should match the denitrifier needs, to meet effluent BOD and N requirements; therefore, it may be necessary to equalize the loading, as a pretreatment process.

Because of the possible high concentrations of both nitrogen and carbon dioxide in the effluent of denitrification aerators, which create a supersaturated condition inhibiting settling, it is recommended that about 5 to 10 minutes of separate aeration be provided before clarification, to strip out gaseous nitrogen. After separate aeration, the settling properties of denitrification sludge are similar to conventional activated sludge.

7.9 Operation and Maintenance

The operational procedures for the activated sludge process prepared by the U.S. EPA National Field Investigation Center provide excellent information (1).

In activated sludge systems, it is customary to provide at least two aeration basins in parallel, so that if one must be taken out of service, the plant can operate with one basin for a short period (although it may be overloaded and the treatment deteriorate somewhat). Small plants (below 0.1 to 0.3 mgd [0.004 to 0.013 m^3/s]) would not normally have parallel aeration basins or dual clarification facilities; however, if reliably meeting effluent requirements is essential, two small plants should be constructed in parallel. Reliability guidelines, as established by EPA, may require (depending on where the effluent is discharged) spare motors and drives for any mechanical equipment. It is customary to provide a standby compressor for diffused air systems.

The most important control parameters in activated sludge systems are the DO in the aeration basin and the MLSS.

It is desirable to maintain a minimum aeration tank DO of about 1 to 2 mg/l. Initially, a plant will normally be underloaded, and the aeration may provide more DO than is required. There is no benefit in carrying higher than 3 to 4 mg/l of DO, if the aeration rate is kept reasonably adjusted to the oxygen requirements of the biomass in the aerator. If the DO levels are not controlled, localized regions may become saturated with oxygen or super-

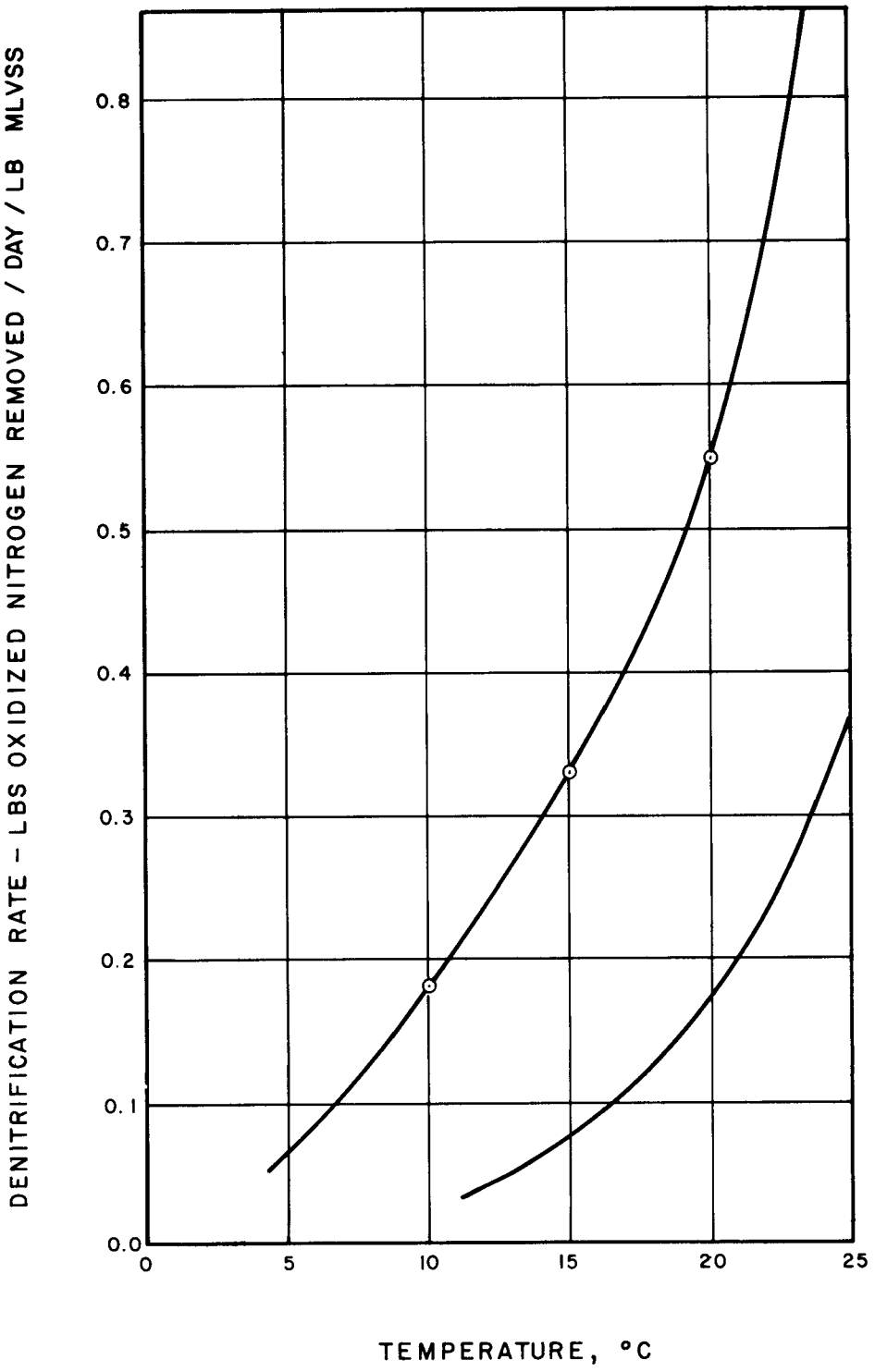

FIGURE 7-16

TEMPERATURE EFFECTS ON DENITRIFICATION (44)

saturated with nitrogen or carbon dioxide. These conditions lead to adsorption of fine bubbles on the floc, causing poor settling and possibly flotation. The aeration capacity of the aerators should be sufficiently flexible, to reasonably match the DO requirements of the variable wastewater flows and loadings.

If variations in loading cause poor BOD_5 or SS removal, some means of (at least) partial equalization of flows should be investigated.

During the plant startup period, it is important to establish the aerator mixed liquor characteristics that will most reliably meet effluent requirements. Factors characterizing the mixed liquor (e.g., the initial settling velocity, the size and relative concentration of floc particles, the clarity of the settled liquid, and the compactability of the settled sludge) can be established in a simple settleometer test (1). Such characteristics should be determined for various combinations of MLVSS in the aerator, F/M ratios, and SRT's when the influent wastewater has its highest and lowest temperatures and its largest daily variations in loadings. To obtain optimum effluent quality for plants employing primary clarification, the effects of each variation in effluent BOD_5 and SS must be monitored and evaluated. In addition, influent BOD_5, SS, VSS, temperature, and pH must be carefully noted, to enable plant personnel to make accurate judgments regarding operating conditions.

An emergency action that can be taken if the quality and character of the microbial solids deteriorate is adding powdered carbon to the wastewater entering the aeration basin and to the basin itself. Such short, periodic additions of carbon can improve the settling of the solids, adsorb toxicants, and reduce the soluble organic load the organisms must handle, thus providing rapid corrective action (44) (47).

Bulking sludge is an operational problem that occurs in higher loaded plants, if care is not taken to maintain 1) sufficient dissolved oxygen in the aeration basin, and 2) a sludge recycle rate high enough to keep the concentration of MLSS adequate and the loading within design limits. Bulking results from increased growth of filamentous bacteria at the expense of normal spherical bacteria and with resultant poor settling of the MLSS in the final clarifier (see Section 7.6). To correct this condition rapidly, the filamentous organisms, because of their large surface-area-to-volume ratio, can be selectively destroyed by large doses of chlorine or hydrogen peroxide. The latter is more effective, because it has a less deleterious effect on the desirable organisms (48).

If solids do not settle or settle poorly because of buoyancy caused by denitrification in the final clarifier, the addition of hydrogen peroxide to the secondary clarifier inflow is effective in suppressing such denitrification.

Most activated sludge treatment plants are affected by large variations in flow and loading more when the F/M loading is greater than 0.5 lb BOD_5/day/lb MLSS under aeration than they are when the F/M is below this value. Recovery from shock loadings usually takes place, without affecting the average plant effluent, during night and weekend low flow periods (13).

Provisions should be made to bypass a nitrification unit, if there are excessive concentrations of any substance that inhibits nitrifiers (see Table 7-7). If the nitrifier population is destroyed, it usually takes several weeks for recovery.

7.10 Example Design

7.10.1 Site and Wastewater Characteristics

Principally Domestic Wastewater

Limited Land at Plant Site, Elev. 1,000 ft (304 m)

Influent BOD_5, mg/l	200
Influent SS, mg/l	250
Influent VSS, mg/l	175
Influent NH_3-N, mg/l	20
Flow, gal/cap/day	100
Peak-to-Average Ratio	4:1
Average-to-Minimum Ratio	4:1
Population	2,000
Minimum Wastewater Temperature, °C	+15
Minimum Air Temperature, °C	−10
pH Range	7.2-7.8
Hexane Solubles, mg/l	75
Effluent BOD_5, mg/l	<30
Effluent SS, mg/l	<30

7.10.2 Design

Assumptions

Extended Aeration System

Two Duplicate Aerator-Clarifier Units

Pretreatment (Screening and Grit Removal Only)

F/M_v, lb BOD_5/day/lb MLVSS	0.10
MLSS, mg/l	4,000
MLVSS, mg/l	2,800

BOD_5 Loading (p. 7-2)

$$F = 8.34(Q)(L_i - L_e)/10^6$$

$$F = 8.34(200{,}000)(200 - 30)/10^6$$

$$F = 284$$

Micro-organism Mass in Aerator

$F/M_v = 0.10$

$M_v = 284/0.10$

$M_v = 2{,}840$ lb

Volume of Aerator (p. 7-14)

$V = [0.133(Q)(L_i - L_e)]/[(MLVSS)(F/M_v)]$

$V = [0.133(200{,}000)(200 - 30)]/[(2{,}800)(0.10)]$

$V = 16{,}150\ ft^3$

Sludge Retention Time (p. 7-16)

$SRT = 1/[a(F/M_v) - b]$

(assume a = 1.1 and b = 0.08)

$SRT = 1/[1.1(0.10) - 0.08]$

SRT = 33 days

Net Sludge Production (VSS to be wasted) (p. 7-16)

$M_w = (M_v)[a(F/M_v) - b]$

$M_w = 2{,}840[1.1(0.1) - 0.08]$

$M_w = (2{,}840(0.03) = 85$ lb/day (38.5 kg)

Liquid Retention Time (not including recycle flow)

$t = V/Q = (15{,}960)(7.48)(24)/200{,}000$

t = 14.3 hr

Minimum Aerator Liquid Temperature

For the short period liquid is exposed to cold air in the aerator and clarifier, and the many factors that determine the amount of heat loss, it is assumed in this example that the temperature drop is about 5° C (41° F) under design conditions. Therefore, the liquid temperature in the aeration chamber may drop to as low as 10° C (50° F).

Nitrification

At 10° C (50° F), with an SRT of 33 days and a liquid retention time of 14.3 hr, it can be assumed that nitrification will be relatively complete.

Oxygen Requirements

Carbonaceous Oxygen Demand (p. 7-19)

$O_{RC} = [a'(F/M_v) + b']\ M_v$

$O_{RC} = [0.55(0.10) + 0.15](2{,}840)$

$O_{RC} = 582$ lb/day (264 kg/day)

Where $a' = 0.55$

Where $b' = 0.15$

Nitrogenous Oxygen Demand (p. 7-19)

$O_{RN} = (4.6)(8.34)(Q)(\Delta NH_3)/10^6$

$O_{RN} = (4.6)(8.34)(200{,}000)(20)/10^6$

$O_{RN} = 153$ lb/day (70 kg/day)

Total Oxygen Required $= O_{RC} + O_{RN}$

$= 582 + 153$

$= 735$ lb/day (334 kg/day)

Aerator Selection

Since freezing is not likely to be a problem, and surface aerators are more efficient in the use of power, surface aerators will be selected for this design. If freezing were a problem, diffused aeration would be more efficient.

Power Requirements (p. 7-29)

For operation peripheral velocities of about 15 to 20 fps (4.5 to 6 m/s), use an aerator that under standard conditions, will provide 5.8 lb O_2/hp·hr (2.0 kg O_2/kWh). Under acutal conditions:

$$N = N_o \left[\frac{\beta C_{sw} - C_L}{C_s} \right] (\alpha)(1.024)^{T-20}$$

where

$N_o = 5.8$

$\beta = 0.95$

$C_{sw} = 9.6$ (from Figure 7)

$C_L = 2.0$ (assumed)

$C_s = 9.2$

$\alpha = 0.9$

$T = +15$

$$N = 5.8 \left[\frac{(0.95)(9.6) - 2.0}{9.2} \right] (0.9)(1.024)^{-5}$$

$N = (5.8)(0.77)(0.9)(0.888)$

$N = 3.6$ lb O_2/hp·hr

Power provided = (735)/(3.6)(24) = 8.5/hp·hr, or 4.5/hp·hr for each aerator

Aeration Tank

Provide two 15-ft-deep (4.5 m) square aeration basins with a common wall.

Area of each basin:

$A = 16{,}150/(2)(15)$

$A = 538$ ft^2 (50 m^2)

Clarifiers

Provide two clarifiers. Wastewater with an MLSS of 4,000 mg/l and a depth of 12 ft (3.6 m) at 20° C (68° F) will have an ISV of about 6 ft/hr (1.8 m/hr) and a peak overflow rate of about 1,100 gpd/ft^2 (44 m^3/m^2 d). At a liquid temperature of 10° C (50° F), the ISV might reduce to about 5 ft/hr (1.5 m/hr) and the peak overflow rate to about 800 gpd/ft^2 (32 m^3/m^2·day). The area required for each clarifier would then be:

$A = Q/(800)(2)$

$A = (200{,}000)(4)/1600$

$A = 500$ ft^2 (46 m^2)

The diameter of each would be:

$D = [4(500)/\Pi]^{0.5}$

$= 25$ ft (7.6 m)

The solids organic loading to the clarifier, with 100-percent recirculation would be:

$M_v/A = 2{,}800(8.34)(200{,}000)/(2)(500)(24)(10^6)$

$= 0.19$ lb/ft^2/hr (0.92 kg/m^2/hr)

or well below the limit of about 1.25.

If the solids concentration in the settled solids is 1 percent and the MLSS is 4,000 mg/l, the recycle flow would be (p. 7-18):

$Q_R = QS_s/(C_s - S_s)$

$Q_R = (200{,}000)(4{,}000)/(10{,}000 - 4{,}000)$

$Q_R = 133{,}333$ gal/day (503,998 l/day)

where $C_s = 10{,}000$ (assumed)

Emergency Operation

If one aerator-clarifier unit is out of operation, the plant could be operated as a conventional system. The F/M_v ratio could be increased to 0.4, which would still meet SS and BOD_5 effluent requirements of 30 mg/l each; however, the capability to meet shock loadings and maintain the MLVSS in the single aerator and clarifier units would be reduced.

VSS wasting would be increased to:

$$M_w = 2{,}840\ [(1.1)(0.40) - 0.08]$$

$$M_w = 1{,}022 \text{ lb/day } (463 \text{ kg/day})$$

The SRT would drop to:

$$SRT = 1/[(1.1)(0.4) - 0.08]$$

$$SRT = 2.8 \text{ days}$$

Therefore, nitrogenous oxygen demand would not be exerted.

If one clarifier must be removed from service, the MLSS concentration should be reduced to 2,000 or less and the MLVSS to about 1,400.

7.11 Case Study

7.11.1 Woodstock, New Hampshire, Oxidation Ditches

The Pemigewasset River, which flows through the town of Woodstock, has been classified for C use, requiring that the plant effluent does not 1) cause a reduction of the DO below 5 mg/l; 2) cause a pH outside 6.8 to 8.5; 3) contain chemicals inimical to fish life; 4) cause unreasonable sludge deposits; 5) cause unreasonable turbidity, slick, or odors; or 6) discharge unreasonable surface-floating solids. In addition, the State of New Hampshire ruled that a minimum of secondary treatment was necessary. To meet EPA requirements for secondary treatment effluents, the BOD_5 and the SS both must be reduced to 30 mg/l or less and the MPN of coliforms reduced correspondingly.

To meet these requirements, a wastewater treatment plant was constructed in 1971 which included bar screen, comminutor, wastewater pumps, two grit chambers, two oxidation ditches, two clarifiers, sludge storage tanks, chlorine contact chamber, sludge pumps, scum pit, and sludge drying bed. The configuration of this plant is shown on Figure 7-17. Design and operational data are listed in Table 7-8.

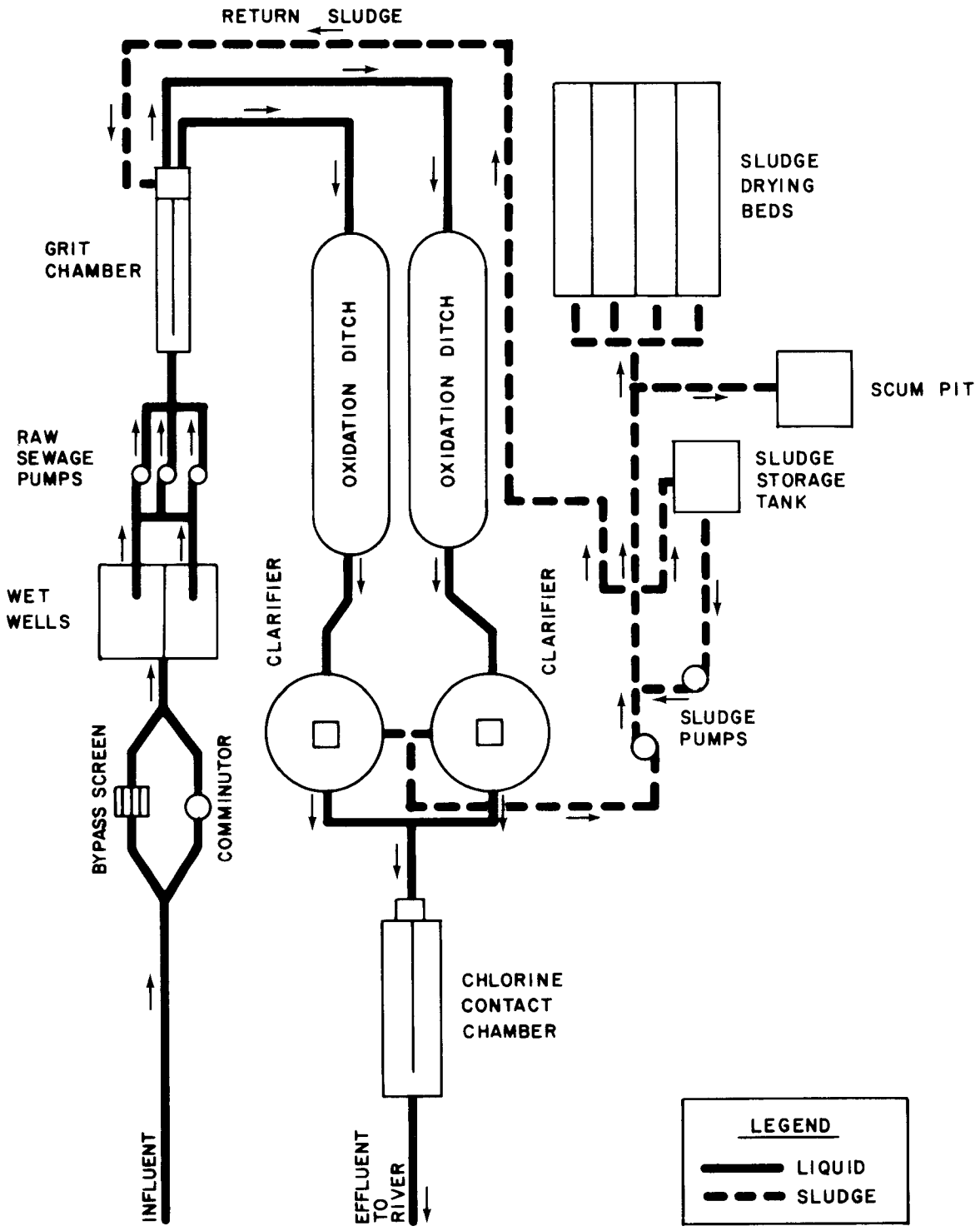

FIGURE 7-17

SCHEMATIC FLOW DIAGRAM – WOODSTOCK, N.H.

TABLE 7-8

WOODSTOCK, N.H., OXIDATION DITCHES

Design Data

Design Year	1990
Population To Be Served	1,100
24-Hr Flow	
Average, mgd	0.140
Maximum, mgd	0.650
Minimum, mgd	0.040
Raw Wastewater	
BOD_5, mg/1	220
SS, mg/1	215
VSS, mg/1	140

Aeration Tank	
F/M, lb BOD_5/day/lb MLSS	0.05
Sludge Recycle Ratio	1:1
Average Retention Time, hr	26
Surface Aerators, hp	12
Secondary Clarifier	
Maximum Overflow Rate, gpd/ft^2	550
Depth at Weir, ft	8
Retention Time at Max. Flow, min.	165

Performance Data, January 1974 to April 1975

	Primary Influent SS mg/1 min./max.[2]	Final Effluent SS mg/1 min./max.[2]	Aeration Tank MLSS mg/1 min./max.[2]	Sludge Volume Index min./max.[2]	Primary[1] Influent BOD_5 mg/1	Final Effluent BOD_5 mg/1	Flow mgd min./max.[2]
1974							
Jan.	20/92	6/10	3080/3590	91/118	144	5	.091/.138
Feb.	10/130	6/14	3330/4000	89/105	96	10	.088/.161
Mar.	18/92	2/10	2320/5180	83/136	72	7	.076/.161
Apr.	6/34	2/10	1980/4670	81/103	126	3	.087/.175
May	2/60	2/14	3000/4410	74/96	93	9	.093/.161
June	8/28	2/8	3680/4520	72/86	89	7	.093/.137
July	12/218	6/18	4100/4900	65/89	205	11	.098/.122
Aug.	10/170	2/8	3610/5150	81/111	298	9	.078/.130
Sept.	8/72	4/14	4220/5630	81/90	126	3	.070/.133
Oct.	14/66	6/14	5030/5640	88/95	124	5	.058/.116
Nov.	58/142	6/54	4430/7460	89/138	165	3	.060/.093
Dec.	20/108	6/14	3400/5360	86/102	141	5	.072/.129
1975							
Jan.	10/94	2/14	4020/5620	84/97	201	10	.070/.108
Feb.	22/128	2/16	3230/6190	73/106	132	22	.077/.102
Mar.	14/134	2/12	4710/6470	72/142	94	7	.066/.112
Apr.	24/100	4/14	3360/5740	72/75	102	7	.067/.140

[1]One composite sample a month analyzed for BOD.
[2]Minimum and maximum values in the month.

7.12 References

1. West, A.W., *Operational Control Procedures for the Activated Sludge Process,* part 1, observations, and part 2, control tests. U.S. EPA, National Field Investigation Center, Cincinnati (April 1973).

2. *Process Design Manual for Upgrading Existing Wastewater Treatment Plants.* U.S. EPA, Office of Technology Transfer (October 1974).

3. *Wastewater Engineering.* Metcalf & Eddy, Inc., New York: McGraw-Hill (1972).

4. Pasveer, A., *Developments in Activated Sludge Treatment in the Netherlands.* Proceedings, Conference on Biological Waste Treatment, Manhattan College, New York (April 1960).

5. Ullrich, A.H., and Smith, M.W., "The Biosorption Process of Sewage and Waste Treatment." *Sewage and Industrial Wastes,* p. 1248 (1951).

6. Ullrich, A.H., "Experiences With the Austin, Texas, Biosorption Plant." *Water and Sewage Works* (January 1957).

7. Smith, H.S., and Paulson, W.L., "Homogeneous Activated Sludge." *Civil Engineering* (May 1966).

8. *Full-Scale Parallel Activated Sludge Process Evaluation.* EPA Report R2-72-065 (November 1972).

9. Brenner, R.C., *Oxygen Aeration.* Presented at EPA Technology Transfer seminar (October 1973).

10. Speece, R.E., and Malina, J.F., *Applications of Commercial Oxygen to Water and Wastewater Systems.* Water Resources symposium No. 6, University of Texas, Austin (1973).

11. Tchobanoglous, G., *Wastewater Treatment for Small Communities.* Conference on Rural Environmental Engineering, Warren, Vermont (September 1973).

12. Unpublished data, Camp Dresser, & McKee Inc., Boston, Massachusetts (1974).

13. *Design Guides for Biological Wastewater Treatment Processes.* EPA Report No. 11010-ESQ-08/71 (August 1971).

14. *Standard Methods for the Examination of Water and Wastewater,* 13th ed. American Public Health Association (1971).

15. Unpublished data, EPA Cincinnati (1974).

16. Heukelekian, H., Orford, H.E., and Manganelli, R., "Factors Affecting the Quantity of Sludge Production in the Activated Sludge Process." *Sewage and Industrial Wastes,* vol. 23, pp. 945-957 (1951).

17. Bargman, R.D., and Borgerding, J., *Characterization of the Activated Sludge Process.* EPA Report EPA-R2-73-224 (April 1973).

18. Eckenfelder, W.W., and O'Connor, D.J., Proceedings 9th Industrial Waste Conference, Purdue University (1954).

19. Logan, R.P., and Budd, W.E., *Biological Treatment of Sewage and Industrial Wastes,* vol. 1. New York: Reinhold, p. 271 (1959).

20. Quirk, T.P., *Sewage and Industrial Wastes,* p. 1288 (1959).

21. Dick, R.I., and Ewing, B.B., "Evaluation of Sludge Thickening Theories," *Journal Sanitary Engineering Division.* ASCE, p. 9-29 (August 1967).

22. Javaheri, A.R., and Dick, R.I., "Aggregate Size Variations During Thickening of Activated Sludge." *Journal Water Pollution Control Federation,* vol. 41, part 2, R-197 (1969).

23. Ford, D.L., *General Sludge Characteristics, Advances in Water Quality Improvement, Physical and Chemical Processes.* Austin: University of Texas Press, p. 391 (1970).

24. Reed, S.C., and Murphy, R.S., "Low Temperature Activated Sludge Settling," *Journal Sanitary Engineering Division,* ASCE, vol. 95, SA4, p. 747 (1969).

25. Dick, R.I., *Thickening, Advances in Water Quality Improvement, Physical and Chemical Processes.* Austin: University of Texas Press, p. 358 (1970).

26. Eckenfelder, W.W., and Melbinger, N., "Settling and Compaction Characteristics of Biological Sludges." *Sewage and Industrial Wastes,* p. 1114 (1957).

27. Fischerstrom, C.N.H., et al., "Settling of Activated Sludge in Horizontal Tanks." *Journal Sanitary Engineering Division,* ASCE, SA3, p. 73 (June 1967).

28. Rudolfs, W., and Lacy, I.O., "Settling and Compacting of Activated Sludge." *Sewage Works Journal,* p. 647 (July 1934).

29. Geinopolos, A., and Katz, W.J., *U.S. Practice in Sedimentation of Sewage and Waste Solids, Advances in Water Quality and Chemical Processes.* Austin: University of Texas Press, p. 83 (1970).

30. Vesilind, P.A., "Discussion of Ref. 4." *Journal Sanitary Engineering Division,* ASCE, p. 185 (February 1968).

31. Downing, A.L., "Aeration in the Activated Sludge Process." *Journal of the Institute of Public Health Engineers,* Great Britain (April 1960).

32. Pipes, W.O., "Control Bulking with Chemicals." *Water and Wastes Engineering* (November 1974).

33. *The Impact of Oily Materials on Activated Sludge Systems.* EPA Report No. 12050-DSH-03/71 (March 1971).

34. "Aeration in Wastewater Treatment." WPCF Manual of Practice No. 5 (1971).

35. Dixon, N.P., *Nomograph-Dissolved Oxygen Degree of Saturation..* Utah State University, Logan, Utah (1968).

36. King, H.R., "Mechanics of Oxygen Adsorption in Spiral Flow Aeration Tanks." *Journal Water Pollution Control Federation,* vol. 27, p. 1007 (1955).

37. Downing, A.L., and Boon, A.G., *Oxygen Transfer in the Activated Sludge Process.* Proceedings, Conference on Biological Waste Treatment, Manhattan College, New York (April 1960).

38. Eckenfelder, W.W., and McCabe, J., "Diffused Air Oxygen Transfer Efficiencies." *Advances in Biological Waste Treatment,* New York: Pergamon Press (1963).

39. Downing, A.L., and Boon, A.G., *Oxygen Transfer in the Activated Sludge Process.* Proceedings, 3rd Conference on Biological Waste Treatment, Manhattan College, New York: Pergamon Press (1963).

40. Downing, A.L., Bayley, R.W., and Boon, A.G., *The Performance of Mechanical Aerators.* Institute of Sewage Purification, Great Britain (December 1969).

41. Kalinske, A.A., "Pilot Plant Tests on High-Rate Biological Oxidation Sewage." *Water and Sewage Works* (April 1950).

42. Eckenfelder, W.W., and Ford, D.L., "New Concepts in Oxygen Transfer and Aeration." *Advances in Water Quality Improvement,* Austin: University of Texas Press (1968).

43. Hughes, L.N., and Meister, J.F., "Turbine Aeration in Activated Sludge Processes." *Journal Water Pollution Control Federation,* vol. 44, p. 158, (1972).

44. *Nitrification and Denitrification Facilities,* U.S. EPA Technology Transfer Seminar Publication (August 1973).

45. Loveless, J.G., and Painter, A.A., *The Influence of Metal Ion Concentrations and pH Value on the Growth of a Nitrosomonas Strain Isolated From Activated Sludge.* Water Pollution Research Laboratory, Stevenage, Great Britain (October 1967).

46. Tomlinson, T.G., Boon, A.G., and Trotman, G.N.A., "Inhibition of Nitrification in the Activated Sludge Process of Sewage Disposal." *Journal of Applied Bacteriology,* vol. 29, No. 2, Great Britain (August 1966).

47. Adams, C.E., "Removing Nitrogen from Wastewater." *Environmental Science and Technology,* vol. 7 (August 1973).

48. Cole, C.A., et al., "Hydrogen Peroxide Cures Filamentous Growth in Activated Sludge." *Journal Water Pollution Control Federation,* p. 829 (May 1973).

CHAPTER 8

PACKAGE (PREENGINEERED) PLANTS

Commercially available wastewater treatment plants, commonly known as "package plants," are sold as prefabricated or in easily assembled standard components. Prefabricated plants, although available with capacities up to 1 mgd (3,780 m^3/d), are most commonly used for flows of less than 50,000 gpd (190 m^3/d). This chapter will discuss only plants 50,000 gpd in size or smaller. Most of these plants are biological facilities, although physical-chemical and fixed-growth system (trickling filters and rotating biological contactors) package plants have recently become available (1). The information in this chapter should be coordinated with the basic design considerations in chapters 7, 9, and 11.

The most common preassembled units employ some type of activated sludge process. These plants, since they were first used in the latter part of the 1940's, have been called "aerobic digestion" plants, "total oxidation" plants, and "extended aeration" plants. Extended aeration has been accepted as properly descriptive of most of these plants. Based on the average flow, the detention time in the aeration compartment is usually between 18 and 30 hr, if domestic wastewater is treated. Contact-stabilization type activated sludge package plants are also commonly used.

A detailed history of the development and performance of extended aeration and contact-stabilization plants is given in two reports of the National Sanitation Foundation (2) (3). In 1950, there were only about six plants, all in Ohio; at present, there are many thousands in all parts of the country. If properly designed, operated, and maintained, these plants can provide a good quality secondary effluent. Unfortunately, the majority of these plants do not reach this degree of treatment, because of unwise economies in design and installation and inadequate operation and maintenance. When these plants first came into use, the unfortunate and totally erroneous conclusion was made that there would be no excess sludge to be wasted. Consequently, the waste sludge went out with the effluent, resulting in the periodic appearance of excessive SS in the effluent.

Many of the smaller package plants can serve emergency or temporary treatment needs with a minimum of permanent installation costs. Under such circumstances, the area required may be a standard lot size, or less. However, it is usually best to maintain some space (preferably 50 ft [15 m] or more) between the property boundary and the treatment works, unless the facility is completely enclosed and designed to prevent noise and odor nuisance. Package treatment plants, like package pumping stations, can be built underground, to minimize adverse environmental impacts in built-up areas.

If properly designed, operated, and maintained, these plants can usually provide satisfactory treatment for small wastewater flows from housing developments outside metropolitan areas and businesses and other institutions in outlying areas that generate normal domestic wastewaters with reasonably consistent flow patterns. The inherently conservative design of the plants results in easier operation than conventional activated sludge systems but does not eliminate the need for proper operation.

A partial list of available biological package plants is shown in Table 8-1.

8.1 General Design Considerations

An important consideration in selecting and sizing these package plants is the average 24-hr flow and its diurnal variations. As stated previously, flows from small populations can exhibit extreme variability, both hourly and daily. Biological processes are not noted for their ability to take wide and sudden variations in organic load or hydraulic flow. Conservative design is, therefore, required, because the flow during several hours of the day could be many times the average 24-hr flow. By using extended aeration times and low BOD loading, the activated sludge process generally can tolerate wide variations in load during a 24-hr period.

To properly design the clarifier portion of a package activated sludge plant, several of the following considerations must be made:

1. The average MLSS to be used for design purposes (about 2,500 mg/l to 5,000 mg/l) will usually achieve better settling characteristics (3).
2. The peak overflow rate, including the flows used to control foam and scum return as well as sludge return, must determine sizing. As a general rule, the clarification area should be sized so that an overflow rate of 200 to 400 gpd/ft^2 (8 to 16 m^3/m^2·d) is not exceeded during peak flows. If in doubt, the smaller figure should be used.
3. Scum removal and return provisions are required, if a primary settling unit does not precede the aeration units. All package plants should be designed to retain floatables within the system. Clarifier skimmers should permit the operator to adjust the rate and frequency of skimming, to maintain scum removal most efficiently and to least interfere with solids settling. The amount of foaming will depend on the wastewater and the biodegradability of any surfactants or detergents present.
4. There should be at least 3 to 4 ft (0.9 to 1.2 m) of clear water between the water surface and the top of the sludge blanket, to prevent SS carryover into the effluent. To maintain this clear water depth, a total depth of at least 10 ft (3 m), and preferably 12, 13, or 14 ft (3.6, 3.9, or 4.2 m), should be provided if the MLSS is to be 4,000, 5,000, or 6,000 mg/l, respectively.

An evaluation of the package plant as an alternative treatment facility indicates both advantages and disadvantages to be considered before selection (4).

1. Advantages usually include:
   - Smaller land area requirement
   - Smaller hydraulic head loss
   - Fast and low-cost field installations
   - Reduced excess activated sludge
   - Generally little or no odor
   - Low capital cost

TABLE 8-1

COMMERCIAL BIOLOGICAL PACKAGE PLANTS

Manufacturer	Model	Capacity gpd	Remarks
EXTENDED AERATION			
Bio-Pure, Inc.	Model BP	600 - 10,000	Includes two-stage batch clarifier and batch chlorination
Can-Tex Industries	Tex-A-Robic	5,000 - 25,000	
		50,000 - 1,250,000	Field erected; circular tank
Clow (Aer-O-Flow)	Model S, SO, C	1,000 - 100,000	The larger plants must be field erected
Davco	6DA2-12DA40	2,000 - 40,000	
		50,000 - 500,000	
Defiance of Arizona	1.65 EA-40 EA	1,650 - 40,000	Field erected
Dravo Corp.	Mobilpack E	2,500 - 35,000	
	Aeropack E	30,000 - 2,000,000	Field erected
Eimco Corp.	ADC	2,000 - 1,000,000	
Extended Aeration Co.		500 - 46,000	Field erected for sizes greater than 15,000 gpd
FMC Corp., Environmental Equipment Div.	Model SS	1,000 - 5,000	
	Extended Aeration	7,500 - 15,000	
	Stepaire	35,000 - 175,000	Field erected
Keene Corp.	Oxy-Pak	1,000 - 20,000	
Lakeside Equipment Corp.	EA Aerator Plant	160,000	Uses cage rotors for aeration
	Spirojet EA and EA R	2,000 - 12,500	
Mack Industries	Model MV	1,500 - 150,000	
Marolf Hygienic Equipment Co.	Stress - Key	1,500 - 1,000,000	Field erected
Permutit-Sybron	Amcodyne E.A. Plants	4,000 - 25,000	
		30,000 - 225,000	Modular, field erected
Polcon Corp.	Polcon Package Plant	5,000 - 40,000	
Pollution Control, Inc.	Activator S	1,000 - 100,000	Field erected
Pollutrol Technology, Inc.	Puritrol	1,500 - 25,000	Batch operation
Purestream Industries, Inc.	Model P	3,000 - 100,000	
Puretronics	STP-600	1,000 - 25,000	
Purification Science, Inc.	Ecolog Systems	30,000 -	
		30,000 - 1,000,000	Field erected
Richards of Rockford, Inc.	Rich-Pack A	10,000 - 500,000	Field erected; requires construction of lined, earthen aeration basins
Smith & Loveless	Model B	15,000 - 35,000	
	Model D	17,000 - 35,000	
	Model CY	2,000 - 22,500	
	Model RE	72,000 - 360,000	Field erected
Suburbia Systems, Inc.	DCSC-50-DCSC-1000	50,000 - 1,000,000	
Stang Hydronics, Inc.	A-D	1,500 - 50,000	
Sydnor-Hydrodynamics	Centri-Swirl	2,000 - 50,000	

TABLE 8-1
(continued)

Manufacturer	Model	Capacity gpd	Remarks
Texas Tank, Inc.	A-D	1,500 - 50,000	
Topco Co.	Aero-Fuse		
Water & Sewage, Inc.	Model EA	3,000 - 20,000	
Water Pollution Control Corp.	Sanitaire Mark I, Mark II	1,000 - 35,000	
	Sanitaire Mark IV	30,000 - 2,500,000	Field erected; can also be operated as conventional, contact stabilization or step aeration process
CONTACT STABILIZATION			
Can-Tex Industries	Tex-A-Robic	30,000 - 50,000	Factory assembled; rectangular design
		50,000 - 1,250,000	Circular design
Clow (Aer-O-Flow)	Model CS	50,000 - 500,000	Can be operated as extended aeration plant at reduced capacity
Davco	11DAC 20 - 12DAC 70	20,000 - 70,000	Factory assembled
		50,000 - 500,000	
Dravo Corp.	Mobilpack C	10,000 - 20,000	Factory assembled; rectangular design
	Aeropack C	30,000 - 2,000,000	Factory assembled; circular design
FMC Corp., Environmental Equipment Div.	Stepaire	100,000 - 500,000	Can be operated as extended aeration or contact stabilization
	Stabilaire SL-150	20,000 - 50,000	Factory assembled; rectangular design
Gulfsten Bio-Con	BC20P - BC80P	20,000 - 80,000	
Lakeside Equipment Corp.	Spirojet CS	2,500 - 3,000,000	
Marolf Hygienic Equipment Co.		50,000 - 3,000,000	Custom designed; rectangular design
Permutit-Sybron	Amcodyne C.S. Plant	40,000 - 1,000,000	Rectangular design
Pollution Control, Inc.	Activator CS	10,000 - 120,000	
Purification Science, Inc.	Contact Stabilization System	30,000 - 1,000,000	
Smith & Loveless	Model B	15,000 - 35,000	
	Model D	17,000 - 35,000	
	Model CY	2,000 - 22,500	
	Model RE	72,000 - 360,000	Field erected
	Model V	2,000 - 90,000	Field erected
Walker Process Equipment	Sparjair	20,000 - 500,000	Circular design
Water & Sewage, Inc.	Model A	15,000 - 50,000	
Westinghouse	RCS	10,000 - 50,000	Rectangular units
		30,000 - 1,000,000	Circular units

TABLE 8-1
(continued)

Manufacturer	Model	Capacity gpd	Remarks
STEP - AERATION			
FMC Corp., Environmental Equipment Div.	Stepaire	100,000 - 500,000	Can be operated as extended aeration or contact stabilization
CONVENTIONAL ACTIVATED SLUDGE			
FMC Corp., Environmental Equipment Div.	Completaire	15,000 - 25,000	
Smith & Loveless	Model V	2,000 - 90,000	Field erected
Walker Process Equipment	Swirlmix	100,000 - 2,000,000	
Water Pollution Control Co.	Sanitaire Mark IV	30,000 - 2,500,000	Field erected; can also be operated as conventional, contact stabilization or step aeration process
COMPLETE MIX			
Dorr-Oliver, Inc.	100-500	100,000 - 500,000	

2. Disadvantages include possibilities of:
   High power costs
   High operation costs
   Noise pollution

8.2 Extended Aeration Units

Because these systems do not employ primary clarification, the treatment plant normally consists of a screen or comminutor, aeration basin, clarification compartment, and disinfection facilities. Because primary settling is not provided, the aeration basin should have sufficient agitation to keep in suspension the heavier solids not normally present in the MLSS of activated sludge plants. To insure sufficient agitation to prevent settling (excluding oxygen input requirements), the aeration compartment should have a power input of about 3/4 to 1 hp/1,000 ft^3 (2 to 2.5 kW/100 m^3), if mechanical aerators are used. For a diffused air system, there should be at least 30 cfm of air supplied per 1,000 ft^3 (1.8 $m^3/m^3 \cdot h$) of aeration volume.

The BOD_5 loading should insure that the maximum food-to-micro-organism (F/M) ratio is about 0.05 to 0.15 lb BOD_5/day/lb MLVSS. The MLSS is usually maintained in the range of 3,000 to 6,000 mg/l. The above loading for normal domestic wastewater is equivalent to a hydraulic detention time of about 1 day (24 hr) in the aeration basin at average flow. The average detention time may vary from 18 to 36 hr. At this BOD loading, the solids production is minimal. The excess solids, including the volatiles entering with the raw wastewater, which are not degraded, amount to about 0.3 to 0.5 lb/lb BOD removed, or about 400 to 1,200 lb of dry solids per million gallons (0.05 to 0.14 kg/m^3) of normal domestic wastewater.

The excess solids produced must be removed and disposed of. A separate sludge storage basin or compartment, which will hold the waste solids for at least 1 week and preferably 2 to 3 weeks, is desirable. This compartment can also serve as an aerobic digester, because it should be aerated to prevent septicity and the separation of solids. Aerobic digestion for about 7 to 10 days, if the liquid temperature is above 20° C, can result in a further reduction in volatile solids of up to about 30 percent, depending on the amount of endogenous respiration that took place in the activated sludge process (5).

Stabilized solids can be dewatered on a sand bed for eventual land disposal. In larger plants, mechanical sludge dewatering with vacuum filter or belt filter may be considered. Figures 8-1 and 8-2 illustrate two designs of extended aeration, activated sludge type package plants in which the flow is completely mixed. A positive means for sludge recycle is generally required for the proper performance of these plants.

The areation requirements for biological oxidation should be based on an oxygen input of about 2 lb/lb BOD_5 applied. This is equal to the ultimate carbonaceous BOD plus the oxygen requirements for oxidation of ammonia-nitrogen to nitrates (nitrification), which will generally occur because of the long sludge age (about 20 to 40 days). Nitrification should occur in well-designed and operated extended aeration plants, unless the liquid

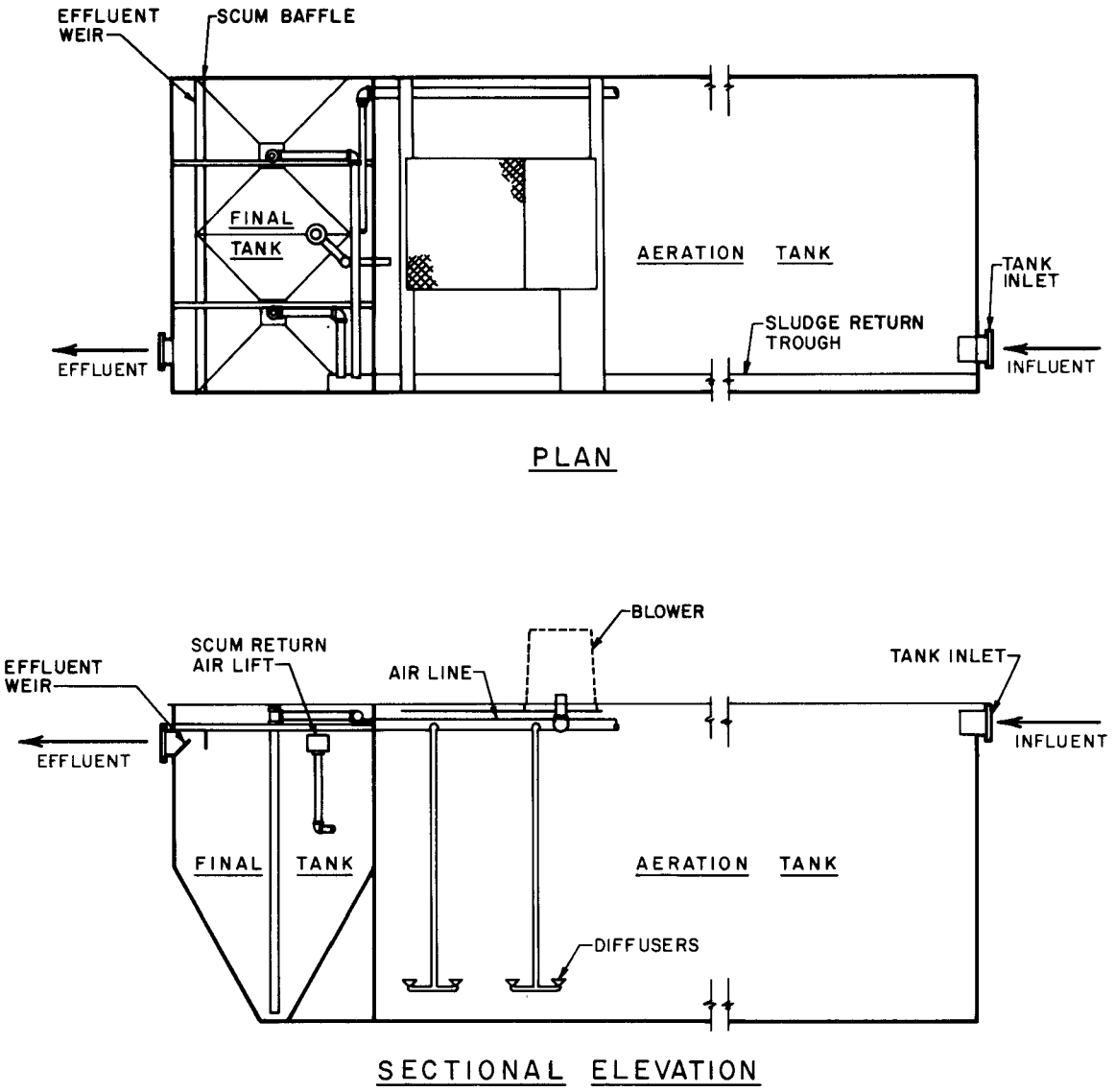

FIGURE 8-1

EXTENDED AERATION TREATMENT PLANT
WITH AIR DIFFUSERS

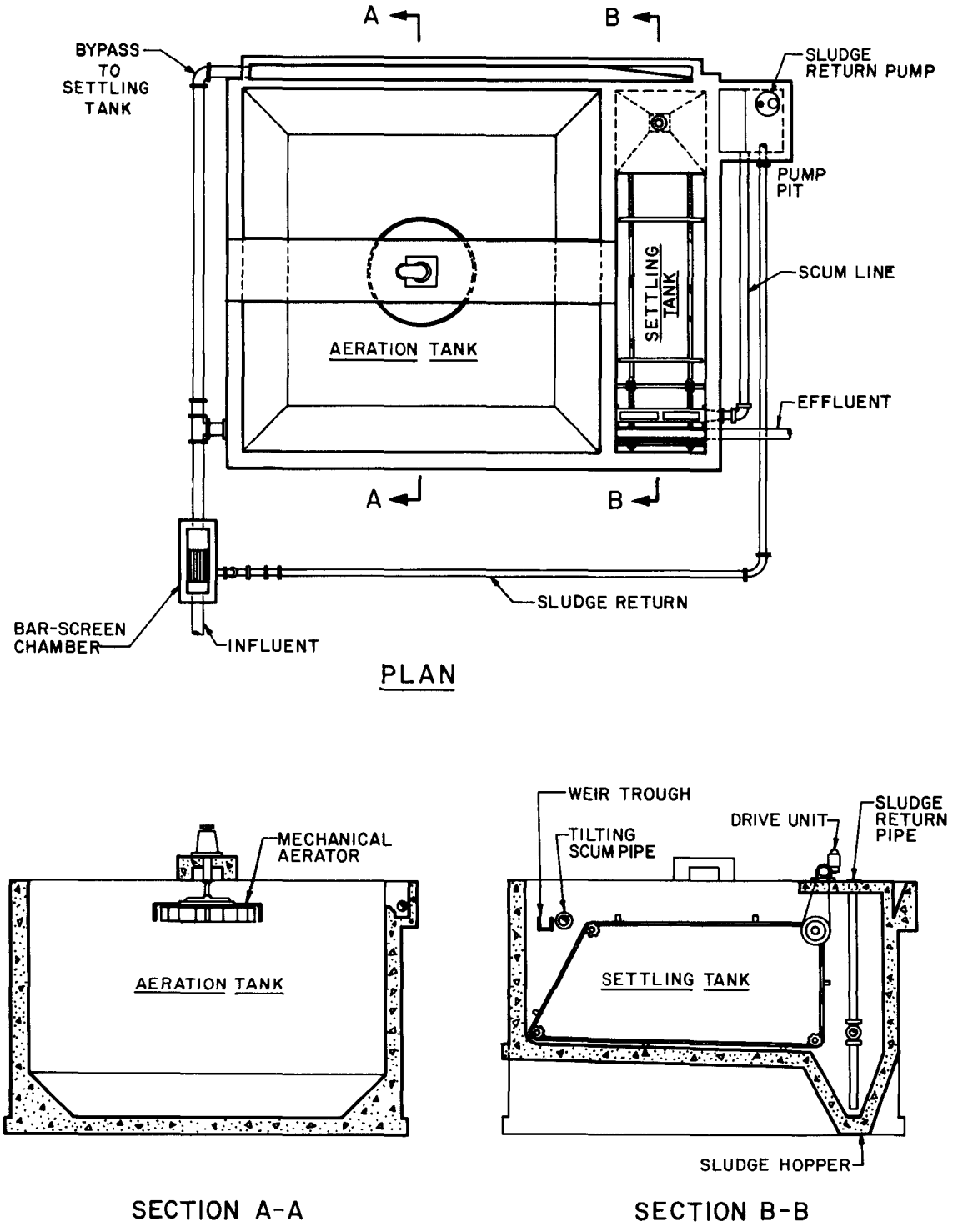

FIGURE 8-2

EXTENDED AERATION TREATMENT PLANT
WITH MECHANICAL AERATOR

temperature drops below 5° C (40° F). Nitrification may cause several problems in extended aeration system operation, including the following:

1. Sludge rising, if denitrification takes place (because of anaerobic conditions) and produces nitrogen gas, which tends to buoy up the solids, thus interfering with settling and sometimes causing flotation.
2. The oxidation of ammonia-nitrogen, producing nitric acid, may reduce the pH and affect process efficiency, if wastewater alkalinity is not sufficient to buffer the system.
3. Interference in the BOD_5 bottle test, if nitrification occurs, will indicate higher BOD_5 results than possible from first-stage carbonaceous oxidation.

Well-established extended aeration package plants will decrease ammonia-nitrogen to around 1 mg/1, if the aerator temperature is above about 55° F (13° C) (2). For more information on extended aeration systems, see chapter 7.

8.3 Contact Stabilization Units

The contact stabilization process has been incorporated into package plants (particularly for larger capacities), because it allows the total aeration basin volume to be reduced from that used in the single basin extended aeration process. The F/M ratio is comparable to that of the extended aeration systems, considering the total solids in the system outside the clarifier. However, F/M ratios are much higher, if based on the solids in the contact basin alone. Because the concentration of solids in the stabilization basin is two to three times the concentration in the contact basin, an aeration basin volume reduction is possible, if a contact-stabilization plant is designed in accordance with original criteria. However, there is evidence that, incorporated into package plants, this process lacks stability and does not provide the BOD and SS removal efficiencies expected (6). Contact-stabilization is most valuable for wastewater in which most of the BOD is suspended or colloidal and the flow is quite uniform.

If time in the contact chamber becomes extended, basic design criteria are violated in terms of BOD loadings. The characteristics of the solids in the contact chamber depend on the organic and biological loading and the extent of biological activity in that chamber. The contact-stabilization process, as originally designed and tested, had a detention time of 20 to 40 minutes in the contact chamber. Suspended and colloidal organic solids and some of the soluble organic solids are adsorbed by the well-oxidized sludge coming from the stabilization chamber. However, if the detention time in the contact chamber reaches 1.5 to 2 hr, biological activity may start and result in a high rate activated sludge process, with a reduction in settleability and more SS in the clarifier effluent. Unfortunately, the detention cannot be kept at 20 to 40 minutes over the wide range of flows coming to small treatment plants, without prior flow equalization. To maintain the detention time at 20 to 40 minutes in the contact chamber at the time of peak flow during the day, the contact time for the 24-hr average flow would be 1 to 2 hr or more. Some State and other regulatory agencies require a contact chamber detention time of 2 to 3 hr at average flow. These longer contact times make the contact-stabilization process less efficient and less effective (6).

Contact stabilization should be used only for larger, more uniform flows, or if flows to the plant have been equalized. The size of the contact chamber should be sufficient to maintain a detention time of about 20 to 40 minutes most of the time. It is unlikely that effluent standards can be met using contact stabilization in plants smaller than 50,000 gpd (200 m^3/day), without some prior flow equalization. In plants sized for future capacity, flexibility should be incorporated in the design of the contact chamber, so its size can be reduced for the low flows during the initial period of plant operation. Flexibility can be attained by dividing the contact chamber into two or three compartments and using only one or two initially. The compartments not in use can be connected to the stabilization section. Stabilization can be increased to nearly 25 hr (from the normal 3 to 6 hr), to make the unit less sensitive to shock or toxic loadings. An integral aerobic sludge digester can also be incorporated in the plant for the waste activated sludge, as shown in Figure 8-3.

The MLSS is usually 1,000 to 3,000 mg/l in the contact basin and 4,000 to 10,000 mg/l in the stabilization, or reaeration, chamber. About 0.7 to 1.0 lb (0.32 to 0.45 kg) of O_2 is required for each lb of BOD_5 removed, or 800 to 1,200 cfm (24 to 36 m^3) of air per pound of O_2 removed. The sludge generated varies from about 2,500 to 10,000 gal/million gal of plant influent.

Nitrification cannot be expected to occur in a contact-stabilization plant, because 1) the ammonia in the liquid is poorly adsorbed by the solids in the contact chamber, and 2) the time is not sufficient. Some nitrification will, of course, occur in the stabilization basin, particularly if a long detention period is provided, but the ammonia present in the major portion of the raw wastewater will pass out with the effluent from the contact basin.

8.4 Rotating Biological Contactor (RBC) Units

These units are widely used in Europe in small prefabricated plants–there are over 700 installations in West Germany, France, and Switzerland. They afford stable operation, if conservatively sized; with hydraulic loadings of 0.25 to 1.55 gpd/ft^2 (0.01 to 0.06 $m^3/m^2 \cdot d$), they will produce 85 percent BOD_5 removal to liquid temperatures of 40° F (5° C). For low temperature operation, the loading should be below 1 gpd/ft^2 of disk area (0.04 $m^3/m^2 \cdot d$) (7). They are now being designed and constructed in the United States.

Because the flow velocity and turbulence in the compartment containing the disks are not high enough to keep heavy primary wastewater solids in suspension, a primary settling unit must precede the disks. Solids would, then, be wasted from both primary and final clarifiers for treatment and disposal. Recirculation of solids or liquid has not normally been practiced with RBC's.

The advantages of these units are low maintenance, low power, minimal odor and fly nuisance, and low noise levels. However, the units should be housed to prevent damage to the disks by high winds and vandalism, to keep heavy rains from washing the growth off the disks, and to prevent freezing problems. Figure 8-4 illustrates a package plant of this type.

In rotating biological contactors at hydraulic loadings of under 1 gpd/ft^2 (0.04 $m^3/m^2 \cdot d$) of disk area, nitrification may occur on the disks toward the end of the flow-through chamber

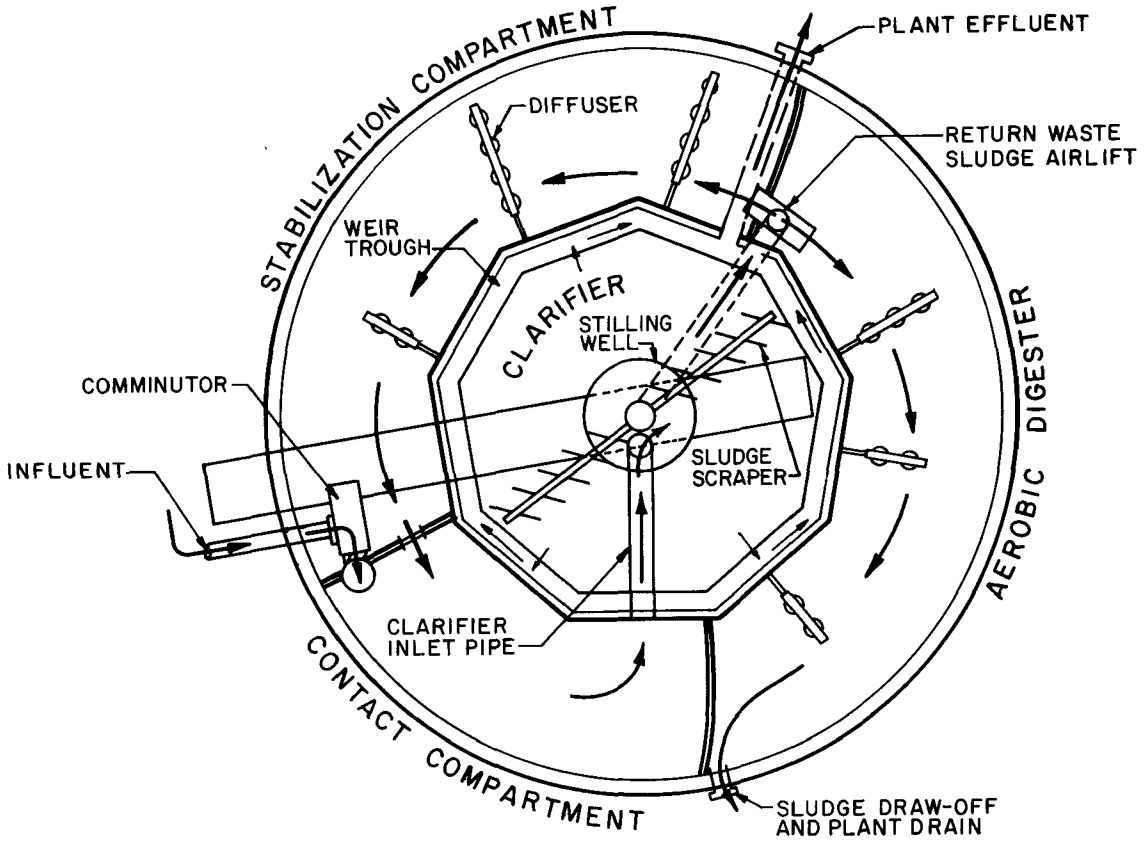

FIGURE 8-3

CONTACT STABILIZATION PLANT
WITH AEROBIC DIGESTER

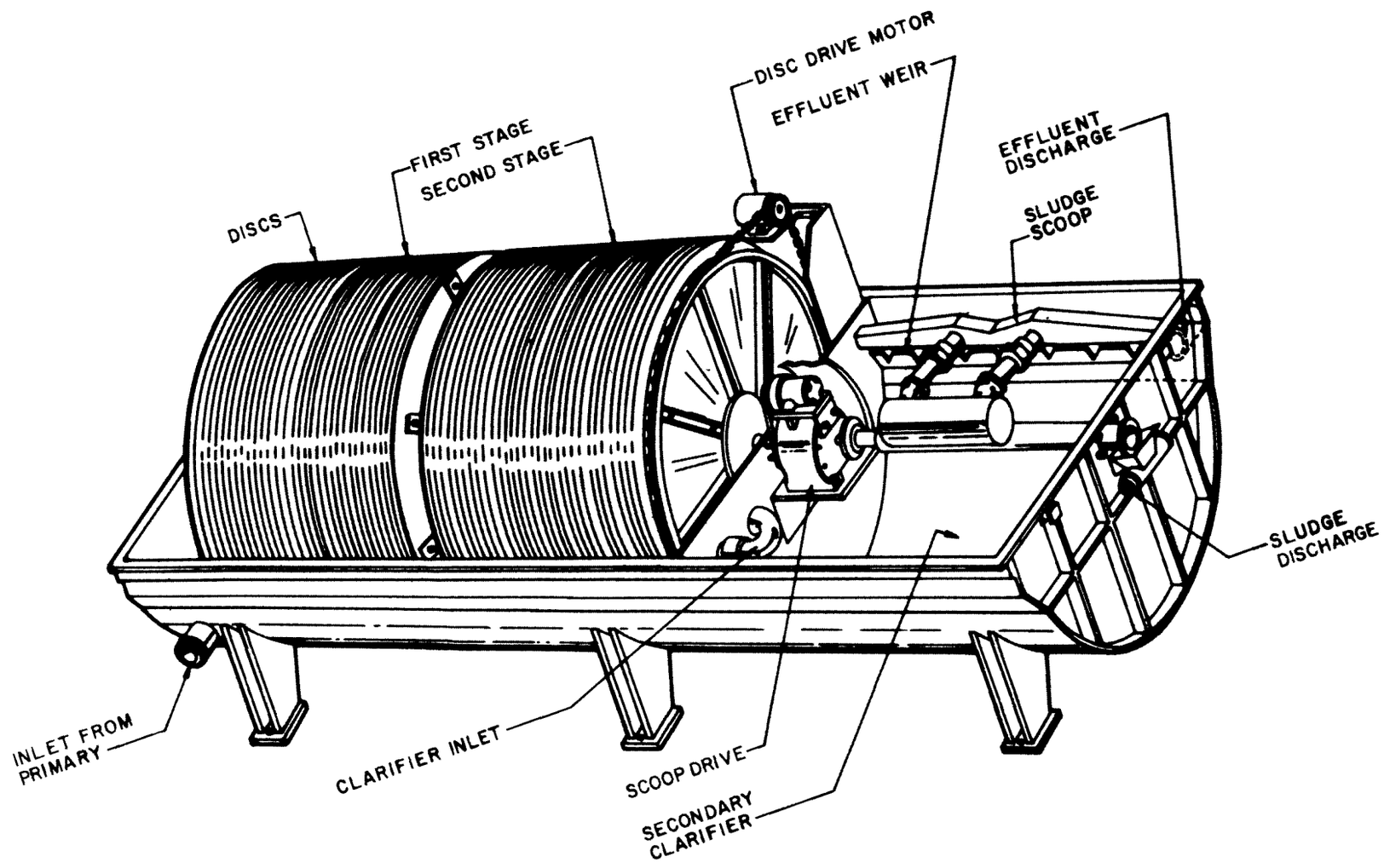

FIGURE 8-4

BIO-DISC TREATMENT PLANT

at liquid temperatures down to about 40° F (about 5° C). The solids production from these units, at the low loadings, will be about 0.3 to 0.7 lb/lb BOD removed; they may concentrate to 2 to 3 percent in the final clarifier (7). Loadings of 2 to 6 lb BOD_5 applied per day per 1,000 ft^2 (0.01 to 0.03 kg/m^2) of disk surface have been recommended as the maximum (8). Power requirements are reported to be about 0.2 hp·hr/lb BOD_5 removed. For more information on RBC's, see chapter 9.

8.5 Physical-Chemical Package Units

The typical flow diagram for a commercial physical-chemical (P-C) wastewater treatment plant is shown on Figure 8-5 (9). The plant can treat wastewater that has been screened or comminuted and degritted. The first step of the system is chemical coagulation followed by clarification. After clarification, the flow enters a downflow carbon compartment for filtration and some removal of soluble organics. Additional removal of the soluble organics occurs in a following upflow carbon compartment.

For domestic wastewater, an effluent with about 25 mg/l COD and 10 mg/l of BOD, with SS below 5 mg/l, can be obtained. Phosphorus as P can be reduced to less than 0.5 mg/l; color and turbidity can be minimized. The activated carbon is normally disposed of as it is exhausted, because regeneration for small plants is not cost effective.

Different chemicals tend to generate different amounts of sludge (see section 13.2):

1. Lime generates 6,000 to 14,000 gal/mgd of plant influent, with 6 to 10 percent dry solids.
2. Alum generates 10,000 to 30,000 gal/mgd of plant influent, with 0.5 to 1.5 percent dry solids.
3. Iron salts generate 10,000 to 25,000 gal/mgd of plant influent, with 1.0 to 2.5 percent dry solids.

Both the operating costs and capital costs of this type of plant, in contrast to activated sludge package plants, are relatively high. The plant can be started and stopped without large adverse effects on treatment; it can produce a high quality effluent with a low BOD and phosphorus. However, ammonia cannot be removed, unless additional processing is added to the basic sequence. For more information on physical-chemical units, see chapters 12 and 13.

The use of physical-chemical package plants has been largely restricted to cold climates, where their small size, "on-off" operation, and high reliability are requisite. However, additional application will undoubtedly occur, because of their inherent resistance to toxic compounds in wastewaters and ability to remove heavy metals and refractory compounds. Physical-chemical package plants are primarily available in two generalized processing schemes: granular carbon and powdered carbon systems.

The granular carbon systems are generally similar to the schematic diagram shown in Figure 8-5. Powdered carbon systems employ simultaneous chemical coagulation and powdered carbon contacting in a single step. Final solids and powdered carbon removal may be accomplished by sedimentation and/or filtration.

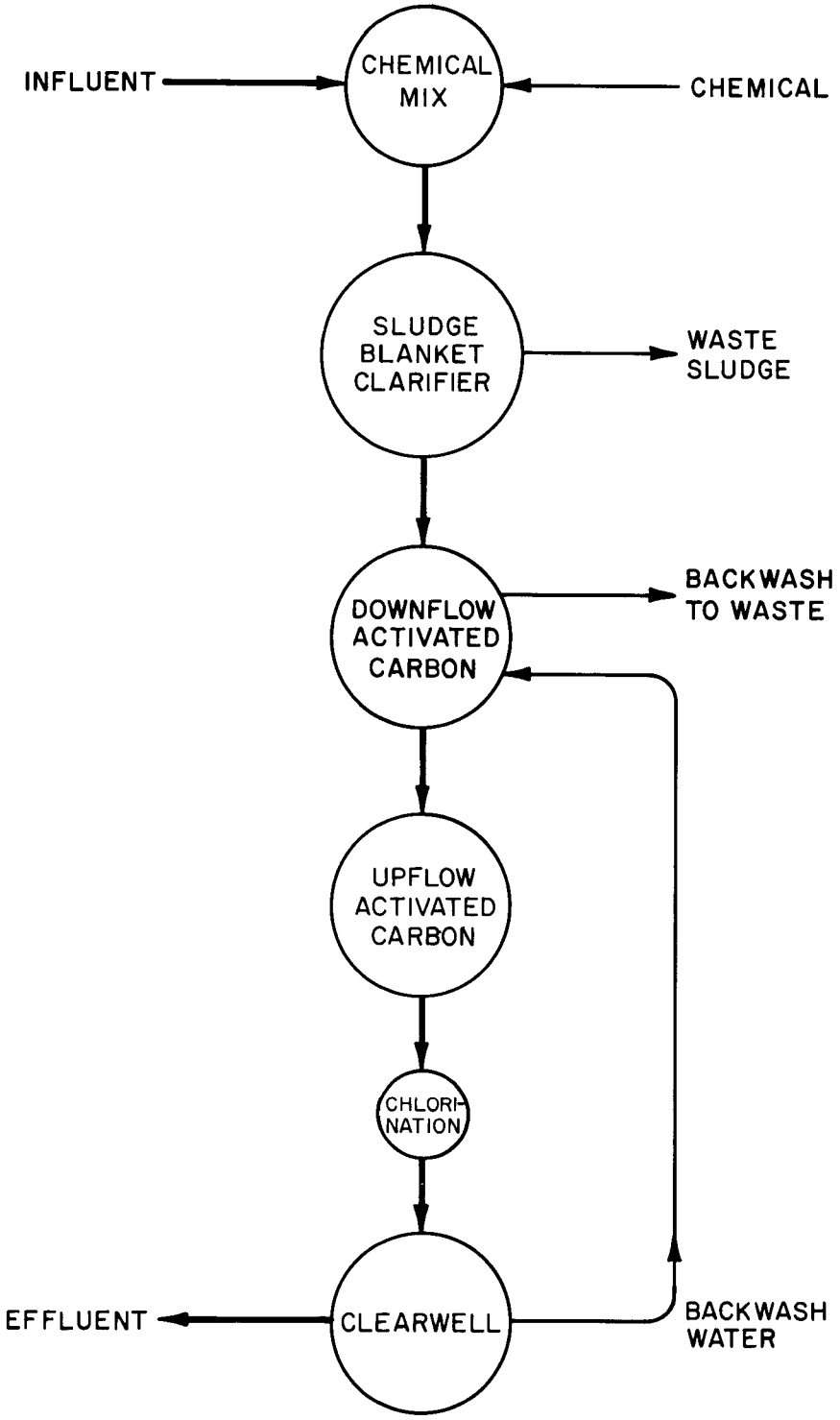

FIGURE 8-5

FLOW DIAGRAM FOR PHYSICAL-CHEMICAL TREATMENT PLANT (9)

8.6 Operation and Maintenance of Activated Sludge Package Units

The major design problems that affect field operation of the package activated sludge units include (10):

1. Hydraulic shock loads–the large variations in flow from small communities, accentuated by the use of oversize pumps where wastewater is pumped
2. Very large fluctuations in both flow and BOD loading
3. Very small flows that make difficult the design of self-cleansing conduits and channels difficult
4. Inadequate or nonpositive sludge return, requiring provisions for a recirculation rate of up to 3:1, for extended aeration systems to meet all normal conditions
5. Inadequate provision for scum and grease removal from final clarifier
6. Dentrification in final clarifier, with resultant solids carryover
7. Inadequate removal and improper provision for handling and disposing of waste sludge
8. Inadequate control of MLSS in the aeration tank
9. Inadequate antifoaming measures
10. Large and rapid temperature changes
11. Inadequate control of air supply

Possibly, the major factor causing poor performance is directly related to the quality and amount of operator attention. Unless such plants receive at least some attention and maintenance daily from a qualified operator, they should not be installed, because the effluent quality will invariably be quite poor. For more information on staffing requirements for operation and maintenance, see chapter 16.

O & M requirements for physical-chemical plants, established by manufacturers to necessitate from 2 to 4 hr daily, involve chemical makeup, sludge handling, and preventive maintenance procedures common to other plants.

In cold climates, small plants may experience operating problems. In such climates, it is preferable to install one plant in the ground and/or to house it, to conserve heat. A long aeration period dissipates heat, particularly if mechanical surface type aerators are used. Such aerators should be designed to prevent freezing from liquid splashed on metal parts and the platform. If such plants are installed in northern climates, diffuser systems, with compressed air, should be used for the oxygen supply.

If it is known that operation and maintenance may be minimal, one or more of the following should be considered for inclusion in the specifications:

1. Flow recorders for influent, return sludge, and effluent
2. Sampling connections, or ports, with easy access
3. Automatic air regulation
4. Automated variations in submergence of surface aerators
5. Continuous DO recorders
6. Automatic adjustable skimming mechanisms

7. Automatic defoaming sprays
8. Automatic timing of periodic operations, such as skimmers, return sludge, sludge wasting, and air blower

Some suggestions to improve and maintain the efficiency of package plants are:

1. All pumps, laboratory equipment, and supplies necessary for good performance should be placed in a control building onsite.
2. A schedule showing all regular and intermittent maintenance procedures and emergency procedures should be posted.
3. A minimum schedule of required daily and intermittent tests and process observations should be established.
4. A simple but complete operation and maintenance manual, keyed to the capability of the probable standby operator should be required.
5. Adequate training of operators, assistant operators, and replacement operators should be provided.
6. An adequate supply of the equipment and material required to maintain, monitor, and control the safe, efficient, and simple operation of the facilities should be specified.
7. The plant should be designed for good public relations, by providing for odor, noise, and landscaping control.
8. Regular wasting of digested sludge to a dewatering facility (such as a sludge drying bed) before final disposal should be provided.
9. Pumps or blowers should be placed beside, and not above, aeration tanks or clarifiers as a safeguard against dripping oil and dropped tools entering the units.
10. Tank covering guards and high, locked fences of good quality should be provided.
11. Adequate, handy sources of water for cleaning purposes should be provided.

Additional information on the operation of package treatment plants can be found in references (2) (6) and (10).

8.7 Case Studies

8.7.1 Physical-Chemical Package Plant

A Met-Pro physical-chemical package plant was installed at Indian Hills Housing Development, Lower Salford Township, Pennsylvania, and put into operation in the first part of May 1974. Engineering data and test results of samples taken on 8 May 1974 and 6 June 1974 are shown in Table 8-2. A schematic plan showing the movement of wastewater, sludge, and chemicals in the plant is shown on Figure 8-6 (11).

Comminuted wastewater is pumped from an equalizing tank (not shown) by raw waste pump (a) to flash mix tank (b). Coagulant feeder (c) delivers a proportional amount of chemical solution to the flash mix tank, where intimate contacting is accomplished by means of a high speed agitator. From the flash mixer, the wastewater flows by gravity into the flocculating section of the clarifier (d), where gentle agitation promotes floc formation.

TABLE 8-2

DATA FOR A PHYSICAL-CHEMICAL PLANT

DESIGN CRITERIA

Capacity	Overall Size
7,000 gpd	8 ft × 7 ft × 8.7 ft

Shipping Wt, lb	Hp
5,700	2.75

OPERATING DATA

Sample Source	COD mg/l	BOD_5 mg/l	SS mg/l	Total P mg/l
May 8, 1974				
Raw Influent	360	107	262	2.31
Clarifier Effluent	40	18	4	0.14
Adsorber Effluent	20	6	12	0.80
Filter Effluent	10	10	<1	0.66
June 6, 1974				
Raw Influent	487	212	316	12
Clarifier Effluent	112	61	62	0.38
Adsorber Effluent	28	8	16	0.42
Filter Effluent	18	10	8	0.13

As sedimentation takes place in the clarifier, the settleable solids are collected and are pumped (e) to disposal. A disposable media filter (f) is an option for sludge concentrating prior to ultimate disposal (11).

A controlled amount of chlorine solution is pumped into the surge and disinfectant contact tank (j) for disinfection. The clarifier effluent flows up through the granular carbon adsorber (h), for removal of dissolved organic materials, and into the surge tank (j). Air is fed into the bottom of the adsorber aerator (i), maintaining the fluidized carbon bed in an aerobic condition. Filter pump (k) pushes the disinfected wastewater through the pressure filter (m) for final polishing.

8.7.2 Extended Filtration Package Plant

The national Sanitation Foundation (NSF) evaluated the performance of the Aquatair Model P-3 package treatment plant in June 1974 and reported that the system incorporates

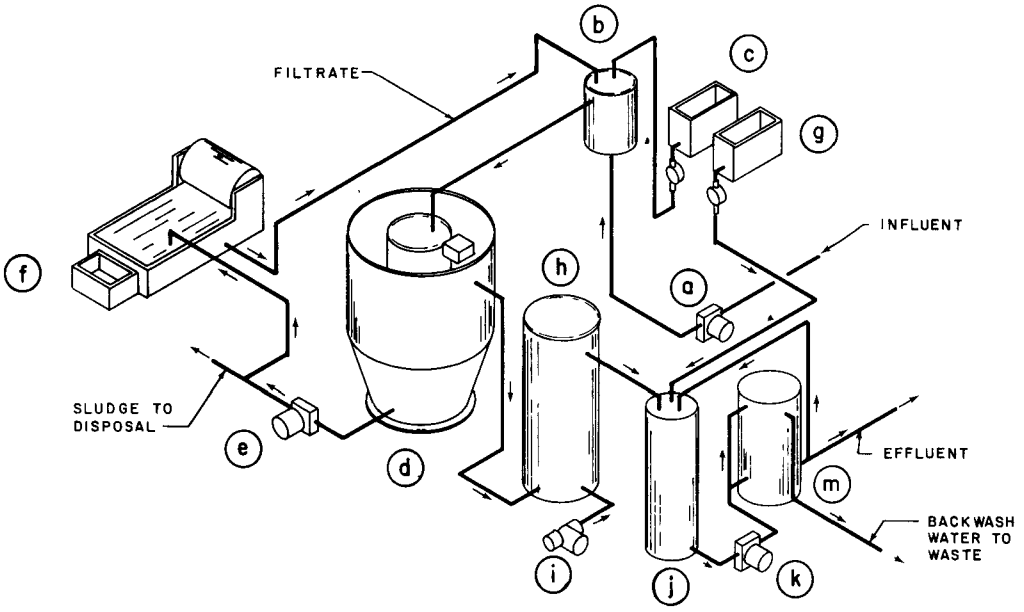

LEGEND

- (a) RAW WASTEWATER PUMP
- (b) FLASH MIX TANK
- (c) COAGULANT FEEDER
- (d) FLOCCULATOR - CLARIFIER
- (e) SLUDGE PUMP
- (f) DISPOSABLE MEDIA FILTER
- (g) DISINFECTANT FEEDER
- (h) UPFLOW GRANULAR CARBON ADSORBER
- (i) ADSORBER AERATOR
- (j) SURGE & DISINFECTANT CONTACT TANK
- (k) FILTER PUMP
- (m) PRESSURE FILTER

FIGURE 8-6

MET-PRO PHYSICAL-CHEMICAL
PACKAGE TREATMENT PLANT (11)

biological treatment of organic matter in a high rate bio-oxidation tower and an air-injected recirculation/aeration chamber. The extended filtration system is a superrate trickling filter, with recycling of sludge only from the final clarifier to the filter influent (12). The unit tested was designed to treat 3,000 gpd (11.4 m^3/d), with about 5 lb/day (2.29 kg/day) of BOD_5, in a 16-hr interval, effective at a maximum of 187.5 gpd (0.71 m^3/d). Characteristics of Aquatair systems and typical NSF performance data are presented in Tables 8-3 and 8-4.

Raw wastewater enters a sealed primary settling tank, which overflows into an aerated recirculation chamber (see Figure 8-7). Floating and settled solids, including grit and grease, are trapped and stored for 6 to 12 months and undergo anaerobic action. Excess sludge from the final clarifier is also stored here for anaerobic treatment, while the major portion of the clarifier sludge is returned to the recirculation/aeration basin. After the raw overflow mixes with the aeration tank contents, a set amount is pumped to the top of the bio-oxidation tower, which has 35 ft^2 (3.2 m^2) of surface area; another portion of the pumped flow is returned to the recirculation/aeration basin through a jet ejector, to mix and aerate the water/sludge mixture. The clarifiers are designed for a maximum overflow rate of 250 gpd/ft^2 (10 $m^3/m^2 \cdot d$). The wetting rate on the filters is maintained between 0.8 and 1.5 gpm/ft^2 (47 and 88 $m^3/m^2 \cdot d$).

It should be noted that the National Sanitation Foundation standards were used for testing this unit and the data are representative of different specified flow regimes. Because of better than normal operation, the data represent a measure of performance capability under the conditions of testing.

8.7.3 Nitrification in Extended Aeration Plant

A study was conducted by CAN-TEX on an extended aeration package plant at Weatherford, Texas, to determine the characteristics needed to obtain nitrification (13). Because efforts with single stage treatment were not successful at lower temperatures, the plant was split into two separate aerator-clarifier subunits. The first-stage unit was operated from February 1973 through June 1973; the second stage from September 1973 through March 1974, obtained only limited data. During the first period, the water temperature varied from about 18° to 28° C; in the second period, it varied from about 28° to 80° C. During the first period the DO in the aeration unit dropped below 2 mg/l several times, greatly reducing NH_3 removal. Nitrification recovered in several days when the DO returned to over 2 mg/l. The O_2 requirement to produce nitrification in the first-stage period was about 170 percent of BOD_5; in the second stage, it was reduced to 150 percent of the BOD_5. In the second stage, it was found that the DO could fall to 1 mg/l without lowering the removal in the first stage; however, more than 2 mg/l were required in the second stage.

Design and operation data are shown in Table 8-5. A plan and elevation of a CAN-TEX packaged two-stage nitrification activated sludge plant are shown in Figure 8-8.

TABLE 8-3

PERFORMANCE EVALUATION OF AQUATAIR MODEL P-3

	Min.	Max.	Avg.
Flow, gpd	2,800	3,300	3,100
DO, mg/l	2.9	6.5	4.6
Temperature, °C	14	24	20
pH	6.9	7.4	7.2
SVI	119	300	181
MLVSS, mg/l	1,000	2,250	1,708

	Influent	Effluent
BOD_5, mg/l	175 - 702	5 - 16
SS, mg/l	192 - 692	11 - 58
VSS, mg/l	166 - 590	9 - 36
COD, mg/l	402 - 1,784	16 - 112
Alkalinity as $CaCO_3$, mg/l	191 - 236	66 - 102
NH_3-N, mg/l	18.9 - 28.1	2.1 - 10.3
NO_3-N, mg/l	0.1 - 1.0	11 - 19.7
Phosphate, mg/l	21.4 - 31.1	16.1 - 28.8

TABLE 8-4

CHARACTERISTICS OF AQUATAIR PACKAGE SYSTEMS

	Design Capacity, gpd				
Item	10,000	20,000	30,000	40,000	50,000
Component Volume, gal					
Sludge Holding Tank	2,250	4,500	6,750	9,000	11,250
Recirculation Tank	3,750	7,500	11,250	15,000	18,750
Clarifier	1,667	3,166	5,000	6,670	8,333
Cl_2 Contact Tank	217	396	625	834	1,042
Bio-Oxidation Tower, ft^3	240	448	640	896	1,152
Weight, lb	11,300	18,050	24,800	31,400	35,000

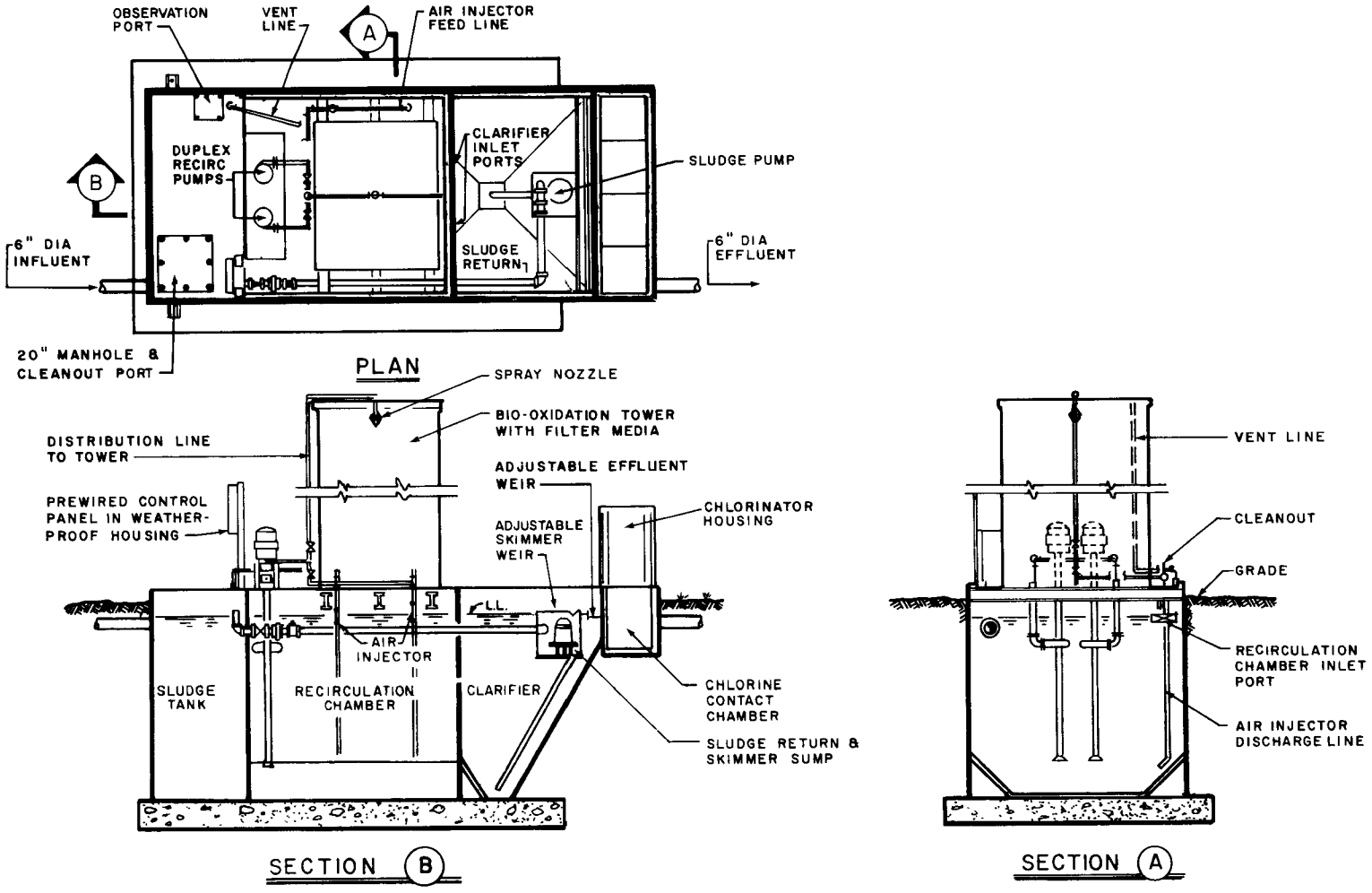

FIGURE 8-7

EXTENDED FILTRATION PACKAGE PLANT

TABLE 8-5

PACKAGE 2-STAGE NITRIFICATION ACTIVATED SLUDGE PLANT

Design Criteria

	Stage 1	Stage 2
Average 24-hour flow, mgd	15,000	15,000
Aeration retention time, hr	10	12
Clarifier overflow rate, gpd/ft^2	420	
SRT, day		12

Operating Data

	Raw Wastewater[1]	Aerator #1 Effluent	Clarifier #1 Effluent	Aerator #2 Effluent	Clarifier #2 Effluent
BOD_5, mg/l	229		36		17
SS, mg/l	240		47		17
MLSS, lb		1900		2900	
NH_3-N, mg/l	28		11		
NO_2-NO_3, mg/l	0		15		
Total Kjeldahl N, mg/l	26		11		0
DO, mg/l		4.2		5.1	
Temperature, °C			16		16

[1]The raw wastewater is not pretreated before entering the first aeration compartment.

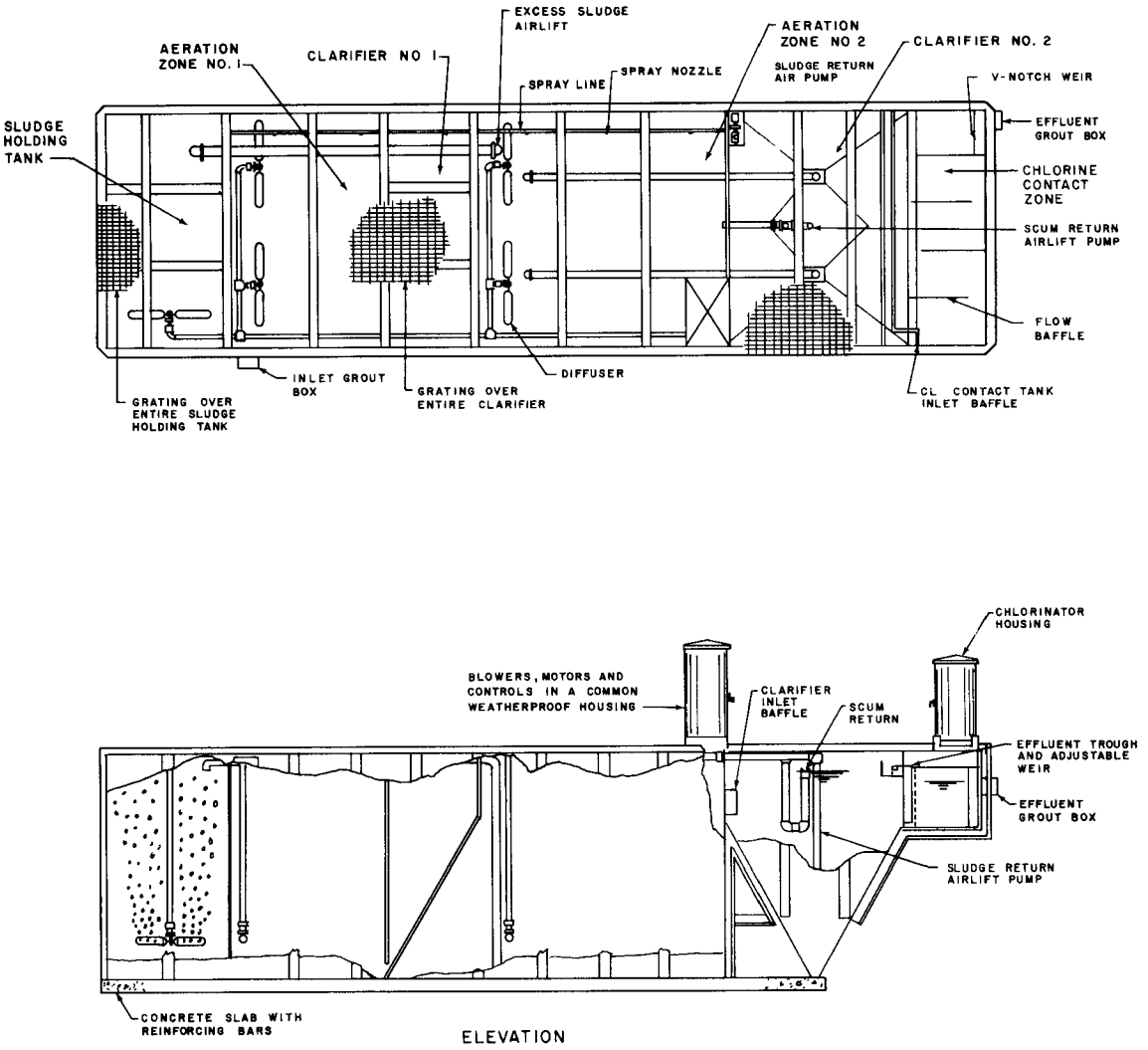

NOTES:

- PRETREATMENT CONSISTED OF SCREENING AND COMMINUTION.
- POST TREATMENT CONSISTS OF GRANULAR FILTRATION AND CHLORINATION.

FIGURE 8-8

CAN-TEX PACKAGE 2-STAGE (NITRIFICATION) ACTIVATED SLUDGE PLANT

8.8 References

1. Snoeyink, V.L., and Mahoney, J.A., *Summary of Commercially Available Wastewater Treatment Plants.* University of Illinois, Technical Report No. AFWL-TR-72-45, NTIS distribution No. AD-747-032, Urbana, Illinois (July 1972).

2. *Package Sewage Treatment Plants Criteria Development, Part I: Extended Aeration.* National Sanitation Foundation, FWPCA Grant Project Report No. WPD-74 (September 1966).

3. *Package Sewage Treatment Plants Criteria Development, Part II: Contact Stabilization.* National Sanitation Foundation, FWPCA Grant Project Report No. WPD-74 (June 1968).

4. Ludzack, F.J., *Biological Treatment Technology.* EPA-430/1/73-017, NTIS PB 228 148 (December 1973).

5. *Municipal Wastewater Treatment Plant Sludge and Process Sidestreams,* U.S. EPA, Office of Water Programs (1975).

6. Dague, R.R., Elbert, G.F., and Rockwell, M.D., "Contact Stabilization in Small Package Plants." *Journal Water Pollution Control Federation,* No. 44 (1972).

7. *Bio-Surf Process Package Plants for Secondary Wastewater Treatment.* Autrol Corporation Bio-Systems Division, Milwaukee (1974).

8. Tchobanoglous, G., "Wastewater Treatment for Small Communities." *Public Works* (July 1974).

9. Kreissl, J.F., and Cohen, J.M., "Treatment Capability of a Physical-Chemical Package Plant." *Water Research*, No. 7 (1973).

10. Seymour, G.G., "Operation and Performance of Package Treatment Plants." *Journal Water Pollution Control Federation,* No. 44 (1972).

11. Private communications, Met Pro Systems, Division 5th and Mitchel Avenue, 19446 (Lansdale, Pennsylvania: June 1974).

12. Trickling Filter/Activated Sludge Package Plant brochures, Aquatair (1975).

13. Study bulletins, CAN-TEX Research Division, Weatherford, Texas (1975).

CHAPTER 9

FIXED FILM SYSTEMS

Biological processes used for treatment of wastewater can be classified as suspended growth systems or fixed film systems. Suspended growth systems are discussed in Chapter 7. Fixed film systems provide surface area for the growth of a zoogleal slime. This slime or film contains the major portion of microorganisms that provide treatment. The fixed film systems can be further divided into units with stationary media (trickling filters) and units with moving media (rotating biological contactors).

9.1 Trickling Filters

9.1.1 General Description

A trickling filter contains a stationary medium providing surface area and void space. The zoogleal film develops on the surfaces and the void space allows air and wastewater to pass through the medium and come in contact with the microorganisms in the film. The organisms utilize the oxygen and material in the wastewater for their metabolism.

Many variations of trickling filter systems have been developed and used successfully. The EPA Municipal Waste Facilities Inventory of August 1974 indicates that there are approximately 2,700 trickling filter plants with design flows of less than 1 mgd, serving about 9,400,000 people in the United States. In the past, the trickling filter has been considered ideal for plants serving populations of 2,500 to 10,000.

Trickling filters historically have been popular for use in small plants, because of their ability to recover from shock loads and to perform well with a minimum of skilled technical supervision, and because of their economy in capital and operating costs.

9.1.2 Process Description

The trickling filter process depends on biological activity to oxidize the complex organic matter in wastewater. For operating efficiency, the proper ecological environment must be maintained: a continuous supply of food, water to keep the organisms in the zoogleal slime moist, and oxygen to keep conditions aerobic. A distribution system is provided to insure uniform application of wastewater on the medium, along with an underdrain system to collect the wastewater that has passed through the medium and to provide spaces for proper ventilation.

If a trickling filter is operating correctly, the medium becomes coated with a zoogleal film, which is a viscous, jellylike substance containing bacteria and other biota. The zooglea produce exoenzymes, which catalyze chemical reactions between the suspended, colloidal, and dissolved organic solids adsorbed onto, or slowly moving over, the film. Activity on the surface of the film is normally aerobic, provided there is adequate ventilation. Some anaerobic decomposition near the medium surface may occur, because the diffusion of oxygen through

the film is largely molecular and, thus, quite slow. Depending on factors such as pollutant loading, type of organic matter, type of medium, temperature, presence of essential nutrients, and hydraulic loading, the film builds up until excess solids separate from the medium ("slough off") and are carried in the wastewater to a clarifier, in which settleable solids are removed for further treatment and disposal.

9.1.3 Classifications of Trickling Filters

Developments in the design and operation of trickling filters have resulted in four major classifications: low-rate, intermediate-rate, high-rate, and super-rate filtration, which are differentiated primarily by their hydraulic and organic loads. Recirculation and medium configuration also play a part in filter classification. Low-rate filters do not include recirculation; super-rate filters, in most cases, only recirculate to maintain a minimum wetting rate. Table 9-1 shows the four common classifications, with ranges of hydraulic and organic loading.

TABLE 9-1

TRICKLING FILTER CLASSIFICATIONS

Parameter	Low-Rate Filter	Intermediate Filter	High-Rate Filter	Super-Rate Filter
Hydraulic Loading, million gallons per acre per day (mgad)[1]	1-4	4-10	10-30	30-50
Organic Loading,[2] lb (BOD)/day/1,000 ft^3	5-20	15-30	30-60	50-100

[1]Includes recirculation (1 mgad = 0.935 $m^3/m^2 \cdot d$)
[2]Does not include organic load resulting from recirculation (1 lb/d/1,000 ft^3 = 0.016 $kg/m^3 \cdot d$)

The low-rate trickling filter is a very dependable unit, providing consistent effluent quality over a wide range of organic loading. This system, with associated primary and final settling tanks, will normally provide 85 percent BOD removal. The operation is very simple, because dosing is intermittent (at not more than 5-minute intervals) with no recirculation. The depth is normally between 6 and 10 ft (1.8 to 3.0 m), which, along with a low loading rate, may allow the unit to provide a high degree of nitrification. Two major problems with low-rate filters are odor and filter flies (*Psychoda*).

The intermediate-rate filter is similar in design to the high-rate units and is operated with recirculation. The major problem with the intermediate-rate filter is that hydraulic loadings within this range apparently lead to a stimulation of organic growth, which clogs filters. This clogging has been solved in some instances by using a large medium: 3 to 4 in. (75 to 100 mm) in size; however, some filters have operated well with smaller rock.

High-rate trickling filters are normally 3 to 6 ft (0.9 to 1.8 m) deep and require some operational skill to control high loadings and recirculation (which could be one to four times the influent flow). Because of high loadings and the relatively shallow depth, sloughing is normally continuous, and filter fly larvae are washed away, eliminating problems with flies and clogging (ponding). High loadings on a high-rate filter prevent the development of nitrifying bacteria, thus eliminating nitrification. The BOD removal efficiency of these units normally ranges between 65 to 75 percent, although they can stabilize large amounts of organic matter per unit volume (1).

Super-rate trickling filters have become available with the use of synthetic media having large void space and high surface area per unit volume (high specific surface). The super-rate filter, which consists of towers 10 to 40 ft (3 to 12 m) deep has accommodated hydraulic loadings of 2.4 gpm/ft^2 (140 m^3/m^2·d) and higher, although normal loadings are between 0.5 and 1.5 gpm/ft^2 (29 to 88 m^3/m^2·d). These towers are often referred to as bio-oxidation towers. Shallow trickling filters less than 10 ft (3 m) high, using manufactured media of the bulk packing type or other open media suitable for use in shallow units, could also be super rate.

Extended filtration is usually a subclassification of super-rate filtration. This process combines the super-rate trickling filter with controlled sludge recycle, similar to an activated sludge process. The sludge recycle is provided to maintain a high solids concentration in the trickling filter influent. These solids act in a way similar to the mixed liquor SS in an activated sludge process. This combination of suspended and fixed growths is intended to achieve a high degree of oxidation and stabilization of sludge solids. This process is also discussed in Section 8.8.2.

9.1.4 Application of Process at Small Plants

Trickling filters have been used to provide secondary treatment for wastewaters that are amenable to aerobic biological processes. These filters are capable of providing adequate treatment of domestic waste, if effluent quality of 20 to 30 mg/l of BOD is acceptable (2). The effluent quality from a trickling plant requires special consideration. If proper conditions exist, nitrification may occur in a trickling filter. These conditions, which include temperature, pH, presence of nitrification inhibitors, and solids retention time, will be discussed further in Chapter 13 and Section 9.1.8. The presence of ammonia, nitrogen, and nitrifying bacteria in the effluent and in the BOD bottle will cause a high BOD determination. If the possibility of nitrification exists, the samples should be nitrifier-inhibited to obtain a carbonaceous BOD_5.

Although a single-step trickling filter can achieve secondary treatment if designed and operated properly, the use of one step is not recommended for small plants. A single filter in a small plant would not meet reliability Class I or Class II conditions set forth in the U.S. EPA technical bulletin, *Design Criteria for Mechanical, Electric, and Fluid System and Component Reliability* (3). Trickling filters in parallel would increase reliability, but such units would have to be designed conservatively, to provide reliability over the entire range of loadings with a minimum of operation. New designs of small plants can provide reliability and flexibility by using trickling filters as roughing filters or in multiple-step systems.

Roughing filters are normally high-rate or super-rate units, designed to remove from 40 to 65 percent of the BOD_5. They are commonly used if only partial treatment is desired, to reduce the loadings on subsequent biological processes.

Using roughing filters provides two benefits: 1) as the required BOD removal decreases, the required loading rates increase rapidly, which reduces the volume of medium required and also the cost per pound of BOD removed; 2) the units may be upset by severe shock loading or toxic components in the waste and still regain original capacity rapidly. The units, therefore, may help to protect any subsequent biological treatment.

Some of the reasons for multiple-step systems include 1) better stage construction over a period of years, 2) protecting and improving following processes (roughing treatment), 3) reducing dissolved solids and BOD, and 4) minimizing costs of processes designed for nitrification. Multiple trickling filters can obtain better quality and more consistent effluent with less medium than required for a single filter plant (4).

Several possible process combinations are illustrated in Figure 9-1. Within these basic combinations the types and numbers of units can vary. Figure 9-1 has been included as a guide to selecting a process. Final selection of process combinations and types of units will depend on the required treatment, local economics, and specific loading conditions of each situation.

Selecting the classification for a trickling filter in these combinations will depend heavily on the capital and operating costs, and on the type and degree of treatment required. Factors important in this selection will be discussed in the following sections. In general, as loading rates are decreased, the volume of medium required increases and the amount of recirculation and the flexibility decrease.

Design of other components, such as aeration tanks, sedimentation tanks, fine screening devices, and effluent polishing methods, are discussed in other chapters. The use of fine screening in place of primary settling (as indicated in Figure 9-1) is discussed in sections 9.1.5 and 9.1.7. Recirculation arrangements are discussed in section 9.1.5.

Flexibility can also be provided to allow operation over a wide range of conditions. The recirculation system can be designed to provide a minimum wetting rate at low flows, operation of filters in series or parallel, and internal recirculation during no-flow periods.

Combination A in Figure 9-1 is a simple multiple-step system, which is excellent for use in small plants. The system can be automated to function with a minimum of operation manpower time, using simple equipment that requires little maintenance. Combination B can provide a higher degree of treatment than A, including nitrification, increased BOD_5 and SS removal, and possibly denitrification, depending on the method of effluent polishing.

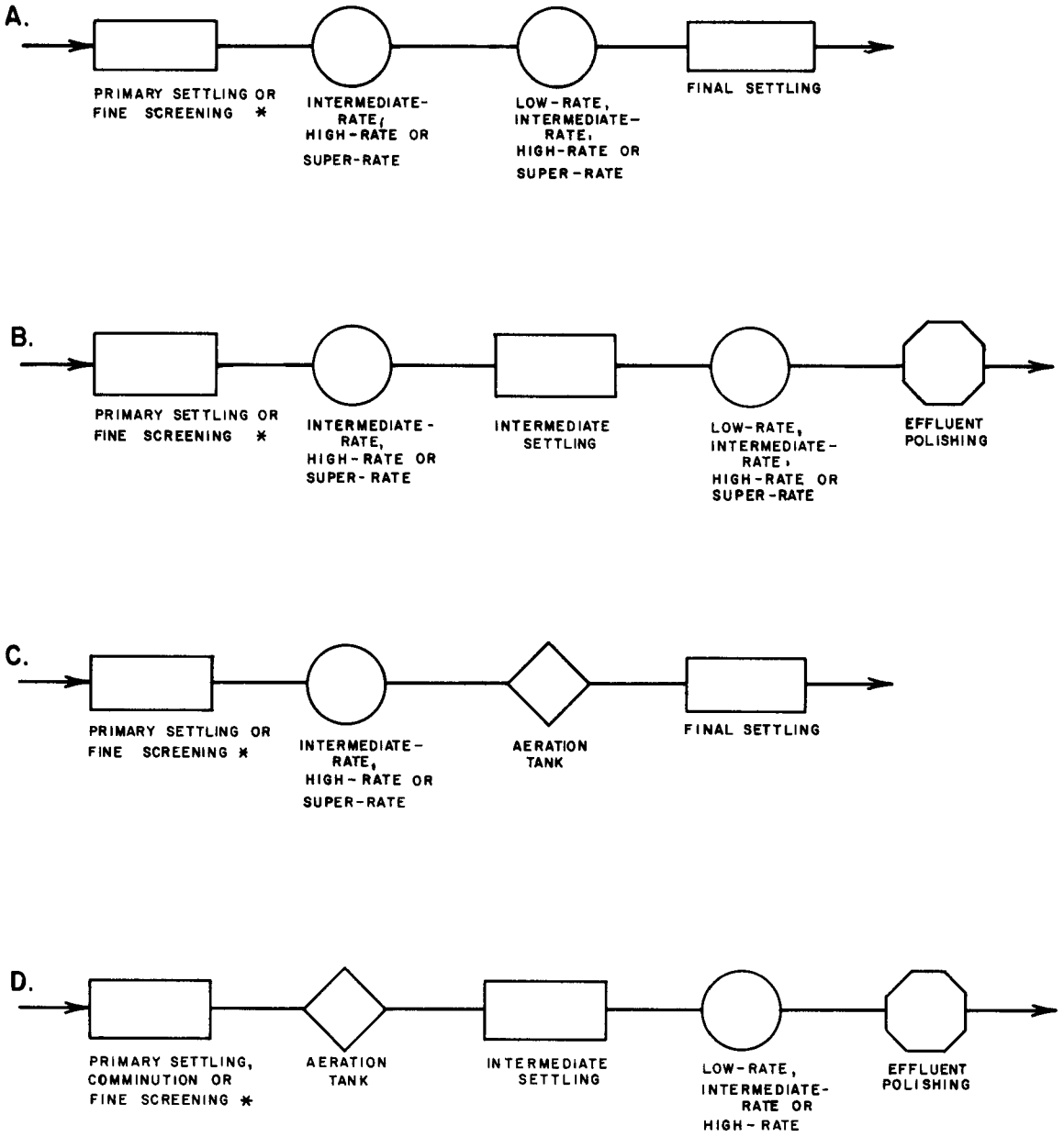

NOTE:
LISTS BELOW EACH UNIT INDICATE TYPES OF UNITS WHICH CAN BE USED. NOT INCLUDED BUT NECESSARY TO COMPLETE PROCESSES: COARSE SCREENING, GRIT REMOVAL AND DISINFECTION.

* FINE SCREENING MAY REPLACE PRIMARY SETTLING BEFORE TRICKLING FILTER DEPENDING ON WASTE-WATER AND MEDIA USED (SEE TEXT)

FIGURE 9-1

MULTIPLE-STEP SYSTEMS USING TRICKLING FILTERS

Combination C, using a trickling filter as a roughing filter, can be employed if shock loads of high strength waste or toxic materials are likely to occur. This system would require more operation and maintenance than Combination A, to provide reliable consistent treatment over the loading range. Nitrification also can be provided with Combination C, by sizing the trickling filter as a first step unit to remove BOD_5 to about 50 mg/l, and by designing the activated sludge process to provide the nitrification as well as BOD_5 and SS polishing.

Combination D is similar to combination B but adds the control flexibility of an activated sludge process. This process allows control of the first step, which could improve operating reliability of the second step, but requires more operation and maintenance.

Combinations B and D provide a nitrifying filter, followed by effluent polishing. Because sludge production from a nitrifying filter is small, the need for secondary clarification is marginal. Some type of effluent polishing, however, should be provided to catch any solids that may be produced.

9.1.5 Basic Design Concepts

Although the design of a trickling filter appears simple, there are a number of variables that affect performance. Some of these variables have been studied, and definite patterns have been established. However, conclusions are often difficult, because of the number of parameters involved, the range of variation of each parameter, and the number of combinations used. The major parameters affecting performance include the following:

1. Wastewater characteristics
2. Media type
3. Pretreatment
4. Hydraulic and organic loading
5. Recirculation
6. Depth of filter bed
7. Ventilation
8. Temperature

In an operating filter, these factors interact. These interactions and the variables within each factor are discussed below.

9.1.5.1 Wastewater Characteristics

Treatability of a waste is dependent on dissolved BOD, presence of essential nutrients, pH, and toxicity. During the trickling filter process, the BOD removal from a domestic wastewater that is low in dissolved BOD will exceed the removal from an industrial wastewater with a high percentage of dissolved BOD.

Wastewater treatment in trickling filters, as in any biological treatment process, requires nutrients and trace elements in the wastewater for proper operation. (Domestic wastewater normally will contain a sufficient amount of these nutrients and trace elements.) If a deficiency occurs, the growth of organisms stabilizing the organic matter can be reduced, allowing filamentous forms to develop. Fixed growth reactors, such as trickling filters (or rotating disk units), will usually have less trouble from filamentous biota than will activated sludge types of treatment. Caution must be exercised in using trickling filters, because, in some cases, additional growth can cause clogging of the filter.

If the possibility of a shock load of toxic waste exists, a trickling filter can be used to protect subsequent processes. A surge of shock load will upset a trickling filter, but because of the basic process and operating characteristics, recovery is much more rapid (without requiring changes in operation) than it is in other systems.

9.1.5.2 Media Types

Materials used as trickling filter media include crushed traprock, granite, limestone, hard coal, coke, cinders, blast-furnace slag, wood (resistant to rotting), ceramic material, and plastics. Redwood (Figure 9-2a) is available in racks approximately 4 ft (1.2 m) by 3 ft (0.9 m), fabricated of lath spaced 0.7 in (17.8 mm) apart on a horizontal plane. The racks are stacked vertically, 2 in. (5 cm) apart. Plastic media are available from several manufacturers in two major types: bulk-packed (Figure 9-2c), consisting of small plastic shapes similar to short pieces of tubing with internal fins, and modular (Figure 9-2b), consisting of corrugated plastic sheets welded together to form units approximately 2 ft (0.6 m) by 2 ft (0.6 m) by 4 ft (1.2 m). Some comparative physical properties of trickling filter media are included in Table 9-2.

Medium selection depends on a number of interrelated considerations described below.

1. *Specific Surface Area.* This is the amount of medium surface per unit volume available for biological growth. Greater surface area permits a larger mass of biological slime within the filter and a higher organic loading rate per unit volume.
2. *Void Space.* This is air space within the medium through which wastewater and air pass, thereby coming in contact with the fixed slime growths. For rock or slag medium, a decrease in size will tend to increase specific surface area and decrease void space. The higher the organic loading rate, the more air space per unit volume is required.
3. *Unit Weight.* Media with high unit weight, requiring heavier bases and walls, may limit the configuration of a filter, affecting installation cost.
4. *Media Configuration.* Randomly packed media such as granite, blast furnace slag, and bulk-packing plastic are able to disperse the hydraulic loading rapidly, before great penetration occurs. Rapid dispersion allows this type of media to be used at low hydraulic loadings and shallow depths. Modular-type plastic media do not provide the same dispersion; therefore, the required depth is greater, permitting greater organic loading rates. The wooden-rack media are designed to provide

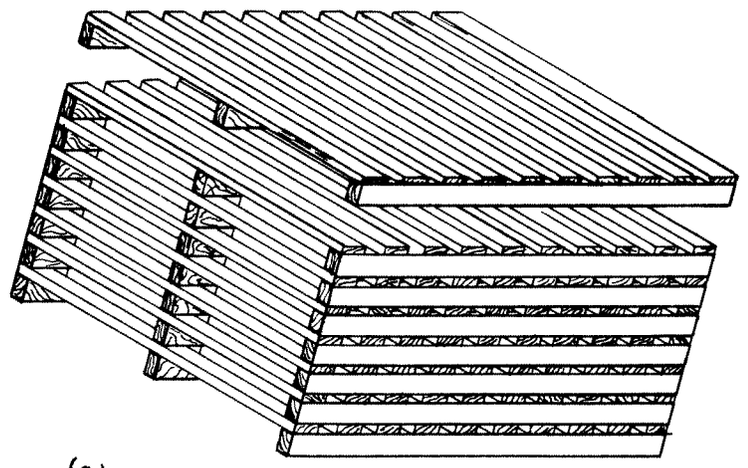

(a) REDWOOD MEDIA

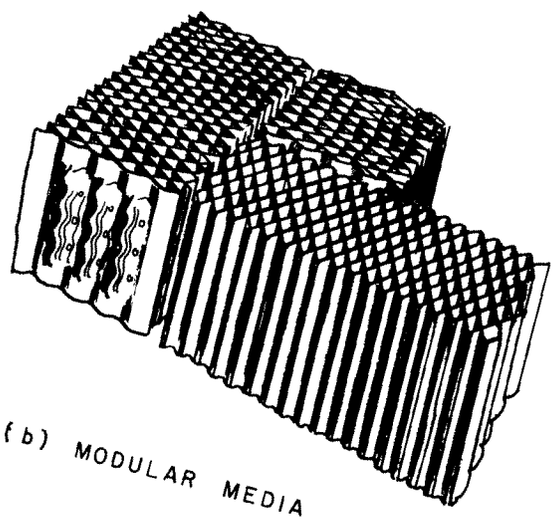

(b) MODULAR MEDIA

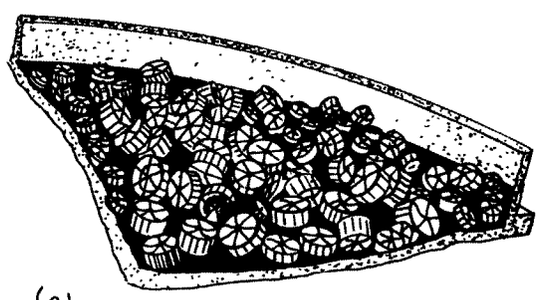

(c) BULK PACKING MEDIA

FIGURE 9-2
TRICKLING FILTER MEDIA

TABLE 9-2

COMPARATIVE PHYSICAL PROPERTIES OF TRICKLING FILTER MEDIA (5)

Medium	Nominal Size in.	Unit Weight lb/ft^3	Specific Surface Area ft^2/ft^3	Void Space percentage
Plastic (Bulk Packing)	–	4	35 to 60	93 to 96
Plastic (Modular)	20 by 48	2 to 6	25 to 30	94 to 97
Del-Pak Redwood	48 by 35	10.3	14	–
Granite	1 to 3	90	19	46
Granite	4	67	13	60
Blast Furnace Slag	2 to 3	68	20	49

dispersion similar to that obtained in randomly placed bulk-packing materials and can, therefore, be used in shallow filters.

Corrugations, fins, and other irregularities, which are provided in manufactured media and present in natural media (such as rock, slag, etc.) are valuable in improving oxygen transfer to the biomass (i.e., they cause turbulence in the wastewater passing through the media in thin layers).

5. *Media Material and Size.* The most common materials used for randomly packed media are crushed slag, stone, gravel, and uncrushable gravel. These materials should be sound, durable, nearly equidimensional, and resistant to freezing and thawing, as determined by the sodium soundness test. Normal size range for these materials is between 1 and 3.5 in. (25 to 90 mm). Uniformity is important, to insure adequate pore space. Gradation is normally restricted to 1 in. (25 mm) or 1.5 in (40 mm) between upper and lower sizes; e.g., 2.5 to 3.5 in. (65 to 90 mm) or 1.5 to 3 in. (40 to 75 mm). For more details on randomly packed media, see references (6) and (7).

   Plastic trickling filter media are normally constructed of polyvinyl chloride (PVC) for modular media, or polyethylene (PE) for bulk-packing media. PVC and PE are plastics that are highly resistant to chemical or biological degradation. Although there are some chemicals that will affect the physical properties of these plastics, there is little chance that any of these materials would be present in municipal wastewater in sufficient concentrations to have a noticeable effect on them at temperatures below 140° F (60° C). PVC is used for modular-type media, because of its rigidity and because it can be made in thin sheets or foils. PE can be formed in the shapes used in bulk-packing media but lacks the rigidity required

for modular media. Other factors influential in selecting these plastics are low cost and reduced flammability. Care must be exercised in their design and specifications, to prevent damage from exposure to the sun.

6. *Availability.* The relative availability of media may have a major effect on the filter design. In many areas of the country, sound durable rock is unavailable, and a compromise may be required.

7. *Cost.* The cost of trickling filters primarily depends on the medium used. Care must be taken to compare medium cost with the work the medium will accomplish and with the effect it will have on both the construction required and the operation of the unit.

9.1.5.3 Pretreatment

Pretreatment may refer to the use of trickling filters for treatment of wastewater before discharge to a municipal system, or it may refer to the preceding treatment process.

Use of trickling filters prior to discharge of wastewater into a municipal system can be implemented by industries to meet sewer ordinance rquirements, reduce sewer charges based on strength, and treat difficult wastes. Design criteria for using trickling filters for pretreatment of industrial wastes are, however, beyond the scope of this manual.

Pretreatment, provided ahead of trickling filters in a small plant, might include the following:

1. Chemical treatment, to remove or control heavy metals or toxic substances or phosphorus
2. Neutralization, to keep the pH in the proper range for biological activity
3. Pretreatment with chlorine or hydrogen peroxide, to control septicity and odor
4. Preaeration, to control odor and septicity; increase BOD_5 and SS removal and efficiency in primary sedimentation; and aid in grease removal
5. Equalization, to reduce variations in flow or characteristics of wastewater
6. Bar racks, grit removal, comminution, fine screening, or primary sedimentation, to reduce organic loadings and solids, which may clog the trickling filter nozzle, the media, or the underdrains

The effects of pretreatment should be apparent and require no further discussion. When and how these steps are used are covered in more detail in other chapters of this manual.

Primary sedimentation deserves further consideration. In the past, it was necessary to precede trickling filters by primary sedimentation, because of clogging problems. However, studies have shown that degritted, comminuted wastewater can be applied directly to modular-type plastic medium filters, without primary clarification. Tests have shown that solids in trickling filter effluent settled better than those in comminuted wastewater (8) (9). Fine screening has been found suitable for replacing grit removal, comminution, and

primary settling, if waste characteristics permit. Fine screening is discussed further in Section 9.1.8.

9.1.5.4 Hydraulic and Organic Loading

Hydraulic loading is the total volume of wastewater, including recirculation, applied to a filter per day, per unit surface area. Ranges of hydraulic loading for the various filter classifications have been included in Table 9-1. In the past, both hydraulic and organic loading were related to the performance of trickling filters. Various design formulas related to the performance of filters have been developed and used with varying degrees of success. The effect of hydraulic loading on filter performance is closely related to dispersion of flow within the medium and to contact time, which are dependent on depth, specific surface, and configuration of the medium. Hydraulic loading variations, in combination with other factors, may have caused some of the variations in design formulas. In rock trickling filters, the limited range of sizes and configurations, the use of depths within a small range, and the relatively small variations in organic concentration for domestic waste, tend to keep variations low. With the development of new media and the use of greater depths, hydraulic loading becomes more important.

In bulk-type media, such as rock or loose plastic packing, the dispersion within the medium is good and will occur at shallow depths; therefore, low hydraulic loadings can be applied. Contact time within a filter with a bulk medium is high, because this dispersion causes complete wetting of the surface available and the medium configuration tends to slow passage through the filter. In modular media, because of the configuration, dispersion is poor, and flow through the medium is rapid. Because of poor dispersion, modular media require a higher hydraulic loading and greater depths to allow uniform wetting of the surface. Several manufacturers require a minimum of 0.5 gpm/ft^2 (29.3 m^3/m^2·d), with the normal range between 0.5 and 1.5 gpm/ft^2 (29 to 88 m^3/m^2·d). Flows as high as 6 to 8 gpm/ft^2 (352 to 469 m^3/m^2·d) have been used, but normally, rates above 3.5 gpm/ft^2 (205 m^3/m^2·d) are not recommended (10). The effects of hydraulic loading of modular-type media on BOD removal and pounds of BOD removed are shown in Figures 9-3 and 9-4 (11).

Depending on the type of distribution system and flow conditions, the application rate to the filter may be continuous, intermittent, or varying. A trickling filter requires flow to keep biological growth moist, but rest periods of short duration can help control filter flies. In high-rate and super-rate filters, flies are not a problem, because high flows provide continuous flushing of the zoogleal films, keeping them thin and highly active. Methods of applying hydraulic load will be discussed further in section 9.1.10.

Organic loading is the amount of soluble organic material to be treated by the filter per day, per cubic unit of filter. If flow is recycled, part of the organics not removed in the filter are placed back on the medium, adding to the organic load, to make up the applied organic loading. Some investigators have omitted recycled organics; others have included them in the organic loading rate.

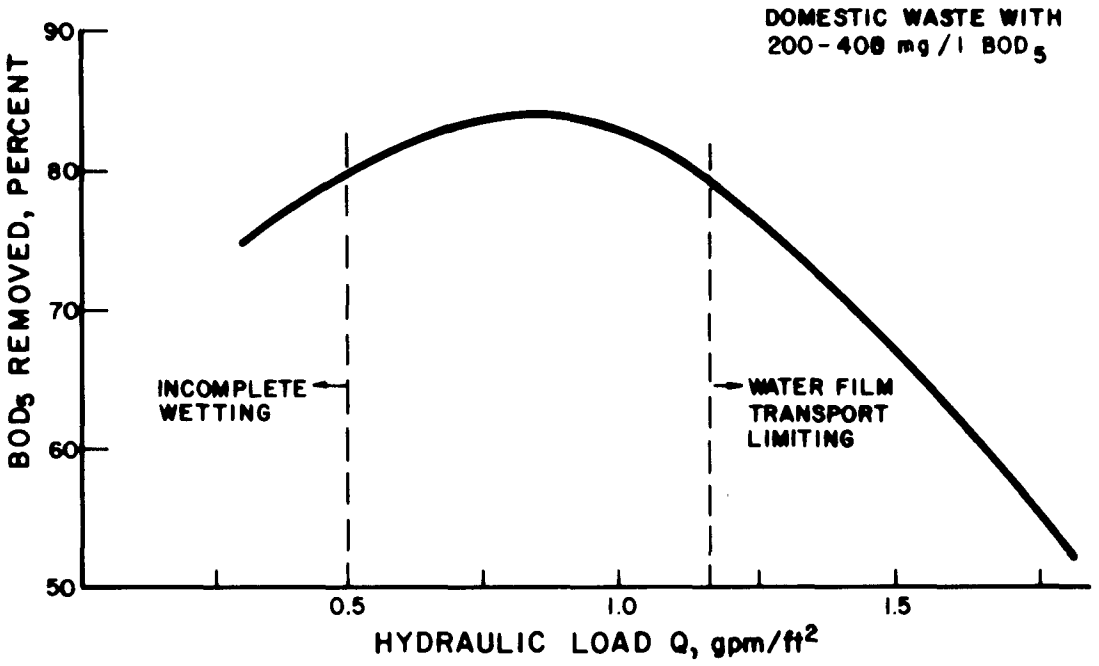

FIGURE 9-3

PERCENT BOD REMOVED vs HYDRAULIC LOAD (11)
MODULAR TYPE MEDIA

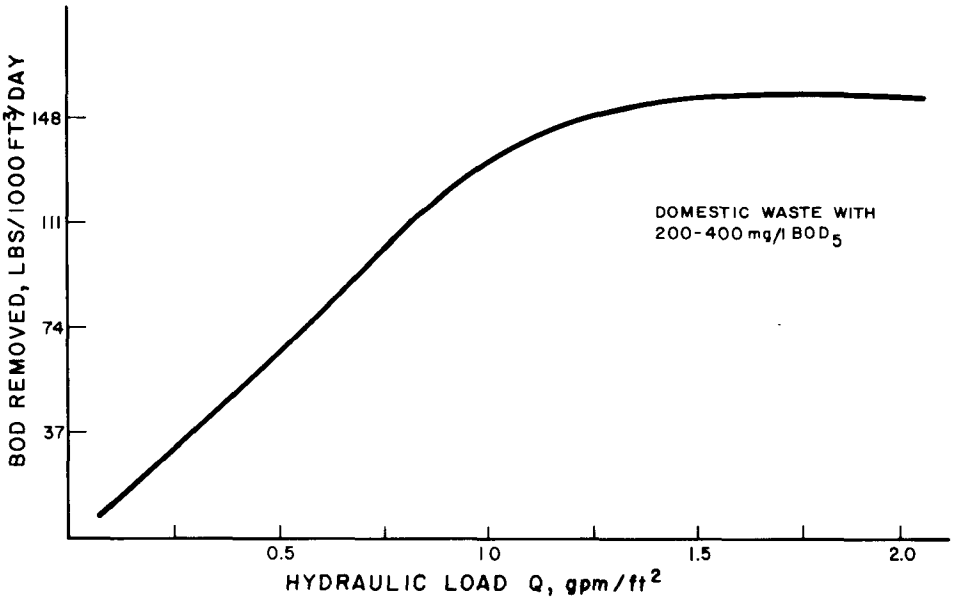

FIGURE 9-4

POUNDS BOD REMOVED vs HYDRAULIC LOAD (11)
MODULAR TYPE MEDIA

9.1.5.5 Recirculation

Recirculation returns a portion of the trickling filter effluent to the filters. This recirculation may include clarified liquid, settled sludge, or both. The amount of recycling is normally expressed as the recirculation ratio: the ratio of recirculated flow to incoming flow. The selection of what is recycled, amount of recycle, and arrangement of recycle flow will depend on economics and the designer's judgement as to which benefits are most desirable. To aid in discussing recirculation, possible flow diagrams for small trickling filter plants are shown in Figure 9-5. These diagrams and the benefits of recirculation for use in small plants are discussed below.

Originally, trickling filters were low-rate units which did not use recirculation. As the trickling filter process was developed, recirculation was found to increase the removal of BOD and was thus provided in the design of intermediate and high-rate units. If the hydraulic loading reached those of the super-rate units, it was found that a further increase in loading by recirculation was not beneficial. Recirculation is provided for many super-rate units but is used primarily for maintenance of a minimum wetting rate.

Recirculation has provided many benefits in the use and operation of trickling filters, depending on the class of filter and the conditions of installation. Some factors requiring consideration include the following:

1. *Dampening of variations in loading.* If recirculated flow passes through a settling tank, the variations of daily loadings can be somewhat dampened. The major problem with recycling through settling tanks is that the tanks must be designed and constructed to accommodate the increased flows. Consequently, the initial cost is increased.
2. *Maintaining minimum flow rates.* In many small plants, the flow rates approach zero; in some cases, incoming flow stops for short periods at night. Recirculation will allow the unit to continue operation without starting and stopping the rotary distributor (requiring a dosing system) and will provide continuous moisture to keep the zoogleal film active. In super-rate filters, recycling is used to maintain the minimum wetting rate required for uniform wetting of the medium surface.
3. *Reducing sludge handling equipment.* If sludge from a final sedimentation tank is recirculated to the primary tank, requirements for sludge handling are reduced.
4. *Dilution of wastewater characteristics.* Recycle of effluent tends to buffer pH and to dilute strong or toxic waste.
5. *Increasing contact of organics with active microbes.* Wastewater is continuously inoculated with active biological material. Increased contact time of organics with organisms will improve removal of dissolved and suspended solids by bioflocculation and will reduce sludge volume (by aerobic digestion within a tower trickling filter). Removal of soluble organics will also increase. Reaeration will occur in the filters, keeping organisms more active. These factors increase the amount of BOD removed per unit volume of medium, thus reducing the size of filter required.

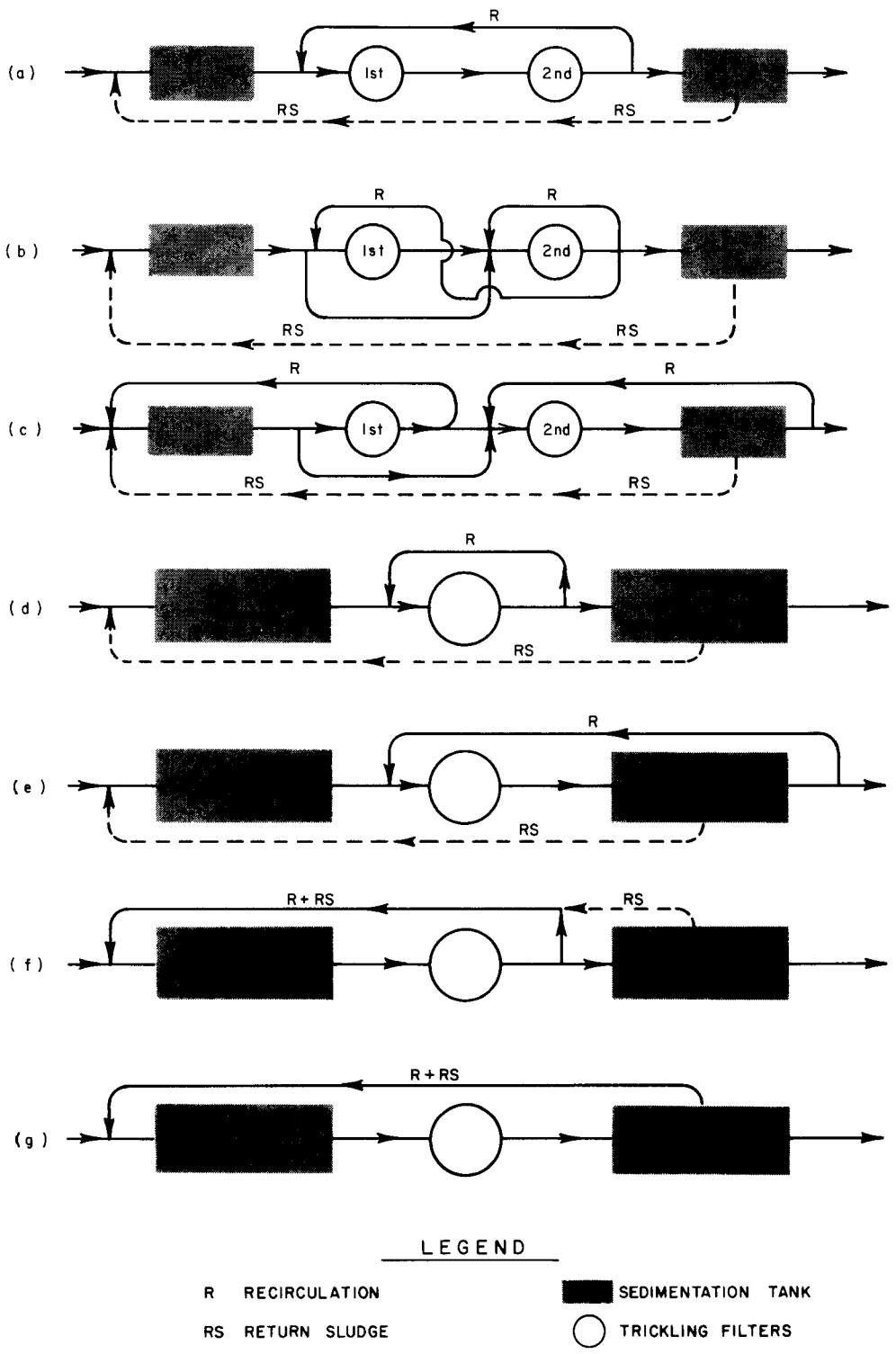

FIGURE 9-5

FLOW DIAGRAMS FOR SMALL TRICKLING FILTER PLANTS

6. *Maintaining biological film.* Sludge recycling may help sustain a viable bacterial colony on media under shock loads or periods of no organic flow. If sludge is recycled from a clarifier to its preceding filter in a multiple-step system, colonies can be kept separate.
7. *Reducing tendency to clog.* Recycling can increase the hydraulic loading and keep the flow continuous, resulting in a more uniform and continuous sloughing of solids.
8. *Minimizing fly problems.* Increased flow will wash fly eggs and larvae through the filter.
9. *Reducing odor.* Recirculation will provide reaeration, which will help keep the filter aerobic and raise the dissolved oxygen (DO) concentration in the filter influent.

Many recycle arrangements have been used in small trickling filter plants. In the design of a small plant, the flow diagram providing the simplest and most economical process possible should be used, if the required treatment can be obtained. Recirculation arrangements shown in Figure 9-5 can be used in the suggested systems in Figure 9-1.

Recirculation arrangements (a), (b), and (c) (Figure 9-5) could be used for System A (Figure 9-1). Arrangement (a) is the simplest, providing recycle back to the head of the first trickling filter, without involving a sedimentation tank. This arrangement provides minimal flexibility and may not be economical if the range of loadings is wide.

Arrangement (b) does not involve sedimentation tanks with the recycle flow and provides extreme operational flexibility over varying loading conditions. Pump, valves, and other control devices can be provided to operate the trickling filters in series or parallel and to recycle flow around each filter. Additional flexibility can also be provided to allow alternation of the filter positions when operating in series. This diagram shows how flexibility and reliability can be provided, depending on the economics of each condition. In any cost-effectiveness analyses, flexibility must be carefully evaluated and provision should be made for as much flexibility as possible.

Arrangement (c) is similar to (b) and provides the same flexibility. The recirculation passes through the sedimentation tank, requiring the tanks to be sized for process flow plus recycle. This arrangement would increase the cost of the tanks but may be justified if shock organic or toxic loadings may occur.

Diagrams (d), (e), (f), and (g) show flow arrangements that could be used in Systems B, C, and D (Figure 9-1). Arrangement (d) provides direct recirculation (similar to (a) and b)) and can be used for a unit in any position of Systems B, C, or D (Figure 9-1). Direct recycle would be simple to provide, and therefore, cost effective, unless dampening of loads is required. Culp (12) compared the performance of arrangements (d) and (e) and concluded that the effluent quality of (d) was at least comparable with that of (e). Culp also found that there was less tendency toward filter ponding with direct recirculation.

Arrangement (e) could be used in System B (Figure 9-1) for the first-step filter. Systems B, C, and D could use arrangement for first and/or second steps. Arrangement (g) could be used in System B for the first-step units, combining sludge return to the primary sedimentation tank with recycle.

The arrangements discussed are suggested for use in designing small plants. Many possible arrangements (not all included here) can be used to provide control, flexibility, and reliability. Final selection will depend on the considerations mentioned above.

The amount of recycled flow can be more important than the arrangement, and a number of pumping combinations have been used to provide the required amount. The recirculation ratio is generally kept between 0.5 and 4.0, although ratios of 10 and above have been used (2). Galler and Gotaas have determined that ratios greater than 4 are uneconomical and do not increase efficiency (13).

Depending on individual requirements, various pumping arrangements have been used to provide the amount of recirculation required. Pumping can be provided to recirculate:

1. At low flows
2. At a constant rate at all times
3. At a constant percentage of wastewater flow
4. At a rate inversely proportional to wastewater flow
5. At several constant rates

The control of pumping can be automatic (according to preset values) or manual (by the plant operator). Automation will depend on plant size, staffing, etc.

9.1.5.6 Filter Depth

The depth of trickling filter media is important in design, because of the relations of depth to contact time, flow distribution, ventilation, and loading (both hydraulic and organic). With some deep low-rate filters, a degree of nitrification has occurred as an added benefit to the treatment.

The relative importance of depth depends on the type of filter. If bulk-type media are used, depth of 6 to 10 ft (1.8 to 3.0 m) for low rate and 3 to 6 ft (0.9 to 1.8 m) for intermediate and high rate are adequate. The selection of depths within these ranges can be based on balancing with the area, to keep the volume constant.

If modular-type media are used, depth becomes a major design factor. Most plastic media manufacturers have maximum and minimum depth recommendations. A minimum of 10 ft (3.0 m) is required, to insure a reasonable detention time and allow for the dispersion of wastewater within the media. Depths approaching the upper limit of 40 ft (12.2 m) are usually controlled by the cost of pumping and wall construction.

9.1.5.7 Ventilation

As an aerobic biological process, a trickling filter system requires air to operate, making ventilation an important design consideration. Ventilation provides oxygen for the aerobic organisms and purges the system of waste gases.

Natural ventilation in a trickling filter is caused by the difference in temperature between the ambient air and the wastewater. Heat exchange between the wastewater and the air within the medium changes the air temperature, resulting in a density change which sets up a convection current within the filter. During warm weather, the air is cooled by the colder wastewater, raising the density and thereby causing a downward flow of air. During cold weather, when the wastewater is warmer than the air, air flow is upward.

In designing a unit, natural ventilation can be achieved by (14):

1. Designing underdrains and channels to flow no more than half full at maximum day flow
2. Providing ventilation manholes at both ends of the main collection channels
3. Providing an open area of slots in underdrain blocks not less than 15 percent of the filter area
4. Providing 1 ft^2 (0.1 m^2) or more of open ventilation, including manholes or vent stacks, for each 250 ft^2 (23 m^2) of filter area

Some filters that are extremely deep or heavily overloaded will require forced ventilation. In such cases, a system using reversible fans will provide ventilation, supplementing any available natural ventilation. The design of such a system should provide 1 cfm/ft^2 (0.3 $m^3/m^2 \cdot min$) of filter area (14).

If trickling filters are operated in extremely low air temperatures, the airflow may have to be controlled to prevent freezing of the unit. The airflow required by the filter could be reduced to about 0.1 cfm/ft^2 (0.03 $m^3/m^2 \cdot min$) of filter area. This condition is very important in modular-type, plastic medium towers, which are extremely open and allow high airflow conditions within the unit.

Manufacturers of modular-plastic media have different recommendations on the amount of ventilation area required. These recommendations include 5 to 10 percent of the tower surface area, 1 to 2 $ft^2/1{,}000\ ft^3$ (0.3 to 0.6 $m^2/100\ m^3$) or 1 ft^2 (0.1 m^2) for each 10 to 15 lin ft (3.1 to 4.6 m) of filter perimeter. These figures are useful as guides to the amount of ventilation required. The actual design should provide adequate ventilation area, which can be adjustable for use as required.

9.1.5.8 Temperature

Low temperatures will affect any biological wastewater treatment process. The effects may be physical (freezing), biochemical (slowing reactions), or biological (lowering biological activity). The trickling filter process may be subjected to all of these conditions. Reduced

wastewater temperature will slow down biological activity, reduce settleability because of a change in viscosity of the wastewater, and reduce the gas transfer efficiency. Low ambient air temperature will tend to lower wastewater temperature and can cause ice formation on the units.

A study of trickling filter plants in Michigan (15) compared the efficiencies of the units at mean air temperatures of 67° to 73° F (19 to 23° C) and 25° to 31° F (-3 to -1° C), for a period of 3 years. Some conclusions are:

1. There is a significant difference in efficiencies between summer and winter months.
2. Recirculation of wastewater has a marked cooling effect during winter operation, with a decrease in efficiency.
3. Lower air temperature has more effect on plants that recirculate than those that do not.
4. In plants that recirculate, the efficiency changed 21 percent between winter and summer operation.
5. Filter efficiency was affected by reduced natural ventilation in plants not recirculating, if the air and wastewater temperatures were the same.

A study of cold weather operation of modular-type plastic media in Canada (8) concluded that:

1. Although ambient temperatures varying from -12.1 to 86.9° F (-24.5 to 30.5° C) were encountered, a variation of only 52.7° F (11.5° C) was observed in the influent wastewater temperature.
2. Operation of a full-scale, modular-type trickling filter should not present any special problems over and above those normally encountered in any biological waste treatment process.
3. A modular-type plastic packed trickling filter can be shut down for several days during subzero weather; within 24 hours of startup, the reactivated biota should attain a level of efficiency greater than 90 percent of their original value.
4. Heat loss at the fixed film and liquid interface was negligible in once-through applications. Cooling did occur after discharge from the column of packing. Thus, if recycle is provided, drastic decreases in tower influent temperatures may result.

If units are designed for use in cold areas, a number of special considerations are required, particularly with regard to the drop in filter efficiency during the winter period. In some trickling filter systems, the change in efficiency may be conpensated for by the following:

1. Small filters may be enclosed in or placed next to a structure in which heat is available, to prevent problems during extremely cold periods.
2. Recirculation can be provided with controls that would allow reduction or shut-off during cold weather.
3. Continuous flow systems with fixed nozzles can be designed to reduce icing problems.

4. Clearance can be provided between the rotary distribution arms and filter walls and medium, to reduce the chance of stoppage caused by ice buildup.
5. Drains can be provided to allow draining of the distribution system, when it is shut down in cold weather.
6. Filters can be placed in areas protected from winds with high sidewalls providing wind protection.
7. If multiple units are used in parallel, control can be provided to shut down some units (which can be restarted quickly) during cold periods, providing greater flows for units that would continue to operate.
8. Covers can be provided to protect the filters from wind and to control ventilation.
9. Ventilation ports can be provided with controls to regulate air flow during cold periods.
10. Filters can be designed to compensate to some extent for the effect of temperature.

The effect of temperature on efficiency of a filter can be estimated by the following relation (5) (16):

$$E_T = E_{20}\theta^{(T-20)}$$

where

E_T = filter efficiency at temperature T
E_{20} = filter efficiency at 20° C
T = wastewater temperature, °C
θ = constant varying from 1.035 to 1.041

9.1.5.9 Miscellaneous Concepts

In addition to the factors affecting performance discussed previously, factors affecting overall design and process selection are listed as follows:

1. *Noise.* Trickling filters operate with little noise, because compressors or aerators are not used.
2. *Antifoam Requirements.* Antifoam spray systems normally are not required within the trickling filter process.
3. *Plant Odors.* Due to inadequate design and operation, aerosols and odors may be generated from a trickling filter. Anaerobic primary clarifier effluent, inadequate ventilation, drainage, or excessive organic loading can lead to anaerobic conditions and cause odor pollution. The odors or aerosols may become windborne from distributor arm discharge.

9.1.6 Design Formulas and Criteria

Although trickling filters are relatively simple to operate and maintain, sizing of the units (medium, volume, and depth) is often difficult. There have been many attempts to develop

methods for sizing these units, with varying degrees of success. The difficulties are the number of variables to consider, the amount of variation in each parameter, and the interaction of each. Analyses of operating data have been used to establish equations and curves that best fit the available data. Results of these analyses have led to the development of the following formulas or design methods:

1. Ten States Standards
2. National Research Council formula
3. Velz
4. Schulze
5. Echkenfelder
6. Galler-Gotaas

These formulas are presented and discussed in several other publications in detail (5) (17) (18) (19) (20) (21) (22) (23); therefore, a duplicate discussion will not be presented here.

Although these formulas represent attempts to include many of the variables that can affect trickling filter operations, the use of any one of these formulas does not universally reflect the actual performance of filters.

In using these formulas, the engineer should take care to use the one most suited to the specific design conditions. None of them is generally applicable to all conditions. Figure 9-6 is intended to provide a guide for selecting the proper formula. Some of the formulas have been developed for specific conditions (e.g., the Schulze formula for synthetic media without recirculation). Other formulas may be more generally applicable but may not have been developed sufficiently in some of the areas. For these formulas, only the most suitable uses are indicated on the chart.

Design results using different formulas for the same conditions are summarized in Table 9-3. The summary shows the wide variation in volume found, using these formulas for equal design conditions.

The examples used for the table were not for optimum designs. Using an iterative process, varying some design parameters, an optimum volume and configuration can be established. Within this iterative process, care must be taken to include economics in selecting the best design. It will be up to the designer to make the final decision on volume and configuration. Wherever possible, flexibility in parameters such as recirculation or ventilation should be incorporated in the design, to insure the capability of the unit to operate adequately under actual conditions.

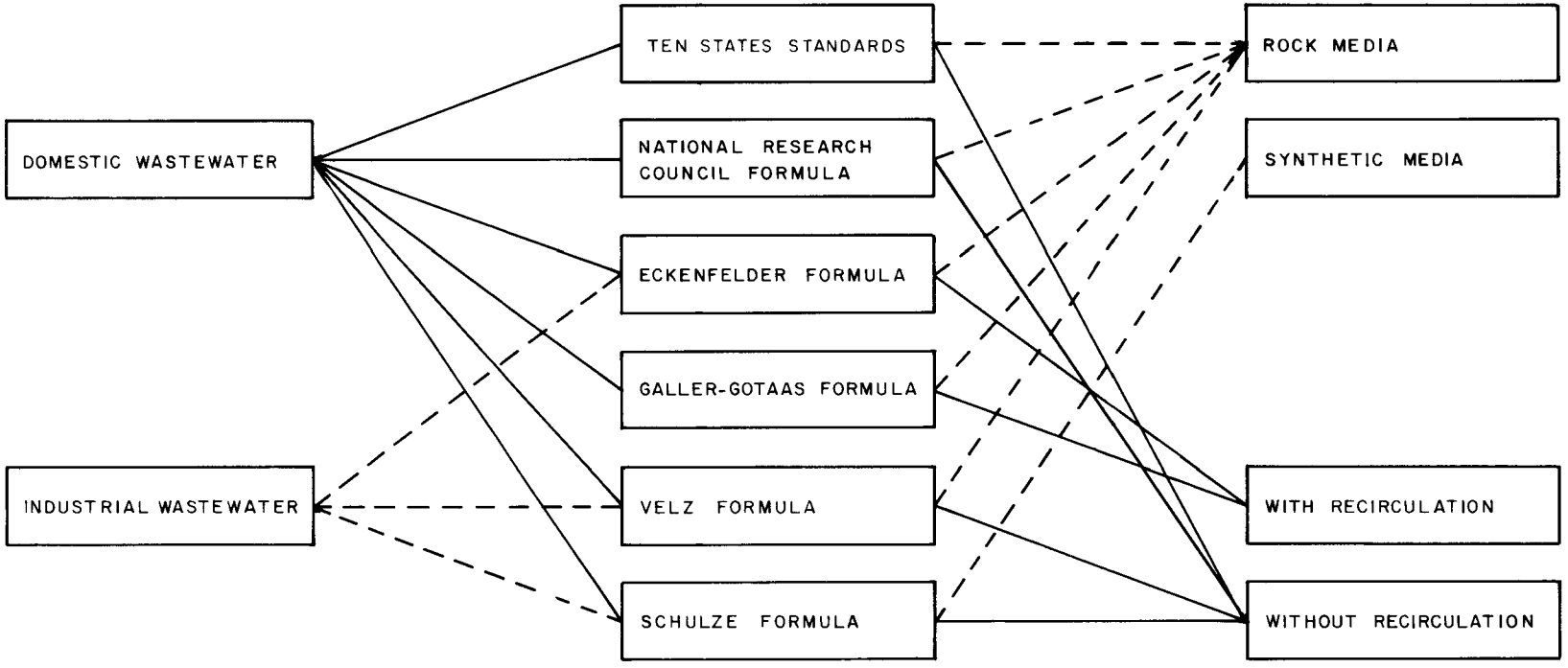

FIGURE 9-6

APPLICABILITY OF TRICKLING FILTER FORMULAS

TABLE 9-3

SUMMARY OF EXAMPLE DESIGNS

	Conventional Design	NRC One Step	NRC Two Step	Schulze (Plastic Media)	Eckenfelder One Step	Eckenfelder Two Step	Galler-Gotaas One Step	Galler-Gotaas Two Step
BOD Removed, Percent First Step	83	83	60	83	83	60	83	60
BOD Removed, Percent Second Step	–	–	57.5	–	–	57.5	–	57.5
BOD Removed, Percent Total	83	83	83	83	83	83	83	83
Recirculation Ratio, First Step	2.26	1.0	1.0	0.0 (Design) 2.0 (At Min.)	1.0	1.0	1.0	1.0
Recirculation Ratio, Second Step	–	–	1.0	–	–	1.0	–	1.0
Filter Depth, ft	5	–	–	18.5	6.0	6.0	6.0	6.0
Volume, ft^3 One Step	8,090	26,500	–	7,550	11,500	–	48,000	–
Volume, ft^3 First of Two Steps	–	–	2,510	–	–	1,080	–	3,168
Volume, ft^3 Second of Two Steps	–	–	5,100	–	–	5,500	–	5,000
Volume, ft^3 Total of Two Steps	8,090	26,500	7,610	7,550	11,500	6,580	48,000	8,168

Notes:
1. All filters of rock medium, except Schulze.
2. Wastewater flow, 0.5 mgd.
3. Primary effluent BOD, 140 mg/1.
4. Final effluent BOD, 24 mg/1.

9.1.7 Example Designs

9.1.7.1 Site and Wastewater Characteristics

Principally domestic wastewater.
Land available for purchase as required.
Site is flat, located next to a large river.

Influent BOD_5, mg/l	200
Influent SS, mg/l	250
Influent NH_3-N, mg/l	20
Flow, gal/cap/day	100
Peak to average ratio	4:1
Average to minimum ratio	4:1
Population	2,000
Minimum wastewater temperature,	45° F (7° C)
Minimum air temperature,	14° F (-10°C)
pH range	7.2 to 7.8
Hexane Solubles, mg/l	75
Effluent BOD, mg/l	<30
Effluent SS, mg/l	<30

9.1.7.2 Design of Rock Trickling Filter Plant

Additional Design Conditions

1. Plant reliability, Class II [from EPA reliability guidelines (3)]
2. Pretreatment: coarse screening, grit removal, and primary sedimentation (30 percent BOD_5 removal)

A minimum of two trickling filters must be provided, designed so that, with one unit out of operation, the average daily flow can be handled by the remaining unit.

Sizing of Filter

Use 1:1 recirculation ratio to allow flexibility and control of filter operation. For a rock medium filter, the NRC formula can be used. The basic NRC formula for the design of single step trickling filters is:

$$E = \frac{1}{1 + K\left[\frac{W}{VF}\right]^{0.5}}$$

where

E	=	fraction of BOD_5 removed in a single filter
W	=	organic load influent to the filter (lb/day BOD_5) = (8.34) QL_i
V	=	filter volume in 1,000 ft^3 or acre-ft
K	=	constant 0.0561 for V in 1,000 ft^3 and 0.0085 for V in acre-ft
F	=	recirculation factor = $\frac{1 + r}{[1 + (1 - P)\, r]^2}$
P	=	fraction of BOD_5 available ($0.85 < P < 0.95$); generally, use P = 0.90
Q	=	flow rate (mgd)
L_i	=	filter influent BOD_5 (mg/1)
r	=	recirculation ratio, or ratio of recycled flow (R), to total plant influent flow (Q)

Rearranging terms and solving for rock medium volume in 1,000 ft^3 for the first step filter, the NRC formula becomes:

$$V = 0.263\ QL_i \left[\frac{(1 + 0.1r)^2}{1 + r}\right]\left[\frac{E}{1 - E}\right]^2$$

BOD_5 in primary effluent = (200) (1 - 0.3) = 140 mg/l.

Efficiency of a single filter (E)

$$E = \frac{140 - 30}{140} = 0.79$$

Volume using NRC formula

$$V = (0.0263)(0.2\ \text{mgd})(140\ \text{mg/1}) \left[\frac{(1.1)^2}{2}\right] \left[\frac{0.79}{0.21}\right]^2$$

$$V = (0.0263)(0.2)(140)(0.605)(14.15)$$

$$V = 6.30 \text{ or } 6{,}300\ ft^3$$

Given a depth of 6 ft (1.8 m), determine area and loading rates.

$$\text{Area} = \frac{6{,}300}{6} = 1{,}050\ ft^2$$

$$D^2 = \frac{4A}{\pi} = \frac{(4)(1{,}050)}{\pi}$$

$$D = 36.56 \text{ ft}$$

A 40-ft-diameter (12-m) trickling filter would provide additional area and volume for clearance at end of distributor arms and area at center column.

Actual area of such a filter:

40-ft diameter (overall)	1,257 ft^2
Assume 9-in. arm clearance (periphery loss)	−93 ft^2
and 3-ft diameter for center column (center loss)	− 7 ft^2
Actual area	1,157 ft^2

Check hydraulic loading.

Each filter designed for 0.2 mgd plus 0.2 mgd recycle or 0.4 mgd.

$$\text{Hydraulic loading} = \frac{(0.4)(43{,}560)}{(1{,}157)} = 15 \text{ mgad}$$

Check organic loading

$$\text{Actual volume} = (1{,}157)(6) = 6{,}942 \text{ ft}^3$$

$$\text{Organic loading} = \frac{(140)(8.34)(0.2)}{(6.942)} = 33.16/1{,}000 \text{ ft}^3$$

Both loading rates are within the high-rate filter ranges (Table 9-1).

To allow operation between a maximum flow of four times the average (0.2 mgd) and a minimum flow of one-fourth the average, the plant must be designed with great flexibility. One method of design is to operate two filters in series, up to 1.5 times the average flow of 0.3 mgd, with 0.2 mgd recycle (total 0.5 mgd). Operation in a series maintains the biological slime in both filters during low flow conditions. If high flow occurs, the units should be switched to parallel operation. Each unit would be able to handle 0.5 mgd, which exceeds four times the average or 0.8 mgd maximum flow. At extreme maximum flow, the recycle would be reduced to zero, with 0.4 mgd to each filter. Operation with recycle and in series will result in higher costs, but will provide better than average treatment up to two times the average flow. Above this amount, the treatment will be reduced.

If the two units operate in series up to four times the design flow with 0.2 mgd recycle, maximum flow through each unit would be:

$$(4)(0.2) + 0.2 = 1.0 \text{ mgd or } 694 \text{ gpm}$$

Minimum flow design may be controlled by minimum plant flow, minimum required flow for reaction distributor, or minimum flow plus recycle. At low plant flow, recycle may not be required, except to maintain a minimum wetting rate or rotation of the distributor. Final selection of maximum and minimum flows to the distributor must be based on operating conditions and the limits of rotary distributor design.

Minimum plant flow = 0.05 mgd or 35 gpm

With 0.2 mgd recycle = 0.25 mgd or 174 gpm

Using the available recirculation of 0.2 mgd or 138 gpm, the units can operate at minimum flow plus recycle, requiring a rotary distributor with a 4 to 1 range (from 700 gpm maximum to 175 gpm minimum).

Recirculation System

Recirculation for this process should be provided around each trickling filter, with a maximum flow rate of 0.2 mgd. Control of each system should be provided to operate the units with any recycle rate at design flow and to reduce the rate as total flow reaches the capacity of the distributor. Below design flow, control of recycle will be required to maintain minimum flow to the distributors.

Underdrain and Air Vent Systems

For a rock trickling filter, the use of vitrified clay underdrain blocks will provide adequate support of the medium and adequate space for air flow. The blocks will be placed on a floor with a pitch of 1 percent to a center collection channel.

Design the center channel for a minimum velocity of 2 fps (0.6 m/s) and to flow only half full at 0.4 mgd (0.018 m^3/s).

Channel cover blocks are available in lengths of 16, 18, 24, 30, 32, and 36 in. (406, 457, 610, 762, 813, and 914 mm) and require 3-in. (76-mm) bearing area on the ends.

9.1.7.3 Design of Plastic Media Trickling Filter Plant

With plastic media, the Schulze formula can be used. This formula is:

$$\frac{L_e}{L_i} = e^{-\theta KD/Q^n}$$

where

L_e = BOD_5 of unsettled filter effluent, mg/l
L_i = BOD_5 of filter influent, mg/l
θ = $1.035^{(T-20)}$
K = constant (treatability)
D = filter depth, ft
Q = flow rate, gpm/ft^2
T = temperature °C

Additional design conditions

1. Design plastic medium towers for conditions described in 9.1.7.1 and 9.1.7.2.
2. Provide nitrification during dry-weather months at maximum dry-weather flow (assume maximum dry-weather flow is approximately equal to average daily flow).

Sizing of Filter

Determine treatability of wastewater by finding the weighted value of K, given the BOD_5 load to the filter for each component, as follows:

Component	Flow mgd	BOD_5 mg/l	Load lb/day	Percent
Domestic	0.15	140	175	75
Industry 1	0.04	119	40	17
Industry 2	0.01	228	19	8
Totals	0.20	487	234	100

K values based on previous studies:

	K at 68° F	Fraction	K
Domestic	0.08	(0.75) (0.08)	0.0600
Industry 1	0.06	(0.17) (0.06)	0.0102
Industry 2	0.02	(0.08) (0.02)	0.0016
			0.0718

Determine required depth:

Assume n = 0.5 for medium used and Q = 0.85 gpm/ft^2

$$\theta = 1.035^{(7-20)} = 0.639$$

$$L_e/L_i = \frac{30}{140} = e^{-(0.639)(0.0718)\,D/(0.85)^{0.5}}$$

$$0.214 = e^{-0.046D/0.92} = e^{-0.05D}$$

$$\text{Ln}\ (0.214) = -0.05D$$

$$D = \frac{-1.54}{-0.05} = 30.8 \text{ ft}$$

Two 16-ft towers would provide the required treatment at 7° C.

Determine surface area:

At 0.85 gpm/ft^2 (note: 0.2 mgd = 138.9 gpm)

$$\text{Area} = \frac{138.9}{0.85} = 163.4 \text{ ft}^2$$

If circular towers are used:

$$D = \left[\frac{4A}{\pi}\right]^{0.5} = \left[\frac{(4)\ (163.4)}{\pi}\right]^{0.5} = 14.4 \text{ ft}$$

Use 14-ft diameter towers.

Check actual surface loading.

$$\text{Actual area} = \frac{\pi\ (14)^2}{4} = 153.9 \text{ ft}^2$$

$$\text{Surface loading} = \frac{138.9}{153.9} = 0.90 \text{ gpm/ft}^2$$

Check effluent quality with two towers, 16 ft deep with 0.90 pgm/ft^2 surface loading

$$L_e/L_i = e^{-(0.639)(0.0718)(32)/(0.90)^{0.5}}$$

$$L_e/L_i = 0.21$$

$$L_e = 0.21(140) = 29.4 \text{ mg/l}$$

Nitrification design

Check warm weather operation of towers in series.

Effluent concentration from first tower with minimum wastewater temperature of 13° C (a normal minimum summer temperature):

$$\theta = 1.035^{(13-20)} = 0.79$$

$$L_e/L_i = e^{-(0.79)\ (0.0718)\ (16)/(0.90)^{0.5}} = 0.38$$

Effluent BOD_5 from first tower = (0.38) (140) = 54 mg/l

$$\text{Volume of one filter} = \frac{(16)\,(14)^2\,\pi}{(4)} = 2{,}463\ ft^3$$

Organic loading on second filter.

$$\frac{(54)\,(8.34)\,(0.2)}{(2.643)} = 36.6\ \text{lb}\ BOD_5/1{,}000\ ft^3/\text{day}$$

This loading does not meet the five to eight range desired (as discussed in Section 9.19).

Try with effluent from both towers or one tower 32 ft deep with additional filter or filters for nitrification.

$$\frac{L_e}{L_i} = e^{-(0.79)(0.0718)(32)/(0.90)^{0.5}} = 0.15$$

Effluent BOD_5 = (0.15)(140) = 21 mg/l

BOD_5 loading = (21) (8.34) (0.2) = 35 lb/day

At 8 lb/1,000 ft^3/day, volume = 4,375 ft^3

At 14-ft diameter, depth = 28 ft

Two 14-ft diameter towers, each 30 ft deep, would provide nitrification in warm weather and could be designed to operate in parallel during high flow periods.

Check hydraulic loading rates.

Maximum loading = 555.6 gpm/153.9 ft^2 = 3.6 gpm/ft^2 (each filter)

Minimum hydraulic loading should be 0.5 gpm/ft^2

Minimum flow rate = (0.5) (153.9) = 76.95 gpm

Minimum plant flow = 34.72 gpm

Therefore, 77-35 = 42 gpm recycle is required at minimum flow.

Recirculation System

Recirculation for this system could be provided by a pump arrangement that would return 50 gpm of filter effluent if plant flow dropped below 80 gpm and would stop if 80 gpm were exceeded.

Rotary Distributor Selection

A rotary distributor can be selected as in the previous example, using 280 gpm maximum, 80 gpm minimum, and 3.5:1 range for a 14-ft-diameter trickling filter.

9.1.8 Clarification Requirements

Design of clarifiers for a trickling filter plant requires consideration of the total combination of unit processes, type and location of recycle flow(s), filter loading rates, and type of treatment provided. Clarification would normally be provided as primary treatment, intermediate sedimentation, or final sedimentation. In small plants, the elimination or simplification of a process is desirable. With proper design of the complete process, some sedimentation steps can be simplified or eliminated.

In Ohio and Maine, plants have been designed and operated using fine raw wastewater (wedgewire) screens in place of primary sedimentation before plastic medium trickling filters. The Ohio installation (2.3 mgd), as discussed by Wittenmyer (24) (25), found that raw wastewater screens can replace comminutors and primary clarifiers preceding a trickling filter and allow operation of the filter with rotary distributor, without clogging.

A 0.15-mgd (50,000 gal/8-hr day [557 m^3/day]) plant in Gorham, Maine, has been operating on wastewater from a school, using fine screens preceding a plastic medium tower with a fixed nozzle distribution system. Clogging has occurred only about once a month, and only in the last nozzle at the end of the distribution pipes. Clogging there can be easily cleaned and is not considered a serious problem (26). This example illustrates that primary sedimentation can be replaced with fine screens on small plants treating domestic wastewater, without clogging the trickling filters.

Intermediate sedimentation has been eliminated between trickling filters or between a trickling filter and an activated sludge process in many plants, reducing the sludge handling steps, and simplifying the process.

In designing a system to eliminate intermediate settling, the following factors may be useful:

1. If a filter without intermediate clarification is used, the percentage BOD removal in the filter will be 15 (difference between, not percentage difference) below that with clarification for modular-type plastic media (10).
2. If a trickling filter is used preceding the activated sludge process without intermediate settling, the humus solids would be similar to return activated sludge, and the unsettled (or soluble) BOD would be considered as load on the activated sludge process (10).

The design of a clarifier to remove sloughed trickling filter solids (humus or fixed film solids) is similar to the design of raw wastewater sedimentation tanks (see Chapter 6). Humus is generally more dense and will settle to higher solids concentration faster than activated sludge. The amount of solids to be separated would be low compared to separation

of the mixed liquor suspended solids; therefore, the design is controlled by hydraulic loading, not by solids loading.

Production of humus sludge depends on waste characteristics, loading, type of medium, and other conditions in a biofilter. An average of 20 to 30 percent of the BOD_5 removed is converted to sludge (domestic wastewater or carbohydrate wastes), if no distinction is made between soluble and insoluble components (27). The amount of sludge requiring treatment and disposal would be less for trickling filters than for activated sludge systems.

Humus sludge, which sloughs off a trickling filter, settles more readily and is more easily dewatered than are other secondary sludges. The anaerobic action occurring at the surface of the medium and the resultant reduction of volatiles in the growths probably account for the increased density of sludge. A sludge concentration in the final clarifier of 3 to 4 percent solids can be easily obtained, compared to 0.5 to 1.5 percent for activated sludge (27) (28).

If activated sludge bulking is a problem, as it is with a strong carbohydrate waste, trickling filters may be a practical solution (28).

In addition to the requirements for design discussed in chapter 6, trickling filter sedimentation tanks should be designed for a hydraulic loading of 1,000 to 1,200 gpd/ft^2 (40 to 48 $m^3/m^2 \cdot d$) for peak flow conditions (5). In small plants, the peak flow is very important because of large variations in flow.

In plants receiving large amounts of hexane solubles, primary clarification with efficient skimmers, or other grease removal devices, are required. Excessive grease can clog nozzles and reduce filter performance by covering the biomass. Limitation on quantities are similar to those for activated sludge processes, as discussed in Chapter 7.

9.1.9 Nitrification

Nitrification, as discussed in chapter 13, can be accomplished by biological treatment. Trickling filters will bring about various degrees of nitrification, depending on depth, size and type of medium, loading, liquid temperature, carbonaceous matter in wastewater, pH, and the presence of inhibitors.

Balakrishnan and Eckenfelder (29) studied nitrification in trickling filters, using a 6-ft-deep (1.8 m) laboratory scale unit, and correlated data from pilot plants and plants reported in the United States and Great Britain. These studies included trickling filters with bulk-packing media (e.g., broken rock and blast furnace slag) and some manufactured bulk media (e.g., Raschig rings and Berl saddles).

Conclusions of the studies are:

1. Hydraulic loading significantly affects the degree of nitrification which can be obtained. In the laboratory model, nitrification dropped from 72 percent to 52

percent, when hydraulic loading increased from 10 to 30 mgad (9.35 to 28.05 $m^3/m^2/d$).

2. Above a temperature range of 59° to 77° F (15° to 30° C), temperature had a great influence on nitrification.
3. For a given flow, specific surface, and temperature, the percentage of nitrification increased as the filter medium depth increased.

Duddles and Richardson (30) performed a detailed research program that demonstrated the feasibility of utilizing plastic medium (modular-type) in a step treatment system to achieve biological nitrification. This study concluded the following:

1. Plastic medium trickling filters are capable of achieving consistent, high-level nitrification (greater than 90 percent conversion), if operating on a low BOD_5 waste stream (15 to 30 mg/1) containing ammonia-nitrogen in the range of 10 to 20 mg/1.
2. Increased recycle provided improved flow stabilization, but had minimal effect on the overall degree of nitrification.
3. There appears to be a final effluent limitation for removal of ammonia-nitrogen below the range of 1 to 2 mg/1.
4. Visible slime growth on the medium was thin, tough, and resistant to drying, and net solids production was low. The SS and BOD_5 levels in the effluent were not significantly different from those in the influent. The tower effluent was passed directly to a mixed-media filter, without intermediate clarification.

In addition to the above conclusions, the study has shown that, at hydraulic loading rates between 0.5 to 2.0 gpm/ft^2 (29.3 to 117.3 $m^3/m^2 \cdot d$), organic loadings should be 5 to 8 lb BOD/1,000 ft^3/day (0.080 to 0.128 $kg/m^3 \cdot d$), for the modular, plastic media tested (specific surface, about 25 to 30 ft^2/ft^3).

The hydraulic loading rate should be kept low, and conditions such as temperature, pH, and the presence of toxicants should be carefully considered.

9.1.10 Equipment and Materials of Construction

Trickling filters of the rock medium type (shown in Figure 9-7) and plastic medium bio-oxidation towers (shown in Figure 9-8) are composed of the medium, a distribution system, an underdrain system, and walls. The equipment used for distribution and the materials used in walls and underdrains are important in filter design. Media have been discussed in Section 9.1.5.2.

The two types of distribution systems commonly used in the United States are rotary distributors and fixed nozzle systems. Another type, used in Europe, is a longitudinally traveling distributor. These systems are designed to provide uniform distribution of wastewater over the filter surface, with continuous or intermittent dosage. The choice of system, size, and configuration depends on available hydraulic head, variations in applied flow, filter configuration (round, square, or hexagonal), and method of flow application.

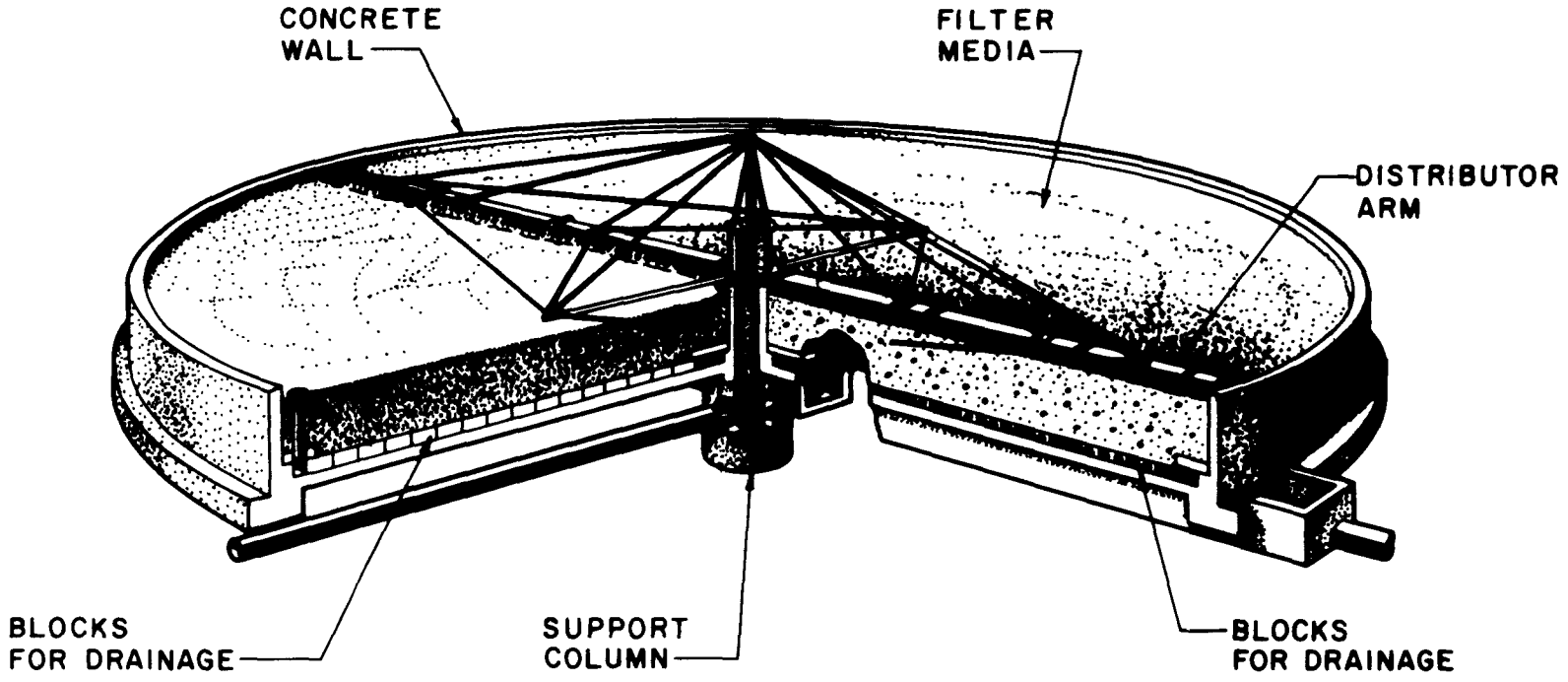

FIGURE 9-7

ROCK MEDIA TRICKLING FILTER

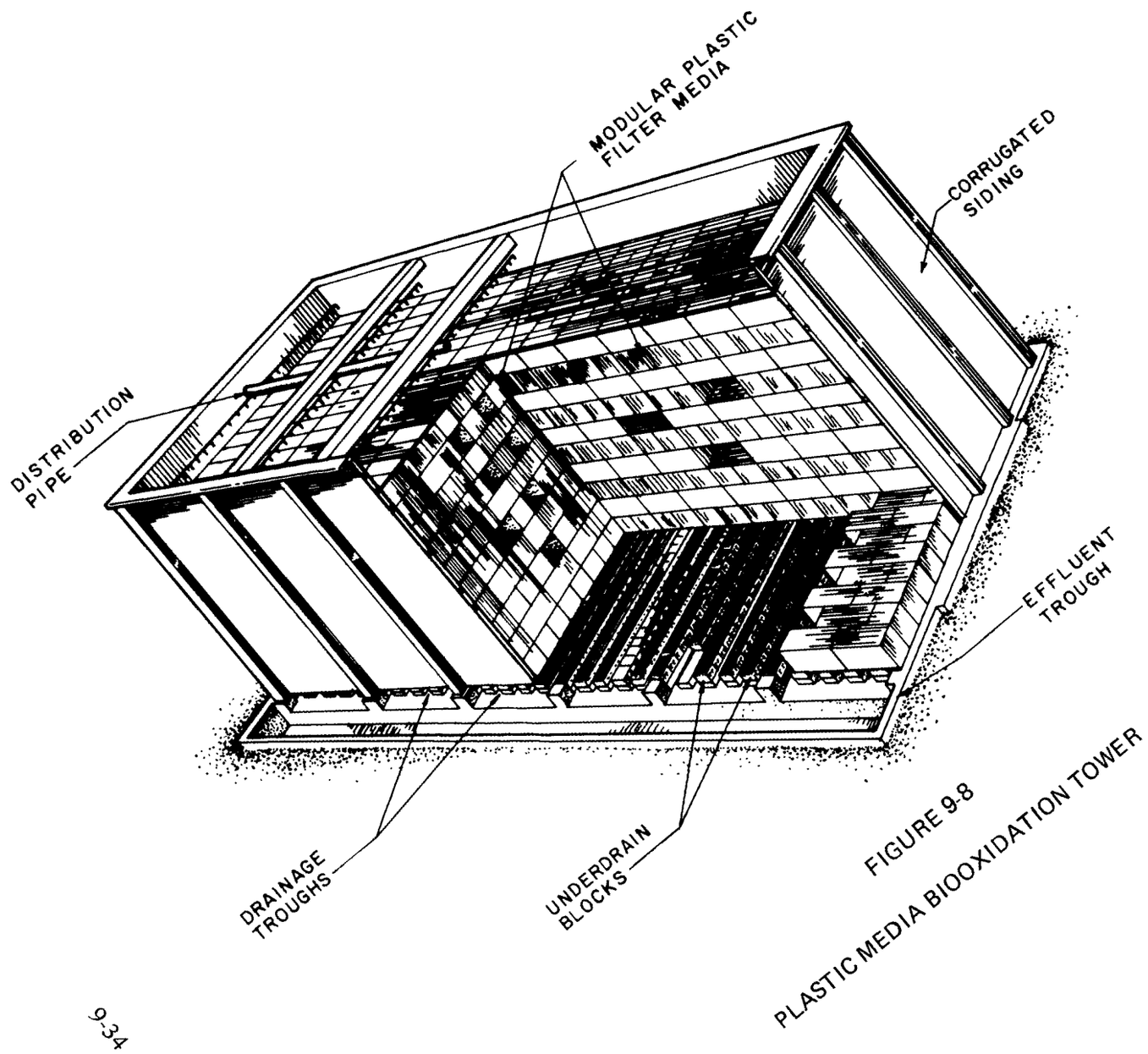

FIGURE 9-8
PLASTIC MEDIA BIOOXIDATION TOWER

The rotary distributor has been most popular because it is reliable, providing smooth and uniform intermittent dosing with minimal maintenance. The distributors normally consist of two or more arms that rotate around a center support. These arms are hollow and have nozzles that distribute the wastewater on the filter surface. The distributor is driven by the wastewater discharging from the nozzles on the side of the arms. If the flow rate varies greatly or a minimum head is available, motor-driven distributors can be used. For reaction-driven units, the speed of revolution normally varies with flow rate. The design should provide a speed of one revolution every 10 minutes, or less for a two-arm distributor at design flow.

The distributor arms should be designed with adequate adjustments, to set alignment and insure proper balance. Minimum clearance between the bottom of the arms and the medium, or end of arms and walls, should be 6 in. (150 mm). In colder regions, where icing may be a problem, 12 in. (0.3 m) of clearance should be provided. The arm may have a constant cross section or may be tapered to provide minimum transport velocities at low flows. At maximum flow, the peripheral speed of the arm should not exceed 4 fps (1.2 m/s). If flow variation is great, additional arms can be provided with weir arrangements, to allow use at higher flow conditions. The ends of the arms should be provided with quick-opening gates for easy flushing.

Distributors can be obtained for filters of 20-ft (6 m) diameter or greater. In selecting a distributor, a unit that can be easily maintained and that allows removal of the bearings without complete disassembly should be provided. The bearings may be grease or oil lubricated, with seals similar to the neoprene gasket type. Mercury seals have been banned by the U.S. EPA, because of possible contamination of the effluent (31).

The fixed nozzle system is not normally used in rock filters designed in recent years. However, in plastic medium towers, these systems are being increasingly utilized. The shape of the medium lends itself to placement in rectangular units, which can then be provided with fixed nozzle systems for continuous or intermittent dosage. Distribution piping and nozzles can be made of many materials. Several manufacturers provide plastic nozzles, which work well with polyvinyl chloride (PVC) pipe, will not clog easily, can be cleaned easily when clogged, and are economical to install. This type of system can be designed using the dispersion conduit approach, recommended by Camp and Graber (32), to provide uniform distribution (illustrated in Chapter 3).

The underdrain system is another important part of a trickling filter. This system supports the filter medium, provides space for passage of wastewater and sloughed solids through the filter, enables collection of wastewater and solids, and provides space for ventilation of the filter.

Rock trickling filters or other bulk-packaged units are normally designed using special vitrified clay blocks with slotted tops and drain channels with curved inverts. These blocks may be obtained from members of the Trickling Filter Institute (33).

The open area of the slots in the top of the underdrain blocks should be a minimum of 15 percent of the filter area. The blocks are normally placed on a floor that is pitched at a 1 to 2 percent slope toward a main collection channel.

All channels should be provided with adequate slope to insure a minimum velocity of 2 fps (0.6 m/s) at average daily flow. The underdrain system should be designed so that no more than 50 percent of the cross section area is submerged at maximum daily flow. The ends of the main collection channels should be provided with open grating manholes, to provide ventilation and access for inspection and cleaning. The overall area for the open grating and vent stacks (placed around the filter) should provide 1 $ft^2/250\ ft^2$ of filter area (14).

Underdrains for synthetic media filter are designed like those for bulk-packed filters, with different requirements for ventilation and amount of support. Manufacturers of these media have recommendations for both support and amount of ventilation required (10) (11). Some of the systems that have been used are vitrified clay blocks, corrosion-resistant grating, or concrete beams, some examples of these systems are shown in references (10) and (11).

Walls for trickling filters contain the medium, protect the filter from wind, and allow for flooding the filter to eliminate problems with filter flies and ponding. Although some rock filters have been constructed without walls (allowing the medium to slope off at its angle of repose), normal construction consists of concrete block, vitrified clay block, or concrete. These walls are designed to contain the medium, restrain earth loads from backfill, and allow flooding of the filter. Rock filters are normally shallow, because of practical construction limits and ventilation considerations.

The modular-type medium is usually self-supporting; therefore, walls are not required for support. These units do not have problems with flies or clogging and hence, do not require flooding. The main reasons for constructing walls around modular filters are protection from wind, containment of water trickling through the medium, and general appearance of the tower (normally constructed aboveground). Materials used for wall construction, therefore, are numerous. Some walls used for this type of filter have been constructed of concrete block, poured concrete, steel plate, redwood, or structural frame and panel construction. Selection of wall material and construction should depend on life of the filter, availability of material, appearance, and economics. If sectional materials or blocks are used, the wall should be sealed to prevent seepage of wastewater through the wall at joints. Seepage can stain the outside of the unit and detract from its appearance in a short period of time.

9.1.11 Northbridge, Massachusetts, Rock Trickling Filters–Case Study

Northbridge is located in central Massachusetts, about 15 miles south of the city of Worcester. The Northbridge wastewater treatment facility is located on the Blackstone

River, which is considered class C, based on the State of Massachusetts "Waste Quality Standards." This classification requires that the plant produce an effluent that will not reduce the river's dissolved oxygen (DO) below 5 mg/1; cause a pH outside a range of 6.0 to 8.5; contain chemicals harmful to fish life; or cause unreasonable sludge deposits, turbidity, odors on discharge, or floating solids. The plant is also required by the EPA to provide secondary treatment (30 mg/1 or less BOD_5 and SS).

To meet these requirements, the plant uses comminution, primary sedimentation, high-rate rock trickling filters, secondary sedimentation, sand filter beds (during low river flow periods), and hypochlorination. Sludge processing equipment includes a degritter for primary sludge, sludge holding tanks, chemical conditioning units, and vacuum filter (sludge and grit are hauled to landfill). Table 9-4 shows design and operational data, and Figure 9-9 is a schematic flow diagram of the facility.

9.2 Rotating Biological Contactors

9.2.1 General Description

Rotating biological contactors (RBC) have been used to a great extent in Germany, France, and Switzerland, and are now becoming popular in the United States. They have been used for almost 20 years in Europe, in plants ranging in size to serve populations of 12,000 to 100,000, treating both domestic and industrial wastes. In the United States, the process has been developed in package plants for flows between 10,000 and 120,000 gpd (0.44 to 5.25 $m^3/s \times 10^{-3}$). It has also been found suitable for plants up to 0.5 mgd and may be used for larger plants. (For further discussion of package plants see Section 8.4.) Figure 8-4 shows the basic arrangement of the units and the general configuration that can be used for larger installations.

9.2.2 Process Description

Basically, the process consists of a series of plastic disks mounted on a horizontal shaft and placed in a tank with a contoured bottom. The disks rotate slowly in the wastewater, with about 40 percent of the surface area submerged. During the rotation, the disks pick up a thin layer of wastewater, which flows over the disk surface and absorbs oxygen from the air. The fixed biomass film on the disk surface removes both DO and organic material from the wastewater. As the biomass becomes submerged in the wastewater, additional organic material is removed.

Excess micro-organisms and other solids are continuously removed, from the film fixed to the disks, by the shearing forces created by the rotation of the disks in the wastewater. This rotation also causes mixing, which keeps the sloughed solids in suspension so they can be carried through each step to a final clarifier.

The rotation disk process is similar to the trickling filter process, because both use fixed growth reactors. Some of the advantages of trickling filters also apply to the rotating disk process. These advantages include economics, simple operation and maintenance, suitability

TABLE 9-4

NORTHBRIDGE ROCK TRICKLING FILTERS

	Data	
	Operation 1972	Design 1990
Population Served	8,500	12,500
Flow, 24-Hour		
Average, mgd	1.1	1.8
Maximum, mgd	2.4	3.8
Raw Wastewater		
BOD_5, mg/l	158	193
SS, mg/l	185	206
Primary Sedimentation		
Overflow Rate,[1] gpd/ft^2	489	800
Depth at Weir, ft	10	10
Retention Time,[1] hours	3.6	2.2
BOD_5 Removal, percent	35	35
SS Removal, percent	59	60
Trickling Filters		
Hydraulic Loading (With Recirculation), mgad	13	28
Organic Loading (No Recirculation), lb/day/1,000 ft^3	28.4	57.0
Recirculation Ratio	0.5	1.0
Final Sedimentation		
Overflow Rate,[1] gpd/ft^2	489	800
Depth at Weir, ft	7.25	7.25
Retention Time,[1] hours	2.9	1.8
BOD_5 Removal, percent (Trickling Filter And Sedimentation)	82	76
Final Effluent		
BOD_5, mg/l	18	30
Overall Removal, percent	89	85
SS, mg/l	14	16
Overall Removal, percent	92	92

[1] Average Daily Flow

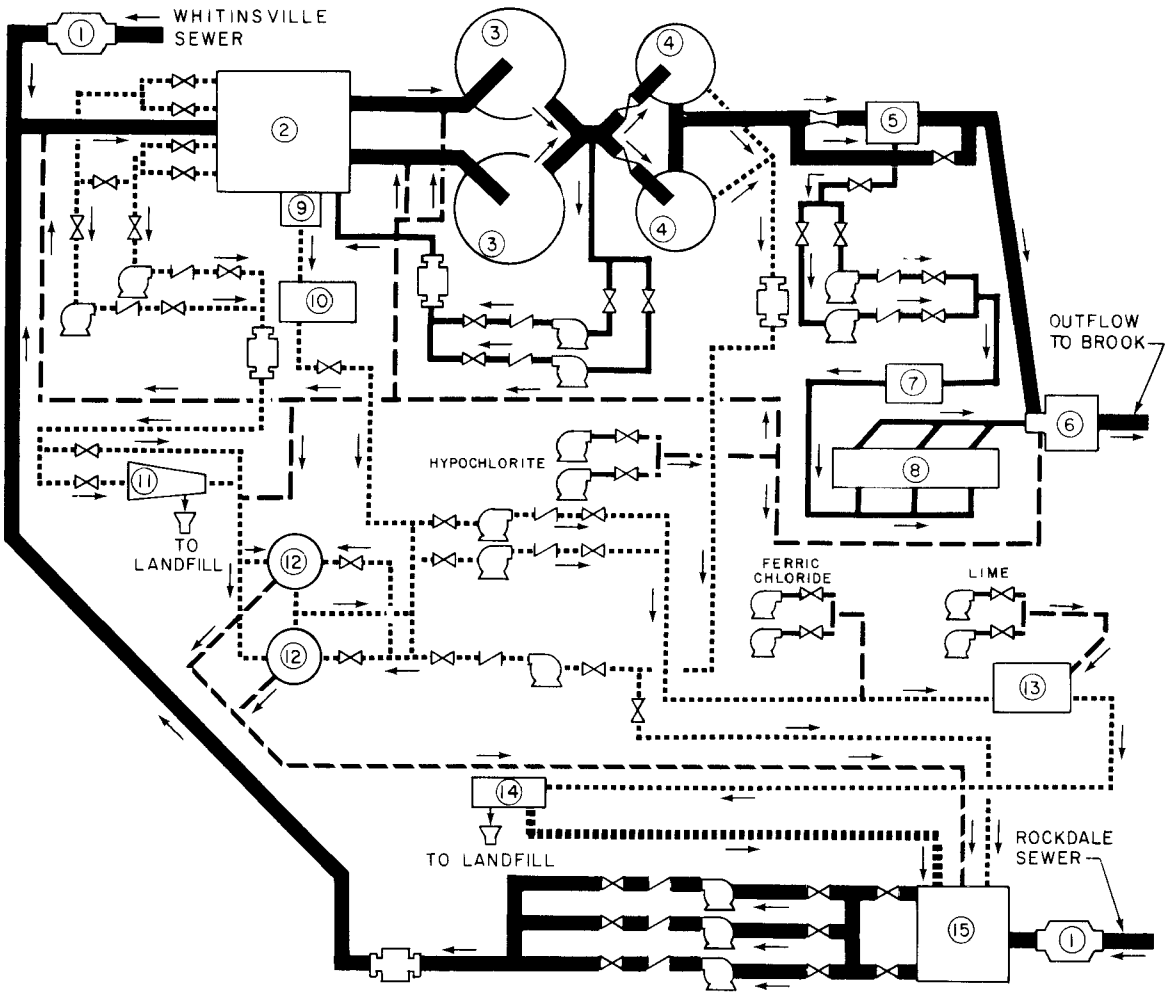

LEGEND

- WASTEWATER
- DRY WEATHER TERTIARY TREATMENT AND RECIRCULATED WASTEWATER
- SCUM AND SLUDGE PIPING
- HYPOCHLORITE, FERRIC CHLORIDE, OR LIME FEED
- FILTRATE
- OVERFLOW
- METERS
- GATE VALVE
- CHECK VALVE
- PUMP

1. COMMINUTOR
2. PRIMARY SEDIMENTATION BASINS
3. TRICKLING FILTERS
4. CLARIFIERS
5. EFFLUENT STRUCTURE
6. CHLORINE CONTACT BASIN
7. DOSING CHAMBER
8. SAND BEDS
9. SCUM BOX
10. SCUM HOLDING TANK
11. DEGRITTER
12. SLUDGE HOLDING TANK
13. CHEMICAL CONDITIONER
14. VACUUM FILTER
15. HIGH LEVEL WET WELL

FIGURE 9-9

NORTHBRIDGE, MASS. SCHEMATIC FLOW DIAGRAM

for step and stage construction, resistance to organic and hydraulic shock loads, and low process control requirements. The main disadvantage of the rotating disk process is the need to cover the disks to prevent freezing and to protect them from wind damage or vandalism. In the rotating disk process, the fixed biomass film passes through the wastewater, providing contact of all organisms with the wastewater, preventing clogging of the medium, and providing continuous wetting, which prevents development of filter flies. Different aeration and contact time can be provided by varying the rotational speed of the disks.

9.2.3 Application of Process at Small Plants

RBC units are especially suited for use in small plants, because of the advantages mentioned previously. They can be used in place of other biological treatment processes to meet secondary effluent requirements. If proper conditions exist, ammonia-nitrogen removal can be accomplished by proper sizing and arrangement of the units.

RBC units can be supplied as package plants, complete with steel tank and drive equipment, for capacities up to 200,000 gpd (800 m^3/d), depending on required surface loading rate. If the units are combined in a package with standard clarifiers and chlorine contact tanks, the capacity range becomes 5,000 to 90,000 gpd (20 to 360 m^3/d), depending on required surface loading rate. Plants with greater than 90,000 gpd (360 m^3/d) flow would use separate clarifier and chlorine contact tanks.

Disks can also be supplied on shafts, which can be mounted in concrete tanks. These units can treat flows up to 250,000 gpd (1,000 m^3/d), depending on surface loading rate. If flows exceed 250,000 gpd (1,000 m^3/d), shafts with varying disk arrangements can be combined in series and parallel configurations, to provide the type and degree of treatment required.

There are many combinations that can be used for arrangement of multiple RBC units or RBC units with other process equipment. Design manuals are available which show suggested RBC combinations, including their use with primary sedimentation tanks, septic tanks, and equalization tanks. Side-by-side and over-and-under configurations are also shown.

9.2.4 Basic Design Concepts

Much of the development of design criteria in this country has been done in Pewaukee, Wisconsin (34) (35) (36) (37) (38). The information included in this section (taken from these references) has been developed on domestic wastewater and is presented here as a guide. Changes in wastewater characteristics and configuration differences of biological contactor units may require different approaches to design. Manufacturers of RBC systems have developed design curves and procedures for use in designing wastewater treatment facilities. Some important considerations in the design of RBC units include:

1. Loading conditions
2. Retention time, multiple step systems, and rotational speed
3. Wastewater temperature
4. Pretreatment requirements

5. Clarification requirements
6. Sludge handling
7. Nitrification

9.2.4.1 Loading Conditions

Hydraulic loading is considered as the primary design criterion for rotating disk systems, stated as gpd/ft^2 (m^3/m^2d) of disk surface area (34). This criterion is based on domestic wastewater with a relatively small BOD_5 concentration range and may not be entirely valid for wastes with different BOD_5 concentrations. A unit studied in Wisconsin (34) obtained effluent BOD_5 concentrations of 12 to 20 mg/l for hydraulic loadings of 0.25 to 1.55 gpd/ft^2 (0.01 to 0.06 m^3/m^2d), with temperatures between 39° and 67° F (4° and 19° C), and disk speeds of 2 to 5 rpm. In general, as the hydraulic loading decreases, the effluent BOD_5 decreases, which in turn is related to ammonia-nitrogen removal.

Recirculation of wastewater flow is not normally provided in RBC systems. The RBC systems are designed in three or more steps, which work similarly to the increased depth of a super-rate bio-oxidation tower to provide increased retention time. Unlike the bio-oxidation tower, the RBC unit is wetted in the tank as it rotates, eliminating the need for recycle to provide a minimum wetting rate.

Organic loading (although not the primary design criterion) is very important in small plants and will affect the total process design. The reason for this importance is that the food-to-microorganism ratio is self-regulating within certain limits. If organic loading is constant, the biomass on the disks will develop to varying thicknesses, depending on the disk position within the process. A change in organic loading will effect a change in film thickness. In addition to thickness, the type of organisms in the film will adjust to the conditions. Organisms that can utilize large quantities of organic matter will locate and develop in the first step of the process. If organic loading is reduced so that the final steps are lightly loaded, nitrifying organisms will develop.

Changes in organic loading that occur slowly can be accommodated by adjustments in the biomass. If an RBC system is operated below design loading, the unit can provide treatment consistently better than required. As loading increases because of system development, the RBC unit will adjust accordingly.

Diurnal changes in organic loading, which may occur in larger plants and some small plants with balanced loading, can be handled by the adjustment of biomass. In small plants with large, rapid diurnal variations, equalization is desirable. Equalization (discussed in Chapter 4) will help provide efficient BOD_5 removal and reduce the size of process equipment.

9.2.4.2 Multiple Step Systems, Retention Time, and Rotational Speed

The rotating disk process is quite suitable for multiple step systems and stage construction. The number of disks per shaft appears to have some practical limits. Because of the limits, it is easy to arrange units of disks parallel or in series, to provide steps or stages. Study has

indicated that three-step systems may be desirable; if nitrification is required, a four-step system may be needed (37).

Retention time which also affects performance, is controlled in these systems by disk spacing and tank size. Increasing the spacing or tank size for a given hydraulic load will tend to increase the treatment capacity. The disk spacing and tank volume have been combined, for study purposes, into a single parameter, the volume-to-surface ratio. Antonie (37) found that the upper limit was approximately 0.12 gal of tank volume/ft^2 of disk area (0.005 m^3/m^2) above which the capacity did not increase.

The rotational speed can be varied to control the aeration and the contact time of the organisms with the wastewater. Peripheral disk velocities will range from 30 to 60 fpm (9 to 18 m/s) (34). At these speeds, the biomass is uniformly stripped of excess organisms. At lower values, aeration becomes limited; above this range, shear forces become great.

9.2.4.3 Wastewater Temperature

Temperature is an important factor in the design of any biological process and should be considered very carefully.

The Wisconsin tests were normally run at a wastewater temperature of 55° F (13° C) or above. At this temperature, the rotating disk process provided good BOD removal and nitrification. If the temperature was lowered, the treatment decreased rapidly.

Data for the lower temperature operation indicated that the degree of treatment at lower temperatures could be improved by increasing the volume-to-surface ratio (increasing disk spacing) or by decreasing the hydraulic loading rate (increasing the retention time). For example, a plant with a volume-to-area ratio of 0.12 may obtain 86 percent BOD removal at 4 gpd/ft^2 (0.16 $m^3/m^2/d$) at a temperature above 55° F (13° C). The same unit may have to be loaded at 2 gpd/ft^2 (0.07 $m^3/m^2/d$) to obtain the same treatment at lower temperature.

If the volume-to-area ratio is raised to 0.32, the loading required would be 3 gpd/ft^2 (0.12 $m^3/m^2/d$).

9.2.4.4 Pretreatment Requirements

The main pretreatment requirements for small plants treating primarily domestic waste would include primary sedimentation or fine screening and equalization. Primary sedimentation or fine screening would remove large, dense solids, which might settle out in the RBC process units. If large amounts of hexane soluble material are expected, a primary settling step would be preferred, or other grease separation methods would be required. In many smaller plants, a simple septic tank has been found to provide adequate treatment.

9.2.4.5 Clarification Requirements

Clarification requirements for totaling disk systems are similar to those for trickling filter systems. Primary settling is required, because the heavier solids cannot be carried through

the process. Intermediate sedimentation is not required, unless sludge removal is desired before a final step, such as nitrification. Final sedimentation is required and may be used before or after nitrification.

Design of final clarifiers for RBC systems should be similar to design of primary settling tanks, with the exceptions of hydraulic loading rates and side wall depth. The hydraulic loadings rates should be 1,000 to 1,200 gpd/ft^2 (40 to 48 m^3/m^2/d) for peak flow (5).

9.2.4.6 Sludge Handling

Sludge produced by the RBC unit is similar to humus sludge from a trickling filter. The amount of sludge produced will depend on waste characteristics and loading rates. An RBC unit designed for 80 percent BOD_5 removal would produce about 0.7 lb of sludge per pound of BOD_5 removed; 95 percent removal would produce about 0.3 lb of sludge (39).

Volume of sludge to be handled will be low compared to the volume from an activated sludge plant. The sludge produced is dense and will settle rapidly. If slow, continuous withdrawal is provided, sludge concentrations can be maintained at 3 to 4 percent solids (39). For design, 2 to 3 percent solids are considered reasonable. If secondary sludge is recycled to the primary clarifier, sludge with 4 to 6 percent solids can be obtained.

A few tests have been conducted (34) to determine the value of sludge recycle. At recycle rates of 1 to 2 percent of flow, there was no apparent effect on the system parameters. (Further study at higher rates is desirable.) In general, recycle of sludge or flow is not practiced.

9.2.4.7 Nitrification

Nitrification can be achieved using a properly designed 4- to 10-step rotating disk process, provided temperature, pH, and presence of toxic substances are considered. Nitrification is discussed further in Chapter 13.

As the BOD of the wastewater in the process is reduced in the first steps to 30 mg/1, the nitrifying organisms begin to establish themselves. As the BOD decreases, the ammonia-nitrogen removal increases. Nitrification will decrease, if the carbonaceous BOD is increased above the threshold for a specific wastewater (40). At a hydraulic loading of 1.0 gpd/ft^2 (0.04 m^3/m^2/d), ammonia-nitrogen removal of more than 95 percent and effluent concentrations of less than 1.0 mg/1 were attained with wastewater temperature above 55° F (13° C). Dentrification, using totally submerged disks and methanol addition, is being considered for rotating disk systems (36).

9.2.5 Example Design

Design procedures have been developed by manufacturers of rotating biological contactor systems. This information (39) (41) is available through the manufacturers and their representatives. The following example design uses the design procedure and criteria of one

manufacturer. This example shows only a typical design; the reader should not infer that any one design procedure is the best. The example design will use the site and wastewater characteristics given in Section 9.1.7.1.

Additional design conditions include:

1. Plant reliability, Class II
2. Pretreatment: coarse screening, grit removal, and primary sedimentation (30 percent removal)
3. Nitrification of 90 percent required during dry weather months at maximum dry-weather flow
4. Maximum dry-weather flow approximately equal to average daily flow

Determine Process Surface Area

BOD_5 of primary effluent = (200 mg/1) (1 - 0.3) = 140 mg/1.
For final effluent BOD_5 < 30 mg/1, RBC unit must provide 78.6 percent removal.

$$\frac{(140 - 30)\ (100)}{(140)} = 78.6 \text{ percent}$$

(Because this is less than 85 percent, the RBC unit would have had to be enlarged if nitrification were not included.)

From design curves for 79 percent removal with 140 mg/1 primary effluent, the required hydraulic loading is 6.9 gpd/ft^2.

$$\text{Surface area required} = \frac{200{,}000 \text{ gpd}}{6.9 \text{ gdp/ft}^2} = 28{,}986 \text{ ft}^2$$

Wastewater Temperature Correction

For 45° F (7° C) and 79 percent BOD removal, the temperature correction factor (from design curves) = 3.0.

$$\text{The corrected loading rate is } \frac{6.9}{3} = 2.3 \text{ gpd/ft}^2.$$

$$\text{Surface area required} = \frac{200{,}000 \text{ gpd}}{2.3 \text{ gpd/ft}^2} = 86{,}957 \text{ ft}^2$$

Nitrification Design

From design curve for 90 percent ammonia-nitrogen removal, secondary effluent BOD_5 would be 13 mg/1.

BOD_5 removal through RBC system would be:

$$\frac{(140 - 13)(100)}{(140)} = 91 \text{ percent removal}$$

From design curve for 91 percent BOD_5 removal, surface loading rate is 2.3 gpd/ft^2.

$$\text{Surface area required} = \frac{200{,}000 \text{ gpd}}{2.3 \text{ gpd/ft}^2} = 86{,}957 \text{ ft}^2$$

During warm, dry weather months, wastewater temperature would not drop below 55° F 13° C), and a temperature correction for nitrification would not be required.

Equipment Selection

Selection of RBC equipment will depend on site conditions (e.g., available space, contours, and head loss through the treatment facility). These conditions must be balanced with the number of standard units available, type and degree of treatment required, reliability, required steps, and stage construction.

The conditions and standard units indicate that two four-stage RBC shaft assemblies should be used, providing a total surface area greater than 90,000 ft^2 (8,370 m^2).

9.2.6 Equipment and Materials of Construction

The basic RBC unit consists of rotating medium and shaft assembly, drive system, shaft bearings, tankage, and enclosures. In smaller units this equipment can be provided in a completely assembled package. Larger units require construction of concrete tanks and enclosures (unless factory-made covers are used). Units supplied for concrete tanks are shipped in two parts, including the shaft and drive assemblies.

The shaft assembly consists of high density polyethylene or polystyrene disks mounted on a steel shaft. The shaft is fitted with drive sprocket and shaft bearing, to allow immediate installation on preset anchor bolts.

The drive assembly consists of the drive motor and a drive system, which could include belt drive, speed reducer or chain drive units. The drive motor could vary between 0.25 and 7.5 hp (0.19 and 5.6 kW), depending on the shaft size and the area of the contactors.

Construction of concrete tanks will depend on the RBC units used, overall arrangement, and flow distribution or control requirements. Suggested arrangements are included in design manuals (39) (40). Flow distribution or control methods can include piping or channels with various weir, baffle, and valve arrangements.

Enclosures can consist of plastic covers (available through RBC system manufacturers) on housing constructed around the units. Plastic covers have removable panels and parts, which

allow inspection of the medium and access to the drive assembly and bearings. In extremely cold climates, these covers can be supplied with urethane foam insulation.

If alternative means of housing are used, the structure should be designed to meet the following conditions:

1. All materials of construction must be able to withstand high humidity.
2. Ventilation should be provided, with control available to reduce ventilation in cold weather. Forced ventilation is not required, but could be provided.
3. Heat is not required even in cold weather, but can be used to reduce humidity problems.

9.2.8 Operation and Maintenance

The rotating disk process is stable under conditions of fluctuating hydraulic and organic load and, therefore, does not require recycling of sludge or flow recirculation. This stability simplifies the operation and eliminates the need for great operating flexibility and instrumentation.

The units should normally be provided with enclosures; operating in cold weather increases this need. In cold weather, the addition of a small amount of heat (a few degrees above wastewater temperature), although it will increase the operating cost slightly, will improve operation.

Maintenance of these units is also simple. Because the main mechanical components are those required to rotate the disks, and because separate drive units are provided for each set of disks, the operation can be shut down, a unit at a time, for servicing. The minimum number of moving components makes the servicing very easy; only weekly greasing of bearings and checking of lubricant levels in the chain guards are required. On a quarterly or semiannual basis, changes of lubricant will be necessary.

9.3 References

1. McKinney, R.E., *Microbiology for Sanitary Engineers.* New York: McGraw-Hill (1962).

2. "Wastewater Treatment Plant Design." WPCF *Manual of Practice No. 8* (1975).

3. *Design Criteria for Mechanical, Electric and Fluid System and Component Reliability, Supplement to Federal Guidelines: Design, Operation and Maintenance of Wastewater Treatment Facilities.* U.S. EPA, Office of Water Programs (1974).

4. Chipperfield, P.N.J., Askew, M.W., and Benton, J.H., "Multiple-Stage, Plastic-Media Treatment plants". *Journal Water Pollution Control Federation.* vol. 44, No. 10 (October 1972).

5. *Process Design Manual for Upgrading Existing Wastewater Treatment Plants.* U.S. EPA, Office of Technology Transfer (October 1974).

6. *Slag and Stone, Crushed; Gravel, Crushed and Uncrushed* (for sewage trickling media). Federal Supply Service, Federal specification SS-S-448, General Services Administration (12 August 1966).

7. "Filtering Materials for Sewage Treatment Plants." ASCE Manual of Engineering Practice No. 13, New York (1961).

8. Jank, B.E., Drynan, W.R., and Sylveston, P.L., *The Operation and Performance of Flocan-Packed Biological Filters Under Canadian Climatic Conditions.* Waterloo, Ontario: University of Waterloo (October 1969).

9. Chipperfield, P.N.J., "Performance of Plastic Filter Media in Industrial and Domestic Waste Treatment." *Journal Water Pollution Control Federation,* 39, 11, p. 1,860 (November 1967).

10. *Design Manual for Surfpac Biological Oxidation Media.* Dow Chemical Co., Midland, Mich., form No. 175-1216-71.

11. *Vinyl Care Biological Oxidation Media.* B.F. Goodrich General Products Co., Akron, Ohio.

12. Culp, G.L., "Direct Recirculation of High-Rate Trickling Filter Effluent." *Journal Water Pollution Control Federation,* vol. 35, No. 6 (June 1963).

13. Galler, W.S., and Gotaas, H.B., "Analysis of Biological Filter Variables." *Journal of the Sanitary Engineering Division,* ASCE, vol. 90, No. 6, pp. 59 to 79 (1964).

14. Metcalf & Eddy, *Wastewater Engineering.* New York: McGraw-Hill (1972).

15. Benzie, W.J., Larking, H.O., and Moore, A.F., *Effects of Climatic and Loading Factors on Trickling Filter Performance.* WPCF, vol. 35, No. 4 (April 1963).

16. Howland, W.E., "Effect of Temperature on Sewage Treatment Processes." *Sewage and Industrial Wastes,* vol. 5, No. 2, p. 161 (1953).

17. *Recommended Standards for Sewage Works.* Great Lakes-Upper Mississippi River Board of State Sanitary Engineers (1971).

18. "Sewage Treatment at Military Installations," National Research Council. *Sewage Works Journal,* vol. 18, No. 5, pp. 787 (1946).

19. Velz, C.H., "A Basic Law for the Performance of Biological Beds." *Sewage Works Journal,* vol. 20, p. 607 (1948).

20. Schulze, K.L., "Load and Efficiency of Trickling Filters." *Journal Water Pollution Control Federation,* No. 3, pp. 245 to 261 (1960).

21. Germain, J., *Economic Treatment of Domestic Waste by Plastic-Medium Trickling Filters.* 38th annual conference, WPCF, Atlantic City, N.J. (October 1965).

22. Eckenfelder, W.W., *Trickling Filter Design and Performance.* Transactions ASCE, 128, part III, pp. 371 to 398 (1963).

23. Eckenfelder, W.W., and Barnhart, W., "Performance of a High-Rate Trickling Filter Using Selected Media." *Journal Water Pollution Control Federation,* vol. 35, No. 12, pp. 1,535 to 1, 551 (1963).

24. Wittenmyer, J.D., *A Look At the Future Now.* Ohio Water Pollution Control Conference, Dayton, Ohio (20 June 1969).

25. Wittenmyer, J.D., *Operating Experiences.* Ohio Water Pollution Control Conference, Dayton, Ohio (16 June 1972).

26. Morton, D., "Personal Communication." *Allied Engineering* Gorham, Maine (1975).

27. Askew, M.W., "High Rate Biofiltration; Past and Future," *Water and Pollution Control,* vol. 69, No. 4, p. 445 (1970), as referenced to by Landine, R.C., in "Plastic Media Biofilters, Their Application in Canada," *Water and Pollution Control* (November 1972).

28. Downing, A.L., *Water Pollution Control Engineering,* British Board of Trade Central Office of Information (London, 1969), chapter 5, part 2, as referenced to by Landine, R.C., "Plastic Media Biofilters, Their Application in Canada," *Water and Pollution Control* (November 1972).

29. Balakrishnan, S., and Eckenfelder, W.W., "Nitrogen Relationships in Biological Treatment Processes - II. Nitrification Trickling Filters." *Water Research,* vol. 3, pp. 167 to 174 (1969).

30. Duddles, G.A., and Richardson, S.E., "Application of Plastic Media Trickling Filters for Biological Nitrification Systems." *Environmental Protection Technology Series,* EPA-R2-73-199 (June 1973).

31. *Technical Bulletin for Use of Mercury in Wastewater Treatment Plant Equipment.* supplement to *Federal Guidelines: Design, Operation & Maintenance of Wastewater Treatment Facilities,* U.S. EPA, Office of Water Programs (1971).

32. Camp, T.R., and Graber, S.D., "Dispersion Conduits." *Journal of the Sanitary Engineering Division,* ASCE, SA1, pp. 31 to 39 (February 1968).

33. *Handbook of Trickling Filter Design.* Ridgewood, N.J.: Public Works Journal Corp. (1970).

34. "Application of Rotating Disc Process to Municipal Wastewater Treatment." *U.S. EPA Water Pollution Research Series,* 17050 DAM (November 1970).

35. Antonie, R.L., *Application of the Bio-Disk Process to Treatment of Domestic Waste-Water.* Paper presented in part, 43rd annual conference, WPCF, Boston, Mass. (4 to 9 October 1970).

36. *Three Step Biological Treatment with the Bio-Disc Process.* Paper, New York WPCA, Montauk, N.Y. (12 to 14 June 1972).

37. *Factors Affecting BOD Removal and Nitrification in the Bio-Disc Process.* Paper, Central States WPCA, Milwaukee, Wis. (14 to 16 June 1972).

38. Kluge, D.L., and Mielke, J.H., *Evaluation of a 0.5-MGD Bio-Surf Municipal Waste-water Treatment Plant.* Paper, 45th annual conference, WPCF, Atlanta, Ga. (8 to 13 October 1972).

39. *Bio-Surf Design Manual.* Autotrol Corporation Bio-Systems Division, Milwaukee, Wis. (1972).

40. Stover, E.L., and Kincannon, D.F., "One-Step Nitrification and Carbon Removal." *Water & Sewage Works* (June 1975).

41. *Bio-Surf Process Package Plants for Secondary Wastewater Treatment.* Autotrol Corporation Bio-Systems Division, Milwaukee, Wis. (1974).

CHAPTER 10

WASTEWATER TREATMENT PONDS

10.1 Background

Wastewater treatment (stabilization) ponds are earthen basins, open to the sun and air. They depend on natural biological, chemical, and physical processes to stabilize wastewater. These processes, which may take place simultaneously, include sedimentation, digestion, oxidation, synthesis, photosynthesis, endogenous respiration, gas exchange, aeration, evaporation, thermal currents, and seepage.

For centuries, sewers have carried wastewater into natural ponds and other water bodies, sometimes, without nuisance conditions resulting. It was not until the 1920's that artificial ponds were designed and constructed to receive and stabilize wastewater. By 1950, the use of ponds had become recognized as an economical wastewater treatment method for small municipalities in rural areas.

Wastewater treatment ponds are now commonly employed as secondary treatment systems. The U.S. EPA *Municipal Waste Facilities Inventory* of 20 August 1974 indicated that these ponds constituted 31 percent of the 16,133 secondary treatment systems operating in the United States and served about 7.3 percent of the 104 million people served by secondary treatment plants (1). About 66 percent of these ponds serve small communities having flows of 0.2 mgd (0.01 m^3/s) or less (1).

Because of increasingly stringent effluent requirements, ponds, like many other wastewater treatment processes, will usually require modification of design and operation to meet all objectives. Pond problems fall into three general areas: 1) unsatisfactory effluent quality, 2) odors and other environmentally incompatible factors, and 3) water loss. These problems usually relate to a need in the design for better pond siting, microbial cell removal, and disinfection; lack of consideration of temperature effects and odor control; and no minimization of short circuiting by better hydraulic design.

The major advantages of ponds are 1) they can handle considerable variations in organic and hydraulic loading with little adverse effect on effluent quality and 2) they require minimum control by relatively unskilled operators. Low capital costs and low operation and maintenance costs are also advantages. The major disadvantages are 1) the large land area required, 2) the localized odor problems that occur when conditions become anaerobic (more difficult to prevent if icing occurs), and 3) excessive accumulation of algal and bacterial cells in the effluent, which creates a significant BOD and SS load on the receiving waters. It should be pointed out that the U.S. EPA has proposed raising the SS limitations for ponds on a case-by-case basis (Federal Register, Vol. 41, No. 172, September 2, 1976).

10.1.1 Natural Stabilization Processes

With careful planning, design, and operation, natural processes can be efficiently utilized in stabilization ponds (see Figure 10-1).

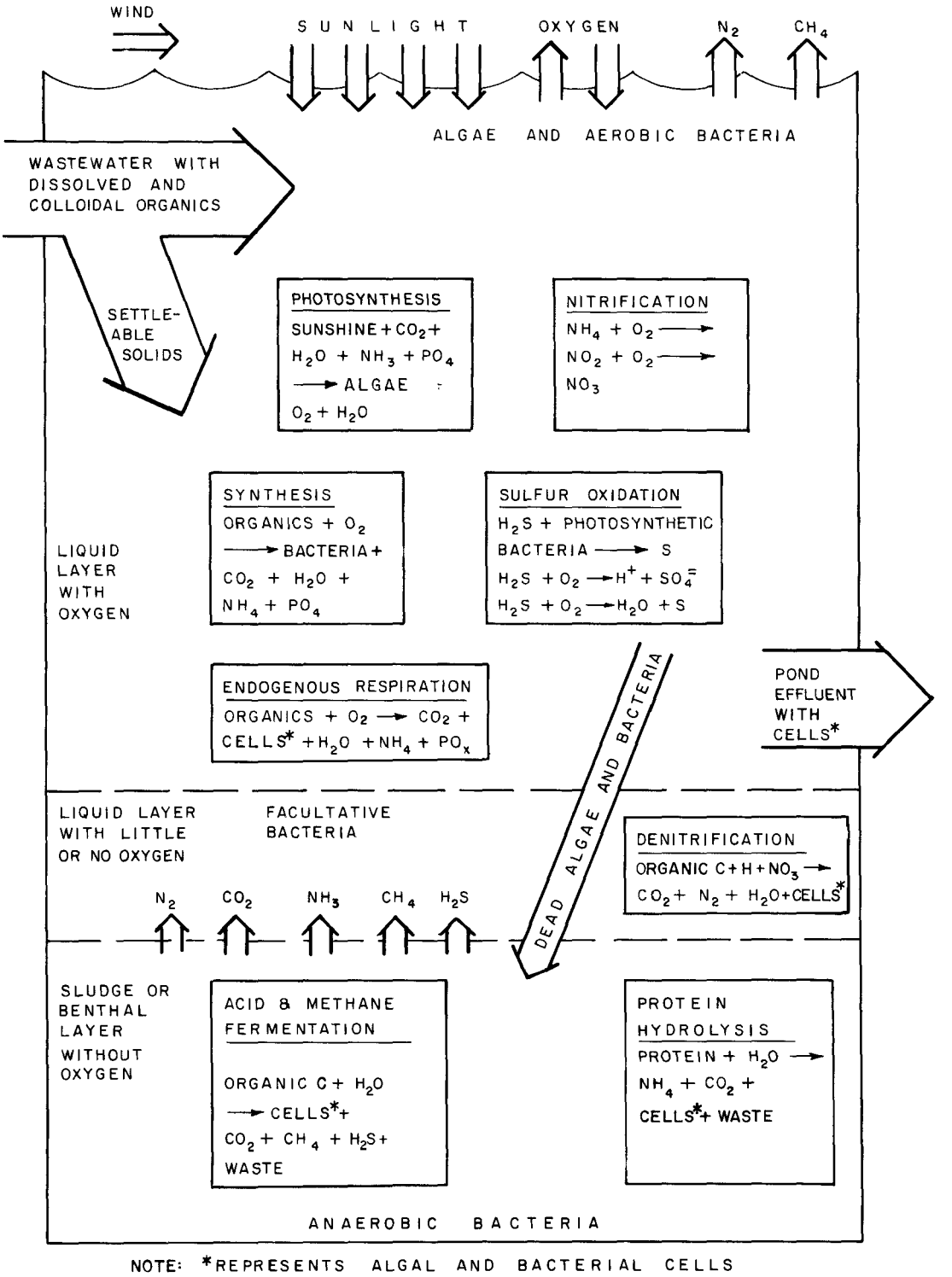

NOTE: *REPRESENTS ALGAL AND BACTERIAL CELLS

FIGURE 10-1

ACTIVITY IN FACULATIVE PONDS

The organic materials, suspended or dissolved in the raw wastewater or scoured from the bottom by intrapond mixing (as a result of wind or thermal turnovers), are biochemically stabilized, usually aerobically, by bacteria, algae, and, to a smaller extent, other biota. Bacteria release enzymes into the water that catalyze chemical reactions, producing simpler chemicals used to synthesize new cells and aid cell metabolism. The organic carbon is broken down by heterotrophic bacterial action, which results in the formation of carbon dioxide (CO_2), H_2O, and residues. The organic nitrogen, largely in the form of urea or protein, is broken down by enzyme-catalyzed reactions–initiated by heterotrophic faculative and anaerobic bacteria–to form ammonia (NH_3), new bacterial cells, CO_2, and residues. Algae grow symbiotically with bacteria: algae utilize CO_2 in photosynthesis to produce new cells and release oxygen (O_2) as one of the byproducts; bacteria utilize this O_2 and produce CO_2 as a byproduct. However, at night and during endogenous respiration algae also use O_2 and oxidize some of the compounds they have produced and stored during the period of photosynthesis.

The settleable solids, including dead microbial cells, settle to the bottom of the aerobic zone into an anaerobic zone, reducing the requirements for dissolved oxygen (DO). Such solids undergo acid and methane (CH_4) fermentation, hydrolysis, and other biochemical changes. These changes result in the formation of new bacterial cells, provide energy for the cells, and release CH_4, CO_2, hydrogen sulfide (H_2S), NH_3, various organic acids, and residues. The NH_3 and sulfurous gases that evolve in the anaerobic decomposition rise into the aerobic zone, where nitrification and sulfide-oxidizing bacteria convert the NH_3 to nitrite and nitrate and the sulfides to sulfates and sulfur. If liquid containing nitrate enters an anaerobic zone, denitrifying bacteria reduce the nitrate to gaseous nitrogen, which escapes to the atmosphere. In some cases, nitrogen-fixing bacteria convert gaseous nitrogen to nitrates in stabilization ponds.

Dead algal and bacterial cells undergo lysis, or disintegration, in the same manner as other dead organic matter and, in the process, create an oxygen demand. On the other hand, the products of disintegration, O_2 and CO_2, provide nutrients for the synthesis of new algal cells, and the synthesis continues until the synthesis-decay-sedimentation cycle leads to removal of most of the BOD_5 and SS from the wastewater. Provision must be made for the consistent removal of cells from the liquid zones of the pond system, if a uniformly satisfactory effluent is to be produced. The optimum temperature for efficient functioning of treatment ponds is 68° to 77° F (20° C to 25° C). When the water temperature reaches 34° F (1° C) or lower, general bacterial action becomes quite reduced. If an ice cover forms, there is little available oxygen, and metabolism continues only at a very slow rate. At water temperatures below about 57° F (14° C), there is little anaerobic methane production or reduction of sludge volume.

Although the equations in Figure 10-1 oversimplify the tranformations, they do show the recycling of carbon in ponds. The net effects of this carbon recycling mechanism are 1) considerable decomposition of the solids originally in the raw wastewater, 2) some loss of the carbon load of the raw wastewater and bottom sludge (as CO_2 or CH_4) to the atmosphere, and 3) conversion of much of the soluble and organic material into bacterial and algal cells. Unless the microbial cells are removed by settling into the anaerobic bottom sediment, or by

a long period of aeration (which allows time for lysing and more complete oxidation), or by some solids removal process after the pond treatment, little carbon reduction may occur. Cells that escape into the effluent carry potentially oxidizable organics and nutrients, such as nitrogen and phosphorus. There are many good references covering the various stages of pond processes (2) (3) (4) (5).

In other words, half or more of the original organic constituents exert an oxygen demand for a long time after the initial synthesization process.

10.2 Definitions and Descriptions of Wastewater Treatment Ponds

There is general confusion in the terminology used in the classification of ponds. In this manual, ponds are classified as follows:

1. Facultative Ponds
2. Aerated Ponds (which can be further classified as to the degree of mixing)
3. Aerobic Ponds
4. Polishing Ponds
5. Anaerobic Ponds

In the U.S. EPA Bulletin *Wastewater Treatment Ponds* (6), ponds are divided into photosynthetic, aerated, and complete retention ponds. The photosynthetic ponds (i.e., facultative, aerobic, polishing) are subdivided into flow-through and controlled-discharge types. The aerated ponds are subdivided into complete-mix and partial-mix types.

10.2.1 Facultative Ponds

Facultative ponds are medium depth ponds, with an aerobic zone overlying an anaerobic zone (with some sludge deposits) and a zone between the two, where facultative bacteria primarily function. Solids in the anaerobic zone undergo fermentation and hydrolysis, and the soluble organics and NH_3 rise into the aerobic zone to be oxidized. Facultative ponds are sometimes called oxidation ponds or aerobic-anaerobic ponds. Most wastewater treatment ponds in the United States are facultative ponds and are used to treat domestic wastewater, industrial wastewater, or a combination of both. Facultative ponds are often used as the final cells, if anaerobic ponds are used as the initial cells. The design of facultative ponds is described in Section 10.4.

10.2.2 Aerated Ponds

Ponds using mechanical devices as the principal sources of DO are called aerated ponds. Completely mixed aerated ponds (also called aerated aerobic ponds) keep all of the solids in suspension, and O_2 is provided by air diffusers or mechanical aerators. In partially mixed aerated ponds (also called aerated facultative ponds), only the upper zone is aerated by diffusers or mechanical aerators; the lower facultative and/or anaerobic zones are relatively undisturbed. The partially mixed aerated pond is particularly adaptable for northern areas, because it permits the continuation of aerobic oxidation, under the ice, to prevent spring

odor problems. Aerated pond effluents, although they may not contain large amounts of algae, may contain other suspended microbial cells and biological solids, resulting from the conversion of the dissolved BOD and the SS from the raw wastewater. Aerated pond design is described in Section 10.5.

10.2.3 Aerobic Ponds

Aerobic ponds are shallow ponds that contain DO throughout their liquid volume at all times (i.e., there are no anaerobic zones). Aerobic bacterial oxidation and algal photosynthesis are the principal biological processes. Aerobic ponds are best suited to treating soluble wastes in wastewater relatively free of SS. Thus, they are often used to provide additional treatment of effluents from primary wastewater treatment plants, anaerobic ponds, and other partial treatment processes. The design of aerobic ponds is described in Section 10.6.

10.2.4 Polishing Ponds

Polishing ponds are lightly loaded, aerobic or facultative ponds that polish the effluent from conventional treatment plants by further reducing the settleable solids, BOD, fecal bacteria, and NH_3. Algal photosynthesis and surface reaeration provide the O_2 for stabilization. Polishing ponds should be designed with detention times insufficient to support algal development—60 hours or less—unless phosphorus (P) removal is a prime concern. Figure 10-2 depicts the effect of a polishing pond on the removal of SS, P, and nitrate-nitrogen, and on the growth of algae and coliform organisms (7). Polishing pond design is described in Section 10.7.

10.2.5 Anaerobic Ponds

Ponds that are so heavily loaded organically that they do not have an aerobic zone (except, possibly, at the surface) are called anaerobic ponds. Only partial stabilization takes place. Anaerobic ponds must be followed by facultative or aerobic ponds, or other additional treatment, to complete stabilization of the organic material and provide additional solids removal.

Anaerobic ponds are typically used as the first step for treatment of strong organic wastes, such as those from industries processing vegetables and fruits, meats, milk, or other foods. These ponds are not ordinarily used for treatment of domestic wastewater, although they may be applied as a first treatment step if the wastewater is abnormally strong because of industrial discharge. The design of anaerobic ponds is not discussed in this manual, which is intended for use in the design of facilities treating normal domestic wastewater.

10.3 General Design Requirements

10.3.1 Common Design Considerations

The performance of all wastewater treatment ponds is particularly affected by 1) organic loading per unit area, 2) temperature and wind patterns, 3) actual detention time, dispersion,

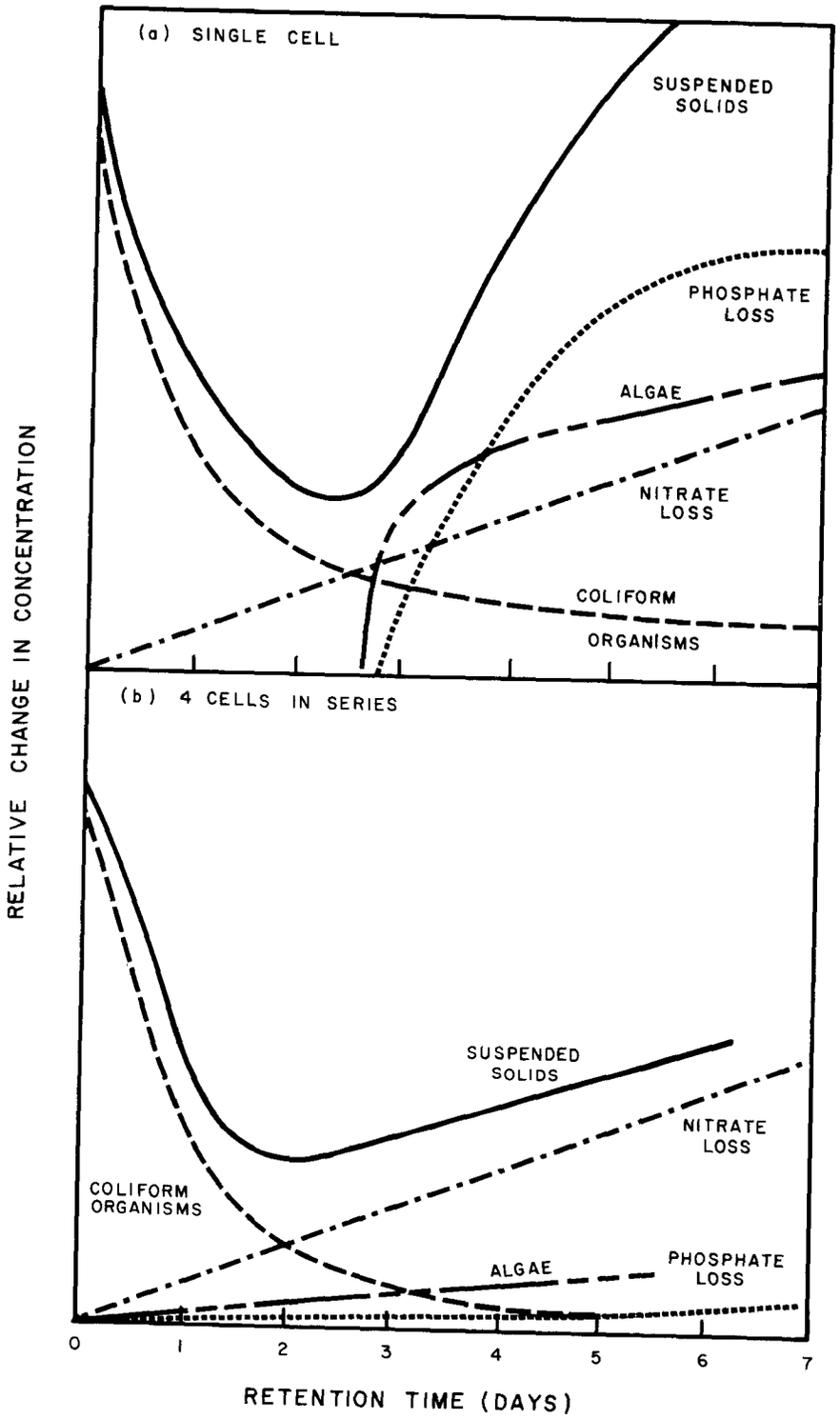

FIGURE 10-2

PERFORMANCE OF POLISHING PONDS
FOLLOWING SECONDARY TREATMENT (7)

and mixing characteristics, 4) sunlight energy, 5) characteristics of the solids in the influent, and 6) amounts of essential microbial nutrients present. Pond efficiency, measured as the degree of stabilization of the incoming waste particles, is dependent on both biological process kinetics and pond hydraulic characteristics.

The time required to synthesize cells from waste organic solids (suspended or dissolved) can be determined by kinetic computations. For kinetic computations, the value of the reaction rate coefficient (k) for the specific wastewater should be determined as accurately as possible, taking into account the BOD loading per unit area, quantity and types of pollutants, temperature, available solar energy, probable types of biota, hydraulic characteristics, nutrient deficiencies, toxic wastes, source of O_2, effluent requirements, and other biological parameters (8) (9).

BOD bottle determinations of rate coefficients do not give good results, unless the sample is undiluted and is stirred to the same degree as would be expected in the ponds. Oxygen uptake tests determine the rate coefficient better than do BOD bottle tests. The types of respirometers available for obtaining O_2 uptake range from simple to complex. The simplest fits on a BOD bottle and includes a stirrer and DO probe.

The reaction rate coefficient for carbonaceous oxidation is greater than the coefficients for oxidation of NH_3 and nitrites to nitrates. A completely mixed pond, or one with recirculation, will undergo nitrification in less time than will a plug-flow pond without recirculation, because of the larger initial concentration of nitrifying bacteria. With recirculation to provide nitrifiers, plug flow is the more efficient. To select the reaction rate coefficient if nitrification is required, the initial concentration of nitrifiers, organic carbon, DO, and wastewater temperature profile must be considered.

The organic carbon compounds in raw wastewater are more easily oxidized during initial stabilization (synthesis into microbial cells) than in the endogenous respiration stage. This difference will affect the values of the reaction rate constant. The rate constant will decrease as the samples tested are from points further downstream.

In a plug flow situation, with water temperature at 68° F (20° C) the k value increases as the ratio of BOD_5 to BOD_u increases in the wastewater, as shown in Table 10-1 (10). Raw domestic wastewater usually will have a BOD_5 to BOD_u ratio of about 0.5.

The first order reaction rate coefficient, k, varies with temperature, approximately in accordance with the following equation:

$$k_T = k_{20}/\theta^{(20 - T)}$$

where

k_T = reaction rate coefficient at T° C, $days^{-1}$

k_{20} = reaction rate coefficient at 20° C, $days^{-1}$

θ = a constant, with values of about 1.08 for facultative ponds and about 1.04 for aerobic ponds (11)

T = pond water temperature, °C

The k values also change appreciably with the value of the BOD loading per unit area. Wastewater pond studies, indicating the degree of variation in k with BOD loading, are shown in Table 10-2 (8) (12).

TABLE 10-1

BOD_5 TO BOD_u RATIO EFFECTS ON k VALUES

k (day^{-1})	Raw Wastewater BOD_5 to BOD_u
0.05	0.43
0.10	0.68
0.15	0.83
0.20	0.90
0.30	0.97

TABLE 10-2

EVALUATION OF k VALUES FOR THE FIELD LAGOONS AT FAYETTE, MISSOURI (8) (12)

Lagoon[1] No.	Influent BOD mg/l	Effluent BOD mg/l	Detention Time day	BOD Loading lb/acre/day	k_{20} day^{-1}
1	267	35	87	20	0.045
2	267	37	44	40	0.071
3	267	48	29	60	0.083
4	267	49	22	80	0.096
5	267	47	17	100	0.129

[1] All lagoons are 2.5 ft deep and 0.75 acre in area.

A common value for k at 68° F (20° C) for domestic wastewater is about 0.1 day^{-1}, when the loading is about 60 lb/acre/day (67 kg/ha · d) (6,725 $kg/km^2/day$).

The hydraulic flow characteristics must provide the conditions assumed for the particular kinetic theory utilized. Plug flow is achieved, if each particle travels through the pond at the same rate. This condition requires a design that provides perfect vertical and transverse mixing of the "plug" as it flows through the pond; that is, dead spaces and short circuiting must, to a large extent, be eliminated. With plug flow, the first order reaction idealized equation is (8):

$$L_e/L_i = 1/e^{kt} \text{ or } t = \ln (L_i/L_e)/k$$

where

L_e = effluent BOD, mg/l

L_i = influent BOD, mg/l

e = 2.71828

k = reaction rate coefficient, day^{-1}

t = actual detention time, day

ln = natural log or log to base e

Completely mixed flow, the opposite of pure plug flow, occurs if mixing is sufficient to create uniform characteristics throughout the pond. The idealized first order reaction equation for completely mixed flow is (8):

$$L_e/L_i = 1/(1 + kt) \text{ or } t = (L_i - L_e)/L_e k$$

Actually, the flow through most existing wastewater treatment ponds falls somewhere between ideal plug flow and ideal completely mixed flow, depending on pond configuration and hydraulic characteristics.

In many locations, where controlled intermittent discharge or complete containment is not practiced, additional treatment, after stabilization, for removal of algal and bacterial cells is necessary to meet consistently BOD, SS, or other effluent requirements before discharge (6). In the winter, algal activity diminishes, and low winter temperatures, particularly from the ice cover, have adverse effects on stabilization pond efficiency. Other biological activity will also diminish, and CH_4 fermentation is facultative or anaerobic ponds will practically cease. Sedimentation becomes the major treatment process remaining, when ponds are iced over. Even if the detention period is very long, bacterial metabolism, using dissolved BOD during periods of ice cover, is incomplete.

Controlled, intermittent discharge of well-clarified facultative pond effluents in Michigan and North Dakota indicates that secondary wastewater treatment standards can be met, if ponds are adequately constructed and operated (6). Sufficient capacity should be planned

for holding wastes without discharge for at least 6 months. The organic loadings generally are held to 20 to 25 lb BOD_5/acre/day (22 to 28 kg/ha·d) or less, in two or more cells, with a liquid depth of not more than 6 ft (1.8 m) in the primary cell(s) and 8 ft (2.4 m) in subsequent cells (6). During the late spring and again in the fall, when the algal growth rate is slow, pond contents are stabilized, and distinct thermal layers prevent mixing. Ponds may then be drawn down as long as the SS content meets effluent requirements (13). It has been found that 2- to 4-week discharge periods during April to May and October to November are satisfactory (13). The SS content will normally be higher than the BOD_5 and, therefore, can be used as the control (14). This controlled intermittent discharge system is less practical in the south, where algal growth is prevalent more than 6 months per year, and in areas where there is a large amount of rainfall and infiltration into sewer systems (14). For more detail on intermittent discharge pond systems, see references (6), (13), and (14).

Complete containment (retention) may be practiced if the combined evaporation and percolation outflow rates are equal to, or more than, the rainfall and wastewater inflow. The complete containment system is usually feasible only in the drier parts of the western plains and desert regions. These systems should be located well away and downwind from habitations, and the pond designed, constructed, and operated to prevent conditions that might lead to fly, mosquito, and odor nuisances.

10.3.2 Design Data Requirements

Factors to be considered in determining whether a pond system might be a feasible part of the treatment system for a specific wastewater include:

1. Availability and value of suitable land at the potential treatment plant site
2. Environmental compatibility of a pond with neighboring land uses
3. Effluent quality requirements
4. Wastewater characteristics

To verify whether these four factors can be met, the following should be obtained:

1. Topographical maps, with contours adequately defining the topography of possible pond sites (latitude and elevation above sea level should be included)
2. Locations of all residents, commercial developments, and water supplies within 0.5 mile
3. Meteorological statistics (daily and monthly variations in temperature, wind direction, and wind velocity, and monthly values of precipitation, evaporation, and solar radiation)
4. Surface and subsurface soil characteristics (including percolation rates, load bearing capability, and ground water elevations)
5. Analyses of the wastewater to be treated, including DO, BOD_5 (total and filtered), BOD_u, COD, TS, TSS, TKN, total P, pH, alkalinity, sulfates and sulfides, and essential growth factors, such as iron and potassium
6. Data from at least 1 year's performance of a similar pond in a comparable environment, a pilot pond using the wastewater to be treated, or a portion of the

initial pond construction (refer to Section 10.4.5), to assist in developing design criteria, including pertinent reaction rate coefficients

10.4 Facultative Pond Design

10.4.1 General Considerations

Facultative pond system configurations vary (see Figure 10-3). However, in general, it has been shown that series configurations B, D, or E are most efficient. The initial or primary cell is designed to retain the more easily settleable SS, and the series cells following are designed to decrease both the BOD_5 and the SS to less than 30 mg/l and the fecal coliforms to less than 200 per 100 ml, while keeping the pH between 6 and 9.

Empirical methods have been developed for designing facultative ponds, but predicted effluent quality often differs from actual effluent quality, sometimes substantially. Comprehensive and uniform collection of data from well-designed and operated facilities across the United States is needed to develop better and more reliable design procedures. Various State standards for stabilization pond design have often been made quite conservative to compensate for the many relatively unknown design and operational variables that often result in unsatisfactory operation.

Most of the SS settle out rapidly near the inlet of a primary cell, reducing the actual BOD loading on the pond by 20 to 30 percent (5). However, some of the settled BOD is reimposed on the pond by the O_2 demand in the gases (largely methane, ammonia, and sulfide) rising from the anaerobically digesting settled solids, which offsets to some extent any settling of coagulated dissolved solids in the primary cell. Additional depth should be provided in primary cell(s) for settled solids, both for anaerobic digestion and for storage. This additional depth normally should be no greater than about 6 ft (1.8 m). It has been recommended that concentric baffles be placed around the inlet, in the middle of the sludge storage area. These baffles should extend from 1 ft (0.3 m) above the cell bottom to about 4 in. (0.1 m) from the minimum operating water level (15), to keep wind action from mixing O_2 into the anaerobic layer and stopping CH_4 fermentation.

In stabilizing the sludge, gases are given off that return some BOD to the overlying waters during warmer weather, and also help to keep pond water mixed.

In hot weather, facultative pond water depths (exclusive of sludge storage) should be maintained between 3 and 5 ft (0.9 and 1.5 m) to control weed growth and improve odor control. In areas where icing occurs, additional depth must be allowed for wastewater storage for periods in which ice cover, ice breakup, or thermal overturn prevents the effluent (in the absence of polishing processes) from meeting quality requirements. Operating depths, in general, can vary, depending on local conditions, as indicated in Table 10-3.

The primary biological reactions occurring in a facultative pond are bacterial synthesis of new cells (symbiotically with algal photosynthesis), followed by bacterial and algal endogenous respiration. Bacteria utilize reduced organic compounds as substrates; algae utilize

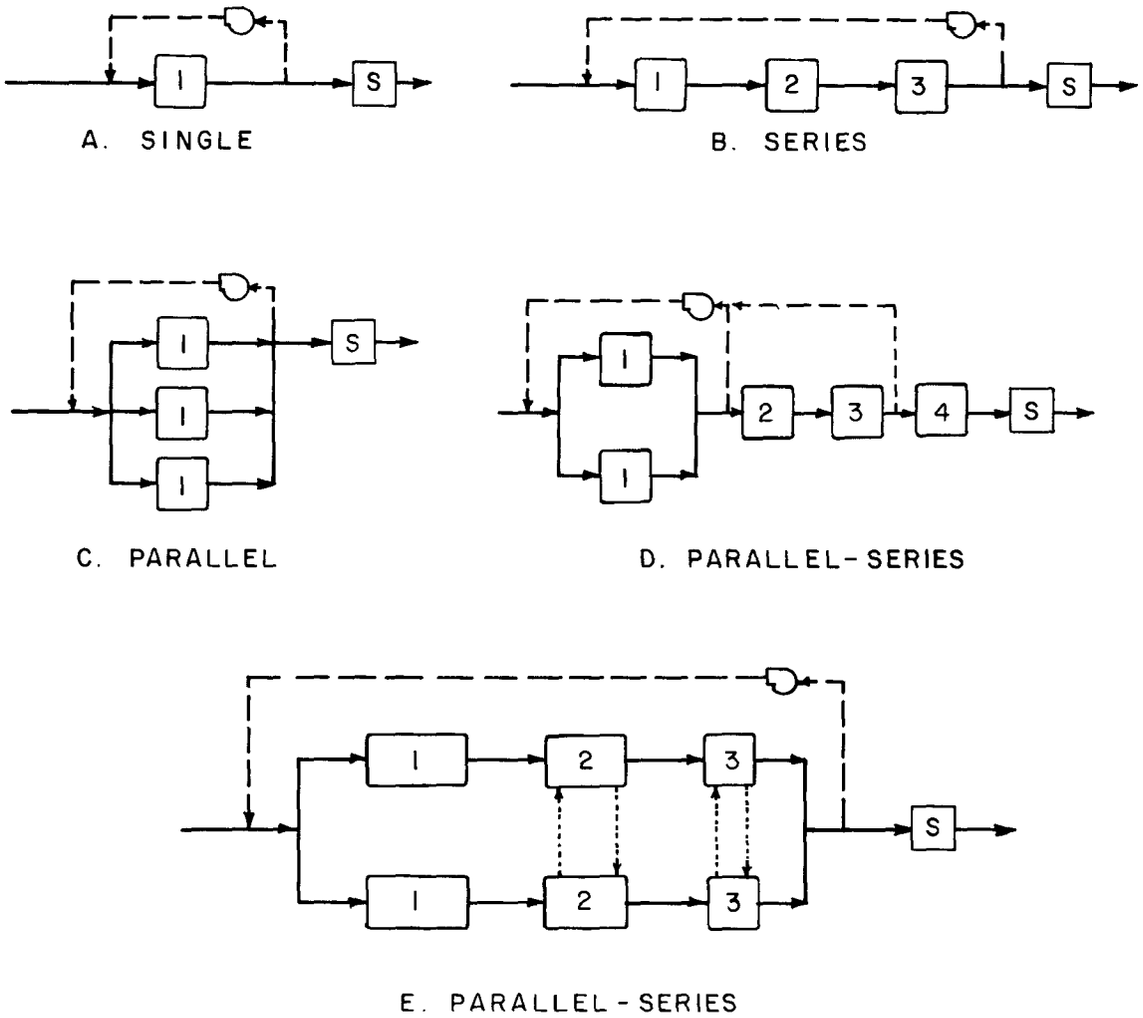

LEGEND

1,2,3,4 NO OF UNIT IN SERIES

CELL IN POND SYSTEM

NORMAL FLOW

POSSIBLE RECIRCULATION

RECIRCULATION PUMP

S SOLIDS REMOVAL UNIT

FIGURE 10-3

FACULTATIVE POND SYSTEM CONFIGURATIONS

TABLE 10-3

RECOMMENDED DESIGN CRITERIA
FACULTATIVE WASTEWATER TREATMENT PONDS

	Average winter air temperature		
	Above 59° F (15° C)	33° F to 59° F (0° C to 15° C)	Below 33° F (0° C)
Total System			
Influent BOD_5, lb/acre/day	40 to 80	20 to 40	10 to 20
Operating Depth, ft	3 to 5	4 to 6	5 to 7
Total Retention Time, days[1]	25 to 40	40 to 60	80 to 180
Initial Cell of Multi-cell System			
Sludge Storage Section, Extra Depth, ft	2 to 4	3 to 5	4 to 6
Sludge Detention, years	5 to 10	5 to 10	5 to 10
Depth Above Sludge Storage, ft	3 to 5	4 to 6	5 to 7
Retention Time, days	5 to 15	15 to 30	30 to 80
BOD_5, lb/acre/day	120 to 180	60 to 120	30 to 60

[1]In locations where ice forms, consideration should be given to making detention time in the ponds 150 to 240 days, or sufficient for the period of ice cover plus 60 days, unless other means are provided to prevent odor and to polish the pond effluent. If strong winds (which prevent good sedimentation) frequently occur, the orientation of the long dimensions of the pond should be about 90° to the prevailing strong wind direction, wind breaks should be provided, and/or retention times increased.

inorganic compounds for synthesis of new cells. A secondary biological action is the consumption of microscopic bacteria and algae by macroscopic protozoa, rotifers, and crustaceans.

The micro-organism growth rate is also dependent on the food-to-micro-organism ratio (F/M). The byproducts of biochemical actions caused by the exoenzymes of some micro-organisms are food for other biota. All essential nutrients must be balanced, which sometimes requires additions of one or more nutrients to insure the most efficient treatment. Mixing in the aerobic zone and in the anaerobic zone of the primary cell(s) tends to maintain the balanced population of organisms that most efficiently and rapidly stabilizes the waste organic material.

For construction grant participation, the U.S. EPA currently requires that a series of at least three cells be provided for flow-through ponds, with the initial cell sized to prevent anaerobic conditions near the surface. The applicant must also agree to provide positive disinfection, if natural pathogen removal does not meet effluent requirements (6).

In ponds receiving settled wastewater, those with flows approximating plug flow have proved to be more efficient than those with completely mixed or nonideal flow in the removal of BOD, SS, and pathogens (4) (8). To achieve plug flow, transverse end-around baffles, creating **length-to-width ratios** of up to 25 to 1 (from inlet to outlet), depending on the depth and width, have proved to be highly efficient (9). The optimum length-to-width ratio can be obtained using dye-diffusion tests in pilot plants or existing installations (8) (9). General criteria currently in use for the design of facultative wastewater treatment ponds (if more specific data for the wastewater to be treated are unavailable) are given in Table 10-3. To insure less than 30 mg/l of SS in continuous discharge pond effluent, it may be necessary to increase the detention times or to add further solids removal, using processes such as intermittent sand filters (16), rock filters (17), or chemical coagulation with sedimentation or flotation and/or filtration (18).

Influent BOD can be synthesized into new cells in 1 to 3 days in the summer and 8 to 10 days in the winter, if there is continuous mixing of the pond's upper layers and adequate DO for metabolism (15). Endogenous respiration proceeds very slowly; thus, relatively complete stabilization of the organic matter (including lysed dead cells) in well-mixed, aerated wastewater will take more than 20 days, if the water temperatures are above 68° F (20° C) and up to 80 days, if the water temperature is near 33° F (0° C), and then only if adequate mixing and DO are present (15).

Studies indicate that the data in Table 10-4 apply, in general, to facultative wastewater treatment ponds treating domestic wastewater with pond water at 68° F (20° C) and influent containing 200 mg/l BOD_5 (19):

TABLE 10-4

BIOLOGICAL ACTIVITY DATA FOR PONDS

	Bacteria		Algae	
	Cell Synthesis	Endogenous Respiration	Cell Synthesis	Endogenous Respiration
Retention Time, days	1 to 2			90 to 160[1]
Oxygen Required, mg/l	112	150		183
Net Oxygen Produced, mg/l			229	
VSS Produced, mg/l	154		187	
Inert Organic Solids Produced, mg/l		30		37
Inorganic SS, mg/l		15		
NH_3-N Released, mg/l		13		16
CO_2 Released, mg/l	108	206		
Empirical Organic Formula	$C_5H_9O_3N$		$C_5H_9O_3N$	
Oxygen Released From Alkalinity By Algae During Synthesis, if 300 mg/l of Alkalinity Present, mg/l			96	

[1] Depending on the rate of sedimentation of cells.

10.4.2 Process Design of Facultative Ponds

Because the process and hydraulic designs of facultative ponds are interdependent, the first step is to determine whether the pond will be flow-through, controlled discharge, or complete retention. This selection can be based on the discussions in Section 10.3.1, which recommend complete retention ponds only for drier, desertlike regions and controlled discharge for those regions with definite seasonal change in climate accompanied by a cold winter, which suspends algal growth. The second step in process design is to determine optimum pond configuration (including possible baffles and recirculation) and operating depths, exclusive of freeboard, sludge storage, and ice storage.

It is not necessary to complete the synthesis and endogenous respiration processes in the initial cell(s) of a facultative pond system, as long as most of the settleable solids are removed.

Desirable objectives for the design of the initial cell(s) of a multicell series facultative pond system are:

1. Removal of the maximum amount of SS
2. Establishment of 5- to 10-year sludge storage capacity
3. Maintenance of at least 1.0 mg/l of DO in the upper 2 to 3 ft of the pond

Most of the settleable solids in the raw wastewater will be removed in the first few hours. Biochemical action will cause precipitation of additional solids which, with the cellular material synthesized from the organic material in raw wastewater, will also form settleable floc with SS and colloidal solids.

For design purposes, the amount of solids settled can be approximated by the equivalent of the SS in the influent. These settled solids may include 20 to 40 percent of the initial BOD_5.

To obtain a 5- to 10-year sludge storage capacity, the designer may assume that the sludge compacts to about 6 percent dry solids. The maximum sludge storage depth should be no more than about 6 ft (1.8 m). The sludge storage requirement establishes the minimum area in the primary cells(s) and, in turn, the minimum hydraulic retention time.

The major oxygen source available to the initial cell(s) to satisfy BOD is algal photosynthesis, with small amounts of DO resulting from air dissolving into the water at the air-water interface.

The oxygen available from solar radiation can be approximated by the following equation (15) (20):

$$Y_o \cong 0.5\ S_{min}$$

where

Y_o = oxygen yield, lb O_2/acre/day (Kg/ha/day)

S_{min} = solar radiation for the month with the least solar radiation, cal/cm^2/day (see Table 10-5).

TABLE 10-5

APPROXIMATE VALUES[1] OF SOLAR ENERGY (21)

Latitude		Month											
N	Degree or S	Jan.	Feb.	Mar.	Apr.	May	Jun.	Jul.	Aug.	Sep.	Oct.	Nov.	Dec.
	0 max	255	266	271	266	249	236	238	252	269	265	256	253
	min	210	219	206	188	182	103	137	167	207	203	202	195
	10 max	223	244	264	271	270	262	265	266	266	248	228	225
	min	179	184	193	183	192	129	158	176	196	181	176	162
	20 max	183	213	246	271	284	284	282	272	252	224	190	182
	min	134	140	168	170	194	148	172	177	176	150	138	120
	30 max	136	176	218	261	290	296	289	271	231	192	148	126
	min	76	96	134	151	184	163	178	166	147	113	90	70
	40 max	80	130	181	181	286	298	288	258	203	152	95	66
	min	30	53	95	125	162	173	172	147	112	72	42	24
	50 max	28	70	141	210	271	297	180	236	166	100	40	26
	min	10	19	58	97	144	176	155	125	73	40	15	7
	60 max	7	32	107	176	249	294	268	205	126	43	10	5
	min	2	4	33	79	132	174	144	100	38	26	3	1

[1]Solar radiation (S), cal/cm^2/day (x 0.049 = W/m^2)

For design purposes, the BOD_5 loading on the initial cell(s) should be restricted to the oxygen yield, as expressed in the above formula.

The oxygen available from surface transfer varies with the thickness of the liquid film at the air-liquid interface. Surfactants, greases and oils, and wind action (which causes turbulence at the surface) have a significant effect on the rate at which O_2 diffuses through the film into the water. The maximum rate in a year may be on the order of 1,000 times the minimum rate. Therefore, unless there is going to be an appreciable breeze every day, the oxygen transferred through the surface is ignored at this time.

The initial cell(s) of a multicell pond system should be designed as completely (relatively) mixed unit(s), depending on inlet velocities, gaseous products from anaerobic decomposition, surface winds, and thermal currents for mixing in the aerobic zones. The mixed flow in the primary cell(s) may be approximated by the following idealized, previously stated, first-order reaction equation:

$$t = (L_i - L_e)\ Lk$$

The initial cell(s) should be designed so that they can be loaded individually, in series, or in parallel. Thus, one unit can perform alone at startup or during sludge removal, and later, as the load increases, be used in either series or parallel operation. Primary cells should be nearly square in configuration to insure an even BOD loading and deposit of sludge.

To prevent possible odor problems (which may occur after spring thaws, overloading the summer oxygen resources, or during thermal turnovers), recirculation of well-aerated effluent from subsequent cells to the primary cells may be provided to add DO and reduce the BOD load on the primary cell(s) in a series of cells. Such recirculation of seed alga also reduces the possibility of major reductions in algal synthesis and oxygen production by toxic loadings or by maco-organisms that prey on the more desirable algae.

The effluent from the primary cell(s) should pass through a minimum of two, and preferably more, additional cell(s) in series, with length-to-width ratios in each cell as large as possible (up to about 25, when using baffles), keeping the width no less than twice the maximum operating depth (8).

If the quality of the effluent is limited only to requirements for removal of BOD, SS, and pathogens (and not nitrification), the k value can be determined in a pilot plant, using BOD_5 in the determinations, particularly if the pond system effluent is to be polished before discharge. If tertiary SS removal is planned, ponds subsequent to the initial pond(s) only require detention time sufficient to complete the synthesis of the raw wastewater BOD organics to microbial cells. Conversely, endogenous respiration should be relatively complete, if the pond system effluent is to be discharged without further treatment. Time required for this more complete stabilization, as stated in Section 10.4.1, will be over 20 days under the best conditions (when the water temperature is over 20° C), and up to 80 days when the temperature is near 0° C—and only if proper conditions exist for the removal of algal and bacterial cells throughout the system.

The necessary retention time can be estimated for the remaining ponds arranged in series, utilizing the previously stated idealized plug flow equation:

$$t = \ln (L_i/L_e)/k$$

10.4.3 Hydraulic and Physical Design of Facultative Ponds

A well-designed facultative pond should minimize upsets, maintenance, and nuisances and maximize operational flexibility, stability, and BOD and SS removal. Hydraulic and physical

design features that should be considered include hydraulic retention time, configuration, recirculation, feed and withdrawal variations, pond transfer inlets and outlets, dike construction, baffles, bank protection, and algae removal.

10.4.3.1 Hydraulic Retention Time

The actual minimum hydraulic retention time in overflowing ponds varies with the degree of mixing (or short circuiting) and the rates of rainfall, evaporation, and percolation. Winds, causing intense mixing and short circuiting, in conjunction with high rates of rainfall or ground water inflow, tend to decrease the actual detention time, while a high rate of evaporation and percolation tends to increase the actual minimum hydraulic detention time in the pond. Wind effects can be controlled, to some extent, by orienting the ponds so that the longer dimension is in the direction of the prevailing wind (with the flow direction opposite that of the wind if mixing is desirable) and at 90° if mixing is not desired. Wind barriers, either artificial (snow fence or rigid baffle types) or natural (evergreens), may also be used to modify the effects of the wind.

A high water table will generally reduce percolation (if wastewater will not adversely affect the ground water), or impermeable barriers on the pond bottoms may be used to decrease percolation. In sandy soils, the percolation rate must often be reduced to insure protection of ground water. The percolation test for ponds is different from that for septic tank drainage fields, because a constant hydraulic head is available at the ponds. For percolation test procedures, see reference (22).

10.4.3.2 Configurations

Basic configurations of pond cells are shown in Figure 10-3. The actual shapes will, of course, vary with the site, the quality and quantity of wastewater, and the climatic conditions expected.

Single-cell ponds are not as efficient as multicell series ponds in reducing algal and bacterial concentrations, color, and turbidity (15) (23). At least three, and preferably four to six, series cells should be used (15). The pond system should be designed to allow any one cell to be taken out of operation for cleaning and to allow parallel flow through the first cells (where sludge deposits must be occasionally removed), followed by series flow through the remaining cells.

The parallel configuration more effectively reduces pond loadings and is less likely to produce odors in the initial cells. The first cell of the series configuration is more likely to be overloaded and to produce odors. On the other hand, the series configuration is more likely to have a lower concentration of SS, BOD, and coliforms in the effluent of the last cell in the series. The primary cell(s) of a series system must be designed for provision of sufficient oxygen to satisfy the nonsettleable BOD requirements and the benthos BOD requirements.

10.4.3.3 Recirculation

Recirculation refers to intercell and intracell recirculation, rather than to mechanical mixing in the pond cell. Intercell recirculation occurs when the effluent from a downstream cell is mixed with the influent to an upstream cell. Intracell recirculation occurs when part of the effluent from a pond cell is mixed with the influent to the same cell. Both methods return active algal cells to the feed area, to provide additional photosynthetic oxygen production capacity to help satisfy the organic load. Intracell recirculation provides some of the advantages of a completely mixed environment. Intercell recirculation dilutes the influent to a cell with an aerated, lower BOD effluent and, therefore, helps prevent odors and anaerobic conditions in the feed zone of that cell.

Both intercell and intracell recirculation can reduce stratification and thus produce some of the benefits ascribed to pond mixing. Pond recirculation is not generally as efficient as are mechanical or diffusion aeration systems in mixing facultative ponds. However, increased mixing by aeration can also increase the rate of heat loss (which reduces the water temperature and, in turn, the rate of biological activity) and may interfere with anaerobic methane fermentation by introducing oxygen into the bottom sediment.

Some of the more common intrapond and interpond recirculation patterns are illustrated in Figure 10-3.

An advantage of intercell recirculation is that the BOD concentration in the mixture entering the pond system can be reduced as follows:

$$L_m = \frac{L_i + rL_e}{(1 + r)}$$

where

L_m = BOD_5 of mixture, mg/l

L_e = effluent BOD_5 from last cell, mg/l

L_i = influent BOD_5, mg/l

$r = R/q = \frac{\text{recycle flow rate}}{\text{influent flow rate}}$ = recycle ratio

By use of recirculation, the organic load can be applied more evenly throughout the cells, and organic loading and odor generation near the feed points are minimal.

One disadvantage of intercell recirculation is that the retention time of the liquid in each cell is reduced. The hydraulic retention time of the influent and recycled liquid in the first, most heavily loaded cell in the series system is (24):

$$t = \frac{v}{(1 + r)q}$$

where

t = retention time, days

v = volume in primary cell, ft^3

q = influent flow rate, ft^3/day

r = recycle ratio

Recirculation may be accomplished with high volume, low head propeller pumps; nonclog, self-priming centrifugal pumps; Archimedes screw-type pumps; or air lift pumps. Reference (24) contains a simplified cross section of a propeller pump installation.

Interpond recirculation systems may provide for recycle rates of up to eight times the average design flow rate (25). Because of the higher recycle rates, a means for thorough mixing before introduction to the cell is necessary. This mixing can take place in a manhole. Interpond recirculation should ordinarily be from the effluent of the next-to-last series cell to the influent of the primary cell.

The cost and maintenance problems associated with large discharge flap gates can be eliminated by a siphon discharge. An auxiliary pump with an air eductor can be used to maintain the siphon. Siphon breaks should be provided to insure positive backflow protection. Pumping stations should be designed to maintain full capacity with minimal increase in horsepower, even if the inlet and discharge surface levels fluctuate over a 3- to 4-ft (0.9 to 1.2 m) range. Multiple and/or variable speed pumps can be used to adjust the recirculation rate to seasonal load changes.

10.4.3.4 Inlets, Outlets, and Short Circuiting

In a California study of short circuiting (26), it was found that some particle detention times were as low as 1 percent of the calculated time and mean detention times could be 10 percent of the calculated time. Other studies using dyes in stabilization lagoons in South Africa confirmed that actual particle detention times, using customary designs, often were less than 1 percent of design time (26). Short circuiting was found to be as much the result of thermal stratification as of inadequate inlet-outlet design.

Pond configuration should allow full use of the wetted pond area. Transfer inlets and outlets should be located to eliminate dead spots where scum can accumulate and any short circuiting that may be detrimental to photosynthetic processes. Pond size need not be limited, as long as proper distribution is maintained by baffling or dikes.

A single feed pipe and inlet near the center of the pond and a single exit have been commonly used since the 1920's, particularly for raw wastewater ponds. However, this usually results in short circuiting and inconsistent removals of BOD and SS.

The locations and types of inlets and baffles used within each pond can have a major effect in controlling short circuiting. Typical arrangements are shown in Figure 10-4. To prevent clogging, single inlets should only be used in the primary cell(s) of a multicell series pond system treating raw wastewater. They should be located over the deepest part of the sludge storage area, at a point 8 to 12 in. (0.2 to 0.3 m) above the expected final sludge storage level and directed vertically upward. In larger primary cells, several inlets, instead of one, will assist in uniformly dispersing the sludge deposits and the flow. Inlets in primary cells should discharge vertically, at a point near the top of the sludge storage area. Neither the inlet pipe nor the nozzles should be less than 4 in. (0.1 m) in diameter, to prevent plugging, and should be provided with flushing connections.

Multiple inlets can be achieved by placing an inlet pipe that has multiple ports or nozzles pointing at an angle slightly above the horizontal on one side of a pond cell. The nozzle head losses should be about 1.0 ft (0.3 m) each, to obtain good mixing velocity and to reduce thermal current short circuiting.

If intermittent discharge is desired, it is necessary to design the pond cell outlets so that the cell water levels can rise several feet while storing wastewaters (as shown in Figure 10-4). This design requires one or more of the following:

1. Placing one or more manholes, with adjustable height weirs, in the intercell transfer pipe or transfer channel, to control water levels in the preceding cell.
2. Placing a transverse pipe header, with multiple risers 1.0 to 2.0 ft (0.3 to 0.6 m) above the bottom, to eliminate the need for a sludge baffle and to reduce the need for a scum baffle. The risers should be in the form of reducers, to create a small velocity of about 0.5 ft/sec (0.15 m/s) within the neck of the riser as the flow reaches the header, to insure an evenly distributed flow. An alternative method of creating a multiple outlet, which can be used independently or in conjunction with the first method, is a baffle wall with orifices. The velocity through the orifices in the baffles or into the mouth of the risers should not exceed about 0.1 ft/sec (0.03 m/s), to prevent resuspension of settled solids or the displacement of algae from the water surface.
3. If icing is not a problem, using a combination of scum (or floating algae) baffles extending from above high water to 6 in. (0.15 m) below low water, a bottom sediment barrier from the bottom up 1.0 to 2.0 ft (0.3 to 0.6 m), and an outlet or series of outlets also located from 1.0 to 2.0 ft (0.3 to 0.6 m) above the bottom. If ice is a problem, such scum baffles should be removable for the period of ice cover. Such scum baffles can be floating and anchored in place.

To obtain maximum removal of microbial cells by settling, the quiescent area near an outlet must be designed to attain a surface overflow rate during peak flows of less than about 800 gpd/ft^2 (32 m^3/m^2·d). The velocities over the area surrounding the outlet should be

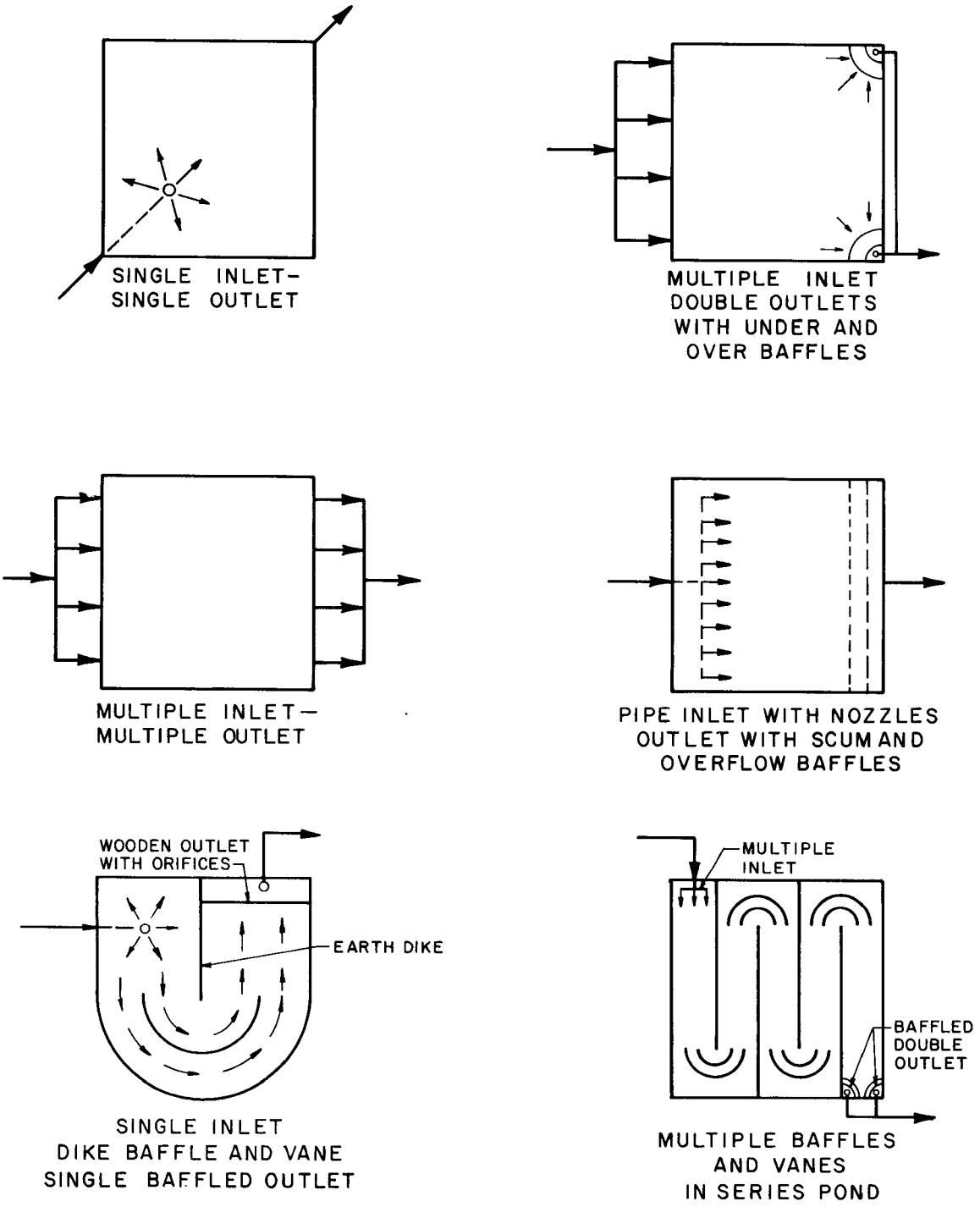

FIGURE 10-4

INLETS, OUTLETS, AND BAFFLE ARRANGEMENTS

less than about 4 to 5 ft/min (0.02 to 0.025 m/s), to prevent scour of settled algal and bacterial cells, which have about the same density as water. Because winds cause most of the turbulence, the outlet of the scum baffles should be relatively rigid, to absorb the shocks of waves and not pass them on. It may be necessary to place one or more wind baffles, in addition to the scum baffle, to obtain sufficient quiescence for the algae to either float or settle to the bottom. This latter can be achieved by sludge baffles, such as shown on Figure 10-5, placed around the outlet at a distance sufficient to keep the flow over the baffle at reduced velocity.

To reduce short circuiting in large cells, dikes or baffles, as shown in the bottom plans of Figure 10-4, may be constructed to channel the flow. Extensive research has indicated that, where feasible, placing parallel baffles in cells for end-around flow will decrease short circuiting and improve efficiency (8).

If the pond system is quite small, barrier walls with a few orifices (creating enough head loss to insure uniform distribution), instead of dikes, can be used to divide a single-cell pond into three or more separate cells for better BOD, SS, and coliform removal. Barrier walls in northern areas must be designed to accommodate rising and falling ice cover without damage (or be removable) and to permit storage for intermittent discharge, if that is an advantage.

Pond and channel dikes usually can be constructed with side slopes between 6 horizontal to 1 vertical and 2 horizontal to 1 vertical. The final slope selected will depend on the dike material and the bank erosion protection to be provided. All soils, regardless of slope, will require some type of protection in zones subject to wave action, hydraulic turbulence, or aerator agitation (for example, around the discharge areas at the recirculation pumping station and areas around the influent and effluent connections). If the wind is primarily in one direction, wave protection can usually be limited to those areas receiving the full force of the waves. For small pond cells, protection should always extend vertically from at least 1 ft (0.3 m) below the minimum water surface to at least 2 ft (0.6 m) above the maximum water surface. Protection against hydraulic turbulence should extend several feet beyond the area subject to such turbulence. Protective material should not impede the control of aquatic plant growth. Under all circumstances, dikes should be a minimum of 1 ft (0.3 m) vertically above maximum wave-induced high water.

Typical design details currently in use are presented in references (8), (9), (15), (23), (24), (26), (27), and (28). Only designs that insure that the effluent will consistently meet State and Federal requirements should be chosen, taking into consideration the quality of control, operation, and maintenance that can be expected.

10.4.3.5 Designing for Good Maintenance

All types of slope protection, such as grass, asphalt, or crushed rock, require regular maintenance and at least semiannual rehabilitation. Odor problems result when scum and sludge build up at the edge of ponds in weeds, tall grass, or crushed rock. Grass sod and asphalt provide the easiest-to-clean slope protection and are odor free when well maintained. The

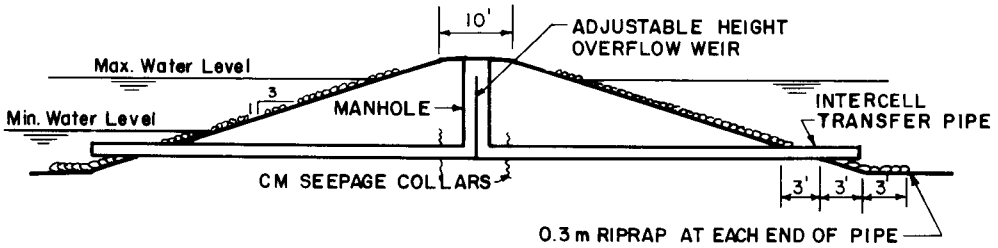

SIMPLE DIKE CROSS SECTION AT TRANSFER PIPE WHERE INTERMITTENT DISCHARGE REQUIRED

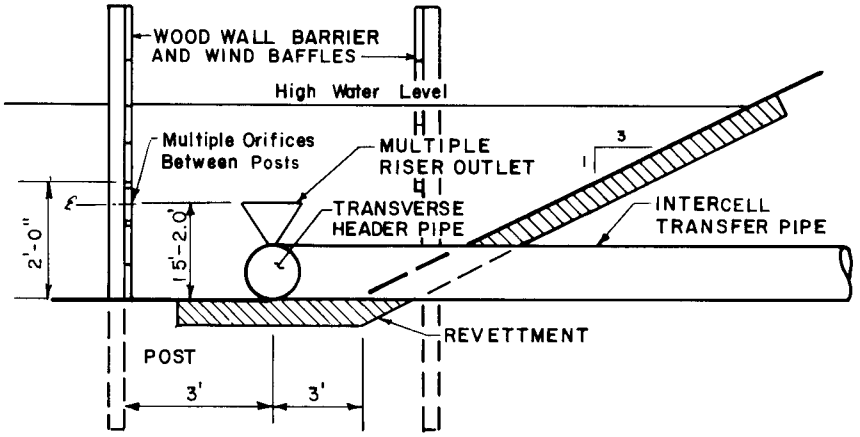

BAFFLED MULTIPLE OUTLET USING HEADER PIPE

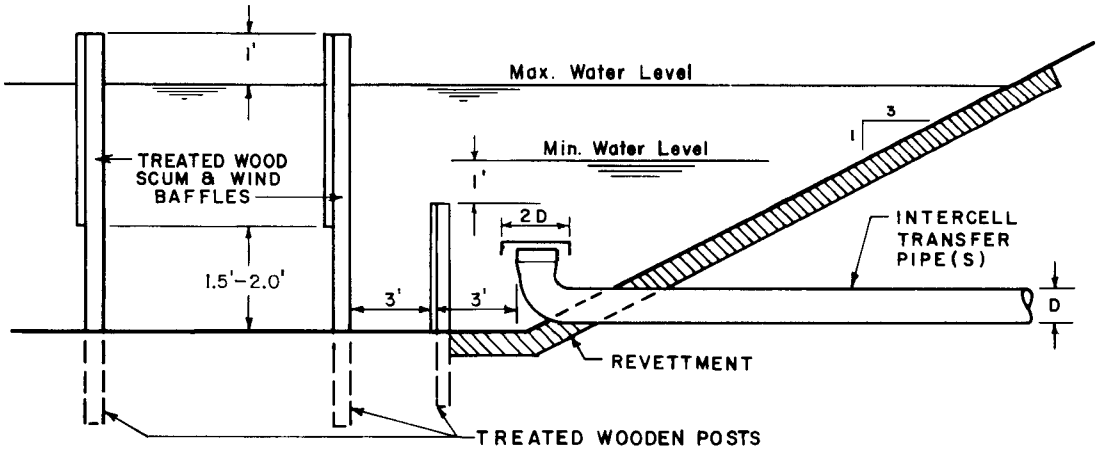

SCUM AND SLUDGE BAFFLES IN FRONT OF MULTIPLE TRANSFER PIPE OUTLETS

FIGURE 10-5

DIKE AND OUTLET DESIGN DETAILS

tops of the dikes should be at least wide enough for a 10-ft (3 m) all weather gravel road. Such a road is essential for pond inspection and for the control of insects, erosion, and plant growth on the dike surfaces. Because a boat is essential to maintenance, a boat ramp with paved surfacing at one corner of each pond is helpful. The boat ramp(s) should be placed downwind, where algae and floating debris might collect, to assist in the removal of the floating solids. Proper levee maintenance can be an important aid in controlling shoreline problems.

Without maintenance and good design, aquatic growths may develop in ponds. Pond depths greater than 3 ft (0.9 m) will discourage rooted growths. If not suitably controlled, plants can choke off hydraulic operation and create large accumulations of floatable debris. Such debris usually becomes septic and creates odors and conditions detrimental to photosynthetic activity.

In addition to regular outlets, provisions must be made for overflows as an alternative method of drainage, in the event outlets become plugged, and for maintenance. The overflow unit can be simply an intercell connecting pipe flowing through a manhole divided by an adjustable weir. Submerged overflow units must be periodically operated to insure that they are clean.

Provisions for stormwater and high ground water must also be included. All streams and expected runoff must be diverted around or piped under the pond system. Pond dikes must be above any expected flood levels.

10.4.4 Belding, Michigan, Intermittent Discharge Pond System

Studies on the performance of the five-cell waste stabilization pond system at Belding, Michigan, indicate that intermittent discharge can produce an effluent meeting secondary treatment standards (13). Belding, with a population of 4,000 and several light industries, has a collection system subject to infiltration. The primary cell is small, only large enough to remove settleable solids, and functions as an anaerobic pond. The remaining four ponds, which operate in series, have areas of 20, 25, 7.5, and 7.5 acres (8, 6, 3 and 3 ha), respectively. The cells of this multicell system were designed to meet the Great Lakes-Upper Mississippi River *Recommended Standards for Sewage Works* (29). Table 10-6 lists the characteristics of the cell influents and effluents.

10.4.5 Example Computations

An example of the design computations for a facultative pond system that will consistently meet secondary treatment standards, given that the minimum average daily water temperature is about 5° C (35° F) and ice cover is not a problem, is presented below:

Site Data:

Latitude	35° N.	
Influent BOD, mg/l	200	(L_i)
Influent SS, mg/l	250	(S_s)

TABLE 10-6

BELDING, MICHIGAN INTERMITTENT DISCHARGE POND SYSTEM (13)

Quality of Contents of Five Lagoons Operated in Series at Belding, Michigan

Analysis	Influent Raw Wastewater	Eff. from Pond No. 1	Eff. from Pond No. 2	Eff. from Pond No. 3	Eff. from Pond No. 4	Eff. from Pond No.5
DO, mg/l	0.0	0.0	27.8	11.2	5.0	10.8
NH_3-N, mg/l	34.6	27.3	2.7	0.4	0.6	0.5
NO_3-N, mg/l	0.16	0.2	0.44	0.5	0.19	0.08
pH	7.1	7.3	8.6	8.6	8.0	8.6
Total P, mg/l	12.5	9.9	3.0	2.5	4.4	2.9
OrthoP, mg/l	10	7.8	1.6	2.0	3.4	2.3
SS, mg/l	121	76	146	31	17	22

Effluent quality–Pond No. 5, Late Fall and Winter Discharge

Date	DO mg/l	BOD_5 mg/l	Suspended Solids mg/l	NH_3-N mg/l	NO_3-N mg/l	Total P mg/l	Total Coli No./100 ml
1973							
11-5	10.5	3.0	52	2.4	0.35	2.7	–
11-7	10.7	8.9	60	5.58	0.33	3.9	–
11-13	10.8	10.3	102	5.58	0.41	3.9	–
11-20	9.7	9.4	78	5.82	1.1	3.9	–
11-22	10.0	8.7	52	5.22	0.97	3.5	–
Total Discharge–57.6 Million Gallons							
1974							
1-15	9.7	7.2	9.5	5.7	0.82	3.4	–
1-18	10.9	1.4	11	5.96	0.66	3.6	–
1-22	8.2	5.4	13.5	7.4	0.22	4.0	–
1-25	5.0	1.2	12.5	9.0	0.16	4.4	–
1-29	10.5	2.4	30	10.8	0.15	5.1	–
Total Discharge–Approximately 38 Million Gallons							
4-26	17.5	6.7	53	3.3	1.1	2.8	–
4-29	12.0	10.5	30	3.5	1.0	2.9	<100
5-1	10.7	7.8	16	2.6	1.3	3.0	<100
5-6	9.4	8.9	23	1.0	1.4	3.2	1,800
5-7	10.0	9.8	12	0.75	1.5	2.8	–
5-8	10.3	7.0	16	0.8	1.4	2.7	5,500
5-13	9.6	9.1	27	0.1	1.0	2.5	<100
Normal Daily Flow–No Retention							

Flow (including infiltration), gpcd	100	(q)
Population	2,000	(N)
Precipitation, in./yr	35	(900 mm/yr)
Evaporation, in./yr	35	(900 mm/yr)
Minimum Water Temperature, °C	5	(T_m)
Effluent BOD_5, mg/l	<30	(L_e)
Effluent SS, mg/l	<30	(S_e)

Because BOD_5 does not include about one-third of the carbonaceous BOD, nor a significant portion of the nitrogenous BOD, it is assumed that this additional BOD can be absorbed by the receiving waters without damage.

Assumptions

1. Flow-through system
2. Configuration: two parallel primary cells, followed by three cells in series (see Figure 10-6A)
3. Recirculation: up to 400 percent recirculation of second-series cell effluent to primary effluent
4. Additional treatment: chlorination facilities only for initial design, pending results of 1 year of operation of pilot plant, placed in one of the primary cells
5. Reaction rate coefficient: pending results of 1 year of operation, assume k_{20} might vary from 0.15 to 0.10

1. *Primary Cell Design*

Two primary cells in parallel. The volume of daily flow is:

$$Q = (2{,}000 \text{ persons})(100 \text{ gpcd}) = 200{,}000 \text{ gpd } (800 \text{ m}^3/\text{day})$$

$$V = (200{,}000 \text{ gpd})/(7.48 \text{ gal/ft}^3) = 26{,}800 \text{ ft}^3/\text{day } (784 \text{ m}^3/\text{day})$$

Assuming that after 5 years the equivalent of 100 percent of the SS compacted to 6 percent dry solids, the sludge storage volume needed would be:

$$V = \frac{(250 \text{ mg/l})(8.33 \text{ lb}/10^6 \text{ gal/mg/l})(0.2 \text{ mgd})(1{,}825 \text{ days})}{(63 \text{ lb/ft}^3)(0.06)}$$

$$= 201{,}088 \text{ ft}^3 \ (5{,}630.5 \text{ m}^2)$$

Assuming 3 ft (0.9 m) average depth, the area required is:

$$A = 201{,}088 \div 3 = 67{,}029 \text{ ft}^2 \ (6{,}166.7 \text{ m}^2) \text{ or } 1.5 \text{ acres } (0.6 \text{ ha})$$

Using two storage areas, the dimensions would be 185 ft × 185 ft (57.4 m × 57.4 m), with the bottom of the sludge storage sloped from 2 ft deep (0.6 m) at the edges to 5 ft deep (1.5 m) at the middle for each primary pond.

Assume that 1.5 times this sludge storage area is required in the primary units, with a 3-ft depth of wastewater above sludge storage. The detention time will be:

$$t = (201{,}088)(1.5)/26{,}800$$
$$= 11 \text{ days}$$

The BOD_5 loading per acre on the primary ponds should be restricted to one-half the minimum available solar energy. Half the minimum solar energy, at 35° N latitude, from Table 10-5, is equal to approximately one-half the average of the minimum solar energies at 30° N. and 40° N.:

$$L_{max} = (70 + 24)/(2)(2) = 23.5 \text{ lb } BOD_5/\text{acre } (26.3 \text{ kg/ha})$$

The maximum probable BOD_5 reduction would be obtained by using the plug flow formula. Assume 1) 20 percent of BOD_5 is removed within a few hours by settling, 2) t = 11 days, 3) $\theta = 1.08$, and 4) $k_{20} = 0.10$.

$$k_T = k_{20}/\theta^{(20-T)}$$
$$k_5 = 0.10/1.08^{(20-5)}$$
$$= 0.10/3.17$$
$$= 0.0315$$

$$L_e = L_i/e^{kt}$$
$$= (0.8)(200)/2.78^{(0.0315)(11)}$$
$$= 160/2.78^{0.35}$$
$$= 160/1.43$$
$$= 112$$

Maximum BOD_5 removal = (160 - 112)(8.33)(0.2 mgd)
= 80 lb/day (36.32 kg/day)

The minimum probable BOD_5 reduction would be obtained by using the complete mix formula. Assume 1) $L_i = 160$ mg/1, 2) t = 11, 3) $\theta = 1.08$, and 4) $k_{20} = 0.10$. Therefore:

$$k_5 = 0.0315$$
$$L_e = L_i/(1 + kt)$$
$$= 160/[1 + (0.0315)(11)]$$
$$= 160/1.35$$
$$= 119$$

Minimum BOD_5 removal = (160 - 119)(8.33)(0.2)
= 68 lb/day (30.87 kg/day)

Pending the results of the pilot plant study, assume the BOD_5 requirement is the average of the probable maximum and minimum BOD_5:

Average BOD_5 removed = (80 + 66)/2
= 73 lb/day (33.14 kg/day)

From Table 10-2, it can be assumed that the k values can be reduced about one-third by 100 percent recirculation, during emergencies. Thus, the area required to provide the needed oxygen is:

A = (73)(0.67)/23.5
= 2.1 acres (0.85 ha)
= (2.1)(43,560 ft^2/acre) = 91,500 ft^2 (8,509.5 m^2)

Two cells, 210 ft by 220 ft (63 m × 66 m) in parallel, each containing sludge storage areas varying in depth from 2 ft (0.6 m) at the edges to 5 ft (1.5 m) at the middle, will meet preliminary design requirements.

Sludge Baffles

Place two sets of baffles parallel to the sides and 35 ft (10.5 m) and 70 ft (21 m) from the inlet (see Figure 10-6A). These baffles are to extend from 1 ft (0.3 m) above the bottom to 2 ft (0.6 m) above the sludge storage surface, to reduce velocities near the top of the sludge. Most of the sludge accumulation will be inside these baffles.

Inlet

Locate three in the center of sludge storage areas, discharging vertically at 6 ft (1.8 m) above bottom and 1 ft (0.3 m) above maximum sludge elevation.

Outlets

Length of sludge baffle needed to reduce velocities to less than 5 fpm (1.5 m/min) is:

$$L = 26{,}800/(60)(24)(2) = 9.3 \text{ ft } (2.8 \text{ m})$$

With a diameter of:

$$D = (9.3)(4)/\pi = 12 \text{ ft } (3.6 \text{ m})$$

Use two concentric surface baffles, with radii of 16 and 8 ft (4.8 and 2.4 m) in the corners around the outlet, and a 6-ft-radius sludge baffle. Outlet will be vertical with a metal cap (see Figure 10-6B).

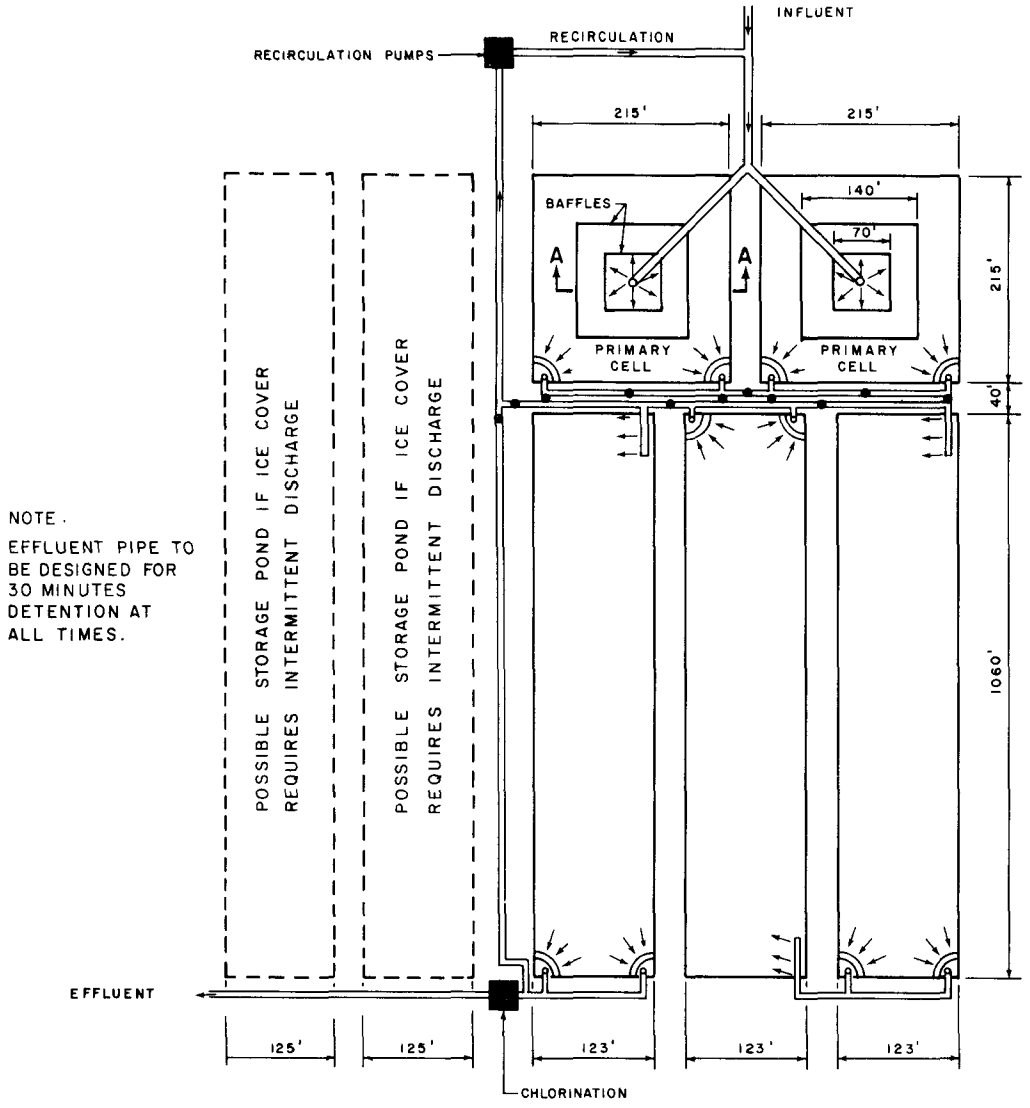

FULL SCALE POND SYSTEM CONFIGURATION

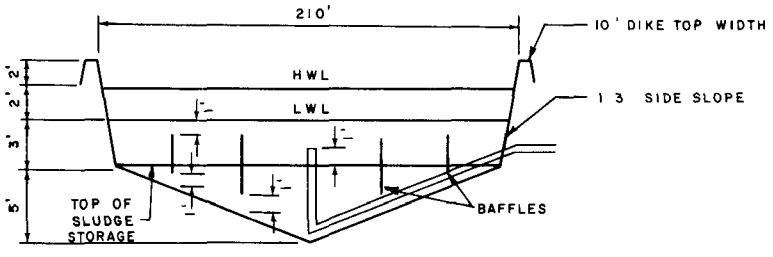

SECTION A-A

FIGURE 10-6A

EXAMPLE FACULTATIVE POND SYSTEM
(NOT TO SCALE)

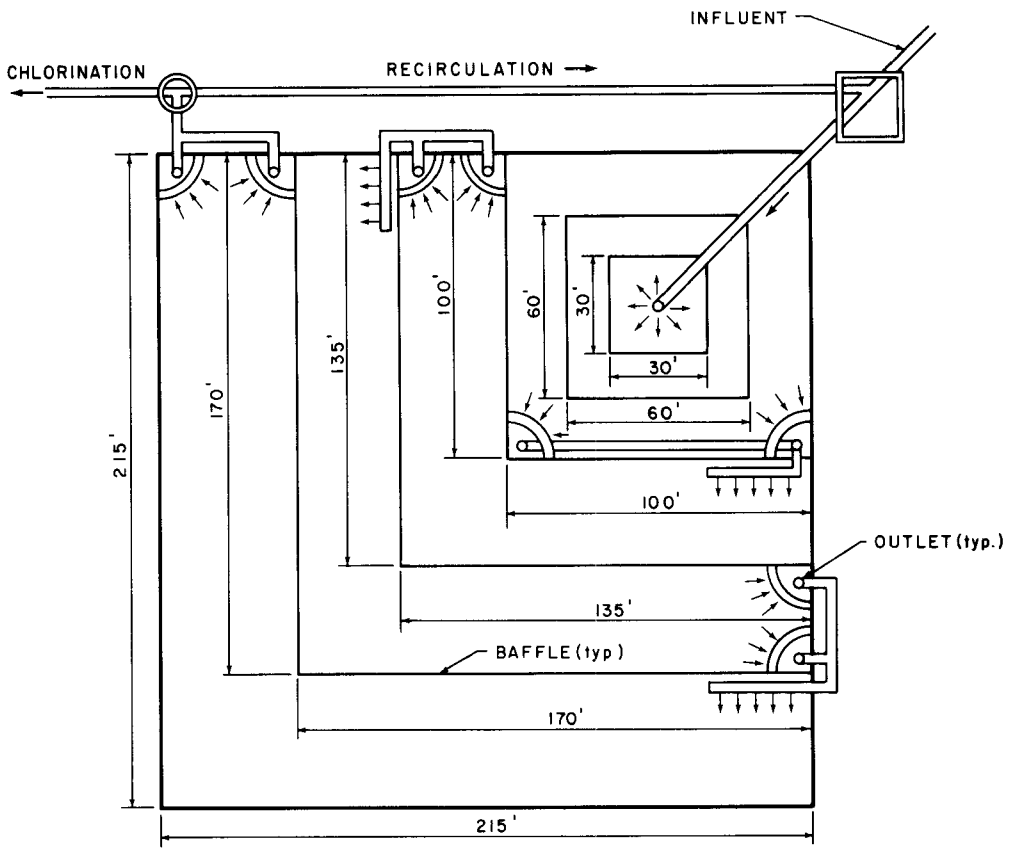

PILOT POND SYSTEM CONFIGURATION

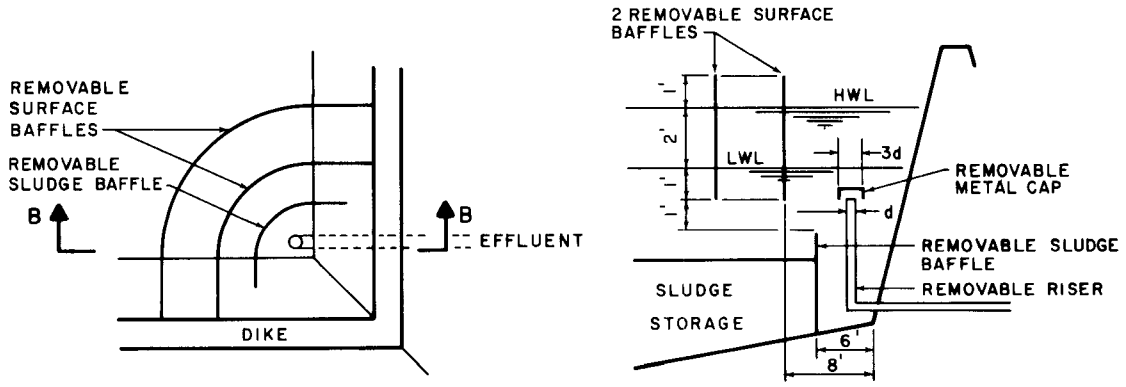

OUTLET DETAIL

SECTION B-B

FIGURE 10-6B

EXAMPLE FACULTATIVE POND SYSTEM
(NOT TO SCALE)

2. *Series Ponds Design*

Three in series will follow the two parallel primary ponds. The total BOD_5 in the primary pond influent will have been reduced by the BOD_5 removed in the settled solids and by cell synthesis. Under the worst circumstances, the minimum BOD_5 reduction would be about 30 percent of the nonsettleable BOD_5. Without good pilot studies, this should be assumed.

Influent BOD_5 to the first cell of the series, assuming no recirculation:

$$L_i = (0.7)(160 \text{ mg/l } BOD_5)$$

$$L_i = 112 \text{ mg/l}$$

(This is confirmed by the probable BOD_5 removal above.)

Effluent BOD_5 must be less than 30 mg/l.

Required detention time may be approximated, using plug flow formula. The value of k may be approximated from:

$$= k_{20}/\theta^{(20-T)}$$

assume

$$k_{20} = 0.1$$

$$k_5 = 0.1/1.08^{(20-5)}$$

$$k_5 = 0.03$$

and

$$t_T = \ln (L_i/L_e)/k_T$$

$$t_T = \ln (112/30)/0.03 = 1.317/0.03$$

$$t_T = 44 \text{ days}$$

The area required in the series ponds is

$$A = 10^6(.2 \text{ mgd})(44 \text{ days})/(7.48 \text{ gal/ft}^3)(3 \text{ ft deep})$$

$$A = 392{,}000 \text{ ft}^2 \ (36{,}064 \text{ m}^2)$$

Assume the equivalent of a division dike at 2 ft above the bottom of a 7-ft-high dike, with 5 ft maximum water depth, 10 ft top width and 1:3 side slopes.

$$w = 10 + (2)(3)(5) = 40 \text{ ft } (12 \text{ m})$$

The two primary ponds then will be

$$w = 2\ (210) + 40 = 450 \text{ ft } (135 \text{ m})$$

Using the configuration shown on Figure 10-6A, the width of each series cell will be

$$(450 - 80)/3 = 123 \text{ ft } (37 \text{ m})$$

and the length of each cell will be

$$L = 392{,}000/(123)(3) = 1060 \text{ ft } (318 \text{ m})$$

Baffles

To decrease the short circuiting, the length-to-width ratio in each of the three series cells may be increased from about 8:1 to about 32:1 by placing a 1,000-ft-long, 6-ft-high baffle in each pond. This baffle addition would require relocation of the inlets and outlets. Pilot studies will indicate whether such baffling is cost effective under the specific site conditions.

Inlets

In each of the three series cells where baffles are installed, place a 50-ft-long multiple-nozzle pipe inlet on the bottom, with the nozzles pointed up and to the rear, to achieve good initial mixing. If baffles are not installed, the pipe should be installed in a corner parallel to a side pointing up and toward the opposite corner.

Outlets

The outlets of the series cells are to be the same as those of the primary ponds.

Chlorine Contactor

The simplest chlorine contactor is an effluent pipe, designed to flow full at all times with a minimum detention time of 30 minutes at peak flow.

Emergency Storage

If the normal operational depth is kept to between 3 and 4 ft (0.9 to 1.2 m) a space above the normal operational depth (up to 5 ft) will always be available for emergency storage. This will provide between 20 and 30 days storage.

3. *Pilot Plant Design*

A simple method for conducting comprehensive pilot studies would be to construct only one primary cell initially. Before system flow reaches its design level, using temporary movable baffles, transform it into a multicell series pilot plant. Sludge storage does not need to be provided for the pilot study. This one primary cell unit, based on detention times, could handle (11/2)/(11 + 44), or about 10 percent of the design flow and the wastewater generated by about (0.1)(2000), or 200 persons (the amount that reasonably might be connected initially).

Configuration

Divide the one primary cell into one primary and three series cells, as shown in Figure 10-6B. The area of a single primary pilot cell would be 11/55 of the primary cell or (11/55)(46,200) = 9,240 ft^2 (850 m^2) (about 95 × 100 ft). The widths of the series pilot cells would be about 35 ft (10.5 m), making the combined length of the three cells 925 ft (278 m). This results in a total length-to-width ratio of about 26:1, the same ratio as in the design cells.

The configuration of this pilot-system series cells would be near enough to that of the projected, full-scale system to reasonably simulate the expected performance of the larger system for further design purposes.

4. *Modifications to the Basic Design* (if significant ice cover)

Configuration

The same as in 1 and 2 (except any baffles that might be damaged by ice should be removable, plus two nonbaffled additional cells in series parallel to one side of the first configuration) (see Figure 10-6A).

Storage

To be achieved by making primary cells 1 ft (0.3 m) deeper (6 ft total, excluding sludge storage) and subsequent cells 3 ft (1 m) deeper (8 ft total) and adding two cells 8 ft deep, to provide 6 months of storage.

Additional volume required for 180 days' storage

$$V = (180 \text{ days})(26{,}800 \text{ ft}^3/\text{day}) = 4{,}830{,}000 \text{ ft}^3 \ (13{,}524 \text{ m}^3)$$

Volume available for storage by deepening primary ponds to 6 ft (2 m) and the series ponds to 8 ft (2.4 m) is:

Primary ponds: (201,088 × 1.5) = 300,000 ft^3 (84,000 m^3) (Note: 3 ft storage available above L.W.L.)

Series ponds: (385,000 × 5) = 1,925,000 ft^3 (Note: 5 ft storage available above L.W.L.)

Total 2,225,000 ft^3 (62,300 m^3)

Volume required in two storage ponds is:

$$V = 4{,}830{,}000 - 2{,}225{,}000 = 2{,}605{,}000\ ft^3$$

With a depth of 8 ft, the area required is:

$$A = 2{,}605{,}000/8 \text{ or } 325{,}625\ ft^2\ (30{,}283\ m^2)$$

Each storage cell could thus be 125 ft x 1,215 ft (37.5 m x 394.5 m).

10.5 Aerated Pond Design

If space is economically available, aerated ponds may be the most cost-effective system in comparison to other treatment alternatives. Also, if existing facultative or aerobic ponds are overloaded, aeration facilities may be added to meet pond oxygen requirements. Ponds dependent only on algae and air-water surface transfer for oxygen require 3 to 10 times as much volume as aerated ponds. BOD_5 loadings of up to 400 to 500 lb/acre/day (450 to 550 kg/ha·d) can be used for aerated ponds subject to icing, in contrast to 40 to 80 lb/acre/day (45 to 67 kg/ha·d) for unaerated facultative ponds not subject to icing. Aerated ponds can produce a more consistently satisfactory effluent through the winter and spring than can facultative ponds. At least three cells are usually required to produce adequate separation of the bacterial, algal, and other microbial cells produced during the metabolism of organic waste matter. If the ponds are in porous ground, the cost of sealing is less for aerated ponds and, in general, the costs of excavation and diking are much less.

Aerated ponds can be either aerobic or facultative. Aerated aerobic ponds are designed to maintain complete mixing, which requires bottom velocities of about 0.5 fps (0.1 m/s)(2). Aerated facultative (partially mixed) ponds are designed to maintain a minimum of 2 to 3 mg/l of DO in the upper zone of the liquid. However, the slower mixing afforded in aerated facultative ponds allows some settling of SS. The aeration system should be able to transfer up to 2.0 lb O_2/lb BOD_5 applied uniformly throughout an aerated facultative pond when the water temperature is 20° C. Intermittently aerated ponds are designed only to provide sufficient oxygen to prevent anaerobic conditions, usually during periods of ice breakup, spring and fall turnover, icing, and at night during warm periods when daytime photosynthesis alone would not provide sufficient oxygen. The oxygen requirements under ice cover can be reduced to about 0.5 lb/lb BOD_5 applied, enough to sustain the much retarded biological decomposition processes at these temperatures.

10.5.1 Aerated Facultative (Partial Mix) Ponds

The facultative type of aerated pond is more commonly used than the aerobic for several reasons:

1. Separate sludge handling facilities, other than drying beds, are not required for aerated facultative ponds.
2. Aeration equipment is much smaller because complete-mix scouring velocities are not required in aerated facultative ponds.
3. Less operational control is required in aerated facultative ponds.
4. Less oxygen is required because some of the BOD_5 is satisfied anaerobically in aerated facultative ponds.
5. Extended-aeration, activated sludge or oxidation ditch systems are usually more cost effective than the aerobic aerated system, which requires clarification and sludge handling facilities.

In colder climates, aerated ponds should be at least 10 ft (3 m) and up to 20 ft (6.1 m) deep, to minimize through-the-surface heat losses. Decreasing the area by 50 percent provides roughly a 7° F (4° C) higher wastewater temperature and results in a 50-percent increase in microbial activity (23).

If detention time is less than 8 to 10 days, SS in the aerated pond effluent generally settle well. Algal growth becomes increasingly predominant at detention times of 20 days and above in aerated ponds. Ponds operated at a detention time of more than 20 days in warm weather, therefore, are apt to have effluents with poor SS settling–similar to those of stabilization ponds (30).

To accommodate mixing inefficiencies, surges, toxicity, seasonal nitrification, and other factors leading directly or indirectly to peak oxygen demands, a safety factor of up to two should be considered in designing oxygen-supply equipment based on BOD_5 loading. Because of fluctuations in loading and temperature, simplification of operation, and other factors, the oxygen requirement determination for sizing the aeration equipment should be based on peak 24-hr summer loadings. However, the detention time in the aerated ponds depends on the rate of metabolism during the coldest period of the year, when the oxygen demand rate is at its lowest. Including the above recommended safety factor of two, the soluble BOD_5 at 20° C (78° F) should be synthesized into cellular material in 2 days (30). Therefore, the configuration of ponds should be such that the detention time is kept between about 3 and 10 days in warm weather and between about 8 and 20 days in cold weather, to reduce the possibility of growth of single-cell green algae.

Algae will be produced in aerobic facultative ponds, unless the velocity gradients are great enough to prevent algae growth during the detention period. Usually, conditions will be such that some algae will be produced. To prevent their escape from a cell into the effluent, a quiescent area should be designed adjacent to each cell outlet, with an overflow rate of 800 gpd/ft^2 (32 m^3/m^2·d) or less. Baffled outlets, similar to those described in subsection 10.4.3.4, should be included in the design. In addition, some means to dampen turbulence, such as a fence of vertical slats, should be placed outside the settling zone, but inside the outer wind baffle. Even so, the concentration of SS in the pond system effluent may not meet secondary effluent requirements at all times of the year without further solids removal before discharge.

Some 10 to 20 percent of the oxygen demand in aerated pond systems can be satisfied by surface aeration under average conditions. In aerated facultative ponds, the equivalent of about 20 to 30 percent of any settled BOD_5 will rise again into the liquid, while 70 to 80 percent of the settled BOD_5 remains in the bottom deposits, depending on the degree of mixing and anaerobic digestion. In aerated facultative ponds, the combination of surface aeration and the satisfaction of 70 to 80 percent of the BOD_5 in the settled solids by anaerobic processes will reduce the oxygen that must be supplied by artificial means by 20 to 40 percent. These factors, plus the additional energy needed for complete mixing, account for the 2:1 to 4:1 difference in energy requirements for aerated aerobic and aerated facultative ponds (30).

However, periodic upsets by shock discharges of organic loads may cause increased oxygen demands. With well-monitored operation, these fluctuations in demand can be relieved by variations in the rate of recirculation of aerated effluent. During early stages of operation, an aerated pond is usually underloaded, and detention time is long enough for some nitrification to take place, thus requiring more oxygen than the BOD_5 determinations alone would indicate.

Under normal conditions, the ultimate carbonaceous oxygen demand of the raw wastewater is about 1.5 times the BOD_5; the nitrogenous oxygen demand is about 4.6 times the ammonia nitrogen, or equal to about 0.5 the BOD_5. Thus, the ultimate oxygen demand (L_u or UOD) of domestic wastewater is roughly twice the BOD_5.

Because there is little difference in the rate of oxygen utilization above about 2 mg/l of DO and more energy is required to maintain higher levels, the aeration facilities should be designed to permit variation in the rate of aeration.

It is important to remember that the hydraulic characteristics of aerated ponds follow neither an idealized "completely mixed" pattern nor an idealized "plug flow" pattern (31). The overall performance of aerated lagoons may be evaluated using unequally sized, square CSTR's (continuously stirred tank reactors) in series model (31).

The required detention time can be determined on a preliminary basis using the following equation (32):

$$t_T = \frac{L_i - L_e}{L_e \cdot k_T}$$

where

t_T = detention time at T, days

T = water temperature, °C (to obtain water temperature [T] from air temperature, see Figure 10-7)

L_e = effluent BOD_5, mg/l

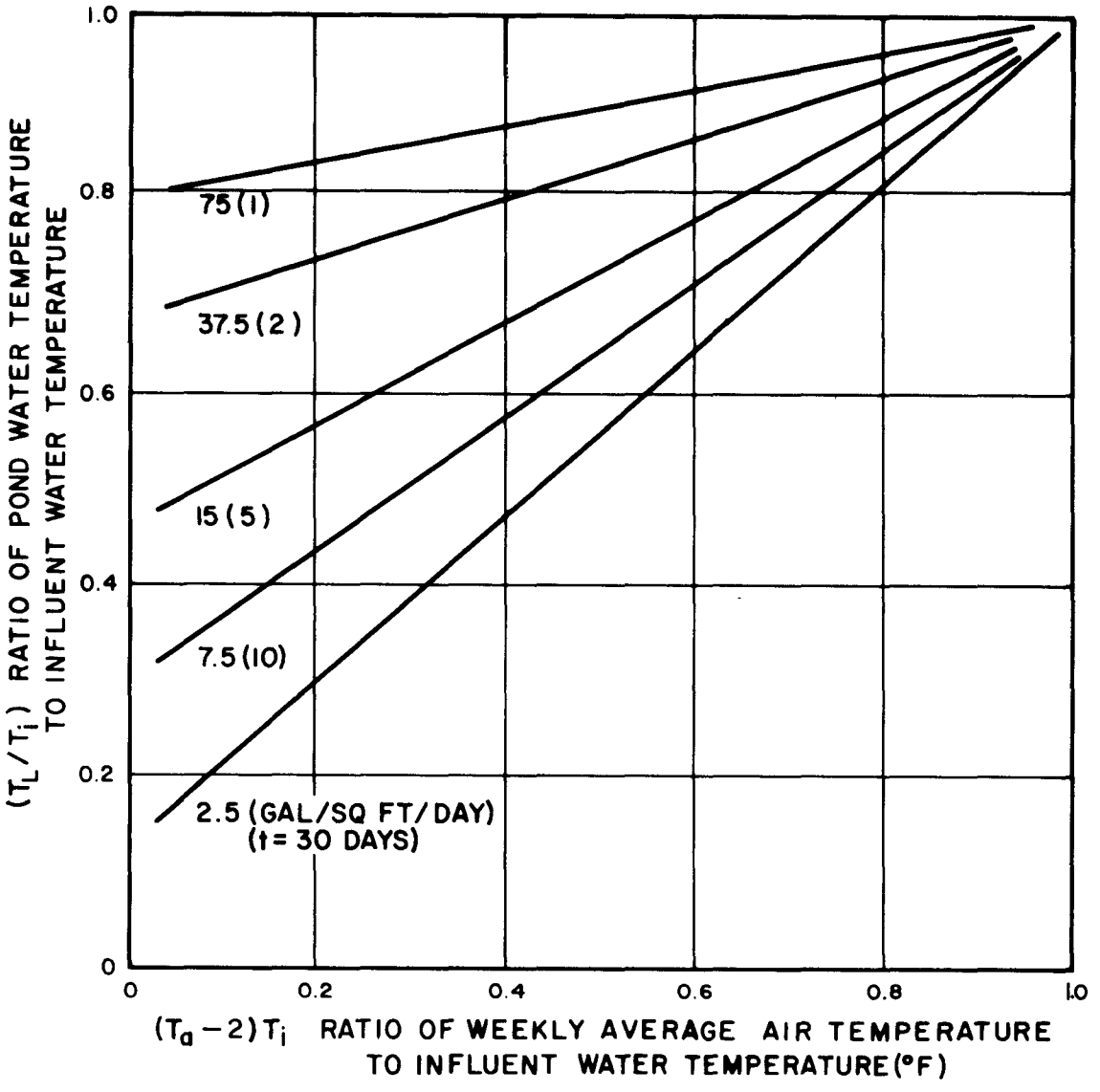

FIGURE 10-7

AERATED POND WATER TEMPERATURE
PREDICTION NOMOGRAPH FOR A POND DEPTH OF 10 FEET (30)
(FOR VARIOUS LOADINGS AND RETENTION TIMES)

L_i = influent BOD_5, mg/l

k_T = BOD_u removal rate constant at T, $days^{-1} = k_{35}\theta^{(35-T)}$

where

k_{35} = BOD_5 removal rate at 35° C, $days^{-1}$ (an approximate value of k_{35} is 1.2) (7)

θ = For domestic wastewaters, lacking the desirable specific pilot study determinations, θ can be assumed to be 1.08 for aerated ponds.

BOD_u, instead of BOD_5, should be used to satisfy the ultimate carbonaceous oxygen demand. If SS removal facilities follow an aerated pond, reaction rate values for determinations of design retention time should only include synthesis reactions and not the additional time required for endogenous respiration reactions.

10.5.2 Aerated Aerobic (Complete Mix) Ponds

Because no settling takes place in an aerated aerobic pond, its primary function is the conversion of raw organic matter to dissolved solids and cell tissue. Quiescent settling areas adjacent to cell outlets and/or an added SS removal process (such as a clarifier or slow sand filtration), must follow aerated aerobic treatment before discharge to insure compliance with SS removal requirements. Unlike algae in facultative ponds, the microbial cells (mostly bacteria), resulting from aeration of only a few days, usually will agglomerate and settle satisfactorily. Solids are often returned to aerated aerobic ponds to improve performance during cold periods. Under these latter circumstances, the pond system becomes a moderately efficient, modified activated sludge process.

In an aerated aerobic pond, the amount of oxygen required (exclusive of that needed for nitrification) can be approximated from (10):

$$O_r = aL_r + (b)\,(MLVSS)$$

where

O_r = oxygen required, mg/l

a = ratio of oxygen used to carbonacous BOD_u removed, which is usually 0.35 to 0.65 and averages 0.50 for domestic wastewater.

L_r = BOD removed in pond, mg/l

b = ratio of carbonaceous BOD_u (mg/l) to MLVSS (mg/l), which is usually 0.08 to 0.14 and can be approximated as 0.12 for domestic wastewater

MLVSS = mixed liquor volatile suspended solids, mg/l

The second term in this equation can be dropped, if the detention time is small enough to prevent endogenous respiration. The aerated aerobic pond, with a 24-hr aeration period (under ideal conditions), represents an economic design for municipal wastewater ponds, if the minimum water temperature remains above 20° C (43° F), because it requires the least time and land requirements to reduce the soluble BOD_5 to 4 to 8 mg/l. Aerated ponds can be considered completely mixed when the power level is equal to or greater than about 30 hp/10^6 gal (5.9 kW/10^6 l) of maximum storage volume.

10.5.3 Oxygen Requirements

The rate at which oxygen must be supplied to satisfy oxygen requirements (exclusive of nitrification) can be determined, pending the pilot plant results, from the following equations (30). The oxygen requirements in each cell will vary with temperature.

$$O_R = 4.17 \times 10^{-3} (L_u)(1/t + b_1)(c)$$

where

O_R = oxygen required, lb/1,000 gal/day

L_u = ultimate carbonaceous oxygen demand (BOD_u) of influent, mg/l

t = detention time, days

b_1 = endogenous oxygen uptake rate, day (about 0.15 for municipal wastewater)

c = ratio of mixed liquid BOD_u to influent BOD_u, which can be assumed (pending pilot plant results) to be about 1.05 in the winter and 1.20 in the summer.

The oxygen transfer rate must be greater than the oxygen uptake rate. The power level required to satisfy the oxygen transfer rate, using surface mechanical aerators, can be determined from (30):

$$P_v = 1.73 \times 10^{-4} \left[\frac{O_{S_{20}}}{O_{S_T} \cdot O_L}\right] \left[\frac{L_u}{N_o}\right] \left[\frac{1}{t} + 0.15\right] \left[1.02^{(T-20)}\right]$$

where

P_v = delivered power, hp/10^6 gal

O_{S_T} = oxygen saturation at T, mg/l (water T can be obtained from Figure 10-7)

O_L = required oxygen concentration in pond, mg/l

L_u = ultimate carbonaceous oxygen demand of influent, mg/l

N_o = oxygen transfer efficiency, lb O_2/hp·hr

t = detention time, days

Figure 10-8 illustrates the possible use of this equation, given an oxygen transfer efficiency of 1.7 lb O_2/hp·hr, a summer saturation DO of 7.0 mg/l, and a minimum DO to be maintained of 2.0 mg/l, at different levels of BOD_5 in the influent (30). The curves in Figure 10-8 must be altered to reflect the specific oxygen transfer efficiency of the mechanical aerator being used and the DO conditions which exist, if they differ from the example.

Aerated facultative ponds can be designed to conserve energy, if aeration supply is reduced in steps from the entrance to the outlet of the pond. Reduction in steps can be accomplished by 1) several increases in spacing between diffusers or mechanical aerators or 2) reductions in power to aerators to more nearly match decreasing oxygen requirements of the organic matter in the stabilized wastewater. Peak influent BOD_5 concentrations can be reduced by recirculating treated effluent to the pond influent. There should always be some recirculation (5 to 10 percent) of final aeration cell effluent to the influent, to maintain a satisfactory mix of active microbes.

Other less widely used methods of aeration, such as air guns and helical units, should be considered. This type of equipment allows greater depths, up to 20 ft (6 m); like diffused aerators, it can be used effectively, even in freezing temperatures. Care should be taken when using manufacturers' design criteria, because no standardized rating procedure presently exists. Table 10-7 presents a comparison of alternate aeration equipment for aerated ponds. Illustrations of this equipment are given in Figure 10-9.

Diffused aeration through plastic tubing or vertical tubes produces slower mixing than mechanical aeration, which is more conducive to growth of algae and more uniform distribution of the oxygen resources throughout a facultative aerated pond. However, mechanical aerators use much less power in transferring oxygen to water than do diffusers. With adequate separation of bacteria and algae from the effluent, a 90-percent BOD_5 reduction is possible. The critical effluent quality parameter from aerated lagoons is the SS concentration.

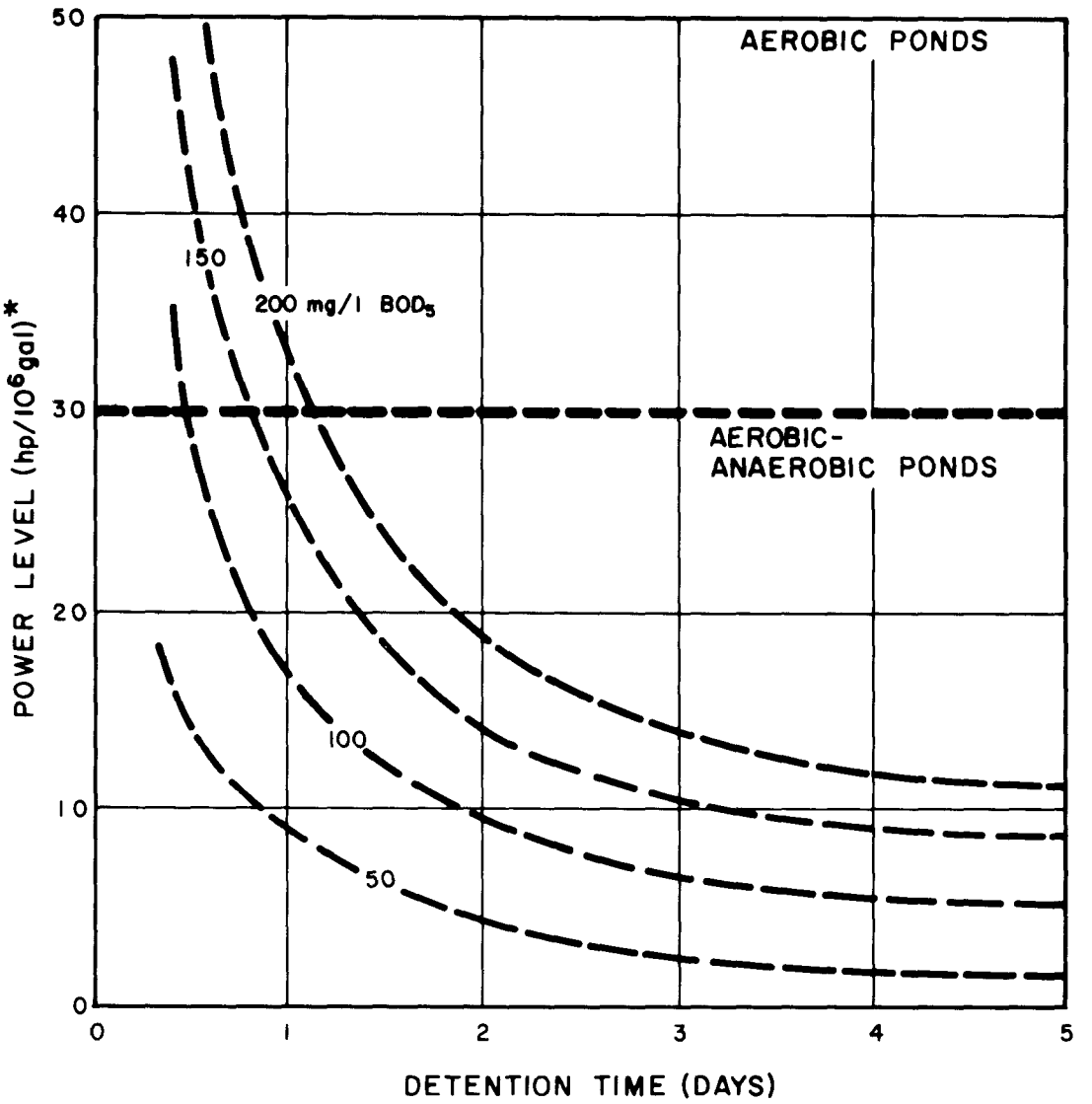

*WHEN:

N_o= 1.7 Lb O_2/hp/hr

O_{ST}=7.0 mg/l t = 1 DAY

O_L=2.0 mg/l L_i= 100-150 mg/l

FIGURE 10-8

POWER LEVEL FOR OXYGEN TRANSFER (30)

TABLE 10-7

TYPES OF AERATION EQUIPMENT FOR AERATED PONDS

	O_2, lb (Standard Condition)	Oxygen Production lb O_2/hp	Power Requirements hp/10^6 gal	Common Depth ft	Advantages	Disadvantages
Floating Mechanical Aerator	1.8 - 4.5/hp			10-15	Good mixing and aeration capabilities; easily removed for maintenance.	Ice problems during freezing weather; ragging problem without clogless impeller.
High Speed		1.5	35			
Low Speed		2.5 to 3.5	25			
Rotor Aeration Unit (brush type)	3.5			3-10	Probably unaffected by freezing; not affected by sludge deposits, good for oxidation ditches.	Requires regular cleaning of air diffusion holes, energy conversion efficiency is lower.
Plastic Tubing Diffuser Diffused Aeration	0.2-0.7/100 ft	0.5 to 1.2	100	3-10	Not affected by floating debris or ice; no ragging problem, uniform mixing & oxygen distribution.	Requires regular cleaning of air diffusion holes. energy conversion efficiency is lower.
Air-Gun	0.8 - 1.6/unit	12-20		12-20	Not affected by ice; good mixing.	Calcium carbonate build-up blocks air holes; potential ragging problem affected by sludge deposits.
Helical DIffuser	1.2 - 4.2/unit			8-15	Not affected by ice; relatively good mixing.	Potential ragging problem; affected by sludge deposits.

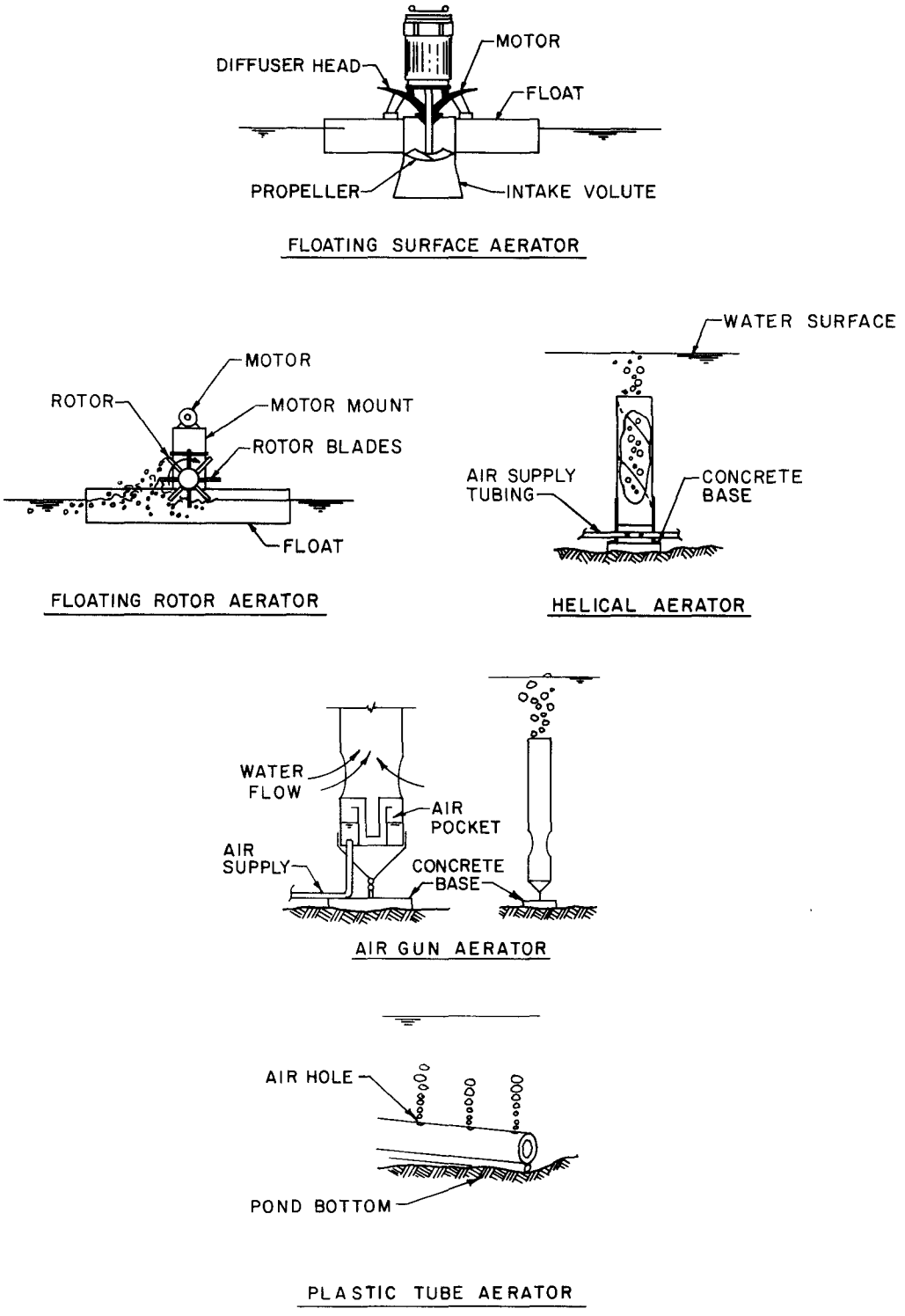

FIGURE 10-9

SCHEMATIC VIEW OF VARIOUS TYPES OF AERATORS

Mechanical aerators, used in aerated ponds are generally divided into two types: 1) rotor and horizontal shaft aerators (Kessener brush) and 2) the more common turbine or propeller vertical-shaft aerators. In all types, oxygen transfer occurs through a vortexing action and/or from the interfacial exposure of large volumes of liquid sprayed over the surface.

Rotor aerators, relatively new in the United States, are particularly adaptable to use in shallow ponds (such as aerobic ponds) that are less than 5 ft (1.5 m) deep. Although no precise comparison has been made, rotor aerators appear to have a much greater pumping capacity than the propeller aerators (24).

Propellers aerators require a minimum depth, depending on the horsepower of the unit. For shallow ponds, a large number of low horsepower units are required, and the cost per horsepower rises. The propeller aerators tend to recycle much of the volume pumped, especially in shallow ponds (24).

Floating propeller or turbine aerators are mounted out in the pond, far enough apart to minimize interference with one another or with other pond features. If used for shallow ponds, they require minimum depth pits, lined with erosion-resistant surfaces. These surfaces are usually some form of paving, such as rock, asphalt, or concrete. Power access is usually via underwater cable; maintenance access is almost always by boat (24). To optimize aeration and mixing and to avoid interference between units, aerator manufacturers have developed criteria for minimum areas and depths, depending on the horsepower of the aerator and the configuration of the impeller.

Floating rotor aerators may be mounted in the pond or directly off the dike slopes. The entire dike slope in the immediate vicinity should be provided with erosion protection. Units mounted on the slope offer easy access for maintenance and repair and the extra reliability of an above-water power supply (24).

Aeration systems are designed on the basis of their oxygen-transfer rate at standard conditions. Standard conditions are defined as 1.0 atmosphere dry pressure at 20° C (40° F) for tap water containing 0.0 mg/l DO. The required rate at which oxygen must be transferred to the wastewater to raise the DO the desired amount under actual operating conditions is given by the following (33):

$$AOR = 8.33\ Q\ (C - C_i)$$

where:

AOR = actual oxygen-transfer rate, lb O_2/day

Q = influent flow, mgd

C = required final DO concentration, mg/l

C_i = DO concentration of the influent, mg/l

The actual oxygen-transfer rate may be adjusted to standard conditions by applying correction factors, according to the following equation (33):

$$SOR = \frac{AOR}{\left(\frac{\beta C_s - C}{C_{20}}\right) 1.024^{T-20} \alpha}$$

where

SOR = standard oxygen-transfer rate, lb O_2/day

C_S = DO saturation concentration of tap water at temperature T, mg/l

C_{20} = DO saturation concentration of tap water at 20° C, mg/l

T = design temperature of the wastewater, °C

α = O_2 transfer coefficient of the wastewater

β = O_2 saturation coefficient of the wastewater

Diffused air systems are designed to provide firm blower capacity, which is the capacity remaining with the largest blower out of service. The maximum air rate required to provide firm capacity may be computed from the standard oxygen-transfer rate as follows (33):

$$A_m = \frac{SOR}{1440\, e_t\, \gamma_a\, P_o}$$

where

A_m = firm blower capacity, cfm

e_t = diffusivity of O_2 in air

γ_a = specific weight of air at design temperature and relative humidity, pcf

P_o = O_2 content of dry air, proportion by weight

Mechanical aeration systems are designed on the basis of the horsepower required to produce the needed standard oxygen transfer rate (SOR). One aeration design equation proposed by Kormanik for an aeration basin is (33):

$$P = \frac{SOR}{24\, N_o\, F_g\, \eta}$$

where

P = horsepower required

SOR = standard oxygen-transfer rate, lb O_2/day

N_o = O_2 transfer efficiency under standard conditions in tap water, lb O_2/hp-hr

F_g = correction factor related to basin geometry

η = aerator efficiency correction

For more information on aerator and aeration design refer to Chapter 7.

10.5.4 Aerated Facultative Pond Design Procedure

A procedure for the design of facultative aerated ponds is as follows:

1. Detention time can be estimated from the following (previously stated) formula:

$$t_T = \frac{L_i - L_e}{L_e \cdot k_T}$$

2. After establishing the best depth to be used for a specific type of equipment and location, establish the pond volume from:

$$V = qt$$

where

V = volume, ft^3

q = influent flow, ft^3/day

t = detention time, days (from step 1, above)

3. Divide the volume into three or more cells, with the first cell the largest. For aerated facultative ponds, all cells after the first should have diminished aeration, thus permitting settling.
4. Determine the daily oxygen requirement for the warmest period to satisfy the heaviest expected biological oxygen demand for each cell:

$$O_R = 4.17 \times 10^{-3} (L_u)(1/t + b_1)(c)$$

(If a pond cell is to be completely mixed, the power level should be equal to or greater than 30 hp/10^6 gal (5.9 kW/m^3) of maximum storage volume, which is more than needed to satisfy oxygen needs. At this power level, the detention time should be kept to a minimum to conserve energy.)

5. Determine the power requirements for different types of mechanical aeration equipment (or air requirements for diffusers) for each cell. If icing could occur, determine the measures required to prevent capsizing aerators or a power that failure that would allow ice to inactivate the aerator.
6. Determine if measures must be taken to insure efficient SS removal from the effluent of each cell, to satisfy effluent requirements. Outlets from aerated aerobic or aerated facultative ponds should minimize passage of SS in the effluent by using multiple, well-baffled outlets designed to withdraw wastewater at low velocities from the middle depths of the pond. One method is to use a circle of stakes (with tops below the L.W.L.) outside the sludge and scum (wind) baffles, designed to reduce turbulence and to provide sufficient quiescent area, to attain an overflow rate between the stakes and the outlet baffles of less than 800 gpd/ft^2 (32 $m^3/m^2 \cdot d$) at peak flow. Care must be taken to prevent anaerobic conditions from developing in this quiescent area by designing for the minimum detention time necessary and providing for periodic sludge removal.
7. Determine the type of polishing process needed, if any, to insure satisfactory SS removal from the pond effluent.

More detailed descriptions of both aerobic and facultative aerated pond designs are presented in reference (23).

Performance data and design criteria for single- and two-cell aerated demonstration pond systems at Winnipeg, Canada, are summarized in Tables 10-8 and 10-9, respectively (14). Flow diagrams of the demonstration pond systems are shown in Figure 10-10. As indicated in Table 10-8, effluent BOD_5 and SS concentrations from the demonstration pond systems are relatively uniform and, on an average basis, slightly higher than the allowable effluent concentrations stipulated in the U.S. EPA Secondary Treatment Standards. Effluent quality could undoubtedly be improved by the provision of separate SS removal facilities, either within or outside the cell basins.

TABLE 10-8

EFFLUENT CONCENTRATIONS FOR CHARLESWOOD DEMONSTRATION PONDS, WINNIPEG, CANADA: 21-MONTH AVERAGE (14)

Pond System[1]	Effluent BOD	Effluent SS
	mg/l	mg/l
Air-aqua (two cell)	37	34
Surface Aerator (one cell)	38	39
Air-gun (one cell)	34	34

[1] (See Figure 10-10)

TABLE 10-9

DESIGN CRITERIA: CHARLESWOOD DEMONSTRATION PONDS

Parameter		Value
Average Design Flow (each pond), mgd		0.6
Influent 5-day BOD, 20° C, mg/l		250
Influent Suspended Solids, 20° C, mg/l		180
Oxygen Utilization Factor, a (lb oxygen required per lb 5-day BOD removed)		1.50
Operating DO, mg/l		2.00
Effluent Temperature, °C		
Winter		0
Summer		24
Influent Temperature, °C		
Winter		9
Summer		18
Mean Ambient Temperature, °C		
Winter		-27
Summer		24
Treatment Efficiency Required, percent		90
Retention Time, days		
Tube Diffusers		30
Surface Aerator		20
Air-gun		20
Operating Depth, ft		
Tube Diffusers		10
Surface Aerator		11
Air-gun		17
Pond Volume, gal		
Tube Diffusers, Tapered Spacing		15×10^6
Surface Aerators, 8 at 105-ft cc		10×10^6
Air-guns, Tapered Spacings		10×10^6
Mixing Requirements for Surface Aerators		0.013 hp/1,000 gal
Process Loading		
Tube Diffusers	15.9 lb/acre/day	0.52 lb BOD_5/1,000 ft^3/day
Surface Aerator	24.7 lb/acre/day	0.78 lb BOD_5/1,000 ft^3/day
Air-gun	37.2 lb/acre/day	0.78 lb BOD_5/1,000 ft^3/day

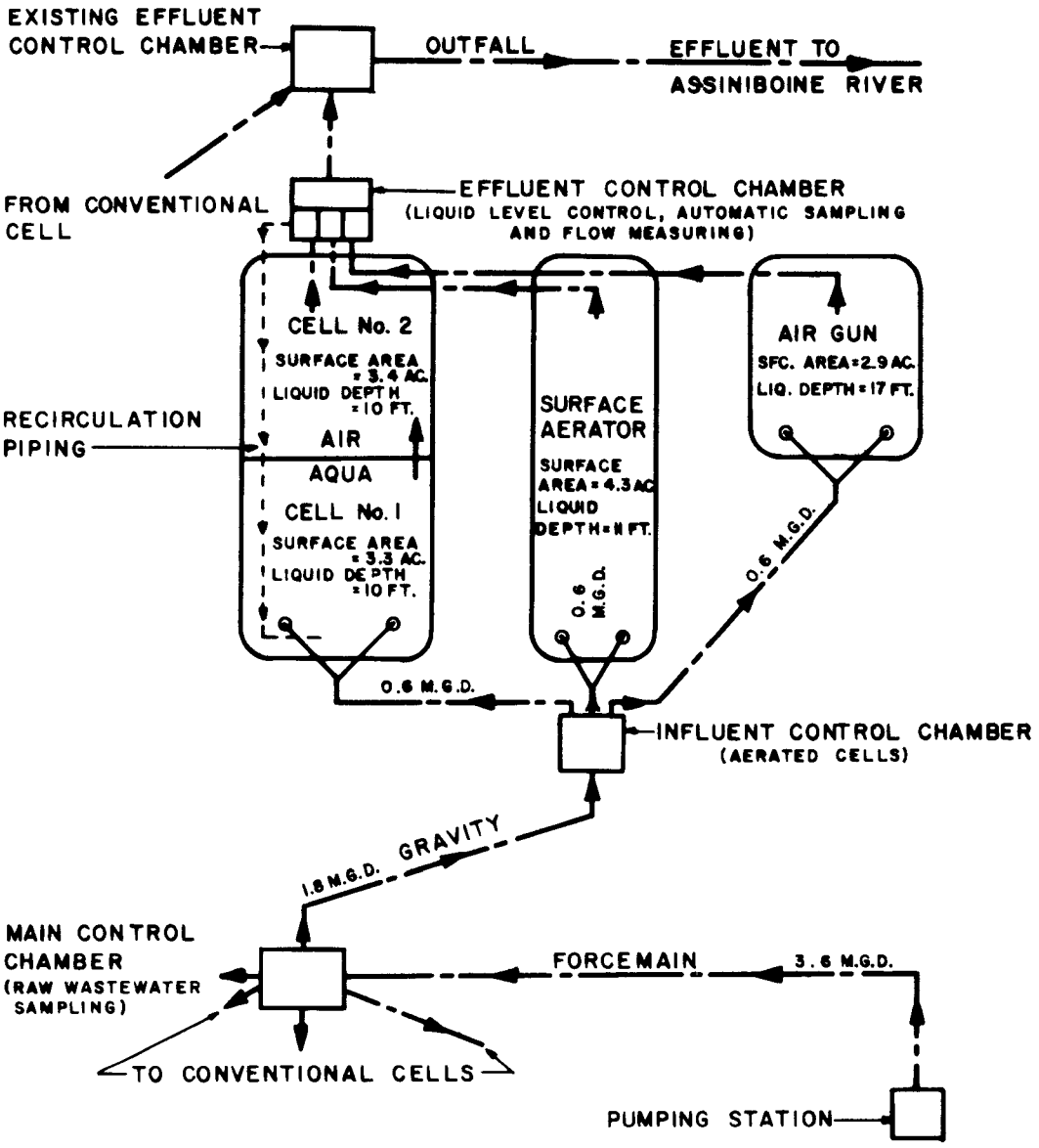

NOTE

M.G.D. - USA UNITS

FIGURE 10-10

CHARLESWOOD DEMONSTRATION PONDS
WINNIPEG, CANADA

A three-cell, step aerated pond system in Blacksburg, Virginia, is meeting effluent BOD_5 standards using a diffused air system (34). Design criteria for this system are given in Table 10-10. The system layout is illustrated in Figure 10-11; BOD_5 removal for 27 weeks is shown graphically in Figure 10-12. The performance of the cells in this system, particularly with respect to SS removal, could be improved, if necessary, by inclusion of separate SS removal facilities within and/or outside the cells.

TABLE 10-10

DESIGN CRITERIA FOR BLACKSBURG, VIRGINIA, DIFFUSED AIR AERATED POND SYSTEM

Design Flow, gpd	40,000
Earthen Dikes side slopes	3:1
Depth, ft	8
Total Bottom Area, ft^2	16,000
Total Surface Area, ft^2	31,744
Volume of Three Ponds, gal	704,640
Detention Time, days	38
Altitude, ft	2,000
Air Temperatures, °C	-20 to 37
Operation Time per Week, hr	5
Electrical Costs per Month, $	30

10.6 Aerobic Pond Design

Aerobic ponds depend on 1) algal photosynthesis, 2) at least 3 hours daily of mixing, 3) good inlet-outlet design, and 4) a minimum annual air temperature above about 5° C (41° F), to supply the major portion of the required DO (21). Without any one of these four requisite conditions, an aerobic pond may develop anaerobic conditions or be ineffective. Because light penetration decreases rapidly with increasing depth, aerobic pond depths are restricted to 1.5 to 2.0 ft (0.45 to 0.6 m) to maintain active algae growth from top to bottom. The allowable loading is dependent on available light energy:

$$L_u = S'$$

where

L_u = UOD that can be satisfied, lb/acre/day (maximum loading is about 200 lb of UOD/acre/day)

S' = light energy, $cal/cm^2/day$ (can be approximated from Table 10-5).

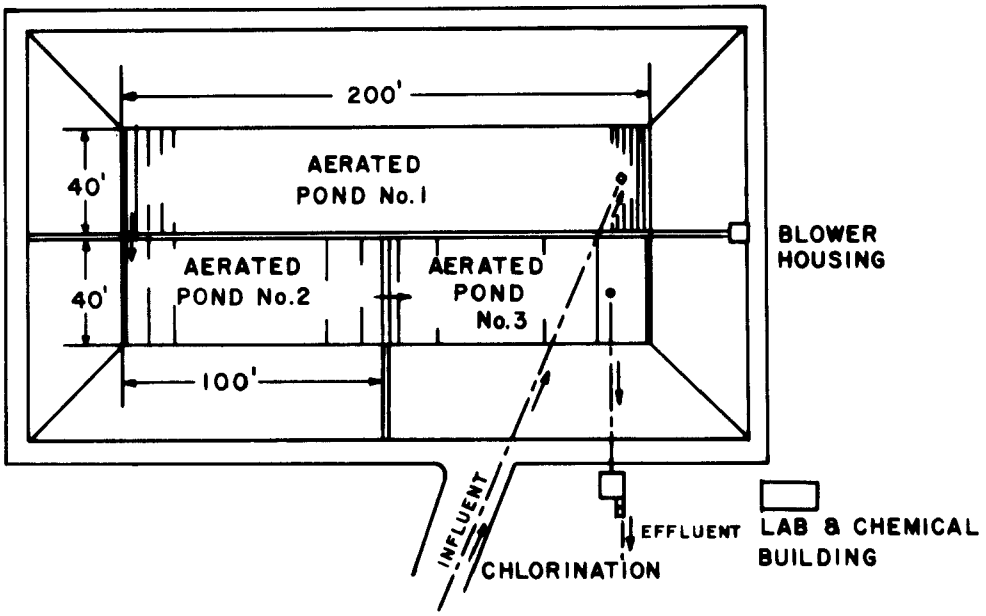

FIGURE 10-11

SYSTEM LAYOUT FOR BLACKSBURG, VIRGINIA,
DIFFUSED AIR AERATED POND SYSTEM

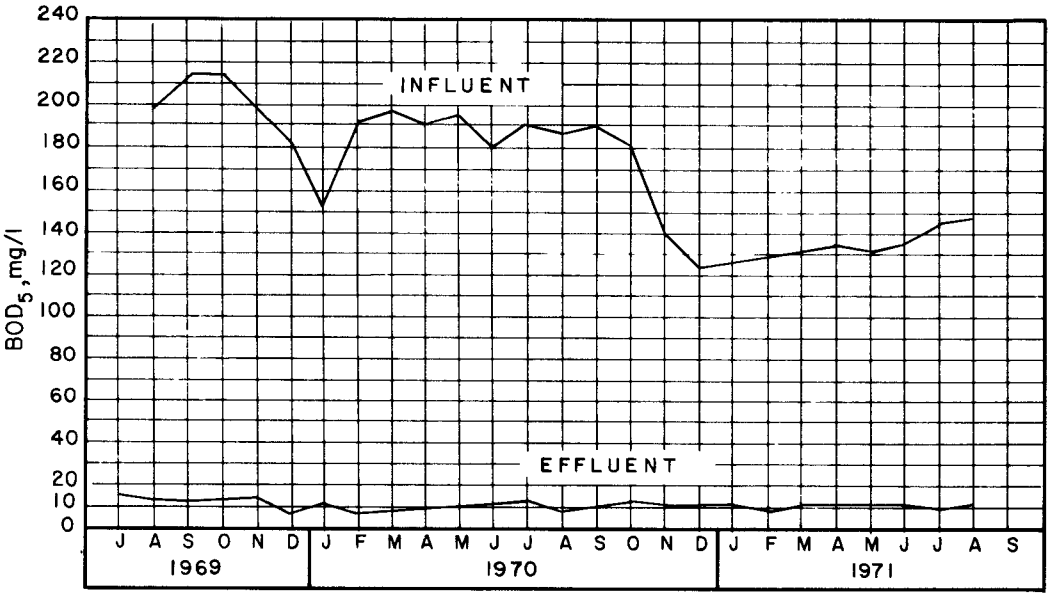

FIGURE 10-12

BOD REMOVAL FOR BLACKSBURG, VIRGINIA,
DIFFUSED AIR AERATED POND SYSTEM

The first equation in section 10.5 can be used to determine the required detention time (t). The depth can be found from data developed (21) for the energy balance when the highest percentage BOD_5 removal occurs in the form of algal cell production:

$$d = 3FS't/O_p$$

where

d = depth, ft (should be less than 1.5 ft)

F = light conversion efficiency, percent (0.8 to 2.8) (see Figure 10-13)

S′ = light energy, $cal/cm^2/day$ (See Table 10-5.)

t = detention time, days

Op = oxygen production, lb/acre/day

The required detention time typically falls between 5 and 10 days. Aerobic ponds should be designed to provide a recirculation rate at least equal to the influent flow rate (q), to provide influent dilution, microbial seeding, and additional DO. Odor is not a problem with aerobic ponds, if they are operated and maintained correctly. Hydraulic loadings on aerobic ponds can be 2 to 10 in./day (50 to 250 mm/day).

Intermittent mixing and/or recirculation can be accomplished using airlift pumps, propeller pumps, brush aerators, or rotor aerators, among other methods (20) (32). Mixing is best done between 12 a.m. and 5 a.m. and when the pH is above 9.5 to replenish CO. On the other hand, it is believed that higher pH effectively reduces coliform densities. Mixing should create a bottom velocity throughout the pond of at least 0.5 ft/sec (0.15 m/s). If the addition of aeration equipment is necessary, it may be more efficient to design the aerated aerobic pond as an oxidation ditch (see Chapter 7).

The maximum size of cells in an aerobic pond system should be no more than about 10 acres. The cells should be arranged in end-around channels up to 50 ft wide to better achieve plug flow. Otherwise, extensive mixing equipment may be necessary. The cells and outlets should be designed to 1) prevent withdrawal of SS, 2) function with variable depths in the ponds, and 3) decant the overflow only when the ponds are quiescent. Even so, some additional processing usually will be necessary to remove algal and other microbial cells from the effluent before it will consistently meet effluent requirements.

Aerobic ponds usually need lining to prevent infiltration and scour. Chemicals in solution adversely affecting biological reactions in aerobic oxidation are chromium (Cr^{3+}) and ammonium (NH_4^+); chemicals which adversely affect photosynthetic oxygenation are calcium (Ca^+), chlorine (Cl_2), and chromium (Cr^{3+}).

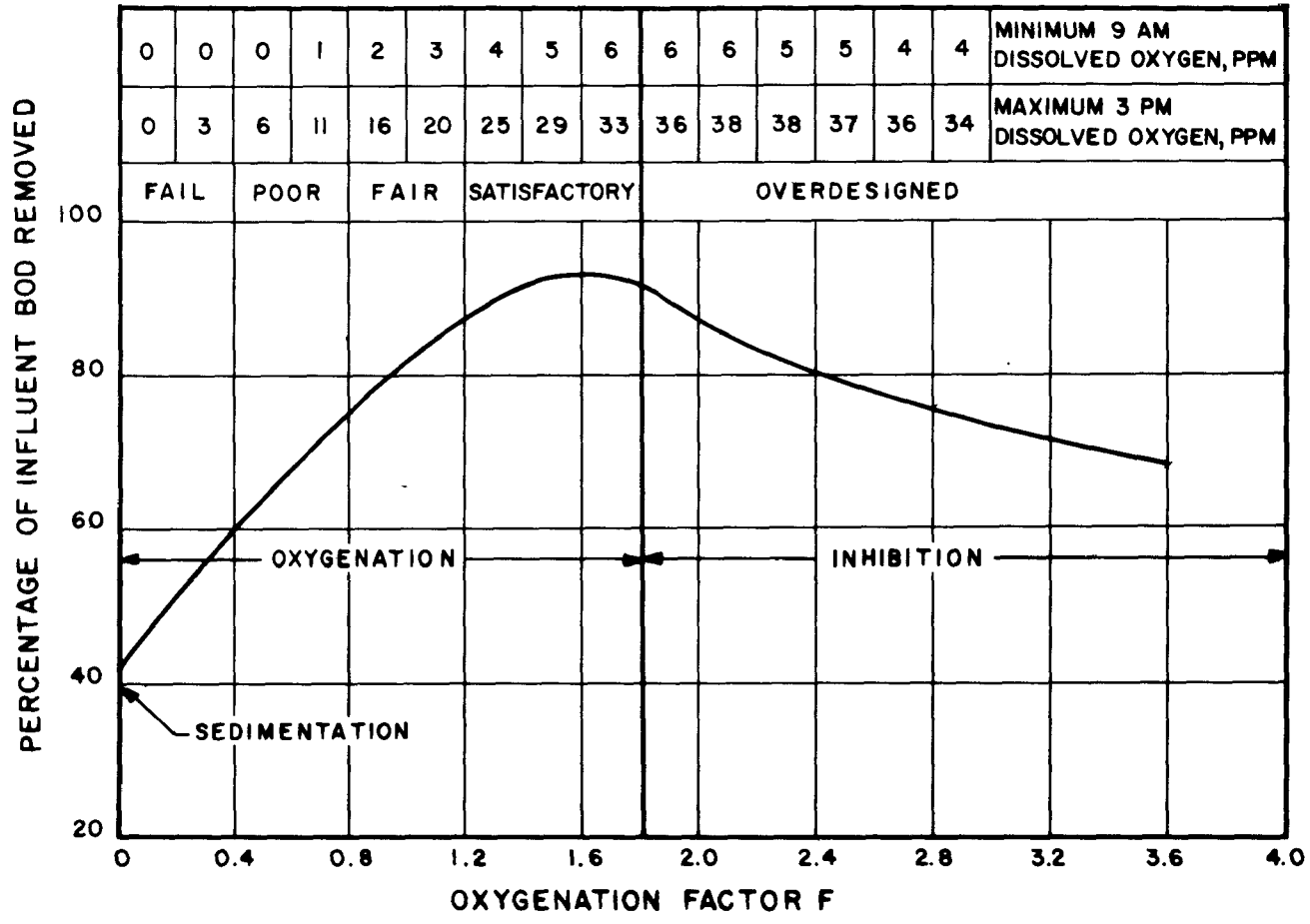

FIGURE 10-13

RELATIONSHIP BETWEEN OXYGENATION FACTOR AND BOD REMOVAL IN WASTE PONDS (27)

10.7 Polishing Pond Design

Maturation ponds are employed to remove additional BOD_5 and bacteria from treated wastewater, primarily by sedimentation. To prevent algal growth, there should be at least three units in series, with a detention time in each of 48 hr or less (7) and depths variable from 3 to 8 ft. (See Figure 10-2.) For best removal of pathogens, detention times in each of the three or more ponds in series should be greater than 5 days (45). Inlets and outlets must be designed to prevent short circuiting; the outlets must be designed with very low exit velocities and baffles to minimize escape of cells in the effluent (32). If the receiving stream flow is small and its water quality important, the ponds should be designed to equalize effluent flows and loadings before discharge. Experience (35) has shown that polishing ponds provide a buffering action, preventing adverse fluctuations in secondary plant effluent quality from reaching the receiving water. Fish may flourish in polishing ponds where the nutrient balance is satisfactory , assisting in the removal of SS and nutrients (35). It has been found that after 12 years of operation, polishing ponds can produce an increase in DO and a reduction in BOD; fecal organisms may virtually disappear. Although polishing ponds increase the DO of the effluent, they also generate algae, and may, thus, increase SS in the effluent if not designed and operated correctly. Polishing pond treatment, if discharge is into an intermittent stream, has been found to reduce fungal and filamentous bacterial growths in the stream (4).

10.8 Microbial Cell and SS Removal from Pond Effluent

A major problem in all ponds is occasional discharge of microbial cells, which can exert an oxygen demand on the receiving water. In recent years, there has been a concentrated effort to develop simple means of removing cellular material from pond effluent. Discussions of possible methods can be found in references (15), (16), (17), (24), (26), (28), (36), (37), (38), (39), (40), and (41). Reference (40) has a bibliography containing an additional 136 references. Chapters 11 and 12 present design criteria for such polishing units. The types of algae found in wastewater treatment ponds can be divided into four classes: 1) green algae, 2) blue-green algae, 3) diatoms, and 4) pigmented flagellates. Green algae, predominant in efficient lagoons, are nonmotile and less than 10 μ in size; have a negative charge, preventing natural flocculation or filtration; have a density near that of water; and are kept in suspension by a mild fluid motion. Blue-green algae are usually filamentous, may form floating mats with string coating; may develop pig-pen odor; may hinder light penetration; and may diminish surface aeration and mixing. Diatoms are nonmotile; have a silica shell structure; and are large enough to clog sand filters. The pigmented flagellates, generally motile, are smaller than 15 to 30 μ and have a flexible cell wall, which allows them to deform and pass through small restrictions (18).

Stabilization ponds are usually selected for wastewater treatment because of their simplicity of operation. Thus, any additional treatment required for removal of algae should be simple to operate and should reliably remove suspended matter. Of the proven methods, filtration currently appears to be the simplest (27) (40). In some cases, it may be necessary to add chemicals and/or clarifiers (or flotation units) before filtration to decrease the load on filters and to remove single-cell green algae or phosphorus.

Total nitrogen levels in facultative pond effluents may be quite low. Much of the nitrogen in the pond influent may be incorporated into the algal cell. Also, nitrification appears to take place in the ponds followed by some denitrification in the anaerobic bottom zone. With proper design and operation of the pond treatment system, the insertion of an algal removal step can produce an effluent low in both oxygen-demanding materials and nutrients.

Intermittent sand filters have been utilized for treatment of settled wastewater since about 1828 (40). At present, additional work is underway to refine design criteria for the intermittent sand filtration of wastewater stabilization pond effluent. Some viable algal cells tend to pass through the entire depth of the filters (42). The effective size of the sand should be about 0.17 mm for best BOD removal (16).

Conclusions reached on the use of intermittent sand filters by Utah State University are as follows (40):

1. Length of filter run is related to the influent SS concentration and the hydraulic loading rate.
2. Intermittent sand filters can be used to treat wastewater and reduce SS to less than 10 mg/l, VSS to less than 5 mg/l, and BOD_5 to less than 10 mg/l.
3. Winter operation of the filters did not create any serious problems.

Studies in 1973 and 1974 at Eudora, Kansas, where submerged rock filters have been polishing the effluent from the Eudora multicell wastewater treatment pond system, indicate the following (17) (43):

1. The rock sizes selected should be between 25 mm and 125 mm and the range in size should be no more than 50 mm.
2. A biological film must be developed on the rock before the filters are effective.
3. Because the biological film will function in an anaerobic environment in the summer and early fall, some postaeration facility (possibly cascade) is required.
4. If sulfate is present in the carrier water and the alkalinity is insufficient to keep the pH above about 9, hydrogen sulfide will be formed, if anaerobic conditions exist in the filter. At a pH of 7, about 52 percent of the sulfides present will be in the form of hydrogen sulfide (H_2S); sulfide concentrations is low as 1.0 mg/l may cause an odor problem. If the total alkalinity in the lagoon effluent is greater than 260 mg/l as calcium carbonate ($CaCO_3$), the pH will remain sufficiently high to prevent an odor problem.
5. It has been estimated that the effective life of a submerged rock filter can be as much as 20 to 30 years.
6. For periods of peak efficiency in the summer and fall, the maximum hydraulic loading rates can be 9 gpd/ft^3 (1.2 m^3/m^3/d). This should be reduced to 3 gpd/ft^3 (0.4 m^3/m^3/d) in the winter and spring.

A submerged rock filter has been designed for use in the tertiary cell of a three-cell series pond system at California, Missouri (17). The design hydraulic loading (horizontal flow) on this filter is 3 gpd/ft^3 (0.4 m^3/m^3·d). This rock filter is shown on Figure 10-14.

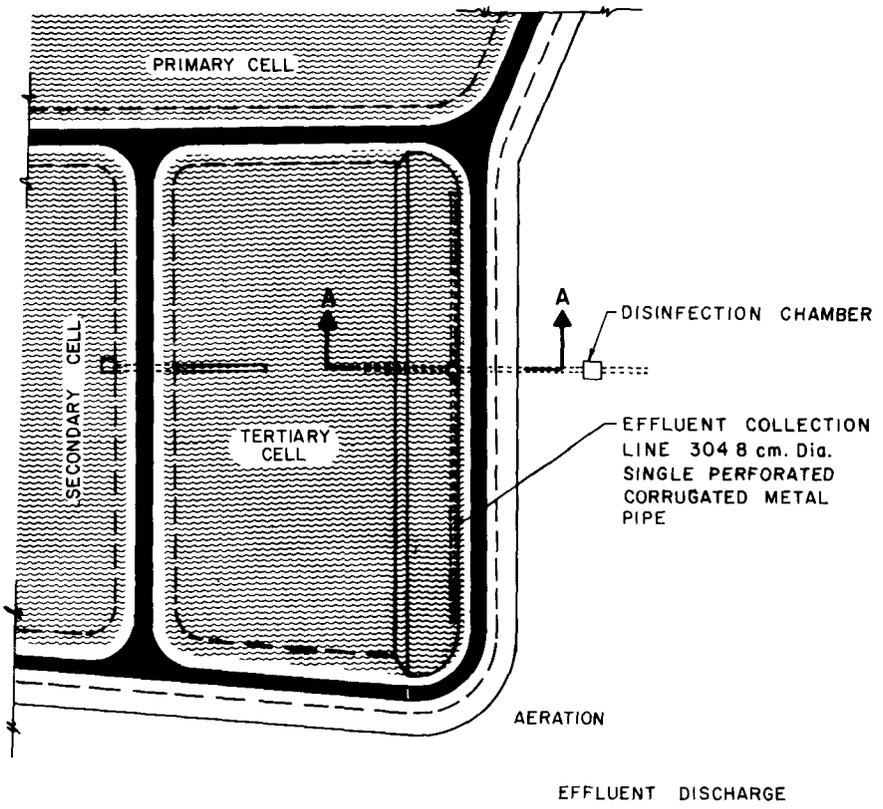

PLAN

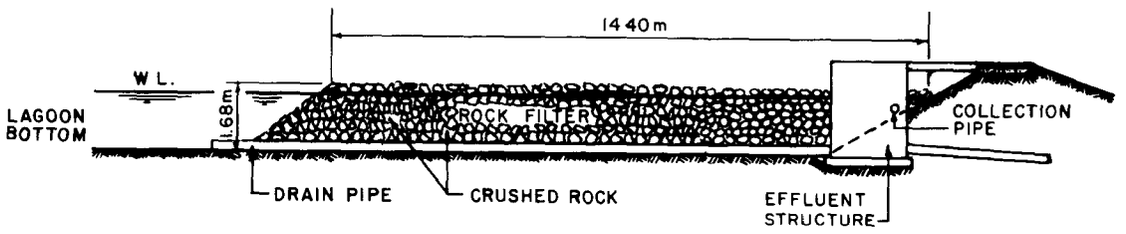

SECTION A-A

FIGURE 10-14

SUBMERGED ROCK FILTER, CALIFORNIA, MISSOURI (17)

Sedimentation ponds have been recommended by some State regulatory agencies for encouraging algal sedimentation within the pond cells. Sedimentation ponds, however, are limited in efficiency by such factors as wind mixing and algae growth. The smaller and deeper the pond, the less influence wind has on mixing. Sedimentation pond efficiency also depends on species type. Motile algae and crustaceans are not efficiently removed in such ponds. The last pond, or that part of any pond that is to serve as a sedimentation pond, should be deep (8 to 12 ft [2.4 to 3.7 m]) and designed for sludge removal at least every other year because algae develop where nutrients are released from anaerobic fermentation of a sludge layer.

10.9 Pathogen Removal

Wastewater treatment ponds remove the BOD_5, SS, and pathogens. Environmental factors that may be present in wastewater treatment ponds (32) and that may contribute to a decrease in pathogen concentration are listed as follows:

1. Aggregation and attachment to settleable solids
2. Dispersion and dilution
3. Predation by other micro- and macro-organisms
4. Bacteriophage, when present
5. Sunlight, increasing complex algal populations
6. Unavailability of essential nutrients
7. Anaerobic pretreatment
8. Higher temperatures
9. High pH

To produce an effluent meeting secondary requirements in the removal of coliforms, reductions on the order of 99.99 to 99.999 percent are necessary. Although such reductions are not usually possible in single ponds, they are attainable in series pond systems, particularly if each pond is baffled to more nearly achieve plug flow characteristics (3), and each cell outlet is baffled to prevent wind mixing and provide a sufficiently sized quiescent area for maximum separation. The efficiency of fecal bacterial removal is reduced by recirculation from the last pond to the first pond of a series. If plug flow conditions exist in aerobic ponds, the efficiency of fecal bacterial removal between 5° C and 20° C (35° F and 43° F) is given by the following equation (4):

$$N_e/N_i = e^{-kT}$$

where

N_e = Initial fecal bacterial concentration, MPN

N_i = Effluent fecal bacterial concentration, MPN

e = 2.72

$$k_T = 2.6 \cdot 1.19^{(T-20)}$$

When the lower depths become anaerobic in the summer or the temperature is near 0° C (32° F), the efficiency of removal is reduced.

To meet effluent requirements, it is frequently necessary to disinfect pond effluent by treatment with chlorine. Excessive chlorine results in degradation of any algal cells present, thus increasing the BOD. Chlorine doses in excess of 2.0 mg/l significantly increase the BOD (18) (43). Therefore, it is usually better to increase the actual (not the theoretical) detention time and hold the chlorine concentrations to below 2.0 mg/l, if microbial cells have not been removed prior to chlorination. For further information on disinfection, see Chapter 15.

10.10 Construction and Maintenance Costs

Only general efficiency data are available, based on performances of stabilization ponds designed to meet State standards. Average data for ponds are sparse and do not differentiate among conventional, single-, or dual-celled ponds and the better designed ponds. These latter systems may have multiple units in series, with each unit designed to minimize short circuiting, outlets designed to withdraw pond effluent relatively free of microbial cells, and sufficient operational storage to discharge only when reasonably cell-free effluent is available. Because the inefficient pond records are included, average reported effluent quality is generally worse than it should be.

Relative construction costs for different types of treatment facilities in the United States are shown in Figures 17-1, 17-2, and 17-4. Relative operation and maintenance costs are listed in Table 10-11. Other experience indicates that the operation and maintenance costs of facultative ponds are about one-half that of aerated facultative ponds and about one-fifth that of extended aeration systems.

TABLE 10-11

OPERATION AND MAINTENANCE RELATIONS IN THE FORM $Y = aX^b$ (33)

Type of Treatment Facility	Value for a	Value for b
Waste Stabilization Ponds	17.38	-0.4172
Primary Sedimentation Plant	24.95	-0.2634
Activated Sludge Plant	30.10	-0.2460
Trickling Filter Plant	54.99	-0.3569

Note: Y = Operating and Maintenance cost, $/cap/yr (1968), X = Design Population, persons; a and b = constants.

10.11 References

1. Unpublished data, U.S. EPA (September 1973).

2. Amin, P.M., and Ganapati, S.V., "Biochemical Changes in Oxidation Ponds." *Journal Water Pollution Control Federation*, vol. 44, p. 183 (1972).

3. Klock, J.W., "Sequential Processing in Wastewater Lagoons." *Journal Water Pollution Control Federation*, vol. 44, p. 241 (1972).

4. Marais, G.V.R., "Faecal Bacteria Kinectics in Stabilization Ponds." *Journal Sanitary Engineering Division*, ASCE, pp. 119-139 (February 1974).

5. Hendricks, D.W., and Pote, W.D., "Thermodynamic Analysis of a Primary Oxidation Pond." *Journal Water Pollution Control Federation*, vol. 48, no. 2, pp. 333-351 (February 1974).

6. *Wastewater Treatment Ponds.* U.S. EPA Technical Bulletin, EPA 430/3-74-011 (March 1974).

7. "Treatment of Secondary Sewage Effluent in Lagoons." *Notes on Water Pollution*, no. 63, Water Pollution Research Laboratory, Stevenage, Herts, England (December 1973).

8. Thirumurthi, D., "Design Principles of Waste Stabilization Ponds." *Journal Sanitary Engineering Division*, ASCE, vol. 95, no. SA2 (1969).

9. Mangelson, K.A., and Walters, G.Z., "Treatment Efficiency of Waste Stabilization Ponds." *Journal Sanitary Engineering Division*, ASCE, pp. 407-425 (April 1972).

10. Thimsen, Donald J., *Biological Treatment in Aerated Lagoons.* 12th Annual Waste Engineering Conference, University of Minnesota (December 1965).

11. Eckenfelder, W.W., "Comparative Biological Waste Treatment Design." *Journal Sanitary Engineering Division*, ASCE (December 1967).

12. Neel, J.K., McDermott, J.H., and Monday, C.A., "Experimental Lagooning of Raw Sewage." *Journal Water Pollution Control Federation*, vol. 33, pp. 603-641 (June 1961).

13. Pierce, D.M., *Performance of Raw Waste Stabilization Lagoons in Michigan With Long Period Storage Before Discharge.* Symposium on Upgrading Stabilization Ponds, Utah State University.

14. Lewis, R.F., and Smith, J.M., *Upgrading Existing Lagoons.* Prepared for U.S. EPA Technology Transfer Seminar (October 1973).

15. Missouri Basin Engineering Health Council, *Waste Treatment Lagoons–State of the Art.* U.S. EPA Project No. 17079 EHX (July 1971).

16. Middlebrooks, E.J., and Marshall, G.R., *Stabilization Pond Upgrading With Intermittent Sand Filters.* Symposium on Upgrading Stabilization Ponds, Utah State University (November 1974).

17. O'Brien, W.J., *Polishing Lagoon Effluents With Submerged Rock Filters.* Symposium on Upgrading Stabilization Ponds, Utah State University.

18. Parker, D.S., *Performance of Alternative Algae Removal Systems.* Seminar on Ponds as a Wastewater Treatment Alternative, University of Texas, Austin (1975).

19. McKinney, R.E., *State of the Art of Lagoon Wastewater Treatment.* Symposium on Upgrading Stabilization Ponds, Utah State University.

20. McGauhey, P.H., *Engineering Management of Water Quality.* New York: McGraw-Hill (1968).

21. Oswald, W.J., and Gotaas, H.B., *Photosynthesis in Sewage Treatment.* Transactions ASCE, vol. 122 (1967).

22. *Biological Treatment Technology 162.* U.S. EPA, Municipal Permits and Operations Branch, EPA-430/1-1-73-017 (December 1973).

23. *Wastewater Engineering Collection, Treatment, Disposal.* Metcalf & Eddy, New York: McGraw-Hill (1972).

24. Brown and Caldwell, *Upgrading Lagoons.* U.S. EPA, Office of Technology Transfer Seminar Publication. (August 1973).

25. Uhte, W.R., *Construction Procedures and Review of Plans and Grant Applications.* Symposium on Upgrading Stabilization Ponds, Utah State University.

26. Barsom, G., *Lagoon Performance and the State of Lagoon Technology.* EPA-R-2-73-144 (June 1973).

27. Standar, G.J., Meiring, P.G.J., Drews, R.J.L.C., and VanEck, H., *A Guide to Pond Systems for Wastewater Purification.* Presented at Jerusalem International Conference on Water Quality (June 1968).

28. Papers from 2nd International Symposium for Waste Treatment Lagoons, Kansas City, Missouri (1970).

29. *Recommended Standards for Sewage Works.* Great Lakes-Upper Mississippi River. Board of State Sanitary Engineers (1971).

30. *Design Guides for Biological Wastewater Treatment Processes.* U.S. EPA Water Pollution Control Research Series, Project No. 11010 ESQ (August 1971).

31. Murphy, K.L., and Wilson, A.W., "Characterization of Mixing in Aerated Lagoons." *Journal Environmental Engineering Division*, ASCE (October 1974).

32. Gloyna, Ernest F., *Wastewater Stabilization Ponds.* World Health Organization (1971).

33. *Process Design Manual for Upgrading Existing Wastewater Treatment Plants.* U.S. EPA, Office of Technology Transfer (October 1974).

34. Gearhart, R.M., "Aeration Proves Efficient." *Water and Wastes Engineering* (June 1972).

35. Potter, A.H., "Maturation Ponds." *Water Research*, vol. 6, Great Britain: Permagon Press, pp. 781-795 (1972).

36. O'Brien, W.J., McKinney, R.E., Turvey, M.D., and Martin, D.M., "Two Methods for Algae Removal." *Water and Sewage Works* (March 1973).

37. Kothandaraman, V., and Evans, R.L., "Removal of Algae From Waste Stabilization Pond Effluent." *Illinois State Water Survey Circular 108* (1972).

38. Golueke, C.G., and Oswald, W.J., "Harvesting and Processing Sewage Grown Algae." *Journal Water Pollution Control Federation*, vol. 37 (4), pp. 471-498 (1965).

39. Middlebrooks, G.J., et al., *Evaluation of Techniques for Algal Removal From Wastewater Stabilization Ponds.* Review paper PR JEW 115-1, Utah Water Research Laboratory (January 1974).

40. Marshall G.R., and Middlebrooks, E.J., *Intermittent Sand Filtration to Upgrade Existing Wastewater Treatment Facilities.* Utah Water Research Laboratory, PR JEW 115-2 (February 1974).

41. *Process Design Manual for Suspended Solids Removal.* U.S. EPA, Office of Technology Transfer (January 1975).

42. Hom, L.W., "Kinetics of Chlorine Disinfection in an Ecosystem." *Journal Sanitary Engineering Division,* ASCE (February 1972).

43. Ramani, R., *Design Criteria for Polishing Ponds.* Seminar on Ponds as a Wastewater Treatment Alternative, University of Texas, Austin (1975).

CHAPTER 11

FILTRATION AND MICROSCREENING

11.1 Introduction

Granular media filtration and microscreening are used as effluent polishing techniques in treatment plants to increase BOD and SS removal. Direct granular media filtration of a good quality secondary effluent (BOD_5 and SS less than 25 mg/l) will produce an effluent having BOD_5 and SS in the range of 5 to 10 mg/l. With chemical treatment (e.g., phosphorus removal) followed by sedimentation and granular media filtration, a secondary effluent having a BOD of about 5 mg/l or less and SS of 1 to 2 mg/l can be obtained. Suspended solids in effluents can also be reduced by means of mechanical strainers, such as the rotating drum microscreen. Reference is made to EPA Process Design Manual(s) *Suspended Solids Removal* and *Upgrading Wastewater Treatment Plants* (1) (2).

11.2 Types of Granular Media Filters and Their Operation

Different filter configurations most commonly in use now are shown on Figure 11.1.

11.2.1 Downflow Type

The most common type of granular media filter is the downflow filter, with either single-, dual-, or multimedia, represented as (a), (c), and (d) in Figure 11-1. Older designs of these filters use a single medium, usually sand. During backwashing of the filters, the medium becomes graded; fine grains are on top and coarse grains at the bottom. Filtration, therefore, is from fine to coarse.

With two different density media, such as coal and sand, the filtration can range from coarse to fine. This method of wastewater filtration is the preferred one, and is frequently called "in-depth" filtration. Because of the large amount of SS and the presence of organic flocs, single-medium filters tend to clog rapidly as a result of the accumulation of solids in the top layer of the filter.

These filters can be designed to operate with a gravity head, in which case the tank or basin containing the filter media is usually open (as shown in Figure 11-2). However, pressure filters are frequently used for the smaller capacities (as shown in Figure 11-3), because they may be more economical. Pressure tanks are usually vertical for plant capacities up to 1 mgd and horizontal for larger capacities. Because pressure filters can operate at higher head losses (frequently up to 20 ft) than gravity filters, the length of filter runs between backwashings can be substantially increased. In addition, if another process (e.g., adsorption in activated carbon columns) follows filtration, the backwash water from pressure filters can be discharged to a point above the filter elevation without repumping.

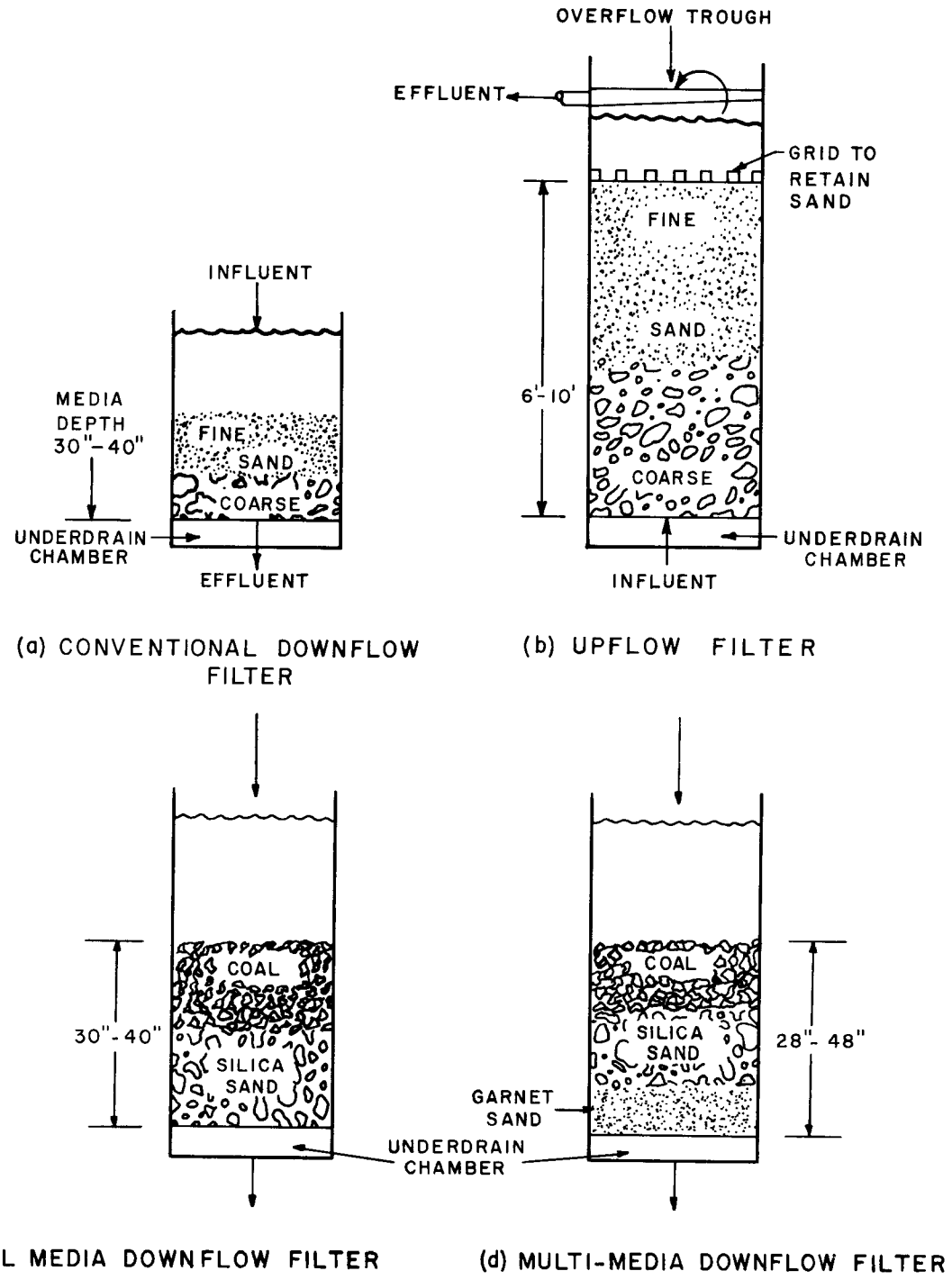

FIGURE 11-1

FILTER CONFIGURATIONS

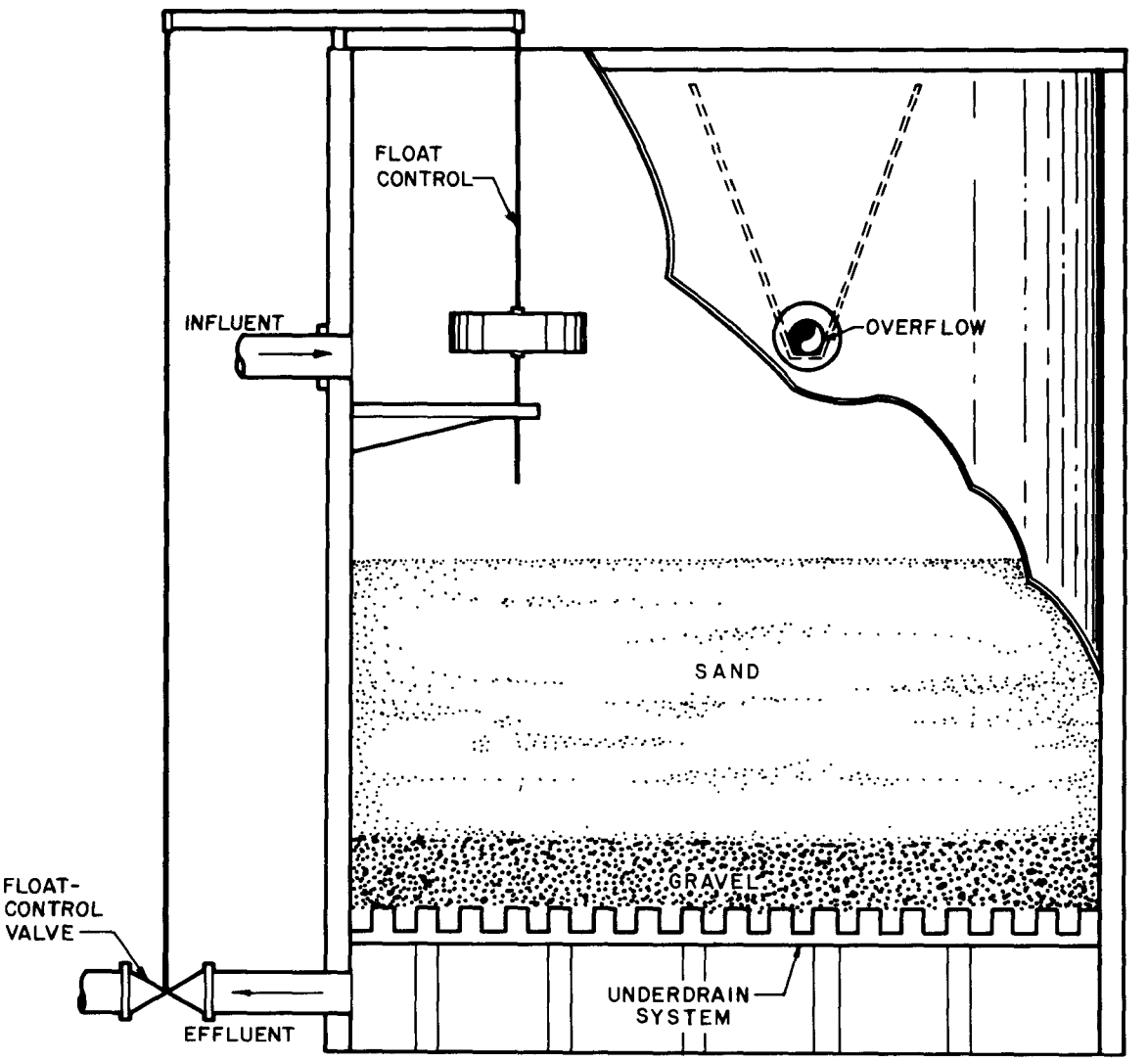

FIGURE 11-2

GRAVITY FILTER WITH FLOAT CONTROL

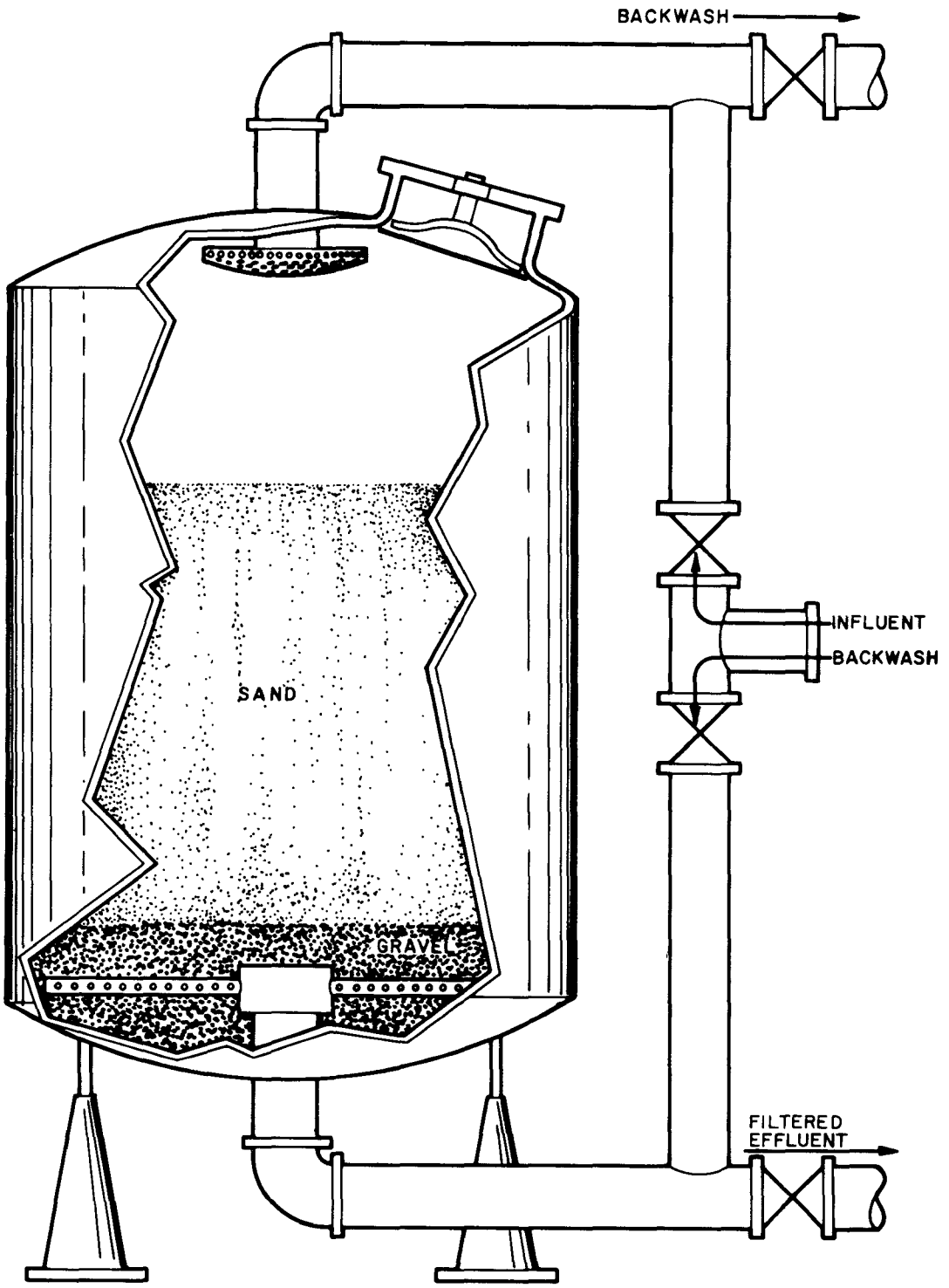

FIGURE 11-3

PRESSURE FILTER

11.2.2 Upflow Filters

Upflow filters were first used in Europe to obtain in-depth filtration. The filtration is from coarse to fine media, using a single density material. (A typical design is shown in Figure 11-4.) The filter has been used primarily for removing above-average concentrations of SS, usually in the range of 20 to 100 mg/l. Studies have shown that a filter of this design, having a depth of 6 ft (1.8 m) and a medium effective size of 1.8 to 0.95 mm, could produce an effluent having a turbidity of 2 to 40 mg/l (given an influent having a turbidity of 10 to 280 mg/l) (3). If a polyelectrolyte is added to the raw water, the turbidity is reduced to 1 mg/l or less. The filtration rate is 6 gpm/ft^2.

To prevent fluidization of the sand bed, a grid is installed at the top of the bed. For backwashing, the resistance of the grid to fluidization is destroyed by an initial agitation of the bed with air.

The upflow filter has been used in several installations in England for tertiary treatment of effluent from biological treatment plants (4). Additional studies on upflow filtration have been reported by McKinney and Hamann (5).

11.2.3 Media Type and Configurations

Until recently, the granular media filter, as used for potable water filtration, had a single medium (usually sand) with an effective size (ES) of about 0.50 to 0.74 mm and a uniformity coefficient (UC) of 1.5 to 1.8. The ES of a filter medium is defined as the size (measured in millimeters) for which 10 percent by weight of the material is finer and 90 percent is larger. The UC is the ratio of the size for which 60 percent by weight is smaller to the ES. As the UC approaches 1.0, particle sizes become more uniform. If a single-medium filter is backwashed and the bed fluidized, the finest particles collect at the top of the bed. In such filters, the solids removed from the water are usually retained in the top few inches of the bed. In recent years in the United States, and for many years in Europe, the filter media utilized promote solids accumulation throughout a large portion of the filter depth, thus permitting the removal of more solids from the water and the use of higher filtration rates.

Coarse media (1 to 2 mm ES) and deeper beds are frequently used. To prevent rapid clogging of the top layer of the bed, the filter bed is arranged so that coarse media are above (or first in the direction of filtration) and finer media below (or last in the direction of filtration). This is made possible by use of dual-, tri-, or multimedia filters, with the top layer being the lowest density material (e.g., anthracite coal on top of sand). The upflow filter has filtration from coarse to fine with a single medium (normally silica sand).

By proper selection of the media sizes and their UC, it is possible to obtain any desired amount of intermixing of the different media in dual- and multimedia filters. There is some evidence (inconclusive) that intermixing is beneficial (6) (7).

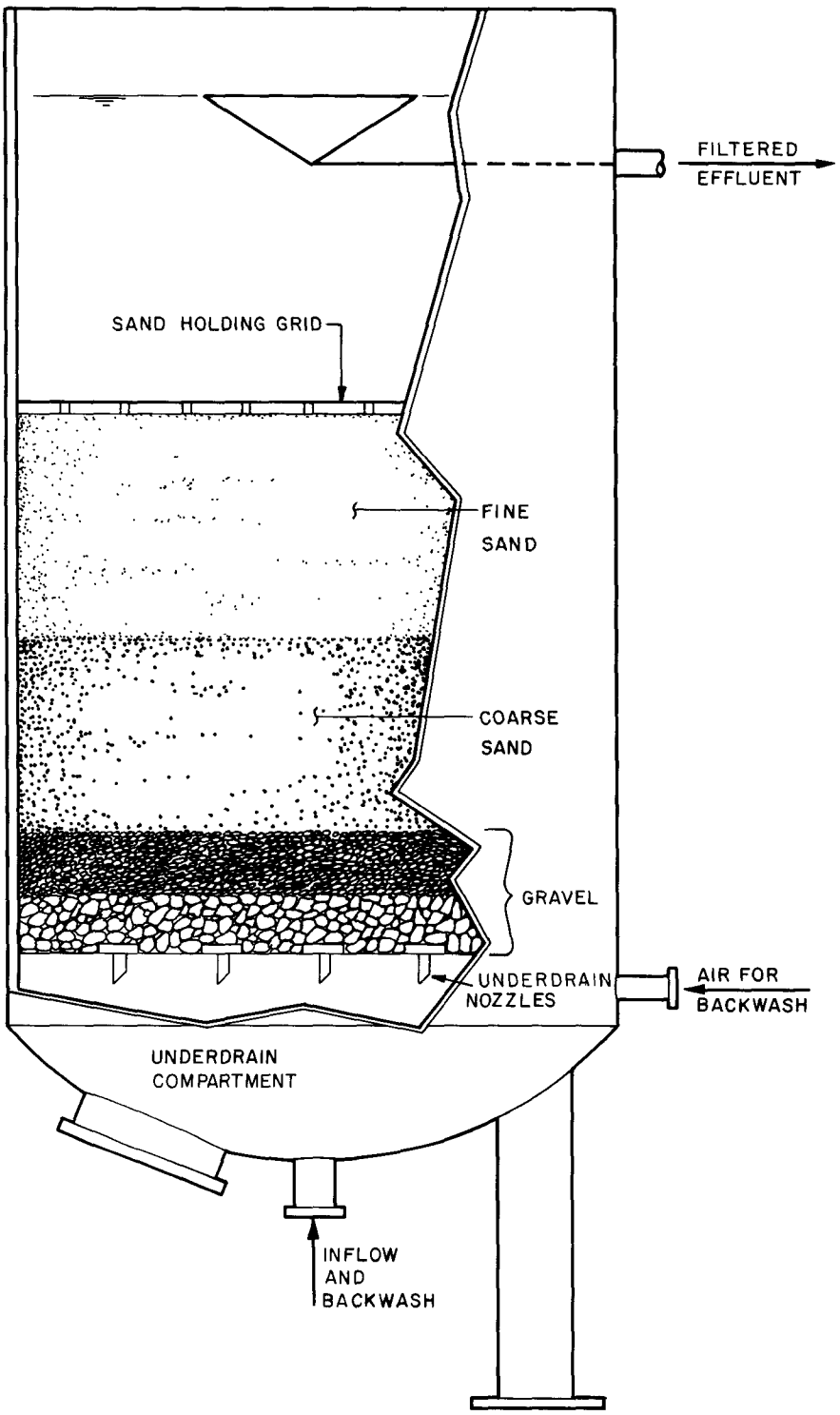

FIGURE 11-4

UPFLOW FILTER

The normal filter media depths are 24 to 36 in. (0.6 to 0.9 m). However, for filtering wastewaters having SS in the range of 25 to 100 mg/l, deeper beds are used with coarser media, to provide the necessary volume for solids accumulation and thus insure filter runs of reasonable length (e.g., 8 to 24 hr) (8).

For wastewater filtration, and with downflow filters, the dual- or multimedia filter should be used, because of the inherent advantages for removal of a larger amount of suspended solids.

11.2.4 Backwashing

Granular media filters have been traditionally cleaned by an upward flow of water, which fluidizes the filter bed. In European potable water treatment plants, it has been standard practice to use a combination air and water wash; such designs have been adopted in many newer water supply treatment installations in the United States.

Wastewater filters usually receive higher solids loads, which adhere more tenaciously to the filter media. It is, therefore, generally accepted that some sort of auxiliary scouring methods or devices are essential to obtain adequate cleaning of wastewater filters.

The other auxiliary cleaning method is surface wash, using either fixed or rotating high pressure water nozzles. The nozzles are located about 1 to 2 in. above the top of the bed. Normally, while the surface wash is on the upflow, one backwash rate is set lower after the surface wash is terminated. With the deeper penetration of solids into the dual- and multimedia filters, surface wash has been found inadequate to thoroughly clean the lower portions of the bed.

Air wash, therefore, is now being adopted for most wastewater filters. Studies (9) have shown that the most powerful filter cleaning method is a concurrent wash with air and water above fluidization velocity, followed by a normal air scour and subsequent water wash.

11.2.5 Flow Control

Potable water filters usually have elaborate flow-control systems, to maintain a constant flow through a filter as it becomes clogged. It was believed that good solids removal necessitated constant rate operation of a filter; however, it has been shown that gradual changes in filtration rate are not detrimental to filter effluent quality. In fact, sudden changes in flow rate, such as can occur with automatic flow controllers on filter effluent lines, cause solids breakthrough and poorer effluent quality (10). The use of filter effluent flow controllers, which are responsive to the flow differential produced by a venturi or orifice and are manually or automatically set for a certain constant flow, is not normally required or practical for wastewater filters. Such control systems require considerable maintenance and serve no useful purpose regarding effluent quality.

If two or more filters are installed (as they usually are), the total flow may be equally split between the operating filters. Without flow controllers, the water level above the filter media in each filter will depend on the cleanliness of the filter; this level is highest in the filter having the largest head loss. To prevent the water level from dropping below the top of the filter bed, the filters discharge into a storage basin through an effluent box, where the water level is maintained constant by an overflow weir.

Another arrangement that can be used if the flow is equally split among several filters is that shown on Figure 11-2. In this case, the water level above the filter is maintained essentially constant by a valve in the filter effluent line actuated by the water level above the filter. The valve opening for any filter in operation will depend on the degree of filter clogging.

Another filter flow arrangement particularly applicable to wastewater filtration if wide variations in daily flow are encountered (e.g., in smaller plants) is "variable declining rate filtration," described in reference (10). In this arrangement, no control valves are used and the filtration rate through any filter depends on how dirty it is; that is, on loss of head.

The various filters are connected to a large influent flume or conduit having negligible head loss. There is, of course, an influent valve to each filter, so it can be taken out of service for washing. The filters discharge into a common storage basin over a weir, located to prevent the water level from dropping below the filter bed when the filters are in operation. Sufficient height is provided in the filter box above the media to obtain a reasonable filter run before a filter must be taken out of service for washing. Distribution of the inflow depends on the condition of any individual filter; for example, the cleanest filter has the highest rate. The water level is the same in all filters in operation. When a filter is taken out of service, the flow is redistributed among the other filters, with a gradual increase in their filter rate. Despite rate of inflow changes, there are no abrupt changes in filtration rates.

The above flow-control schemes are applicable to gravity filters. Usually, for pressure filters, the filter influent is centrifugally pumped and the flow to individual filters is controlled by flow control devices. A flow and head loss indicator on each filter shows the operator the condition of each filter. Manufacturers of pressure filters can supply all the needed appurtenances and equipment for automating such installations to a high degree, if desired.

11.3 Design of Granular Media Filter Installations

11.3.1 Pretreatment

Direct filtration of secondary plant effluent can produce a final effluent having SS of 5 to 10 mg/l. Direct filtration generally will reduce SS by about 70 percent, with influent SS below 35 mg/l (11). Coagulation with an aluminum or iron salt and/or a polymer, followed by settling, can reduce the load on filters and produce effluents with SS below 5 mg/l. Pretreatment ahead of filters is the principal influence on filter performance, because it affects the characteristics of the solids applied to a filter.

To avoid the cost of a clarification basin, coagulation with alum or an iron salt is sometimes employed directly ahead of filtration without any settling. The chemical is mixed with the secondary effluent, flocculated in a 10- to 15-minute basin, and filtered. Such coagulation can also be done with organic coagulants (polymers). If coagulation is practiced ahead of filters without any settling, the filters should have coarser media at the top (for downflow filters); also, the filter should be deeper to accommodate the increased amount of solids removed.

Chlorination ahead of wastewater filters is recommended, to control the growth of slimes on the filter walls, in the media, and in the underdrain system. In some cases, it has been found that continuous chlorination is not needed and that high dosages on an intermittent, short-term basis are effective. About 30 to 50 mg/l of chlorine for a short period (2 to 3 hr as needed) are adequate.

11.3.2 Filtration Rate and Head Loss

Filtration rates for the various types of filters will range from 2 to 8 gpm/ft^2 (81.4 to 325.6 l/m^2·min), depending on the SS in the wastewater, the size of media, and the desired quality of filtered effluent. The length of the filter run before washing will depend on the above factors and the terminal head loss. For gravity filters, it is customary to design for an available head loss of about 6 to 10 ft (1.8 to 3 m). With pressure filters, higher head losses are generally used.

Filtration rate and head loss control the length of run. Usually, the filter run is terminated when the head loss reaches some predetermined value. However, it has become usual practice in recent years, especially when for in-depth filtration, to control the length of a run by monitoring the effluent SS with a calibrated turbidimeter. With coarse media, deep filters, the head loss may not be a good criterion for filter washing. Solids breakthrough is, of course, a direct indication of when to terminate a filter run.

It is not possible to predict the proper filter rate, effluent quality, length of run, and head loss development for a given filter media, depth, and wastewater SS. Pilot plant studies are necessary to establish proper design data. Some typical pilot plant data are shown in Figure 11-5. Such data can be obtained for a pilot filter over the range of parameters shown, if the filter is producing an effluent having SS below the desired limit.

For small treatment plants, pilot plant studies may not be practical or justifiable, particularly if the wastewater is from solely domestic sources. In that case, designs will be based on previous experience; they must, however, be conservative.

The inflow rate for which filters should be designed is the maximum 24-hr flow, if 24-hr filter runs are planned. Hourly variations in flow will balance over the day. However, if 8-hr filter runs are planned, the peak 8-hr flow should be used in sizing filters for the filter rate selected.

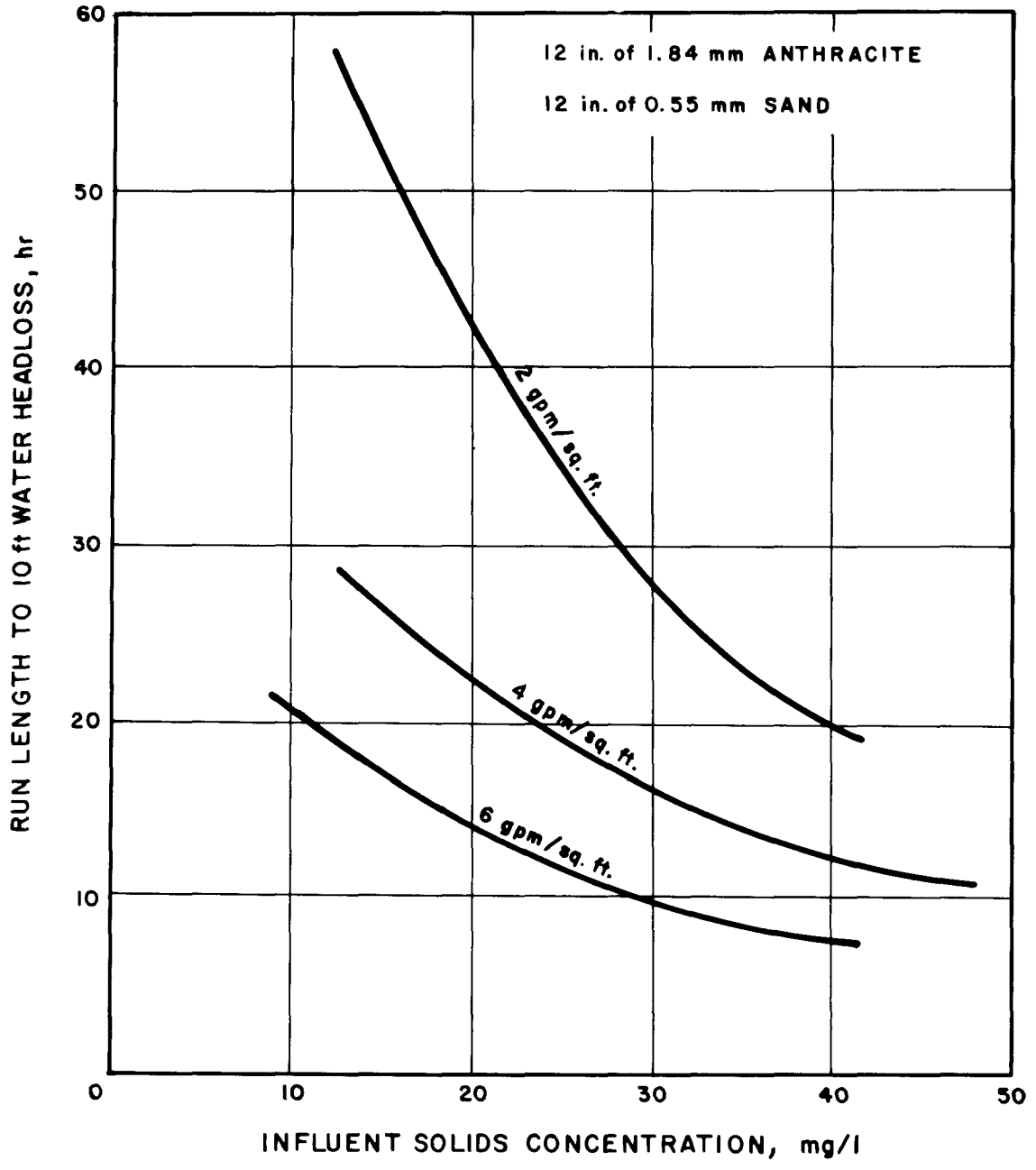

FIGURE 11-5

RUN LENGTH VS. INFLUENT SS CONCENTRATION AT VARIOUS FLOW RATES

11.3.3 Media Size and Configuration

The granular media used in water and wastewater filtration are silica sand, anthracite coal, and garnet sand. Their specific gravities are as follows:

Silica Sand	2.65
Anthracite Coal	1.35-1.75
Garnet Sand	4.0-4.2

When media are used with the above specific gravities in filters, and when proper selection of particle sizes is made, after backwashing with water, the coarse, lighter coal will be on top, the heavy, fine garnet at the bottom, and the silica sand between the two.

The use of coarse-to-fine media filtration is important for handling the type of solids present in wastewaters—particularly those of organic nature, which tend to be removed in the top layers because of their particle strength and adhering characteristics. The coarse medium on top allows the solids to be captured in the entire depth of, for example, a coal layer on top of sand in a dual-media filter. The fine sand layer serves as a polishing filter bed. Such in-depth filtration permits removal of a larger total amount of solids before backwashing is required.

Normal domestic wastewater filtration of secondary effluents or after coagulation and settling can be best accomplished in coal-sand filters. The coal size should be between 1 and 2 mm, with an ES of 1.0 to 1.2 mm. To eliminate excessive intermixing of the coal and sand, the effective size of the sand should be about one-half the coal, or 0.55 mm. The UC should be less than 1.65. With media of these sizes, the entire bed will be fluidized at the same backwash rate.

Although the depth of the filter must be established, the only reasonable method for determining the optimum value is pilot plant operation. In normal domestic wastewater filtration (as indicated previously), for dual-media filters the coal layer should be 15 to 20 in. (380 to 500 mm) and the sand layer 12 to 15 in. (305 to 380 mm).

Deep beds of a single coarse medium (usually sand) have been used for obtaining large solids storage, to facilitate handling high concentrations (50 to 100 mg/l) of SS with filtration only.

The medium size ranges from 2 to 3 mm; the bed depth from 4 to 6 ft. Frequently, the filtration rate for such filters ranges from 10 to 30 gpm/ft^2 (408 to 1,220 l/m^2·min). In a recent investigation of SS removal from an activated sludge treatment plant effluent (12), it was found that SS of up to 60 mg/l were reduced to less than 10 mg/l by such filters.

11.3.4 Backwash Systems

Backwashing wastewater filters is more difficult than backwashing the usual potable water filters, because the solids removed are greater in quantity and they tend to adhere more to the filter media. It is generally agreed that auxiliary scouring devices or other methods are necessary to adequately clean wastewater filters. Such auxiliary scouring is accomplished by surface wash arrangements or by use of air wash in conjunction with water wash. Air-wash systems in wastewater filters are strongly recommended because, in addition to providing the necessary scouring action, the air provides aeration and limits anaerobic conditions (which can develop in wastewater filters).

The backwash water rate should fluidize the filter bed completely and expand it by at least 10 percent. Excessive bed expansion has not been found to be beneficial for proper cleansing of the filter media. The required backwash rate will depend on the size and type of media and the water temperature. For water at about 20° C, the dual-media filter described in section 11.3.3 will require a backwash rate of about 22 gpm/ft^2 (895.4 l/m^2·min).

Filter underdrain systems are designed to provide as uniform a distribution of wash water over the filter area as possible.

One system used extensively in potable water filtration consists of a central manifold pipe, or conduit, and lateral piping with orifices directed downward. The manifold and laterals are covered with 1) coarse gravel, 2) layers of fine gravel on top, and 3) the filter media.

Several proprietary false bottom arrangements are available (Wheeler and Leopold), which replace the manifold and lateral piping. Gravel is placed on top of the false bottom. Difficulties have been encountered with underdrain systems employing gravel, because higher backwash rates have caused displacement of the gravel with resultant nonuniform wash water distribution.

In recent years, an underdrain system that has come into frequent use has a false bottom of concrete or steel in which specially designed nozzles or strainers are installed on about 6-in. (152.4-mm) centers. These nozzles, or strainers, are usually made of plastic materials, which are resistant to high and low pH and to chlorine (Figure 11-6). These strainers eliminate the need for gravel, because the openings are smaller than the filter media.

This system is easily adapted to air-water wash operation, because, by use of an extension tube on the strainers, which project into the chamber below the false bottom, it can be used for distributing only air or air and water simultaneously. The only problem that such strainers may present for wastewater filtration is that the backwash water may have some suspended matter resulting from biological growths in the backwash storage tank, which could cause partial clogging of the small openings in the strainers. Also, biological growths may occur in the strainers themselves. Adequate chlorination ahead of the filters should control such growths.

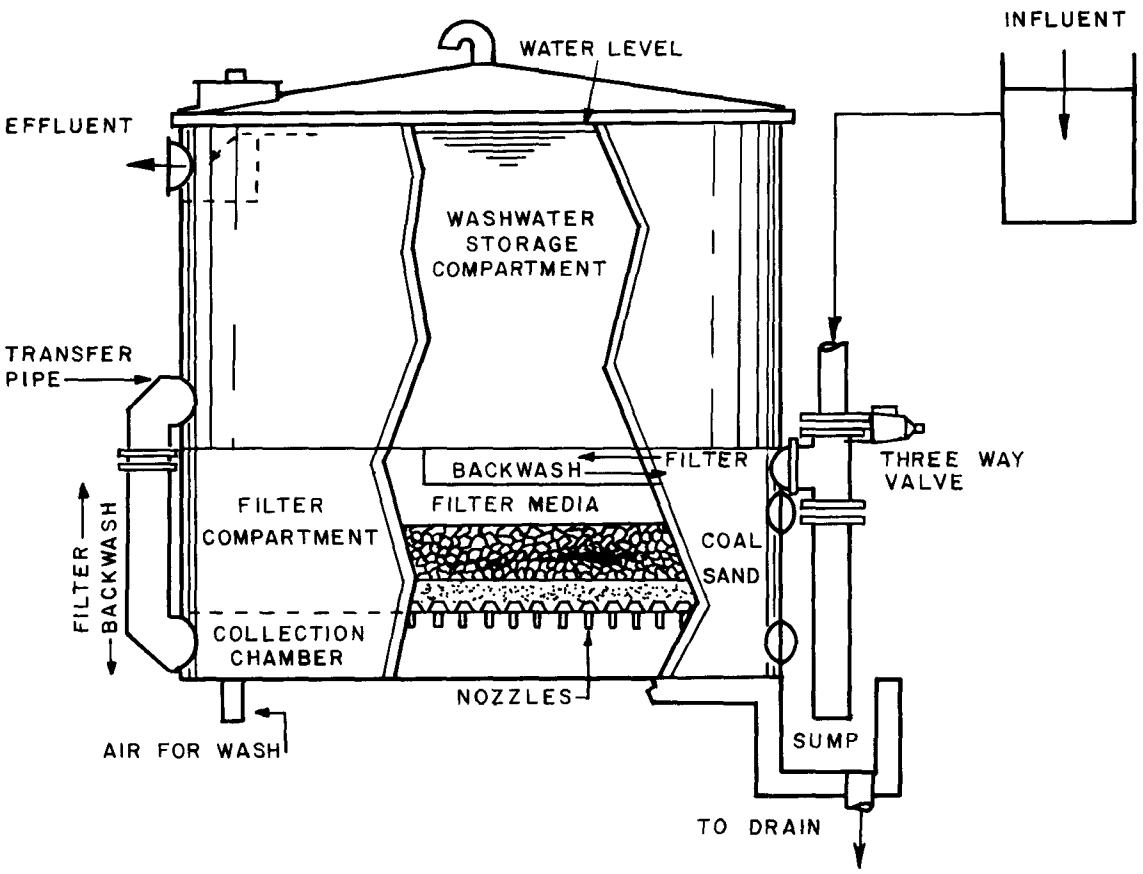

FIGURE 11-6

AUTOMATIC GRANULAR MEDIA FILTER

Air can also be introduced through a separate manifold-laterals-orifice system located just above a gravel bed. It is not good practice to introduce the air below the gravel, because air can easily displace gravel.

The amount of air used in air wash systems is about 3 scfm/ft^2 (15.3 l/s/m^2) of filter area. Normal backwashing with air and water consists of 1) draining the filter to the top of the media, 2) turning on the air for 3 to 5 minutes, 3) turning on the water wash approximately one-half the fluidizing rate for about 2 minutes, and 4) shutting off the air and completing the wash at the maximum water wash rate.

The backwash cycle is started either manually or automatically when the head loss across the filter reaches some predetermined value or the filter effluent turbidity reaches a preset value, as determined by a continuously monitoring turbidimeter.

To have water available for backwashing, some storage must be provided. The volume depends on the number of filters that will be washed in sequence. As a minimum, there should be a volume sufficient to wash two filters consecutively. The backwash water can be supplied by backwash pumps or by gravity from a storage tank.

Preengineered modular design filters that incorporate stored backwash water (Figure 11-6) are available. These filters are so designed and automated that, after a preset head loss has developed, the filter goes into its backwash cycle using the stored water. Air wash can be incorporated in these units. After the wash cycle, the filter reverts to the filter cycle and the initial flow fills the storage compartment. These units require minimal operator attention; however, there is no simple way to prolong the backwashing, if the normal backwash period does not adequately clean the filter.

Another automatic backwash filter design used extensively in water treatment plants is the traveling backwash assembly (Figure 11-7). The filter bed in these filters normally has a depth of about 10 to 12 in. (0.25 to 0.30 m) and is divided into many sections about 8 in. (0.2 m) wide. The backwash assembly moves from section to section, cleaning each in sequence. The backwash pump mounted on the assembly takes filtered water from the effluent flume. The system is highly automated; backwashing is started when the loss of head is about 1 to 2 in. (25 to 50 mm). Basically, only a small amount of solids is allowed to accumulate in the filter before the media are cleaned. This filtering system does not require any separate backwash water storage, pump, piping, or controls. The total power requirement for a filter bed area of 1,760 ft^2 (164 m^2) is that of a 5-hp (3.7 kW) motor. This system has recently been adapted to an activated carbon bed filter having a bed depth of 4 ft (1.2 m) (13). Such a system would be applicable to polishing wastewater effluent by removing COD and suspended solids.

The backwash water should be sent to a holding tank for equalization and pumped back to the biological or chemical treatment facility preceding the filters. To eliminate the need for separate solids removal facilities, the holding tank should be agitated with diffused air or by a mechanical mixer to keep the solids in suspension. To insure that the suspended solids in the washwater are captured, it must be given the same treatment ahead of filtration the wastewater receives.

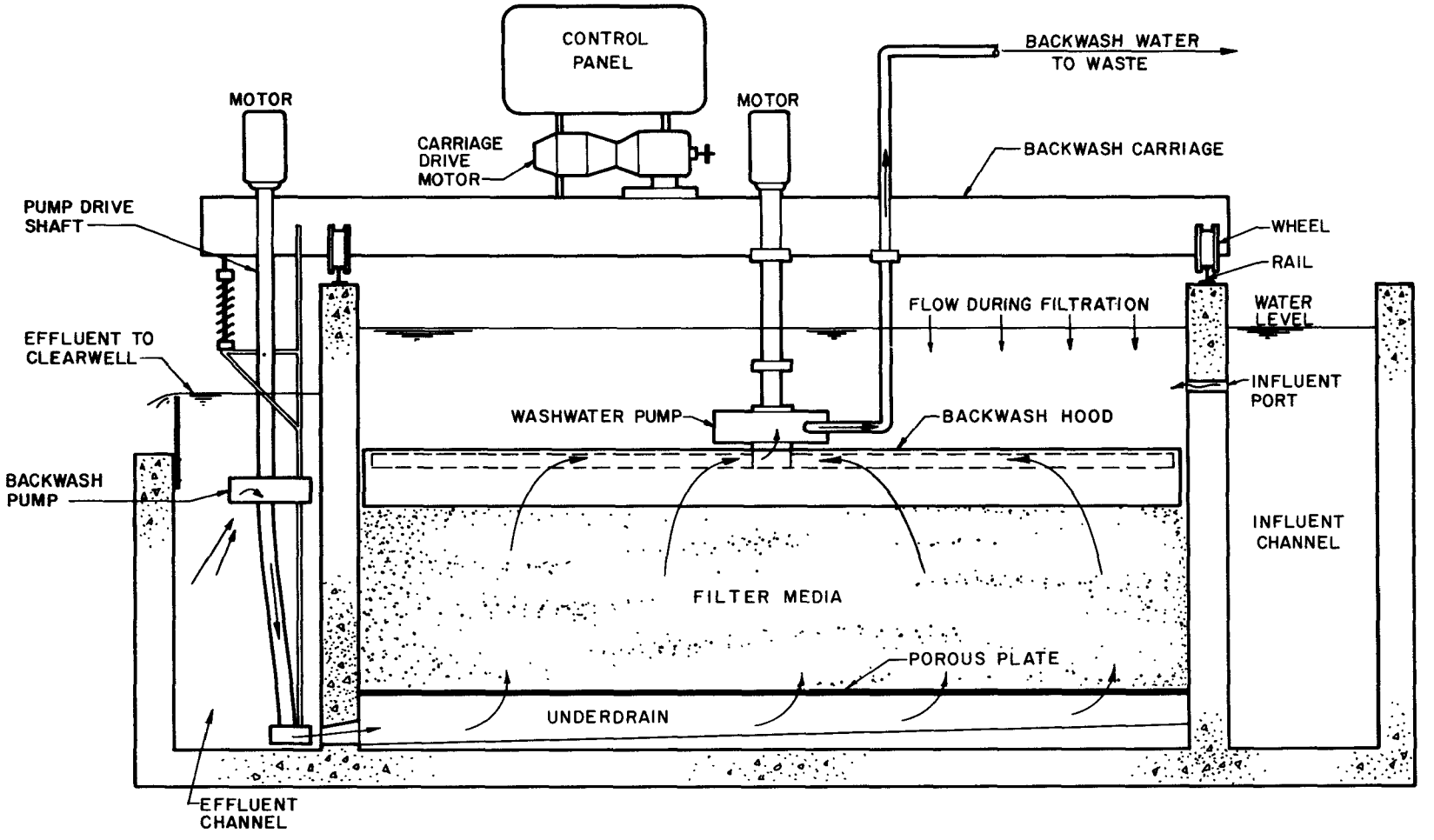

FIGURE 11-7

AUTOMATIC BACKWASH FILTER

The backwash water will normally average about 2 to 5 percent of the wastewater flow, depending on the SS the filters remove. Deep bed, coarse media filters, removing up to 100 mg/l SS will have backwash water requirements of 5 to 10 percent of the wastewater being treated.

11.4 Sand Beds (Intermittent Filtration)

Effluents from small treatment plants, especially package type plants, are frequently applied to outdoor sand filters, which insures a higher degree of treatment and removal of most of the SS. Smaller plants may frequently be upset, with a resultant increase in SS discharge. The design of these filters is similar to the intermittent sand filters frequently used in the past for biologically treating settled wastewater (14).

Such filters should be drained with open joint or perforated tiles, of at least 4 in., laid on an impervious layer. The sand depth should be about 30 to 36 in. (0.75 to 0.90 m); sand should be graded, with an effective size between 0.3 and 0.5 mm. Although the flow to such filters may be continuous in remote installations, the proper operation for effective treatment is to have two, and preferably three, filter beds. The flow is directed to one filter for 24 hr. That filter is allowed to drain and dry for 1 to 2 days, and the flow goes to an adjacent filter. A 3-day cycle produces good operation and treatment.

The loading rate over a 24-hr period of settled secondary effluent can be about 500,000 gpad (490,000 $m^3/m^2 \cdot d$), or about 10 gpd/ft^2 (0.5 $m^3/m^2 \cdot d$). Filtered effluent will normally have a BOD of 5 to 10 mg/l and SS of 5 to 10 mg/l.

The solids that have accumulated on top of the sand are periodically removed, together with the top sand layer, and disposed of. Operation in below freezing climates can create problems, especially if operation is continuous flow, instead of intermittent. Plowing the top of the bed into ridges and furrows about 12 to 18 in. (0.3 to 0.45 m) deep has been found beneficial in keeping the top layer of sand from freezing and in keeping the bed pervious.

Studies (15) were recently conducted in Logan, Utah, on using intermittent sand filters to filter the effluent from stabilization lagoons, to remove the suspended matter and upgrade the effluent to meet the regulatory agency BOD_5 standard of 5 mg/l. This effluent quality was achieved at hydraulic loadings in the range of 400,000 to 800,000 gpad (392,000 to 784,000 $m^3/m^2 \cdot d$). It was concluded that, for an average loading of 500,000 gpad (490,000 $m^3/m^2 \cdot d$), the filters would operate approximately 100 days before cleaning would be required, if receiving a lagoon effluent with an average SS concentration of 20 mg/l. Cleaning consists of removing the top layer of sand; eventually, new sand must be added.

11.5 Microscreening

A microscreen unit consists of a motor driven rotating drum, covered with a microscreen medium, mounted horizontally in a rectangular channel (Figure 11-8). The wastewater enters the drum through one end and passes out through the screen, with the SS being retained on the inner surface of the screen. Pressure jets of plant effluent are directed down

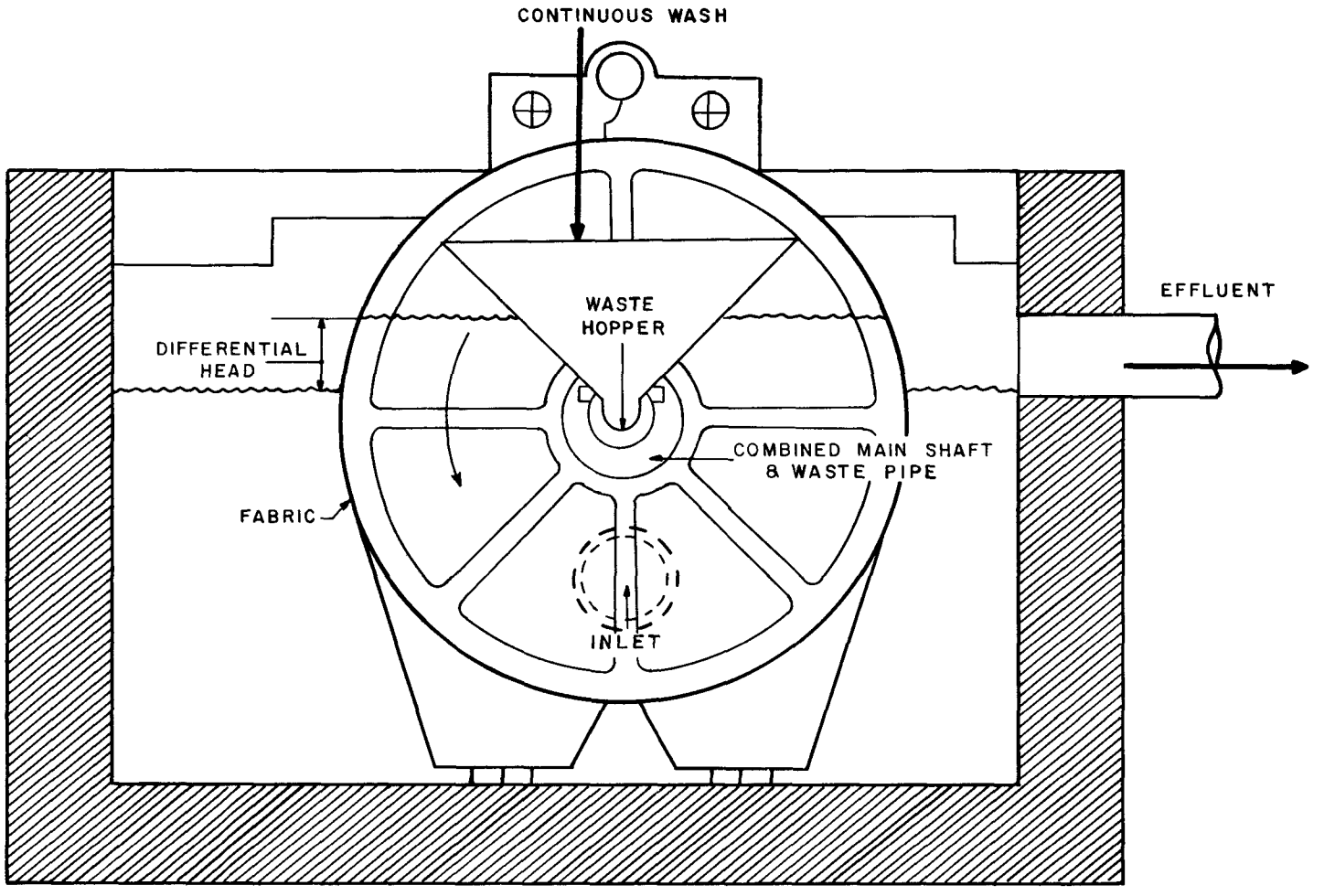

FIGURE 11-8

SCHEMATIC DIAGRAM OF MICROSCREEN UNIT

onto the screen, to remove the deposited solids on the inside of the drum. The washwater and removed solids are captured in a washwater hopper and conducted to a point outside the drum. The washwater must be recycled upstream to the point where the main portion of the solids are removed from the wastewater being treated. In a biological plant, it should be recycled to a point ahead of the aeration basins or trickling filter (e.g., to the primary settling basin). If the microscreen follows a chemical treatment process, the washwater should be returned ahead of the point of chemical addition to the wastewater.

Biological growths on the microscreen are controlled by periodic treatment with a chlorine solution. In some cases, placing ultraviolet lights above the screen medium has been effective in controlling growths.

Microscreen units have been used to polish secondary plant effluents. By using a fabric with 25-micron (μm) openings, the suspended solids in activated sludge and trickling filter plant effluents have been reduced from about 20 to 40 mg/l to about 5 to 10 mg/l. With activated sludge plant effluents, this reduction can represent a final effluent BOD of about 10 to 20 mg/l. The washwater will amount to about 5 percent of the flow being treated. The filtration rate will average about 4 to 8 gpm/ft^2 (230 to 460 m^3/m^2·d) of submerged screen area.

Microscreens usually are not very effective in removing alum flocculated solids in final effluents. The alum floc does not have much shear resistance and seems to "flow" through the fabric. However, if alum is fed to an aeration basin for phosphorus removal, the solids remaining in the effluent from a final clarifier can be removed to the same degree as normal activated sludge solids.

The reader is referred to the Technology Transfer Design Manuals for *Suspended Solids Removal* and *Upgrading Wastewater Treatment Plants* for additional information on microscreens (1) (2).

In choosing microscreening or rapid sand filters for SS removal from wastewater treatment plant effluents, several items must be considered. A granular media filter can produce a high quality effluent if such is required, because effluent SS below 5 mg/l can be obtained with proper design of granular media filters. Such an effluent quality would be difficult to obtain consistently with a microscreen. Some comparative studies between sand filters and microscreens were made by the Chicago Metro Sanitary District (16) and in England (17). Microscreens cannot cope with sudden load changes as well as sand filters. Sand filters require about 8 to 10 ft of head, which frequently means pumping and appreciably increased costs. Microscreens require only about 12 to 18 in. of total head loss. The space requirements for microscreens are less than those for granular media filters.

On the basis of total and operating cost comparisons made in England (17), microscreening was somewhat more expensive than sand filtration, even if pumping was required.

11.6 References

1. *Process Design Manual for Suspended Solids Removal.* U.S. EPA, Office of Technology Transfer (January 1975).

2. *Process Design Manual for Upgrading Existing Wastewater Treatment Plants.* U.S. EPA, Office of Technology Transfer (October 1974).

3. Haney, B.J., and Steimle, S.E., "Potable Water Supply By Means of Up-Flow Filtration." *Journal American Water Works Association,* p. 117 (February 1974).

4. Alpe, G., and Barrett, A.D., "Upflow Filtration." *Journal New England Water Pollution Control Association,* p. 111 (December 1973).

5. Hamann, C.L., and McKinney, F.E., "Upflow Filtration Process." *Journal American Water Works Association,* p. 1023 (September 1968).

6. "Design and Application of Multimedia Filters." *Journal American Water Works Association,* p. 97 (February 1969).

7. Morey, E.F., "High Rate Filtration–Media Concepts." *Public Works,* p. 80 (May 1974).

8. Jung, H., and Savage, E.S., "Deep-Bed Filtration." *Journal American Water Works Association,* p. 73 (February 1974).

9. Cleasby, J.L., and Baumann, E.R., "Direct Filtration of Secondary Effluents." Presented at EPA Technology Transfer Design Seminar (February 1974).

10. Cleasby, J.L., "Filter Rate Control Without Rate Controller." *Journal American Water Works Association,* p. 181 (April 1969).

11. Kreissal, J.F., *Granular Media Filtration of Wastewater: An Assessment.* U.S. EPA, NERC (January 1973).

12. *Ultra High Filtration of Activated Sludge Plant Effluent.* U.S. EPA, Office of Research, No. EPA-R2-73-222 (April 1973).

13. Medlar, S., "A New Approach to Activated Carbon Filtration." *Water and Sewage Works,* p. 56 (November 1973).

14. "Sewage Treatment Plant Design." ASCE *Manual of Engineering Practice* (1959).

15. Marshall, G.R., and Middlebrooks, E.J., *Intermittent Sand Filtration to Upgrade Existing Wastewater Treatment Facilities.* No. PRJEW115-2, Utah Water Research Lab, Utah State University, Logan, Utah (February 1974).

16. Lyman, B., et al., "Tertiary Treatment at Metro Chicago By Means of Rapid Sand Filters and Microstrainers." *Journal Water Pollution Control Federation,* p. 247 (February 1969).

17. Isaac, P.G., and Hibbard, R.L., "The Use of Microstrainers and Sand Filters for Tertiary Treatment." *Water Research,* No. 6, Great Britain, p. 465 (1972).

CHAPTER 12

PHYSICAL-CHEMICAL TREATMENT

In this chapter, physical-chemical (PC) treatment of wastewater is defined as treatment combining physical and chemical processes whose effectiveness primarily depends on physical and chemical reactions. Such processes include:

1. Coagulation-flocculation
2. Recarbonation
3. Gas stripping
4. Sedimentation
5. Filtration
6. Flotation
7. Adsorption
8. Oxidation-reduction
9. pH adjustment
10. Reverse osmosis
11. Ion exchange
12. Distillation

PC treatment of wastewater employs some combination of the above unit processes to remove pollutants and alter water quality. By using these processes, it is possible to obtain any desired effluent water quality.

However, wastewater treatment plant effluent standards usually only require reduction of biochemical oxygen demand (BOD) to between 5 and 30 mg/l, chemical oxygen demand (COD) to between 15 and 60 mg/1, and suspended solids (SS) to between 5 and 30 mg/1 for small municipalities. These levels of quality may be attained by PC treatment, with the following processes (1):

1. Coagulation-flocculation
2. Sedimentation
3. Filtration
4. Adsorption

PC methods may be necessary, when circumstances dictate the removal of substances not readily removed by biological treatment methods–substances, such as dissolved inorganic compounds, biologically refractory organic materials, or toxic substances, both organic and inorganic. The most common inorganic substance normally removed by PC treatment in municipal wastewater is phosphorus. If an industrial discharge is a component of the municipal wastewater, substances such as nitrogen, phenols, dyes, heavy metals, and related materials may be present in significant quantities, and PC treatment may be required. In general, PC processes are used in smaller wastewater treatment plants for:

1. Reduction of phosphorus
2. Reduction of nitrogen
3. Treatment of wastes toxic to biological systems
4. Removal of color
5. Removal of biologically refractive materials

PC methods have not been widely used to treat municipal wastewater, because of cost and lack of demonstrated experience with these methods. However, in recent years nutrient removal has become obligatory in some States. Reports now available in the technical literature (2) (3) (4) (5) permit a designer to evaluate the applicability of the available PC processes to the particular design problem. These processes may be used alone or in conjunction with biological processes to obtain optimum results. They should be considered if:

1. The wastewater contains large concentrations of nonsettleable SS (colloidal)
2. A high degree of treatment is required
3. A high degree of reliability is required
4. Fluctuations in quality and quantity of wastewater are beyond the tolerance of biological systems (fluctuations due to large summer population, small winter population, and startup and shutdown of a seasonal industry)
5. Plant size must be minimized

There are situations in which PC methods are generally not favorable. Wastewaters containing large concentrations of dissolved, biologically degradable organic materials, and those with BOD concentrations relatively high in comparison to COD, are usually treated more economically by biological methods. For example, a wastewater containing large concentrations of sugar, soluble starch, acetic acid, etc., would be difficult to treat by PC methods.

12.1 Design Considerations

Basic data and preparatory studies required in designing a PC treatment system include:

1. Sufficient chemical and biological analyses of the wastewater, to ascertain the fluctuations in concentration of various pollutants over a period of time
2. Hourly, daily, and annual variations in raw wastewater flow
3. Treatability studies, using PC unit processes considered for design

The chemical analyses are essential in selecting unit operations to be employed and chemical additives to be used and in estimating the probable operating cost of the proposed treatment works. The raw wastewater flow and flow variations obviously should be estimated, to establish the size of the various treatment units and the auxiliary equipment, such as chemical feeders. Flow equalization may be necessary to reduce the required capacity of the chemical feeders and treatment units, whose design is determined by hydraulic loadings. Information on equalization basic design is given in chapter 4.

Chemical treatability tests usually take the form of jar tests, in which various dosages of selected chemicals are added to jars of the wastewater on a multiple-position stirring machine. Instructions for making jar tests are given in the EPA *Process Design Manual for Suspended Solids Removal* (4). After suitable periods of mixing, flocculation, and sedimentation, the results of the chemical addition are observed and measured. These results will establish the suitability of the selected chemicals, the dosages required, the degree of treatment to be expected, and the flocculation characteristics of the waste, and will provide a means of estimating the weight of sludge generated by the proposed treatment. Consideration of sludge disposal is particularly important in the design of a PC treatment plant, because of possible unfamiliar characteristics of the sludge produced. Details on sludge handling and disposal are given in chapter 14.

12.2 Chemicals

12.2.1 Alum

Alum (aluminum sulfate) is widely employed in water treatment as a coagulant for color and turbidity removal. Alum has also been used, to a limited extent, for municipal wastewater coagulation. Interest in the use of alum treatment of wastewater has greatly increased, however, because it has become generally recognized that phosphorus can be precipitated with alum. The simplified chemical reaction used to represent the coagulation process is:

$$Al_2(SO_4)_3 \cdot 14\ H_2O + 6\ HCO_3^- \rightarrow \underline{2\ Al(OH)_3} + 6\ CO_2 \uparrow + 14\ H_2O + 3\ SO_4^=$$

$Al(OH)_3$ is a gelatinous, insoluble compound, which entraps and adsorbs suspended particulate and colloidal material in wastewater into a floc removable by sedimentation and filtration. HCO_3^- represents the alkalinity component of the wastewater. The chemical reaction involved in the removal of phosphorus (in the form of phosphate, $PO_4^{\equiv}$) is:

$$Al_2(SO_4)_3 \cdot 14\ H_2O + 2\ PO_4^{\equiv} \rightarrow \underline{2\ AlPO_4} + 3\ SO_4^= + 14\ H_2O$$

The above reaction indicates that, theoretically, removal of 1 lb (0.45 kg) of phosphorus requires 9.6 lb (4.4 kg) of alum. However, because of the competing reaction with the alkalinity and the necessity to reduce the pH to 5.5 to 6.5 (the minimum solubility range for $AlPO_4$), dosages of alum greater than the theoretical dosage are required. Therefore, the aluminum ion dosage is usually about 1.5 to 2.0 times the phosphorus ion removed, expressed in weight units. The proper dosage for the degree of removal desired can best be determined by jar tests.

Sodium aluminate ($NA_2O \cdot Al_2\ O_3 \cdot 3H_2O$) may be substituted for alum in certain situations (e.g., if chemicals are added to a biological process for improved phosphorus removal). In this case, the dose should provide an equivalent amount of aluminum, compared to the alum dose.

Alum may be purchased in lump, ground, rice, powdered, or liquid (49 percent solution) form. Choice of form depends on the amount used and the location of the wastewater treatment plant in relation to the source of alum. For details about the forms, sources, and design considerations of alum use, refer to the EPA *Process Design Manual for Suspended Solids Removal* (4).

12.2.2 Iron Salts

Iron salts react in much the same manner as alum and are capable of coagulating color, turbidity, suspended and colloidal solids, and their associated BOD and COD.

The chemical equation for precipitation of phosphorus and coagulation of wastewater with ferric ion is:

$$Fe^{+++} + PO_4^{\equiv} \rightarrow \underline{FePO_4}$$

In water, the ferric ion reacts with the hydroxide ion as follows:

$$Fe^{+++} + 3\ OH^- \rightarrow \underline{Fe(OH)_3}$$

From these reactions, it may be calculated that 1.8 lb (0.82 kg) of iron are theoretically required to remove 1 lb (0.45 kg) of phosphorus. However, as with other coagulants and coagulant aids, some amount reacts with the alkalinity and is not effective for phosphate removal. Therefore, the actual required weight ratio of ferric ion to phosphorus ion is usually about 2.5 to 3.0. The jar test is generally the best guide to required dosage.

Iron coagulants are available in the following forms:

Ferric chloride (anhydrous), $FeCl_3$	350-lb drums 135-lb drums
Ferric chloride (lump), $FeCl_3 \cdot 6\ H_2O$	
Ferric chloride (liquid), 37 to 47 percent $FeCl_3$	4,000-gal lots
Ferrous chloride (liquid), 20 to 25 percent $FeCl_2$	(waste pickle liquor)
Ferric sulfate, $Fe_2(SO_4)_3 \cdot 3\ H_2O$	50- to 100-lb bags (400-lb drums)
$Fe_2(SO_4)_3 \cdot 2\ H_2O$	50 to 100-lb bags (400-lb drums)
Ferrous sulfate, $FeSO_4 \cdot 7\ H_2O$	50-lb bags and bulk

Iron coagulants are more or less hygroscopic, depending on the form used. Some, such as ferric sulfate, can be dry fed, but it is not recommended for small plants that may be unattended for long periods. The preferred dosing method is solution feed, which is generally more reliable than using small dry feeders. Ferric solutions are very corrosive.

Details concerning the feeding of iron salts are in the EPA *Process Design Manual for Suspended Solids Removal* (4).

12.2.3 Lime

Calcium (Ca) ion in the presence of the hydroxide ion will react with phosphate to form the slightly soluble mineral, hydroxyapatite. The generalized equation for this process is:

$$3\ HPO_4^{=} + 5\ Ca^{++} + 4\ OH^{-} \rightarrow Ca_5(PO_4)_3(OH) + 3\ H_2O$$

Lime (calcium oxide [CaO], or quicklime) or calcium hydroxide [$Ca(OH)_2$, or hydrated lime] are the most common sources of calcium for wastewater treatment. Lime has the advantage of providing both the calcium ion and the hydroxide ion needed for the reaction. However, as with alum and the iron salts, acid neutralizing reactions and softening reactions divert some of the lime dosage from the phosphate reaction. Lime may also be used to provide additional alkalinity, if needed for the iron and alum coagulation processes.

If lime is used to remove phosphate in a PC treatment plant, a sufficient quantity must be added to raise the pH to 10 or higher. A pH of 11 or more may be required to reduce the phosphorus concentration to below 1 mg/l. Jar tests should be used to determine the lime dosage required for good clarification and the phosphate removal desired. Dosages will be higher in hard water areas where the softening reactions will have a high lime demand.

A soft water supply could also reduce the use of phosphate-containing detergents, reducing lime demand at the wastewater treatment plant. Following lime mixing and a short flocculation period, the precipitated hydroxyapatite and calcium carbonate are separated from the wastewater in a sedimentation basin.

Following sedimentation, advantage may be taken of the high pH of the wastewater to air strip the ammonia (6) (7). Whether or not the ammonia is removed, the sedimentation basin effluent will contain excess lime (which may cause difficulties in subsequent processes), and will have a pH value higher than acceptable for discharge. The excess lime is usually removed by adding carbon dioxide (or flue gas containing mostly CO_2) until the pH is reduced to about 9.0 to 9.5. At this pH, calcium carbonate is least soluble and may be removed by additional settling. Sometimes an iron salt is also required for good clarification at this point. If an extremely high quality effluent is required, the sedimentation basin effluent is filtered, using in-depth filters. Prior to filtration, the wastewater pH may require further adjustment to about 7.5 to 8.0, to prevent precipitation of calcium carbonate on the filter media. At these pH values, the calcium is associated with the bicarbonate ion and is fairly soluble.

Lime may be purchased as quicklime (CaO) or as hydrated lime [$Ca(OH)_2$]. The chemical difference between the two forms consists of one molecule of water combined with each molecule of lime in the hydrated form. However, this small chemical difference results in physical properties that make hydrated lime much easier to use in a small wastewater treatment plant. Quicklime is not suitable for a plant that would use less than about 1 ton per

day of this chemical, because of storage and handling problems. Further information is available in the EPA *Process Design Manual for Suspended Solids Removal* (4).

In some localities, hydrated lime can be purchased as a slurry containing 20 to 30 percent lime. These slurries are the byproduct of acetylene manufacture. If available within a reasonable distance, this form of lime may be the cheapest and easiest to handle. It requires a storage tank with a slow mixer to keep the slurry in suspension.

All forms of lime tend to cause excrustations on pipes and equipment, and thus piping and equipment should be designed for easy cleaning. Piping should permit the frequent use of a "polypig" (a plastic insert which is forced through the piping by hydraulic pressure). Preventive maintenance is essential for successful operation of a lime treatment system.

12.2.4 Coagulant and Filter Aids

One relatively recent advance for removing suspended contaminants in wastewater treatment has been the development of organic polymers, or polyelectrolytes, having properties that permit them to act as coagulants or coagulant aids. These synthetic or natural polymers, if introduced into wastewater in relatively low concentrations (from less than 1 mg/l to 10 mg/l), may bring about a coagulation of the suspended matter into settleable or filterable flocs. Synthetic polymers may be classified on the basis of the type of charge on the polymer chain. Polymers having negative charges are called anionic; those carrying positive charges are cationic. Certain compounds carry no charge and are called nonionic.

Many polymers are available for wastewater treatment. The EPA *Process Design Manual for Suspended Solids Removal* (4) lists several different polymer manufacturers.

Selecting the best polymer is based on experience and testing (jar tests are the test method of choice). Extensive testing should be done before selection. Dosage is just as important as polymer selection (an excessive dosage may yield poor results). Polymers may be used alone or in conjunction with other coagulants, to improve settleability and filterability of the wastewater. Information about these polymers, their availability as feeding requirements, etc., can be found in reference (4).

12.2.5 Ozone

Ozone is an oxygen molecule containing three atoms of oxygen. In wastewater treatment plants, ozone has been used principally for odor control in the exhaust air from wastewater wet wells, screen chambers, and similar locations. In Europe, and to a limited extent in the United States, ozone has been used as a disinfecting and color reducing agent for municipal drinking water. Because ozone is a powerful oxidizing agent, it has been suggested that ozone may be used as a tertiary treatment step to obtain low effluent COD values. An added benefit would be disinfection. Ozone is also excellent for removing phenols. Above a pH of 10, ammonia may be oxidized to nitrate-nitrogen. For color and COD reduction, ozone may in some cases replace activated carbon adsorption. Ozonation is discussed in chapter 15.

12.3 Unit Operations

12.3.1 Mixing and Flocculation

Excellent mixing and flocculation are essential to the economical operation of any chemical treatment system. Mixing disperses the added chemical throughout the wastewater being treated. The most efficient utilization of chemicals is achieved by an extremely rapid and uniform dispersal. Good mixing requires considerable energy input, and velocity gradients in excess of 300 fps (90 m/s) should be employed. Velocity gradients of this magnitude when adding coagulants, however, may cause excessive shearing of floc particles, if contained for over 2 minutes. It is, therefore, necessary to reduce the energy input and the velocity gradients as soon as the dispersal of the treating agent is complete. In the flocculation stage, the flocculating agents and the suspended matter in the wastewaters coalesce into relatively large floc particles, which have improved settling characteristics. Velocity gradients in the flocculating section should not exceed 100 fps (30 m/s). Flocculation may require from 5 to 30 minutes. The time required may be estimated from the results of the jar tests. Following flocculation, the wastewater is normally admitted to a sedimentation basin. Excessive turbulence should be avoided in the flow from the flocculation basin to the sedimentation basin, to keep floc breakup to a minimum. A more complete discussion of mixing and flocculation is found in *EPA Design Manual for Suspended Solids Removal* (4).

12.3.2 Sedimentation

Well-conditioned chemical floc will generally settle more slowly than primary wastewater sludges and more rapidly than activated sludges (4). Few generalizations can be made, however, concerning the actual rates of settling to be used for design purposes, because these rates depend on the particular coagulant used, the response to coagulation aids, and the chemistry of the wastewater being treated. Present recommendations (4) for peak overflow rates for sedimentation basins are 500 to 600 gpd/ft^2 (20 to 24 m^3/m^2·d) for alum systems, 700 to 800 gpd/ft^2 (29.33 m^3/m^2·d) for Fe systems, and 1,400 to 1,600 gpd/ft^2 (57 to 65 m^3/m^2·d) for lime systems. Further experience and actual pilot studies will offer more accurate design information.

Ample provision should be made in sedimentation basin design for the large quantities of sludge generally produced by chemical coagulation of wastewaters.

The critical design parameter is the peak hourly surface overflow rate. Gross carryover of solids can cause a downstream filter or adsorption process to fail because of excess head loss. Such a failure may in turn result in a total failure of the plant to achieve desired results.

12.3.3 Lime Treatment and Recarbonation

Lime treatment of wastewaters for phosphorus removal often requires raising the pH above 10.0 to 11.0. At these high pH values, precipitated calcium carbonate tends to encrust all downstream processing equipment. Provisions should be made for reducing the pH to about 9.5 before, and about 7.5 following, lime-promoted settling. The pH may be reduced by

introducing carbon dioxide gas into the wastewater, which will result in the formation of calcium carbonate. For a small wastewater treatment plant, the carbon dioxide may be obtained in tank truck lots from a commercial supplier. It is usually added to the water through a diffuser grid system in a recarbonation basin. Recarbonation basin detention time is usually between 10 to 15 minutes. The floc formed with or without additional chemical coagulant is then removed by sedimentation in a second basin. A more complete description of this process is contained in reference (5).

The high pH from lime treatment may also be reduced by the use of a mineral acid, such as sulfuric acid or hydrochloric acid. Using mineral acid to reduce the pH results in an increase in the total dissolved solids of the effluent. The method of pH reduction selected will depend on the effluent quality desired and the costs of the alternative methods.

12.3.4 Filtration

If the PC treatment system chosen includes filtration for improved SS removal, it is common to employ granular media designs. Use of these filters for polishing effluents from secondary biological treatment plants is discussed in chapter 11.

Properly designed dual- or multimedia filters have operated at rates of about 5 gpm/ft^2 (0.2 m^3/m^2·min). Filters should be provided with surface or air/water backwashing. Pressure filters are often desirable for small plants, because of the higher head losses (up to 20 ft [6 m] of head) that may be employed. If filtration is followed by a granular carbon adsorption step, the effluent from the pressure filter can pass through the downstream carbon columns without having to be repumped.

Filter backwash waters must be reprocessed through the wastewater treatment system. Direct return of the wash waters to the head of the plant would create a substantial hydraulic surge. Therefore, if no flow equalization facility is available for the incoming wastewater, the backwash water should be collected in a storage tank and recycled to the head of the plant at a controlled rate. An excellent treatment of the design considerations for filtration can be found in chapter 9 of the EPA *Process Design Manual for Suspended Solids Removal* (4).

The wastewater is passed through the granular carbon in a column. The flow may be either upflow or downflow. A complete description of the designs of granular carbon adsorption systems is included in the EPA Technology Transfer *Process Design Manual for Carbon Adsorption* (3).

The amount of carbon used depends on the amount of COD removed. Carbon adsorbs both biodegradable and other organics; therefore, amount of COD removal must be used in estimating carbon usage. It has been found that for domestic wastewaters, a pound of carbon may adsorb 0.5 lb or more of COD (8).

If the effluent organic concentration from a carbon column exceeds the desired level, the adsorptive capacity of the carbon is exhausted, for this particular system. The exhausted column must then be taken out of service and the used carbon replaced with fresh carbon. In a small plant, the exhausted carbon may be discarded. In larger plants, it may be economically desirable to regenerate the spent carbon. This is generally done by thermal methods. For smaller plants, the carbon must be sent to an offsite regeneration facility. In any event, a detailed cost analysis is necessary to determine the most economical methods of dealing with the carbon. Powdered activated carbon treatment is a possible alternative to adsorption.

12.3.5 Adsorption

Adsorption has been described as a process of interphase accumulation (2) of ions, atoms, molecules, or colloidal particles. Adsorption can occur at an interface between any two phases; for example, a liquid-liquid interface, a gas-liquid interface, or a liquid-solid interface. The material being concentrated is referred to as the "adsorbate," and the adsorbing phase is called the "adsorbent." Many physical and chemical forces (such as van der Walls forces, electrokinetic forces, thermal forces, etc.) cause this accumulation, which is similar to surface tension at the phase interface.

Interest in the current discussion centers on the adsorption of pollutants from a solution on a solid. For the majority of systems encountered in wastewater treatment, the principal driving forces are the lyophobic behavior of the solute relative to the solvent (water) and the high affinity of the solute for the solid. A more complete description of the adsorption process and the mathmatics of its application will be found in reference (2).

Adsorption may be used to meet extremely high final effluent standards for BOD and COD in a small biological treatment plant or as a substitute for biological treatment in a complete PC treatment plant. In this latter case, the carbon adsorption process is used to remove soluble organics remaining after coagulation and filtration of raw wastewater, to obtain BOD_5 of less than 20 mg/l. Currently, the most commonly used form of activated carbon is the granular form. Because powdered carbon currently costs about \$0.15 to \$0.20/lb, and granular carbon costs about \$0.45 to \$0.50/lb, powdered carbon used on a once-through basis may be justified for small plants not requiring a high degree of treatment.

Granular carbon columns are also used after chlorination to remove partially oxidized chlorinated organics and chloramines in conjunction with breakpoint chlorination for ammonia removal (9) (10).

12.3.6 Stripping

Stripping is a method of removing volatile substances from a solution, by exposing the solution to an atmosphere in which the concentration of the volatile component in the atmosphere is less than the equilibrium concentration in the liquid, in accordance with Henry's law. The volatile component then tends to leave the solution and enter the atmosphere, until equilibrium is established. Liquid gas surface films resist the escape of the volatile

component, as does the diffusion through the bulk liquid. Strippers are designed to maximize the rate of escape of the volatile component, by creating constantly renewed interfaces between the liquid and the atmosphere; reducing the distance of diffusion within the bulk liquid, providing greater turbulence; and providing an atmosphere with little or none of the volatile component.

In wastewater treatment practice, there are three types of strippers:

1. The bubble type diffuses air, in the form of small bubbles, into the wastewater. The small bubbles present an extremely large interface between air and water, while, at the same time, the interface is being renewed by the movement of the bubbles rising in the liquid. Volatile substances in the liquid cross the interface into the bubbles and are released to the atmosphere when the bubbles reach the surface.
2. The spray system sprays wastewater into the atmosphere in small droplets. Here again, a large liquid-air surface is created, permitting the escape of the volatile components. Spray systems can utilize either natural wind and draft to provide a change of air and remove the volatile substances or a mechanical draft, using a fan.
3. The thin film stripper causes wastewater to flow in a thin film over solid surfaces in the stripper. These surfaces are usually contained in a tower and may consist of packing material, wooden slats arranged in a stacked grid, or other designs. The wastewater enters the top of the tower and flows down over the surfaces in a thin film. Air is blown in the bottom of the tower and exits at the top or may be drawn upward through the tower by a negative pressure fan. Here again, the volatiles escape from the liquid surfaces. The released volatiles may be removed from the air before discharge to the general atmosphere by passing the off-gases through an appropriate absorber.

Details on the design of strippers can be found in reference (6).

12.3.7 Other Unit Operations

The other unit operations listed on the first page of this chapter are of minor interest to the designer of small municipal wastewater treatment plants and would only be employed in special situations. They are, therefore, beyond the scope of this manual. These methods are mentioned here to bring them to the reader's attention, so they will not be overlooked if their use is indicated.

In case a waste has a high fiber or oil content, dissolved-air flotation may yield results superior to sedimentation, at a savings of space and capital cost. Reverse osmosis, ion exchange, and distillation would only be considered in cases in which water reuse was contemplated, although selective ion exchange has been studied in connection with NH_3 removal (6). Oxidation-reduction processes may involve the use of chlorine, ozone, potassium permanganate, and hydrogen peroxide. These chemicals may be used for odor control and BOD reduction.

12.4 Costs

The total annual costs of a PC treatment facility for comparable BOD_5 removal may be similar to that of an activated sludge plant, depending on the circumstances of the application.

The operating cost of a PC plant will be higher than that of a biological plant, although the initial cost may be lower. A PC plant may be more cost effective than a biological plant. A biological system can remove ammonia NH_3 by conversion to nitrate, while normal PC treatment (chemical coagulation, clarification, carbon adsorption designs) does not. As noted earlier, PC plants normally remove phosphorus. Biological facilities normally do not, but can be modified to do so. Therefore, the required effluent criteria will greatly affect the choices of a treatment system and the relative economics of the alternative approaches.

12.5 References

1. *Physical-Chemical Treatment of Combined and Municipal Sewage.* U.S. EPA, EPA-R2-73-149 (1973).

2. *Oxidation and Adsorption in Water Treatment Theory and Application.* University of Michigan, Division of Sanitary and Water Resources Engineering (February 1965).

3. *Process Design Manual for Carbon Adsorption.* U.S. EPA, Office of Technology Transfer (October 1973).

4. *Process Design Manual for Suspended Solids Removal.* U.S. EPA, Office of Technology Transfer (January 1975).

5. Gulp, G.L., *Physical-Chemical Treatment Plant Design.* Presented at U.S. EPA Technology Transfer seminar, Pittsburgh (August 1972).

6. *Physical-Chemical Nitrogen Removal.* U.S. EPA Technology Transfer Seminar Publication (July 1974).

7. *Physical-Chemical Wastewater Treatment Plant Design.* U.S. EPA Technology Transfer Seminar Publication (January 1974).

8. Kreisel, J.F., and Westrick, J.J., "Municipal Waste Treatment by Physical Chemical Methods." *Applications of New Concepts of Physical-Chemical Treatment,* Pergamon Press (1972).

9. Barnes, R.A., Atkins, P.F., and Scherger, D.A., *Ammonia Removal in a Physical-Chemical Wastewater Treatment Process.* EPA report No. EPA-R2-72-123 (November 1972).

10. Bauer, R.C., and Snoeyink, V.L., "Reactions of Chloramines with Activated Carbon." *Journal Water Pollution Control Federation,* p. 2,290 (1973).

CHAPTER 13

NUTRIENT REMOVAL

13.1 General Considerations

If the wastewater from a municipality has been treated by the standard methods of primary-secondary treatment, the effluent will normally contain about 20 to 50 mg/l of BOD_5, 30 to 90 mg/l of COD, 20 to 40 mg/l of total nitrogen, and 8 to 15 mg/l of total phosphorus (1), as well as minor amounts of other constituents. These materials serve as nutrients for the natural biota in the receiving waters, sometimes stimulating excessive growth of particular species. This overgrowth frequently creates undesirable conditions such as oxygen depletion, fish kills, odors, unsightly concentrations of algae, discolored or turbid water, and unpleasant tastes. To prevent such biological stimulation, it may be desirable to limit one or more of the nutrients in a treatment plant effluent. Generally, one of a number of essential nutrients is in short supply and, therefore, growth-limiting in any particular natural environment. If the natural growth-limiting nutrient can be prevented from entering the receiving water in the treatment plant effluent, excessive biological response resulting from the discharge can be prevented. Prevention of excessive growth is the objective of nutrient removal.

Numerous studies have found that, in general, phosphorus is the growth-limiting nutrient in the natural freshwater environment (2). Nitrogen is generally limiting in the marine environment (2). Less frequently, it will be found that carbon or some other element is limiting. As a result of these studies, much attention has been given to methods for removing nitrogen and phosphorus from municipal wastewater.

13.2 Phosphorus Removal

As noted in chapter 12 of this manual, phosphorus may be removed in a physical-chemical (PC) treatment system by the addition of iron or aluminum salts, or lime, to raw wastewater prior to sedimentation and filtration. There are, however, many biological treatment plants that also require phosphate removal. Some phosphate will be removed by the biological treatment via the excess sludge. The amount of phosphorus in the excess sludge dry solids is variable, ranging upward from 1.0 percent (the average percentage found in human waste dry solids). Methods for maximizing the biological uptake of phosphorus are not well understood and, therefore, cannot be relied upon as a means of nutrient removal at this time. Hence, it is necessary to fall back on chemical treatment to achieve reliable phosphorus removal from wastewater.

Using chemicals to obtain good coagulation will usually result in a high degree of phosphate precipitation (see section 12.2). Such coagulation followed by sedimentation of raw domestic wastewater will remove 50 to 80 percent of the BOD_5, which will reduce the load on any subsequent biological treatment processes significantly. The aeration requirements and the excess sludge production will in turn be reduced.

Chemicals used for phosphate removal in a biological treatment plant may be added: 1) before primary sedimentation, 2) in the aeration basin of an activated sludge unit, 3) before secondary sedimentation, 4) after secondary sedimentation, or 5) after second-stage sedimentation and prior to filtration (if the plant is a two-stage biological plant). Chemical addition of lime should not be used if the sludge is to be biologically digested. In a two-stage biological system, coagulants should not be added in the second stage, because the increased sludge wasting would excessively deplete the nitrogen-oxidizing microorganisms and inactivate the system.

Aluminum and iron salts will not affect the aerobic organisms in the aeration basin, or the anaerobic organisms if the sludge is anaerobically digested. However, sometimes dewatering the sludge is difficult. If these chemicals depress the sludge pH below 6.5, lime or some other alkali should be used to adjust the pH to 7.9, before the sludge is sent to the digester.

Conservatively speaking, the amount of chemical sludge produced will be equal to about 4 mg/l for each milligram per liter of aluminum ion added and 2.5 mg/l for each milligram per liter of ferric ion added. The amount of chemical solids precipitated with lime treatment depends on the pH maintained and the alkalinity of the wastewater, but roughly about three times as much sludge by weight will be produced, compared to ordinary primary settling.

13.3 Nitrogen Removal

In the freshwater environment, because nitrogen is not limiting, ammonia or organic forms in the effluent may exceed the direct nutrient requirements of the receiving water systems. This excess nitrogen can serve as an energy source for nitrifying bacteria, which oxidize the nitrogen to nitrates. If nitrogen is thus utilized, oxygen is extracted from the dissolved oxygen resources of the receiving waters. About 4.6 parts of oxygen are utilized in converting each part of ammonia to nitrate. The nitrogen in municipal wastewater can, therefore, be equivalent to 80 to 150 mg/l of BOD, if not removed before discharge. Detailed discussion of nitrogen control is presented in the *Process Design Manual for Nitrogen Control* (3).

13.3.1 Nitrogen Transformations in Biological Systems

Almost all the nitrogen in raw wastewater is present either in organic compounds or as ammonia. The principal sources of ammonia are urea and feces, in which nearly 25 percent of the dry solids is nitrogen (4). Urea is broken down by the bacteria enzyme urease to ammonia and carbon dioxide, in sewers, in primary clarifiers, and in biological treatment. If the wastewater received at a treatment plant is relatively fresh, containing an appreciable concentration of undecomposed urea, some of the urea may remain in the effluent from a secondary treatment plant. There is no known PC system for removing urea or converting it to ammonia. Thus, if wastewaters contain significant quantities of urea, biological treatment would appear to be necessary to insure conversion of the urea-nitrogen to either ammonia-nitrogen or nitrate-nitrogen, which can then be removed by either PC or biological processes (5). A good current review of this subject is given in reference (6).

13.3.2 Physical-Chemical Nitrogen Removal Methods

A form of stripping adaptable to small plants resulted from studies made in Israel showing that the ammonia concentration in a secondary effluent, if treated with lime to raise its pH to 11, could be reduced 90 percent if passed through 10 ponds in series, each with a residence time of 1.5 days (7). The liquid temperature was 59° F to 68° F (15° to 20° C). Removal was accomplished by surface desorption into the atmosphere.

Ammonia can be oxidized to nitrogen gas by adding a sufficient amount of chlorine to the wastewater to render the weight ratio of chlorine to ammonia about 9:1. This reaction must be carried out at a pH between 6.5 and 8.0 to avoid formation of chloramines (especially the trichloramine) (8) and of nitrates. The wastewater should receive a high degree of treatment for removal of organics, to prevent the formation of complex organochlorides and to keep the chlorine requirements to the theoretical amount needed for ammonia oxidation. The chlorides will be increased in the effluent stream by the amount of chlorine used. Also, because the pH is depressed, the addition of an alkali, such as lime or caustic soda, may be necessary.

It is possible to obtain greater than 95 percent removal of ammonia with this process. Economics and limits on chloride concentration in the effluent may dictate its applicability, however. It is desirable to follow the chlorine contact basin with an activated carbon column. Carbon catalyzes the ammonia-chlorine reaction and minimizes the discharge of chloramines in the effluent (9) (10).

Ammonia can be removed biologically by conversion to nitrates (the process of nitrification is described in chapters 7, 8, and 9). Such nitrification can be obtained in lightly loaded activated sludge systems, in a two-stage trickling filter, or in a lightly loaded bio-disk unit.

Denitrification is accomplished biologically in either a suspended growth or fixed growth unit. By maintaining anaerobic conditions, the facultative organisms present will break down nitrates as a source of oxygen and release nitrogen gas. A nitrifying-activated sludge process can be followed by a reactor containing a suspension of organisms, which are kept out of contact with free oxygen and slowly agitated to release the nitrogen gas bubbles to allow the solids to settle properly in a gravity clarifier (11). The reactor should have a hydraulic detention time of about 2 hours. To obtain proper settling, about 30 minutes are necessary to insure that bubbles of nitrogen gas are detached from the floc. Aeration assists in this separation.

Denitrification has been studied using either packed towers or rapid sand filters (12) (13). Several plants using such systems are under design. A plant using large medium packed towers and also fine medium columns is being operated under an EPA demonstration grant to study both systems for denitrification. Initial results indicate that both systems can reduce nitrate-nitrogen (14). The packing in the large medium towers consists of 10 ft (3 m) of 5/8-in. (15.9 mm) plastic rings; the fine medium columns have 6.5 ft (1.95 m) of 0.12 to 0.16 in. (3 to 4 mm) sand.

Because the denitrification organisms require a source of organic carbon, it is usually necessary to feed some methanol (or other organic carbon source) to the denitrification process in proportion to the incoming nitrate concentration, if the wastewater streams have a low BOD. About 3 lb of methanol are required for each pound of nitrate-nitrogen removed, if there is no other source of readily available carbon in the nitrified wastewater.

Biological systems can reduce ammonia-nitrogen to below 1 mg/1, if they are designed for the existing liquid temperature conditions. A biological system can also reduce total nitrogen to less than 3 mg/1.

13.4 Removal of Soluble Organics

Inasmuch as green plants have the ability to convert carbon dioxide or bicarbonates and water to complex organic substances by photosynthesis, it is seldom practical to attempt to limit algal growth by controlling the availability of carbon. However, to control the growth of heterotrophic microorganisms, the removal of organic matter as a nutrient is occasionally desirable.

In chapters 7, 9, and 10, consideration was given to the biological methods used in removing soluble organic matter from wastewater. In chapter 12, PC methods were discussed. However. it is often necessary to remove or reduce to trace amounts the dissolved organics remaining after conventional treatment methods have been applied. Under these circumstances, the final stage of treatment might employ activated carbon adsorption or ozonation. These processes are suitable for small treatment systems (see chapter 12). If ozone is used, the effluent should be checked for the presence of undesirable oxidation products of certain organic materials such as phenols, detergents, and organic acids (15).

13.5 Removal of Soluble Inorganics

Occasionally, a designer finds it desirable to remove soluble inorganic compounds, which may occur in excessive concentrations. If land disposal of treated wastewater becomes a widely accepted practice, it may be necessary to limit the amounts of certain of these materials in the effluent.

A study of the chemistry of the metals reveals that, in general, most metals can be oxidized or reduced to a form in which they may be precipitated as the hydroxide of the metal (e.g., mercury is precipitated as the sulfide). Most of the metals may be removed from wastewater by reverse osmosis or ion-exchange techniques. These methods create concentrated solutions of the metals or regenerate chemicals, which require further treatment prior to disposal. A more difficult problem is the reduction of the resulting sulfate and chloride concentrations. Ion exchange and reverse osmosis are again the two most likely processes, but economics would probably limit their application to only the most critical needs.

Excessive chlorides and sulfates in municipal waste usually occur as a result of ground-water infiltration, use of salt water for flushing, or a substantial industrial waste discharge. At the present time, there are only two methods available to a small wastewater treatment plant for

reducing the chlorides and sulfates in its effluent: reverse osmosis and distillation; reverse osmosis is the preferred method. Deionization, using ion exchange resins, is employed by industry, but is considered impractical for municipal use because of the cost and disposal problems involved with spent regenerants.

13.6 References

1. *Process Design Manual for Upgrading Existing Wastewater Treatment Plants.* U.S. EPA, Office of Technology Transfer (October 1974).

2. *Eutrophication, Causes, Consequences, Correctives.* National Academy of Sciences, Washington, D.C. (1969).

3. *Process Design Manual for Nitrogen Control.* U.S. EPA, Office of Technology Transfer (October 1975).

4. Camp, T.R., *Water and Its Impurities.* New York: Reinhold Publishing (1963).

5. Bayley, R.W., Thomas, E.V., and Cooper, P.F., "Some Problems Associated With the Treatment of Sewage by Non-Biological Processes." Proceedings of the Conference on Applications of New Concepts of PC Wastewater Treatment, Pergamon Press (1972).

6. Adams, C.E., "Removing Nitrogen From Wastewater." *Environmental Sciences and Technology*, p. 696 (August 7, 1973).

7. Folkman, Y., and Wachs, A.M., "Nitrogen Removal Through Ammonia Release From Holding Ponds," Proceedings of the Sixth Annual Conference on Water Pollution Research, Jerusalem, Pergamon Press (June 1972).

8. Pressley, T.A., Bishop, D.F., Pinto, A.P., and Cassell, A.F., *Ammonia-Nitrogen Removal By Breakpoint Chlorination.* EPA Report No. EPA-670/2-73-058.

9. Bauer, R.C., and Snoeyink, V.L., "Reactions of Chloramines with Active Carbon," *Journal Water Pollution Control Federation,* 45, p. 2,290 (1973).

10. *Ammonia Removal in a Physical-Chemical Wastewater Treatment Process.* EPA Report No. EPA-R2-72-123 (November 1972).

11. *Nitrification and Denitrification Facilities.* EPA Technology Transfer Seminar Publication (August 1973).

12. *Control of Nitrogen in Wastewater Effluents.* Presented at EPA Technology Transfer Design Seminar (March 1974).

13. Jeris, J.S., and Flood, F.J., "Plant Gets New Process." *Water and Wastes Engineering*, p. 45 (March 11, 1974).

14. *Description of the El Lago, Texas, Advanced Wastewater Treatment Plant.* Report of Harris County Water Control and Improvement District, Seabrook, Texas (March 1974).

15. Manley, T.C., and Niegowski, S.J., *Ozone.* Encyclopedia of Chemical Technology, vol. 14, New York: John Wiley & Sons (1967).

CHAPTER 14

SLUDGE AND PROCESS SIDESTREAM HANDLING

14.1 Background

14.1.1 Introduction

The U.S. EPA recently published Process Design Manuals on sludge treatment and disposal (1) and upgrading wastewater treatment plants (2); a technical report on municipal wastewater treatment-plant sludge and liquid sidestreams (3) is at press. Three U.S. EPA publications on sludge processing and several WPCF *Manuals of Practice* are directed to the design of all sizes of treatment facilities. This chapter presents those sludge processing design factors which are applicable to small domestic wastewater treatment works or are not covered in detail in references (1), (2), (3), and (4). Recently published books on sludge include *Treatment and Disposal of Wastewater Sludges* (5).

General requirements for installation, replacement, repair, operation, and maintenance of piping, fittings, equipment, and facilities for sludge handling are described in Section 2.14.

For small plants, which normally will use biological processes proceeding well into the endogenous respiration stage, the volume of sludge produced will usually range from 0.3 to 0.7 percent of the volume of wastewater treated. Using extended aeration, instead of high rate activated sludge, will reduce the dry solids to be processed in sludge handling facilities by about 40 to 60 percent.

There are several processes for sludge treatment and disposal utilized at wastewater treatment works larger than 1 mgd in size. These processes are usually not economical, or their operation is not simple enough, for smaller works. They include filter presses, incineration, heat conditioning and wet-air oxidation. Only when a plant approaches 1 mgd in size, or when special conditions exist, are the anaerobic digestion, vacuum or belt filtration, and centrifugation processes feasible.

Sludge treatment is usually minimized, if sufficient land is available, by using ponds in which the sludge is treated and only removed every 3 to 10 years. The treatment problem is also minimized if extended aeration or oxidation ditches are used, because the sludge solids undergo endogenous respiration, reducing the weight of dry volatile solids to be treated.

Whenever sludge is handled, extra care must be taken to prevent nuisance level emissions of odors. The allowable level, of course, is generally higher in rural areas than in urban areas. The nuisance level odor that will cause the operator to avoid the sludge processing area is relatively low for most operators. Therefore, to insure careful, regular inspection or monitoring and maintenance of the sludge processing facilities, it is very important that odor prevention and control be strongly considered in their design. Some types of sludge processing, such as aerobic digestion (or lime treatment) and wet sludge land disposal, and

sand bed dewatering and dry sludge landfill, are less prone to odorous conditions than other alternatives at smaller plants. Prevention and control of odors are discussed in Section 2.6 and in reference (6).

14.1.2 Descriptions of Terms

Although many of the terms in this chapter are commonly used by experienced engineers, in some publications the descriptions of certain processes are not consistent with general usage. A few important descriptions of terms from reference (3) are presented below. A more complete compilation of definitions can be found in the joint APHA, ASCE, AWWA, and WPCF *Glossary – Water and Wastewater Control Engineering* (7).

Centrate

Centrate is the liquid extracted from a sludge in a centrifuge, used either for thickening or dewatering. Its composition depends on the physical and/or chemical treatment of the sludge, the centrifugal force used in the unit, and the design of the centrifuge.

Conditioning

To release liquid from sludges that are flocculent or of the hydroxide type, it is usually necessary to treat them with various chemicals, to subject them to some drastic physical conditions (such as heat or cold), or to process them biologically. These processes are referred to as "conditioning," and may be necessary to accomplish the desired thickening or dewatering.

Decantate

Various sludges are thickened in gravity-type thickeners before processing. The overflow from such units is sometimes referred to as "decant liquid" or "decantate".

Dewatering

Dewatering is the removal of a sufficient amount of additional liquid, so that the thickened sludge attains properties of a solid; i.e., it can be shoveled, conveyed on a sloping belt, and handled by typical solids handling methods. Although there are some methods for final disposal of thickened sludges, many final disposal methods require that the thickened sludge be further dewatered. Dewatered sludge is usally in the form of a "cake," such as that produced by a centrifuge, sand drying bed, or vacuum filter.

Filter Backwash

Filter backwash is the water resulting from backwashing and removing solids retained by a granular media filter. Various types of granular media filters are used to remove physically most of the suspended solds (SS) from settled effluents. These filters are periodically backwashed to remove the accumulated solids. Therefore, the backwash water contains SS at concentrations that may vary from a few hundred to several thousand milligrams per liter (mg/1).

Filtrates

If sludges are dewatered on vacuum filters, filter presses, or other devices in which the liquid is separated from the solids by a differential force across a porous fabric or screen, the

extracted liquid is referred to as "filtrate." Its characteristics depend on the sludge conditioning methods used, the chemicals applied, the character of the filtering media, and the type of sludge being processed.

Final Disposal

Sludge, either thickened, dewatered, biologically or chemically altered, or reduced to ash by incineration, must be returned to the environment. This final disposal must have minimal detrimental effect, if any, on the environment. Final disposal will usually utilize the land or, in some cases, the air or the ocean. Also, in some instances, the end product, resulting from any of several treatment steps (described later in this report), can be reused by recycling back to some other treatment process, where it will produce no adverse effects and can possibly have some economic value.

Liquid Skimmings

Much of the material skimmed from primary clarifiers and final clarifiers is liquid, such as oil or water, with floating grease and other debris. It must be disposed of properly and with a minimal amount of nuisance and odors. Typically, it is handled with the waste sludge from the primary clarifier.

Process Sidestream or Recycle

Processes used to prepare sludge for final disposal generally result in the formation of a liquid requiring further treatment. Such liquids include supernatant, decantate, centrate, and filtrate. The solids in these sidestreams sometimes can be recycled directly back to the main process line of flow. Often, however, these liquids are very concentrated and will upset normal processes if they are not first given special treatment before being recycled. Some wastewater treatment processes also produce polluted sidestreams, such as filter backwash and screen wash water, which may be recycled without further processing.

Sand Bed Drainage

Sand bed drainage is the liquid that drains out of sludge applied to sand beds for dewatering. These beds usually have underdrain systems that carry the liquid to a point where it can be properly handled for disposal. This liquid may have a high concentration of soluble organic matter, nitrogen, phosphorus, and heavy metals.

Screen Wash Water

A variety of screens can be used to remove either small or large SS. Most of these screens are cleaned by physical or hydraulic means. The wash waters from hydraulic cleaning may contain fairly high concentrations of SS. These wash waters are usually returned to the main treatment plant flow, upstream of the screen.

Septage

Sludge from household septic tanks, which has been partially stabilized anaerobically, is commonly called "septage." Septage is usually delivered to wastewater treatment plants in 1,000-gallon loads in frequencies that may vary seasonally. Normally, septage is added to the raw wastewater in batches, or in a continuous manner if a holding tank is available. At a few locations, septage has been added directly to the sludge processing stream, ahead of the conditioning step.

Sludge Treatment
Sludge treatment prepares the sludge for final disposal, or return to the environment, with minimal detrimental effect.

Supernatant
Supernatant is the liquid decanted from an anaerobic or aerobic digester. In domestic wastewater treatment works, this liquid may have a high concentration of suspended and dissolved organic matter; inorganics such as ammonium compounds, phosphates, and heavy metals; and various pathogens.

Thickening
Many sludges produced by treatment processes are extremely diluted. The process of thickening is employed as a final step in the sludge processing sequence, to reduce the volume of sludge and the size and cost of the subsequent sludge processing equipment.

14.1.3 Quantities and Characteristics

Two principal characteristics that must be known about any raw sludge are the sludge volume and the solids concentration. With this information and knowledge of the physical and chemical characteristics of the solids, a decision can be made as to what type of treatment processing is required before disposal. Average quantities of sludges produced by various treatment methods are listed in Table 14-1. Characteristics of various sidestreams resulting from the treatment of sludge are listed in Table 14-2 (3).

The values given in Table 14-1 are for a domestic wastewater having an average BOD_5 and SS of about 200 mg/l and 250 mg/l, respectively. The volume of sludge from any treatment process is, of course, related to the solids concentration. The volume of the wet solids can be significantly reduced by various sludge treatment methods, including thickening and dewatering.

14.2 Thickening

Sludge solids are either originally suspended in wastewater or are generated by chemical precipitation or by growth of biological organisms. Removal of such solids, at least in regard to domestic wastewaters, is normally accomplished in relatively quiescent basins, which allow the solids to settle out by gravity. Simultaneously with clarification, some thickening of settled sludge frequently takes place.

Before further processing, frequently more thickening is required than can be attained by gravity settling (8). This is especially true of the hydroxide-type sludges, generated by some chemical coagulants, and of waste activated sludge. The settled solids thicken with time and/or by the aid of some slow-stirring mechanical devices, such as pickets or scraper arms. The latter devices mechanically break up the agglomerated solid particles and release the liquid entrained or enmeshed in them. This process is referred to as gravity thickening.

TABLE 14-1

AVERAGE QUANTITIES OF SLUDGE

TREATMENT PROCESS	SLUDGE VOLUME Gal/Million Gal of Wastewater	DRY SOLIDS IN SLUDGE Lb/Million Gal of Wastewater	Percent
Primary Sedimentation			
Raw	2,000-3,000	1,000	4-6
Separate Anaerobic Digestion	1,000-1,500	750	6
Digested and Dewatered (Sand Beds)	300-450	750	40
Digested and Dewatered (Vacuum Filters)	225-350	750	27.5
Trickling Filter[1]			
Low Loading	1,000-3,000	450	4-6
High Loading	2,000-3,000	750	2-5
Activated Sludge			
High Rate	14,000-19,000	900-1,900	0.8-1.2
Normal Loading	8,500-13,000	700-1,600	1.0-1.5
Extended Aeration	3,300-7,000	400-1,200	1.5-2.0
Extended Aeration (Vacuum Filters)	300-700	2,250	20
Primary Sedimentation and Activated Sludge Mixed			
Raw	7,000	2,300	1.5-3.0
Raw (Vacuum Filter)	1,400	2,300	20
Separate Anaerobic Digestion	2,700	1,400	6
Digested (Sand Beds)	1,350	1,400	40
Digested (Vacuum Filters)	900	1,400	20

TABLE 14-1 (continued)

AVERAGE QUANTITIES OF SLUDGE

TREATMENT PROCESS	SLUDGE VOLUME Gal/Million Gal of Wastewater	DRY SOLIDS IN SLUDGE Lb/Million Gal of Wastewater	DRY SOLIDS IN SLUDGE Percent
Chemical Precipitation of Phosphorus[2]			
With Lime	6,000-14,000	3,000-10,000	6-10
With Alum	10,000-30,000	600-2,500	0.5-1.5
With Iron Salt	10,000-25,000	800-3,000	1.0-2.5

[1] Lower figures apply if primary settling is provided, and the higher figures are for plants not using primary settling.

[2] Assuming soluble phosphorus present, as P, is 10 mg/l and is reduced to 1 mg/l; alkalinity is 250 mg/l.

NOTE: 1 lb/10^6 gal = 0.12 mg/l
1 gal/10^6 gal = 1 ml/m^3

TABLE 14-2

CHARACTERISTICS OF VARIOUS SIDESTREAMS
PRIMARY AND ACTIVATED SLUDGE TREATMENT PLANTS (3)

Type of Sidestream	BOD_5 mg/1	COD mg/1	SS mg/1	NH_3 mg/1	P (Soluble) mg/1	Average Vol. % Treated Wastewater	Remarks
Aerobic Digester Supernatant	1,000–8,000	3,000–15,000	3,000–10,000	400–1,000	300–700	0.50–1.0	Odorous. SS not too settleable.
Aerobic Digester Supernatant	50–500	200–2,000	200–3,000	Very low	25–200	0.50–1.0	High in nitrates.
Sludge Thickener Overflow (Gravity)	50–1,000	100–2,000	100–1,000	25–100	20–50	2–3	May be septic. Solids not settleable.
Sludge Thickener Subnatant (Flotation)	25–500	50–200	25–500	Low	Low	2–3	Only waste activated sludge handled. Polymer used.
Raw Sludge Centrate or Filtrate (Chemical Conditioning)[1]	500–1,000	1,000–2,000	500–1,000	25–100	20–50	0.50–0.75	Includes primary and waste activated.
Centrate or Filtrate (Lime + Fe Conditioning)[1]	500–5,000	1,000–10,000	500–5,000	400–1,000	Low	0.50–0.75	Anaerobic digested sludge.
Centrate or Filtrate (Lime + Fe Conditioning)[1]	50–200	100–1,000	100–1,000			0.50–0.75	Aerobic digested sludge.

TABLE 14-2 (continued)

CHARACTERISTICS OF VARIOUS SIDESTREAMS
PRIMARY AND ACTIVATED SLUDGE TREATMENT PLANTS (3)

Type of Sidestream	BOD_5 mg/1	COD mg/1	SS mg/1	NH_3 mg/1	P (Soluble) mg/1	Average Vol. % Treated Wastewater	Remarks
Centrate or Filtrate (Polymer Conditioning)[1]	500–5,000	1,000–10,000	500–5,000	400–1,000	300–700	0.50–0.75	Anaerobic digested sludge
Centrate or Filtrate (Polymer Conditioning)[1]	50–200	100–1,000	100–1,000		25–200	0.50–0.75	Aerobic digested sludge.
Centrate or Filtrate (Heat Conditioning, Including Decant Liquor)[1]	3,000–10,000	10,000–25,000	1,000–3,000	500–700	150–200	1.0–1.5	Undigested primary and waste activated sludge.
Elutriate (After Anaerobic Digestion)	500–3,000	1,000–7,000	1,000–7,000	250–400	150–300	1.5–2.5	SS are colloidal. Not settleable.
Filter Backwash	500–1,000	1,000–3,000	300–1,500	25–35	10–15	2.0–5.0	Secondary effluent polishing.

[1]Type of sludge handled indicated under Remarks.

The technical and economic significance of sludge thickening is not always apparent or appreciated. However, the volume depends on the concentration of solids in the liquid. For example, a sludge with 98 percent moisture has twice the volume of the same sludge thickened to 96 percent moisture and, thus, would require twice the capacity in the next treatment processing unit unless some of the liquid is removed.

14.2.1 Gravity Thickening

Gravity thickening (although the most commonly used method at small plants and the least expensive thickening method) is often troubled with odor problems, particularly at temperatures above 77° F (25° C) or overflow rates less than 40 $lb/ft^2/day$ (195 $kg/m^2 \cdot d$), unless odor prevention and control are designed into the facility. Gravity thickening is sometimes inefficient for increasing the solids concentration of excess activated sludge (1).

The design basis for sludge thickeners is usually the solids loading, expressed in pounds of solids per square foot per day. The loadings shown in Table 14-3 can be used for sizing gravity thickeners at small plants (2) (3) (9).

TABLE 14-3

GRAVITY THICKENER LOADINGS

Type of Sludge	Influent Sludge percent solids	Thickened Sludge percent solids	Loading $lb/ft^2/day$[1]
Primary	4-6	7-10	20-30
Trickling Filter	2-4	5-7	10-12
Waste Activated	0.8-2.0	2-3.5	4-6
Primary Plus Activated	1.5-3	4-6	10-12
Primary With Alum	0.5-1.0	1.5-2.0	5-9
Primary With Iron	2-4	6-8	12-18
Primary With Lime	6-10	10-18	20-40

[1] $lb/ft^2/day = 4.9\ kg/m^2 \cdot d$

Gravity thickening can be separated into four activities, which take place in, roughly, four zones. These activities are clarification, hindered but constant settling rate, transition with

decreasing settling rate, and compression. They are described in Section 6.4.1 and references (2) and (10) and are shown on Figure 6-3.

Although the thickener is sized for the average design loading, it must be capable of adequately thickening the peak loading, taking into consideration the sludge storage capabilities in other parts of the solids handling system. Normally, sufficient total storage should be provided for the maximum, 3-day plant solids loading (2).

The details of designing gravity thickeners are contained in references (1), (2), (3), (4), and (10).

Thickening of flocculated sludges, such as activated and chemical sludges, is aided considerably by the installation of pickets on the scraper arms, as shown in Figure 14-1. These pickets may consist of angle-shaped, structural steel vertical arms, installed so that the apex of the angle is in the direction of motion. Generally, gravity thickening of all types of sludges is aided by use of such pickets, because they prevent bridging of floc particles. Also, if gas formation begins because of septic conditions, they aid in releasing gas bubbles from the sludge layer.

14.2.2 Flotation

The flotation method (see Figure 14-2) used for thickening sludge is known as dissolved-air flotation. In dissolved-air flotation, the influent wastes are mixed with a portion of recycled final effluent, which has been pressurized to 40 to 60 psi (276 to 414 kPa). The pressure is released at the mixing point, immediately followed by the discharge of combined sludge and pressurized effluent into the thickener. The air comes out of solution in the form of bubbles. These bubbles attach themselves to the SS of the influent sludge and float them to the surface, where they are removed in the form of thick scum (11). This method of thickening is rarely used at small plants, because continuous operator attention is generally required.

Detailed information on air flotation can be found in references (1), (2), (3), (4), and (10).

14.2.3 Centrifugation

Two types of centrifuges are used for sludge thickening. The disk nozzle centrifuge is used for waste activated sludge, if no primary solids are mixed in (i.e., if the activated sludge process is preceded by primary clarification), producing a thickened sludge composed of about 4 to 7 percent solids. The basket type is used for thickening both waste activated sludge and mixtures of activated and primary sludge, producing a thickened sludge composed of about 9 to 10 percent solids. The basket-type centrifuge is primarily a batch unit, compared with the disk-nozzle type, which runs on a continuous flow basis. However, the basket-centrifuge can be highly automated, so that manual attention is not required between batches. More information on centrifugation is presented in references (1), (2), (3), (4), and (10).

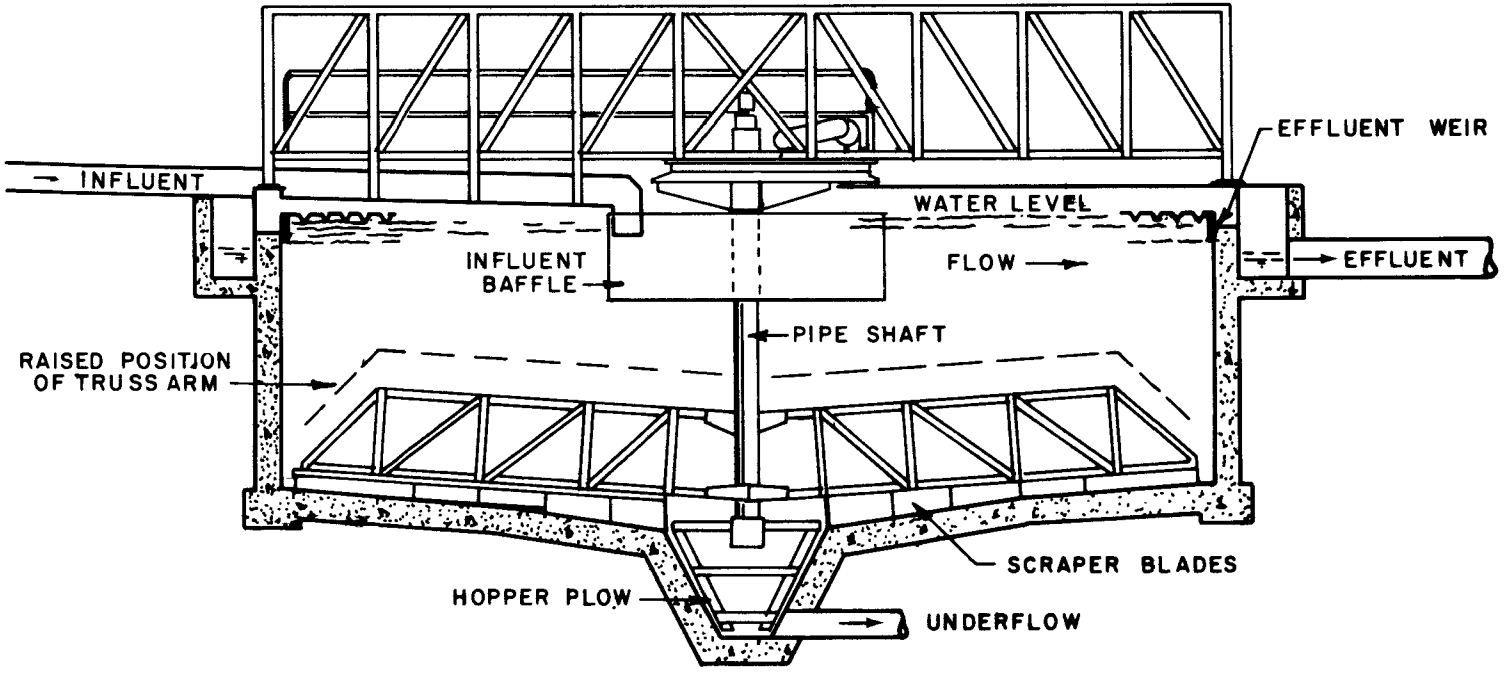

ELEVATION

FIGURE 14-1

GRAVITY THICKENER (8)

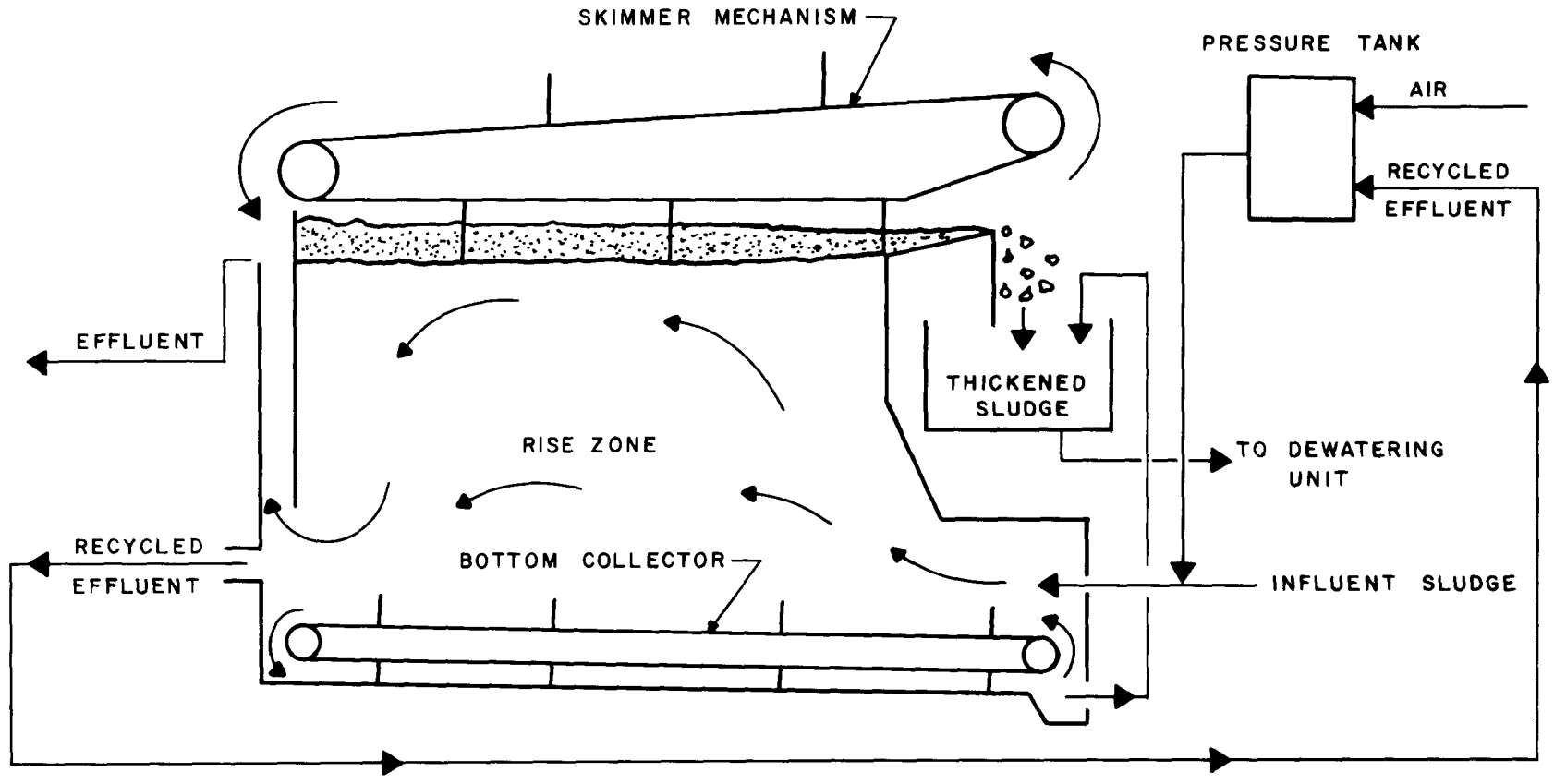

FIGURE 14-2

SCHEMATIC OF AN AIR FLOTATION THICKENER

14.3 Stabilization

Stabilization is designed to make the organic or volatile portion of sludge less putrescible and the treated sludge less odorous for final disposal. The stabilization processes best suited for use at small plants are aerobic digestion, lime treatment, and anaerobic digestion. These three processes are described briefly below and in much more detail in references (1), (2), (3), (4), (10), (12), and (13).

14.3.1 Aerobic Digestion

Aerobic digestion is frequently used at small treatment plants, particularly package-type activated sludge plants. The process consists of aerating sludge in uncovered and unheated tanks having a depth of 10 to 20 ft (3 to 6 m). The principal operating cost is in the power required to supply the necessary oxygen and to keep the basin contents properly mixed. If the dissolved oxygen content is maintained above 1 mg/l, the process produces no significant odors, and there are no hazardous gases generated. A schematic diagram of the aerobic digestion process is shown in Figure 14-3, and in Figure 14-4, a typical digester.

The advantages and disadvantages of using aerobic digestion in lieu of other stabilization processes (1) are:

Advantages:

1. Relatively simple to operate.
2. Requires a small capital expenditure compared with anaerobic digestion.
3. Does not generate significant odors.
4. Reduces the number of pathogenic organisms to a low level.
5. Reduces the quantity of grease or hexane solubles.
6. Produces a supernatant that, if clarified, is low in BOD, solids, and total phosphorus (P).
7. Reduces the sludge respiration rate.

Disadvantages:

1. Relatively high operating cost.
2. Relatively large energy user.
3. Uncertain design criteria.

If excess activated sludge is maintained at 68° F (20° C) or above, at a detention time of 10 to 12 days and with a DO concentration of 1 to 2 mg/l, the reduction of volatile solids will be about 30 to 50 percent. (Add about 5 days detention time if the sludge is primary or mixed activated and primary.) The amount of volatile solids reduced is not as large as with anaerobic digestion; however, the sludge is sufficiently stable for relatively odorless dewatering on sand beds and for disposal on land or in a landfill. If the sludge temperature drops to 50° F (10° C), the retention time should be increased to 20 days. If it goes down to 41° F (5° C), the time should be 30 days, if at least 30 percent reduction of the volatile solids is sought.

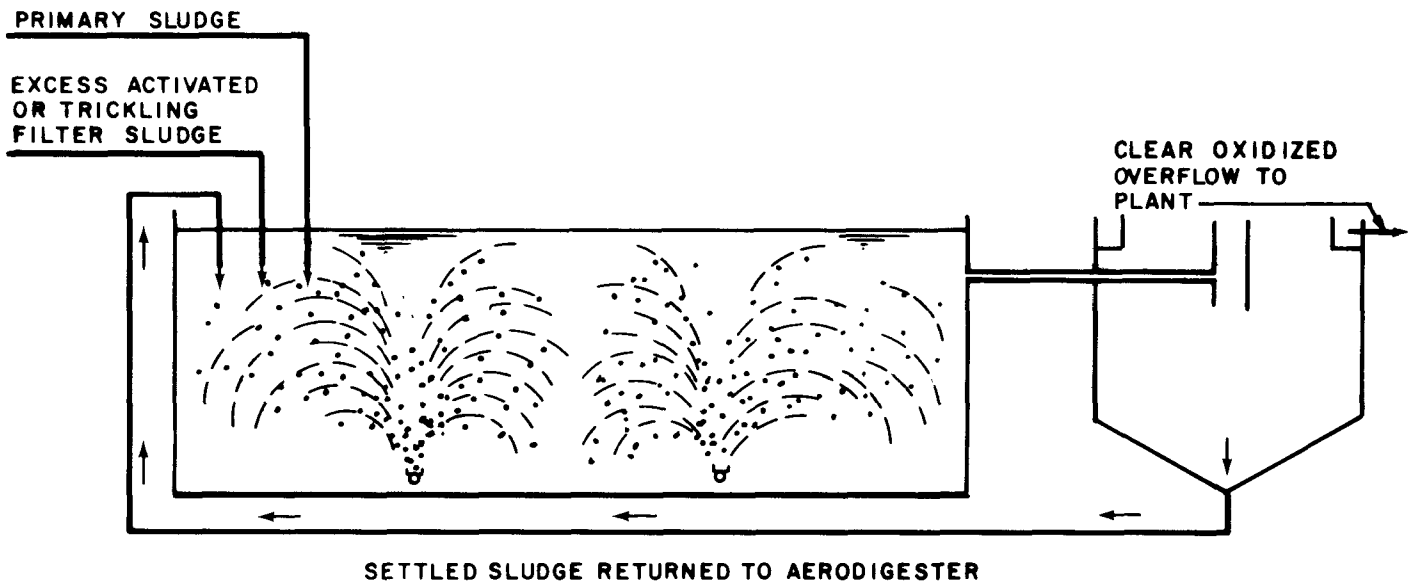

FIGURE 14-3

SCHEMATIC OF AEROBIC DIGESTER SYSTEM (1)

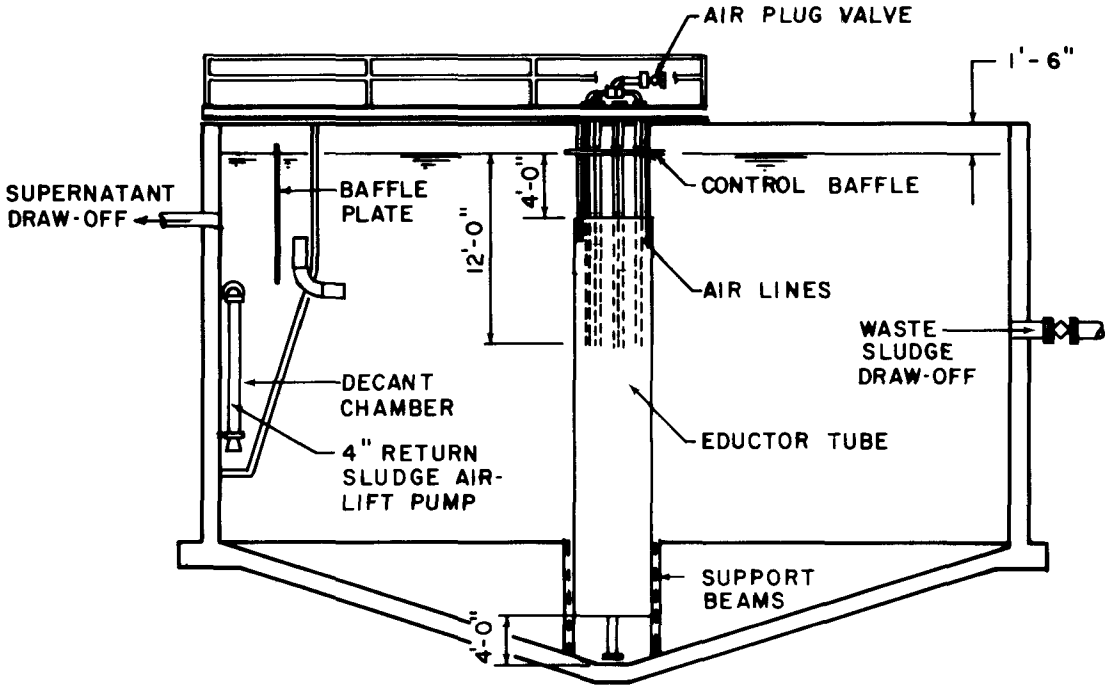

FIGURE 14-4

TYPICAL CIRCULAR AEROBIC DIGESTER (1)

Sludge sent to an aerobic digester with concentrations higher than 3 percent is difficult to mix and to obtain proper oxygenation in all portions of the basin, especially with compressed air and diffusers. Surface-type mechanical aerators can be used if the basin depth is about 10 to 12 ft (3 to 3.6 m); a draft tube can be used for deeper basins. At least 4 ft (1.2 m) of freeboard above the maximum operating depth is necessary to contain possible foaming (4). These types of aerators are not recommended for aerobic digesters located in freezing climates, because they dissipate an excessive amount of heat from the basin contents. A better aeration and mixing system for either warm or cold climates is a submerged turbine, located about 2 ft (0.6 m) above the basin bottom, with an air sparger below it, as shown in Figure 9-10. The turbine produces excellent mixing of the digester contents and disperses the air so that all portions of the basin have sufficient DO.

Aeration equipment is usually sized to obtain sufficient mixing in the digester. If mechanical aeration equipment is used, there should be 1.0 to 1.5/hp/1,000 ft^3 (21 to 32 kW/m^3) of basin volume. If diffused air is used, there should be at least 25 to 35 scfm of air supplied per 1,000 ft^3 (20 to 28 std m^3 of air/m^3/min) of basin volume. The higher values are for sludges having a combination of primary basin solids and waste activated sludge.

The oxygen requirements for stabilization depend on the loading rate of volatile solids. This volatile solids loading rate will vary between 0.05 and 0.15 lb VSS/ft^3/day (0.8 to 2.4 $kg/m^3 \cdot d$) at 68° F (20° C) sludge temperature, with lower loading rates for lower temperatures. Assuming that up to 50 percent of the solids will be oxidized, and that the nitrogen in the organic matter will be oxidized to nitrates, the oxygen requirements will be approximately 2 times the rate of activated sludge volatile solids destroyed, and 1.6 to 1.9 times the BOD_5 of primary sludge (10).

The pH in aerobic digesters tends to drop, depending on the alkalinity available in the liquid. This drop in pH is primarily caused by the loss of alkalinity, caused by nitrification. There is a loss of about 7.2 mg/l of alkalinity (expressed as calcium carbonate) for each mg/l of ammonia-nitrogen oxidized to nitrate. If the pH drops below about 6.0, digestion may be retarded, and the addition of lime or other alkali may be required to raise the pH to between 7.0 and 7.5. However, extended aeration or oxidation ditch sludge, which is well nitrified, will have little effect on either pH or oxygen requirements.

An aerobic digester system can operate on a batch or a continuous flow basis. If digested sludge is allowed to settle, the supernatant can be recycled to the treatment plant. In a batch system, the aeration can be shut off for 2 to 5 hours without problems and the solids allowed to settle. The supernatant should be decanted from several feet below the surface, before more raw sludge is added and aeration started up again.

If activated sludge alone is being digested, the solids will thicken by gravity to 2 to 3 percent by weight (if mixed with primary solids, they should thicken to a higher percentage solids). In a continuous system, the digester should be followed by a settler/holder unit, whose hydraulic overflow rate should be less than about 100 to 150 gpd/ft^2 (4 to 6 $m^3/m^2 \cdot d$) (14). Some means of aeration and mixing may be needed, if the sludge is to be held overnight for further processing.

The supernatant from average aerobic digesters would have the characteristics shown in Table 14-4 if the digestion were continued until the volatile solids were reduced by at least 40 percent and quiescent settling conditions were maintained for several hours before the supernatant was drawn off. Supernatant from properly operating aerobic digesters at municipal treatment plants can ordinarily be returned to the aeration chamber without causing difficulties.

TABLE 14-4

CHARACTERISTICS OF SUPERNATANT FROM AEROBIC DIGESTERS

pH	6.5-7.5[1]
BOD, mg/l	100-500
COD, mg/l	200-1,500
SS, mg/l	100-500
Nitrogen	
Ammonia, mg/l	0-10
Nitrate, mg/l	200-500
Total phosphorus as P, mg/l	50-200

[1] For air aeration, if wastewater alkalinity is above 250 mg/l.

The volume of supernatant plus sludge liquor after dewatering will average about 1 to 2 percent of the wastewater flow. Detailed information on the design of aerobic digestion systems is contained in references (1), (2), (3), (4), and (10).

14.3.2 Lime Treatment

Land disposal of raw sludge that has not been stabilized is objectionable, because the sludge contains a large quantity of pathogenic mircroorganisms. Adequate anaerobic or aerobic digestion reduces the number of these organisms significantly. Raw sludge also decomposes rapidly, because of the presence of readily degradable volatile solids, with resultant production of odors and other nuisance conditions. Adding lime to raw or digested sludges and raising the pH to between 11.0 to 11.5 reduces the number of pathogenic organisms (1) (15) (16). The addition of lime, with the resultant rise in pH, also suppresses rapid decomposition of the highly volatile solids, preventing odorous conditions if the sludge is disposed of in sufficiently thin layers on the land or in a sanitary landfill. Lime-stabilized raw sludge dewaters well on sand beds without odor problems (1). Because lime treatment does not destroy organic material, the pH eventually falls and bacterial action slowly develops. However, if the pH is raised to between 12.2 to 12.4 and then kept above 11 for 14 days, the sludge will be stabilized (1).

A U.S. EPA sponsored study (17) indicated that the lime dosage required to keep the pH above 11 for at least 14 days (in pounds of $Ca(OH)_2$ per ton of dry sludge solids) is between

200 to 600 for septage and 600 to 1,000 for biological sludge. Some testing should be performed to establish the dosage required. Reduced lime dosages are possible, if the lime-stabilized sludge is placed on the land or drying beds in layers thin enough to allow drying under the prevailing climatic conditions, before bacterial action can be regenerated.

14.3.3 Anaerobic Digestion

In anaerobic digestion, the more readily biodegradable solids are converted to gases such as methane (CH_4), carbon dioxide (CO_2), and ammonia (NH_3). The latter remains in solution as the ammonium ion at normal pH. The volatile solids in the digested sludge are generally reduced by 40 to 60 percent. With the incoming solids averaging 80 percent volatile matter, the result will be a total solids reduction of 32 to 48 percent. The remaining solids are easier to dewater and do not undergo rapid putrefaction if disposed of in sanitary landfills.

There are two phases in the anaerobic digestion process. In the first step, a wide variety of organisms called acid formers breaks down complex organics to volatile organic acids. In the second step, a special group of bacteria known as methane formers breaks down the organic acids into CH_4 and CO_2. These bacteria are strict anaerobes and are inhibited by the presence of any DO. The reproduction rate of methane forming organisms is very low, compared with other bacteria. For instance, their doubling time is about 4 days, while for the acid formers it is only several hours. Thus, anaerobic digestion is controlled and the rate is limited by the methane formers. These organisms are also very sensitive to pH (optimum is near 7.0) and to a variety of substances, such as heavy metals, chlorinated hydrocarbons, and soluble sulfides.

Stabilization of the solids and significant reduction in BOD does not occur until the methane organisms become active. It may take several weeks after a digester is started up and optimum conditions become established for this to occur. During this period, the rapid production of organic acids may cause the pH to drop and thereby inhibit the development of methane bacteria. If this process occurs, it may be necessary to add lime to adjust the pH. After equilibrium conditions between the acid formers and the methane bacteria become established, the pH is maintained near neutral. Alkalinity is produced, because the NH_3 reacts with the CO_2 and forms ammonium carbonate. Good production of CH_4 gas means that a digester is working properly.

There are two general types of anaerobic digestion systems in use: the older conventional system (without mixing), known as the low-rate system; and the completely mixed, high-rate system. In the low-rate system, sludge is added near the top and withdrawn from the bottom. Stratification develops with a scum layer on top; a supernatant with relatively low SS next; and active digesting layer; and, finally, a layer of settled and stabilized sludge on the bottom. Generally, only about one-half of the digester volume can be considered active. The low-rate system is no longer recommended for sludge processing.

In the currently preferred high-rate system, the entire contents of the digester are mixed. Thus, the entire volume is actively digesting and conditions are essentially uniform through-

out the entire volume. There are two types of mixing systems commonly employed. In one type, a turbine is located in the upper part of the digester, with the turbine drive located on the roof of the tank. The turbine may be unconfined or in a draft tube (Figure 14-5). The mixing can also be accomplished by compressing the gas generated during digestion and diffusing it near the digester bottom, to secure a gas-lift pumping action (Figure 14-6).

The temperature in digesters should be between 85° F (29° C) and 95° F (32° C). They are heated by circulating sludge through an external heat exchanger, using water heated in a boiler burning the CH_4 gas generated by the digestion process. The boilers are equipped with burners, which can use either the CH_4 gas or, as a standby, natural gas or oil if digester gas is not available. It is difficult to keep a uniform temperature in a small digester in the winter, because lower temperatures tend to prevent reliable, continuous CH_4 production.

The design basis for mixed (high-rate) digesters includes two criteria. One is based on retention time and the other on solids loading. Theoretically, the retention time criterion should be solids retention time; however, it has been customary to use hydraulic retention time. For completely mixed digesters, the solids retention time is equal to the hydraulic retention time unless the outflow solids are thickened and recycled, which is not usual practice. The detention time necessary for high rate mixed units should be about 10 to 20 days. The higher figure is preferable because better separation of the solids from the liquid in the digester outflow is obtained. Digesters having very short retention times (about 10 days) usually are plagued with supernatants having high SS concentration and sludge that thickens poorly.

The solids loading criterion is 0.15 to 0.40 lb VSS/ft^3/day (2.4 to 6.4 kg/m^3·d) for mixed (high-rate) units.

With completely mixed digestion, it is usual (and frequently required by regulatory agencies) to use two tanks in series. The first is referred to as the primary digester, the second, of equal size, as the secondary digester. This latter tank permits solids from the primary unit to separate and settle under quiescent conditions. Provision for gas storage is made in both tanks and, normally, the primary unit has a floating cover. The liquid supernatant is drawn off the second tank for treatment or recycling to the plant. Frequently, the second tank is equipped with mixing equipment and can be heated, similarly to the primary unit, so it can replace the primary digester when that unit is taken down for maintenance. It can also be equipped to act as a thickener.

The gas production from digesters is estimated from the volatile solids loading. The value used is 8 to 12 ft^3/lb (0.5 to 0.75 m^3/kg) of volatile solids added. Digester gas is about 65 percent CH_4 and has about 650 Btu/ft^3 (19.5 kJ/m^3). In comparison, natural gas, which is nearly 100 percent CH_4, has about 1,000 Btu/ft^3 (30 kJ/m^3).

Anaerobic digester supernatant has a high concentration of pollutants and must be separately treated or recycled to the treatment plant. The method of handling should minimize any degradation of the final plant effluent quality. The usual range of concentrations of various pollutants for digesters processing mixtures of primary and

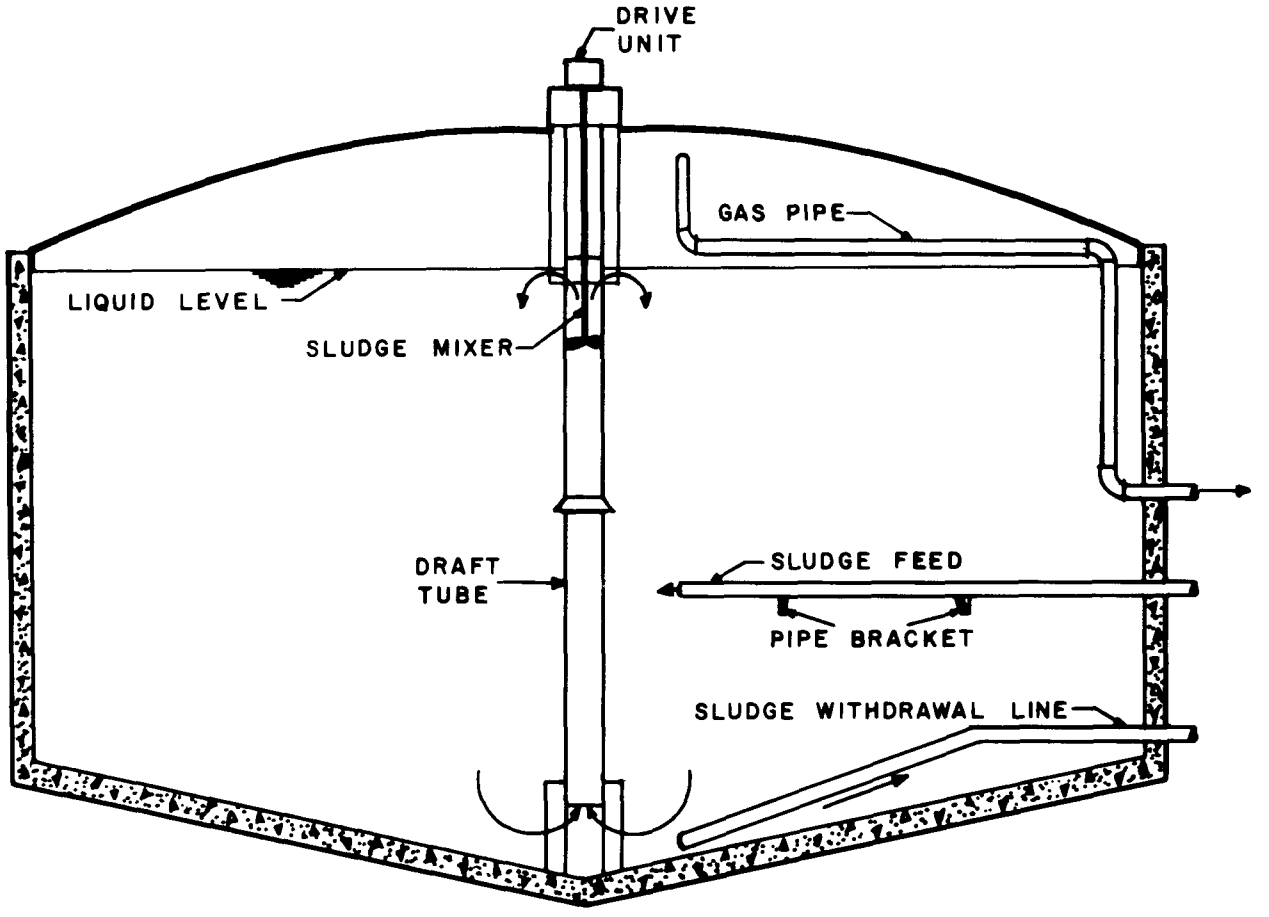

FIGURE 14-5

DIGESTER WITH MECHANICAL MIXER

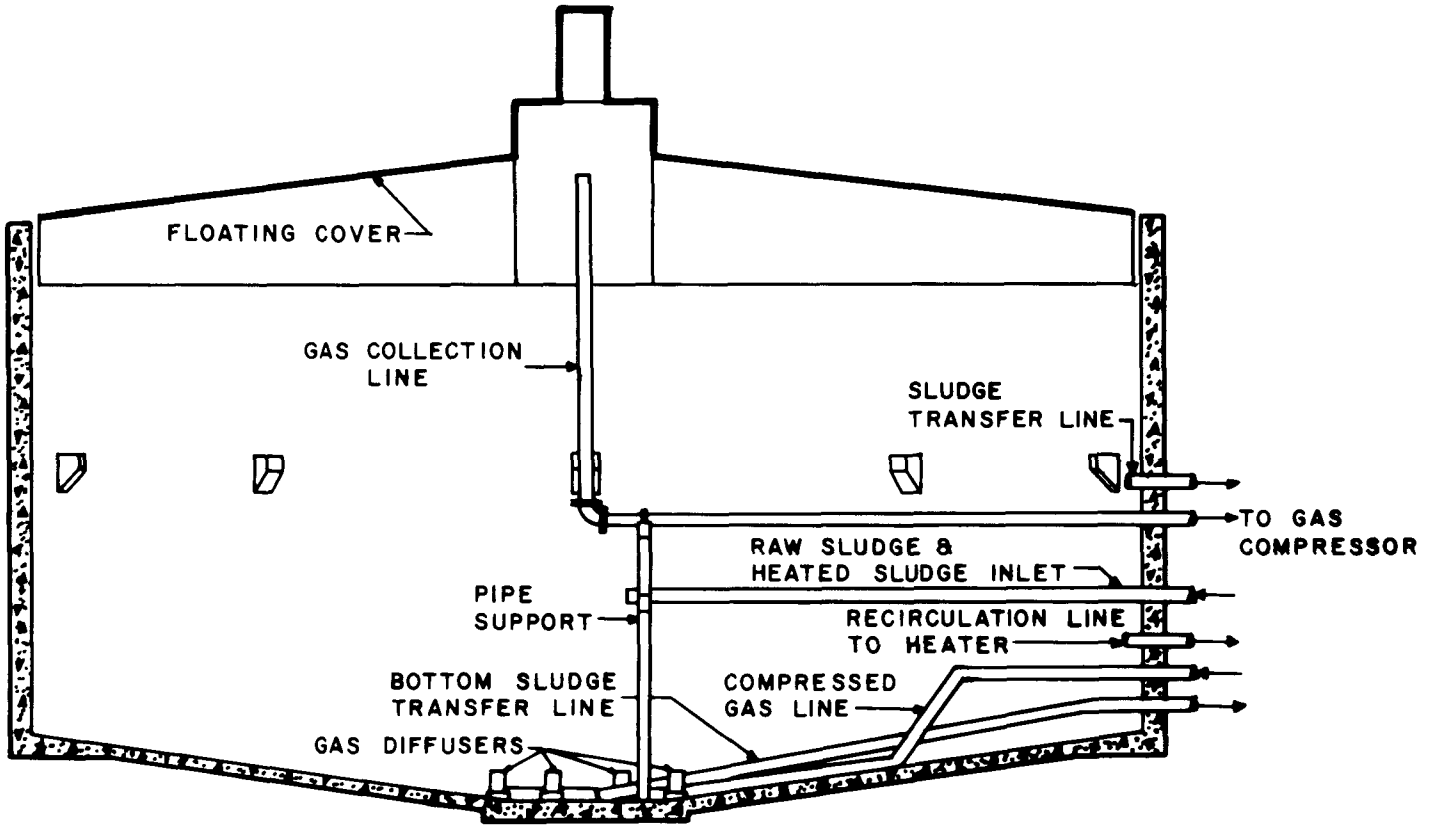

FIGURE 14-6

DIGESTER WITH GAS MIXING

secondary sludges is given in Table 14-5. The lower figures in the ranges can be expected with two-stage digestion at well-operated, smaller plants.

TABLE 14-5

CHARACTERISTICS OF ANAEROBIC DIGESTER SUPERNATANTS

	Primary and Trickling Filter Plants	Primary and Activated Sludge Plants
pH	6.9-7.1	6.9-7.1
BOD, mg/l	1,000-5,000	2,000-7,000
COD, mg/l	2,000-10,000	4,000-12,000
SS, mg/l	1,000-5,000	3,000-10,000
Ammonia-Nitrogen, mg/l	400-600	400-1,000
Total Phosphorus as P, mg/l	100-300	300-700

The volume of supernatant and liquor from sludge dewatering, such as the filtrate or centrate, with the above indicated concentration of pollutants, will average about 1.0 to 1.25 percent of the volume of wastewater treated. The supernatant characteristics shown in Table 14-5 are for domestic wastewater.

14.4 Dewatering

Dewatering is the removal of a large portion of the entrained liquid in a sludge to facilitate its final disposal. Further information on this and other aspects of sludge processing can be found in reference (13).

14.4.1 Sludge Conditioning

For most dewatering operations, a sludge must be conditioned first. In general, conditioning encompasses those processes involving biological, chemical, or physical treatment (or the combination of these) to make the separation of water from sludge easier. According to this definition, anaerobic and aerobic digestion are conditioning processes, in addition to being stabilization processes. However, digestion does not provide sufficient conditioning to dewater the sludge with mechanical equipment, although such sludges do dewater on sand beds. Small wastewater treatment plants generally employ stabilization and sand bed dewatering. Therefore, sludge conditioning is not treated comprehensively in this text.

Raw and digester sludges can be conditioned chemically to facilitate dewatering. Drying time (and bed area) may be reduced by up to 50 percent (9). Such chemical treatment breaks down the colloidal-gelatinous nature of wastewater sludge, so that the water can be separated more readily. The inorganic chemicals most commonly used are ferric chloride or

alum, combined with lime, with ferric chloride generally preferred. Ferric chloride or alum, without lime, does not prevent development of odors. A dosage of 1 lb of commercial alum per 100 gallons (1.2 kg/m^3) of digested sludge has been used successfully (11). With raw sludge, lime should always be used if the sludge is to be disposed of on land or in a landfill, so that the pH can be raised to at least 11. This addition of lime will accomplish some disinfection, delay decomposition, and suppress odors. The usual amount of ferric chloride is about 3 percent of the weight of dry solids being dewatered, and the lime dosage is about 10 percent of the dry solids. These dosages will, of course, vary with the types and character of sludge. Laboratory tests, such as the leaf test for vacuum filters, can be used to establish proper chemical dosages. Some binding of the beds may result from excessive use of inorganic chemicals (9). If chemicals are used, they should be mixed with the sludge immediately prior to application on the beds.

Polymers can be used for conditioning, and they have the advantage of simplifying chemical handling systems. However, they are expensive and their use will not suppress odors or influence the decomposition rate if sludge is to be applied on land or in landfill. Therefore, they are not suitable for use with raw sludges unless the sludge is to be incinerated; in which case, polymers will not add significant quantities of solids to the sludge (in contrast to lime and ferric chloride conditioning).

Heat treatment of sludge accomplishes conditioning and disinfection (10). This treatment is carried on in specially designed reactors, in which the temperature of the sludge is raised to about 350° to 400° F (175° to 205° C) and is held for about 30 minutes at a pressure of about 250 psi. Because of the complexity of the equipment and its high initial cost, this process is seldom feasible for small treatment plants. More information on the use of heat to condition sludge is contained in references (1), (3), and (4).

14.4.2 Sand Beds

At small treatment plants, digested or conditioned raw sludges are usually dewatered on sand beds. Dewatering occurs by drainage and evaporation. The moisture content is usually reduced to between about 40 and 75 percent on the beds (9). Normally, the drainage occurs mostly in the first 2 days, after the sludge is pumped out on the bed. The drainage liquid is collected in an underdrain system and returned to the treatment plant. The drainage from sand beds, although it requires further treatment, usually will not require pretreatment before being returned to the plant influent structure. If the sludge has been digested aerobically, it may have high concentrations of nitrates or phosphates. If the removal of the nitrogen or phosphorus from the plant effluent is a discharge permit requirement, the effect of recycling the sand bed drainage should be carefully considered. After the first 2 days, most of the dewatering takes place by evaporation, causing shrinkage horizontally and opening vertical cracks, enhancing the evaporation and allowing some additional drainage.

For details of sand bed design, references (1), (3), and (4) and especially (9) should be consulted. The nature of the sludge and climatic conditions determine the required area of sludge drying beds. Lime stabilization and sand bed dewatering, for handling peak sludge loads during emergency periods, should be considered in the design studies of new or upgraded facilities.

The sand bed areas required for drying domestic wastewater sludges are listed in Table 14-6.

TABLE 14-6

CRITERIA FOR THE DESIGN OF SANDBEDS (1) (3) (9)

Type of Sludge	Area[1] ft^2/capita	Sludge Loading Dry Solids $lb/ft^2/yr$
Primary	1.0-1.5	27.5
Primary and Standard Trickling Filter	1.3-1.7	22.0
Primary and Activated	2.0-3.0	15.0
Primary and Chemically Precipitated	1.8-2.2	22.0
Digested Raw (Lime Treated) Sludge	2.0-2.5	20.0

[1]The actual area required should be based on laboratory tests of typical sludge, taking expected climatic conditions into account.

If the sand beds are covered, the area can be reduced 25 to 35 percent; however, covering is excessively costly (1). In the southern U.S., smaller areas can be used. Dewatering raw sludge on sand beds is not recommended unless the sludge has been conditioned with lime at a pH above 11, because of poor drying conditions.

The beds are constructed by laying drainage tiles about 8 to 10 ft (2.4 to 3.0 m) apart on an impervious layer of soil or on an artifical material, such as asphalt. A layer of graded gravel is then placed to a depth of 6 to 12 in. (0.15 to 0.30 m) above the top of the tiles, with the top 3 in. consisting of 1/8- to 1/4-in. (3 to 6 mm) gravel. On top of the gravel is a 10- to 18-in. (0.25 to 0.45 m) layer of sand, having an effective size between 0.30 and 1.20 mm and a uniformity coefficient of less than 5.0.

Beds are usually 15 to 25 ft (4.5 to 7.5 m) wide and sufficiently long to provide the area needed for a digester drawdown or other single bed loading. Usually, one sludge discharge pipe per sand bed is sufficient. If the sludge is thick, multiple discharge pipes should be provided, especially on large sand beds, so that the sludge can be distributed properly. Each discharge pipe should terminate at least 12 in. (0.3 m) above the bed surface. Splash plates should be provided at the pipe ends to promote even distribution and prevent sand disruption. A dosing depth of 8 to 12 in. (0.2 to 0.3 m) of sludge is usually employed, with the optimum depth varying at each location, depending on prevailing weather conditions.

There should be at least three beds, to provide flexibility in operation. The number of bed applications of sludge per year will, of course, depend on climatic conditions and the sand bed area. Usually, 6 to 10 applications per year are possible, depending on the dryness of dewatered sludge cake required for the selected type of disposal, the length of the drying

season, and the humidity patterns. The dried sludge cake is usually removed manually in smaller plants. The sludge can be transferred to trucks by building a pair of concrete runway strips along the center of the beds.

After the dried sludge is removed by hand (using forks) or by machine, the drying beds require maintenance. Small sludge particles and weeds should be removed from the sand surface. Periodically, the bed should be disked and the top layer of sand replaced. Usually, resanding is advisable when 50 percent of the original sand depth is lost, or when the sand depth is down to 8 in. (0.2 m). Resurfacing sludge beds is perhaps the major expense in sludge bed maintenance.

Underdrains occasionally become clogged and have to be cleaned. Valves or sluice gates, controlling sludge flow to the beds, must be kept watertight to prevent wet sludge from leaking onto the beds during drying periods. Drainage of lines should be provided. Lines with sludge in them should not be shut off until they are flushed out. Partitions between sand beds should be so tight that the sludge will not flow from one compartment to another, especially if the sand surface is taken down too low. The outer walls or banks around the beds also should be watertight. Grass and other vegetation on banks should be kept cut.

14.4.3 Belt Filters

These units appear to be well suited to the smaller plant. A belt filter is a continuously moving, horizontal, porous belt, onto which the conditioned sludge is discharged. After the sludge has been distributed, an impervious belt (also continuous) is pressed down on the sludge layer by rollers, thus squeezing the water out. With primary and activated sludge having 0.5 to 1.0 percent solids, a cake of 18 to 25 percent solids has been obtained (18). Several designs of these units are available at present (19) (20) (21) (22) (23).

14.4.4 Vacuum Filters

Mechanical dewatering will usually not be economical for smaller plants, although it should be considered and evaluated in certain cases for plants about 0.5 to 1.0 mgd in size. The most common mechanical dewatering device is the rotary vacuum filter, of which two types are available: the drum type, having a fabric attached completely around the drum periphery; and the belt type, having stainless steel coils or cloth belts, which leave the drum periphery at one point in its rotation. Filtrate quality depends on the sludge conditioning process that precedes the filter.

The solids loading that can be applied to a filter is very much dependent on the solids concentration in the feed. Digested primary sludge, composed of 7 to 9 percent solids, can be handled at a loading of 4 to 8 $lb/ft^2/hr$ (20 to 40 $kg/m^2 \cdot h$), resulting in a cake that is 20 to 28 percent solids. A mixture of primary and activated sludge, composed of about 4 percent solids, can be handled at a loading of 4 to 5 $lb/ft^2/hr$ (20 to 25 $kg/m^2 \cdot h$), resulting in a cake that is 18 to 24 percent solids. If the conditioning process uses inorganic chemicals, the resulting inorganic solids must be included in calculating the loading rates.

The important auxiliary equipment needed with a vacuum filter are: sludge conditioning tank with mixer, sludge cake conveyor, vacuum pump, filtrate receiver, and pump. For waste activated sludge taken from an extended aeration plant, in which the sludge moisture content is about 99 percent, a thickener and holding tank would also be needed. A filter leaf test unit, with the same medium as the actual filter, is essential for determining the optimum chemical dosage prior to application of the sludge on the filter.

14.4.5 Centrifuges

These dewatering units would not likely be considered for a 1-mgd (43.8 l/s) plant or smaller. The most commonly used dewatering centrifuge for wastewater sludges is the horizontal, solid-bowl unit. It operates on a continuous basis, receiving any pumpable sludge. For waste-activated and primary sludge, after conditioning with a polymer, a cake of 15 to 25 percent solids can be produced. The solids capture of a centrifuge is not usually as good as that of vacuum or belt filters, but chemical conditioning can improve it significantly. When primary sludge is dewatered in a centrifuge, it should be degritted to a high degree to prevent excessive abrasion on the bowl. The chief advantages of the centrifuge over a vacuum filter are the reduced space requirements and the minimal exposure of the sludge to the atmosphere (which reduces odor nuisances).

Another type of centrifuge being adapted to wastewater sludge dewatering is the basket centrifuge, which is essentially a batch unit. The basket centrifuge is able to obtain a drier cake and a better quality centrate than the solid-bowl centrifuge because of improved solids capture. However, it is usually more expensive than the solid-bowl unit.

The quantity of SS in the centrate from the various types of centrifuges depends on the type of unit used. Centrates from solid-bowl units have high SS, up to 5,000 to 10,000 mg/l.

14.5 Sidestreams Produced

Wastewater treatment plants produce various liquid sidestreams, most of which are generated in the different sludge processing steps. The general characteristics of various sidestreams are listed in Table 14-2. In sections 14.3.1 and 14.3.3, the supernatants from aerobic and anaerobic sludge digesters were described. For digested sludges, the characteristics of the liquor produced (such as filtrate or centrate) will depend on the chemical conditioning of the sludge before dewatering (refer to section 14.4.1). Thus, conditioning with lime and ferric chloride will precipitate phosphates in the sludge liquor, and they will be retained in the sludge cake. However, the NH_3 and any soluble BOD present will not be affected and will remain in the liquid sidestream. Conditioning with polymers will have no influence on the soluble pollutants in the liquor.

When raw, undigested sludge is processed, the major pollutants are the SS and associated BOD. A gravity thickener overflow can have SS of from 100 to 1,000 mg/l and BOD_5 in the range of 50 to 1,000 mg/l. The volume of such streams can be calculated from the difference in the solids content of the inflow and outflow sludge streams. It will normally average about 2 to 3 percent of the wastewater volume being treated.

It is important that all the pollutants that can affect the quality of the final plant effluent be identified in all recycled sidestreams. Then, the load, in pounds per day (kg/d), should be calculated and added to the load coming into a process with the raw wastewater. In making cost-effectiveness analyses, the additional plant capacity required to handle loads from the recycled streams is chargeable to the process that originates those streams. The BOD and NH_3 loads, for example, from recycled anaerobic digester supernatants can add 20 to 50 percent to the load in the incoming wastewater.

Some sidestreams, such as those produced during tertiary treatment, can be produced from processes other than those associated with sludge processing. The major sidestream of this type is the backwash water from granular media filters or carbon columns. The principal pollutant in this sidestream is the SS. These sidestreams are produced at an instantaneous rate equal to five to eight times the normal hydraulic loading to the filters or columns. For small plants, in which there are only two or three such filters or columns in parallel, this backwash rate exceeds the plant inflow rate. Therefore, it is not practical to recycle such streams directly to the treatment plant. Such backwash streams can be discharged to holding basins, with air or mechanical agitation to keep the SS in suspension, and then recycled back to the head of the plant or to a point where coagulation and settling of the SS will occur. The average concentration of the SS will be 300 to 1,500 mg/l and these backwash streams usually average 2 to 5 percent of the plant hydraulic inflow.

14.6 Septage Handling

The handling of wastes pumped from septic tanks (septage) can be a significant problem for small treatment plants. Many smaller communities have surrounding areas where residences are served by septic tanks, their contents periodically pumped into tank trucks by private operators. Frequently, the tank trucks discharge their contents haphazardly into manholes of a sewer system connected to a treatment facility or hauled to the treatment plant and discharged directly into the plant influent wet well. Such discharges can have serious and detrimental effects on the performance of treatment plants (particularly small ones) and, hence, many such plants have terminated this practice.

Larger facilities are not nearly as susceptible to these effects, because they usually have a smaller ratio of septage to raw wastewater. Smaller facilities should use receiving facilities and holding tanks for "bleeding" a smaller continuous septage flow into the wet well.

Septage is highly variable, as the characterization data in Table 14-7 indicate. It is odorous, and can impose shock loads on treatment plants, causing upsets of primary clarifiers, secondary processes, and anaerobic digesters (24).

The amounts of extra solids, BOD, and NH_3 loading should be calculated to determine how the various processing units will be affected and to determine the necessary design capacity. The oxygen demand on the plant can, for example, be increased substantially.

If the septage-to-wastewater ratio is large enough to overload the plant facilities, consideration should be given to providing equalization facilities or an independent septage

TABLE 14-7

TYPICAL CHARACTERISTICS OF SEPTAGE

BOD_5, mg/l	2,500-20,000
COD, mg/l	10,000-70,000
SS, mg/l	2,500-100,000
Volatile solids, percent	50-80
Ammonia nitrogen, mg/l	100-500
Organic nitrogen, mg/l	100-1,500

treatment facility. The equalization facility may consist of a covered aerated holding tank with the capacity to hold the maximum septage expected at the plant in 24 hours. Because the air will strip sulfides, which should be oxidized before release to the atmosphere, some treatment of the vented air from the holding tank should be provided. Methods of treatment may include ozonation, bubbling the odorous air through chlorinated water, or discharge through activated carbon or soil beds (see Chapter 2). If the septage contains large solids, it should be macerated before entering the holding tank. Enough air should be provided to keep the holding tank contents aerobic and to keep the solids in suspension.

If the septage haulers indiscriminately include raw wastewater from pit toilets, wastewater from camping trailers and dockside pump-out stations, waste motor oil from pumping stations, cutting oil, and other hard-to-treat wastes from local small industries, a permit system, allowing discharge under specified circumstances into the wastewater collection or treatment system, must be established *and enforced* if the effluent requirements are to be met consistently.

14.7 Sludge Disposal

Final disposal of the sludge will be made directly to agricultural land, to sanitary landfills, or to an incinerator. Digested sludge can be spread on agricultural land, and many studies are currently in progress on the various aspects of this method of final disposal (9) (25). Because digestion does not guarantee destruction of all pathogens, appropriate measures should be taken to prevent health hazards in applying sludge to land. Other concerns are the effects of nitrogen compounds (especially ammonia and nitrates) and heavy metals (such as zinc, copper, and nickel), which are concentrated in sludges from normal domestic wastewater, even if no industrial waste enters the system.

Nuisance-free disposal of liquid sludge on cropland requires high-quality digestion to reduce pathogen content and to prevent odorous putrefaction. Storing digested sludge in ponds permits more complete die-off of pathogens. Also, such storage, if aerated, permits nitrification of the high NH_3 concentration in the sludge, which otherwise might inhibit seed germination. Storage is required if the ground is frozen and land application is not practiced.

Because the sludge is high in nitrogen, and nitrate-nitrogen is not readily retained in most soils, crops that have a relatively high demand for nitrogen should be planted. The chance of polluting the groundwater with nitrates should be minimized by limiting nitrogen loadings to the probable demand.

Distribution of liquid sludge may be made by furrow irrigation or by sprinkler irrigation. In the northern United States, application of sludge is limited to periods when the ground is not frozen. During the winter, the sludge is held in ponds.

In places where sludges from domestic wastewaters (without any industrial wastes) have been applied to agricultural land for extended periods (such as in England), the accumulation of heavy metals in the soil usually has not been a problem (26), possibly because of the relatively low rate of application–not exceeding 5 tons of dry solids per acre per year. Lime in soils can make the metals complex and keep them insoluble and unavailable to plants. Usually, soils that have had prolonged application of wastewater sludge will become acidic and require periodic liming (27).

Incineration of dewatered wastewater sludge from wastewater treatment plants of 1 mgd in size is generally not economical, unless the incinerator is also used for garbage and refuse. In that case, the sludge cake can be mixed with the garbage and refuse and (because of the relatively small weight and volume of the sludge) can be disposed of in this manner. However, the proportion of sludge to other solids should be kept fairly constant.

Composting dewatered wastewater sludge, both alone and mixed with garbage and refuse, has been studied (28). In the latter case, the sludges provide moisture and nutrients which are normally lacking in sufficient amounts in garbage and refuse. Composting such solids mixtures is being practiced in Europe, but various attempts at composting in this country have not, as yet, proved economical compared with other methods of disposal.

Dewatered raw wastewater solids, composed of about 75 percent moisture, can be composted alone in a mechanical composter for 8 to 10 days, using forced air to maintain proper aerobic conditions. The average temperature in the composting sludge is about 140° F (60° C), which destroys most pathogens. The final product has a moisture content of about 30 percent, an earthy odor, and a fertilizer value equal to that of cattle manure. It does not undergo putrefaction if piled outdoors and is free of viable plant seeds and indicator pathogens.

Design criteria of a unit to handle the dewatered sludge from a primary-secondary, 1-mgd (44 l/s) plant indicate that the volumetric capacity would be 1,000 ft^3 (28.4 m^3). This is about one-tenth the volume required for an aerobic sludge digester handling 2 percent solids. The power required for mixing the composting mass and supplying the necessary air is estimated to be comparable to the power required for an aerobic digester.

14.8 References

1. *Process Design Manual for Sludge Treatment and Disposal.* U.S. EPA, Office of Technology Transfer (October 1974).

2. *Process Design Manual for Upgrading Existing Wastewater Treatment Plants.* U.S. EPA, Office of Technology Transfer (October 1974).

3. *Municipal Wastewater Treatment Plant Sludge and Liquid Sidestreams.* Camp Dresser & McKee (in press, 1974).

4. "Sewage Treatment Plant Design," WPCF *Manual of Practice No. 8* (at press, 1975).

5. Vesilind, P.A., *Treatment and Disposal of Wastewater Sludges.* Ann Arbor, Michigan: Ann Arbor Science Publishers (1974).

6. *Direct Environmental Factors at Municipal Wastewater Treatment Works.* U.S. EPA, Office of Water Programs Operation (at press, 1975).

7. *Glossary-Water and Wastewater Control Engineering.* APHA, ASCE, AWWA, WPCF (1969).

8. *Link Belt Thickeners.* Book 2959.

9. "Sludge Dewatering." WPCF *Manual of Practice No. 20* (1969).

10. *Wastewater Engineering.* Metcalf & Eddy Inc., New York: McGraw-Hill (1972).

11. Katz, W.J., and Geinopolos, A., "Sludge Thickening by Dissolved Air-Flotation." *Journal Water Pollution Control Federation,* 39, p. 946 (1967).

12. "Anaerobic Digestion." WPCF *Manual of Practice No. 16.*

13. Burd, R.S., *A Study of Sludge Handling and Disposal.* FWPCA publication WP-20-4 (May 1968).

14. Smith, R., Eilers, R.G., and Hall, E.D., *A Mathematic Model for Aerobic Digestion.* National Environmental Research Center, Cincinnati (July 1973).

15. Doyle, C.B., "Effectiveness of High pH for Destruction of Pathogens in Raw Filter Cake." *Journal Water Pollution Control Federation*, 39, p. 1403 (1967).

16. Farrell, J.B., Smith, J.E., Hathaway, S.W., and Dean, R.D., "Lime Stabilization of Primary Sludges," *Journal Water Pollution Control Federation,* 46, p. 113 (1974).

17. Courts, C.A., and Schuckrow, A.J., *Design, Development and Evaluation of Lime Stabilization System to Prepare Municipal Sewage Sludge for Land Disposal.* Pacific Northwest Lab, Battelle Institute (1974).

18. DaVia, P.G., *Capillary Action Applied to Sludge Dewatering.* International Water Conference, Pittsburgh (October 1972).

19. Imhoff, K.R., *Sludge Dewatering Tests with a Belt Press.*

20. *The Automatic Belt-Filter Press.* Bulletin, Carter Co. (April 1972).

21. Goodman, B.I., and Higgins, R.B., *Concentration of Sludges by Gravity and Pressure.* Presented at WPCF Annual Conference, Boston (October 1970).

22. "The DCG Solids Concentrator." Permutit Co., Bulletin No. 5161 (1972).

23. Hedenland, I.D., "District Goes Into Reclamation Business." *Water and Wastes Engineering,* 10, p. 30 (March 1973).

24. Kolega, J.J., "Design Curves for Septage." *Water and Sewage Works,* p. 132 (May 1971).

25. *Recycling Treated Municipal Wastewater and Sludge Through Forest and Cropland.* Pennsylvania State University, College of Agriculture.

26. *Agricultural Use of Sewage Sludge.* Notes on Water Pollution, Department of the Environment, Great Britain (June 1972).

27. Hinesly, T.D., and Soseqitz, B., "Digested Sludge Disposal on Crop Land." *Journal Water Pollution Control Federation,* 41, p. 822 (1969).

28. Hart, S.A., *Solid Waste Management: Composting.* Report No. SW-2C, U.S. Department of HEW, Solid Wastes Program (1968).

CHAPTER 15

DISINFECTION AND POSTAERATION

15.1 Introduction

Disinfection is the process of destroying pathogens, including viruses, and other harmful micro-organisms. Chemical agents are most commonly used to disinfect wastewater, although this disinfection can also be accomplished using radiation, mechanical means, and physical agents.

The most common chemical disinfectant used in wastewater treatment is chlorine. Other possible chemical disinfectants include ozone, iodine, bromine, and alkalies (pH's above 11 are relatively toxic to pathogens). Ozone, ultraviolet light, and bromine chloride are currently being evaluated by the U.S. EPA to determine their potential use in disinfecting wastewater treatment plant effluents.

Mechanical removal of micro-organisms from wastewater is accomplished to some extent by flocculation, settling, screening, or adsorption. Treatment processes exhibiting significant removal of bacteria include high pH lime treatment, series wastewater treatment ponds, coagulation with alum or iron salts, carbon adsorption, activated sludge, and trickling filters. However, all of these processes require provisions for terminal disinfection.

The average person discharges 100 to 400 billion coliform organisms per day (1) in about 45 grams of feces. The ratio of total coliforms to fecal coliforms in domestic wastewater is in the range of 2:1 to 4:1, and the ratio of fecal coliforms to fecal streptococci is 4:1 to 8:1 (2). Salmonella has been isolated from wastewater with total coliform counts as low as 2,200/100 ml (2). Ratios of coliforms to enteric viruses are about 92,000:1 in wastewater and about 50,000:1 in polluted surface waters (2) (3).

Ideal disinfection of wastewater kills or inactivates the pathogens present and does not continue its action beyond the treatment facility. The efficiency of chemical disinfection is primarily dependent on the adequacy and rate of mixing, contact time, concentration of disinfectant, temperature of water, efficiency of residual control system (in certain cases), pH, concentration of interfering substances and quality of operational surveillance. Of these variables, the mixing, concentration of disinfectant, contact time, and residual control system are the ones primarily affected by the facility design (4).

Two recent actions taken by the U. S. EPA with regard to municipal wastewater disinfection should be noted: 1) fecal coliform bacteria limitations have been deleted from the definition of secondary treatment; 2) disinfection of municipal effluents will be on a case-by-case basis in accordance with state water quality standards. The Federal Register of July 26, 1976 (Vol. 41, No. 144) contains further information on these points.

15.2 Chlorination

Efficiency of chlorine disinfection may also be affected by the concentration of bacteria and the concentration and reactivity of interfering or chlorine-demanding substances. Chlorination of wastewater not only kills pathogens, but usually creates chlorinated compounds such as chloramines, which can be toxic to receiving-water biota. Insufficient chlorine dosage, mixing, and contact time result in an incomplete kill of pathogens and indicator organisms. Highly effective or essentially complete disinfection can best be carried out in water free from suspended material. If the wastewater is chlorinated when SS are present, bacteria within the suspended particles may not be killed. Existing data indicate that free chlorine residuals are required for significant viral inactivation, unless prolonged contact is provided.

Four conditions usually must be met to insure inactivation of viruses by chlorination (5):

1. The turbidity of the water should be <1.0 Jtu (preferably <0.1 Jtu).
2. The pH of the water should be close to 7.5 for waters containing ammonia and <7.0 for ammonia-free waters.
3. Rapid initial mixing of water and chlorine must be provided.
4. A concentration of 0.5 to 1.0 mg/l of undissociated hypochlorous acid (HOCl) must be maintained for an actual contact period of >30 minutes.

If elemental chlorine is added to water, it is hydrolyzed and ionized to two forms: hypochlorous acid (HOCl) and the hypochlorite ion (OCl^-). In pure water systems with the pH below 7, HOCl constitutes from 75 to 95 percent, or more, of the solution; with a pH above 8, from 20 to 40 percent, or less, of the solution. The disinfection efficiency of HOCl is from 45 to 250 times greater than that of OCl^-. HOCl, also, is a very active oxidizing agent; it will react with oxidizable metals, hydrogen sulfide and organic matter present in wastewater, and is short lived in the presence of readily oxidized compounds, such as ammonia, found in wastewater. Because most wastewater effluents contain ammonia, the following reactions will occur within minutes upon adding chlorine (2):

$$NH_3 + HOCl \rightarrow NH_2Cl + H_2O$$
(monochloramine)

$$NH_2Cl + HOCl \rightarrow NHCl_2 + H_2O$$
(dichloramine)

$$NHCl_2 + HOCl \rightarrow NCl_3 + H_2O$$
(nitrogen trichloride)

The two species predominating in most cases are monochloramine and dichloramine. They are commonly referred to as the combined available chlorine. Chloramines are much less potent than hypochlorous acid as a disinfectant.

Hypochlorous acid also reacts with other organic matter in wastewater, such as amino acids, and inorganic matter such as sulfites and nitrites, to produce chlorine compounds having very little or no disinfecting power (2). Design engineers should be aware of the extent of such side reactions in determining the optimum chlorine dosages to apply to a wastewater (6).

Total chlorine residual is the sum of the combined and free chlorine concentrations remaining after a specified period of time. Chlorine demand is defined as the difference between the chlorine applied and the total residual chlorine remaining at the end of the contact period. It provides a measure of all chlorine demanding reactions, including disinfection (6).

Tests are necessary to determine chlorine demand. The amperometric titration test for chlorine residual is the most reliable, if the operator is well trained in the use of the instrument (several blank runs are made to "warm up" the instrument, and the electrodes are regularly checked (7). Lin et al. (8) recommend the modified starch iodide (MSI) method because of its simplicity, speed, economy, and dependability; and they note that it is already preferred by WWTP operators in California. Both the amperometric and the basic starch iodide tests are detailed in *Standard Methods* (9). The modified starch iodide test is detailed elsewhere (10). A field evaluation of 38 wastewater facilities indicated that the most reliable chlorine dosage control method was either 1) a residual control with an analyzer to provide control based on both change of flow rate and chlorine demand or 2) a compound loop control in which the control apparatus receives two separate and independent signals from a flow-measuring device and from a chlorine residual analyzer (4).

Figures 15-1 and 15-2 illustrate some of the concentration vs. contact time relationships for chlorine disinfection of wastewater coliforms. Figures 15-3 and 15-4 show the relative effectiveness of different forms of chlorine and the relative resistance of other organisms in pure water systems. Figure 15-5 shows the relative amounts of HOCl and OCl^- for 0° and 20° C at various pH values. A detailed discussion of all aspects of chlorination is presented in reference (12).

Careful design of chlorination facilities is essential, because it usually is relatively difficult for the operator to adjust the initial mixing, the actual contact (short-circuited) time, the method of controlling the chlorine dosage, or the pH after construction. Efficient operation of the prior treatment processes may minimize or eliminate some interfering substances, such as ammonia, calcium bicarbonates, SS, COD, and turbidity. It is particularly important in wastewater treatment pond systems that the removal of SS in the form of algal and other microbial cells be relatively complete before chlorination, if disinfection is to be effective (13). Turbidities should be kept below 1 Jtu and preferably below 0.1 Jtu, if chlorination is to inactivate viruses effectively (3).

If chlorination (either with gaseous chlorine or hypochlorite) is used, the chlorination process and the chlorine contact unit ideally should be designed to keep the chlorine residual in the effluent at a minimum level, consistent with meeting coliform removal standards. This condition can best be accomplished by providing an initial rapid mix, for

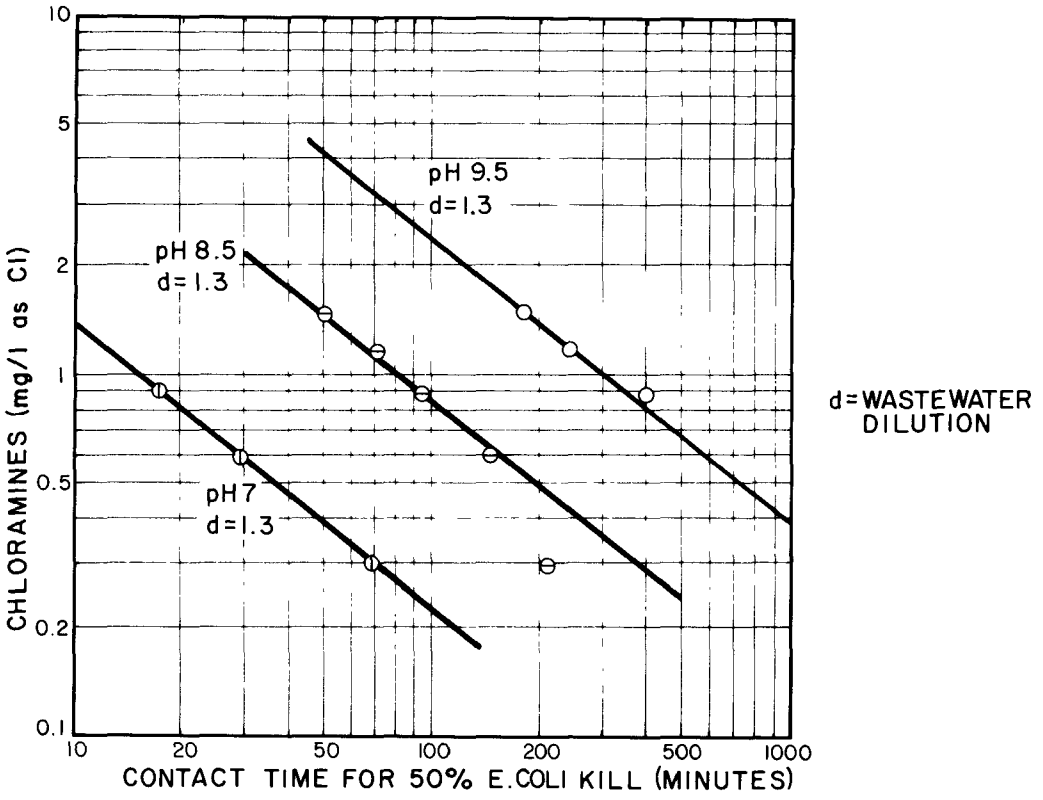

FIGURE 15-1

CHLORAMINE CONTACT TIME REQUIREMENTS (11)

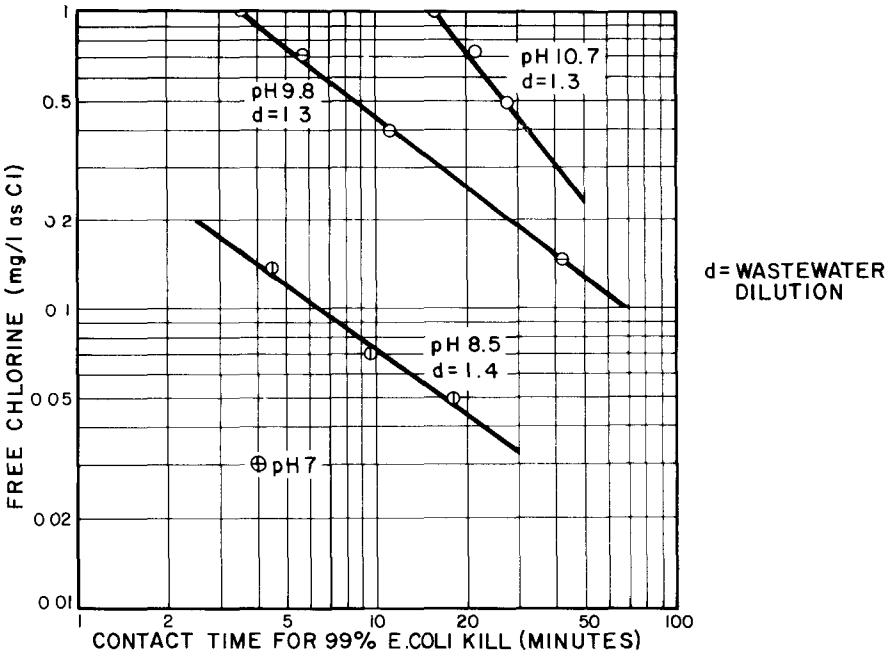

FIGURE 15-2

FREE CHLORINE CONTACT TIME REQUIREMENTS (11)

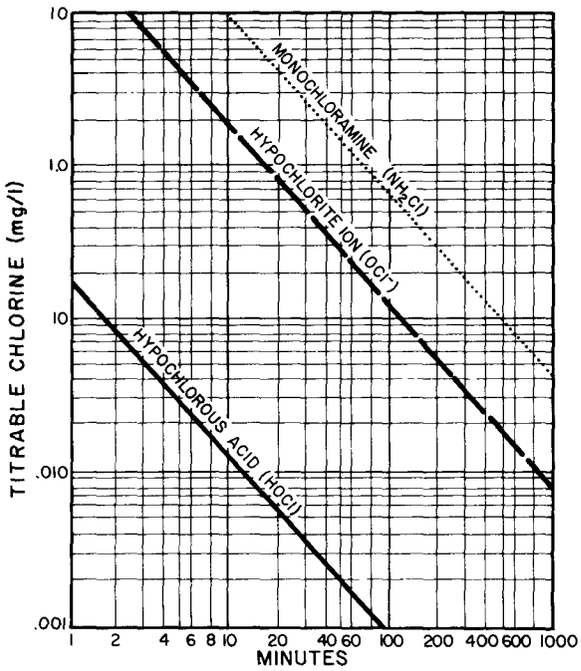

FIGURE 15-3

CONTACT TIME FOR 99% KILL OF E. COLI AT 2° – 6° C IN PURE WATER (2)

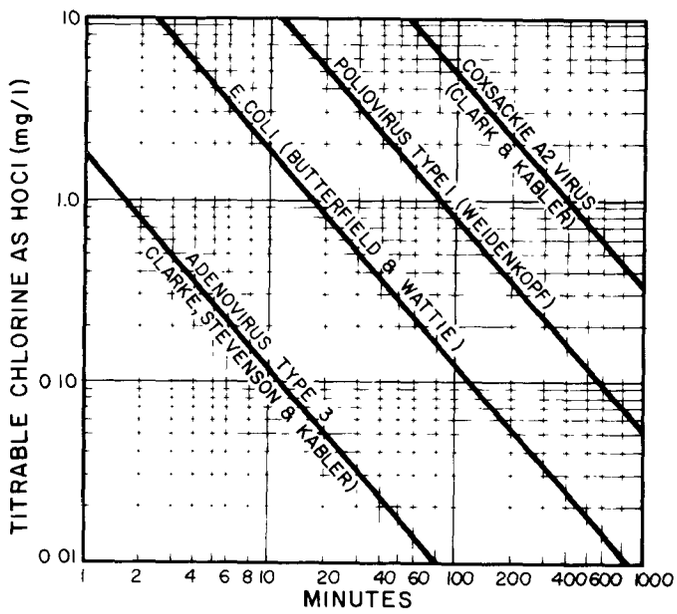

FIGURE 15-4

RELATIVE RESISTANCE TO HOCl AT 0° – 6° C IN PURE WATER (2)

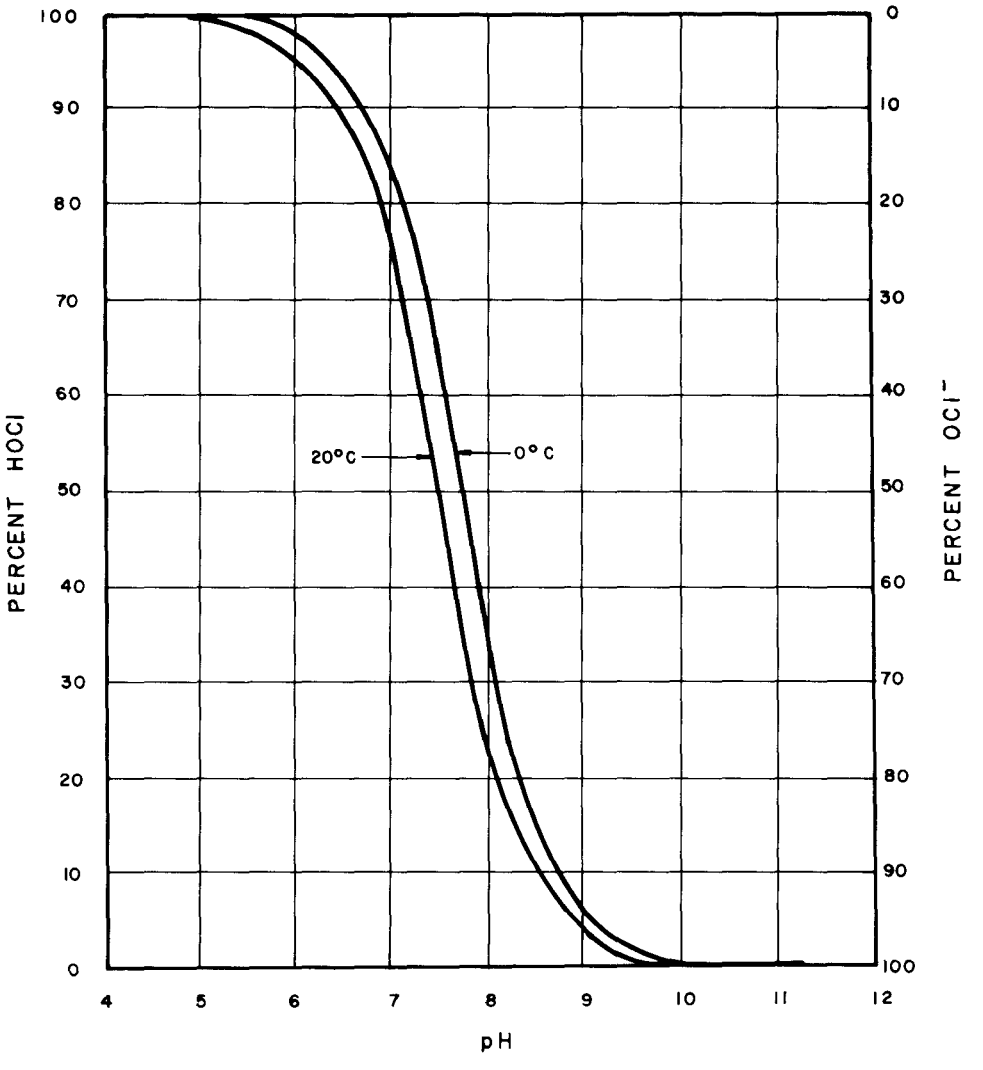

FIGURE 15-5

DISTRIBUTION OF HOCl AND OCl IN WATER WITH VARIATIONS IN pH (12)

making quick and complete contact between the chlorine and the pathogens, and followed by plug-type flow (i.e., each particle in a cross section of flow moves at the same velocity) through the contact chamber.

Chlorine-induced toxicity, from a complex of chloramine compounds in wastewater discharges, is becoming a serious environmental concern. Combined chlorine residuals may be toxic to the existing aquatic organisms (14), and dechlorination may be necessary. Dechlorination can be accomplished with reducing chemicals (such as sodium bisulfite, hydrogen peroxide, sulfur dioxide, sodium sulfite, or sodium thiosulfite) or with beds of activated carbon. Each dechlorination system requires some additional equipment and possibly pumping, necessitating cost comparisions. In small plants, the addition of sulfur dioxide or activated carbon is usually the simplest effective method of dechlorination.

When a chlorinated wastewater containing combined forms of chlorine, including chloramine, is passed through an activated carbon contactor, the following reaction seems to take place:

$$2\ NHCl_2 + H_2O \text{ surface oxides} \rightarrow N_2 + 4\ H^+ + 4\ Cl^- + \text{oxides of C}$$

releasing free nitrogen to the atmosphere and removing the possibly toxic chloramines, if contact time is sufficient (15).

Typical chlorination systems using gaseous chlorine are shown in Figure 15-6. Using the vacuum system rather than the pressure vacuum has several advantages, including (16):

1. Elimination of pressurized gas and solution feed lines
2. Elimination of manifold piping and flexible connectors while isolating auxiliary valves
3. Elimination of need for heat as gas under vacuum that does not reliquify at temperatures above about -40° F (-40° C)

Because of its obvious simplicity, the vacuum system is more desirable for small wastewater chlorination facilities.

Calcium or sodium hypochlorite provide much the same chlorinous solution as does gaseous chlorine. For example, 1 lb of active chlorine in solution is produced by 1.05 lb of NaOCl (100 percent) or 1.01 lb of $Ca(OCl)_2$ (70 percent). Calcium hypochlorite comes in tablet form for very small systems, and granular form for larger systems, requiring a solution tank and a solution feeder. Sodium hypochlorite solution can be purchased or generated onsite in amounts as low as 1 lb/day. The hypochlorite solution also eliminates the dangers of handling gaseous chlorine, although it has a relatively short storage life in solution. Care must be taken to insure that an inexpensive salt source is available, and that the extra dissolved solids from the hypochlorite generation (an increase in total dissolved solids results from the production of each mg/l of NaHOCl, depending on the efficiency of the process) will not create a treatment or disposal problem. The generator requires about 1.7 to 3.5 kWh (6.12 to 12.6 mJ) and about 2.0 to 3.3 lb of salt per pound of equivalent chlorine in

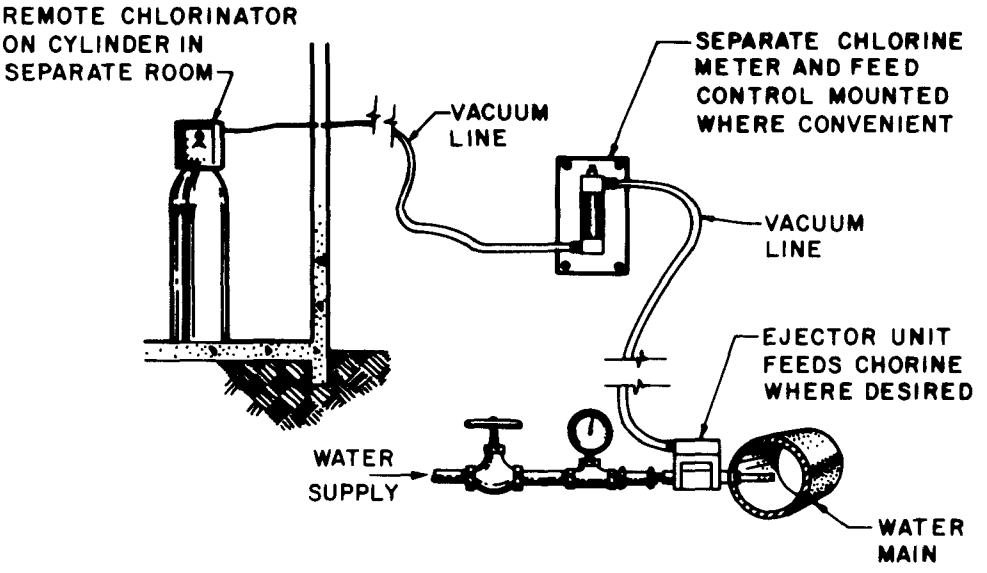

TYPICAL VACUUM CHLORINE FEED SYSTEM (20)

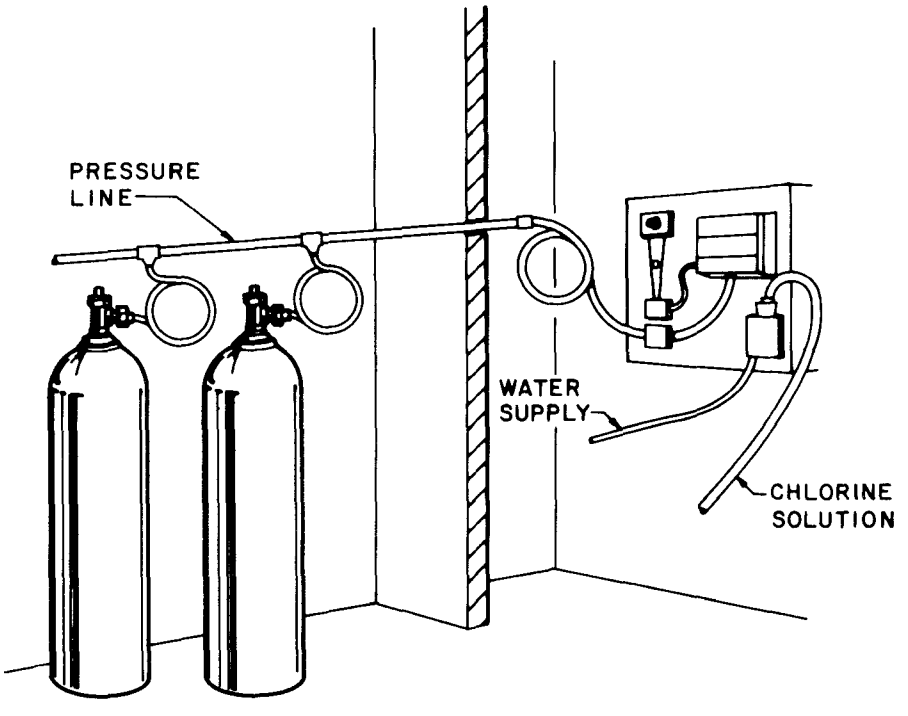

TYPICAL PRESSURE-VACUUM CHLORINE FEED SYSTEM (20)

FIGURE 15-6

GASEOUS CHLORINATION SYSTEMS

the resulting sodium hypochlorite solution. Onsite generation will not usually be cost effective for small plants, except for isolated locations with a low-cost salt source. For more information on hypochlorite generation, see references (12) and (16).

Systems for onsite generation of NaOCl for small treatment plants are shown in Figure 15-7. Some hypochlorite generation units, such as those with membrane cells, are more costly to maintain, or they require pure salt rather than rock salt or sea water. The capital costs of different units also vary considerably.

An extensive 18-month bacteriological study of the Trinity River basin indicated that, if chlorination is not efficient, bacterial populations recover as they move downstream from the effluent discharge points (20). To achieve satisfactory kill of fecal coliform, fecal streptococci, and solmonellai, the chlorination facilities must be designed to insure adequate bacteria-chlorine contact at all flows.

In designing a chlorination system, some essential factors to be considered are:

1. Selecting a reliable chlorine feed control system, keyed, if possible, to meet chlorine demand variations (usually, this means feed activated by flow-measuring devices for the smallest plants)
2. Selecting a diffuser that doses the chlorine uniformly throughout the influent stream
3. Providing excellent mixing (mechanical mixer, hydraulic jump, etc.) at the inlet end of the contactor to homogenize the chlorine and wastewater within 3 to 5 seconds of dosing (4)
4. Providing longitudinal baffles and turning vanes, if necessary, to achieve plug flow after the initial complete mixing and actually obtain the required contact time (actual equals theoretical minus short circuiting)
5. Training operating personnel thoroughly
6. Providing a means of pH control, if necessary
7. Providing dechlorination, if downstream ecology will be significantly affected by chlorinated byproducts
8. Providing nonsettling velocities in the contact chamber
9. Making adequate provision for easy cleaning of contact basin, because accumulated solids interfere with disinfection (5)
10. Monitoring the chlorine residual

Steps 5, 6, 7, and 10 are not generally fully incorporated in the design of plants treating fewer than 100,000 gpd.

15.3 Chlorine Mixing and Contacting

Once a mixing device has been constructed, its efficiency cannot be modified easily, so an effective design is very important to good chlorination. Three methods to achieve chlorine mixing are shown in Figure 15-8. The turbulence created by a hydraulic jump has proved excellent for chlorine mixing and has proved to be most effective if the head loss is about

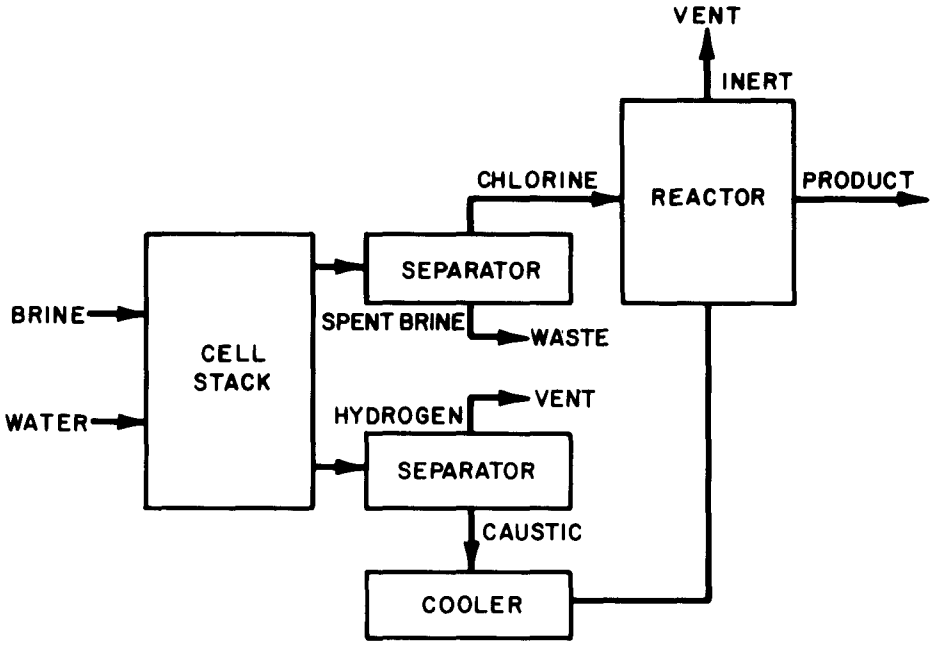

IONICS GENERATION SYSTEM (18)

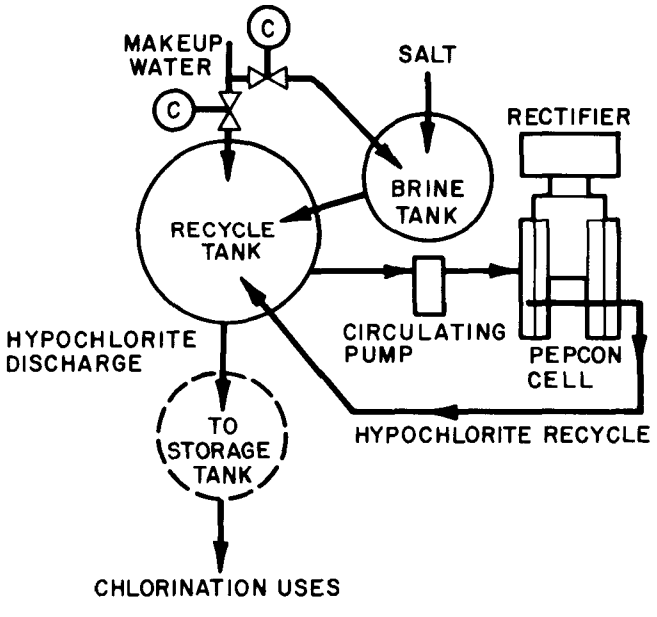

PEPCON GENERATION SYSTEM (19)

FIGURE 15-7

HYPOCHLORITE GENERATION

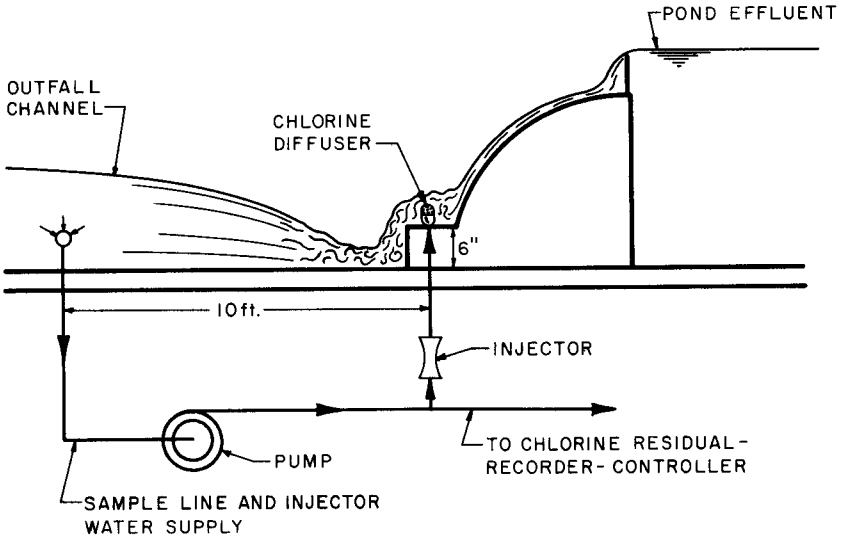

HYDRAULIC JUMP MIXING

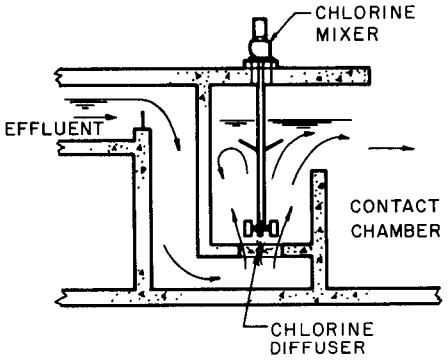

MECHANICAL MIXING

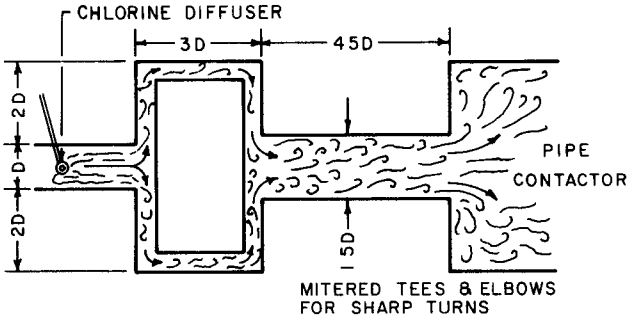

MIXING BY EXPANSION IN PIPE

FIGURE 15-8

CHLORINE MIXING METHODS

2 ft (0.6 m). Another simple, but effective, method to achieve good mixing in small plants is to place the chlorine feed at a centrifugal pump inlet, if the flow to the contactor is pumped.

The design of the chlorine mixing and contacting units must be considered together. The contact unit should be designed to provide a detention time of not less than 30 minutes for each molecule of water passing through. Unless model dye studies have been made to determine the ratio of actual to theoretical detention time, a value of two-thirds may be used. For example, if the actual time is to be 30 minutes, the contact unit should have a theoretical detention time of 45 minutes. The ratio might be as high as 0.9 for an excellent design.

Such plug flow can be obtained to a major degree by 1) using a pipe designed to flow full to provide contact time; 2) using a long, narrow, concrete-lined channel; or 3) placing end-around baffles with guide vanes at turns in the contact chamber. The pipe is the best type of chlorine contact unit for small plants. Length-to-width ratios of 60 to 70 have proven most effective (4). One effective design for baffled contact chambers, as shown in Figure 15-9, has a flow-length to channel-width ratio of 72.

Model tests were made by the Metropolitan Sanitary District of Greater Chicago to evaluate the impact of different baffle designs on actual detention time. The various baffle designs evaluated and the test results are shown in Figure 15-10. The data show that the baffle arrangement used in Scheme IIA, using turning vanes, provided the highest actual contact times.

15.4 Ozonation

Ozone, used to disinfect wastewater or as a tertiary treatment, does not increase the odor, color, or salt content of the plant effluent. In relatively pure potable water, ozone has a half life from about 20 to 80 minutes, depending on the COD remaining in the water (21). At normal temperatures, ozone residuals rapidly disappear if any COD is present. Although it is twice as powerful an oxidizing agent as hypochlorite ion, ozone has relatively little disinfecting power until the initial ozone demand of the wastewater has been satisfied. After this point has been reached, it reacts very rapidly essentially to complete disinfection of both bacterial and viral pathogens within 5 minutes (22). If normal amounts of oxidizable materials are present, as in secondary effluent, the dosage required may be between 5 and 20 mg/l (23). Ozone treatment does not reduce the total dissolved nitrogen. At pH above 10, ammonia also is oxidized to nitrate. CODs of 30 to 50 mg/l can be reduced about 50 to 70 percent with ozone in one to two hours of actual (not theoretical) contact time.

For domestic wastewaters, the relations between feedwater COD, product COD, feedwater pH, reaction time, dissolved ozone concentration, and the quantity of ozone dissolved are discussed in reference (24). An ozone-generating facility must be designed to meet peak flow periods and maximum dosage levels (23). If dechlorination is required, the costs of ozonation may become more competitive with the costs of chlorination, especially if liquid oxygen is available onsite. It takes about 2.5 to 3.5 kWh (9.0 to 12.6 mJ) to produce a pound of ozone, using oxygen feed, and about 6 to 9 kWh (21.6 to 32.4 mJ), using air feed.

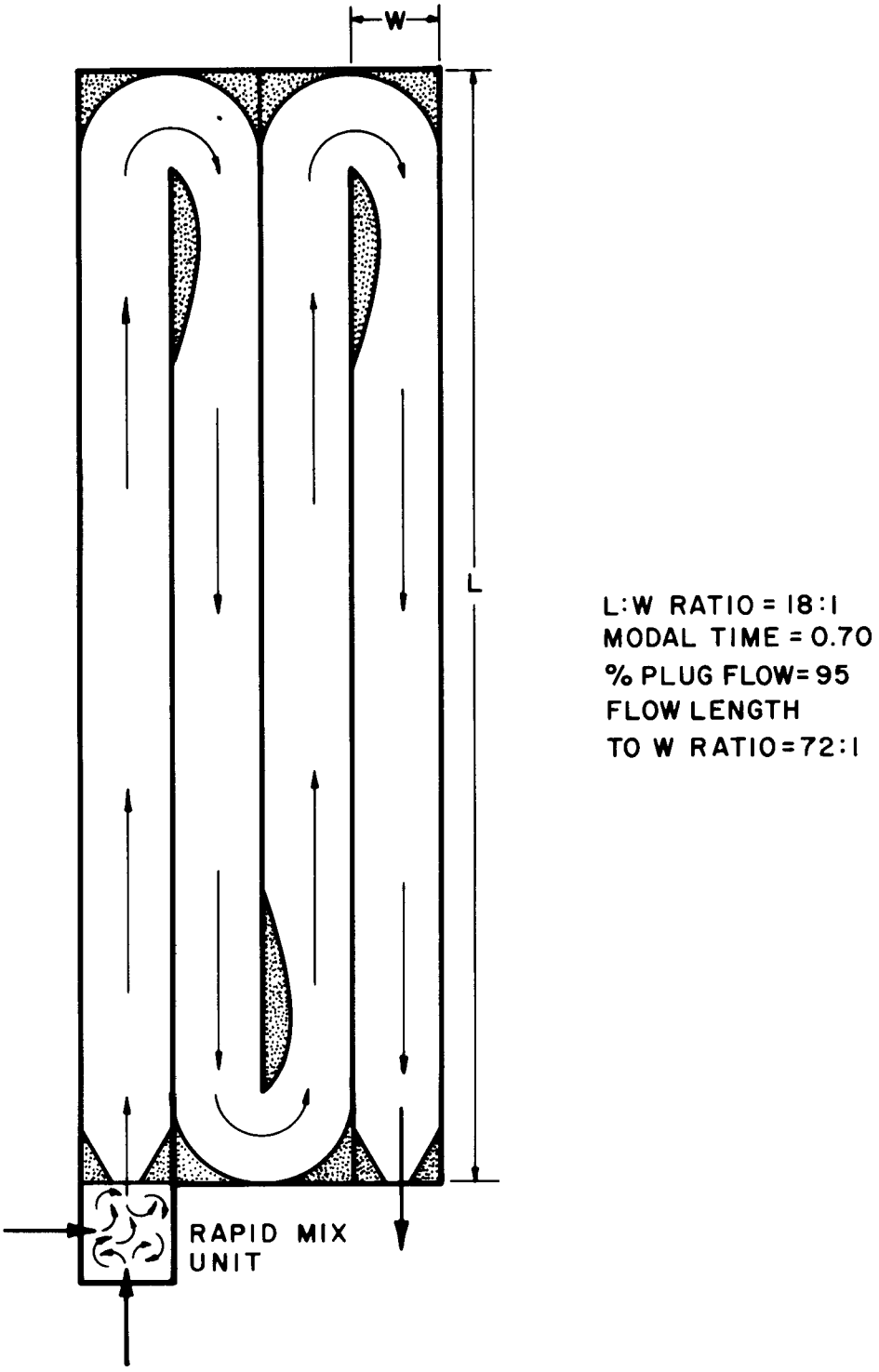

FIGURE 15-9

CONTACT CHAMBER WITH LONGITUDINAL BAFFLING (4)

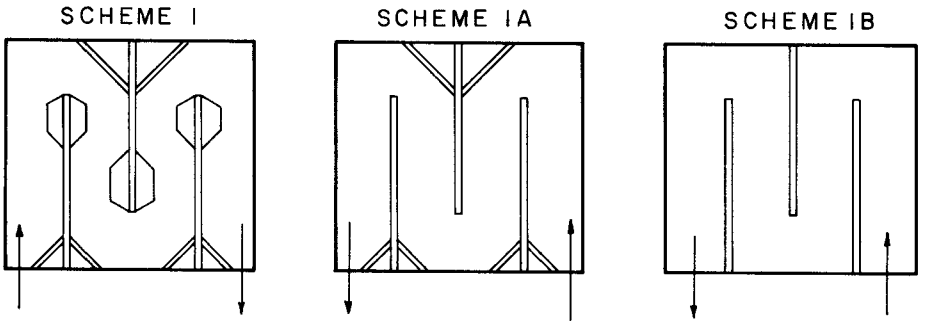

	SCHEME I	SCHEME IA	SCHEME IB
FLOW, MGD	82.5	82.5	82.5
WATER DEPTH, FT.	14.2	14.2	14.2
CONTACT TIME, MIN.			
MINIMUM	21.0	17.6	15.3
MEAN	29.2	26.4	23.9
MAXIMUM	36.5	37.8	34.8

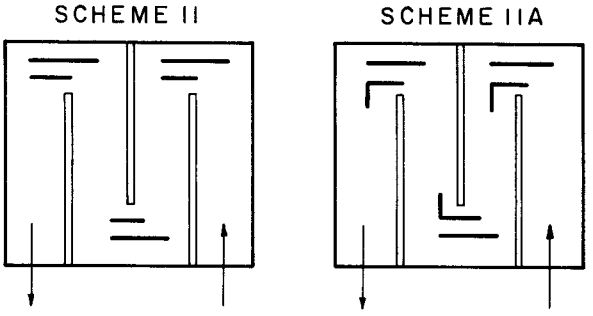

	SCHEME II	SCHEME IIA
FLOW, MGD	82.5	82.5
WATER DEPTH, FT.	14.2	14.2
CONTACT TIME, MIN		
MINIMUM	15.2	25.0
MEAN	20.5	31.1
MAXIMUM	31.9	39.5

FIGURE 15-10

IMPACT OF CHLORINE TANK BAFFLE DESIGN ON ACTUAL DETENTION TIME (6)

The primary objections to ozone use are high cost, possible air pollution from excaping ozone, and high electrical consumption. The advantages of ozone for disinfection for secondary effluents are:

1. It eliminates tastes and odors; reduces oxygen demanding matter; removes most colors, phenolics, and cyanides; reduces turbidity and surfactants; and increases dissolved oxygen.
2. Ozonation can also be used as a tertiary treatment process for oxidation of residual carbon compounds and for odor control
3. The Maximum Allowable Concentration (MAC) of ozone in air, as established by the American Council of Governmental Industrial Hygienists, is 0.1 ppm by volume for continuous human exposure. The threshold odor of ozone is 0.01 to 0.02 ppm. This means that a person working near an ozone-handling area should be able to detect the presence of ozone at concentrations far below the MAC (6).
4. Ozone can be generated from air, making its supply dependent only on a source of power. Production of ozone from oxygen should be considered where onsite generation of oxygen is practiced in conjunction with biological treatment, because less energy is used.

The two most efficient types of ozone generators are the water-cooled tube and the air-cooled, Lowther-plate ozonators (24). The latter are generally more efficient (25). The Lowther-plate ozonator (see Figure 15-11) with a once-through air feed system will require about 6.3 to 8.8 kWh/lb (13.0 to 19.4 kWh/kg), while with a recycled-pure-oxygen feed system, it will require about 2.5 to 3.5 kWh/lb (5.5 to 7.7 kWh/kg). Ozonation systems are shown in Figures 15-11 and 15-12. A typical ozone contactor is also shown in Figure 15-12. There are four general systems to apply ozone to wastewater (28):

1. Cooled and dried air is fed to the ozonator and the resultant air-ozone solution (1.3 percent ozone by weight) is mixed with wastewater in a contactor. This system is limited to very small wastewater systems (because of its inefficiency) and for use in odor control.
2. An oxygen-enriched feed replaces the air feed in system one (above). A pressure-saving separator is used to remove nitrogen.
3. Oxygen feed replaces the air feed in system one, and oxygen-rich offgas is recycled to the front of the loop. Nitrogen is removed from the wastewater before ozonation.
4. Air is enriched to about 40 percent oxygen at starting. In each successive cycle the recycled gas is cleaned, dried, and enriched in oxygen.

Three general types of contactors are usually used. These are the packed bed, the sparged column, and the sparged column with mixing. The most efficient contactor design for a particular wastewater at a particular location is apt to be different from the best for another wastewater with different local conditions. The design of an ozonation system for a municipal wastewater treatment facility requires thorough knowledge of the local conditions and of ozonation to optimize the design.

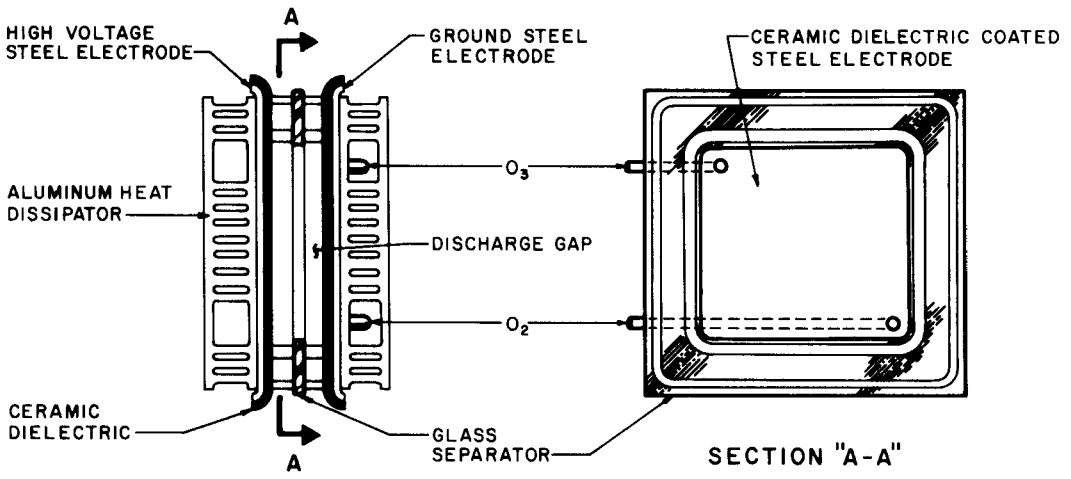

LOWTHER PLATE OZONE GENERATOR UNIT

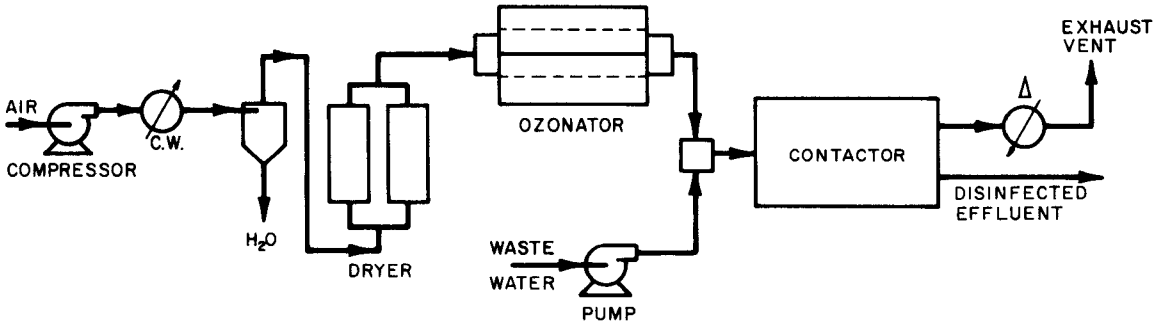

AIR FEED OZONE TREATMENT SYSTEM

FIGURE 15-11

OZONE SYSTEM (26) (27)

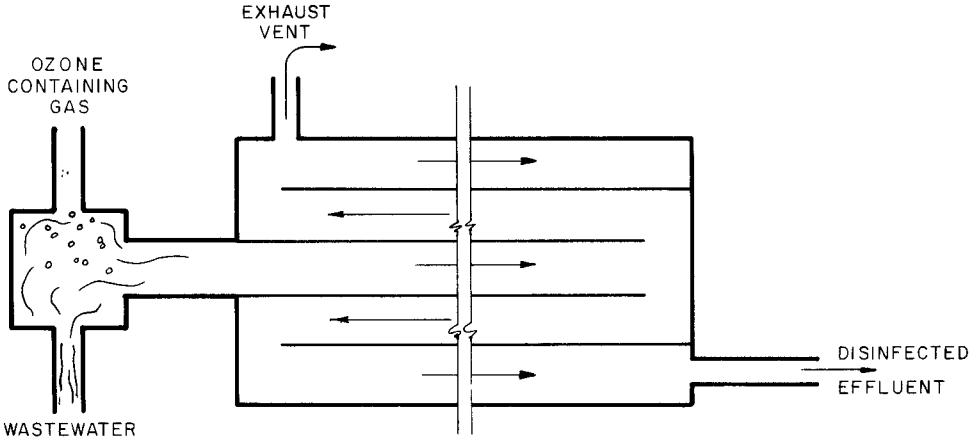

DETAIL OF CONTACTOR

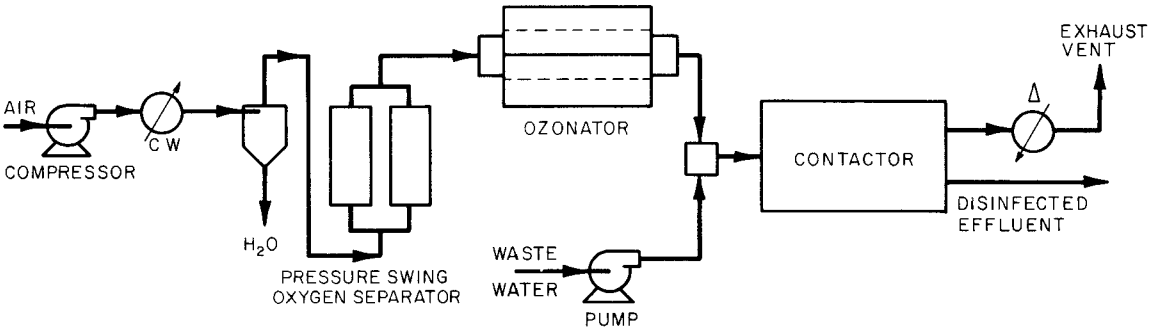

OXYGEN-RICH AIR FEED
OZONE TREATMENT SYSTEM

FIGURE 15-12

OZONE SYSTEM (26) (27)

15.5 Small Plant Disinfection Practice

Current disinfection practice in the design of small wastewater treatment plants is usually confined to chlorination. Its efficiency is a function of the adequacy and rate of mixing, contact time, water temperature, pH, interferring substances present, and quality of plant operation and maintenance.

The steps to take in designing a chlorination system are outlined at the end of section 15.2.

At smaller, more isolated plants, dry sodium hypochlorite is used, with the solution prepared each day or two to prevent loss of effectiveness because of deterioration. The vacuum chlorinator usually is the cost-effective choice in which liquid chlorine can be obtained expeditiously. Standby chlorination facilities are required to meet EPA reliability guidelines. For small plants, a standby dry NaHOC1 feed installation will usually prove to be effective, if an alternative source of liquid chlorine is not available.

To maintain as low a chlorine residual as possible in the plant effluent, while providing enough chlorine to meet the variable chlorine demand, is difficult at small plants if the flows are also quite variable. Preferably the chlorine feed should be paced by signals from a chlorine residual analyzer. If this process is not possible, feed should at least be paced by a flow measuring device.

Mixing of the chlorine in the treated wastewater must be quick and thorough, requiring adequate turbulence. The three types of mixing (shown in Figure 15-8), or feeding the chlorine into a centrifugal pump inlet, are all effective methods for good mixing. The simplest form of efficient contactor is a pipe with a siphon or weir at the lower end to keep the pipe flowing full. An open channel may be substituted for the pipe. Either should have a length-to-width ratio of 50 to 80 and a minimum actual detention time at peak flow of 30 minutes.

Means should be provided for regular sampling to determine the fecal coliform count in the chlorinated effluent, because the chlorine residual is a less accurate indicator of fecal bacteria survival.

15.6 Postaeration

Most State receiving water quality standards require a minimum stream DO of 4.0 mg/1. In addition, States are requiring a minimum DO at least equal to the receiving water quality standards (6).

Postaeration can be accomplished by adding oxygen to the treated effluent before discharge in several ways: mechanical aeration, diffused aeration, cascade aeration, U-tube aeration, and ozonation (used if present for other purposes).

Although postaeration in chlorine contactors does not affect chlorine residual, it does increase short circuiting and, thus, may reduce the effectiveness of the chlorination.

Postaeration will increase the dissolved oxygen in treatment plant effluent, thus reducing ultimate oxygen demand and potential odor problems in the stream.

Secondary effluents from biological treatment plants normally contain 0.5 to 2.0 mg/l of DO (6). Saturated DO concentrations in plant effluents will normally be between 8 and 14 mg/l. An unsatisfactory BOD of 35 mg/l with 0.5 mg/l of DO could be reduced to below 30 mg/l, by adding 6 mg/l of DO with postaeration, thereby meeting secondary effluent requirements.

Typical devices used in postaeration are shown in Figure 15-13 (6). These devices and design considerations for their use in postaeration are described in the *Process Design Manual for Upgrading Wastewater Treatment Plants* (6).

The two postaeration methods found to be most simple and yet effective for small treatment plants are cascade aeration and U-tube aeration, neither of which incorporate mechanical equipment nor require outside power (other than some loss of head). If compressed air is available at the plant, diffused aeration may be used advantageously for postaeration. Otherwise, the more efficient mechanical aerator should be used if postaeration is necessary and if sufficient head is not available for U-tube aeration or cascade aeration.

15.7 References

1. Metcalf and Eddy, *Wastewater Engineering.* New York: McGraw-Hill (1972).

2. Chambers, C.W., "Chlorination for Control of Bacteria and Viruses in Treatment Plant Effluents," *Journal Water Pollution Control Federation* (February 1971).

3. "Viruses in Water." AWWA Committee on Viruses, *Journal American Water Works Association* (October 1969).

4. White, G.C., "Disinfecting Wastewater with Chlorination /Dechlorination." *Water and Sewage Works* (August, September, and October 1974).

5. Culp, R.L., "Breakpoint Chlorinations for Virus Disinfection." *Journal American Water Works Association* (December 1974).

6. *Process Design Manual for Upgrading Existing Wastewater Treatment Plants.* U.S. EPA, Office of Technology Transfer (October 1974).

7. McFarren, E., private communication, U.S. EPA, Cincinnati (September 1974).

8. Lin, S., Hullinger, D.L., and Evans, R.L., "Selection of a Method to Determine Residual Chlorine in Sewage Effluents," *Water and Sewage Works*, Vol. 118, 360 (November 1971).

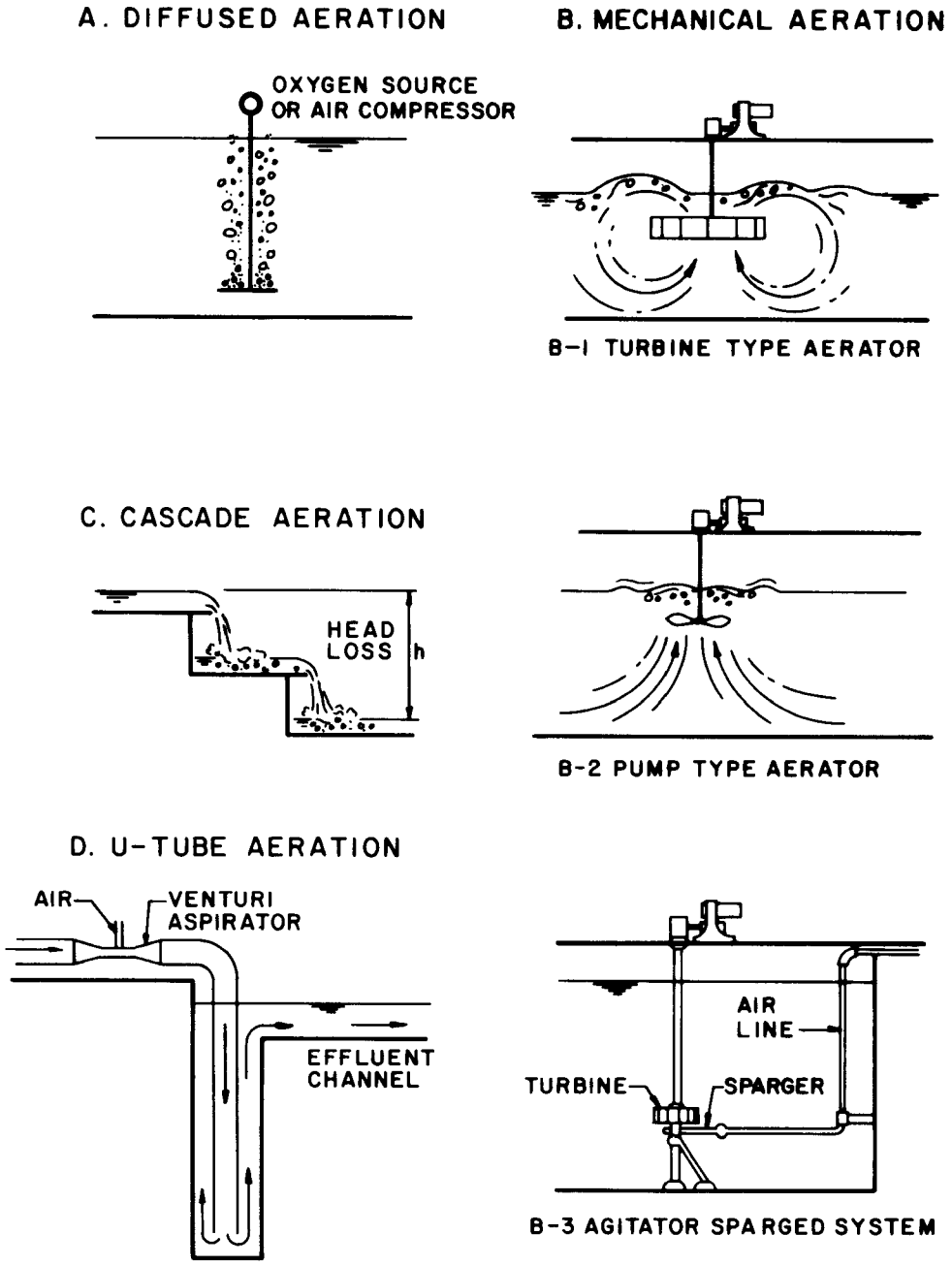

FIGURE 15-13

TYPICAL POSTAERATION DEVICES

9. *Standard Methods.* APHA, AWWA, WPCF (1972).

10. Browning, G.E. and McLaren, F.R., "Experiences with Wastewater Disinfection in California."*Journal Water Pollution Control Federation,* 39, P 1351 (August 1967).

11. Fair, G.M., Geyer, J.C. and Okun, D.A., *Water and Wastewater Engineering.* New York: John Wiley & Sons (1968).

12. White, G.C., *Handbook of Chlorination.* New York: Van Nostrand Reinhold (1972).

13. Majumdar, S.B., Ceckler, W.H., and Sproul, O.J., "Inactivation of Poliovirus in Water by Ozonation." *Journal Water Pollution Control Federation* (December 1973).

14. Collins, H.F., and Deaner, D.G., "Sewage Chlorination Versus Toxicity-A Dilemma?" *Journal Environmental Engineering Division,* ASCE (December 1973).

15. Bauer, R.C. and Snoeyink, V.L., "Reactions of Chloramines with Active Carbon." *Journal Water Pollution Control Federation* (November 1973).

16. Culp, G.L. and Culp, R.L., *New Concepts in Water Purification.* New York: Van Nostrand Reinhold (1974).

17. Connell, G.F. and Fetch, J.J. "Advances in Handling Gas Chlorine," *Journal Water Pollution Control Federation,* p. 1,505 (August 1969).

18. *Cloromat.* Ionics, brochure.

19. *Pep-Chlor Systems.* Pacific Engineering and Production Co. of Nevada, brochure.

20. Silvey, J.K.G., Abshire, R.L., and Nanez, W.J., II, "Bacteriology of Chlorinated and Unchlorinated Wastewater Effluents." *Journal Water Pollution Control Federation,* Vol. 46, no. 9 (September 1974).

21. Winn, C.S., Kirk, B.S., and McNabney, R., *Pilot Plant for Tertiary Treatment of Wastewater with Ozone.* U.S. EPA, Office of Research and Monitoring, EPA-R2-73-146 (January 1973).

22. Echelberger, W.F., Pavoni, J.L., Singer, P.C., and Tenney, M.W., "Disinfection of Algal Laden Waters."*Journal Sanitary Engineering Division,* ASCE (October 1971).

23. Nebel, Carl, et al, "Ozone Disinfection of Industrial-Municipal Secondary Effluents." *Journal Water Pollution Control Federation* (December 1973).

24. McCarthy, J.J. and Smith, C.H., "A Review of Ozone and Its Application to Domestic Wastewater Treatment." *Journal American Water Works Association* (December 1974).

25. Rosen, H.M., "Ozone Generation and Its Economical Application in Wastewater Treatment." *Water and Sewage Works* (September 1974).

26. Rosen, H.M., Lowther, F.E., and Clark, R.G., "Get Ready for Ozone." *Water and Wastes Engineering* (July 1974).

27. Rosen, H.M., "Use of Ozone and Oxygen in Advanced Wastewater Treatment." *Journal Water Pollution Control Federation* (December 1973).

CHAPTER 16

OPERATION AND MAINTENANCE

Studies of wastewater treatment facilities have shown that any inadequacy in the design, staff, organization, or operation and maintenance (O&M) has invariably led to a waste of capital, manpower, and energy. Wise use of personnel according to a well-organized O&M program can conserve these three essential resources and can result in optimum treatment efficiency at a minimum total cost.

It is the responsibility of the design engineer of small plants to select processes and equipment that will reduce the amount and the complexity of O&M procedures. Treatment processes selected should minimize operator time and make laboratory testing consistent with producing the required effluent quality. There is no point in including instrumentation or equipment that will not be kept functioning. In fact, the small plant should be designed to be as maintenance free as possible.

Because of perpetually tight budgets and minimal staffing arrangements, newly demonstrated processes or equipment should be selected only if reliability has been shown and a warranty of performance is stipulated. The design engineer should be sure that adequate backup service and ready sources of spare parts for the equipment selected will be available for the estimated service life of the equipment. The use of tried and proved equipment should reduce the annual maintenance and repair bill and improve overall plant operation.

Federal Guidelines on the Operation and Maintenance of Wastewater Treatment Facilities (1) contains sections on government inspections, staffing, training, records, laboratory and process control, safety, emergency operations, maintenance, O&M manuals, and financial controls. The design engineers should carefully consider these guidelines in any operation or maintenance planning.

The design engineer should, as a minimum, provide a small plant with sufficient capabilities to:

1. Meet reliably effluent standards with minimum plant supervision.
2. Allow necessary alternative process adjustments to handle shock (or widely varying) hydraulic, organic, or toxic loadings.
3. Safely divert the flow around malfunctioning units, while providing the minimum necessary levels of treatment.
4. Secure the necessary assistance in times of emergency and quickly put back on-line malfunctioning equipment or processes, such as chlorination or aeration.
5. Keep the facilities clean, neat, and odor free with a minimum expenditure of time.
6. Perform necessary preventive maintenance.
7. Allow performance of necessary analytical measurements for process control and routine monitoring.

16.1 Management and Organization

Management planning is required on the State, regional metropolitan, and local levels to supervise, monitor, assist, and/or control the operation and maintenance of small wastewater treatment works.

Management must provide: 1) personnel at the required level of education and/or training for each required task: 2) equipment in functioning condition necessary to carry out the work; 3) required O&M funds; 4) enforcement of sewer ordinances and pretreatment requirements; and 5) coordination of these activities. Management must select competent engineers and contractors to design and build the works and provide reviews and approvals at each stage of their progress.

Operators of smaller wastewater treatment works usually require management assistance for preparing and implementing an adequate organization plan. This organization plan should insure an economy of effort, funds and manpower, while providing necessary manpower backup services. Backup support services should include: 1) specialized electrical and mechanical maintenance and repair; 2) needed advanced analytical laboratory services; and 3) consultation on process control. The most efficient management organization will vary according to the location, size, and type of treatment works. Some States, such as Massachusetts and Vermont, stipulate the number and function of personnel for different sizes and types of treatment plants.

Support, first and last, is a management problem rather than a technical one. The manager, probably working under a board of directors, must supervise the technical and clerical personnel who actually carry out the policies and procedures that have been established. To do this, the manager must understand the jobs they do and insure that all the pieces – policies, procedures, personnel, and costs – fit together (2).

The way the wastewater system is viewed by management is also important. The system should be administered as a business venture with ongoing responsibilities and opportunities, rather than as a one-time achievement that moves in an unchanging manner once established.

Although the full-time presence of personnel at smaller wastewater treatment plants is not always necessary, daily visits to check plant operation, monitor performance, and perform required maintenance must be made. In locations in which small wastewater treatment plants are relatively close, one person usually can visit two or more plants each day to perform the necessary tasks and collect samples. For safety, a one-person crew should check into an office by phone on arrival and on departure from each plant. Two-person crews are necessary for the periodic maintenance that would be unsafe for a single person. In this situation, several one-person operations can be combined into a regional or metropolitan arrangement for provision of backup needs. The Oakland County, Michigan, Public Works Department provides operation services for about 33 smaller treatment plants. The county is divided into five districts, and each plant is visited at least once each day by one or more of the 16-person operating staff (3). The plants in the county have been meeting required phosphorus removal as well as secondary treatment effluent standards (3).

Backup services in this arrangement include: 1) advice and assistance in process control and O&M; 2) specialized maintenance and repair of electrical and mechanical equipment; 3) routine and specialized analyses of wastewater samples; 4) procurement of supplies; and 5) financial administration. The Metropolitan Sewer District of Greater Cincinnati, Ohio, performs a similar service in the operation of small wastewater treatment plants in the district (3) (4).

Some sparsely inhabited states are divided into districts to provide these backup services to local operators and to monitor performance (5). Because of substantial distances between plants, these backup services can often be provided at only one or two plants per day. The backup operation, maintenance, laboratory services, and monitoring may be supplied by contractual agreements with private organizations, if such an agreement would be more economical and efficient than municipal staffing. Organizations that might provide one or more of the backup services include consulting engineers, commercial laboratories, universities, and other government facilities.

Communication between the operating personnel and the design engineer, both before the plant is designed and after it is in operation, is essential to effective plant operation.

To provide the basis for manpower planning, task factors or work elements (with their corresponding personnel requirements) must be developed. Manpower planning, with district, region, or State management for backup services for small wastewater treatment plants, must be coordinated with present and future work space designs. Such planning must include:

1. Identification of personnel capabilities
2. Identification of optimal operation tasks
3. Preparation of manpower specifications
4. Identification of training requirements
5. Development of task performance aids
6. Development of work performance evaluation criteria
7. Development of career development patterns

16.2 Factors Affecting Operation

All possible factors affecting efficient and satisfactory operation must be considered by management when manpower and organization plans are developed (6). Table 16-1 lists some of these factors and indicates which treatment processes might be affected by each. Most small secondary wastewater treatment plants are absolutely dependent on the functioning of an active population of microorganisms to meet effluent standards. The design engineer should consider a means of obtaining an inoculum of active microbes for quick startup of biological units initially or after unexpected shutdowns, particularly for nitrification systems.

Each treatment facility, particularly advanced wastewater treatment plants, may have difficulties not included in Table 16-1. Sludge and process sidestream problems are discussed

TABLE 16-1

COMMON FACTORS AFFECTING OPERATIONS

Design and Operational Factors Affecting Effluent Quality or the Environment	Wet Wells & Pumping	Equalization Tanks	Primary Clarifier	Final Clarifier	Activated Sludge	Trickling Filters	Sand Filters	Granular Media Filters	Oxidation Ditches	Aerated Ponds	Stabilization Ponds	Disinfection
Wrong Detention Time	X	X	X	X	X				X	X	X	X
Wrong Depth			X	X		X	X	X		X	X	
Wrong Width to Length			X	X					X	X	X	X
Wrong Area			X	X				X			X	
Inadequate Inlet Design			X	X	X		X	X		X	X	
Inadequate Outlet Design			X	X	X	X	X	X		X	X	
Inadequate Mixing		X			X				X	X	X	X
Short Circuiting		X	X	X	X					X	X	X
Wrong Sized Pumps	X	X	X	X	X	X		X				
Wrong Sized Compressors		X			X			X		X		
Inadequate Pretreatment	X	X	X	X	X	X			X	X	X	X
Shock Hydraulic Loads			X	X	X	X		X		X		X
Shock Organic Loads					X	X			X	X	X	X
Excessive Alkalinity (High pH)					X	X	X		X	X	X	X
Excessive acidity (Low pH)	X	X	X	X	X	X	X	X	X	X	X	
Low Temperature			X	X	X	X	X	X	X	X	X	X
Wrong BOD Loading				X	X	X	X	X	X	X	X	
Wrong MLVSS Loading				X	X				X			
Wrong SVI				X	X				X			
Wrong SRT				X	X				X			
Septic Wastewater	X	X	X	X	X	X	X	X	X	X	X	
Septic Sludge	X	X	X	X	X					X	X	
Scum	X	X	X	X	X				X	X	X	
Foam	X	X	X	X	X				X	X	X	
Inadequate Oxygen Supply		X			X	X			X	X	X	
Malfunctioning Aerators		X			X				X	X		
Malfunctioning Diffusers		X			X				X	X		
Malfunctioning Pumps	X	X	X	X	X	X		X	X	X		
Malfunctioning Compressors		X			X							
Dentrification of Sludge				X	X							

Design and Operational Factors Affecting Effluent Quality or the Environment	Wet Wells & Pumping	Equalization Tanks	Primary Clarifier	Final Clarifier	Activated Sludge	Trickling Filters	Sand Filters	Granular Media Filters	Oxidation Ditches	Aerated Ponds	Stabilization Ponds	Disinfection
Inadequate Monitoring		X	X	X	X	X	X	X	X	X	X	X
Clogging of Pipes and Valves		X	X	X	X	X	X	X	X	X	X	
Excessive Grit	X	X	X		X	X			X	X	X	
Excessive Variation in Flow	X		X	X	X	X	X	X	X	X		X
Excessive Variation in BOD					X	X			X	X		
Inadequate Recirculation					X	X			X	X	X	
Inadequate Backwashing								X				
Inadequate Cleaning	X	X	X	X	X	X	X	X	X	X	X	X
Inadequate Flow Control	X	X	X	X	X	X	X	X	X	X	X	X
Inadequate Inspection	X	X	X	X	X	X	X	X	X	X	X	X
Inadequate Preventative Maintenance	X	X	X	X	X	X	X	X	X	X	X	X
Sludge Bulking				X								

in Chapter 14. Other chapters contain descriptions of special problems that might be encountered in specific processes.

16.3 Personnel

The following observations were noted by Iowa State University in a report on conventional wastewater treatment plants smaller than 1 mgd (7):

> Unless local authorities are motivated to provide adequate manpower and funds for proper operation of treatment plants, regardless of where the initial funding originates, the plant is not going to be operated effectively. This includes providing adequate man-hours, operating supplies, equipment, wages, and related support. Operators in the small plant may be strictly part-time with this responsibility shared with street repair, park mowing, solid waste problems, and law enforcement. A particular problem at small plants is that the part-time wastewater treatment plant operators are often assigned other duties in the community that have been given higher priorities than the treatment plant operation.
>
> Operation of small treatment plants is greatly affected by the motivation and training of the individual operator. This training must include basic knowledge of unit processes and the plant equipment, how to recognize potential trouble, how to diagnose and make temporary repairs, and where to obtain additional assistance. Thus, the training

> must encompass what each process is and does, how to control it, when to take corrective action, and where to obtain competent aid in time of stress . . . .

Average man-hour requirements for the basic operation of secondary treatment plants, other than stabilization ponds, are shown on Figure 16-1. The limit curves are based primarily on data presented in reference (7), which indicate that a minimum of 3 hours per day are required for operating and maintaining package plants. However, most permanent plants will require at least several hours per day. A typical weekly O&M schedule for an extended aeration treatment plant is shown in Table 16-2.

A manpower plan must provide for: 1) standby personnel for all types of emergencies and repairs to essential equipment; 2) laboratory facilities and personnel for special analyses: and 3) electrical and mechanical workshops where repairs can be made for each type of equipment. Equipment and processes for small wastewater treatment facilities should be designed for a work shift of 8 hours a day. A three-shift operation requires a minimum of five operators, which represents a cost of about $150 to $200 per million gallons for a 1-mgd (3,785 m^3/d) plant.

More complete listings of tasks to be accomplished by different personnel at various types of treatment facilities are presented in references (8) and (9).

Training schools and special sources should be available to all operators and mechanics. Technical and professional schools offer specialized courses for technicians. Onsite training at the time of plant startup should be provided by equipment manufacturers' representatives and design engineers. If the operator is to work part-time with other regular assignments, on-the-job training is still required to insure that the operator's training is adequate. Correctional training should be provided onsite by regional or state supervisory, control, or backup personnel. Criteria for the establishment of training are available (10) (11).

Programs for either voluntary or mandatory certification of operators exist in most states. The certificate is indicative of the knowledge, experience, and competency of the operator. Certification programs give the operator improved status, greater flexibility in changing jobs, and opportunity for higher wages. Certification usually provides benefits to the municipal employer by increased efficiency in plant operation and maintenance, more reliable reports and records, and more confidence in the operator's recommendations for repairs and improvements. A typical certification program is described in reference (12).

Table 16-3 is a list of some nationally recognized schools and training programs for wastewater treatment plant operators. The proceedings of a national conference on educational systems for such operators at Clemson University contain thorough analyses of training problems (13).

Initial and annual budgets must provide adequate funds for training. It must be assumed that most people wish to advance, as they mature, to higher pay levels and added responsibilities. The budget must take into consideration the training of replacements as a regular occurrence.

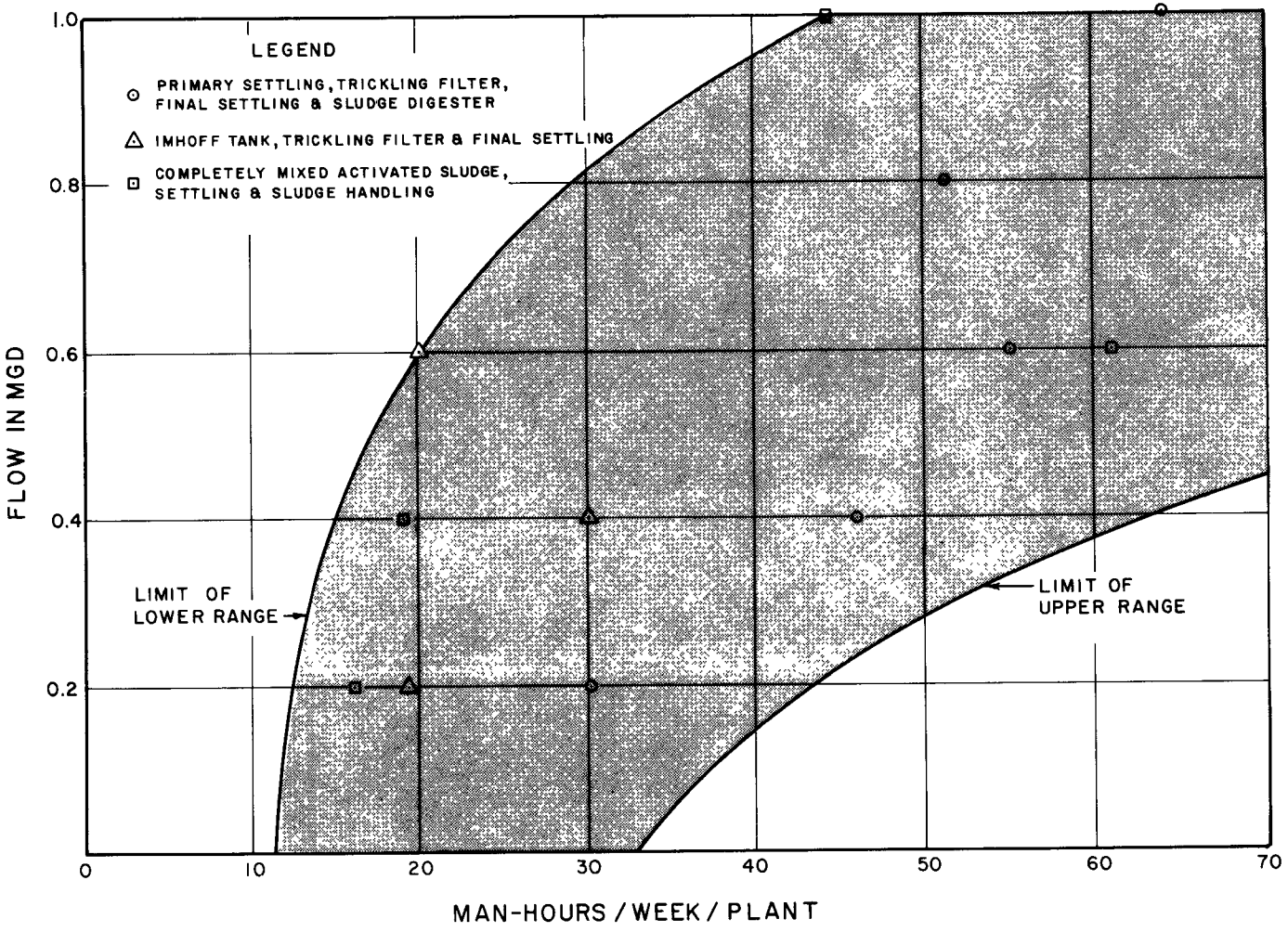

FIGURE 16-1

AVERAGE OPERATION TIME

TABLE 16-2

TYPICAL EMPLOYEE PREFORMANCE MATRIX FOR EXTENDED AERATION ACTIVATED SLUDGE PLANT (2)

Task	Skill	Time hr	Weekly Average hr
INITIAL OVERALL INSPECTION			
a. Quick Visual Inspection	Operator II (Most Skilled)	0.08/Day	0.56
b. Check Maintenance Schedule	Operator II	0.08/2 Days	0.30
c. Record Maintenance Jobs	Operator I (Intermediate Skill)	0.25/Week	0.25
CHECK AND MAINTAIN EQUIPMENT AND TANKS			
a. Maintain Inlet Area			
Hand Cleaning of Screens	Helper (Least Skilled)	0.75/week	0.75
Removal/Disposal of Debris	Helper	0.50/Week	0.50
Comminutor Cleaning	Operator I	0.50/Week	0.50
Comminutor Maintenance	Operator II	0.12/Week	0.12
Clean Inlet Area	Helper	0.08/Day	0.56
b. Maintain Blower Equipment			
Check Blower and Equipment	Operator I	0.04/Day	0.28
Clean Filter	Operator I	0.50/4 Weeks	0.12
Blower and Pump Maintenance (Oil Change)	Operator II	0.50/8 Weeks	0.06
c. Clean Aeration Tank			
Check, Scrape and Hose Down Aeration Tank	Helper	0.30/Week	0.50
d. Maintain Air and Return Equipment			
Inspect Equipment	Operator II	0.08/Day	0.56
Clean Air Diffusers	Helper	0.50/2 Weeks	0.25
Operate Foam Equipment	Operator I	0.25/2 Weeks	0.13
Clean Foam Equipment	Helper	0.50/4 Weeks	0.12
Adjust Sludge Return	Operator II	0.16/3 Days	0.38
Clean Sludge Return	Helper	2.00/4 Weeks	0.50
Operate Skimmer Return	Operator I	0.16/Week	0.16
Clean Skimmer Return	Helper	0.50/4 Weeks	0.12

Task	Skill	Time hr	Weekly Average hr
CHECK AND MAINTAIN EQUIPMENT AND TANKS (Continued)			
e. Clean Clarifier			
Clean Sidewalls, Weirs, and Still Box	Helper	0.25/Day	1.75
Scrape Clarifier Hopper	Helper	0.16/Day	1.12
f. Sludge Removal			
Sludge Wasting	Operator II	1.00/Week	1.00
Disposal of Sludge	Opearator I	2.00/Week	2.00
Clean Sludge System	Helper	0.50/Week	0.50
g. Chlorinator Maintenance			
Inspect and Adjust Chlorinator	Operator II	0.08/Day	0.56
Clean Chlorinator and Feed Line	Operator I	0.50/2 Weeks	0.25
Refill Chlorinator System	Operator I	0.50/2 Weeks	0.25
h. Other			
Clean Decks, Weirs, and Troughs	Helper	0.50/Day	3.50
Clean and Store Maintenance Equipment	Helper	0.50/Day	3.50
PERFORM TESTS AND MAINTAIN OPERATIONAL LOG			
a. Influent Characteristics	Operator I	0.02/Day	0.14
b. Aeration Characteristics	Operator II	0.08/Day	0.56
c. Clarifier Characteristics	Operator II	0.02/Day	0.14
d. Effluent Characteristics	Operator I	0.02/Day	0.14
e. 30-Minute Settleability Test	Operator II	0.16/Day	1.12
f. DO Test	Operator II	0.16/Day	1.12
g. pH Test	Operator I	0.08/Day	0.56
h. Chlorine Residual Test	Opearator I	0.08/Day	0.56
i. BOD_5 Test	Operator II	0.40/Week	0.40
j. Suspended Solids Test	Operator II	1.00/Week	1.00
k. Daily Flow	Operator I	0.08/Day	0.56
l. Other Recordings	Operator I	0.16/Day	1.12
m. Maintain Books and Test Site (Room), Other Test Preparation	Operator II	0.50/Day	3.50
MAKE OPERATIONAL ADJUSTMENTS			
a. Remedial Measures – Other	Operator II	1.00/Week	1.00

Task	Skill	Time hr	Weekly Average hr
FINAL AND PERIODIC OPERATION			
a. Maintain Control System	Operator II	1.00/Month	0.25
b. Clean Up Plant Site	Helper	4.00/Week	4.00
c. Outside Contancts and Other Maintenance	Operator II	0.16/Day	1.12
TOTALS			
	Helper	17.67 hr/Week	
	Operator I	7.01 hr/Week	
	Operator II	13.75 hr/Week	
		38.43 hr/Week	

TABLE 16-3

PARTIAL LISTING OF
SCHOOLS AND TRAINING PROGRAMS FOR PLANT OPERATORS

1. Charles County Community College, Maryland – 2-year Associate's Degree and several specialized short courses.
   Contact: Director
   Pollution Abatement Technology Department
   Charles County Community College
   Box 910
   LaPlata, Maryland 20646
   Telephone - (301) 934-2251

2. Southern Maine Vocational Technical Institute, Maine – 9-month specialized wastewater operation and several short courses and mobile training unit.
   Contact: Chairman
   Wastewater Technology Department
   Southern Maine Vocational Technical Institute
   One Vocational Drive
   South Portland, Maine 04106
   Telephone - (207) 799-7303

3. Syracuse University, New York – several 2-week short courses on specialized wastewater topics.

   Contact: Civil Engineering Dept.
   Hinds Hall
   Syracuse University
   Syracuse, New York 13210
   Telephone - (315) 432-2311

   or

   Environmental Manpower Div.
   NYS Dept. of Environmental Conservation
   50 Wolfe Road
   Albany, New York, 12201
   Telephone - (518) 457-6610

4. Lowell Technological Institute, Massachusets – several courses of varying length – both day and evening classes available.

   Contact: Division of Water Pollution Control
   Training Section
   Lowell Technological Institute
   Lowell, Massachusetts 01854
   Telephone - (617) 459-7193

5. State University of California – correspondence course on basic wastewater operation.

   Contact: Dept. of Civil Engineering
   State University of California at Sacramento
   Sacramento, California 59819
   Telephone - (916) 454-6982

6. Water & Sewerage Technical School, Missouri – several wastewater treatment plant operator's courses for different types of wastewater treatment.

   Contact: Water & Sewerage Technical School
   Box 348
   Neosho, Missouri 64850
   Telephone - (417) 451-2786

7. Clemson University, South Carolina – correspondence course manual for wastewater plant operators and individual courses for different grades.

   Contact: Clemson University
   Clemson, South Carolina 29631
   Telephone - (803) 656-3311

8. University of Colorado, Colorado – Fundamentals (of Treatment) course, instructor's papers.

   Contact: Water and Wastewater Plant Operator's School
   University of Colorado
   Boulder, Colorado 80302

Training should be limited to those operations or tasks that will be expected of the trainee within a short time. Otherwise, trainees should be given refresher training before being entrusted with an unfamiliar task. Recent trainees should be frequently checked, because most of them will need some help to adapt techniques to unfamiliar conditions, until they have had several months on the task.

16.4 Operation and Maintenance (O&M) Manuals

Title II of PL 92-500 authorizes the award of construction grants for wastewater treatment works. One additional provision, stipulated in the *Federal Register* of 11 February 1974, is that:

> (a) The grantee must make adequate provisions satisfactory to the Regional Administrator for assuring economic, effective, and efficient operation and maintenance of such works in accordance with a plan of operation approved by the State water pollution control agency or, as appropriate, the interstate agency, after construction thereof.
>
> (b) As a minimum, such plan shall include provision for: 1) an operation and maintenance manual for each facility, 2) an emergency operating and response program, 3) properly trained management, operation and maintenance personnel, 4) adequate budget for operation and maintenance, 5) operational reports, and 6) provisions for laboratory testing adequate to determine influent and effluent characteristics and removal efficiencies.
>
> (c) The Regional Administrator shall not pay 1) more than 50 percent of the Federal share of any Step 3 (construction) project unless the grantee has furnished a draft of the operation and maintenance manual for review, or adequate evidence of timely development of such a draft, or 2) more than 90 percent of the Federal share unless the grantee has furnished a satisfactory final operation and maintenance manual.

The U.S. EPA has prepared guidelines and other criteria for the preparation of O&M manuals (14) (15) (16). Within these criteria, an O&M manual must be prepared to meet the unique requirements of each specific plant as defined by the qualifications of the personnel, the complexity of the equipment, and the amount of work that can be done inhouse by plant staff.

O&M manuals should be as brief as possible, with well-illustrated, step-by-step descriptions of: 1) the normal and emergency operation of each process system and subsystem, and 2) regular maintenance and possible emergency operation and repair procedures. The preparation of good O&M manuals requires the input of persons knowledgeable in: the probable capability of operators; the design and operation of the specific plant; process control; available backup services (i.e., replacement parts, repair shops, and backup laboratories); training procedures; plant startup; state and federal requirements; sampling and analytical procedures; mechanical and electrical maintenance; safety procedures; and record keeping.

Diagrams, charts, tables, and pictures should be used to a maximum. Schematic flow diagrams and isometric drawings should be used in describing systems and subsystems. Typical drawings that may be used are represented in Figures 16-2, 16-3, and 16-4. Often these drawings may be taken directly from construction drawings.

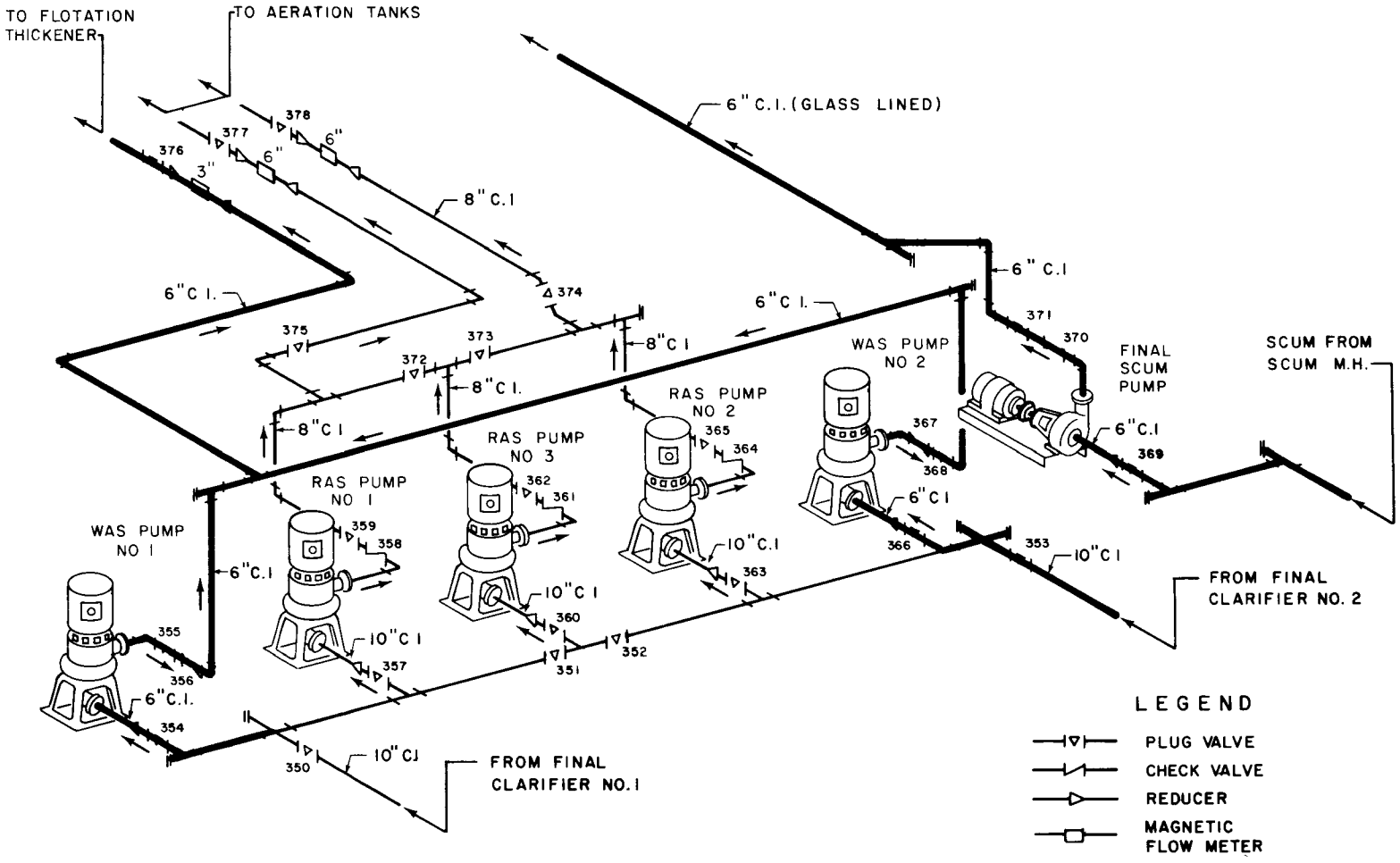

FIGURE 16-2

SECONDARY SLUDGE AND SCUM PIPING SYSTEM
(NORMAL WASH AND SCUM PUMP OPERATIONS)

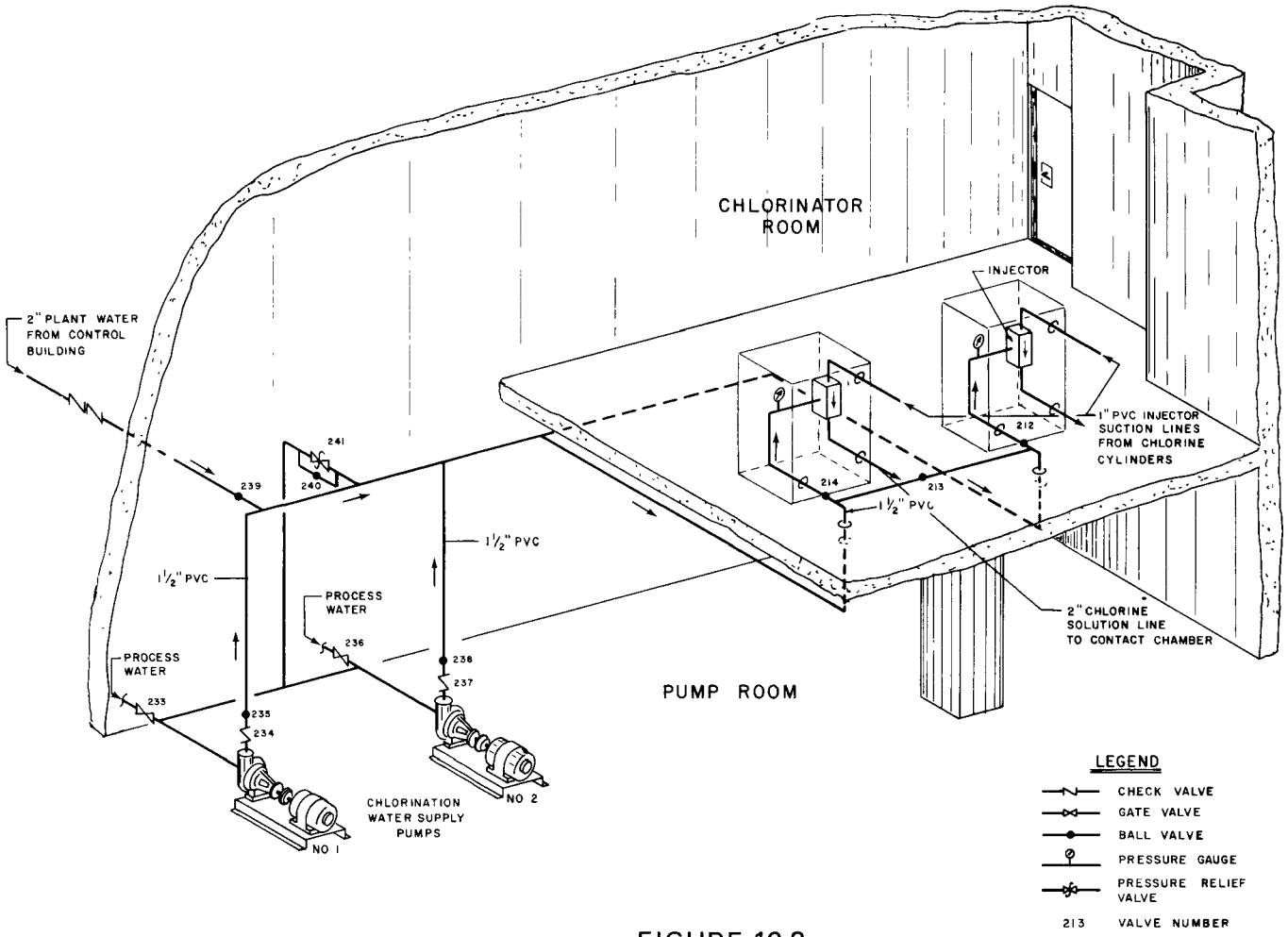

FIGURE 16-3

INJECTOR WATER SYSTEM

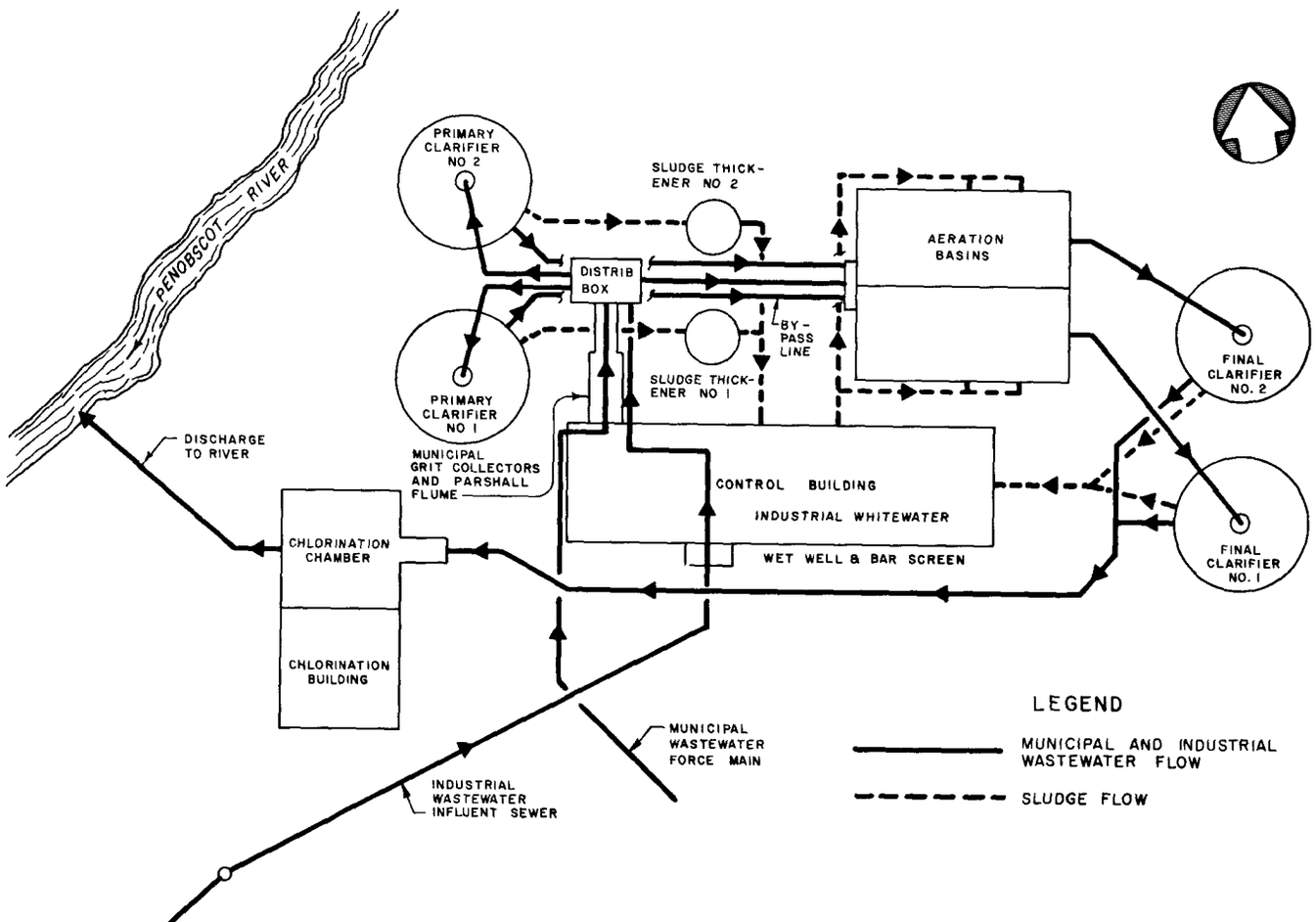

FIGURE 16-4

PROCESS FLOW PATH

A reference library should accompany the O&M manual. Suggested reference books are listed in Table 16-4. These would vary, depending on specific processes and treatment systems employed. The manufactuers' manuals should be assembled by systems; i.e., chlorination, sludge and scum, aeration, chemical feeds, electrical, etc., bound in separate volumes, labeled, page numbered, and indexed for easy reference. The author of the O&M manual can then reference specific pages in the reference books or manufacturers' manuals, rather than prepare detailed descriptions for insertion in the O&M manual.

TABLE 16-4

POSSIBLE REFERENCES FOR AN OPERATOR'S LIBRARY[1]

1. *Standard Methods for the Examination of Water and Wastewater,* APHA-AWWA-WPCF (1971).

2. *Water.* Annual ASTM standards, part 31 (1974).

3. *Manual of Methods for Chemical Analysis of Water and Wastes.* U.S. EPA, Office of Technology Transfer (1974).

4. *Manual of Instruction for Sewage Treatment Plant Operation.* New York State Department of Health, Health Education Service (Albany, N.Y.)

5. *Manual of Wastewater Operations;* The Texas Water Utility Assoc., Texas State Department of Health, Austin, Tex. (1971).

6. *Operation of Wastewater Treatment Plants.* Sacramento State College California WPCA, and U.S. EPA, Office of Water Programs (1970).

7. *Correspondence Course Manual for Wastewater Plant Operators.* Columbia, S.C. (1969).

8. "Safety in Wastewater Works." WPCF *Manual of Practice No. 1.* Washington D.C. (1969).

9. "Chlorination of Sewage and Industrial Wastes." WPCF *Manual of Practice No. 4* (1951).

10. "Aeration in Wastewater Treatment." WPCF *Manual of Practice No. 5* (1971).

11. "Sewer Maintenance." *WPCF Manual of Practice No. 7* (1966).

12. "Uniform System of Accounts for Wastewater Utilities." *WPCF Manual of Practice No. 10* (1961).

13. "Operation of Wastewater Treatment Plants." *WPCF Manual of Practice No. 11* (1970).

14. "Public Relations for Water Pollution Control." *WPCF Manual of Practice No. 12* (1965).

15. "Wastewater Treatment Plant Operator Training Course One" (without visual aids). *WPCF Manual of Practice No. 13* (1966).

16. "Wastewater Treatment Plant Operator Training Course Two" (without visual aids). *WPCF Manual of Practice No. 14* (1967).

17. "Paints and Protective Coatings for Wastewater Treatment Facilities." *WPCF Manual of Practice No. 17* (1969).

18. *Handbook for Monitoring Industrial Wastewater.* U.S. EPA, Office of Technology Transfer (August 1973).

[1]The best selections will vary, depending on needs of specific treatment works.

The unit process system and subsystem descriptions should include most, if not all, of the items shown in Table 16-5. If an item is adequately described in one of the references, only essential or special information should be included in the O&M manual on that item. The reference should be identified by volume and page for easy and quick availability to the operator.

TABLE 16-5

DESIRED DETAIL ON EACH PROCESS SYSTEM IN O&M MANUAL

Purpose:

Simple Statement of Purpose.

Description:

Utilizing a Schematic or Isometric Sketch, Describe the Elements of the Process System or Subsystem.

Design Criteria:

(1) Unit Sizes and Capacities
(2) Hydraulic and Organic Loadings
(3) Detention Times.

Flow Control (Regulation and Distribution of Wastewater):

(1) Manual/Automatic
(2) Weir Settings
(3) Pump Speed Settings

(4) Gate Openings
(5) Maximum Water Elevation and Ranges
(6) Bypassing the System or Subsystem.

Process Control and Performance Evaluation:
(1) Equipment Controls: Manual, Automatic, and Special Instrumentation
(2) Performance Evaluation: Expected Performance Range, Laboratory Evaluation, and Visual Evaluation
(3) Process Troubleshooting Guide
Definition of Problems (Cause)
Effect on Process
Possible Remedies
Remedy Reference.

Normal Operation:
(1) Normally On-line Systems
(2) Normal Control/Instrumentation Settings
Weir Settings
Wet Well Levels
RPM Settings
High-Low Speed, etc.
(3) Startup and Shutdown Procedures.

Emergency Operations and Safety Considerations:
(1) Unusual Conditions Specific to Unit Process.
(2) Emergency Operation Procedures.

16.5 Monitoring

Federal and State effluent and receiving water quality standards require that certain parameters of small wastewater treatment plant effluents be monitored (17). The specific regulations stipulate which characteristics are to be monitored, where, and how often. The U.S. EPA secondary treatment effluent standards require regular BOD_5, SS, and coliform tests as a minimum. More stringent requirements than are in the EPA definition of secondary treatment are sometimes needed to meet regulatory standards in different areas (18).

For small wastewater treatment plants with flows less than 1 mgd, the minimum sampling frequency may be a monthly test of the plant effluent for BOD_5 (mg/l), SS (mg/l), settleable solids (mg/l), pH, residual chlorine (mg/l), and fecal coliform (MPN per 100 ml) on a weekday (not Saturday, Sunday, or a holiday) when flows are being measured. The samples tested should be 8-hour composites, except for the chlorine residual, which should be a grab sample (19).

Additional sampling and testing may be required for process control at specific plants, and to obtain data for future upgrading design (20). A sampling program established for each wastewater treatment plant must include: 1) location of sample; 2) analyses to be made; 3) information as to whether the samples to be tested are to be based on grab or 2-, 8-, or 24-hour composites; and 4) information as to whether the composite is to be based on samples taken at 15-minute, 30-minute, or 1-hour intervals. Table 16-6 shows a typical sampling and analysis schedule for an aerated, facultative lagoon treatment plant in which the pond effluent passes through a slow sand filter, is chlorinated before discharge, and must meet stringent stream water quality standards.

Manholes, sampling ports, or taps should be provided to secure samples from all process and plant influents and effluents. The interprocess connections also should be designed so that all interprocess flows can be sampled and measured for control purposes. In other words, monitoring requires knowledge of the flow rate at the time each sample is taken. Monitoring of a wastewater treatment plant might require at least periodic measurement of several of the following: DO, pH, temperature, TKN, HN_3-N and NO_3-N, phosphates, nitrifier-inhibited BOD (for 2-, 3-, 5-, and 7-day incubations), oxidation-reduction potential, combined chlorine, free chlorine, settleable solids, total SS, turbidity, alkalinity, TOC, COD, insolation, wind velocities and directions, precipitation and evaporation, in addition to plant effluent BOD_5, coliform, and SS levels. Many of these parameters can be monitored automatically. Decisions as to which characteristics are essential for satisfactory plant operation, or are required for control, should be made during the design stages before the plant is constructed. The selection of a monitoring plan is discussed in reference (21).

16.6 Laboratory Facilities

Recommended laboratory facilities are generally discussed in references (19) and (22). Municipal wastewater treatment plant laboratories, however, must be specifically tailored for each individual installation.

If a backup laboratory is not easily available, the facility should include, as a minimum, laboratory testing facilities to analyze wastewater samples for BOD_5, SS, settleable solids, pH, residual chlorine, and fecal coliforms. Even part-time operators should be taught how to run these tests and be expected to perform them regularly.

The document *Estimating Laboratory Needs for Municipal Wastewater Treatment Facilities* (19) states that the laboratory space required will normally be no less than 150 ft^2 (14 m^2) for trickling filters and treatment ponds, or 180 ft^2 (17 m^2) minimum for activated sludge, physical-chemical, or AWT plants. The equipment needed for process and effluent control at plants smaller than 1 mgd is listed in Table 16-7. This equipment must be compatible with processes selected and the monitoring program. Additional items, other than those listed in Table 16-7, may be needed for some plants.

The Enforcement Division of EPA region VII (23), prepared a list of laboratory equipment required to conduct satisfactorily the analyses of wastewater samples for BOD, pH, SS, and fecal coliform. This equipment list is presented in Table 16-8.

TABLE 16-6

TYPICAL SAMPLING AND TESTING PROGRAM (7)

		RAW WASTEWATER	RECYCLE	CELL 1 EFFLUENT	CELL 2 EFFLUENT	CELL 3 EFFLUENT	SAND FILTER EFFLUENT	CHLORINE CONTACT TANK EFFLUENT	PLANT EFFLUENT
	SETTLEABLE SOLIDS	$^{4}C_{8}$ / D		G / D_2					
	SUSPENDED SOLIDS	$^{2}C_{8}$ / W	$^{2}C_{8}$ / M	$^{2}C_{8}$ / M	$^{2}C_{8}$ / M	$^{2}C_{8}$ / M	$^{2}C_{8}$ / M		$^{2}C_{8}$ / W
	VOLATILE SUSPENDED SOLIDS	$^{2}C_{8}$ / W	$^{2}C_{8}$ / M						$^{2}C_{8}$ / M
	TOTAL DISSOLVED SOLIDS	$^{2}C_{8}$ / Q							
	TOTAL VOLATILE DISSOLVED SOLIDS	$^{2}C_{8}$ / M	$^{2}C_{8}$ / Q	$^{2}C_{8}$ / Q	$^{2}C_{8}$ / Q	$^{2}C_{8}$ / Q	$^{2}C_{8}$ / Q		$^{2}C_{8}$ / M
	TOTAL SOLIDS	$^{2}C_{8}$ / Q							$^{2}C_{8}$ / Q
	BOD_5	$^{2}C_{8}$ / W	$^{2}C_{8}$ / M			$^{2}C_{8}$ / M	$^{2}C_{8}$ / M		$^{2}C_{8}$ / W
	DISSOLVED OXYGEN	G / D_2	G / D_2			G / D_2			G / D_2
	GREASE	$^{2}C_{8}$ / M							
	RESIDUAL CHLORINE							G / D_2	G / D_2
	COLIFORM ORGANISMS	$^{2}C_{12}$ / M						G / W	G / W
WHILE SAMPLING	FLOW	$^{2}C_{8}$ / D	$^{2}C_{8}$ / M					D_2	$^{2}C_{8}$ / W
WHILE SAMPLING	pH	$^{2}C_{8}$ / D	$^{2}C_{8}$ / M					G / D_2	$^{2}C_{8}$ / W
WHILE SAMPLING	WASTEWATER TEMPERATURE	$^{2}C_{8}$ / D	$^{2}C_{8}$ / M	D_2	D_2	D_2		C / D_2	$^{2}C_{8}$ / W

LEGEND

TYPE OF SAMPLE

C - COMPOSITE SAMPLE

G - GRAB SAMPLE

$^{2}C_{8}$ - 8 HOUR COMPOSITE OF SAMPLES TAKEN EACH 2 HOURS

FREQUENCY OF SAMPLE

D - DAILY

W - WEEKLY (every 8 days)

M - MONTHLY (every 32 days)

Q - QUARTERLY (Jan, Apr, Jul, Oct)

D_2 - TWICE DAILY

TABLE 16-7

MINIMUM LABORATORY EQUIPMENT NEEDS FOR TYPICAL 1-MGD OR SMALLER WASTEWATER TREATMENT PLANTS WHERE BACKUP LABORATORY FACILITIES ARE NOT EASILY AVAILABLE

Analytical Balance
Bookcase
Centrifuge
Chlorine Residual Analyzer and Recorder
Eye Wash
File Cabinet
Flow Meter With Totalizer/Indicator
Fume Hood
Hot Plate
Incubator (BOD)
Incubator (microbiological)
Lab Stool
Microscope
Muffle Furnace
Oven pH Meter
Pump (vacuum-pressure)
Refrigerator
Safety Shower
Sterilizer
Still
Thermometers (registering)
Turbidimeter

TABLE 16-8

LABORATORY EQUIPMENT LIST FOR MONITORING (23)

Description	Quantity
BIOCHEMICAL OXYGEN DEMAND (BOD)	
Balance, Analytical, Mettler *H31*[1]	1
Beaker, 250 ml	4
Bottle, BOD, 300 ml	12
Bottle, Polyethylene, 8 oz	4
Bottle, Weighing, 30 ml	2
Buret, 25 ml	2
Cylinder, Graduated, 10 ml	2
Cylinder, Graduated, 100 ml	2
Cylinder, Graduated, 1000 ml	2
Flask, Volumetric, 1000 ml	2
Incubator, BOD	1
Oven, Drying	1
Pipet, Measuring, 1 ml	2
Pipet, Volumetric, 5 ml	2
Stirring Rods, Glass	12
Support, Double Burette	1
Tygon Tubing, 1/4 in. by 1/16 in.	10 ft
REAGENTS	
Calcium Chloride Solution, 2.75%	32 oz
Dextrose Reagent	1 lb
Ferric Chloride Solution, 0.025%	32 oz
Glutamic Acid	100 gm
Magnesium Sulfate Solution, 2.25%	32 oz
Phosphate Buffer Solution, pH 7.2	32 oz
Potassium Iodide Solution, 10%	32 oz
Sodium Hydroxide Solution, 1 N	32 oz
Sodium Sulfite Reagent	1 lb
Starch Solution	16 oz
Sulfuric Acid Reagent, Concentrated	9 lb
Sulfuric Acid Solution, 1 N	32 oz
pH VALUE	
pH meter, Corning Model 7[1]	1
TOTAL SUSPENDED MATTER (nonfilterable residue)	
Balance, Analytical, Mettler *H31*	1
Bottle, Wash, 250 ml	1
Cylinder, Graduated, 100 ml	2

Description	Quantity
TOTAL SUSPENDED MATTER (nonfilterable residue) (contd.)	
Desiccator, 250 mm	1
Filter Disks, Glass Fiber, 55 mm	1 box
Filter Pump	1
Flask, Filtering, 500 ml	2
Forceps	1
Funnel, Buechner, Plate Diameter = 56 mm	1
Oven, Drying	1
Rubber Stopper, 1 hole, No. 7	4
Rubber Tubing, 1/4 in. by 3/16 in.	4 ft
Silica Gel, Indicating	1-1/2 lb
FECAL COLIFORM MEMBRANE FILTER PROCEDURE	
Autoclave	1
Autoclave, Pressure Control	1
Balance, Triple Bean	1
Bottle, Water Sample, 125 ml	8
Burner, Tirrill	1
Cylinder, Graduated, 100 ml	2
Cylinder, Graduated, 500 ml	2
Dishes, Petri, 60 by 15 mm, 500/case	1 case
Distillation Apparatus, Glass or Water Demineralizer with Cartridge	1
Filter Funnel Assembly	1
Filter Pump	1
Flask, Erlenmeyer, 125 ml, with Screw Cap	8
Flask, Erlenmeyer, 500 ml, with Screw Cap	4
Flask, Filtering, 1000 ml	2
Forceps	2
Hot Plate	1
Membrane Filters, 47 mm Diameter, 0.45 Micron Pore Size	1 box
Paper, Weighing	1 package
Pipet, Serological, 2 ml	2
Refrigerator	1
Rubber Stopper, 1 Hole, No. 8	4
Rubber Tubing 1/4 in. by 1/16 in.	4 ft
Rubber Tubing 1/4 in. by 3/16 in.	4 ft
Spatula, 8 in.	1
Sterilizer, Hot Air (Optional)	1
Water Bath (±0.2° C)	1
Water Bath Gable Cover	1
M-FC Broth	1/4 lb

[1]or equivalent

16.7 Workshop Facilities

It is important that the downtime for repairs be kept to a minimum. If backup workshop facilities are not readily available, a larger than minimum workshop should be included at the plant and provision made for sharing it with other community or government agencies.

Some of the tools and equipment that might be considered for different types of plant workshops, or made available locally, are:

Hand Tools

Hammer
Hand saw(s)
Pliers
Wrenches
Screwdrivers

Yard Tools

Rake
Axe
Pick
Shovels
Hoe
Wheelbarrow
Lawn mower
Sledge hammer

Shop Equipment

Work bench with vise
Power drill and bits
Tapping machine
Soldering irons
Grease guns
Power grinder
Blow torch
Paint gun
Micrometer
Ammeter-voltmeter

Miscellaneous Equipment

Portable pump
Folding tripod with chain hoist
Chain saw
Portable heater
Sewer rods and other pipe cleaners
Lathe
Milling machine
Welding machine
Compressor
Sewer rods and other pipe cleaners

The workshop must be a dry place and must be able to store not only commonly used tools and equipment but also rented equipment or tools used in emergencies. There should be a labeled place for everything, and the operator should keep everything in its place, when it is not in active use.

Some locked cabinets should be provided, particularly for smaller tools. Spare parts, especially those easily broken, that wear out often, or are critical to continuous operation, should also be kept in the workshop.

Preventing potential vandalism should be considered in the design of all facilities. Chain link fences should surround the site. If feasible, the fence should be far enough from open tanks and breakable equipment to prevent damage from thrown rocks. In some areas, unattended buildings should be windowless and equipment enclosures bulletproof; it has been found, for instance, that chain link fences may incite trespassers and vandals, so unattended buildings should be made of brick without windows and with roofs which are not flammable or easily damaged.

16.8 Safety

Much has been written already on safety considerations at wastewater treatment plants. Two particularly helpful publications are the U.S. EPA background report, *Safety in the Design, Operation, and Maintenance of Wastewater Treatment Works* (24) and the WPCF *Manual of Practice No. 1*, "Safety in Wastewater Works" (25).

16.9 References

1. *Federal Guidelines on Operation and Maintenance of Wastewater Treatment Facilities.* U.S. EPA, Office of Water and Hazardous Materials (August 1974).

2. *Guide for the Support of Rural Water-Wastewater Systems.* Commission on Rural Water, Chicago (1974).

3. *Personal Communications with Oakland County Public Works* (1974).

4. Seymour, G.G., "Operation and Performance of Package Treatment Plants." *Journal Water Pollution Control Federation* (February 1972).

5. Lamp, G.E., Bauman, E.R., McRoberts, K.L., and Smith, C.E., *Estimating Staffing and Cost Factors for Small Wastewater Treatment Plants Less Than 1 MGD,* Part II. U.S. EPA, Office of Water Program Operations (June 1973).

6. "Operation of Wastewater Treatment Plants." WPCF *Manual of Practice No. 11* (1970).

7. Lampe, G.E., Baumann, E.R., McRoberts, K.L., and Smith, C.E., *Staffing Guidelines for Conventional Municipal Wastewater Treatment Plants Less than 1 MGD.* Engineering Research Institute, Iowa State University (June 1973).

8. Isaacs, P.C.G., *The Use of Package Plants for Treatment of Wastewaters* (June 1964).

9. *Estimating Staffing for Municipal Wastewater Treatment Facilities.* U.S. EPA, Office of Water Program Operations (March 1973).

10. *Criteria for the Establishment and Maintenance of Two Year Post High School Wastewater Technology Training Programs.* Clemson University and U.S. EPA, Division of Manpower and Training, Vols. 1 and 2 (1970).

11. *Criteria for the Establishment and Maintenance of Two Year Post High School Wastewater Technology Training Programs – Trainee Workbooks.* Clemson University and U.S. EPA Division of Manpower and Training (August 1973).

12. *Rules and Regulations for Certification of Operators of Wastewater Treatment Facilities.* Massachusetts Board of Certification of Operators of Wastewater Treatment Facilities, Boston (1973).

13. *Educational Systems for Operators of Water Pollution Control Facilities.* Proceedings, Clemson University (November 1969).

14. *Considerations for Preparation of Operation and Maintenance Manuals* U.S. EPA, Office of Water Program Operations (1974).

15. *Maintenance Management Systems for Municipal Wastewater Treatment Works.* U.S. EPA, Office of Water Program Operations (1973).

16. *Guide to the Preparation of Operational Plans for Sewage Treatment Facilities.* EPA-R2-73-263 (July 1973).

17. *Handbook for Monitoring Industrial Wastewater.* U.S. EPA, Office of Technology Transfer (August 1973).

18. Blakely, C.P., and Thompson, I.W., "Pollution Control and Energy Conservation: Are They Compatible?" WPCF *Deeds and Data* (December 1974).

19. *Estimating Laboratory Needs for Municipal Wastewater Treatment Facilities.* U.S. EPA, Office of Water Program Operations, EPA-430/9-74-002 (June 1973).

20. Ingols, R.S., and Morriss, R.H., "Control Monitoring for the Activated Sludge Process." WPCF *Deeds and Data* (August 1973).

21. Roesler, J.F., *Factors to Consider in the Selection of a Control Strategy.* EPA, Cincinnati (May 1972).

22. *Handbook for Analytical Quality Control.* U.S. EPA, Office of Technology Transfer (June 1972).

23. *Information Packet on Monitoring for Discharge Permit Compliance.* U.S. EPA, Region VII, Enforcement Division, Compliance Branch, Kansas City, Mo. (July 1974).

24. Hanlon J., and Saxon, T., *Technical Report on Safety in the Design, Operation, and Maintenance of Wastewater Treatment Works.* U.S. EPA, Office of Water Program Operations (1975).

25. "Safety in Wastewater Works." WPCF *Manual of Practice No. 1* (1969).

CHAPTER 17

COST-EFFECTIVENESS

17.1 Background

The objective of cost-effectiveness planning is the minimization of costs (1). In implementing a plan to achieve approved water quality standards, a community (sometimes assisted by Federal and State funds) will incur capital costs for construction and ongoing costs for administration, management, operation, and maintenance. To be cost effective, the plan must minimize the total cost of pollution control to the public and natural resources. A cost-effective plan for a community must consider regional development as well as national, state, and community plans for land use, industry, energy, water supply, and transportation.

Each of these plans will contain basic requirements that must be met by a recommended facility. Alternative facility plans that will meet the basic requirements must be developed and compared, to determine which plant best meets the total requirements at the lowest cost.

Billions of dollars will be needed over the next decade for wastewater treatment, and wastewater treatment is only part of the total municipal capital works that will be needed in this period. With spending of this magnitude, all areas of planning and management of such facilities must be carefully organized, to achieve the highest possible levels of cost effectiveness.

17.2 Cost-Effectiveness Analysis Regulations

In October 1973, *Cost-Effectiveness Analysis Guidelines,* authorized under Section 212 (2) (c) of the Federal Water Pollution Control Act, Public Law 92-500, became effective (2). Important requirements of these guidelines include:

1. Planning Period: 20 Years
2. Cost Elements:
   a. Contractors, including overhead and profit
   b. Land, including relocation
   c. Engineering, including design, field exploration, and services during construction and plant startup
   d. Administrative and legal, including costs of bond sales
   e. Startup and operator training
   f. Interest during construction
   g. Operation and maintenance, divided between fixed and variable with wastewater flow
3. Prices: those prevailing at time of study without considering inflation, unless all prices will not rise at same rate
4. Interest (Discount) Rate: 6.125 percent per year until 30 June 1975 (see Table 17-1).

TABLE 17.1

6.125% COMPOUND INTEREST FACTORS

	Single Payment		Uniform Series			
Years	CAF F/P	PWF P/F	SFF A/F	CRF A/P	CAF F/A	PWF P/A
1	1.0612	0.9422	1.00000	1.06125	0.999	0.942
2	1.1262	0.8879	0.48514	0.54639	2.061	1.830
3	1.1952	0.8366	0.31372	0.37497	3.187	2.666
4	1.2684	0.7883	0.22816	0.28941	4.382	3.455
5	1.3461	0.7428	0.17695	0.23820	5.651	4.198
6	1.4285	0.6999	0.14291	0.20416	6.997	4.898
7	1.5160	0.6595	0.11868	0.17993	8.425	5.557
8	1.6089	0.6215	0.10058	0.16183	9.941	6.179
9	1.7074	0.5856	0.08657	0.14782	11.550	6.764
10	1.8120	0.5518	0.07542	0.13667	13.258	7.316
11	1.9230	0.5200	0.06635	0.12760	15.070	7.836
12	2.0408	0.4899	0.05884	0.12009	16.993	8.326
13	2.1658	0.4617	0.05253	0.11378	19.034	8.788
14	2.2985	0.4350	0.04716	0.10841	21.200	9.223
15	2.4393	0.4099	0.04255	0.10380	23.498	9.633
16	2.5887	0.3862	0.03855	0.09980	25.938	10.019
17	2.7472	0.3639	0.03505	0.09630	28.526	10.383
18	2.9155	0.3429	0.03197	0.09322	31.274	10.726
19	3.0941	0.3231	0.02924	0.09049	34.189	11.049
20	3.2836	0.3045	0.02682	0.08807	37.283	11.354
21	3.4847	0.2869	0.02465	0.08590	40.567	11.641
22	3.6981	0.2704	0.02270	0.08395	44.052	11.911
23	3.9247	0.2547	0.02094	0.08219	47.750	12.166
24	4.1650	0.2400	0.01935	0.08060	51.675	12.406
25	4.4202	0.2262	0.01790	0.07915	55.840	12.632
26	4.6909	0.2131	0.01659	0.07784	60.260	12.846
27	4.9782	0.2008	0.01539	0.07664	64.951	13.046
28	5.2831	0.1892	0.01430	0.07555	69.929	13.236
29	5.6067	0.1783	0.01329	0.07454	75.212	13.414
30	5.9501	0.1680	0.01237	0.07362	80.819	13.582
31	6.3146	0.1583	0.01152	0.07277	86.769	13.741
32	6.7014	0.1492	0.01074	0.07199	93.084	13.890

TABLE 17.1 (Cont.)

6.125% COMPOUND INTEREST FACTORS

	Single Payment		Uniform Series			
Years	CAF F/P	PWF P/A	SFF A/F	CRF A/P	CAF F/A	PWF P/A
33	7.1118	0.1406	0.01002	0.07127	99.785	14.030
34	7.5474	0.1324	0.00935	0.07060	106.897	14.163
35	8.0097	0.1248	0.00873	0.06998	114.445	14.288
36	8.5003	0.1176	0.00816	0.06941	122.454	14.405
37	9.0210	0.1108	0.00763	0.06888	130.955	14.516
38	9.5735	0.1044	0.00714	0.06839	139.976	14.621
39	10.1599	0.0984	0.00668	0.06793	149.549	14.719
40	10.7822	0.0927	0.00626	0.06751	159.709	14.812
41	11.4426	0.0873	0.00586	0.06711	170.491	14.899
42	12.1434	0.0823	0.00549	0.06674	181.934	14.982
43	12.8872	0.0775	0.00515	0.06640	194.078	15.059
44	13.6766	0.0731	0.00483	0.06608	206.965	15.132
45	14.5143	0.0688	0.00453	0.06578	220.641	15.201
46	15.4033	0.0649	0.00425	0.06550	235.156	15.266
47	16.3467	0.0611	0.00399	0.06524	250.559	15.327
48	17.3480	0.0576	0.00374	0.06499	266.906	15.385
49	18.4105	0.0543	0.00351	0.06476	284.254	15.439
50	19.5382	0.0511	0.00330	0.66455	302.664	15.490

Where:

CAF = Compound amount factor = $(1 + i)^n$ = $1 at compound interest

PWF = Present worth factor = $1/(1 + i)^n$ = Present value of $1 due in future

SFF = Sinking fund factor = $1/(1 + 1)^n - 1$ = Periodic deposit to obtain future $1

CRF = Capital recovery factor = $i(1 + i)^n /(1 + i)^n - 1$ = Period payment on $1 loan

USCAF = Uniform series CAF = $(1 + i)^n - 1/i$ = How $1 deposited periodically grows

USPWF = Uniform series PWF = $(1 + i)^n - 1/i\ (1+ i)^n$ = Present value of $1 payable periodically

F = Compound amount or future value

P = Initial investment or single Payment

A = Annual investment or periodic payment

5. Service life:
   a. Land, permanent
   b. Structures, 30 to 50 years
   c. Process equipment, 15 to 30 years
   d. Auxiliary equipment, 10 to 15 years
6. Salvage Value:
   a. Land, full value
   b. Structures, specific market or reuse value at end of design period, estimated using straight-line depreciation

17.3 Energy Conservation

Energy conservation must be as carefully considered as cost effectiveness and environmental impacts in choosing the best alternative. A report entitled *Electrical Power Consumption for Wastewater Treatment* (3) contains general information on energy costs for various typical treatment processes. Additional information on power requirements is presented in chapters 9 and 16 of this manual.

The costs of gasoline, oil, and natural gas are expected to remain relatively high, making other energy sources more competitive. Therefore, the present worth of alternative equipment employing different energy sources should be evaluated very carefully.

17.4 Methodology

The literature describes many methods of cost-effectiveness analyses; in addition, state or regional authorities may have cost-effectiveness analyses guidelines. The primary aspects to be considered in seleecting viable alternatives for a cost-effectiveness study include:

1. The requirements listed in the U.S. EPA *Cost-effectiveness Analysis Guidelines* (2)
2. Minimum quality criteria for the receiving water or land as established by Federal, State, and regional governments
3. Effluent quality requirements
4. The possibility of some form of land disposal (usually considered by the EPA an alternative to be studied)
5. Environmental compatability requirements, as estabilished in the National Environmental Policy Act of 1969
6. Area and regional master plans
7. Financial Capabilities of the community to meet initial and annual wastewater costs
8. Available energy resources, both short and long term
9. Local capabilities for operation and maintenance of wastewater facilities
10. The habits, attitudes, and social patterns of the residents of the community

The short- and long-term effects on the community and region of not building or of phased construction should also be considered. Building facilities in stages is sometimes the only feasible alternative.

In studying alternatives, the designer should include vulnerability studies and costs of standby emergency facilities for each feasible alternative. Five steps in reducing system vulnerability include:

1. List disastrous events that could strike the facility or locality.
2. Examine the system's vulnerability to each type of possibly disastrous event.
3. Determine critical components and design protective measures.
4. Determine the cost of protection versus the cost of loss of service of the system.
5. Recommend the appropriate actions.

Some of the areas benefitting from clean water include recreation, aesthetics, community water supplies, fish and other aquatic life, wildlife, agriculture, industry, channel and ship maintenance, corrosion control, and commercial fishing. Some of the costs of a wastewater treatment facility to a community include damages caused by odors, noise, aerosols, and damage to aesthetics. The added cost of new technology to make each alternative partially or wholly environmentally compatible should be included in any analysis.

If interest rates are high, phased construction to minimize unused capacity must be carefully examined in any cost-effectiveness analysis. Public participation in the final evaluation of the cost-effectiveness analysis is essential, particularly if costs must be increased to achieve environmental compatibility.

Reference (4) presents methods to be used in preparing estimates of capital and annual costs; these methods may also be used in the cost estimates of selected alternative solutions.

1. Treatment plant: equipment, instrumentation, piping and plumbing, electrical, heating, ventilating, air conditioning, structures, buildings, outside storage and conveyance, interconnecting process lines, tankage
2. Ancillary utilities and service: electrical, steam, fuel
3. Site improvements: ancillary structures and buildings, engineering, owner administration, startup and operator training, land, contingencies.

Estimates of annual costs should include:

1. Annual capital charges
2. Interest of nondepreciable capital investment
3. Amortization of royalties, licenses, and fees
4. Direct operating costs
5. Operating and maintenance labor
6. Fuel, power, steam, utility water
7. Supplies and maintenance materials
8. Contract services
9. Raw materials
10. Chemicals

11. Transportation
12. Residual waste disposal
13. Indirect operating costs
14. Administration and staff
15. Taxes
16. Insurance

Each of the above capital and annual cost estimating items is explained in detail in reference (4).

17.5 Cost Effectiveness of Infiltration/Inflow Reduction

The Federal Water Pollution Control Act Amendments of 1972 require all applicants for a treatment works grant to demonstrate that each sewer system discharging into such treatment works is not subject to excessive infiltration/inflow (I/I). The objectives are to:

1. Eliminate untreated wastewater bypasses and overflows
2. Lower total costs of treatment works
3. Avoid construction of unnecessary treatment works capacity
4. Reduce total wastewater volume

The last three objectives are based on cost effectiveness. Such a study should include 1) an in-depth, rigorous, economic analysis, based on detailed records of all costs plus the documentation of corrections made, the reduction in I/I resulting from the corrections, the durability of repairs made by sealing, and overall performance of all correction methods used; and 2) an evaluation of the costs of all alternatives with and without correction. I/I Sufficient detailed cost information relating to specific quantities of I/I treated and quantitative reductions in I/I achieved must be available before this evaluation can be made. It may be desirable to make periodically (at 5-year intervals), for example, such an evaluation to check progress, upgrade program, and verify economics. This study should be required for all applicants prior to stage 2 work, even if the preliminary analysis did not demonstrate the need for a preliminary evaluation survey and I/I correction program prior to stage 1 work. The economic evaluation study allows confirmation of correction of all decisions made previously.

17.6 Costs

Average initial and annual costs for small wastewater treatment facilities are shown on Figures 17-1 and 17-2. These costs are based on generalized 1973 values. Technological advancements, more reliability, and changes in regulation make invalid the use of these curves for other than broad conclusions. Cost indices can be used to convert cost data based on past conditions to present conditions. Because they cannot take into account all technological and economic changes, these indices must be considered general. Cost indices should be used only to update costs no more than 10 years old. Indices commonly used in the United States for wastewater treatment facilities are presented in Table 17-2. For costs of wastewater treatment processes, the EPA cost index is usually most suitable.

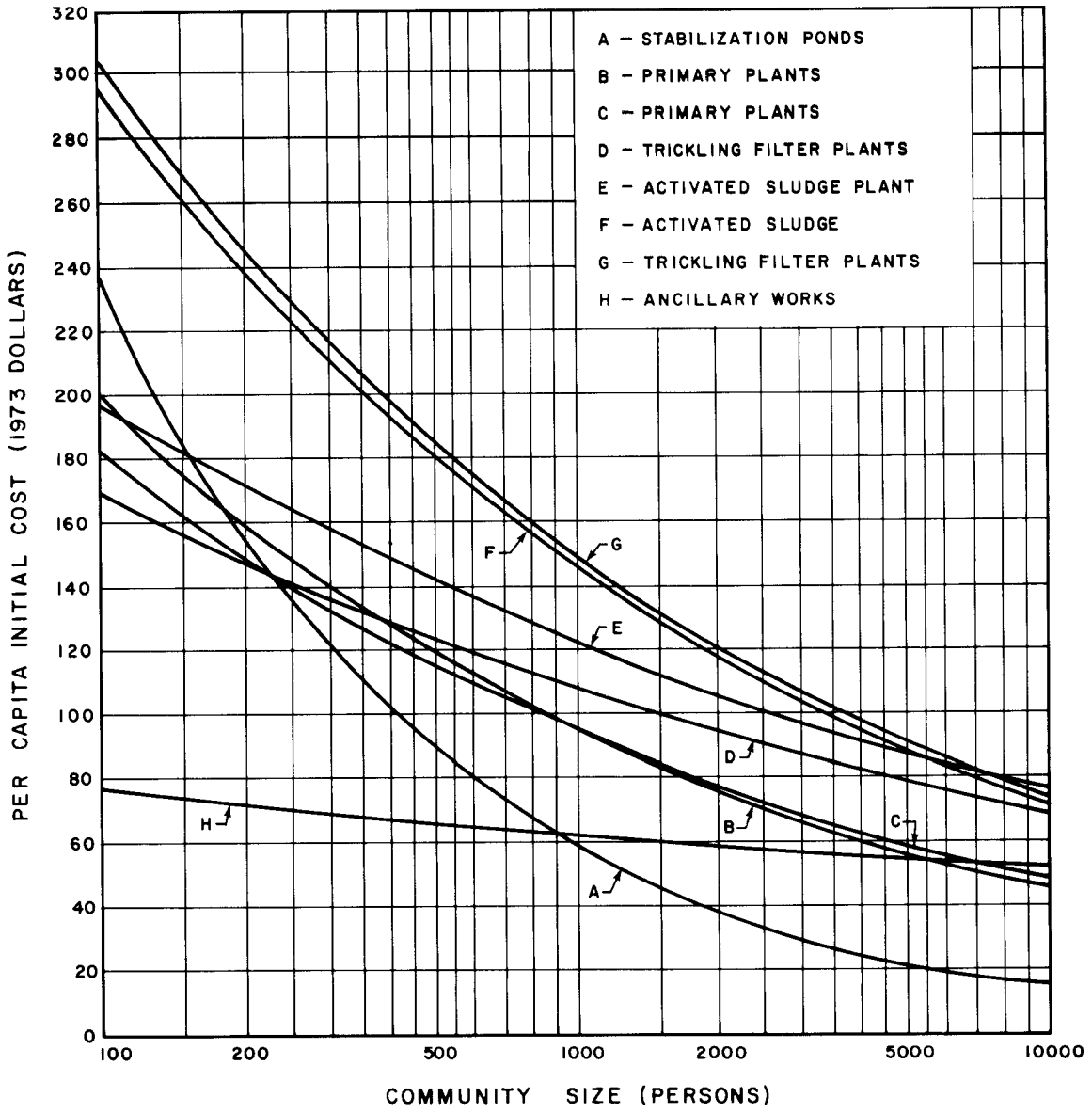

FIGURE 17-1

INITIAL COSTS OF WASTEWATER SYSTEM COMPONENTS (4) (5)

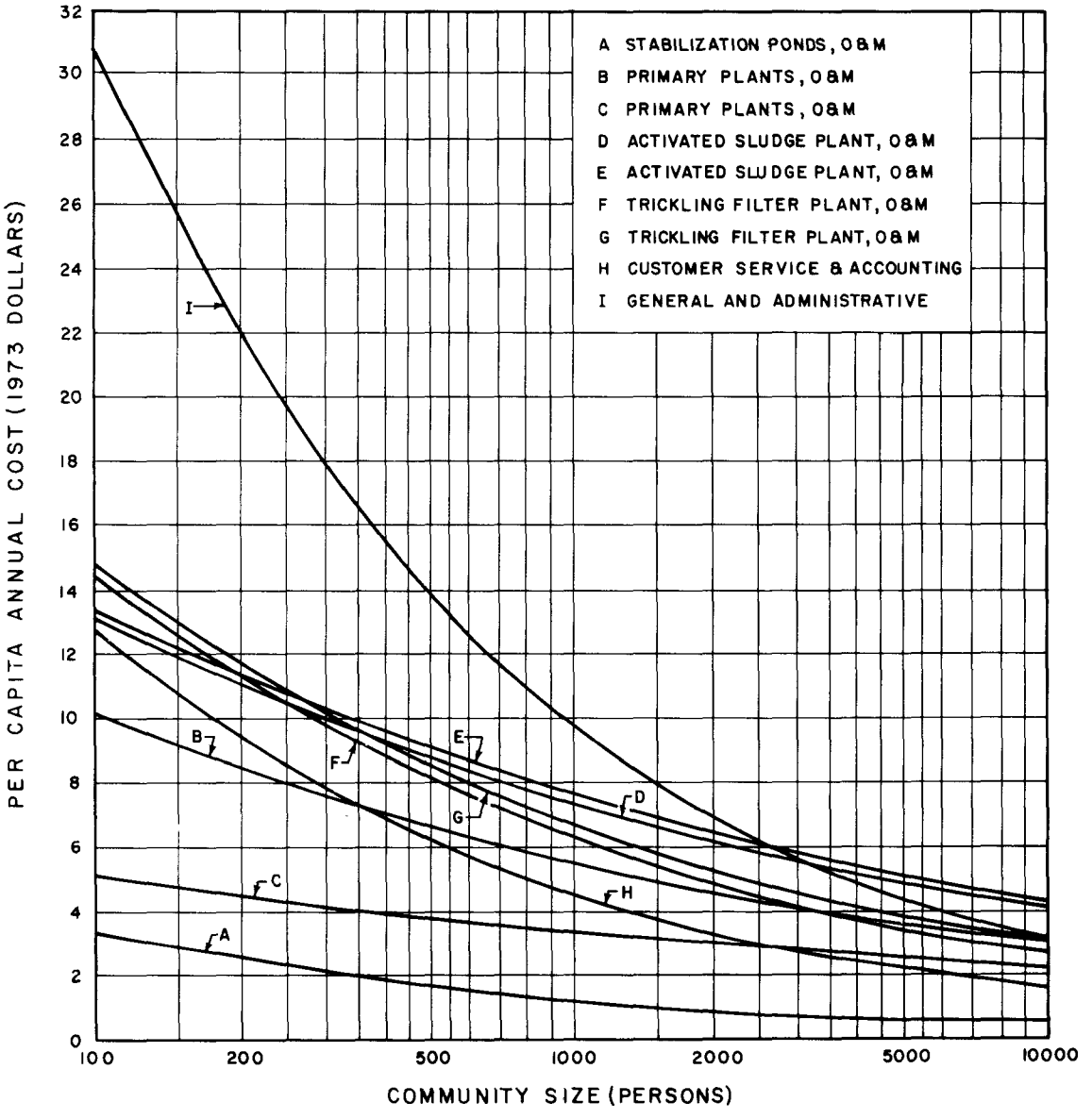

FIGURE 17-2

ANNUAL COSTS OF WASTEWATER SYSTEM COMPONENTS (4) (5)

TABLE 17-2

COST INDICES (Average Per Year)

Year	Marshall & Stevens Installed Equipment Indices	Engineering News-Record Construction Index	Handy-Whitman Index for Water Treatment Plants[1]		Engineering News-Record Building Cost Index	Chemical Engineering Plant Construction Index	EPA Sewage Treatment Plant Construction Index
	1926=100	1913=100	1936=100		1913=100	1957-1959=100	1957-1959=100
	All Industry		Large Plant	Small Plant			
1950	168	510	210	213	375	74	
1951	180	543	225	229	400	80	
1952	181	569	235	235	416	81	
1953	183	600	246	246	431	85	
1954	185	628	251	251	446	86	
1955	191	660	258	257	465	88	
1956	209	690	275	276	491	94	
1957	225	724	288	289	509	99	
1958	229	759	296	296	525	100	102
1959	235	797	311	309	548	102	104
1960	238	824	317	317	559	102	105
1961	237	847	315	315	568	101	106
1962	239	872	324	322	580	102	107
1963	239	901	330	327	594	102	109
1964	242	936	340	336	612	103	110
1965	245	971	350	346	627	104	112
1966	252	1021	368	362	652	107	116
1967	263	1043[3]	380[3]	374[3]	660	110	119
1968	273	1111[3]	398	389	695	114	123
1969	285	1206[3]	441	424	760	119	132
1970	303	1311[3]	480	462	801	126	143
1971	321	1465[3]			877	132	160
1972	332	1666[3]			1013	137	172
1973	344	1812[3]			1113	144	182
1974	398	1935[3]			1150[3]	165	217
1975	444	2125[3]			1260[3]	182	250
1976	472	2300[3]			1367[3]	192	262
1977	491[4]	2540[5]			1520[5]	199[2]	271[2]

[1]Based on July of year.
[2]Based on March of year.
[3]Based on January of year.
[4]Based on first quarter of year.
[5]Based on June of year.

Tchobanoglous, converting costs to July 1973 values, prepared comparative costs for the most commonly used wastewater treatment processes at a design flow of 1 mgd (5). Estimated initial capital and total annual costs, adjusted to an EPA STP cost index, are presented in Tables 17-3 and 17-4. The ratio of costs for the population of a specific community to costs for a population of 10,000 may be determined from Table 17-4 and Figure 17-1.

A survey was conducted (6) of unit costs of the unit processes at 40 wastewater treatment plants. The results, adjusted to an EPA STP cost index of 225, are presented in Table 17-5.

In 1970 Michel (7) statistically analyzed data on municipal waste treatment and developed cost equations, based on design population for different types of treatment, as follows:

$$C_c = aP^b$$
$$C_o = dP^e$$

where

C_c = # capital costs
C_o = # annual costs
P = design population

a, b, d, and e = Constants (see Table 17-6)

In 1974, Tihansky (8) summarized previous cost information on wastewater treatment costs and described the state-of-the-art on cost formulations from a historical perspective. Reference (8) contains a comprehensive list of references on municipal wastewater treatment costs.

Such factors as ground-water or poor soil conditions could necessitate more costly structures, if site conditions are not fully investigated. For example, uplift of structures, because of rising groundwater, foundation requiring piling, tight sheeting for excavation and dewatering, pumping to keep groundwater levels low, and many other conditions must be included in estimates for the structures required for a specific location.

TABLE 17-3

ESTIMATED CAPITAL COSTS FOR ALTERNATIVE TREATMENT PROCESSES WITH A DESIGN FLOW OF 1 mgd (6)

Process	Cost Range $ x 10^3
Stabilization pond	200 - 300
Extended aeration, aerated pond, or oxidation ditch[1, 2]	400 - 600
Rotating Biological Contactor (RBC)[1, 2, 3]	700 - 1,000
Trickling Filter[1, 2, 3]	200 - 1,000
Complete Mix or Contact Stabilization[1, 2, 3]	900 - 1,000
Land Disposal (Infiltration/Percolation)	
Including Primary Treatment	760 - 900
Including Secondary Treatment	580 - 1,320
Land Disposal (Irrigation or Overland Flow)	
Including Primary Treatment	880 - 1,040
Including Secondary Treatment	700 - 1,460

Note: Based on a July 1973 EPA STP Cost Index of 183. Excludes disinfection, land, and wastewater collection and transmission costs. Includes contractor's profit and allowance for contingencies and engineering.

---

[1] Includes Screening.
[2] Includes secondary sedimentation and sludge drying beds.
[3] Includes primary sedimentation and digestion.

TABLE 17-4

ESTIMATED TOTAL ANNUAL COSTS FOR ALTERNATIVE TREATMENT PROCESSES WITH A DESIGN FLOW OF 1 mgd (5)

Process	Initial Capital Cost	Annual Cost[1] Capital[2]	O&M[3]	Total
	$ x 10^3	$ x 10^3		
Stabilization Pond	250	27.45	23.68	51.13
Extended Aeration, Aerated Pond, or Oxidation Ditch	500	54.90	48.80	103.70
Rotating Biological Contactor	800	87.83	57.68	145.51
Trickling Filter	800	87.83	58.48	146.31
Complete Mix or Contact Stabilization	1,000	109.79	74.41	184.20
Land Disposal (Inflitration/Percolation)				
Including Primary Treatment	800	87.83	65.10	152.93
Including Secondary Treatment	1,000	109.79	99.51	209.30
Land Disposal (Irrigation or Overland Flow)				
Including Primary Treatment	940	103.30	81.54	184.84
Including Secondary Treatment	1,240	136.14	115.95	252.09

[1]Based on Engineering News-Record Construction Cost Index of 1900 (EPA STP cost index = 183).
[2]Capital Recorvery Factor = 0.1098 (15 years at 7 percent interest).
[3]Based on values from Tables 17-5 and 17-6.

TABLE 17-5

CONSTRUCTION COSTS FOR UNIT PROCESSES
FOR WASTEWATER TREATMENT PLANTS

Process	Cost $\$ \times 10^3$
Raw Wastewater Pumping (1 mgd)	82
Degritting and Flow Gaging (1 mgd)	19
Screening, Degritting, and Flow Gaging (mgd)	38
Sedimentation (1,000 ft^2 surface area)	61
Trickling Filter (5,000 ft^3 media)	38
Aeration Structures (3,000 ft^3)	19
Diffused Aeration (100-cfm blower)	27
Mechanical Aerators (20-hp installed capacity)	39
Recirculation Pumping (0.5 mgd)	37
Chlorination Feed System (10 lb/day)	16
Chlorination Contact Basin (2,000 ft^3)	15
Primary Sludge Pumping (40 gpm)	45
Sludge Digestion (2,000 ft^3)	194
Sludge Drying Beds (7,000 ft^2)	19
Administration and Laboratory Buildings (1 mgd)	50

TABLE 17-6

COST FUNCTIONS OF MUNICIPAL WASTE TREATMENT (7) (8)

Technology	Regression Coefficient			
	Capital Costs		O & M Costs	
	a	b	d	e
Ordinary Treatment				
Primary Sedimentation	675.7	-0.33	25.0	-0.26
Activated Sludge	912.7	-0.31	30.1	-0.25
Trickling Filter	942.0	-0.31	55.0	-0.36
Waste Stabilization Ponds	2,863.1	-0.61	17.4	-0.42
Upgrading Primary to Activated Sludge	1,484.0	-0.41	–	–
Ancillary Works[1]	86.3	-0.09	–	–
Tertiary Treatment				
Microscreening	9.4	-0.12	0.3	-0.04
Filtration	207.1	-0.34	51.3	-0.38
Two-stage Lime Clarification				
< 10 mgd	140.9	-0.26	148.6	-0.44
> 10 mgd	50.1	-0.18	11.0	-0.23
Lime Precalcination				
< 10 mgd	1,903.2	-0.50	30.0	-0.30
> 10 mgd	–	–	9.4	-0.21
Ammonia Stripping				
< 10 mgd	–	–	35.5	-0.33
> 10 mgd	22.7	-0.10	3.5	-0.13
Carbon Adsorption				
< 10 mgd	1,439.6	-0.40	1,418.9	-0.55
> 10 mgd	79.0	-0.14	23.9	0.20

[1] Includes interceptors, outfalls, and pumping stations.

NOTE: m^3/day = mgd x 3,785.

17.7 References

1. *Cost Effectiveness in Water Quality Programs.* U.S. EPA, Office of Air and Water Programs (October 1972).

2. "Cost Effectiveness Analysis." Federal Register, U.S. EPA, vol. 38, No. 174, title 40, part 35, appendix A, p. 24639. (10 September 1973).

3. *Electrical Power Consumption for Municipal Wastewater Treatment.* U.S. EPA, Office of Research and Development, EPA-R2-73-281 (July 1973).

4. *Cost Estimating Guidelines for Wastewater Treatment Systems.* Bechtel Corporation for FWQA, WPCF Series ORD 17090DRU07 (1970).

5. Tchobanoglous, G., *Wastewater Treatment for Small Communities.* Conference on Rural Environmental Engineering, Warren, Vermont (September 1973).

6. Patterson, W. L., and Banker, R. F., *Estimating Costs and Manpower Requirements for Conventional Wastewater Treatment Facilities.* U.S. EPA, Office of Research and Monitoring (October 1971).

7. Michel, R.L., et al., "Operation and Maintenance of Plants: Municipal Waste Treatment Plants." *Journal Water Pollution Control Federation,* vol. 41, p. 335 (1969).

8. Tihansky, D.P., "Historical Development of Water Pollution Control Cost Functions," *Journal Water Pollution Control Federation,* vol. 46, p. 813 (1974).

GLOSSARY

ACIDITY – Quantitative capacity of aqueous solutions to react with hydroxylions. Measured by titration, with a standard solution of a base to a specified end point. Usually expressed as milligrams per liter of calcium carbonate.

ACTIVATED CARBON – Carbon "activated" by high-temperature heating with steam or carbon dioxide, producing an internal porous particle structure. Total surface area of granular activated carbon is estimated to be 1,000 m^2/gm.

ADSORPTION – Adhesion of an extremely thin layer of molecules (gas or liquid) to the surfaces of solids (e.g., granular activated carbons) or liquids with which they are in contact.

AERATE – To permeate or saturate a liquid with air.

ALKALINITY – Capacity of water to neutralize acids, imparted by the water's content of carbonates, bicarbonates, hydroxides, and occasionally borates, silicates, and phosphates. Expressed in milligrams per liter of equivalent calcium carbonate.

ANAEROBIC WASTE TREATMENT – Waste stabilization brought about by the action of microorganisms in the absence of air or elemental oxygen. Usually refers to waste treatment by methane fermentation.

ASSIMILATIVE CAPACITY – Capacity of a natural body of water to receive 1) wastewaters, without deleterious effects; 2) toxic materials, without damage to aquatic life or humans consuming the water; and 3) BOD, within prescribed dissolved oxygen limits.

BACKWASH – Process by which water is forced through a filtration bed in the direction opposite to the normal flow (usually upward). During backwashing, the granular bed expands, allowing material previously filtered out to be washed away.

BIOASSAY – Assay method using a change in biological activity as a qualitative or quantitative means of analyzing the response of biota to industrial wastes and other wastewaters. Viable organisms, such as live fish or daphnia, are used as test organisms.

BIOCHEMICAL OXYGEN DEMAND (BOD) – Measure of the concentration of organic impurities in wastewater. The amount of oxygen required by bacteria while stabilizing organic matter under aerobic conditions, expressed in milligrams per liter, is determined entirely by the availability of material in the wastewaters to be used as biological food and by the amount of oxygen utilized by the microorganisms during oxidation.

BIOLOGICAL OXIDATION – Process in which living organisms in the presence of oxygen convert the organic matter contained in wastewater into a more stable or mineral form.

BUFFER – Any combination of chemicals used to stabilize the pH or alkalinities of solutions.

BYPASS – Pipe or channel that permits wastewater to be transported around a wastewater facility or any unit of the facility. Usually found in facilities receiving combined flow or high infiltration rates, it is utilized to prevent flooding of units; or, in case of shutdown for repair work, allows the flow to be moved to parallel units.

CALIBRATION – Determination, checking, or rectifying of the graduation of any instrument giving quantitative measurements.

CHEMICAL COAGULANT – Destabilization and initial aggregation of colloidal and finely divided suspended matter by the addition of floc-forming chemical.

CHEMICAL OXYGEN DEMAND (COD) – Measure of the oxygen-consuming capacity of inorganic and organic matter present in water or wastewater, expressed as the amount of oxygen consumed from a chemical oxidant in a specific test. It does not differentiate between stable and unstable organic matter and thus, does not necessarily correlate with biochemical oxygen demand.

CHEMICAL PRECIPITATION – Separating a substance from a solution, resulting in the formation of relatively insoluble matter.

CHLORINATION – Application of chlorine to water or wastewater, generally for the purpose of disinfection, but frequently for accomplishing other biological or chemical results.

CHLORINE CONTACT CHAMBER – Detention basin in which a liquid containing diffused chlorine is held for a sufficient time to achieve a desired degree of disinfection.

CHLORINE DEMAND – Difference between the amount of chlorine added to the wastewater and the amount of residual chlorine remaining at the end of a specific contact time. The chlorine demand for given water varies with the amount of chlorine applied, time of contact, temperature, pH, and nature and amount of impurities in the water.

CLARIFICATION – Any process or combination of processes to reduce the concentration of suspended matter in a liquid.

COAGULATION – Process by which chemicals (coagulants) are added to an aqueous system, to render finely divided, dispersed matter with slow or negligible settling velocities into more rapidly settling aggregates. Forces that cause dispersed particles to repel each other are neutralized by the coagulants.

COLLOIDAL MATTER – Dispersion of very small (1 mμ to 0.5 μ) particles that will not settle but may be removed by coagulation or biochemical action or membrane filtration.

COMMINUTION – Process of cutting and screening solids contained in wastewater flow before it enters the pumps or other units in the treatment plant.

COMPOSITE WASTEWATER SAMPLE – Combination of individual samples of water or wastewater taken at selected intervals (generally hourly or some similar specified period), to minimize the effect of the variability of the individual sample. Individual samples may have equal volume or may be roughly proportional to the flow at time of sampling.

DENITRIFICATION – Chemically-bound oxygen in nitrate or nitrate ions stripped away by microorganisms, producing nitrogen gas, which can cause floc to rise in the final sedimentation process. An effective method of removing nitrogen from wastewater.

DETENTION TIME – Average period of time a fluid element is retained in a basin or tank before discharge.

DIALYSIS – Separation of a colloid from a substance in true solution, by allowing the solution to diffuse through a semi-permeable membrane.

DUAL MEDIA FILTRATION – Filtration process that uses a bed composed of two distinctly different granular substances (such as anthracite coal and sand), as opposed to conventional filtration through sand only.

EFFECTIVE SIZE – Size of the particle that is coarser than 10 percent, by weight, of the material; i.e., the size sieve that will permit 10 percent of the granular sample to pass while retaining the remaining 90 percent. Usually determined by the interpolation of a cumulative particle size distribution.

ELECTRICAL CONDUCTIVITY – Reciprocal of the resistance in ohms measured between opposite faces of a centimeter cube of an aqueous solution at a specified temperature. Expressed as microhms per centimeter in degrees Celsius.

ENDOGENOUS RESPIRATION – Auto-oxidation of cellular material, which takes place inside a cell in the absence of assimilable external organic material, to furnish the energy required for the replacement of exhausted components of protoplasm.

ENERGY HEAD – Height of the hydraulic grade line above the center line of a conduit plus the velocity head resulting from the mean velocity of the water in that section.

FATS – Triglyceride esters of fatty acids. Erroneously used as synonym for grease.

FLOC – Agglomeration of finely divided or colloidal particles resulting from certain chemical-physical or biological operations.

FOOD TO MICRO-ORGANISM RATIO (F/M) – Aeration tank loading parameter. Food may be expressed in pounds BOD added per day to the aeration tank; micro-organisms may be expressed as mixed liquor volatile suspended solids (MLVSS) in the aeration tank.

FREEBOARD – Vertical distance from the top of a tank, basin, column, or wash trough (in the case of sand filters) to the surface of its contents.

GAGING STATION – Point on a stream or conduit at which measurements of flow are customerily made and that includes a stretch of channel through which the flow is uniform and a control downstream from this stretch. The station usually has a recorder or gage for measuring the elevation of the water surface in the channel or conduit.

GRAB SAMPLE – Single sample of wastewater taken at neither set time nor flow.

GREASE – In wastewater, a group of substances, including fats, waxes, free fatty acids, calcium and magnesium soaps, mineral oils, and certain other nonfatty materials. The type of solvent and method used for extraction should be stated for quantification.

GREASE SKIMMER – Device for removing floating grease or scum from the surface of wastewater in a tank.

GRIT CHAMBER – Detention chamber or an enlargement of a sewer, designed to reduce the velocity of flow of the liquid, to permit the separation of mineral from organic solids by differential sedimentation.

HARDNESS – Characteristic of water imparted by salts of calcium, magnesium, and iron (such as bicarbonates, carbonates, sulfates, chlorides, and nitrates), which causes curdling of soap, deposition of scale in boilers, damage in some industrial processes, and sometimes objectionable taste. It may be determined by a standard laboratory procedure or computed from the amounts of calcium, magnesium, iron, aluminum, manganese, barium, strontium, and zinc, and is expressed as equivalent calcium carbonate.

HYDRAULIC LOADING – Quantity of flow passing through a column or packed bed, expressed in the units of volume per unit time per unit area; e.g., gal/min/ft^2 ($m^3/m^2 \cdot s$).

HYDROPHILIC – Having a high affinity for water.

HYDROPHOBIC – Having a low affinity for water.

HYGROSCOPIC – Solid capable of absorbing moisture from the air without eventual dissolution in that moisture.

HYPERFILTRATION – High pressure reverse osmosis process using a membrane that will remove dissolved salts as well as suspended solids.

INDUSTRIAL WASTES – Liquid wastes from industrial processes, as distinct from domestic or sanitary wastes.

INFILTRATION – Ground water that seeps into pipes, channels, or chambers through cracks, joints, or breaks.

INFLUENT – Wastewater or other liquid (raw or partially treated) flowing into a reservoir, basin, treatment process, or treatment plant.

INORGANIC MATTER – Chemical substances of mineral origin; not of basically carbon structure, with animal or vegetable origin.

IONS – Atom or group of atoms with an unbalanced electrostatic charge.

POND – 1) Shallow body of water, i.e., lagoon or lake; or 2) pond containing raw or partially treated wastewater in which aerobic or anaerobic stabilization occurs.

METHYL-ORANGE ALKALINITY – Measure of the total alkalinity of an aqueous suspension or solution, determined by the quantity of sulfuric acid required to bring the water pH to a value of 4.3, as indicated by the change in color of methyl orange. Expressed in milligrams $CaCO_3$ per liter.

MICROSCREENING – Form of surface filtration using specially woven wire fabrics mounted on the periphery of a revolving drum.

MIXED LIQUOR – Mixture of activated sludge and wastewater undergoing activated sludge treatment in the aeration tank.

MIXED LIQUOR SUSPENDED SOLIDS (MLSS) – Concentration of suspended solids carried in the aeration basin of an activated sludge process.

MONITORING – 1) measurement, sometimes continuous, of water or wastewater quality; or 2) procedure or operation of locating and measuring radioactive contamination, by means of survey instruments that can detect and measure, as dose rate, ionizing radiations.

MOST PROBABLE NUMBER (MPN) – Number of organisms per unit volume that, in accordance with statistical theory, would be more likely than any other number to yield the observed test result with the greatest frequency. Expressed as density of organisms per 100 ml. Results are computed from the number of positive findings of coliform organisms resulting from multiple-portion decimal-dilution plantings.

NEUTRALIZATION – Reaction of acid or alkali with the opposite reagent until the concentrations of hydrogen and hydroxyl ions in the solution are approximately equal.

NITRIFICATION – Conversion of nitrogenous matter to nitrates.

NONSETTLEABLE SOLIDS – Suspended matter that does not settle or float to the surface of water in a period of 1 hour.

ORGANIC MATTER – Chemical substances of animal or vegetable origin of basically carbon structure, comprising compounds consisting of hydrocarbons and their derivatives.

ORGANIC NITROGEN – Nitrogen combined in organic molecules, such as protein, amines, and amino acids.

OVERFLOW RATE – One of the criteria for the design of settling tanks in treatment plants, expressed in gallons per day per square foot ($m^3/m^2 \cdot d$) of surface area in the settling tank.

OXIDATION – Addition of oxygen to a compound. More generally, any reaction involving the loss of electrons from an atom.

OXIDATION POND OR LAGOON – Basin used for retention of wastewater before final disposal, in which biological oxidation of organic material is effected by natural or artificially accelerated transfer of oxygen to the water from air.

OXIDATION-REDUCTION POTENTIAL (ORP) – Potential required to transfer electrons from the oxidant to the reductant; used as qualitative measure of the state of oxidation in wastewater treatment systems.

OXYGEN UPTAKE RATE – Amount of oxygen utilized by an activated sludge system during a specific time period.

PARSHALL FLUME – Calibrated device developed by Ralph Parshall for measuring the flow of liquid in an open conduit, which consists essentially of a contracting length, a throat, and an expanding length. A sill, over which the flow passes at critical depth, is located at the throat. The upper and lower heads are individually measured at a definite distance from the sill. The lower head need not be measured unless the sill is submerged more than about 67 percent.

PATHOGENIC ORGANISMS – Organisms, usually microscopic in size (e.g., bacteria and viruses), that may cause disease in the host organisms by their parasitic growth.

pH - Reciprocal of the logarithm of the hydrogen ion concentration. The concentration is the weight for hydrogen ions, in grams per liter of solution. Neutral water, for example, has a pH value of 7 and hydrogen ion concentration of 10^{-7}.

PHENOLPHTHALEIN ALKALINITY – Measure of the hydroxides plus one-half the normal carbonates in aqueous suspension. Measured by the amount of sulfuric acid required to bring the water to a pH of 8.3, as indicated by a change in color of phenolphthalein. Expressed in parts per million of calcium carbonate.

PHYSICAL-CHEMICAL TREATMENT (PCT) PLANT – Treatment sequence in which physical and chemical processes are used to the exclusion of explicitly biological process (including incidential biological treatment obtained on filter media or absorptive surfaces). In this sense, a PCT scheme is a substitute for conventional biological treatment. A PCT scheme following an existing biological plant may, by contrast, be termed simply a tertiary plant, although it is also a PCT in a general sense.

POLYELECTROLYTES – Chemicals consisting of high molecular weight molecules with many reactive groups situated along the length of the chain. Polyelectrolytes react with the fine particles in the waste and assist in bringing them together into larger and heavier masses for settling.

POSTCHLORINATION – Application of chlorine to the final treated wastewater or effluent following plant treatment.

PRECHLORINATION – Chlorination at the headworks of the plant; influent chlorination prior to plant treatment.

PRIMARY SETTLING TANK – First settling tank for the removal of settleable solids through which wastewater is passed in a treatment works.

PRIMARY TREATMENT - 1) First (sometimes only) major treatment in a wastewater treatment works, usually sedimentation; or 2) removal of a substantial amount of suspended matter, but little or no colloidal and dissolved matter.

RAW SLUDGE – Settled sludge promptly removed from sedimentation tanks before decomposition has much advanced. Frequently referred to as undigested sludge.

RECALCINATION – Process for recovering lime for reuse by heating spent lime to high temperatures, thereby driving off water of hydration and carbon dioxide.

RECARBONATION – Addition of carbon dioxide to lime-treated water, to reduce the pH of the waste for further calcium removal and/or stabilization of the water.

RECIRCULATION RATE – Rate of return of part of the effluent from a treatment process to the incoming flow.

RESIDUAL CHLORINE – Chlorine remaining in water or wastewater at the end of a specified contact period as combined or free chlorine.

SALINITY – 1) Relative concentration of salts, such as sodium chloride, in a given water, usually expressed in terms of the number of parts per million of chloride (Cl); or 2) measure of the concentration of dissolved mineral substances in water.

SAMPLER – Device used with or without flow measurement, to obtain an adequate portion of water or waste for analytical purposes. May be designed for taking a single sample (grab), composite sample, continuous sample, or periodic sample.

SANITARY SEWER – Sewer that carries liquid and water-carried human wastes from residences, commercial buildings, industrial plants, and institutions, together with minor quantities of storm, surface, and groundwater(s) that are not admitted intentionally. Significant quantities of industrial wastewater are not carried in sanitary sewers.

SCREEN – Device with openings, generally of uniform size, used to retain or remove suspended or floating solids in flowing water or wastewater and to prevent them from entering an intake or passing a given point in a conduit. The screening element may consist of parallel bars, rods, wires, grating, wire mesh, or perforated plate; the openings may be of any shape, although they are usually circular or rectangular. Also a device used to segregate granular material, such as sand, crushed rock, and soil, into various sizes.

SECONDARY SETTLING TANK – Tank through which effluent from some prior treatment process flows for the purpose of removing settleable solids.

SECONDARY WASTEWATER TREATMENT – Treatment of wastewater by biological methods after primary treatment by sedimentation.

SECOND-STAGE BIOLOGICAL OXYGEN DEMAND – Part of the oxygen demand associated with the biochemical oxidation of nitrogenous material. As the term implies, the oxidation of the nitrogenous materials usually does not start until a portion of the carbonaceous material has been oxidized during the first stage.

SEDIMENTATION – Process of subsidence and deposition of suspended matter carried by water, wastewater, or other liquids, by gravity. Usually accomplished by reducing the velocity of the liquid to below the point at which it can transport the suspended material. Also called settling.

SELF-PURIFICATION – Natural processes occurring in a stream or other body of water resulting in the reduction of bacteria, satisfaction of the BOD, stabilization of organic constituents, replacement of depleted dissolved oxygen, and the return of the stream biota to normal. Also called natural purification.

SEMIPERMEABLE MEMBRANE – Barrier, usually thin, that permits passage of particles up to a certain size or of special nature. Often used to separate colloids from their suspending liquid, as in dialysis.

SETTLEABLE SOLIDS – 1) Matter in wastewater that will not stay in suspension during a preselected settling period (such as 1 hour) but settles to the bottom or floats to the top; 2) in the Imhoff cone test, the volume of matter that settles to the bottom of the cone in 1 hour.

SKIMMING TANK – Tank so designed that floating matter will rise and remain on the surface of the wastewater until removed, while the liquid discharges continuously under certain walls or scum baffles.

SLOUGHINGS – Trickling filter slimes that have been washed off filter media. They are generally quite high in BOD and will degrade effluent quality unless removed.

SLUDGE AGE – In the activated sludge process, a measure of the length of time (expressed in days) a particle of suspended solids has been undergoing aeration. Usually computed by dividing the weight of the suspended solids in the aeration tank by the daily addition of new suspended solids having their origin in the raw waste.

SLUDGE VOLUME INDEX (SVI) – Numerical expression of the settling characteristics of activated sludge. The ratio of the volume in milliliters of sludge settled from a 1,000-ml sample in 30 minutes to the concentration of mixed liquor in milligrams per liter multiplied by 1,000.

SODA ASH – Sodium Carbonate (Na_2CO_3)

STABILIZATION POND - Type of oxidation pond in which biological oxidation of organic matter is effected by natural or artificially accelerated transfer of oxygen to the water from air.

STAFF GAGE – Graduated scale, vertical unless otherwise specified, on a plank, metal plate, pier, wall, etc., used to indicate the height of a fluid surface above a specified point or datum plane.

STAGE-DISCHARGE RELATION – Relation between the water height, as indicated on the staff gage, and the discharge of a stream or conduit at a gaging station. This relation is shown by the rating curve or rating table for such stations.

STATIC HEAD – Total head, without reduction for velocity head or losses; for example, the difference in the elevation of headwater and tailwater of a power plant. Also the vertical distance between the free level of the source of supply and the point of free discharge of the level of the free surface.

STILLING WELL – Pipe, chamber, or compartment with comparatively small inlets communicating with a main body of water. Used to dampen waves or surges while permitting the water level within the well to rise and fall with the major fluctuations of the main body of water. Used with water-measuring devices, to improve accuracy of measurement.

SUBMERGED WEIR –Weir that, when in use, results in the water level on the downstream side rising to an elevation equal to, or higher than, the weir crest. The rate of discharge is affected by the tailwater. Also called drowned weir.

SURFACE AREA – Amount of surface area per unit weight of carbon, usually expressed in square meters per gram of carbon. The surface area of activated carbon is usually determined from the nitrogen adsorption isotherm by the Brunauer, Emmett, and Teller method (BET method).

SUSPENDED SOLIDS – Solids that float on the surface of, or are in suspension in, water, wastewater, or other liquids, and that are largely removable by laboratory filtering. Also the quantity of material removed from wastewater in a laboratory test, as prescribed in *Standard Methods for the Examination of Water and Wastewater* and referred to as non-filterable residue.

THRESHOLD ODOR NUMBER – Test is based on comparison with an odor-free water, obtained by passing tap water through a column of activated carbon. The water being tested is diluted with odor-free water until the odor is no longer detectable. The last dilution at which an odor is observed is the threshold odor number.

TOTAL ORGANIC CARBON (TOC) – Measure of the amount of organic material in a water sample, expressed in milligrams per liter of carbon. Measured by Beckman carbonaceous analyzer or other instrument in which the organic compounds are catalytically oxidized to CO_2 and measured by an infrared detector. Frequently applied to wastewaters.

TITRATION – Determination of a constituent in a known volume of solution, by the measured addition of a solution of known strength to completion of the reaction, as signaled by observation of an end point.

TOTAL SOLIDS – Sum of dissolved and undissolved constituents in water or wastewater, usually expressed in milligrams per liter.

TRACER – Foreign substance mixed with, or attached to, a given substance for the determination of the location or distribution of the substance. Also an element or compound that has been made radioactive so it can be easily followed (traced) in biological and industrial processes. Radiation emitted by the radioisotope pinpoints its location.

TURBIDIMETER – Instrument for measurement of turbidity, in which a standard suspension is generally used for reference.

TURBIDITY – Condition in water or wastewater caused by the presence of suspended matter, resulting in the scattering and absorption of light rays. Measure of fine suspended matter in liquids. Analytical quantity, usually expressed in Jackson turbidity units (Jtu), determined by measurements of light diffraction.

TURBULENT FLOW – Flow of a liquid past an object so that the velocity at any fixed point in the fluid varies irregularly. Type of fluid flow in which there is an unsteady motion of the particles and the motion at a fixed point varies in no definite manner. Sometimes called eddy or sinuous flow.

ULTIMATE BIOCHEMICAL OXYGEN DEMAND (UBOD) – Quantity of oxygen required to satisfy completely both first-stage and second-stage biochemical oxygen demands.

UNIFORMITY COEFFICIENT – Obtained by dividing the sieve opening in millimeters that will pass 60 percent of a sample by the sieve opening in millimeters that will pass 10 percent of the sample. These values are usually obtained by interpolation of a cumulative particle size distribution.

VOLATILE SOLIDS – Quantity of solids in water, wastewater, or other liquids lost on ignition of the dry solids at 600° C.

WET WELL – Compartment in which a liquid is collected and held for flow equalization and then pumped (by system pumps) for transmission through the plant.

☆ U S. GOVERNMENT PRINTING OFFICE· 1977-758-959