HANDBOOK FOR
MONITORING INDUSTRIAL WASTEWATER

U. S. ENVIRONMENTAL PROTECTION AGENCY
Technology Transfer

August 1973

ACKNOWLEDGEMENTS

This manual was prepared for the U. S. Environmental Protection Agency Office of Technology Transfer by Associated Water & Air Resources Engineers, Inc., Nashville, Tennessee.

NOTICE

The mention of trade names or commercial products in this manual is for illustration purposes, and does not constitute endorsement or recommendation for use by the U. S. Environmental Protection Agency.

FOREWORD

The formation of the United States Environmental Protection Agency marked a new era of environmental awareness in America. This Agency's goals are national in scope and encompass broad responsibility in the area of air and water pollution, solid wastes, pesticides, noise, and radiation. A vital part of EPA's national water pollution control effort is the constant development and dissemination of new technology for pollution control.

The purpose of this manual is to provide guidance to manufacturers initiating or upgrading wastewater monitoring programs. It is recognized that there are a number of analytical standards and texts available for specialists in the analysis of wastewater. It is the intent of this manual to present information on the complete scope of wastewater monitoring in a form which can be readily used by managers, engineers, and scientists who, although thoroughly familiar with manufacturing processes, have not previously specialized in water pollution control.

Monitoring is an extremely rapidly developing field, and innovative changes are continual. While this manual represents the best judgement of the printing, it must be realized that subsequent developments may have improved the area of application of many techniques.

Also, applicability of many samplers, instruments, and analytical techniques is strongly dependent upon the type of wastewater being monitored. This manual, therefore, must be recognized as a guide to allow the user to arrive quickly at the point where decisions on his specific waste can be made. The manual is not intended to be regulatory or to restrict the innovation which has characterized this field over the past few years.

ABSTRACT

This handbook for industrial wastewater monitoring comprises a compilation of information for use and reference in planning, executing and continuing a program of industrial waste monitoring. Philosophy of monitoring needs, planning, sampling, measuring, and analysis is presented for familiarization by industrial plant managers. Sufficient detail is given for those who wish to explore more deeply some of the practical and theoretical aspects of any of the phases of a monitoring program. A logical procedure is suggested and direction given for those responsible for industrial plant waste control programs. Automated sampling, measuring, and analytical devices are described and methods of use outlined. Manual procedures and non-automated methods are likewise presented. Use of the collected data is discussed. Special considerations for industrial-municipal joint treatment are briefly described. Numerous references are included for the reader who needs more detailed information on special tests, equipment or procedures, necessary for the successful conduct of a monitoring program.

This manual is presented as helpful guidance only, and is not a regulatory document.

TABLE OF CONTENTS

Chapter			Page
	FOREWORD		iii
	ABSTRACT		iv
	TABLE OF CONTENTS		v
	LIST OF FIGURES		viii
	LIST OF TABLES		x
1	INTRODUCTION		1-1
	1.1	General	1-1
	1.2	The Need for a Monitoring Program	1-1
2	PROGRAM PLANNING		2-1
	2.1	Organizing the Program	2-1
	2.2	Cost Optimization	2-1
3	THE WASTE SURVEY		3-1
	3.1	Introduction	3-1
	3.2	Flow Sheet	3-1
	3.3	Mass Balance	3-3
	3.4	Sewer Map	3-3
	3.5	Location of Sampling Stations	3-4
	3.6	Coordination with Production Staff	3-7
	3.7	References	3-7
	3.8	Additional Reading	3-7
4	PARAMETERS TO BE MEASURED		4-1
	4.1	Introduction	4-1
	4.2	Undesirable Waste Characteristics	4-1
	4.3	Additional Reading	4-12
5	ANALYTICAL CONSIDERATIONS		5-1
	5.1	Introduction	5-1
	5.2	Analyses for Major Physical Characteristics	5-1
	5.3	Nonspecific Analyses for Measuring Quantity of Organic Compounds	5-7
	5.4	Specific Analysis for Organic Compounds	5-12
	5.5	Analysis for Inorganic Anions	5-12
	5.6	Analysis for Dissolved Oxygen	5-12
	5.7	Analysis for Phosphorus and Nitrogen Compounds	5-13
	5.8	Analysis for Pathogenic Bacteria	5-13
	5.9	Estimating the Amount of Pollutants Present by Use of "Kits"	5-14
	5.10	Selective Ion Electrodes	5-14
	5.11	Automated Wet Chemistry	5-14
	5.12	Bioassay Tests	5-14
	5.13	Cost of Wastewater Analysis	5-14
	5.14	References	5-15
	5.15	Additional Reading	5-15

	5.16	List of Some Manufacturers of Analytical Apparatus and Control	5-16
6	SAMPLING		6-1
	6.1	Introduction	6-1
	6.2	Types of Samples	6-1
	6.3	Manual Sampling	6-3
	6.4	Automatic Sampling	6-3
	6.5	Frequency of Sampling and Duration of Sample Program	6-3
	6.6	Sample Handling	6-5
	6.7	Bacteriological Samples	6-8
	6.8	Sampling for Radioactivity	6-8
	6.9	Sample Preservation	6-8
	6.10	Equipment Available for Sampling	6-11
	6.11	References	6-28
	6.12	Additional Reading	6-28
	6.13	List of Some Manufacturers of Wastewater Sampling Equipment	6-29
7	FLOW MEASUREMENTS		7-1
	7.1	Introduction	7-1
	7.2	Some Basic Hydraulic Considerations	7-1
	7.3	Flow Measuring Devices for Pipes	7-3
	7.4	Methods for Computing the Flow from Freely Discharging Pipes	7-10
	7.5	Methods and Devices for Measuring the Flow in Open Channels	7-19
	7.6	Miscellaneous Flow Measuring Methods	7-37
	7.7	Secondary Flow Measurement Devices	7-37
	7.8	Friction Formulas	7-40
	7.9	References	7-47
	7.10	Additional Reading	7-47
	7.11	List of Some Manufacturers of Flow Measuring Devices	7-48
8	DATA ANALYSIS		8-1
	8.1	General	8-1
	8.2	Specific Application of Statistics to Waste Monitoring Programs	8-2
	8.3	Developing the Mean, Standard Deviation and Variance for Random Data	8-2
	8.4	References	8-14
9	AUTOMATIC MONITORING		9-1
	9.1	Introduction	9-1
	9.2	Control Systems	9-2
	9.3	Examples of Automatic Monitoring Systems	9-4
	9.4	Effluent Monitoring by Biological Methods	9-10
	9.5	References	9-10
	9.6	Additional Reading	9-11
10	THE CONTINUING PROGRAM		10-1
	10.1	Introduction	10-1
	10.2	Training Technicians	10-1
	10.3	Production Changes	10-1

	10.4	Analysis of Data	10-2
	10.5	Maintenance and Trouble Shooting	10-2
	10.6	References	10-2
	10.7	Additional Reading	10-2
11	SPECIAL CONSIDERATIONS FOR MUNICIPAL SYSTEMS		11-1
	11.1	Introduction	11-1
	11.2	Deleterious Effects on Joint Systems from Industrial Discharges	11-2
	11.3	Establishing and Implementing a Monitoring System	11-4
	11.4	References	11-6
	11.5	Additional Reading	11-6
12	TRAINING OF TECHNICIANS		12-1
	12.1	Introduction	12-1
	12.2	Survey Technicians	12-1
	12.3	Laboratory Technicians	12-1
	12.4	Operating Technicians	12-1
	12.5	Safety	12-2
	12.6	Additional Reading	12-2
13	SAFETY		13-1
	13.1	General Safety Considerations	13-1
	13.2	Additional Reading	13-3
14	GLOSSARY		14-1
15	CONVERSION TABLES		15-1
	15.1	References	

LIST OF FIGURES

Figure No.		Page No.
2-1	Steps Involved in Establishing an Effluent Monitoring Program	2-2
3-1	Flow Diagram of a Tomato Processing Plant	3-2
3-2	Example of Wastewater Sampling Station Location in a Complex Petrochemical Industry	3-5
5-1	Schematic Diagram of Wastewater Characterization	5-2
6-1	Continuous Sampler	6-11
6-2	Air Release Type Sampler	6-12
6-3	The "Scoop" Sampler Installation and Details of Assembly	6-14
6-4	Wheel with Buckets	6-15
6-5	"Flow Proportional" Sampler Control Systems	6-16
6-6	Constant Flow System	6-17
6-7	Air Lift Automatic Sampler System	6-18
6-8	Air Lift Automatic Sampler (Operating Principle)	6-19
6-9	Combination Sampler	6-20
6-10	"CVE" Sampler System Schematic	6-21
6-11	Chain Type Sampler	6-23
6-12	Non Plugging Effluent Vary-Sampler	6-24
6-13	Portable Automatic Sampler	6-25
6-14	Markland "Duckbill" Sampler	6-26
7-1	Venturi Meter	7-4
7-2	Curve for Determining the Values of K Used in The Orifice, Venturi, and Flow Nozzle Equations	7-5
7-3	Flow Nozzle in Pipe	7-7
7-4	Coefficients of Several Types of Orifices	7-8
7-5	Relative Permanent Pressure Loss of Primary Elements	7-9
7-6	Magnetic Flow Meter	7-11
7-7	Pitot Tube Measures Velocity Head	7-12
7-8	Open Pipe Flow Measurement	7-16
7-9	How To Measure Discharge from a Pipe	7-17
7-10	California Pipe Flow Method	7-18
7-11	Open Flow Nozzle with Instream Transmitter	7-20
7-12	Determination of Waste Flow in Partially Filled Sewers	7-22
7-13	Three Common Types of Sharp-Crested Weirs	7-23
7-14	Profile of Sharp-Crested Weir	7-24
7-15	Weir Stilling Box	7-26
7-16	Nomograph for Capacity of Rectangular Weirs	7-28
7-17	Flow Rates for 60° and 90° V-Notch Weirs	7-30
7-18	Dimensions and Capacities of the Parshall Measuring Flume, for Various Throat Widths, W	7-32
7-19	Flow Curves for Parshall Flumes	7-33
7-20	Various Shapes of Palmer-Bowlus Flumes	7-35
7-21	Primary Device Flow Selection Chart	7-36
7-22	Hook Gauge	7-38
7-23	Air Bubbler for Measuring Water Depth	7-39
7-24	Floating Water Elevation Measuring Device	7-41

7-25	Recorder and Scow Float Used in Sewer Manhole	7-42
7-26	Pressure Sensor	7-43
7-27	Alignment Chart for Manning Formula for Pipe Flow	7-44
8-1	Chronological Variation in Influent BOD Concentration	8-4
8-2	Chronological Variation in BOD	8-6
8-3	Normal Probability Curve	8-7
8-4	Probability Plot of Graphical Method I	8-9
8-5	Probability Plot of Graphical Method II	8-13
8-6	Raw Data From Waste Survey for Tomato Processing Operation	8-17
8-7a	Probability of Occurrence of COD of Raw Tomato Waste	8-18
8-7b	Probability of Occurrence of BOD and Suspended Solids in Raw Waste	8-19
8-7c	Probability of Occurrence of Tomato Waste Loading	8-20
9-1	Continuous Water Sampling and Clarification System	9-3
9-2	Continuous Measurement of Turbidity	9-5
9-3	Elements of pH Control System	9-7
9-4	Continuous Chrome Treatment System	9-8
9-5	Dissolved Oxygen Probe System	9-9

LIST OF TABLES

Table No.		Page No.
3-1	Sampling Station Description	3-6
4-1	Significant Wastewater Parameters for Selected Industrial Classifications	4-2
4-2	Undesirable Characteristics of Industrial Wastewaters	4-8
5-1	Comparison of Oxygen Demand and Carbon Measurement Techniques	5-8
5-2	COD-TOC Relationships	5-11
5-3	Variation of COD/TOC and BOD_5/TOC Through Biological Treatment	5-12
6-1	Suggested Sampling or Compositing Schedule	6-4
6-2	Volume of Sample Required for Determination of the Various Constituents of Industrial Water	6-6
6-3	Recommended Storage Procedure	6-9
6-4	Sample Preservation	6-9
7-1	Discharge Coefficients for Pressure Tap-Orifices	7-6
7-2	Values of T for California Pipe Flow Formula	7-14
7-3	Values for W for California Pipe Flow Formula	7-15
7-4	Open Flow Nozzles - Dimension and Approximate Capacities	7-19
7-5	Practical Minimum Discharge for 90-Degree V-Notch Weirs	7-29
7-6	Head Losses in Weirs and Flumes	7-34
7-7	Ratios to Relate Flow in Sewers Flowing Full to Flow in Sewers Partly Full	7-45
7-8	Values of Effective Absolute Roughness and Friction Formula Coefficients	7-46
8-1	Summary of BOD Characterization Data	8-3
8-2	Solution of Graphical Method 1	8-10
8-3	Solution of Graphical Method 2	8-10
8-4	Values of Correlation Coefficient r for Two Variables	8-15
8-5	Flow and Material Balance for A Tomato Processing Operation	8-16
9-1	Data Lost by EPA in 629 Days	9-2

Chapter 1
INTRODUCTION

1.1 General

Industrial manufacturing processes of almost every type produce some quantities of waste materials. These products take the form of liquid, gaseous or solid residuals. In almost all cases, the indiscriminate disposal of these waste materials has a detrimental effect upon the environment.

The continued growth of American industry will undoubtedly require significant reductions in the amounts of waste pollutants now being discarded. The assimilative ability of our nation's air, water, and land resources is approaching the maximum; and further industrial expansion, or even continued operation at existing levels of pollution, could result in severe health and social degradation.

This manual is primarily concerned with liquid-borne wastes from industrial manufacturing operations. It is offered as a guide to the manufacturer in establishing a program for monitoring liquid wastestreams, and is intended to provide broad general direction and guidance to persons without prior training or experience. It will also bring into one volume information valuable as a reference and check-list source for those persons who are actively engaged in industrial pollution control programs. The manual covers the general waste characteristics of many industrial operations and discusses methods and procedures which can be applied to monitoring a majority of liquid-borne industrial effluents. It should also prove helpful to managers and supervisors of industrial operations whose basic function is manufacturing, but who now find a need for familiarization and understanding of the fundamental principles involved in a wastewater monitoring program.

This publication is part of an increasing effort of the Environmental Protection Agency to provide technical assistance for industry in solving their pollution problems. *It has not been prepared for regulatory purposes and is offered as helpful guidance only.* Regulations both at State and Federal levels will, however, require that monitoring be established as an integral part of any industrial waste control and treatment system.

This handbook is organized to include a general non-technical explanation for managers early in each chapter, followed by more detailed information for those involved in executing the monitoring program. All aspects of monitoring are covered in subsequent chapters; ranging from simple procedures through sophisticated automated systems.

1.2 The Need for a Monitoring Program

A waste monitoring program is desirable for the following reasons:

1. To assure responsible regulatory agencies of the manufacturers' compliance with effluent requirements and implementation schedule set forth in the discharge permit.

2. To maintain sufficient control of in-plant operations to prevent violations of permit specifications.

3. To develop necessary data for the design and operation of wastewater treatment facilities.

4. To insure cognizance of product and material losses to the sewer.

Under the permit system, the burden of monitoring a wastestream is placed upon the party creating the discharge, and regulatory agencies will monitor only as a check upon the accuracy of the reports of these dischargers.

The control of a waste system will normally require monitoring beyond that specified by the regulatory agencies, since the regulatory program will be primarily an overview function. Providing a system for preventing violations is the responsibility of the manufacturer. If the in-plant control system is carried out effectively there will be a minimum of regulatory involvement in plant production operations.

In addition to the legal requirements and the necessity of preventing violations, a good waste monitoring system can provide a check on the operation of manufacturing processes. Material losses or reduced performance of process equipment result in increased waste loads. Analysis of the wastestreams can often pinpoint malfunctions and result in prompt correction.

Another positive aspect of a good monitoring system is to provide protection for inaccurate accusations of illegal or harmful waste discharge practices. Adequate monitoring records can document that a facility was operating in conformance with permit requirements.

A waste monitoring system should become an integral portion of the manufacturing process and be used as a measure of efficient operation. Once incorporated into the production system, it will be an invaluable check on the overall efficiency of plant operations as well as an aid in meeting legal requirements. The monitoring program will also provide basic data that will be valuable in the design of a wastewater treatment system to meet regulatory requirements.

Chapter 2
PROGRAM PLANNING

2.1 Organizing the Program

2.1.1 Introduction

The basic steps involved in planning and implementing an effluent monitoring program are depicted in Figure 2-1. It is invariably found that the organization of a monitoring program is most economically approached by providing a capable staff to plan and initiate the program. The goal of this group is to arrive at the most practical continuing program which will assure compliance with permit requirements. Proper attention to planning is necessary for the establishment of an inexpensive, convenient and effective program which will not interfere with production operations. Since the program will be an integral part of the manufacturing process, the same attention should be given to its efficiency as is given to profitability and product quality control.

2.1.2 Outside Staffing

One of the initial decisions is the amount of reliance on outside assistance, such as consulting firms or laboratories, that will be required for the establishment and operation of the program. This decision is one which the manufacturer must make based upon his judgment of in-house capability and availability. If outside specialists are engaged, a representative of the manufacturer, experienced in plant operations, should be assigned to assist the consultants. This insures that the rationale and intent of their analysis and recommendations are compatible with process operations. This staff member will also be extremely valuable in presenting the program to the production and management staff and in obtaining the cooperation and assistance which will be necessary for a successful project.

2.1.3 In-House Staffing

As the monitoring program is being designed and implemented, it is essential that the project leader report at a high enough management level to guarantee that the production, analytical laboratory, and engineering functions will cooperate fully. When this is not done, the needs of the pollution control groups are often bypassed or given a low priority subservient to the pressures of daily operating problems. Because of the responsibilities of the plant manager in meeting the requirements of the permit, it is imperative that he take an active interest in the project.

The number of persons assigned to the team setting up the monitoring program varies widely among industries. Detailed staffing cannot be adequately discussed here. In any program, however, a thorough knowledge of the manufacturing facility, its operation, and the analytical techniques required for characterization of wastes are essential.

2.2 Cost Optimization

2.2.1 General

The basic objective of the monitoring program is to provide a characterization and understanding of the water-borne waste materials being produced by the manufacturing processes. Although regulatory agencies will only require monitoring of these wastestreams which leave the plant site, it is well established that a comprehensive monitoring program will locate inefficient and wasteful operations and lead to reduced manufacturing costs. In addition, in-plant monitoring is essential in detecting changes in process waste load in sufficient time to allow correction before violations occur.

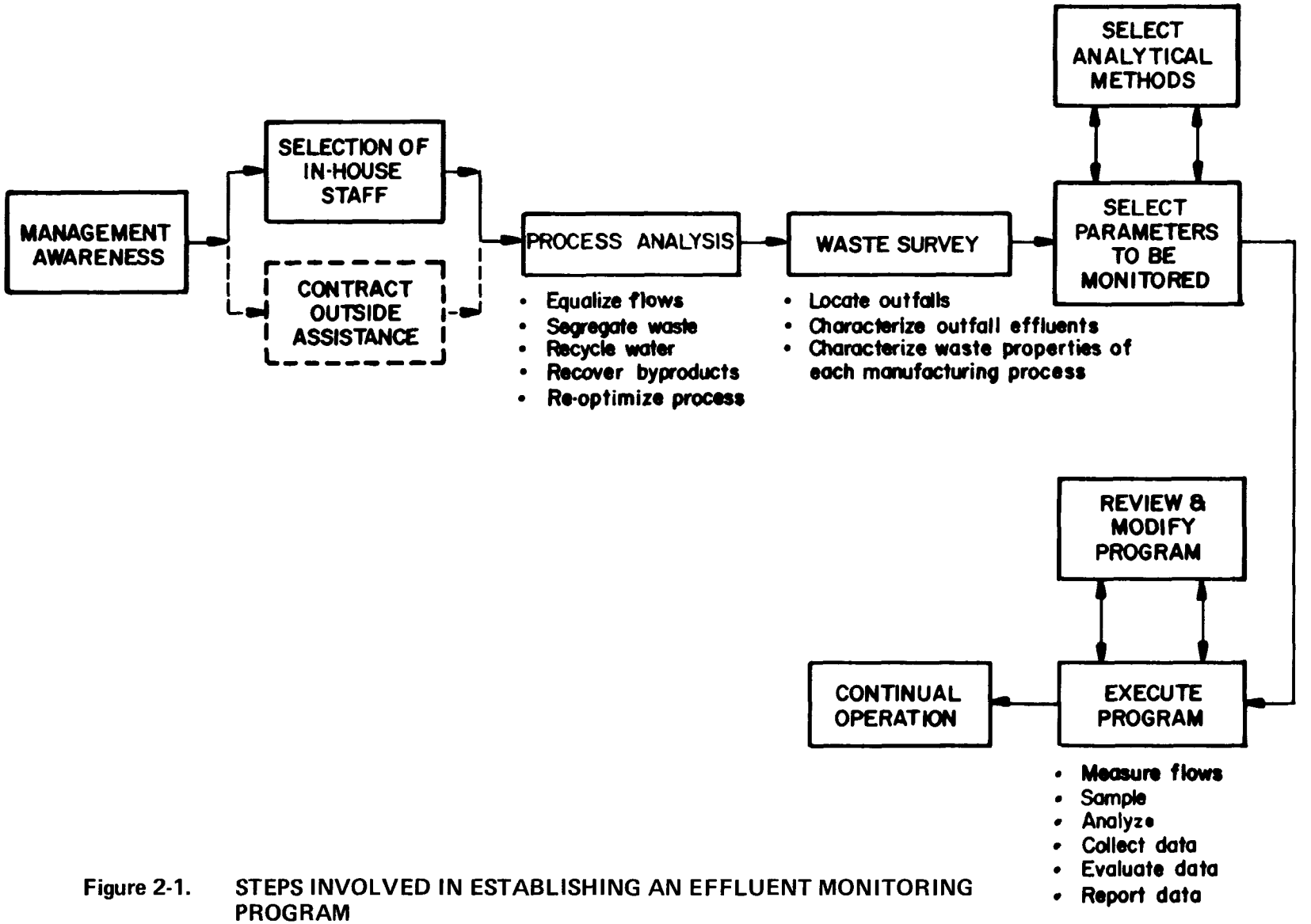

Figure 2-1. STEPS INVOLVED IN ESTABLISHING AN EFFLUENT MONITORING PROGRAM

In planning for monitoring needs, the same principles and process knowledge which lead to an efficient manufacturing process can be applied to the design of an optimum monitoring system. Such planning prior to the implementation of a monitoring program will optimize the cost effectiveness of the program while accomplishing its objectives. Knowledge is obtained by waste surveys which provide material balances of the waste products. To minimize the analytical costs and increase the effectiveness of any survey, it is essential to select the proper parameters for measurement. Although process analysis, waste surveys, analytical considerations, and choosing the proper parameters are discussed separately, in actual practice they will be closely knit together with each depending upon the other.

Most manufacturing facilities will be required to reduce their waste discharges in order to meet permit conditions. The monitoring system must therefore be designed to be compatible with projected production and waste treatment facilities. It is advisable to consider an in-plant monitoring system as a portion of a total abatement program and to be constantly alert for opportunities to minimize treatment costs while designing and implementing the monitoring program. Monitoring costs and treatment costs can be minimized by good waste management. Thus, adequate planning of the initial program will result in cost savings throughout the monitoring and treatment phases of an effective wastewater management program.

2.2.2 Process Analysis

In establishing a monitoring program, one of the first tasks should be an examination of the water usage and waste generation characteristics of the manufacturing process itself. Very often, a simple water conservation survey can eliminate unneeded water uses within the plant even before a formal monitoring program is initiated.

Chapter 3
THE WASTE SURVEY

3.1 Introduction

In conducting a monitoring program described in the previous chapter, existing knowledge of the waste flow is usually insufficient to provide the basis for good judgment. The waste survey provides a material balance of the flow of pollutants through a facility. Since the savings to be realized from the waste survey almost always exceeds the cost, the majority of industries will find that survey expenditures yield an excellent return.

The difficulty of locating sewer lines and establishing the manufacturing source responsible for wastes fed to each outfall becomes a time-consuming and complex problem in older facilities. Piping diagrams are seldom updated as changes are made over the years and these drawings must be accepted with this understanding and caution exercised in their use.

Location of all pertinent waste sources and characterization of the wastes being discharged is necessary. A detailed flow diagram will provide information on water usage and wastewater discharge. The total waste discharge can be approximated by summing the individual waste discharges at each operation.

The amount each manufacturing process contributes to each outfall must be determined. The quantity and quality of waste discharge at each location can be obtained by a mass balance of each production process. An up-to-date sewer map will be required to delineate the flow pattern of each process. A person cognizant of the physical facilities and manufacturing process should be assigned to assist in the location procedures. The techniques for determining flow contributions are varied, often requiring dye tracing and installation of additional sample points. It is essential that variations of flow with time be considered.

The completed waste survey will give a detailed picture of the waste generation within a facility. From this information the most promising areas for in-process abatement efforts can be determined. The information from the waste survey can be used to design the most economical waste treatment system as well as the most effective monitoring program.

3.2 Flow Sheet

This first consideration in the development of an industrial wastewater survey is a review of the entire production processes. A complete picture may be acquired by a material flow sheet of the entire plant, drawn in sufficient detail to include, for each operation, all raw materials, additives, end products, by-products, and liquid and solid wastes. Figure 3-1 is a typical flow diagram for tomato processing showing process lines, sewer layouts and sampling stations.

The flow sheet should indicate all primary discharges from each process, and the type and duration of each operation. The periods of discharge per day or week should be included showing production processes operated on a continuous basis and which have a continuous discharge of wastewater as opposed to batch type operations with periodic releases of wastewater. Intermittent discharges of wastewater are often very important sources of pollutants and should receive as much attention as primary waste producing operations.

A waste survey plan should consider seasonal and material variations, including time periods of peak pollution loads. The waste characterization should identify all important parameters which yield information effecting the sampling and testing techniques to be used, i.e., high concentrations or toxic levels. The requirements of a useful flow diagram can be summarized as follows (1):

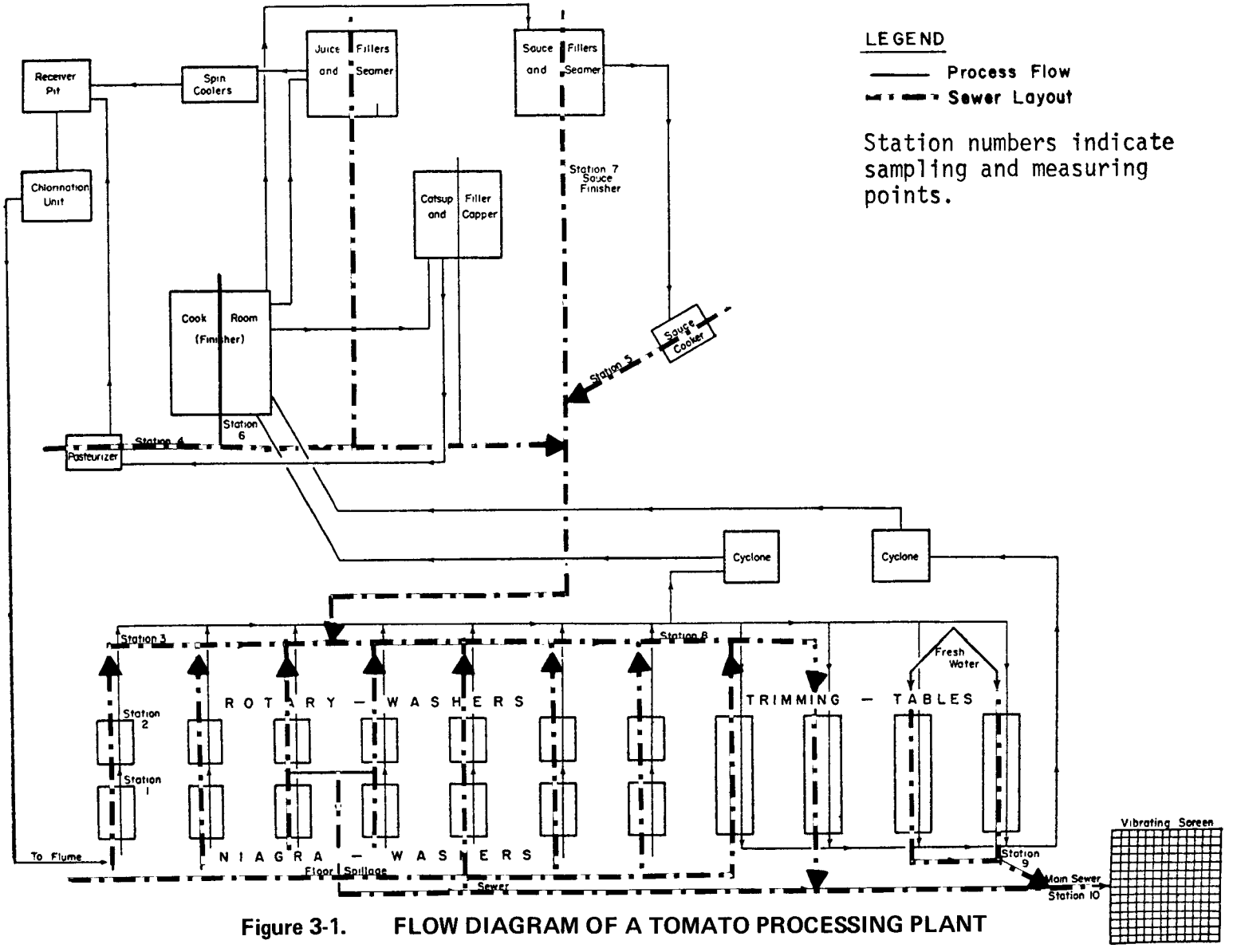

Figure 3-1. FLOW DIAGRAM OF A TOMATO PROCESSING PLANT

1. Detailed information concerning each production process should be given.

2. The type of operation should be identified as continuous, batch, or intermittent, with frequency of waste releases given for the batch and intermittent operations.

3. Raw materials, products and wastes should be listed.

4. The wastewater characteristics, such as flow, temperature, and pH, should also be included.

3.3 Mass Balance

Following the construction of a flow sheet, the next step is to define the amounts of raw materials, additives, products and wastes for each operation.

When the amounts of materials are known, it should be possible to establish a mass balance around each production process. From the materials balance the extent of solids and liquids waste characteristics may be determined. A materials balance for the entire plant will also indicate the amounts of wastes generated and may be obtained by substracting the amounts of materials shipped from the amounts purchased. This mass balance acts as a check on the waste quantities determined in the preliminary waste survey. It also allows preliminary estimates of flows and parameters to be measured.

3.4 Sewer Map

Of prime importance at this point is the development of an up-to-date sewer map showing water, wastewater, sanitary, storm and drain lines. The details of the map should be specific for pipe size, location and type of supply and drain connections to each processing unit, and direction of flow, with location of roof and floor drains, manholes, catch basins and control points defined.

In order to determine the sources of wastewater in sewers, it is frequently convenient to add a tracer to the wastewater in the outlet of a production unit. By plotting the flow of the tracer, it is possible to establish a sewer map. Commonly used tracers are dyes, floats, and smoke.

3.4.1 Dyes

Many different dyes are available as tracers, such as methyl orange, nigrosine, flourescein or rhodamine "B". The usual procedure is to add about 10 grams of powdered dye to a bucket of water, mix, then pour the fluid into the sewer at the source of the waste. The path of flow is determined by observing the dye at man holes and outlets. Methyl orange is red in acid solutions and yellow in alkaline solutions. Nigrosine imparts a black color to acid and alkaline wastes. Fluorescein sodium salt gives a brilliant green color in alkaline solution but gives no color in acid solution. Rhodamine "B" in high concentrations imparts a red color to the water but in low concentrations does not yield a visible color. It has the advantage, however, of being detected in extremely low concentrations by fluorometric techniques.

3.4.2 Floats

Wood chips, cork floats, stoppered bottles, oranges, etc., are all usable floats for the determination of the flow path in a sewer.

3.4.3 Smoke

Smoke is often useful in tracing in reverse. Smoke, released from a bomb at an outlet, can be traced back through the line to the production unit connected to it.

3.5 Location of Sampling Stations

After establishing a material flow sheet and a sewer map, location of the sampling stations should be determined. A desirable feature of the sampling station is that the flow be known. If the flow is not known, it may be estimated by use of a flow measurement device or other methods described in Chapter 7. Sufficient sampling stations should be established to determine the waste load at all of the major processes which contribute wastes.

Preliminary sampling throughout the plant should indicate the location and minimum number of sampling stations. Care must be taken not to overlook significant sources of pollution. Important factors to be considered in selecting the sampling station are:

1. The flow of the wastestream is known or can be estimated or measured.

2. The sampling station should be easily accessible with adequate safeguards.

3. The wastewater should be well mixed.

It is often convenient to combine a flow measurement station with a sampling station. When flumes are used for flow measuring, the sample is usually well mixed. When weirs are used, the wastewater is not necessarily well mixed since solids tend to settle and floating material passes over the weir.

Figure 3-2 presents an example of a sewer map which depicts the wastewater sampling stations for a complex petrochemical industry. A description of each sampling station is given in Table 3-1. Note that all major wastestreams are sampled.

When it is not possible to collect samples from a sewer line of a production unit, a mass balance around the point of discharge may give an indication of waste production of the particular process. Sampling stations may be located in the sewer upstream and downstream from an inaccessible discharge connection. Subsequently, a mass balance around the inaccessible discharge will allow an accurate estimation of the significant parameters of the production unit under investigation.

When a plant is proposing to discharge its wastewater into a municipal sewer, it is necessary that the discharge sewer or sewers have easy access for sampling. When a manhole is not available for sampling, one should be installed.

When sampling an industrial wastewater treatment plant, including pretreatment facilities, the quantity and quality of both the influent and effluent are of major importance in order to assess the performance of the complete system and to maintain compliance with the standards of regulatory agencies. However, to maintain consistent operation of the treatment facility, sampling should also be performed on the unit operations within the plant, such as the flow from a primary clarifier or an activated sludge process. The residual waste products, such as sludge, from a wastewater treatment plant, also must be monitored for quantity and quality.

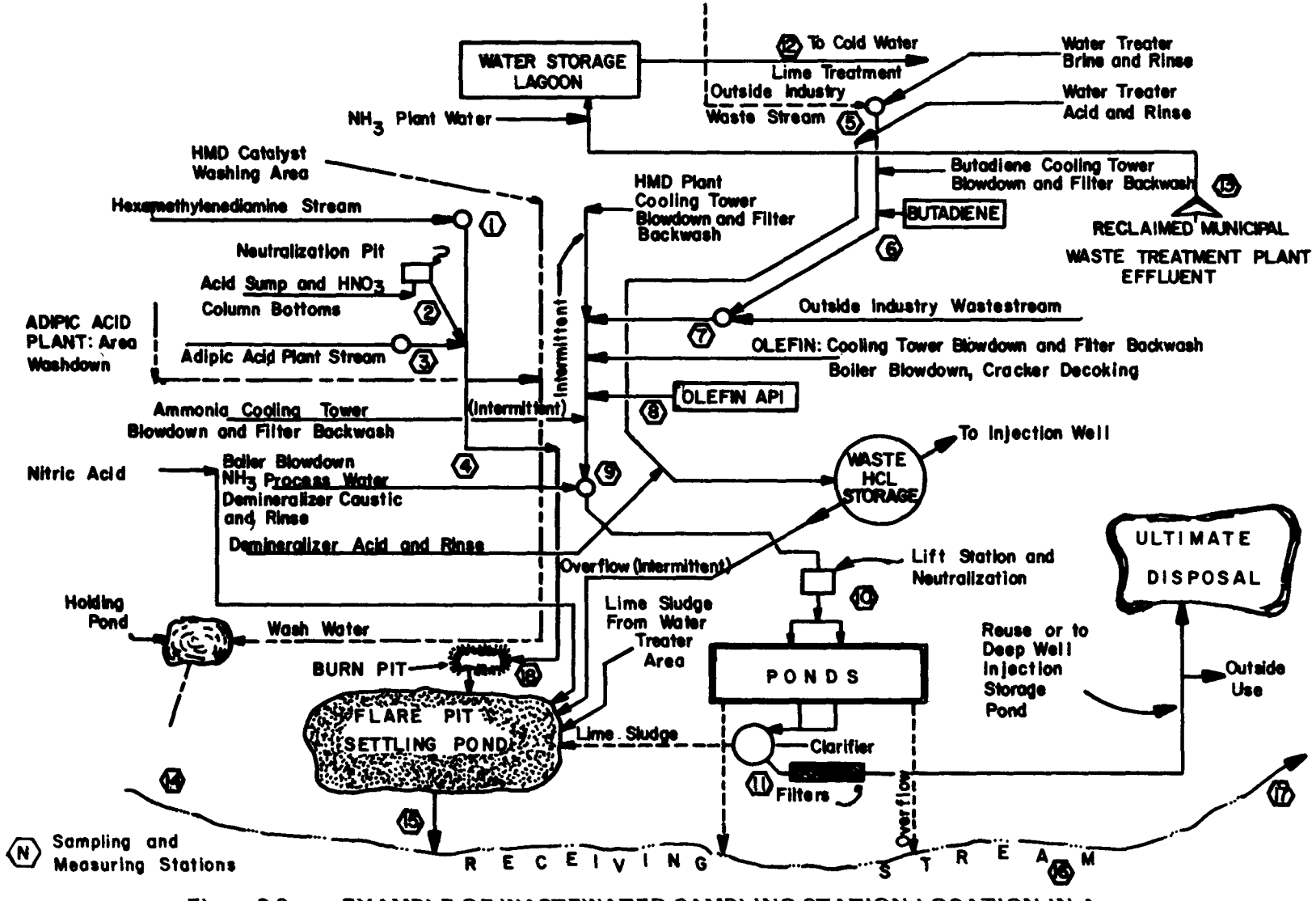

Figure 3-2. EXAMPLE OF WASTEWATER SAMPLING STATION LOCATION IN A COMPLEX PETROCHEMICAL INDUSTRY (2)

TABLE 3-1

SAMPLING STATION DESCRIPTION

Sampling Point Designation	Description
NETWORK "A"	
1	Hexamethylene diamine area
2	Acid sump and column bottoms (neutralization)
3	Adipic acid production area
4	Total network "A: flow (API Separator effluent)
NETWORK "B"	**(Butadiene, Olefin Production Area, Outside Industry Stream, Blowdown Cooling Stream, Miscellaneous Streams)**
5	Outside industry wastestream
6	Butadiene production area (API separator effluent)
7	Outside industry waste stream (manhole)
8	Olefin production area (API Separator effluent)
9	Four through Seven flow plus blowdown, ammonia process water
10	Total flow
11	Total flow
NETWORK "C"	**(Treated Sewage Effluent)**
12	Treated sewage effluent (sampling port)
13	Municipal treatment plant effluent
14	Catalyst washing area, surface runoff (open ditch)
15	Flare pit settling pond overflow
16	Upstream receiving water
17	Downstream receiving water
18	Nitric acid stream (sampled at Flare Pit Settling Pond)

3.6 Coordination with Production Staff

A wastewater survey may be considered a nuisance to some production staff members. Some manpower has to be allocated to the survey to install apparatus, and to report batch dumps, spills, etc. By providing the production staff with all available information about the details and necessity of the survey, a large part of the irritation can be prevented and a cooperative attitude expected. During the survey, it is important that the production staff recognize the necessity of maintaining a "normal" production schedule. No waste abatement measurements should be introduced during the survey by individual actions. Water spills, waste dumps and overflows should occur with the same frequency as would "normally" occur.

Personnel responsible for the wastewater survey should be relieved of all other assignments during the sampling program. The time intervals and other circumstances peculiar to the sampling procedure require constant attention of the individuals performing this task. When automatic samplers are installed, someone should be available to maintain the apparatus and replace the sample containers. When the plant operates on a continuous basis, the sample collection period should continue for 24 hours; otherwise, the sample collection should last as long as the plant operation, including plant clean-up. The production staff should inform the personnel assigned to the wastewater survey of the occurrence of wastewater dumps from batch and intermittent operations. Major spills should be reported and noted in order to enable a proper evaluation of the results from the wastewater survey.

3.7 References

1. Eckenfelder, W. W., *Water Quality Engineering for Practicing Engineers,* Barnes and Noble, Inc., New York, 1970.

2. Preliminary Investigational Requirements -- Petrochemical and Refinery Waste Treatment Facilities, Water Pollution Control Research Series 12020 EJD March, EPA, March 1971.

3.8 Additional Reading

1. Cooper, J. E., How Does Industry Make a Pollution and Waste Survey, Water and Sewage Works, 100, 195, 1953.

2. Eckenfelder, W. W., *Industrial Water Pollution Control,* McGraw Hill, 1966.

3. Planning and Making Industrial Waste Surveys, Ohio River Valley Water Sanitation Commission, April 1952.

4. Weston, R. F., et al., The Industrial Plant Waste Disposal Survey, Sewage Works Journal 21, 274, 1949.

Chapter 4
PARAMETERS TO BE MEASURED

4.1 Introduction

A major item in any monitoring system will be the costs for analytical measurements. There are several ways these charges may be minimized, yet meet all regulatory and in-plant requirements, the most important being proper selection of parameters to be monitored. Parameters which have significant pollution potential for selected industries are presented in Table 4-1.

The requirements for monitoring outfalls will be specified by the regulatory agency. Some of the necessary analyses will be time-consuming and relatively expensive. In many cases, the regulatory agencies will approve a substitution of a less expensive analytical technique if the parameter requiring the more expensive analysis can be accurately inferred from the simpler analysis. An example of this would be the substitution of COD (Chemical Oxygen Demand) analyses for a portion of the BOD_5 (5-day Biochemical Oxygen Demand) analyses if it can be shown that a satisfactory correlation exists between the two parameters. This will require discussion with the appropriate regulatory agency, but should not be overlooked.

For other than outfall monitoring, the selection of parameters is subject only to the requirement that the control be such that the effluent quality at the outfall is within the permit specifications. It is here that a strong effort should be made to find inexpensive analyses which can provide quick, accurate and correct information of those parameters requiring more expensive analytical techniques. Promptness of analysis is quite important since having the results for early action will greatly simplify control requirements. As an example, conductivity can sometimes be used as an indication of total dissolved solids. This is a simple measurement, and one which gives immediate results. It is absolutely necessary, however, to obtain a correlation between the rapid technique and the standard technique for a specific waste.

Another technique is the use of process measurements as an indication and warning of abnormal waste loads. Operator training in the effects of the manufacturing process on the waste system can often be more effective than an elaborate monitoring system maintained outside the manufacturing process itself. Thus, those variables in a process which can indicate an abnormally heavy waste load should be recognized and any variation in that direction used as a warning. A change in pH in a precipitation or chemical rinse tank, for example, may mean that an upset has occurred which will result in an increased waste load. If the production staff are trained to notify the waste treatment operators, prompt action may be taken to prevent serious consequences. High level alarms on tanks can warn of possible overflows to sewers.

The above discussion illustrates how processors can minimize their own in-plant monitoring costs. Naturally, the use of the substitution measurements must be approached with some caution and sufficient evidence of their effectiveness in measuring primary variables should be obtained. It must be stressed that the manufacturer will be responsible for the quality of discharged waste and that the use of in-plant controls which do not adequately reflect the primary parameters specified on the permit may result in violations.

4.2 Undesirable Waste Characteristics

Undesirable characteristics of industrial wastewater which may cause problems in surface waters, municipal sewers or treatment plants are summarized in Table 4-2 and discussed in detail in this section.

TABLE 4-1

SIGNIFICANT WASTEWATER PARAMETERS FOR SELECTED INDUSTRIAL CLASSIFICATIONS

	GROUP I[1]	GROUP II[2]
A.	**ALUMINUM INDUSTRY***	
	Suspended Solids	Total Dissolved Solids
	Free Chlorine	Phenol
	Fluoride	Aluminum
	Phosphorus	
	Oil and Grease	
	pH	
B.	**AUTOMOBILE INDUSTRY***	
	Suspended Solids	COD
	Oil and Grease	Chlorides
	BOD_5	Nitrate
	Chromium	Ammonia
	Phosphorus	Sulfate
	Cyanide	Tin
	Copper	Lead
	Nickel	Cadmium
	Iron	Total Dissolved Solids
	Zinc	
	Phenols	
C.	**BEET SUGAR PROCESSING INDUSTRY**	
	BOD_5	Alkalinity
	pH	Nitrogen, Total
	Suspended Solids	Temperature
	Settleable Solids	Total Dissolved Solids
	Total Coliforms	Color
	Oil and Grease	Turbidity
	Toxic Materials	Foam
D.	**BEVERAGE INDUSTRY**	
	BOD_5	Nitrogen
	pH	Phosphorus
	Suspended Solids	Temperature
	Settleable Solids	Total Dissolved Solids
	Total Coliforms	Color
	Oil and Grease	Turbidity
	Toxic Materials	Foam

E. CANNED AND PRESERVED FRUITS AND VEGETABLES INDUSTRY*

BOD_5	Color
COD	Fecal Coliforms
pH	Phosphorus, total
Suspended Solids	Temperature
	TOC
	Total Dissolved Solids

F. CONFINED LIVESTOCK FEEDING INDUSTRY*

BOD_5	Fecal Coliforms
COD	Nitrogen
Total Solids	Phosphate
pH	TOC

G. DAIRY INDUSTRY*

BOD_5	Chlorides
COD	Color
pH	Nitrogen
Suspended Solids	Phosphorus
	Temperature
	Total Organic Carbon
	Toxicity
	Turbidity

H. FERTILIZER INDUSTRY*

Nitrogen Fertilizer Industry

Ammonia	Calcium
Chloride	COD
Chromium, Total	Gas Purification Chemicals
Dissolved Solids	Iron, Total
Nitrate	Oil and Grease
Sulfate	pH
Suspended Solids	Phosphate
Urea & Other Organic Nitrogen Compounds	Sodium
Zinc	Temperature

Phosphate Fertilizer Industry

Calcium	Acidity
Dissolved Solids	Aluminum
Fluoride	Arsenic
pH	Iron
Phosphorus	Mercury
Suspended Solids	Nitrogen
Temperature	Sulfate
	Uranium

I. FLATGLASS, CEMENT, LIME, GYPSUM AND ASBESTOS INDUSTRIES

Flat Glass

COD
pH
Phosphorus
Sulfate
Suspended Solids
Temperature
BOD_5
Chromates
Zinc
Copper
Chromium
Iron
Tin
Silver
Nitrates
Organic and Inorganic Waterbreaking Chemicals
Synthetic Resins
Total Dissolved Solids

Cement, Concrete, Lime and Gypsum

COD
pH
Suspended Solids
Temperature
Alkalinity
Chromates
Phosphates
Zinc
Sulfite
Total Dissolved Solids

Asbestos

BOD_5
COD
pH
Suspended Solids
Chromates
Phosphates
Zinc
Sulfite
Total Dissolved Solids

J. GRAIN MILLING INDUSTRY*

BOD_5
Suspended Solids
Temperature
COD
pH
TOC
Total Dissolved Solids

K. INORGANIC CHEMICALS, ALKALIES AND CHLORINE INDUSTRY*

Acidity/Alkalinity
Total Solids
Total Suspended Solids
Total Dissolved Solids
Chlorides
Sulfates
BOD_5
COD
TOD
Chlorinated Benzenoids and Polynuclear Aromatics
Phenol
Fluoride

K. INORGANIC CHEMICALS, ALKALIES AND CHLORINE INDUSTRY* (Continued)

Silicates
Total Phosphorus
Cyanide
Mercury
Chromium
Lead
Titanium
Iron
Aluminum
Boron
Arsenic
Temperature

L. LEATHER TANNING AND FINISHING INDUSTRY*

BOD_5
COD
Chromium, Total
Grease
pH
Suspended Solids
Total Solids
Alkalinity
Color
Hardness
Nitrogen
Sodium Chloride
Temperature
Toxicity

M. MEAT PRODUCTS INDUSTRY

BOD_5
pH
Suspended Solids
Settleable Solids
Oil and Grease
Total Coliforms
Toxic Materials
Ammonia
Turbidity
Total Dissolved Solids
Phosphate
Color

N. METAL FINISHING INDUSTRY

COD
Oil and Grease
Heavy Metals
Suspended Solids
Cyanide

O. ORGANIC CHEMICALS INDUSTRY*

BOD_5
COD
pH
Total Suspended Solids
Total Dissolved Solids
Free - Floating Oil
TOC
Organic Chloride
Total Phosphorus
Heavy Metals
Phenol
Cyanides
Total Nitrogen
Other Pollutants

P. PETROLEUM REFINING INDUSTRY*

Ammonia
BOD_5
Chromium
COD
Oil, total
pH
Phenol
Sulfide
Suspended Solids
Temperature
Total Dissolved Solids
Chloride
Color
Copper
Cyanide
Iron
Lead
Mercaptans
Nitrogen
Odor
Total Phosphorus
Sulfate
TOC
Toxicity
Turbidity
Volatile Suspended Solids
Zinc

Q. PLASTIC MATERIALS AND SYNTHETICS INDUSTRY

BOD
COD
pH
Total Suspended Solids
Oil and Grease
Phenols
Total Dissolved Solids
Sulfates
Phosphorus
Nitrate
Organic Nitrogen
Ammonia
Cyanides
Toxic additives and materials
Chlorinated benzenoids and polynuclear aromatics
Zinc
Mercaptans

R. PULP AND PAPER INDUSTRY

BOD_5
COD
TOC
pH
Total Suspended Solids
Coliforms, total and fecal
Color
Heavy metals
Toxic materials
Turbidity
Ammonia
Oil and Grease
Phenols
Sulfite
Nutrients (nitrogen and phosphorus)
Total Dissolved Solids

S. STEAM GENERATION AND STEAM-ELECTRIC POWER GENERATION*

BOD_5
Chlorine
Chromate
Oil
pH
Phosphate
Suspended Solids
Temperature
Boron
Copper
Iron
Non-Degradable Organics
Total Dissolved Solids
Zinc

T. STEEL INDUSTRY

Oil and Grease
pH
Chloride
Sulfate
Ammonia
Cyanide
Phenol
Suspended Solids
Iron
Tin
Temperature
Chromium
Zinc

U. TEXTILE MILL PRODUCTS INDUSTRY

BOD_5
COD
pH
Suspended Solids
Chromium
Phenolics
Sulfide
Alkalinity
Heavy Metals
Color
Oil and Grease
Total Dissolved Solids
Sulfides
Temperature
Toxic Materials

*Guidlines for these industries not currently available at time of publication.

[1]**Group I consists of the most significant parameters for which effluent limits will most often be set.**

[2]**Group II consists of some additional parameters for which effluent limits can be set on an individual basis.**

TABLE 4-2

UNDESIRABLE CHARACTERISTICS OF INDUSTRIAL WASTEWATERS

1. Soluble organics causing dissolved oxygen depletion in streams and estuaries.
2. Soluble constituents that result in tastes and odors in water supplies.
3. Toxic materials and heavy metal ions.
4. Color and turbidity.
5. Nutrients--Nitrogen, Phosphorus and Carbon.
6. Refractory materials.
7. Oil, grease and immiscible liquids.
8. Acids and alkalies.
9. Substances resulting in atmospheric odors.
10. Suspended solids resulting in sludge deposits in streams.
11. Dissolved solids.
12. Temperature causing thermal pollution.
13. Radioactive material.
14. Pathogenic wastes.

4.2.1 Soluble Organics

Soluble, degradable organics cause utilization or depletion of dissolved oxygen by the activity of aerobic bacteria. Most industrial wastewaters contain some soluble organics. Examples are the waste liquors from pulp mills, canning plant wash effluents, meat packing wastes, textile scouring and dyeing effluents, milk product wastes and fermentation wastes. The quantity of soluble organics can be measured as BOD, COD, TOC (Total Organic Carbon), and TOD (Total Oxygen Demand). The measurement of these parameters and their interrelationship is discussed in Chapter 5.

4.2.2 Soluble Constituents that Produce Tastes and Odors

Tastes and odors may be associated with: 1) decaying organic matter; 2) living algae and other microscopic organisms containing essential oils and other odorous compounds; 3) iron and manganese and other metallic products of corrosion; 4) specific organic chemicals, such as phenols and mercaptans; 5) chlorine and its substitution compounds; and 6) biologically nondegradable synthetic organics.

Phenolics are a special nuisance in drinking water supply, particularly after chlorination, because of the very low concentrations (<2 ppb), which result in taste and odor detection. Petrochemical discharges and liquid wastes from the manufacture of synthetic rubber often cause taste and odor problems, e.g., sulfides cause odors in concentrations less than a few hundredths of a mg/1.

4.2.3 Toxic Materials and Heavy Ions

Examples of heavy metals are mercury, copper, zinc and lead. EPA is currently preparing a list of toxic materials which will be available in 1973.

For biological waste treatment plants, the maximum tolerable concentrations of toxic materials have been reported for many materials. Occasionally, treatability studies have to be made to determine the maximum allowable concentration of the toxic substance in a biological treatment system. In general, the threshold toxicity levels for biological treatment systems are higher than the allowable standards for surface waters. Establishing maximum concentrations for toxicants in biological treatment plants is useful only if the amount of toxicant is reduced during the treatment, as is the case with phenols. Often, it is necessary to decrease the concentration of the toxic material by pre-treatment. However, it is necessary to guard against the so-called synergistic effect of certain materials. One plant may be allowed to discharge zinc below the toxic level, while another plant may be allowed to do the same with copper. The resulting combination of both discharges will have a synergistic effect, and may cause biological deterioration in the receiving stream or the municipal treatment system.

Ammonia nitrogen is present in many natural waters in relatively low concentrations while industrial streams often contain exceedingly high concentrations of ammonia. Nitrogen in excess of 1600 mg/1 has proven to be inhibitory to many microorganisms present in the activated sludge basin. Sulfides are present in many wastewaters either as a mixture of HS^{-}-H_2S (depending on pH), sulfonated organic compounds, or metallic sulfides.

The influence of heavy metals on biological unit processes has been the subject of many investigations. Toxic thresholds for Cu, Zn, and Cd, have been established at approximately 1 mg/1.

4.2.4 Color and Turbidity

Color and turbidity present aesthetic problems. Low concentrations of compounds such as lignins and tannins will impart color to natural waters and may be intensified when combined with other materials. An example of this is iron and tannin which combine to form iron-tannate--a common base of blue-black ink.

It is possible to differentiate between the true and apparent color of a sample. True color is due to matter which is in true solution, while apparent color includes the effects of matter in the suspended and colloidal states as well. Examples of true color constituents are soluble dyes used in industry. Constituents which cause apparent color are usually finely divided metal hydroxide particles.

4.2.5 Nutrients--Nitrogen and Phosphorus

When effluents are discharged into lakes, ponds, and surface streams, the presence of nitrogen and phosphorus is particularly undesirable since it enhances eutrophication and stimulates undesirable algae growth. Industrial wastes containing insufficient nitrogen and phosphorus for biological development in waste treatment systems require addition of these nutrients in forms such as anhydrous ammonia and phosphoric acid.

The chemical form in which nutrients are present may differ and vary with the degree of treatment. Nitrogen can be present as ammonia, nitrate, nitrite and organic nitrogen in the form of proteins, urea and amino-acids. Phosphorus can be present as ortho phosphates (for example $Na_3(PO_3)_6$) or organic phosphorus.

4.2.6 Refractory Materials

Refractory materials are resistant to biodegradation and, thus, may be undesirable for certain water quality requirements. Alkyl benzene sulfonate (ABS) from detergents is substantially nondegradable and frequently causes a persistent foam in waste treatment systems and watercourses.

4.2.7 Oil, Grease and Immiscible Liquids

Oil, grease and immiscible liquids can produce unsightly conditions and in most cases the quantities permitted in wastewater are restricted by regulatory agencies. In sewer systems the presence of oils and immiscible liquids, such as naphthene and ether, may cause explosive conditions. Wastes from the meat-packing industry, particularly where fats are involved from the slaughtering of sheep and cattle, have resulted in serious decreases in the capacity of sewers. In treatment plants, wastewater with a high grease content may cause trouble with aerobic biological treatment.

The term, grease, applies to a wide variety of organic substances that may be extracted from aqueous solution or suspension by hexane. Hydrocarbons, esters, oils, fats, waxes, and high molecular weight fatty acids are the major materials dissolved by hexane. These materials have a "greasy feel" and are associated with problems in aerobic waste treatment.

Fats, oils, and waxes are esters. Fats and oils are esters of the trihydroxy alcohol, glycerol; while waxes are esters of long-chain monohydroxy alcohols. The glycerides of fatty acids that are liquid at ordinary temperatures are called oils and those that are solids are called fats. The term, oil, also represents a wide variety of substances ranging from low to high molecular weight hydrocarbons of mineral origin, spanning the range from gasoline through heavy fuel to lubricating oils.

It should be emphasized that oils and greases of vegetable and animal origin are generally biodegradable and, in an emulsified form, can be successfully treated by a biological treatment facility. On the other hand, oils and greases of mineral origin may be relatively resistant to biodegradation and will require removal by methods other than biological treatment. Unfortunately, a satisfactory method of distinguishing between oils and greases of vegetable and animal origin and those of mineral origin is not readily available.

4.2.8 Acids and Alkalies

The pH in a biological system, such as in surface water or treatment plants, is an important factor because a sudden change can cause serious damage. The measurement used to determine the required dosage of neutralizing agent, either $Ca(OH)_2$ or H_2SO_4, is termed acidity or alkalinity, respectively.

The acidity measures the capacity to donate protons. Acidity is attributible to the unionized portions of weakly mineral acids, hydrolizing salts and mineral acids. Mineral acids are probably the most significant group. It is difficult to predict neutralization requirements when diverse forms of mineral acidity are prevalent. Microbial systems may reduce acidity in some instances through biological degradation of organic acids.

Alkalinity, or the ability of wastewater to accept protons, is significant in the same general way as acidity, although the biological degradation process does offer some buffer capacity by furnishing carbon dioxide as a degradation end-product to the system. Alkalinity can be due to the presence of HCO_3^-, CO_3^{--}, or OH^-. It has been estimated that approximately 0.5 lb of alkalinity (as $CaCO_3$) is neutralized for each 1b of BOD removed. Excess alkalinity often has to be removed by neutralization.

4.2.9 Substances Resulting in Atmospheric Odors

Hydrogen sulfide and other volatile materials may create air pollution problems under appropriate environmental conditions. Typical examples are sulfides and mercaptans from tannery and kraft pulping operations.

4.2.10 Suspended Solids

Deposition of solids in quiescent stretches of a stream will impair the normal aquatic life of the stream. Sludge blankets containing organic solids will undergo progressive decomposition resulting in oxygen depletion and the production of noxious gases. Identical problems may result when excessive suspended solids are discharged into municipal sewer systems. Suspended solids are normally determined as an organic and an inorganic fraction. The organic fraction is generally distinguished as that portion which is volatilized or oxidized at 550℃.

4.2.11 Dissolved Solids

Many industrial wastes contain high concentrations of dissolved solids and these discharges into surface waters may limit the subsequent use of the stream as drinking or recreational waters. Conventional treatment of the wastewater has little effect on the dissolved solids content. Biological treatment systems are vulnerable to concentrations of salt above 10,000mg/1.

The concentration ratio of potassium plus sodium and calcium plus magnesium becomes of particular interest if the wastewater is to be used for spray rinsing. The tolerable amounts of sulfates in sewers is also limited because of their corrosive action on concrete and metal sewers as indicated by the following biochemical reaction:

$$SO_4 \xrightarrow{\text{anaerobic}} H_2S \xrightarrow{\text{aerobic}} H_2SO_4$$

4.2.12 Temperature

The addition of heat to surface waters may have deleterious effects. A temperature increase may cause a decrease in the waste assimilative ability of the surface waters. Discharge of heated water to a biological waste treatment plant may have an advantage since bacteria activity increases at higher temperatures with the optimum temperature usually between 30° and 37° C.

4.2.13 Radioactive Material

Radioactive materials can enter a sewerage system or surface waters due to the activities of nuclear reactors and by uranium ore mining and refining. Regulatory agencies have established standards for the maximum allowable concentrations of radioactive materials in surface waters.

It is possible to differentiate between the following three types of radioactivity:α, β, and γ rays. Alpha rays consist of a stream of particles of matter (doubly charged ions of helium with a mass of 4) projected at high speed from radioactive matter. Once emitted in air at room temperature, alpha particles do not travel much more than 10cm. These particles are stopped by an ordinary sheet of paper.

Beta rays consist of a stream of electrons moving at speeds ranging from 30 to 90 percent of the speed of light, their power of penetration varying with their speed. These particles normally travel several hundred feet in air and may be stopped with aluminum sheeting a few millimeters thick. Gamma rays are true electromagnetic radiations which travel with the speed of light, and are similar to x-rays but have shorter

wave lengths and greater penetrating power. Proper shielding from gamma rays requires several centimeters of lead or several feet of concrete. The unit of gamma radiation is the photon.

Radioactive materials commonly used in tracer studies in research in biology, chemistry and medicine are the isotopes of carbon (C^{14}) and iodine (I^{25}). In sewers and waste treatment plants certain isotopes, such as radioiodine and radiophosphorus, accumulate in biological slimes and sludges.

4.2.14 Pathogenic Wastes

Wastewaters that contain pathogenic bacteria can originate from livestock production (cattle, poultry, swine, lab animals), tanneries, pharmaceutical manufacturers and food processing industries. Pathogenic bacteria in wastewaters may be destroyed by the process of chlorination.

The bacteriological safety of a wastewater is normally measured by the number of fecal coliform bacteria present. Coliform bacteria are not pathogenic but are an indication of the probability that pathogenic bacteria are present. Examples of pathogenic bacteria are *Salmonella, Shigella, Leptospira* and *Vibrio.* To this group of undesirable pathogens also can be added the enteric viruses and parasites, such as *Endamoeba histolytica.*

4.3 Additional Reading

1. *Characterization and Treatment of Organic Industrial Wastes,* Training Manual, U. S. Department of the Interior, FWPCA, April, 1968.

2. *The Cost of Clean Water,* U. S. Department of the Interior, FWPCA, Vol. II, Detailed Analysis, 1968.

3. Eckenfelder, W. W., *Industrial Water Pollution Control,* McGraw - Hill Book Co., 1966.

4. Eckenfelder, W. W., *Water Quality Engineering for Practicing Engineers,* Barnes & Noble Inc., New York, 1970.

5. Environmental Protection Agency, Office of Water Programs, Division of Applied Technology, *The Industrial Wastes Studies Program Summary Reports on Industries.*

6. Manual on Disposal of *Refinery Wastes,* Volume on Liquid Wastes, American Petroleum Institute, 1969.

Chapter 5
ANALYTICAL CONSIDERATIONS

5.1 Introduction

Good analytical procedures are of the utmost importance in a monitoring program. The basic references for wastewater analytical procedures and techniques are the EPA Methods for Chemical Analysis of Water and Wastes, Standard Methods for Water and Wastewater Analysis, the EPA Handbook for Analytical Quality Control and the ASTM Standards listed as the first four references at the end of this chapter. These references should be consulted before beginning any analytical tests. It is the purpose of this chapter to discuss the basic principles of the tests only.

Figure 5-1 presents the overall scheme of wastewater analysis for monitoring purposes. Industries having extensive analytical capability will experience little difficulty in initiating analytical programs. Other industries may need assistance when difficulties arise in their analyses, and should obtain help from consultants, the EPA Technical Staff, or other manufacturers. This chapter will discuss analytical considerations that will give the reader familiarity with the more prevalent monitoring difficulties.

5.2 Analyses for Major Physical Characteristics

5.2.1 Temperature

Normally, the temperature of a sample is measured by using a dial type thermometer which is preferred for field work over the glass type because of its durability and ease of reading. For a wastewater survey where frequent readings are required, automatic temperature recorders may be used.

5.2.2 Electrical Conductivity

For monitoring a specific wastewater over a period of time, specific conductance is a useful parameter for approximating the total amount of inorganic dissolved solids. Conventional conductivity devices consist of two or more platinum electrodes separated by a test solution. The major disadvantage with this type of system is the possibility of polarization or poisoning (fouling) of the electrodes. Conductivity systems based on the measurement of inductance or capacitance are also available. The electrodes in these systems are isolated by a layer of glass, or other insulating material. The system response is less rapid, but the problems with fouling and polarization are eliminated.

If conductivity is being used as an indication of total dissolved solids, it is absolutely essential that a correlation be obtained for a specific waste. Otherwise, gross errors can be expected.

Temperature is very important when performing conductivity measurements. For example, the conductivity of sea water increases 3 percent/° C at 0° C, and only 2 percent/° C increase at 25° C. It is necessary to record temperature with conductivity measurements, or to adjust the temperature of the samples prior to making conductivity measurements. Conductivity is reported in micro-ohms.

5.2.3 Turbidity

In most cases turbidity in a water results from colloidal and suspended solids, the relationship of which should be established for each type of wastewater for the expected range of suspended solids.

Currently, the Hach Turbidimeter, Model 2100, is the only turbidity measuring device manufactured which meets the specifications adopted by the Environmental Protection Agency as a standard for turbidimeters (3).

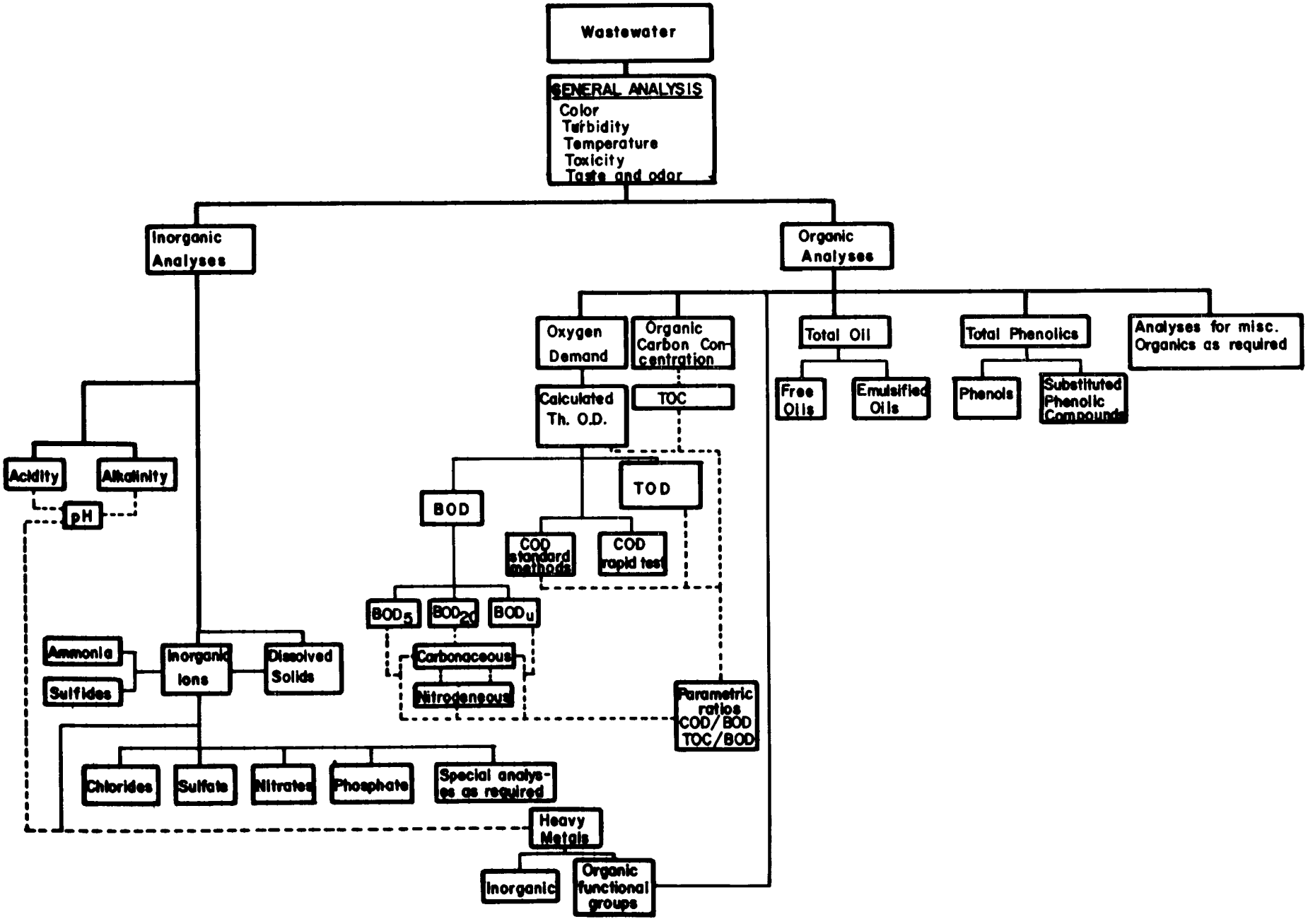

Figure 5-1. SCHEMATIC DIAGRAM OF WASTEWATER CHARACTERIZATION (6)

5.2.4 Solids

The general term "solids" usually is taken to mean the total solids content of the wastewater. In most instances, however, the specific form in which the solids are present in the wastewater needs to be determined. Therefore, methods are presented to differentiate between settleable solids, suspended solids, dissolved solids and volatile solids.

5.2.4.1 Settleable Solids

The term "settleable solids" applies to solids in suspension that will settle under quiescent conditions. Only the coarser suspended solids with a specific gravity greater than that of water will settle. The test for settleable solids is conducted in an Imhoff cone, allowing a one hour settling time. Samples should be at room temperature and the test conducted in a location away from direct sunlight. The settled solids volume is measured and reported in terms of milliliters of settleable solids per liter. The settleable solids test is important since it serves as the principal means to establish the need for and assist in the design of sedimentation facilities. This test is widely used in sewage and industrial waste treatment plant operation to determine the efficiency of sedimentation units.

5.2.4.2 Suspended Solids

Suspended solids represent the undissolved substances in the wastewater retained on a 0.45 micron filter. The residue retained on the filter is dried in an oven at 105° C. Non-homogenous particulate matter should be excluded from the sample. Analysis for suspended solids should begin as soon as possible since preservation of the sample is not practical.

The use of glass filters has increased considerably and these filters appear to give comparable results to the millipore filters. The glass fiber filters have one advantage over combustible materials, such as the millipore. Since the glass fibers are non-combustible at the temperatures used for determination of volatile suspended solids, the same crucible used for suspended solids determinations can be employed directly for determining volatile content. The combustible materials must be placed in a crucible and the final weight must be corrected to account for combustion of the filter.

5.2.4.3 Total Dissolved Solids

Total dissolved solids can be obtained by evaporating a sample of filtrate on a water bath. After the wastewater is evaporated, the dish is dried in an oven at a temperature of 105° C or 180° C. When total solids are measured, large floating particles should be removed from the sample. Oil and grease present in the sample should be included and dispersed by blending before evaporating.

Reference 2 mentions the possibility of drying the residue at 180° C instead of 105° C. Some materials, such as metallic hydroxides, will retain an associated water of hydration at 105° C, resulting in an apparent higher measurement of solids. At 180° C organic matter can be reduced by volatilization, but is not completely destroyed, some chloride and nitrate salts may be lost and bicarbonate may be converted to carbonate which may be partially decomposed to oxide or to basic salts. In general, waters containing considerable organic matter, or those with pH greater than 9, should be dried at the higher temperature. The report should indicate the drying temperature used in the analysis.

5.2.4.4 Volatile Solids

Volatile solids or that part of the solids consisting of organic materials, are measured by placing the filter with suspended solids, or the evaporation dish with total dissolved solids, in a 550 - 500° C furnace. The loss in weight of the total solids is reported as mg/l of volatile solids. This test is subject to many errors due to loss of water of crystallization, loss of volatile organic matter prior to combustion, incomplete oxidation of certain complex organics, and decomposition of mineral salts during combustion. By heating the total solids at 550° C the water of hydration evaporates and is included in the volatile matter. The temperature range between 550° C and 600° C is critical. At lower temperatures organic matter may not be oxidized at reasonable times, but the decomposition of inorganic salts is minimized. Ammonium compounds not released during drying are volatilized, but most other inorganic salts are relatively stable, with the exception of magnesium carbonate, as shown in the equation:

$$MgCO_3 \xrightarrow{350°C} MgO + CO_2\uparrow$$

Calcium carbonate, for example, is stable at temperatures up to 825° C.

The volatile suspended solids test is facilitated when glass fiber filters are used for the suspended solids determinations rather than a combustible filter material. However, the size of the respective particles must be checked to insure that they will be captured. It is desirable to compare the respective filters, e.g., glass fiber and millipore, for relative suspended solids capture efficiency prior to using the glass fiber media. The results of the volatile solids test should not be considered an accurate measure of the organic carbon in the sample, but rather, may be useful in estimations of wastewater characteristics and in the control of plant operations.

5.2.5 Oils, Greases and Immiscible Liquids

The quantitative measurement for greases, including oils, is based on solvent extraction by use of an organic solvent, such as hexane, petroleum ether, benzene, chloroform, freon, or carbon tetrachloride. After extraction, the solvent is distilled or evaporated under controlled temperature conditions until only "grease" remains in the container. The amount of grease remaining is weighed. This test is not specifically selective for immiscible oil and grease because organic matter in solution, such as phenols and organosulfur compounds, will also be measured. When it is desired to differentiate between volatile and non-volatile oily matter the sample is refluxed prior to extraction. The collected oily matter is measured volumetrically. For wastewaters, hexane is the most commonly used solvent and is applicable to the determination of relatively non-volatile hydrocarbons, animal fats and waxes, greases and other types of greasy-oily substances. The hexane extraction method is not applicable to wastewaters containing light hydrocarbons that volatilize at temperatures below 80° C. In order to include fatty acids, the samples are acidified prior to extraction.

Non-volatile oily material may be determined by flocculation of the wastewater with an iron salt, followed by extraction of the oily matter. The sample is first acidified to pH 4 and treated with an iron salt to form a flocculent ferric hydroxide precipitate. The floc is separated from the sample by filtration, extracted with ether, and then evaporated to remove the ether.

Since oils and greases of vegetable and animal origin are relatively biodegradable, as compared to oils of mineral origin, which must be removed by physical-chemical treatment methodology, it would be desirable to distinguish between the two forms of oils and greases. Unfortunately, a test is not currently available or accepted by regulatory authorities which allows this distinction.

5.2.6 Color

The color of wastewaters can be measured in the same way as the color of surface water from naturally occurring materials, such as leaves, barks, roots, humus and peat materials. Color is measured by comparing a sample of the wastewater with a series of standard solutions consisting of a mixture of K_2PtCl_2 and $CoCl_2$. The unit of color is that produced by 1 mg/l platinum in the form of the chloroplatinate ion. For field use, comparison is made with colored glass disks calibrated to correspond to a platinum cobalt scale. For specific color problems it is necessary to use the tri-stimulus method described in References 1 and 2.

5.2.7 Odor

Threshold odor is obtained by diluting samples with odor-free water. The dilution from which no odor can be determined is called the threshold odor number. Several people should be available for these tests as odor sensitivity varies widely with individuals. The person making the dilutions should not be used for the odor test as odor sensitivity is impaired for some time after exposure.

5.2.8 Radioactivity

Radioactivity is measured by counting the number of disintegrations per second. The unit of radioactivity is the curie which represents the number of disintegrations occurring per second (3.7×10^{10}) in one gram of pure radium. The curie represents such a large number of disintegrations per second that the millicurie (mc), 10^{-3} curie, and microcurie (μc), 10^{-6} curie, are more commonly used. Gamma radiation can also be expressed in terms of roentgen (r). The beta and gamma radioactivity of a sample is measured by a geiger counter. The internal proportional geiger counter is used to detect alpha activity. Radioactive measurements can be done on an automated basis.

Because the radioactivity in samples is often small and the concentration of the radionuclides is also low, care should be taken in sample collection to prevent loss of radioactive material to the sample container. It is often necessary to add a carrier material or chelating agent to the sample to minimize loss by adsorption to the walls of the container. Glass or plastic containers adsorb less radioactivity than metal ones. If it is desired to determine the radioactivity of suspended matter separately, it should be realized that a part of the alpha and beta activity is lost during sample preparation by self-adsorption.

Monitoring radioactivity can be very complex. Since only a relatively few manufacturers will be required to monitor radioactivity, further discussion is outside the scope of this manual. References 1 and 2 are recommended.

5.2.9 pH

The symbol, pH, is an abbreviation for the negative logarithm of the hydrogen ion concentration.

Values of pH in aqueous systems range from 0 to 14. Low pH values indicate acid conditions, high pH values indicate basic conditions. A solution with pH of 7 is considered neutral.

The pH of an aqueous solution is commonly determined by measuring the voltage between a measuring and reference electrode immersed in a solution. The measuring electrode, referred to as the glass electrode, is basically a closed glass tube with a membrane of specially formulated glass at one end which responds to hydrogen. To transmit the potential, representing pH, to a voltmeter, a stable reference electrode is similar in construction to the measuring electrode except for an opening exit which permits the internal electrolyte to flow or diffuse into the solution to be measured. This flowing electrolyte, in effect, constitutes a "liquid wire" which completes the electrical circuit.

It is possible to monitor the pH of a wastestream continuously; however, the apparatus for continuous monitoring should be calibrated at least once a week or oftener, depending on constituents in the waste which may influence performance of electrodes. For field determinations, portable pH meters are often used. Preferably, the pH samples should be measured as soon as possible after collection. Oil and grease may interfere with the readings by causing a sluggish response due to a coating of the electrodes. Both wide range (for pH between 0 and 14) and narrow range (2 - 3 pH units) paper is available. Because of the vulnerability of pH paper to interferences and influence from wastewater color, this technique cannot generally be used for accurate determinations.

5.2.10 Acidity

The acidity of a sample can be due to mineral acids or weak organic acids in solution. When mineral acids are present, the pH is usually lower than 4.

The measurement of acidity is performed by titrating the sample to pH 4.5 if mineral acidity has to be determined separately, or to pH 8.3 for total acidity. The pH values of 4.5 and 8.3 are recognized by color changes in the pH indicators, methyl orange and phenolpthalein, respectively. A meter is preferred for the determination of the pH values.

When heavy metal salts are present, it usually is desirable to heat the sample to boiling and then carry out the titration. The heat speeds the hydrolysis of the metal salts, allowing the titration to be completed more rapidly.

The titrant solution usually used is NaOH. The results of the acidity tests are expressed in mg/l as $CaCO_3$.

5.2.11 Alkalinity

The alkalinity of a sample may be caused by the presence of hydroxide, carbonate, and bicarbonate ions and salts of weak acids. The amount of these ions present is measured by titrating with H_2SO_4 to a pH 8.3 and pH 4.5. The phenolphthalein end point at pH 8.3 determines the amount of hydroxide and carbonate ions. At pH 8.3 all the carbonate ions are converted to bicarbonate ions, and all the hydroxide ions are neutralized. By titrating the pH to the methyl orange end point of 4.5, all bicarbonate is converted to carbonic acid. Figure 5-8 shows the principles of titration of samples containing various forms of alkalinity.

Samples for alkalinity should be analyzed as soon as possible after collection. Preferably, the sample bottles should not be opened before analysis. The results of the titration are reported in mg/l as equivalent $CaCO_3$.

5.2.12 Hardness

Hardness of a water is an important consideration in determining suitability of a water for domestic and industrial uses. Hardness is caused by divalent metallic cations. Those ions are capable of reacting with soap to form precipitates and with certain anions present in the water to form scale. By far the most important hardness-causing cations are Ca^{2+} and Mg^{2+}. However, cations like Fe^{2+}, Mn^{2+}, and Sr^{2+} contribute to hardness. Hardness is expressed as equivalent $CaCO_3$ in mg/l. It is rare however that a complete analysis is performed on a sample. A direct method to determine hardness is the EDTA (ethylene-diaminetetraacetic acid) titrimetric method. The EDTA molecule forms stable complex ions with divalent cations. The end point of the titration is determined with the indicator Erichromé Black T or calmagite. Interference is caused by excessive amounts of heavy metals and may be overcome by complexing the metals with cyanide. It is possible to measure the hardness on a continuous basis with an automated wet-chemical method, providing color, turbidity, and particulate matter are either removed or blanked out.

5.2.13 The Oxidation-Reduction Potential (ORP)

The oxidation-reduction potential is a measurement of the ratio of the concentrations of oxidized and reduced forms present in a wastewater. The electrode for measuring ORP consists of a nonreactive electrode immersed in a solution of ions in both reduced and oxidized form. An example would be a platinum wire immersed in a solution containing both ferrous and ferric ions. A calomel electrode is used as a reference electrode

Oxidation-reduction potentials are of interest to show the stoichiometric end point during the oxidation-reduction type of titrations. These measurements are also of interest in determining the degree of anaerobic (reducing) or aerobic (oxidizing) conditions which exist in a biological system. ORP control systems are useful for operational control of chromium and cyanide removal, but as a wastewater parameter they are of little value.

5.3 Nonspecific Analyses for Measuring Quantity of Organic Compounds

5.3.1 Biochemical Oxygen Demand

The biochemical oxygen demand analysis is an attempt to simulate the effect a waste will have on the dissolved oxygen of a stream by a laboratory test. It has been the most widely used method for estimating the strength of domestic or other biodegradable wastes. It must be applied with greater caution to many industrial wastes since the presence of certain compounds can inhibit the test. Although it is a useful measurement in characterizing industrial wastes, its use in monitoring is limited because of the 5 days required to run the test. It is expected, however, that BOD will continue to be a standard for regulatory agencies for many years. Therefore, an understanding of this parameter is essential.

The BOD test gives an indication of the amount of oxygen needed to stabilize or biologically oxidize the waste. The BOD test will measure the biodegradable organic carbon, and under certain conditions the oxidizable nitrogen present, in the waste. The measurement of oxidizable nitrogen may be avoided by adding inhibitors for the nitrifying bacteria. The ammonia content of the waste should be measured separately. Ammonia is also important to maintain the oxygen balance in the stream because, after the carbon has been oxidized, the nitrifying bacteria begin using oxygen (for 1 mg NH_4^+, bacteria need 4.56 mg 0_2) for oxidizing the ammonia. The advantage of the BOD test is that it measures only the organics which are oxidized by the bacteria. The disadvantage of the BOD test is the time lag between sampling and results of the analysis (5 days for BOD_5) and the difficulty in obtaining consistent repetitive values. It is possible that organics not degraded in a BOD bottle will be oxidized in an environment by bacteria which are acclimatized to that environment. Normally, the BOD bottle is not shaken and the CO_2 produced accumulates in the bottle. Both shaking and CO_2 accumulation influences the test results. A further disadvantage of BOD is the poor reproducibility of the test. The BOD of the same sample computed by two different laboratories seldom agrees within 10 percent.

Manometric methods used to determine BOD are more reproducible. The mixture is usually stirred and the CO_2 is adsorbed by a strong basic solution. A comparison of several methods of determining oxygen demand and carbon measurement techniques is given in Table 5-1. For individual BOD analyses, the BOD bottle method is the only economically feasible method. If BOD is to be continuously monitored, the use of the Hach type of apparatus of the electrolysis BOD device should be considered. The use of the Warburg apparatus is justified for research purposes but probably not for routine measurements of BOD.

TABLE 5-1

COMPARISON OF OXYGEN DEMAND AND CARBON MEASUREMENT TECHNIQUES

	Bottle	Hach	Warburg	TOC	COD
Equipment	Bottles, Incubator	Proprietary, Incubator	Constant Temp. Bath, Proprietary	Proprietary	Heaters, glassware
Time	5 days	1-5 days	1-5 days	Minutes	Hours
Type Measurement	Titration @ Intervals	Continuous manometric	Continuous manometric	Infra-red CO_2	Chemical Oxidation
Static or Dynamic	Static	Dynamic	Dynamic	N/A	N/A
CO_2 Absorbed by KOH	No	Yes	Yes	N/A	N/A
Cost (Approx.)	$150	$300	$4000	$8000	$500

5.3.2 Chemical Oxygen Demand (COD)

Most organics in a water sample may be oxidized by potassium dichromate in strong acid solution when refluxed for 2 hours. The amount of dichromate remaining is determined by titration with ferrous ammonium sulfate with ferroin as the indicator solution. Silver sulfate is added as a catalyst and, to eliminate chloride interference, mercuric sulfate is added. Sugars, branched and straight chain aliphatics, and substituted benzene rings are completely oxidized with little difficulty. However, some organic compounds, such as benzene, pyridine, and toluene are not oxidized by this method. Other compounds such as straight-chain acids, alcohols and amino acids can be completely oxidized in the presence of the silver sulfate catalyst.

Chloride concentrations greater than 500-1000 mg/1 may not be corrected by mercuric sulfate addition. A method of correction for high levels of chloride is to add the same concentration of chlorides to the blank samples as appears in the waste sample. Consequently, a chloride correction can be developed for the particular wastewater.

The results of the COD tests are usually higher than the corresponding BOD test for the following reasons:

1. Many organic compounds which are dichromate oxidizable are not biochemically oxidizable.

2. Certain inorganic substances, such as sulfides, sulfites, thiosulfates, nitrites and ferrous iron are oxidized by dichromate, creating an inorganic COD, which is misleading when estimating the organic content of the wastewater.

3. The BOD results may be affected by lack of seed acclimation, giving erroneously low readings. The COD results are independent of seed acclimation. Some aromatics and nitrogen are not oxidized by this method. The COD test may not include some volatile organics, such as acetic acid, readily available to river bacteria and include some organics, such as cellulose, that are not readily available to river bacteria.

5.3.3 Total Organic Carbon (TOC)

At temperatures greater than 950° C, all the carbon atoms of organic molecules will be oxidized to CO_2. The amount of CO_2 produced is measured by an infrared analyzer. The response of the analyzer is recorded on a strip chart. A correction to the detected amount of CO_2 has to be made for the inorganic carbon present in the sample. One apparatus has a low temperature combustion tube (T=150° C) in which the inorganic carbon vaporizes, and is detected in the infrared analyzer. A temperature of 150° C is too low for oxidation of organic molecules. The amount of inorganic carbon must be subtracted from the amount of CO_2 analyzed with the high temperature combustion tube. Another method to correct for the inorganic carbon is by acidification of the sample and purging N_2 gas through the samples to gas strip all the inorganic carbon. Error may be introduced into the analysis if volatile organics are present since these materials may be stripped along with the carbon dioxide. The amount of strippable organics can be determined with a diffusion cell and the organic carbon results can be corrected accordingly (5). The organic carbon determination lacks the many variables which plague the COD and BOD analyses, resulting in more reliable and reproducible data. Once the apparatus is calibrated, the tests are completed in a few minutes. Some interference is possible if anions of NO_3, Cl, SO_4, and PO_4 are present in excess of 10,000 mg/1. Industrial wastewaters containing similar anion concentrations should be diluted with carbon dioxide-free water prior to analysis. The reproducibility of the test results is greatly influenced by particulate matter present in the sample.

5.3.4 The Total Oxygen Demand (TOD)

The total oxygen demand (TOD) measures the oxygen demand of a sample rather than its carbon content. The measurement is obtained by a continuous monitoring of the oxygen concentration present in a nitrogen carrier gas. This gas flows through a platinum-catalyzed combustion chamber, where the oxidizable constituents of the sample are converted to stable oxides. Oxygen, as the carrier gas, regenerates the catalytic surface which temporarily disturbs the oxygen equilibrium of the catalyst. This depletion of oxygen is measured in an electrolytic detector cell and is directly related to the oxygen demand of the sample. The total oxygen demand of a substance measured by this type of analyzer may include both organic and inorganic substances, but varying reaction efficiencies. The probable chemical reactions that occur in the apparatus are as follows:

1. Carbon is converted to carbon dioxide.
2. Hydrogen is converted to water.
3. Nitrogen, in a 3-valence state, is converted to nitric oxide.
4. The sulfite ion is partially converted to sulfate.
5. The sulfide ion is partially converted to sulfate.

TOD has its greatest potential where NO_3,SO_4,NH_3 and dissolved oxygen are not predominant.

5.3.5 Relationships Between BOD, COD, and TOC

When considering routine plant monitoring of a wastewater characterization program, BOD is not the most useful test of waste load because of the long incubation time required to obtain a meaningful result. It is therefore important to develop a correlation between BOD, COD, TOC, etc. Once the correlation has been established, the TOC or COD measurements can be translated in terms of BOD.

In attempting to correlate BOD or COD of an industrial waste with TOC, one should recognize those factors which might constrain or discredit the correlation. These limitations include:

1. A portion of the COD of many industrial wastes is attributed to the dichromate oxidation of ferrous iron, nitrogen, sulfites, sulfides, and other oxygen consuming inorganics; the TOC analysis does not include oxidation of these compounds.

2. The BOD and COD tests do not include many organic compounds which are partially or totally resistant to biochemical or dichromate oxidation. However, the organic carbon in these compounds is recovered in the TOC analysis.

3. The BOD test is susceptible to variables which include seed acclimation, dilution, temperature, pH, and toxic substances. The COD and TOC tests are independent of these variables.

One can expect the stoichiometric COD/TOC ratio of a wastewater to range from zero, when the organic material is resistant to dichromate oxidation, to 5.33 for methane or slightly higher when inorganic reducing agents are present. The BOD/COD ratio of an industrial waste would be subject to many of the aforementioned variables and could not be expected to follow any particular pattern. This is emphasized by the variability between the calculated and measured COD/TOC values for various compounds as shown in Table 5-2.

TABLE 5-2

COD-TOC RELATIONSHIPS

Substance	COD/TOC (Calculated)	COD/TOC (Measured)
Acetone	3.56	2.44
Ethanol	4.00	3.35
Phenol	3.12	2.96
Benzene	3.34	0.84
Pyridine	3.33	nil
Salicylic Acid	2.86	2.83
Methanol	4.00	3.89
Benzoic Acid	2.86	2.90
Sucrose	2.67	2.44

This variability is attributed to the COD yield of the compounds, and wastestreams containing a portion of these substances would be subjected to a fluctuating COD/TOC ratio in the event of component concentration changes. The greater the variability in the character of an industrial wastestream, the more pronounced will be the change in its COD/TOC ratio. This in itself is a good indicator of the degree of consistency of wastewater constituents, and can be a valuable aid in predicting the design organic load applied to a biological treatment facility.

Although relatively good correlation has been obtained for domestic wastewaters, difficulty has been experienced in correlating the BOD and TOC for industrial wastes. This is reasonable due to the complexity and diversity of industrial wastes. The reported BOD yields for industrial wastewaters are often erratic and highly dependent on the previously mentioned variables.

A decrease in the ratios of COD/TOC and of BOD_5/COD has been observed during the biological oxidation of both municipal and industrial wastewaters as shown in Table 5-3. This decrease can be attributed to:

1. The presence of inorganic reducing substances that would be oxidized in the biological process, thereby reducing the COD/TOC ratio.

2. Intermediate compounds may be formed during the biological process without significant conversion of organic matter to carbon dioxide. A reduction in COD may not be accompanied by a reduction in TOC.

3. The BOD reaction rate, k, will be greater than 0.15 in the raw waste and less than 0.1 in the treated effluent. The BOD_5/BOD_u, and hence BOD_5/COD ratio, depends on this rate. The changing k rate is partially responsible for the reduction in the BOD_5/COD or BOD_5/TOC during biological oxidation.

4. The concentration of non-degradable refractory materials will account for a larger portion of the COD in the effluent than in the raw waste, thereby lowering the BOD_5/COD or the BOD_5/TOC ratio.

TABLE 5-3

VARIATION OF COD/TOC AND BOD_5/TOC THROUGH BIOLOGICAL TREATMENT

Waste	COD/TOC		BOD_5/TOC	
	Raw	Effluent	Raw	Effluent
Domestic	4.15	2.20	1.62	0.47
Chemical	3.54	2.29	-	-
Refinery - chemical	5.40	2.15	2.75	0.43
Petrochemical	2.70	1.85	-	-

In summary, it is evident that the TOC is a valid indication of biological oxygen demand and can be correlated to COD values in many applications. These tests are extremely good control parameters because of the abbreviated analysis time associated with the respective analyzers. It is less probable that TOD, TOC, or COD can be correlated to BOD unless the constituents in the wastewater remain relatively constant. The conjunctive use of these parameters in terms of BOD, COD, TOD, and TOC ratios can be helpful in properly evaluating the organic nature of a wastewater.

5.4 Specific analysis for Organic Compounds

For most wastewater surveys an entire delineation of all organic compounds present is seldom necessary. Only when specific organic compounds have toxic effects or when regulatory agencies set specific standards are specific analyses necessary. The 1972 clean water legislation requires that EPA prepare a list of specific compounds which are considered toxic. (This list is not available at the time of printing of this manual but should be completed in 1973.) Analytical methods for many organic compounds are available but are usually very difficult to perform. The concentration of the organic compound of interest is often too small for a direct and accurate identification. Prior to detection of the compound, the organic constituent has to be increased by concentration techniques. Concentration by removal of water can be done by evaporating or freezing. Freezing is recommended when the loss of volatile constituents is a potential, or the nature of the specific organic substances of interest may be altered.

5.5 Analysis for Inorganic Anions

Details for the analysis of most inorganic anions can be found in References 1 and 2. The analyses are often based on titrimetric, colorimetric methods (4). Chloride, for example , can be titrated with mercuric nitrate since it forms the slightly dissociated mercuric chloride. The end point of the titration is indicated by diphenyl-carbazone, having a color of blue-violet in the presence of excess mercury. Fluoride can be measured colorimetrically by adding SPADNS reagent. Sulfate is an anion which can be measured gravimetrically. For each test one has to be aware of possible interferences with the test due to the presence of certain constituents. References 1 and 2 indicate the most common interferences and suggest methods of elimination.

5.6 Analysis for Dissolved Oxygen

The dissolved oxygen (DO) concentration is of primary importance in surface waters and for wastewater treatment plant control. For wastewater characterization, the DO is of limited value. However, it is necessary to determine DO levels in the diluted samples of the BOD test.

Two important tests for DO are the Winkler (iodometric method) and the membrane electrode method as described in References 1 and 2.

The Winkler method, with or without azide modification, should not be used under the following conditions:

1. Samples containing sulfite, thiosulfate, polythionate, or appreciable quantities of free chlorine or hypochlorite.

2. Samples high in suspended solids.

3. Samples containing organic substances which are readily oxidized in a highly alkaline solution, or which are oxidized by free iodine in an acid solution.

4. Biological Flocs.

5. When sample color interferes with end point detection.

In all of the above cases, and when a high number of samples have to be analyzed, the DO probe should be used. Membrane electrodes of the polarographic, as well as the galvanic, type have been used for DO measurements and for the automatic monitoring of surface waters and industrial effluents.

5.7 Analysis for Phosphorus and Nitrogen Compounds

Phosphorus and nitrogen can be present in several chemical forms in wastewaters. Phosphorus is usually present as phosphate, polyphosphate (molecular dehydrated forms of phosphates) and organically-bound phosphorus. Polyphosphates are rapidly hydrolized into orthophosphate in boiling water at low pH. Organic forms of phosphorus are converted to orthophosphates by wet oxidation. The phosphate concentration is measured colorimetrically.

The nitrogen compounds of interest in wastewater characterization are ammonia, nitrite, nitrate and organic nitrogen. Ammonia is distilled from the sample at an alkaline pH into an acid solution. The ammonia in the distillate can be determined either colorimetrically by nesslerization or titrimetrically with standard sulfuric acid (1). Organic nitrogen may be determined by acidic digestion of the sample. If the ammonia originally present in the sample is not removed, total Kjeldahl nitrogen is measured, which includes ammonia and organic nitrogen, but does not include nitrate and nitrite nitrogen. Nitrate and nitrite are measured colorimetrically. Details for these analyses can be found in References 1 and 2.

5.8 Analysis for Pathogenic Bacteria

The detection of coliform bacteria in wastewaters is considered to be an indication of the possibility of pathogenic bacteria being present. The test for coliform bacteria is comparatively simple and easy to perform on a routine basis. There are two standard presumptive tests for coliform bacteria. The multiple-tube fermentation technique employs serial dilutions of a sample in lactose broth. For each dilution, 5 tubes should be inoculated, with at least 3 dilutions for each sample. If gas is formed within 24 or 48 hours at an incubation temperature of 35° C, the test is considered to be positive. The number of positive tubes in the last three dilutions is considered to be a measurement of the number of coliform bacteria present. Another technique consists of filtering a sample, or a sample dilution, through a membrane filter. The filter is then transferred to an Endo-type medium containing lactose. Typical colonies with a metallic sheen which develop within 24 hours at 35° C are considered to be caused by coliform bacteria. The membrane filter technique is very convenient but is not practical for wastewaters with a high suspended solids content. Fecal coliform is now considered the better indicator for pathogenic bacteria. For further details see Reference 2.

5.9 Estimating the Amount of Pollutants Present by Use of "Kits"

Companies, such as the Hach Chemical Company, Delta Scientific, Inc., and Koslow Scientific Company, have manufactured "Kits" for the analysis of various constituents of wastewater. The kits consist of a small portable container in which all the necessary equipment and instructions are conveniently packaged and arranged to perform a variety of tests. No previous laboratory training is required and, within minutes, an indication of the chemical constituents in wastewater can be determined. Koslow Scientific and the Hach Company provide kits for determining the presence of heavy metals, such as Cd, Hg and Pb, and includes reagents for masking interferences.

The major disadvantage in using kits is the inability of the pre-packaged devices and reagents to effectively cope with interferences. Reference 2 outlines procedures for the removal of interferences by pretreatment techniques and the reagents necessary for masking these interferences that are usually not available in the kits. The accuracy of the tests performed with kits is usually less than that obtainable with precise laboratory techniques. Kits give good results in relatively clean water but pose problems when used to analyze wastewaters. They are nevertheless useful in preliminary surveys performed to determine overall characteristics of a wastewater.

5.10 Selective Ion Electrodes

During the last decade, selective ion electrodes have been widely used for the detection of wastewater constituents. Reference 3 contains basic guidance in using these electrodes.

5.11 Automated Wet Chemistry

Automated wet chemistry is frequently used in the analysis of wastewaters and for automated monitoring of waste effluents. When used, the system consists of a sampler to select air, reagents, diluents and filtered samples. From the sampler, the fluids pass through a proportioning pump and manifold where the fluids are apsirated, proportioned and mixed. The samples are then ready for separation by passing through any one of the following units: a dialyzer (continuously separates interfering materials in the reaction mixture), a digester (used for digestion, distillation or solvent evaporation), a continuous filter (for on-stream separation of particulate matter by a moving belt of filter paper), or a distillation head (separates high vapor pressure components).

After separation, the samples can be conditioned in a constant temperature heating bath. After conditioning, the samples pass through a detection system which may be a colorimeter, a flame photometer, a fluorometer, a UV spectrophotometer, an IR spectrophotometer, an atomic absorption spectrophotometer, or a dual differential colorimeter. The signals from the detection system are sent to a recorder or a computer system.

5.12 Bioassay Tests

Bioassay tests are sometimes used to detect general toxicity of wastes. The useful performance of these tests require specialized knowledge beyond the scope of this manual. The reader is directed to References 7, 8, 9, and 10 for further information.

5.13 Cost of Wastewater Analyses

The cost for laboratory services will vary from place to place, and the unit costs are normally dependent upon the number of analyses requested. Special discounts are normally available for contract where a large number of samples are submitted for analysis.

5.14 References

1. *Methods for Chemical Analysis of Water and Wastes, E.P.A.,* 16020-07/71, 1971.

2. *Standard Methods for the Examination of Water and Waste Water,* 13th Edition, American Public Health Association, 1971.

3. *Handbook for Analytical Quality Control in Water and Waste Water Laboratories,* U. S. Environmental Protection Agency, Technology Transfer, June, 1972.

4. *AS&M Standards,* Industrial Water; Atmospheric Analysis, Part 23, October 1967.

5. Sawyer, C. N., and McCarty, P. L., *Chemistry for Sanitary Engineers,* McGraw-Hill, 1967.

6. Eckenfelder, W. W., and Ford, D. L., *Water Pollution Control, Experimental Procedures for Process Design,* Pemberton Press, Jenkins Publishing Company, 1970.

7. Eckenfelder, W. W.,*et al,* Toxicity of Industrial Wastes to Aquatic Organisms, Chapter 1 in *Water Resource Management Series, Volume 1, Manual of Treatment Processes,* Environmental Science Service Corporation, 1968.

8. Korzep, D. A., *Toxicity of Organic Compounds,* Thesis, The University of Texas, Austin, 1962.

9. Malina, J. F., Jr., "Toxicity of Petrochemicals in the Aquatic Environment," *Water and Sewage Works,* pp. 456-460, October, 1964.

10. Malina, J. F., et al, *Vol I Analytical Procedures and Methods,* Poland Project 26 for World Health Organization, University of Texas at Austin, 1967.

5.15 Additional Reading

1. Andelman, J. B.., "Ion-selective Electrodes - Theory and Applications in Water Analysis", JWPCF, 40: 1844, November, 1968.

2. Hach, C. C., Understanding Turbidity Measurement, *Industrial Waste Engineering,* February/March, 1972.

3. Durst, R. A., Editor, *Ion-Selective Electrodes,* Proceedings of a Symposium Held at National Bureau of Standards, Gaithersburg, Maryland, 1969.

4. Mancy, K. H., *Instrumental Analysis for Water Pollution Control* Ann Arbor Science Publishers Inc., 1971.

5. Mancy, K. H., and Weber, W. J., Jr., *Analysis of Industrial Waste Waters,* Wiley Interscience, New York, 1971.

6. Mohlman, F. W., and Edwards, C. P., *Ind. Eng. Chem., Anal. Ed., 3:* 119, 1931.

7. Orion Research, *Analytical Methods Guide,* Third Edition, May, 1972.

8. Wuhrmann, K., Hauptwirkungen and Wechselwirkungen Einige Betriebs, *Parameter in Belebtschlamm System,* Ergebnisse Mehyahriger Grossversuche Vortag, Zurich, 1964.

9. Jungck, P. R., and E. T. Waylowich "Practical pH Control, *Industrial Water Engineering,* February/March 1972.

10. Morgan, B. GG. and J. B. Lackey, "BOD Determination is Wastes Containing Cheleated Copper and Chromium", *Sewage Industrial Wastes* 30, No. 3, 293, 1958.

11. Jeris, J. S., "A Rapid COD Test Water Wastes", Eng. 5., No. 4, 89, 1967.

12. Krenkel, P. A., editor; *Proceedings of the Specialty Conference* on Automatic Water Quality Monitoring in Europe, Technical report No. 28, Department of Environmental and Water Resources Engineering, Vanderbilt University, 1971.

13. Eckenfelder, W. W., *Water Quality Engineering for Practicing Engineers,* Barnes & Noble Inc., New York, 1970.

14. Eynon, J. U., "Known Increment and Known Decrement Methods of Measurement with Ion Selective Electrodes", *American Laboraatory, 64;* 59, September, 1970.

15. Ford, D. L., "Application of the Total Carbon Analyses for Industrial Wastewater Evaluation", *Proc. 23rd Industrial Waste Conference,* Purdue University, p. 989, 1968.

16. Laboratory Analyses for Treatment Plant Operators, *Training Course Manual,* U. S. Department of the Interior, FWPCA, April, 1968.

17. Pickering, Q. H., and C. Henderson, "The Acute Toxicity of Some Heavy Metals to Different Species of Warm Water Fish", *Proceedings 19th Industrial Waste Conference,* Purdue University, Lafayette, Indiana, 578, 1964.

18. Riseman, J. W., "Specific Ion Electrodes - Versatile New Analytical Tools", *Industrial Wastes,* Page 12, September/October, 1970.

19. Turnbull, H., et al, "Toxicity of Various Refinery Materials to Fresh Water Fish", *Ind. and Eng. Chem., 46:* 324, No. 2, February, 1954.

20. Weber, S. J., "Specific Ion Electrodes in Pollution Control", *American Laboratory,* 22: 15, July, 1970.

5.16 List of Some Manufacturers of Analytical Apparatus and Control Systems

1. Aquatronics Inc., 4th & Cumberland Streets, Philadelphia, Pa. 19133

2. Automated Environmental Systems, Inc., 135 Crossways Park Drive, Woodbury, Long Island, New York 11797

3. Beckmann Instruments Inc., Fullerton, California 92634

4. Biospherics Incorporated, 4928 Wyaconda Road, Rockville, Maryland 20852

5. Delta Scientific, 120 E. Hoffman Avenue, Lindenhurst, N. Y. 11757

6. DuPont Company, Wilmington, Delaware 19898

7. Ecologic Instrument Corporation, 597 Old Willetts Path, Hayppauge, New York, 10017
8. Enviro Control Inc., 2250 Connecticut Avenue, N. W., Washington, D. C. 20036
9. Foxboro Company, Neponset Avenue, Foxboro, Massachusetts 02035
10 Great Lakes Instruments Inc., 7552 North Teutonia Avenue, Milwaukee, Wisconsin 53209
11. Hach Chemical Co., Box 907, Ames, Iowa 50010
12. Hellige Inc., 877 Stewart Avenue, Garden City, New York
13. Honeywell, Minneapolis, Minnesota 55408
14. Hydrolab Corporation, 6541 N. Lamar Blvd., P. O. Box 9406, Austin, Texas 78766
15. Horizon Ecology Co., 7435 North Oak Avenue, Chicago, Ill. 60648
16. K.D.J. Poly-Technic Inc., 10540 Chester Road, Cincinnati, Ohio, 45215
17. Koslow Scientific Company 7800 River Road, North Bergen, New Jersey 07047
18. Leeds & Northrup, North Wales, Pa. 19454
19. Oceanography International Corporation, P. O. Box DB, College Station, Texas 77840
20. Ohmart Corporation, 4241 Allendorf Drive, Cincinnati, Ohio 45209
21. Orion Research Incorporated, 11 Blackstone Street, Cambridge, Mass. 02139
22. Precision Scientific, 3737 West Cortland Street, Chicago, Ill. 60647
23. Raytheon Company, P. O. Box 360, Portsmouth, Rhode Island 02871
24. Technicon Corporation, Tarrytown, New York 10591
25. Universal Interloc Inc., 17401 Armstrong Avenue, Santa Anna, California 92705

Chapter 6
SAMPLING

6.1 Introduction

The basis for any plant pollution abatement program rests upon information obtained by sampling. Thus, all subsequent decisions may be based upon incorrect information if this step is not accurately pursued. There are several pitfalls which can occur if sampling is performed in a careless or naive manner. If a few basic principles are followed and if those responsible for sampling are forewarned, reliable results can be obtained without extensive and costly resampling.

Obtaining good results will depend upon certain details. Among these are the following:

1. Insuring that the sample taken is truly representative of the wastestream.

2. Using proper sampling techniques.

3. Protecting the samples until they are analyzed.

The first of these requirements, obtaining a sample which is truly representative of the wastestream, may be the source of significant errors. This is especially apparent in the case of "grab" or non-composited samples. It must be remembered that waste flows can vary widely both in magnitude and composition over a 24-hour period. Also, composition can vary within a given stream at any single time due to a partial settling of suspended solids or the floating of light materials. Because of the lower velocities next to the walls of the flow channel, materials will tend to deposit in these areas. Samples should therefore be taken from the wastestream where the flow is well mixed. Since suitable points for sampling in sewer systems are limited, numerous ideal locations are not usual. The outlets of well mixed tanks are excellent sample points. In addition, the flow must be measured and the total waste load calculated by multiplying the flow rate times the concentration. A discussion of flow measurement techniques is presented in Chapter 7.

The usual method for accounting for variations in flow and waste constituents and minimizing the analytical effort is by compositing the samples. Basically, sufficient samples should be taken so that, when mixed together (before analysis), the results which are obtained will be similar to taking a sample from a completely-mixed tank which had collected all the flow from the stream in question. Greater accuracy is obtained if the amount of sample in the composite is taken in proportion to the flow. In general, the greater the frequency of samples taken for the composite, the more accurate the result.

If batch processes which "slug" the system are present, compositing can lead to erroneous results unless the sampling is done at a very high frequency (possibly continuously) or unless the flow is "smoothed out" by flow equalization techniques.

Obtaining a representative sample should be of major concern in a monitoring program. A thorough analysis of the waste flows in the plant must be made and a responsible staff member should be assigned to insure that the samples taken are representative. As a general rule, closer attention must be given to waste sampling than in the sampling of a manufacturing process stream.

After a properly composited representative sample has been collected, it is essential that it be maintained in a state that will not introduce error prior to analysis. Because some samples are preserved only with difficulty, it is desirable to provide analysis as quickly as possible. For this reason, it may be necessary to abandon a compositing technique for some parameters. In these cases, it will be necessary to take grab samples for immediate analysis.

Obvious precautions, such as avoidance of contamination through dirty sample bottles, apply to waste monitoring as well as to sampling from a manufacturing process. One very simple required procedure which is often overlooked is the establishment of a sample marking and recording method which prevents switching of samples or confusion as to their origin. It is wise, of course, to insure that waste sample bottles not be used for process sampling.

Good sampling technique is important enough to warrant the following discussion of sampling details to assist in an analysis and monitoring program.

6.2 Types of Samples

The two most common types of samples are known as grab samples and composite samples and either may be obtained manually or automatically.

6.2.1 Grab Samples

Grab samples may be taken manually or automatically from the wastestreams. Each sample shows the waste characteristics at the time the sample is taken. Automatic sampling is essentially the same as taking a series of grab samples at regular intervals. The volume of a grab sample to be taken depends on the total number of separate analyses that must be made; however, a quart is usually sufficient. Wide mouth jars are preferred for sample collection in order to facilitate the rapidity of sample collection. A grab sample may be preferred over a composite sample when:

1. The water to be sampled does not flow on a continuous basis, such as occurs at an intermittently dry discharge outlet or when contaminated process tanks are periodically dumped. A grab sample from such a discharge is sufficient to obtain the waste characteristics of a batch dump. It is important to make certain that the intermittent dump is well mixed when the sample is taken.

2. The waste characteristics are relatively constant. For such wastes, a complex sampling program is not necessary since an occasional grab sample may be entirely adequate to establish waste characteristics.

3. It is desired to determine whether or not a composite sample obscures extreme conditions of the waste. A classic example is the possible variation of pH. A composite sample may have a neutral pH while individual grab samples may exhibit a wide pH range. It may be impossible to treat a widely varying waste biologically without pretreatment or neutralization, yet these characteristics may not be apparent from a properly composited sample. An example of pH varying with time occurs in the textile industry where the pH in the morning may be as low as 3.5, while in the afternoon, the wastewater pH may be as high as 11.

Grab samples are required when analyzing wastewaters for parameters such as dissolved gases, residual chlorine, soluble sulfides, temperature, and pH.

6.2.2 Composite Samples

In order to minimize the number of samples to be analyzed, it is usually desirable to mix several individual samples. The amount of the individual sample that may be added to the total mixture depends on the flow at the time the sample was taken. For example, for every gallon per minute of flow at the time of sampling, 1 ml is added to the composite sample. Judgment should be used in deciding upon the quantity of each individual sample. As long as the ratio of flow to individual sample volume remains the same, the

compositing should be valid. The total amount of composite sample depends on the number and types of analyses to be made; the minimum quantity being about 2 liters. The minimum amount of an individual sample should be about 200 ml, if the sample is taken with time intervals of about 1 hour. When continual sampling is employed at intervals of about 3 to 5 minutes, the minimum amount of sample should be not less than 25 ml. Depending on the time and variability of plant operation, 2, 4, 8, 16, or 24-hour composites may be collected. When the waste characteristics are variable, the sample should be composited over a shorter period of time. Samples may be composited on the basis of either time or flow.

1. Flow - The amount of samples collected, or added to the mixture during the sampling period is proportional to the waste flow at the time of sampling. Samplers are available that automatically composite on the basis of flow.

2. Time - Another approach to sample compositing is the collection of samples with a fixed volume after a certain quantity of waste flow has passed the sampling station.

Composite samples provide sufficiently accurate data if the variability of the waste characteristics is moderate; however, variability of waste characteristics must be determined by the analysis of grab samples. The time length of a composited sample is limited by the time the sample can be stored without changing the waste characteristics. For example, it is recommended that the analysis for BOD be initiated within 8 hours after sampling. Composite sampling should be avoided when cyanide and acid wastes may pass the sampling point at different times during the compositing period.

6.3 Manual Sampling

Manual sampling is recommended during the preliminary survey. The preliminary survey should determine when and where automatic samplers are needed, the portion of the wastestream samples that should be pumped, etc. Manual sampling has the advantage that the sample collector can observe unusual conditions. Grab samples from batch dumps are usually performed manually.

6.4 Automatic Sampling

When several points are to be sampled at frequent intervals, or when a continuous record is required, it may be more convenient to install automatic samplers. The installation cost of automatic samplers is offset by the savings on labor required for manual collection. An added advantage to automatic sampling is the possible reduction of errors inherent in manual collection.

Continuous samplers are marketed commercially and must be examined carefully to see that they are suitable for the waste characteristics in question. For example, a sampler intended to collect acid wastes should be constructed of noncorrosive materials. To be reliable, continuous samplers require frequent inspection and cleaning. Automatic samplers are available that will obtain composite samples either as a function of time or flow.

6.5 Frequency of Sampling and Duration of Sampling Program During a Waste Survey

The frequency of sampling depends on the flow rate and the wastewater characteristics. The expected range in flow rate and waste concentration should be determined during the preliminary survey. The frequency of grab samples is often once per hour. When the results of the survey indicate low variability, the grab samples may be taken at longer intervals of 2, 4, 8, 16, or even 24 hours. For highly variable waste concentrations, the installation of an automatic sampler should be considered. The time over which samples should be composited also depends on the variability of the wastestream. For high variability, individual samples for compositing should be taken as frequently as 1 every 3 minutes up to 1 per hour. The

maximum time over which a sample should be composited is controlled by the ability to store the individual samples adequately, but should never be longer than 24 hours. When the analyses are to determine important design criteria for biological treatment facilities, such as BOD, COD or TOC, the composite sample should extend over a period of between 8 to 12 hours when waste characteristics are relatively constant, and a period of between 2 to 4 hours if the waste characteristics have significant variation. Compositing samples over a period of time less than 2 hours is not usually necessary because the sewer system and treatment facilities may already have such an equalization effect. Thus, the variation in the waste load to the treatment facility cannot be expected to be greater than the 2-hour composite. If directed reuse of wastewater without treatment is considered, the variability within a 2-hour period should be obtained. A suggested sampling schedule is shown in Table 6-1.

TABLE 6-1

SUGGESTED SAMPLING OR COMPOSITING SCHEDULE (1)

Characteristic	High Variability	Low Variability
BOD[a]	4 hr	12 hr
C OD or TOC[a]	2 hr	8 hr
Suspended Solids	8 hr	24 hr
Alkalinity or Acidity	1 hr grab	8 hr grab
pH	Continuous	4 hr grab
Nitrogen and Phosphorus[b]	24 hr	24 hr
Heavy Metals	4 hr	24 hr

[a]The compositing schedule where continuous samplers are not used depends on variability, i.e., 15 min for high variability to 1 hr for low variability.

[b]Does not apply to nitrogen or phosphorus wastes (e.g., fertilizer).

An intensive plant survey will generally last between 5 to 10 days of normal plant operation. The plant should operate during the survey under normal conditions; however, it is important to consider seasonal variations. Treatment facilities should be designed to treat the highest pollution load expected.

6.6 Sample Handling

In order to obtain a representative sample, many precautions are necessary. Some of these precautions and general sampling rules are as follows:

1. The sample should be taken at a place where the wastewater is well mixed, such as near a Parshall flume or a location in a sewer with hydraulic turbulence. Weirs tend to enhance the settling of solids immediately upstream and the accumulation of floating oil or grease immediately downstream. Such locations should be avoided as a sample source.

2. The sample should be taken in the center of the channel of flow where the velocity is highest and the possibility that solids have settled is a minimum. In order to avoid an excess of floating materials, the mouth of the collecting container should be placed a few inches below the water surface.

3. A low level of turbulence can be induced by blowing air through the wastestream. This practice of inducing turbulence by introducing air is not advisable if the wastestream is to be analyzed

for dissolved gases or volatile matter. Mechanical stirring may be used to induce turbulence with much less influence on the results.

4. The sampling of wastestreams with immiscible fluids, such as a mixture of oil and water, requires special attention. At places in the wastestream where oil floats, it is simple to obtain a sample of the oil to analyze, but difficult to determine the quantity of oil flowing per day. A method commonly used to estimate total volume is to divert the wastestream into a container. After separating the two fluids, it is possible to measure the thickness of the oil layer and thus ascertain the volume of oil present. Another problem with oil is adherence to the sampling device which will require frequent cleaning.

5. The volume of the sample obtained should be sufficient to perform all the required analyses plus an additional amount for repeating any doubtful analyses. The required volume of sample for most analyses is shown in Table 6-2. The lower value is for concentrated wastestreams. The minimum volume of a grab sample should be between 1 and 2 liters. Individual portions of a composite sample should be at least 25 to 100 ml. Depending on the frequency of sampling, and the individual sample volume, the total composited sample should be between 2 and 4 liters.

6. In some cases, it may be desirable to accumulate a number of individual samples for compositing at one time, such as the end of a work shift or the end of a work day. It would be possible to use only a portion of each aliquot in compositing the total; however, it is more desirable to mix the entire volume of all individual samples and then use a portion of the total mixture for analytical purposes. In either choice, it is a prerequisite that the individual samples are representative of the flow at the time collected so that the integrity of the total composited sample is maintained.

7. The samples should be stored in a manner that insures that the characteristics to be analyzed are not altered. Refrigeration in some instances may be necessary. When the storage of a sample interferes with a particular analysis, it is preferred to take separate samples for such analyses which may require special preservation techniques.

8. The sample container and sampling device should be clean and uncontaminated. Before the sample is taken, the container should be rinsed several times with the wastewater.

9. Each sample should be labeled with an identification card containing, as a minimum, the following information:

    a. Designation or location of sample collection.

    b. Date and time of collection.

    c. Indication of grab or composited sample with appropriate time and volume information.

    d. Notation of information that may change before laboratory analyses are made. This would include temperature, pH, and appearance.

The above precautions for obtaining a representative sample are applicable to chemical, bacteriological and radiological samples. The latter two types of samples require additional precautions, however.

TABLE 6-2

VOLUME OF SAMPLE REQUIRED FOR DETERMINATION OF THE VARIOUS CONSTITUENTS OF INDUSTRIAL WATER

	Volume of Sample,[a] ml
PHYSICAL TESTS	
*Color and Odor	100 to 500
*Corrosivity	flowing sample
*Electrical conductivity	100
*pH, electrometric	100
Radioactivity	100 to 1000
*Specific gravity	100
*Temperature	flowing sample
*Toxicity	1000 to 20 000
*Turbidity	100 to 1000
CHEMICAL TESTS	
Dissolved Gases:	
†Ammonia, NH_3	500
†Carbon dioxide, free CO_2	200
†Chlorine, free Cl_2	200
†Hydrogen, H_2	1000
†Hydrogen sulfide, H_2S	500
†Oxygen, O_2	500 to 1000
†Sulfur dioxide, free SO_2	100
Miscellaneous:	
Acidity and alkalinity	100
Bacteria, iron	500
Bacteria, sulfate-reducing	100
Biochemical oxygen demand	100 to 500
Carbon dioxide, total CO_2 (including CO_3^{--}, HCO_3^-, and free)	200
Chemical oxygen demand (dichromate)	50 to 100
Chlorine requirement	2000 to 4000
Chlorine, total residual Cl_2 (including OCl^-, HOCl, NH_2Cl, $NHCl_2$, and free)	200
Chloroform - extractable matter	1000
Detergents	100 to 200
Miscellaneous:	
Hardness	50 to 100
Hydrazine	50 to 100
Microorganisms	100 to 200
Volatile and filming amines	500 to 1000
Oily matter	3000 to 5000
Organic nitrogen	500 to 1000
Phenolic compounds	800 to 4000
pH, colorimetric	10 to 20
Polyphosphates	100 to 200
Silica	50 to 1000
Solids, dissolved	100 to 20 000
Solids, suspended	50 to 1000
Tannin and lignin	100 to 200
Cations:	
Aluminum, Al^{+++}	100 to 1000
†Ammonium, NH_4^+	500
Antimony, Sb^{+++} to Sb^{+++++}	100 to 1000
Arsenic, As^{+++} to As^{+++++}	100 to 1000
Barium, Ba^{++}	100 to 1000
Cadmium, Cd^{++}	100 to 1000
Calcium, Ca^{++}	100 to 1000
Chromium, Cr^{+++} to Cr^{++++++}	100 to 1000
Copper, Cu^{++}	200 to 4000
†Iron, Fe^{++} and Fe^{+++}	100 to 1000
Lead, Pb^{++}	100 to 4000
Magnesium, Mg++	100 to 1000
Manganese, Mn^{++} to $Mn^{+++++++}$	100 to 1000
Mercury, Hg^+ and Hg^{++}	100 to 1000
Potassium, K^+	100 to 1000
Nickel, Ni++	100 to 1000
Silver, Ag^+	100 to 1000
Sodium, Na^+	100 to 1000
Strontium, Sr^{++}	100 to 1000
Tin, Sn^{++} and Sn^{++++}	100 to 1000
Zinc, Zn++	100 to 1000

TABLE 6-2 continued

VOLUME OF SAMPLE REQUIRED FOR DETERMINATION OF THE VARIOUS CONSTITUENTS OF INDUSTRIAL WATER

	Volume of Sample,[a] ml
Anions:	
Bicarbonate, HCO_3	100 to 200
Bromide, Br^-	100
Carbonate, CO_3^{--}	100 to 200
Chloride, Cl^-	25 to 100
Cyanide, Cn^-	25 to 100
Fluoride, Fl^-	200
Hydroxide, OH^-	50 to 100
Iodide, I^-	100
Nitrate, NO_3^-	10 to 100
Nitrite, NO_2	50 to 100
Phosphate, ortho, PO_4^{---}, HPO_4^{--}, $H_2PO_4^-$	50 to 100
Sulfate, SO_4^{--}, HSO_4^-	100 to 1000
Sulfide, S^{--}, HS^-	100 to 500
Sulfite, SO_3^{--}, HSO_3^-	50 to 100

[a] Volumes specified in this table should be considered as a guide for the approximate quantity of sample necessary for the particular analysis. The exact quantity used should be consistent with the volume prescribed in the standard method of analysis, whenever the volume is specified.

* Aliquot may be used for other determinations.

† Samples for unstable constituents must be obtained in separate containers, preserved as prescribed, completely filled and sealed against all exposure.

6.7 Bacteriological Samples

Bacteriological samples should be obtained in wide mouth bottles with a capacity of at least 300 ml and equipped with ground glass stoppers. The bottles should be sterile. One way of assuring this requirement is by oven heat for 2 hours at 170°C. The bottles should not be completely filled so that mixing may be accomplished by shaking prior to analysis.

While sampling, only the lower part of the bottle should be held by the hand. The mouth of the bottle should be in the direction of the current. The stopper should be protected from contamination while sampling and the samples should be stored at 4°C immediately after sampling. In transport, the bottles should be placed in an insulated ice box. If bacteriological samples are to be taken from a pipe tap, the water should be allowed to run for at least five minutes and the tap should be sterilized by flaming before the sample bottle is filled.

6.8 Sampling for Radioactivity

Plastic or wax-coated containers are preferred for collecting radioactive samples because glass or metal containers are more adsorptive. Radioactivity can be present in solution and in the suspended matter. In

order to prevent changing the radioactivity distribution between the suspended solids and the soluble part, no preservation chemicals should be added before the sample is filtered. When the radioactivity content is high, protective clothing is required during sample collection.

6.9 Sample Preservation

Samples should be analyzed as soon as possible after collection; however, in practice, immediate analysis is seldom feasible. Cognizance should be taken of certain time-dependent chemical changes that can occur in samples, such as:

1. Metal cations may precipitate as hydroxides or form complexes.

2. The valence state of the ions may change by oxidation or reduction.

3. Metal cations may be adsorbed on the surfaces of glass, plastic or quartz containers.

Microbiological activity may also change the characteristics of the sample as follows:

1. Cell lysis may increase the BOD and COD.

2. Cell productivity may change the BOD and COD.

3. The organic nitrogen and organic phosphorous content may be changed.

Composite samples must be preserved in such a way that the characteristics to be measured do not change in quantity or quality. Special collection methods are sometimes required to avoid such changes. For example, air should be excluded when samples are to be analyzed for O_2, CO_2, NH_3, H_2S, free chlorine, pH, hardness, SO_2, NH_4, FE^{++}, acidity and alkalinity.

In practice, this means that air should not be permitted to enter the sample bottle and that the bottle should be completely filled. The pH should always be determined immediately after the sample has been collected and the oxygen content should be determined in situ or be fixed with manganese sulfate and potassium iodide as in the Winkler method.

The usual storage procedure is to place the samples in a refrigerator. Table 6-3 presents information concerning the recommended storage procedures and the applicability of refrigeration and freezing to several waste characteristics. If the COD cannot be measured for several days, it is recommended that the pH be adjusted to a range between 3 and 5. Reference 9 contains information on the storage of bacterial samples.

Preservatives that do not influence the analysis should be added immediately after the sample is taken. Sample preservation methods for individual characteristics are tabulated in Table 6-4. Some authors have proposed alternative methods of preservation for certain constituents as follows:

1. For nitrogen and phosphorous: add 1 ml H_2SO_4/1.

2. For cyanide: raise the pH to at least 11 (maximum storage time is 24 hours).

3. Samples with heavy metals should be filtered at the site of collection and acidified to a pH of about 3.5 with nitric acid.

TABLE 6-3

RECOMMENDED STORAGE PROCEDURE (7)

Analysis	Sample Storage	
	Refrigeration @ 4 C	Frozen
Total Solids	OK	OK
Suspended Solids	Up To Several Days	NO
Volatile Suspended Solids	Up To Several Days	NO
COD	Up To Several Days	OK
BOD	Up To One Day in Composite Sampling Systems	Lag Develops, Must use Fresh Sewage Seed

TABLE 6-4

SAMPLE PRESERVATION (5)

Parameter	Preservative	Maximum Holding Period
Acidity-Alkalinity	Refrigeration at 4° C	24 hours
Biochemical Oxygen Demand	Refrigeration at 4° C	6 hours
Calcium	None required	7 days
Chemical Oxygen Demand	2 ml H_2SO_4 per liter	7 days
Chloride	None required	7 days
Color	Refrigeration at 4° C	24 hours
Cyanide	NaOH to pH 10	24 hours
Dissolved Oxygen	Determine on site	No holding
Fluoride	None required	7 days
Hardness	None required	7 days
Metals, Total	5 ml HNO_3 per liter	6 months
Metals, Dissolved	Filtrate: 3 ml 1:1 HNO_3 per liter	6 months
Nitrogen, Ammonia	40 mg $HgCl_2$* per liter - 4° C	7 days
Nitrogen, Kjedahl	40 mg $HgCl_2$* per liter - 4° C	Unstable
Nitrogen, Nitrate-Nitrite	40 mg $HgCl_2$* per liter - 4° C	7 days
Oil and Grease	2 ml H_2SO_4 per liter - 4° C	24 days
Organic Carbon	2 ml H_2SO_4per liter (pH 2)	7 days
pH	Determine on-site	No holding
Phenolics	1.0 g $CuSO_4$/1 + H_3PO_4 to pH 4.0 - 4° C	24 hours
Phosphorous	40 mg $HgCl_2$* per liter - 4° C	7 days
Solids	None available	7 days
Specific Conductance	None required	7 days
Sulfate	Refrigeration at 4° C	7 days
Sulfide	2 ml Zn acetate per liter	7 days
Threshold Odor	Refrigeration at 4° C	7 days
Turbidity	None Available	7 days

*Disposal of mercury-containing samples is a recognized problem; research investigations are under way to replace it as a preservative.

6.10 Equipment Available for Sampling

6.10.1 Manual Sampling

A wide mouth bottle with an opening of at least two inches is recommended for manual sampling. Commercially available polyethylene sample bottles with a volume of about 1 liter are acceptable for most sampling and have the advantages of economy and safety. The wide mouth of the bottle is important in order to obtain the sample as rapidly as possible. If the sewer location does not permit obtaining a direct sample from the wastestream, a bucket and rope can be used to obtain a larger quantity of waste from which a direct sample may be taken.

A long-handled, wide-mouth cylindrical dipper of corrosion resistant material could also be used in order to obtain sufficient wastewater for sampling.

A weighted container may be used to hold and submerge a bottle while it is lowered into a wastestream. Point samplers are weighted bottles used to collect samples at a desired depth. In operation, a weighted bottle is corked and lowered into the wastestream, at the desired depth the cork is removed by another line and the sample is obtained. For stratified waste solutions, a graduated glass or plastic cylinder, open at both ends, may be lowered into the solution in order to obtain a cross-section of the sample. In the sampling position, the cylinder is corked at both ends by a level arrangement.

Another method of obtaining a sample at an inaccessible location is by use of a hand-operated pump. A tube fixed to the suction end of an ordinary pump may be lowered into the wastestream from which the sample is to be removed.

The Sirco Uniscoop Liquid Sampler is a simple, manually-operated device in which the sampler is lowered into a liquid to the desired level, then by pulling on the handle, a ball-plug opens which admits the wastewater into a sample cup.

6.10.2 Automatic Samplers

A wide range of automatic samplers are commercially available. Some automatic samplers are designed to take composite samples proportional to the flow and some are not. In theory, practically all automatic samplers can be connected to flow devices in order to obtain proportionate samples. For all samplers, the sampling lines should be kept as short as possible and traps and pockets in the lines where sludge can settle should be avoided. Polyethylene, teflon or other plastic containers are preferred for sample storage.

6.10.2.1 Non-porportional Samplers

When the flow is nearly constant, the non-proportional sampler is sufficient for collecting a composite sample. A simple system is shown in Figure 6-1, whereby a sample is drawn from the wastestream at a continuous flow rate. As water drains from the upper carboy, a vacuum is created which siphons waste into the lower container. The rate-of-flow is regulated by the screw clamp. If desired, the sample bottle could be located in a refrigerator. Since the flow rate is low, maintenance of the line is required to prevent clogging by solids or bacterial growth. Another type of non-proportional sampler contains an air vent control as shown in Figure 6-2. The speed with which the sample tank is filled depends on the setting of a valve handle. All samplers discussed in the next section are also applicable for non-proportionate sampling. Instead of connecting the sampler with a flow measurement device, the sampler could be connected with a timer, disregarding proportionate sampling.

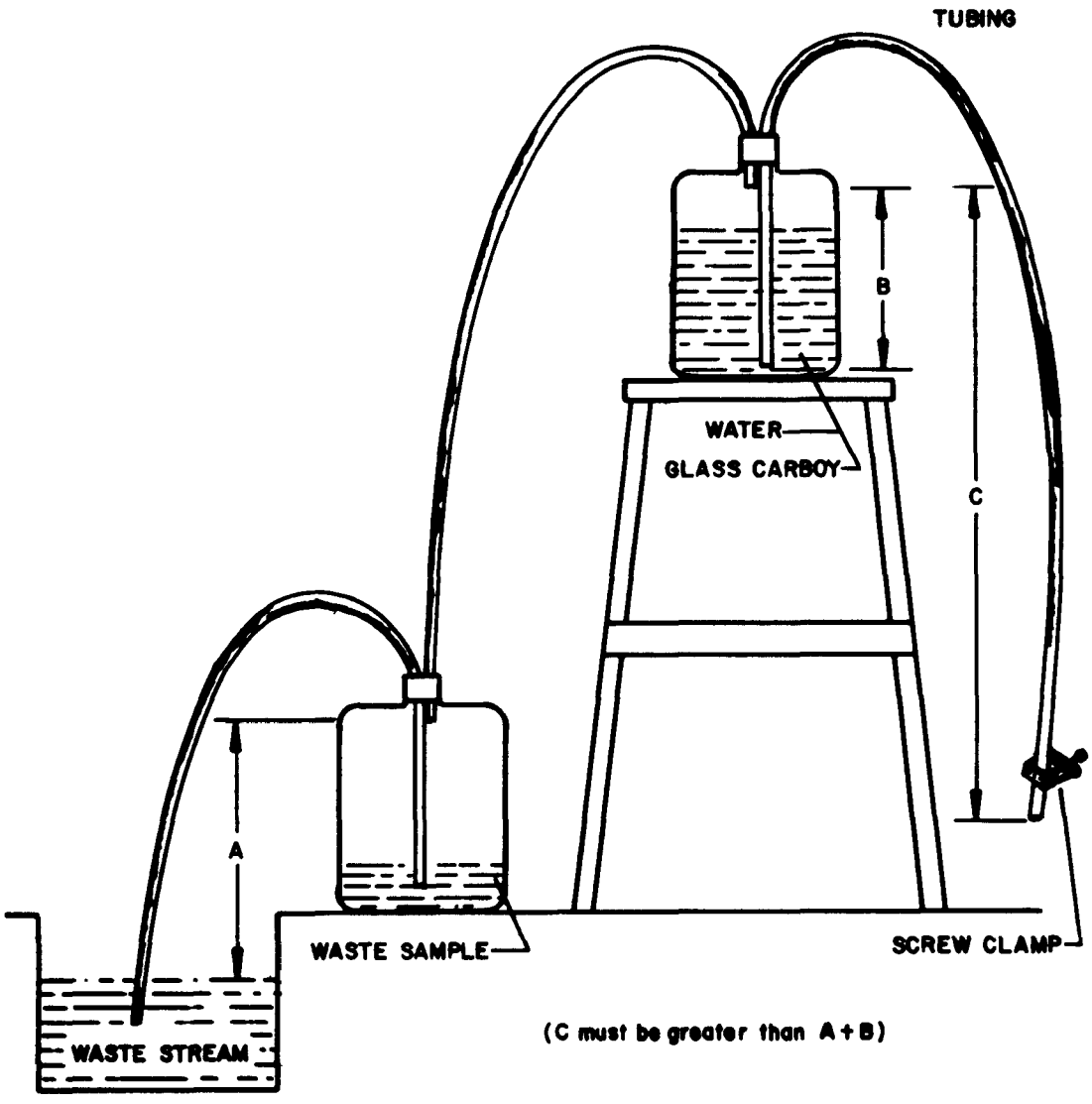

Figure 6-1. CONTINUOUS SAMPLER (6)

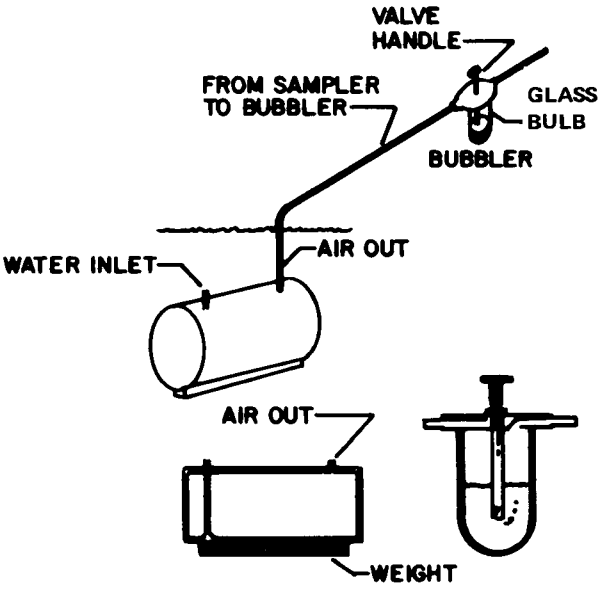

Figure 6-2. AIR RELEASE TYPE SAMPLER (8)

6.10.2.2 Proportional Samplers

There are two basic types of proportional samplers. One collects a definite volume at irregular time intervals; the other collects a variable volume at equally spaced time intervals. Both types are flow dependent, one dictating the time interval, the other regulating the sample volume. A sampler based on flow may be similar to the scoop-type sampler shown in Figure 6-3. The scoop rotates at a constant velocity. After a predetermined period of time, the scoop submerges in the water and takes a sample. The volume of the sample depends on the water level in the channel. Reference 4 gives a design formula for the scoop. The scoop-type sampler is limited to wastewater without high suspended or floating solids and must be installed at locations where the flow has a known relationship with the depth.

Another automatic sampler consists of a motor-driven wheel or disc, mounted on a frame and supporting a number of freely suspended buckets, as shown in Figure 6-4. The small buckets are mounted along the spokes of the wheel at varying distances from the axis. An increase in the water level will cause more buckets to be filled and thus result in a proportionate increase in the amount of sample being collected. A very simple proportional sampling device is a tipping bucket. The bucket empties itself when it is filled. An indicator is used to record the number of times the bucket empties. The tipping bucket can be used for flows in the range of 0.1 to 20 gpm.

The flow porportional sampler may be connected to a flow measurement device equipped with an integrator The principle of a flow proportional system is schematically drawn in Figure 6-5. Note that the flow measuring device may be an electric probe, a bubbler system, or a float.

Another type of flow proportional sampler, equipped with a solenoid valve, is shown in Figure 6-6. A constant sampling flow is pumped through a pipe or hose tap. After a predetermined volume has passed through the flow meter, the solenoid operating valve is opened and a sample is taken. The advantages of a constant wastestream pumped through the sampling hose are that bacterial growth can be minimized and the sample cannot deteriorate while standing in the sampling hose. This sampler can take a volume of waste from inaccessible sewers.

An air lift automatic sampler is shown in Figures 6-7 and 6-8. The air lift is used to take samples from a sewer when a pump cannot be used. When the compressed air supply is shut off, the spring in the sampler raises the piston which opens the inlet so that a portion of the wastewater enters the sampler. The air valve is then opened and the piston is forced down, thus, closing the inlet. Compressed air then passes through the air escape port into the main chamber of the sampler and forces the liquid up the sample line to the collecting container. The air supply is then cut off and the cycle is repeated.

A combination sampler is shown in Figure 6-9. A constant flow passes through the sampling chamber. The flow passes over an adjustable lever weir and then into a discharge line. The sampling dipper will periodically dip a sample from the flowing stream and discharge into a refrigerated bottle. The total sample volume obtained can be regulated by the size of the individual portions. The flow rate in the sampling line (3-4 fps) is sufficient to prevent significant growth of bacteria in the lines.

For water with high suspended solids content or corrosive characteristics a vacuum can be used to obtain the samples. A vacuum-type automatic sampler is shown in Figure 6-10. An interval timer activates the vacuum system which lifts liquid through a suction line into the sample chamber. When the chamber is filled, the vacuum is automatically closed. The pump then shuts off and the sample is drawn into the sample container. A secondary float check prevents any liquid from reaching the pump. The suction line drains by gravity back into the source line. With the vacuum system, no pockets of fluid remain to contaminate subsequent samples. An optional feature provides pressurized blowdown of the suction lines just prior to sampling, assuring that no old material, which might contaminate the new sample, remains in

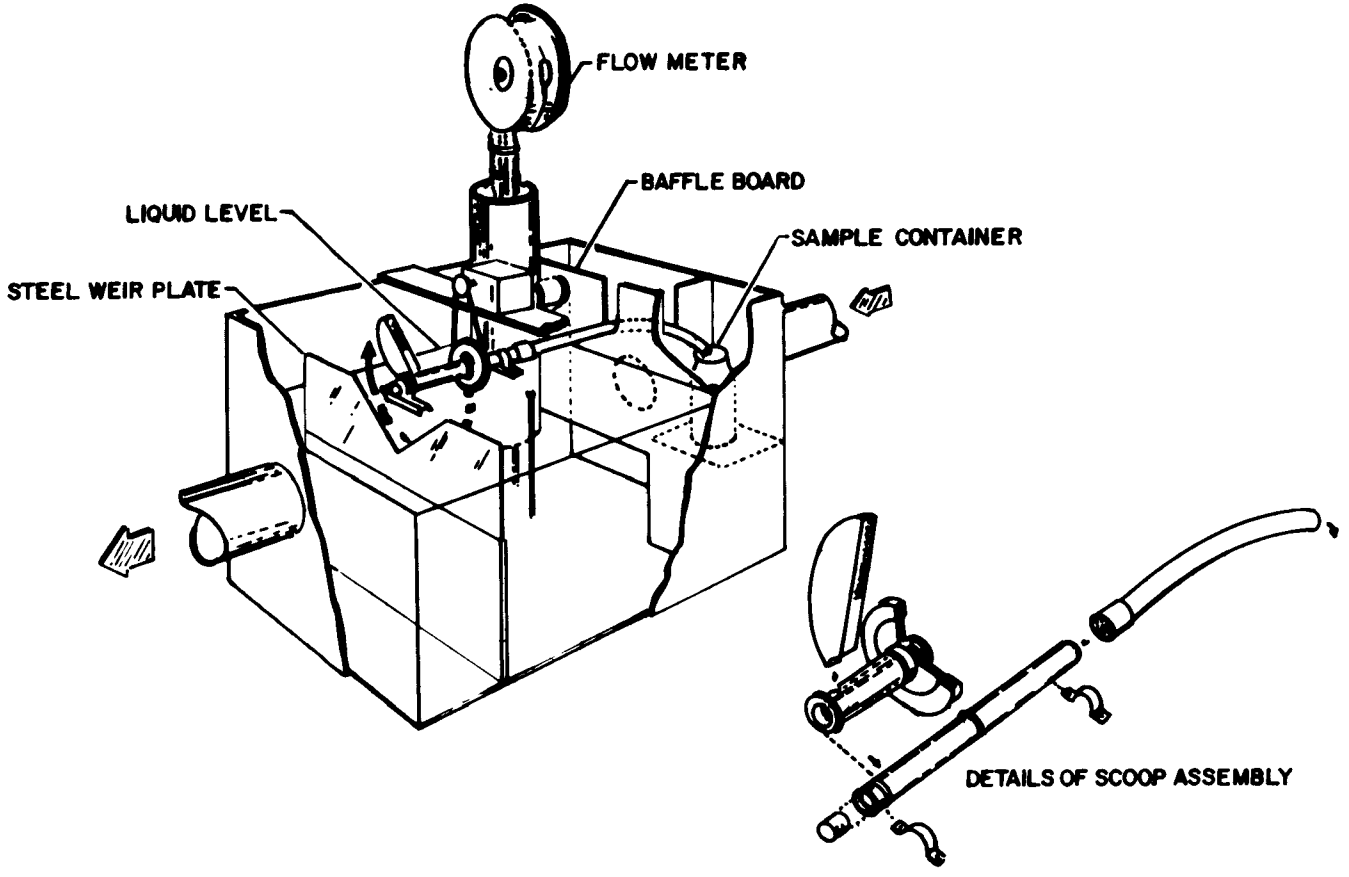

Figure 6-3. THE "SCOOP" SAMPLER INSTALLATION AND DETAIL OF ASSEMBLY (2)

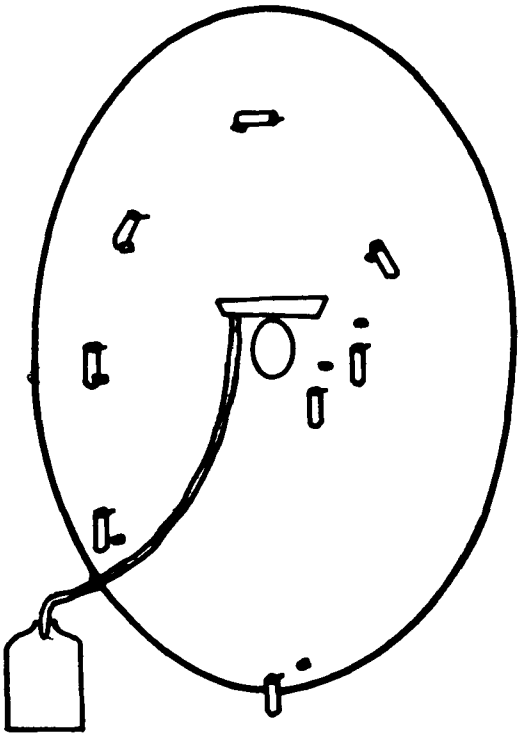

Figure 6-4. WHEEL WITH BUCKETS (8)

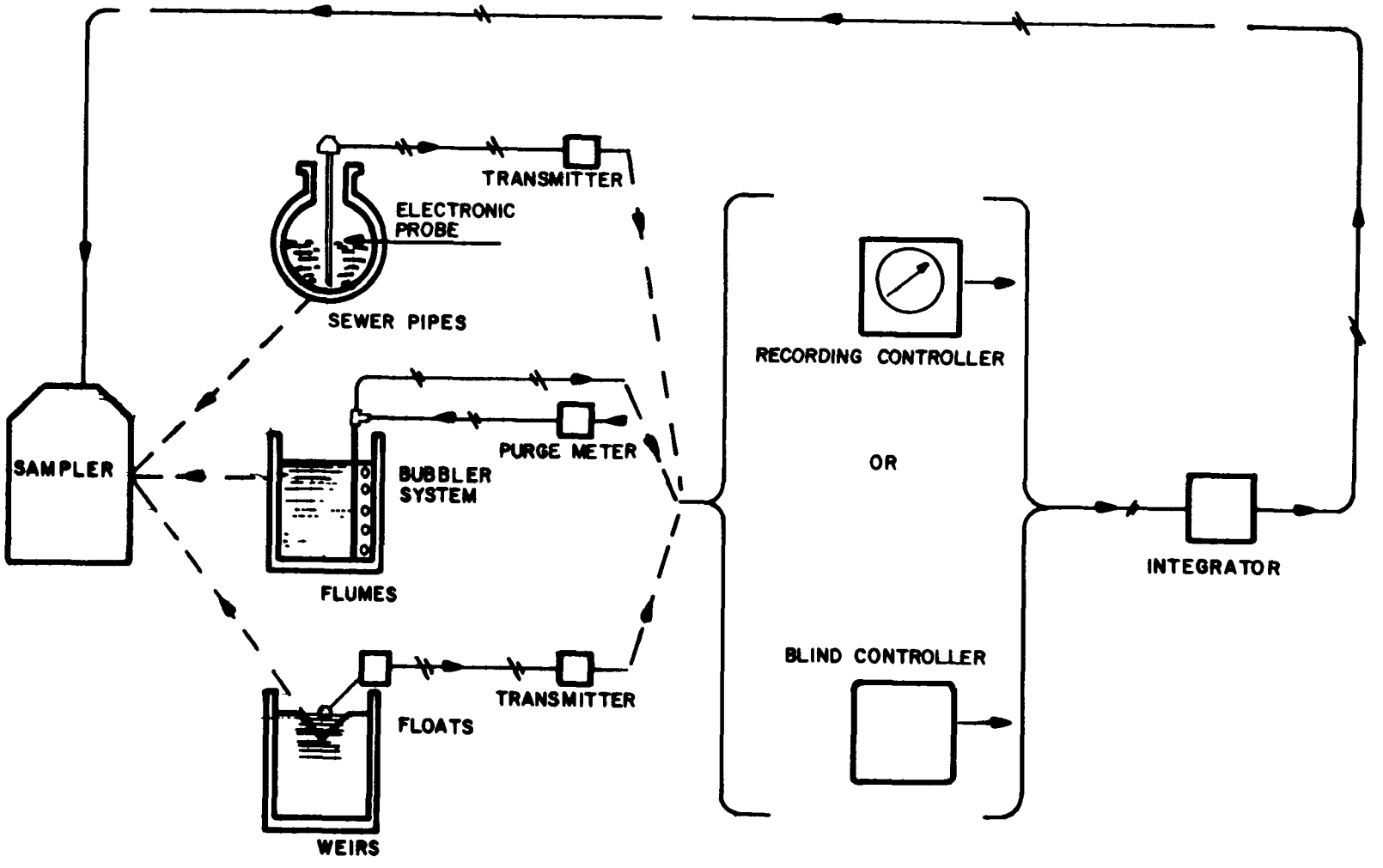

Figure 6-5. "FLOW-PROPORTIONAL" SAMPLER CONTROL SYSTEMS (6)

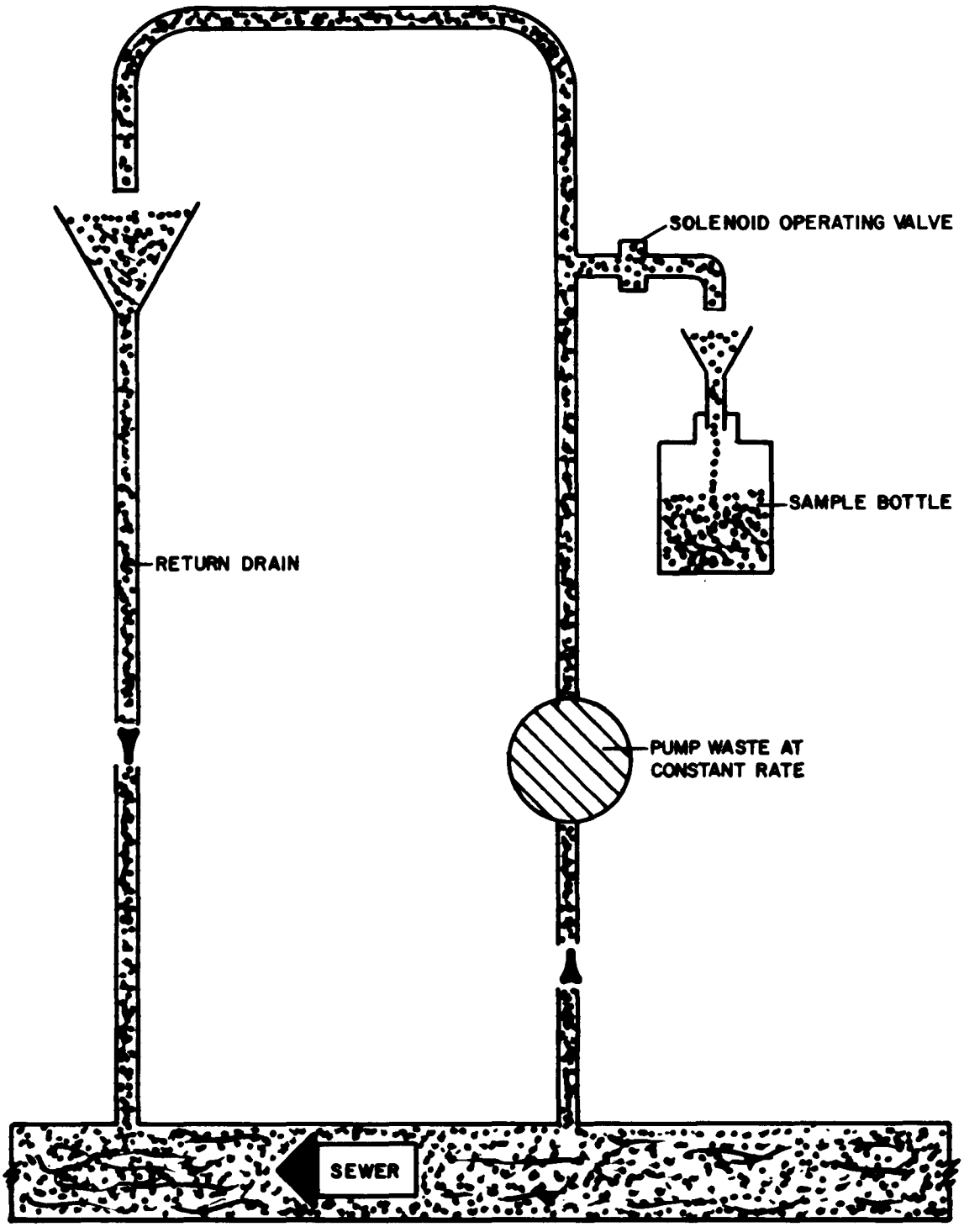

Figure 6-6. CONSTANT FLOW SYSTEM (6)

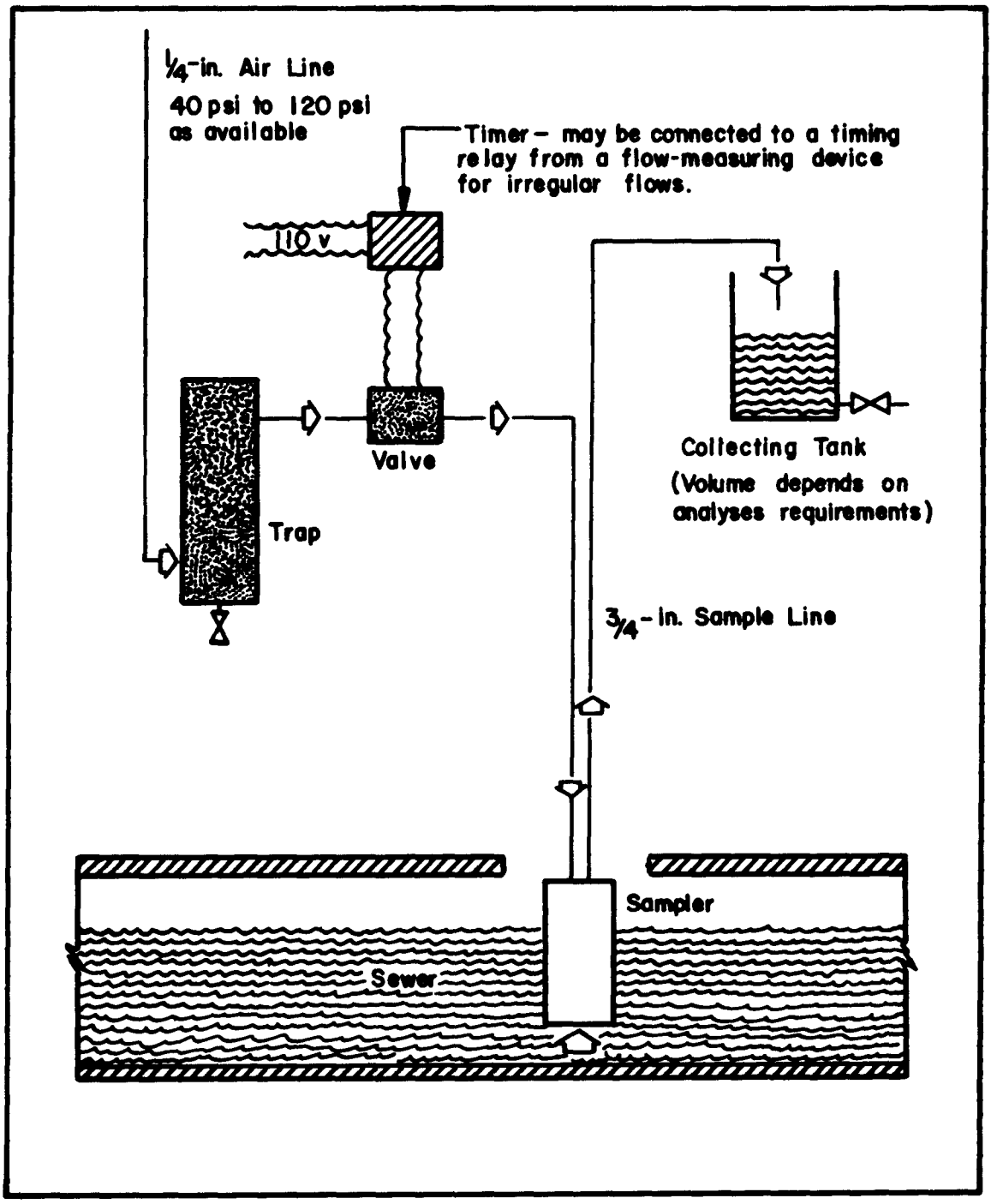

Figure 6-7. AIR LIFT AUTOMATIC SAMPLER SYSTEM (6)

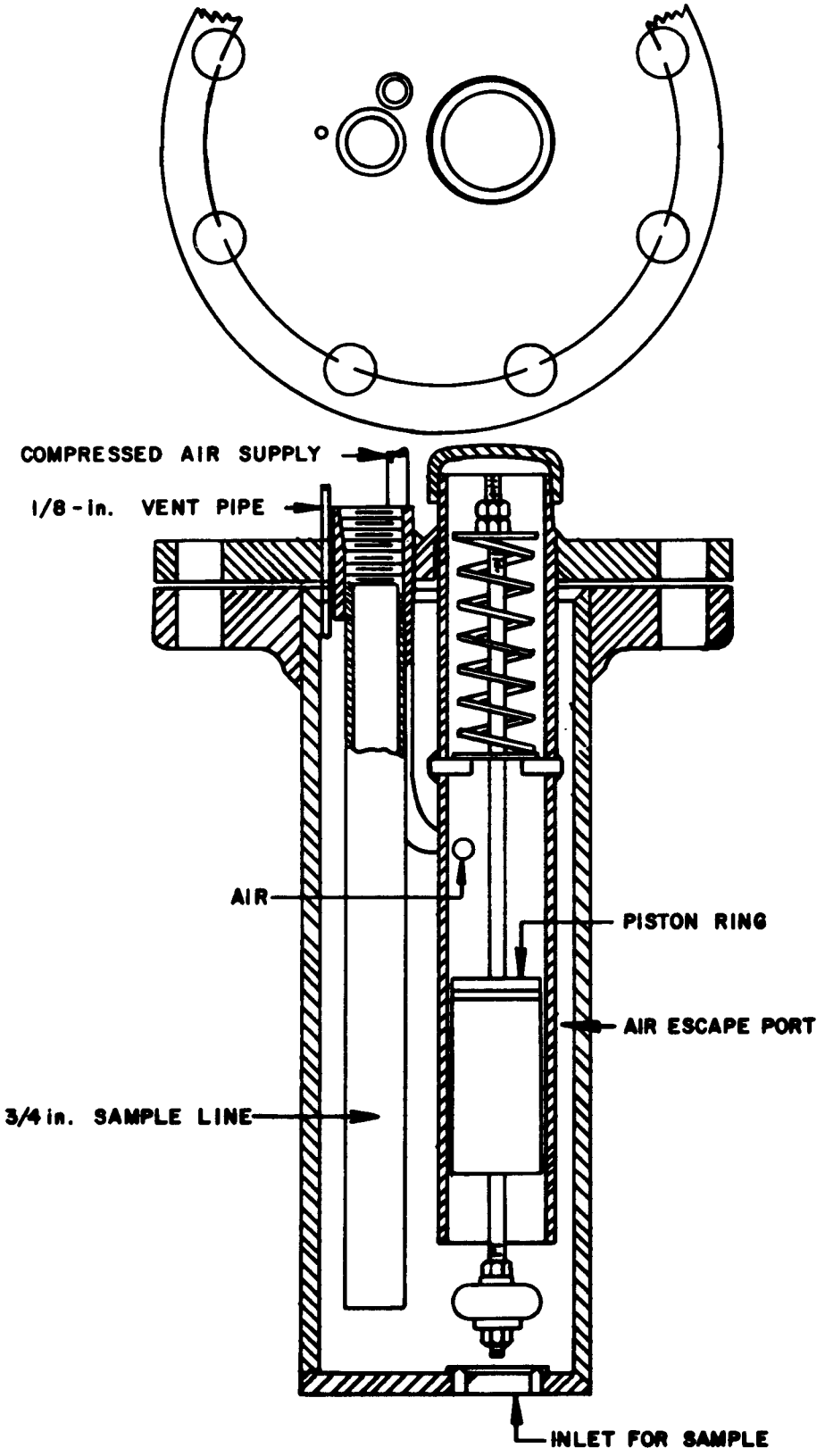

Figure 6-8. AIR LIFT AUTOMATIC SAMPLER (6)

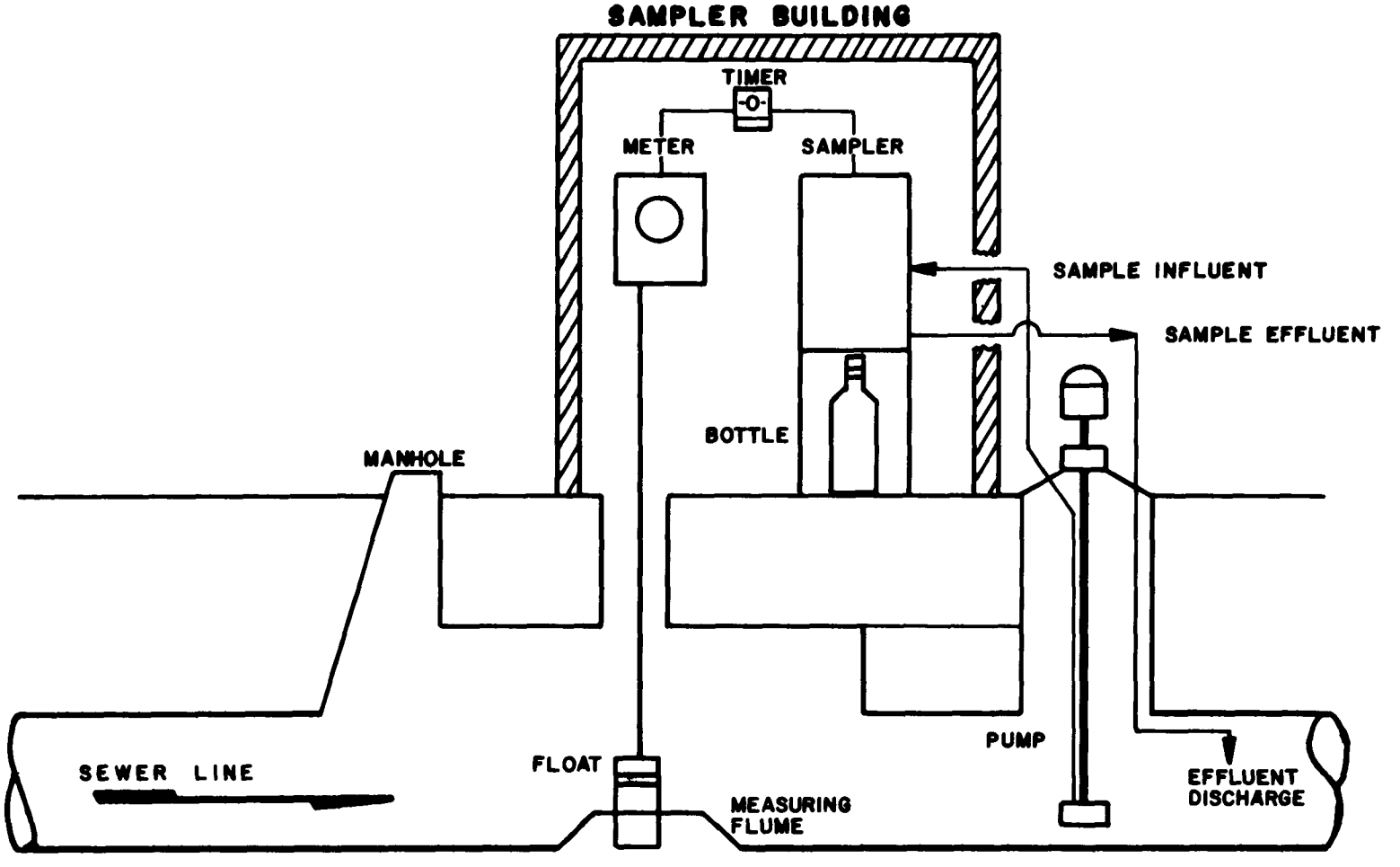

Figure 6-9. COMBINATION SAMPLER (3)

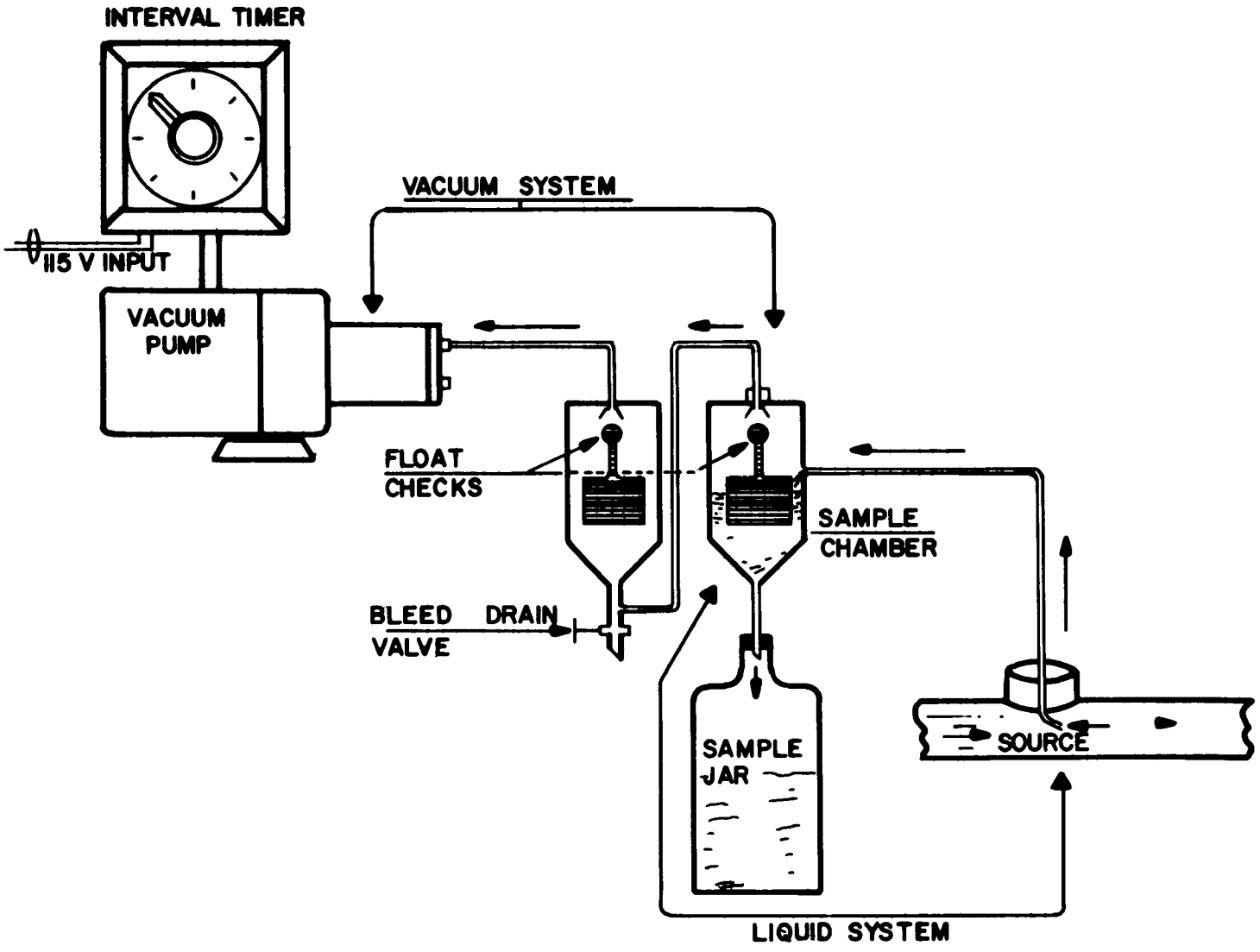

Figure 6-10. "CVE" SAMPLER SYSTEM SCHEMATIC (6)

the submerged end of the tube. The blowdown feature clears the line of accumulations which might cause plugging and provides a fresh air purge of the entire system. This system can operate on a time interval basis or on a signal from flow meters or other external control or monitoring devices and the sample container can be located in a refrigerated area. The maximum lift attainable under normal conditions is limited to about 20 feet.

Another type of sampler consists of a stainless steel cup mounted on an endless chain. When activated by an interval time control, the sampling cup is carried down through the wastewater and returns around the upper sprocket filled with sample and is discharged into a suitable container. The unit then rests until the next sample is required. Controls are available for flow-proportional operation. The chain type sampler is designed for permanent installations with depths of wastewater between 4 and 15 ft. A typical chain sampler, as shown in Figure 6-11, has prices ranging from $900 upwards. This sampler is designed to collect proportionate and non-proportionate samples with or without refrigeration.

Sirco manufactures another type of cup sampler whereby the sampling cup travels through a perforated guide into the effluent. The cup within the guide takes a sample while traversing the depth of the fluid. On its return, the cup empties the sample into a suitable receiver. The Sirco system is shown in Figure 6-12. The device is motor-controlled and can be regulated by a timer or a flow proportional recorder.

Sigmamotor offers a wide variety of automatic samplers equipped with peristaltic tubing type pumps. These samplers may be portable or line powered. The sample jar may be refrigerated and the pump controlled by a timer or flow integrator. Two types of pumps are available; one for relatively clear wastewater, and one for sampling effluents with long fibers and larger particles. Prices for the different systems vary from $400 to $1500. The maximum lift of the pumps is limited to about 22 ft. Figure 6-13 shows a portable automatic sampler for non-proportionate composite sampling. Automatic samplers designed for composite sampling may also be altered to take a series of grab samples, or a number of composite samples over a period of time. A portable unit for collection of a number of grab or composite samples is manufactured by ISCO.

A different system, developed by Markland Specialty Engineering Ltd. and shown in Figure 6-14, is used in places where suspended solids in the wastewater may cause problems with other samplers. Samples are actually blown out of the wastestream with compressed air by use of the so-called "Duckbill" which acts as a check-valve at the inlet, thus preventing air from escaping back through the inlet. Compressed air is introduced into the top fitting which forces the waste sample out the bottom fitting into the collecting bottle. When the top fitting is vented to the atmosphere, hydrostatic pressure of the liquid wastestream forces a fresh sample up the vertical inlet and through the "Duckbill" slit until the sampler body is filled above the vent fitting but below the top of the "Duckbill." A trapped air pocket in the dome keeps the sampler from filling completely. The sampler is now ready for a burst of compressed air to "call in" another sample to the collecting station. Reverse leakage of the sample back through the rubber "Duckbill" is impossible. The Markland Sampler may be portable and used to take composite samples proportionate or non-proportionate with flow. For sampling wastewater with a suspended solids content over 200 ppm, it is recommended that a controller be used to fill the sample chamber with air instead of water between samples. The cost of the Markland Sampling Unit varies between $500 and $1000.

6.10.2.3 Chemical feed injection pumps

Chemical feed injection pumps are used to withdraw samples from wastestreams by reversing their action; however, the use of injection pumps is limited to soluble wastes. Injection pumps usually operate on the pulsation principle causing small volumes of chemical solutions to be injected into flowing water under pressure.

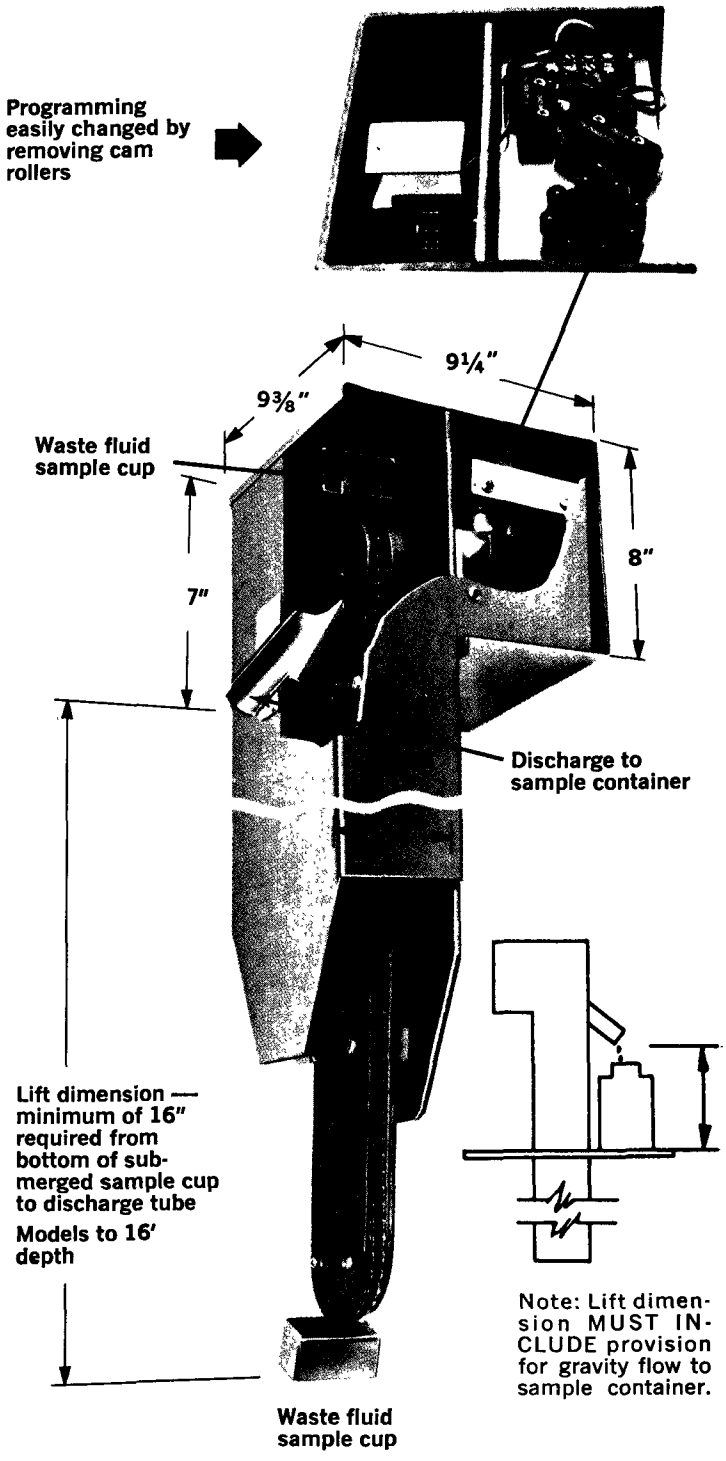

Figure 6-11. CHAIN TYPE SAMPLER (1)

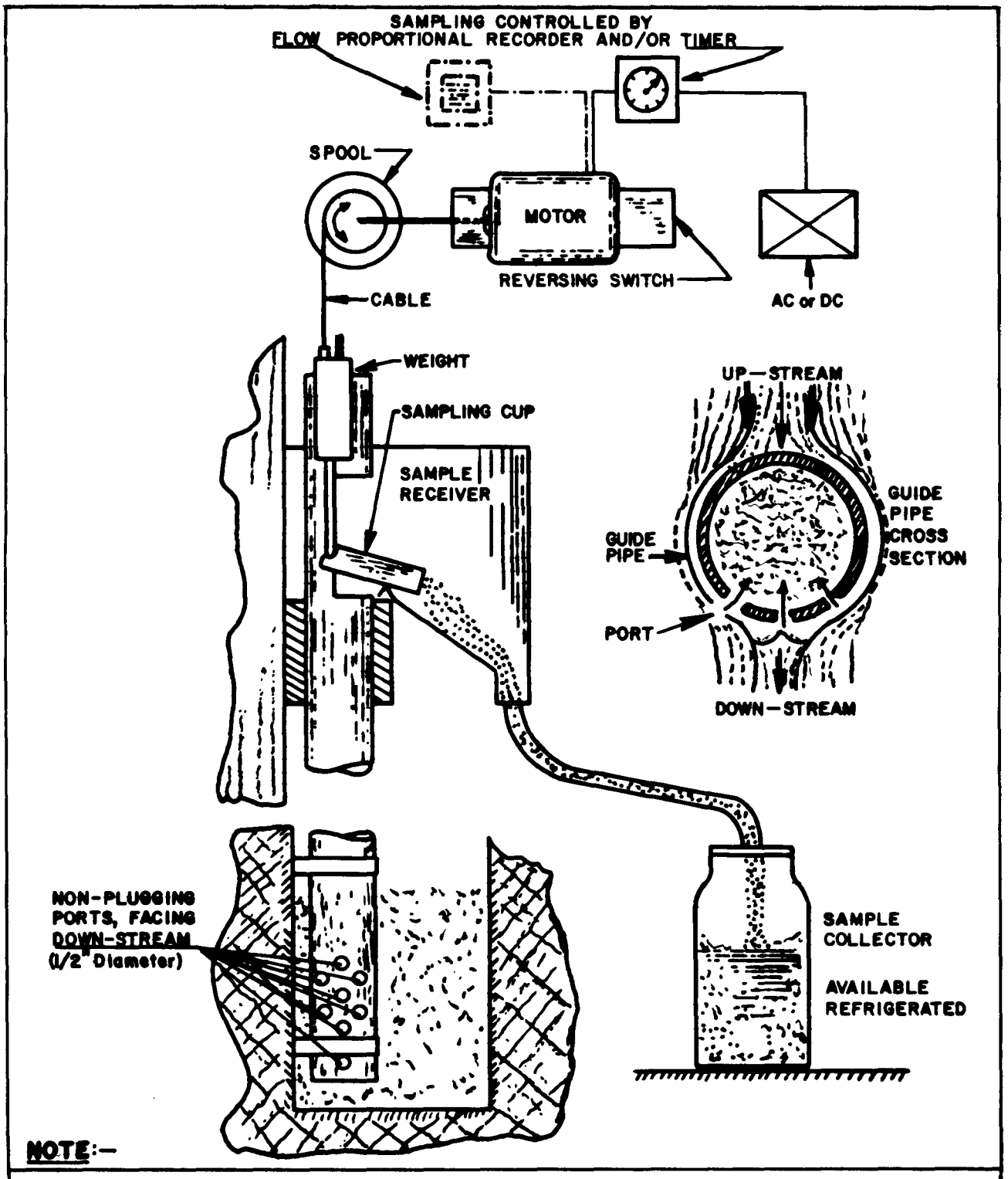

NOTE:—

1. The cable unwinds from the spool and after full extension (maximum depth) winds up on the other side, each cycle reversing the rotational direction.
2. The cup weight displaces while descending, the liquid in the guide pipe, for a fresh representative sample at every cycle.

Figure 6-12. NON PLUGGING EFFLUENT VARY-SAMPLER (8)

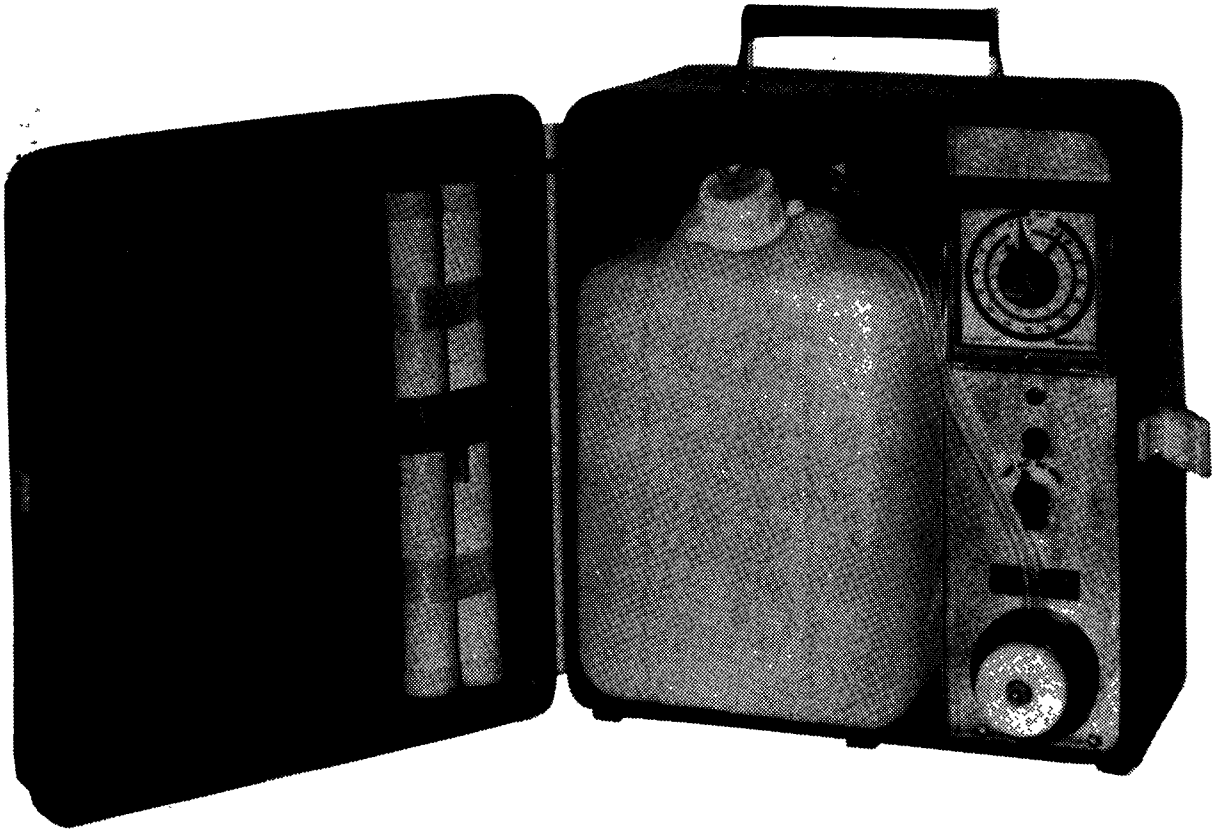

Figure 6-13. PORTABLE AUTOMATIC SAMPLER (7)

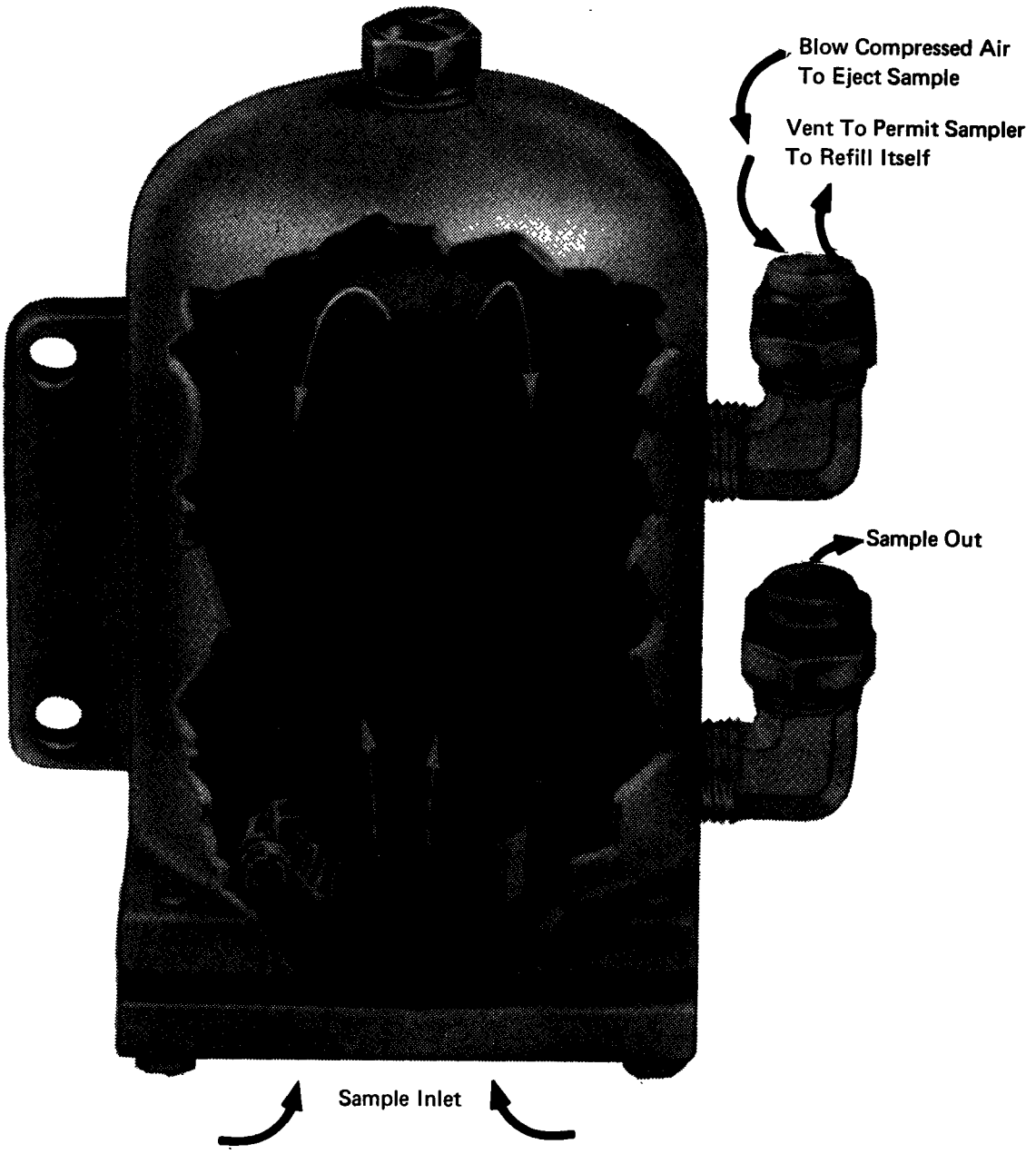

Figure 6-14. MARKLAND "DUCKBILL" SAMPLER (4)

Because they are capable of metering small quantities of liquids, they are suitable for withdrawing small volumes of waste from sewer lines. A timer may be used to regulate pumping intervals during heavy flow periods in order that the sample is taken proportional to the flow. Feed pumps are usually provided with adjustable-stroke and variable-speed features that regulate the volume of sample being collected.

6.11 References

1. Eckenfelder, W. W., *Water Quality Engineering for Practicing Engineers,* Barnes and Noble, Inc., New York, 1970.

2. Gard, C. M. and Snavely, C. A., "An Automatic Waste Sampler," *Water and Sewage Works,* p. 157, 1952.

3. Luley, H. G., et al., "Industrial Waste Automatic Sampling," *Journal Water Pollution Control Federation,* 37, p. 1508, 1965.

4. 1967 Book of ASTM Standards, Part 23; *Industrial Water; Atmospheric Analysis,* American Society for Testing and Materials, 1916 Race Street, Philadelphia, Pa. 19103.

5. *Methods for Chemical Analysis of Water and Wastes,* EPA, 16020-07/71, National Environmental Research Center, 1971.

6. *Planning and Making Industrial Waste Surveys,* Ohio River Valley Water Sanitation Commission, April, 1952.

7. Preliminary Investigational Requirements -- Petrochemical and Refinery Waste Treatment Facilities, *Water Pollution Control Research Series;* 12020 EJD, 03/71, EPA, March, 1971.

8. U. S. Department of the Interior, Federal Water Pollution Control Commission, *Laboratory Analysis for Treatment Plant Operators,* April, 1968.

9. *Standard Methods for the Examination of Water and Waste Water,* 13th Edition, American Public Health Association, 1971.

6.12 Additional Reading

1. Black, H. H., "Procedures for Sampling and Measuring Industrial Wastes," *Sewage and Industrial Wastes,* 24, p.45, 1952.

2. Frederikse, R. L., " A Battery Powered Proportional Stream Water Sampler," *Water Resources Research,* Vol. 5, No. 6, 1969.

3. Gray, S. C., et al., "Automatic Waste Sampler," *Sewage and Industrial Wastes,* 22, p.1047, 1950.

4. Howe, L. H. and Holley, C. W., "Comparisons of Mercury (11) Chloride and Sulfuric Acid as Preservatives for Nitrogen Forms in Water Samples," *Enrironmental Science & Technology,* 3, p. 478, 1969.

5. Jenkins, Davis, "A Study of Methods Suitable for the Analysis and Preservation of Phosphorous Forms in an Estuarine Environment," *Report for the Central Pacific River Basins Project,* Southwest Region, FWPCA, 1965.

6. Kline, H. S., "Automatic Sampler for Certain Industrial Wastes," *Sewage and Industrial Wastes,* 22, p. 922, 1950.

7. Mancy, K. H., *Instrumental Analysis for Water Pollution Control,* Ann Arbor Science Publishers, Inc., 1970.

8. Mancy, K. H., and Weber, W. J., Jr., *Analysis of Industrial Waste Waters,* Wiley Interscience, New York, 1971.

9. Rainwater, F. H. and Thatcher, L. L., "Methods for Collection and Analysis of Water Samples," Geological Survey, *Water Supply Paper,* 1454, 1960.

10. Roskoopf, R. F., "A Composite-Graph of Water Pollution Control Sampling," *Journal Water Pollution Control Federation,* Vol 40, p. 492, 1968.

11. *Standard Methods for the Examination of Water and Waste Water,* 13th ed., American Public Health Association, 1970.

12. Woodruff, P. H., "An Industrial Waste Sampling Program," *Journal Water Pollution Control Federation,* 37, p. 1223-1235, 1965.

6.13 List of Some Manufacturers of Wastewater Sampling Equipment

1. BIF Sanitrol, P. O. Box 41, Largo, Florida 33540

2. Brandywine Valley Sales Co., P. O. Box 242, Honeybrook, Pa. 19344

3. Instrumentation Specialties Co., (ISCO), P. O. Box 5347, Lincoln, Nebraska 68505

4. Markland Specialty Engineering Ltd., Box 145, Exobicoke, Ontario, Canada

5. N-Con Systems Company, Inc., 308 Main Street, New Rochelle, New York 10801

6. Quality Control Equipment Company, P. O. Box 2706, Des Moines, Iowa 50215

7. Sigmamotor, Inc., 14 Elizabeth Street, Middleport, New York 14105

8. Sirco Controls, 401 Second Ave. West, Seattle, Washington 90119

9. Tri-Aid Sciences, Inc., 161 Norris Drive, Rochester, New York 14601

Chapter 7
FLOW MEASUREMENTS

7.1 Introduction

An essential part of the wastewater survey is the collection of flow data. The design of wastewater monitoring and treatment facilities requires knowledge of flow rates, flow variability, and total flow. A variety of flow measuring methods and devices is available. The selection of the proper measuring method or device will depend on such factors as cost, type and accessibility of the conduit, hydraulic head available, and type and character of the wastes. When the properties of the wastewater are known, a suitable measuring or monitoring method may be chosen. Since each plant has its own characteristic wastewater flow system, only general considerations will be presented.

7.2 Some Basic Hydraulic Considerations

7.2.1 Types of Flow

There are two basic flow systems: flow in open-channels such as in sewers, and flow in completely filled pressure-conduits. There are two types of open channel flow to consider: steady flow which indicates a constant rate of discharge, and unsteady flow which is indicative of a variable rate of discharge with time. A flow is said to be uniform if the velocity and depth are constant along the conduit and non-uniform if the velocity, the depth, or both, change along the conduit. The installation of flow measuring devices should be at a location where the flow is uniform.

Pressure conduits will usually be used for incoming fresh water lines. Thus, a simple water meter may be used for measuring fresh water flow. For larger lines, the installation of an orifice, nozzle, or venturi meter should be considered. An orifice is inexpensive but has the disadvantage of a high pressure loss and the possible accumulation of settled solids. An orifice exhibits great flexibility in covering different flow ranges. The venturi meter is accurate, offers little head loss, free from solids accumulation, but is relatively expensive. The characteristics of the flow nozzle fall between an orifice and a venturi meter. A promising development for monitoring wastewaters with high suspended solids content is the magnetic flow meter. For small flows, up to about 30 gpm, a bucket and stopwatch is usually an easy and economical method.

For freely flowing sewers, one of the open end methods for flow estimation can be economically used. In using the friction formulas, large errors result from inaccurate determination of the slope and coefficient of roughness. However, for most wastewater surveys, friction formulas are sufficiently accurate and can be checked by the use of floats to compare computed and observed velocities. For inaccessible sewers, the salt dilution method, using conductivity determinations, can be used for flow estimation and continuous monitoring.

For batch processes, the change in level of fluid in the tank, or the rate of pumping, are convenient flow measuring methods. For large sewers, the installation of a weir or flume control section should be considered. The flume should be used in wastewaters with high suspended solids because of its self-cleaning properties. Weirs are less expensive to install than flumes but weirs require more maintenance; however, the loss in head in a flume is less than a weir. The simplest type of flume is the Palmer-Bowlus flume which is easily installed at relatively low cost.

The following flow measuring methods and devices will be discussed in more detail:

1. Flow Measuring Devices for Pipes

    a. Venturi meter

b. Flow nozzle

c. Orifice

d. Pitot tube

e. Magnetic meter

f. Rotameter

g. Elbow meter

2. Methods for Computing the Flow from Freely Discharging Pipes

a. Pipes flowing full

(1) Nozzles and orifices

(2) Vertical open-end flow

b. Pipes partly flowing full

(1) Horizontal or sloped open-end method

(2) California Pipe Method

(3) Open flow nozzles

c. Methods and Devices for Measuring the Flow in Open Channels

(1) Current meter

(2) Measuring the depth only

(3) Measuring the surface and velocity and depth

(4) Pitot tubes

(5) Weirs

(6) Flumes

3. Miscellaneous Methods

a. Dilution method

b. Bucket and stopwatch (calibrated vessel)

c. Measuring level change in tank

d. Water meters on incoming lines

e. Pumping rates

7.3 Flow Measuring Devices for Pipes

7.3.1 Venturi Meter

The venturi meter is a pipe segment consisting of a converging section, a throat, and a diverging section. An example of a venturi meter is shown in Figure 7-1. In the venturi tube, a part of the static head is transferred into velocity head. Therefore, the static head in the throat of the tube is less than the static head in the channel. This difference in head is directly related to the flow. The formula for calculating the flow in a venturi meter is as follows:

$$Q = 0.98AK\sqrt{H}$$

or

$$q = 440AK\sqrt{H}$$

where

q = volume of water, in gallons per minute
Q = volume of water, in cubic feet per second
C = discharge coefficient, approximately 0.98
A = throat area, in square feet
$H = H_1 - H_2$, differential head, in feet of water
H_1 = pressure head at center of pipe at inlet section, in feet of water
H_2 = pressure head at throat, in feet of water

$$K = \sqrt{\frac{2g}{1-\left(\frac{d_2}{d_1}\right)^4}}$$ (Obtain values of K from Fig . 7-2)

where

g = gravity constant, 32.2 ft per sec per sec
d_2 = throat diameter, in feet
d_1 = diameter of inlet pipe, in feet

Venturi tubes are frequently employed where high pressure recovery is essential or where large amounts of solids in the flow stream would tend to collect in front of an orifice plate.

By use of Figure 7-2, the flow through the meter can be calculated when the differential pressure is measured.

The meter must be installed downstream from a section of straight and uniform pipe and the required length of straight section depends on the ratio of throat diameter and pipe diameter and should be from 5 to 15 pipe diameters. Manufacturers of venturi meters will routinely size their meters for a specific use. It is important, however, that the meter be installed according to their instructions.

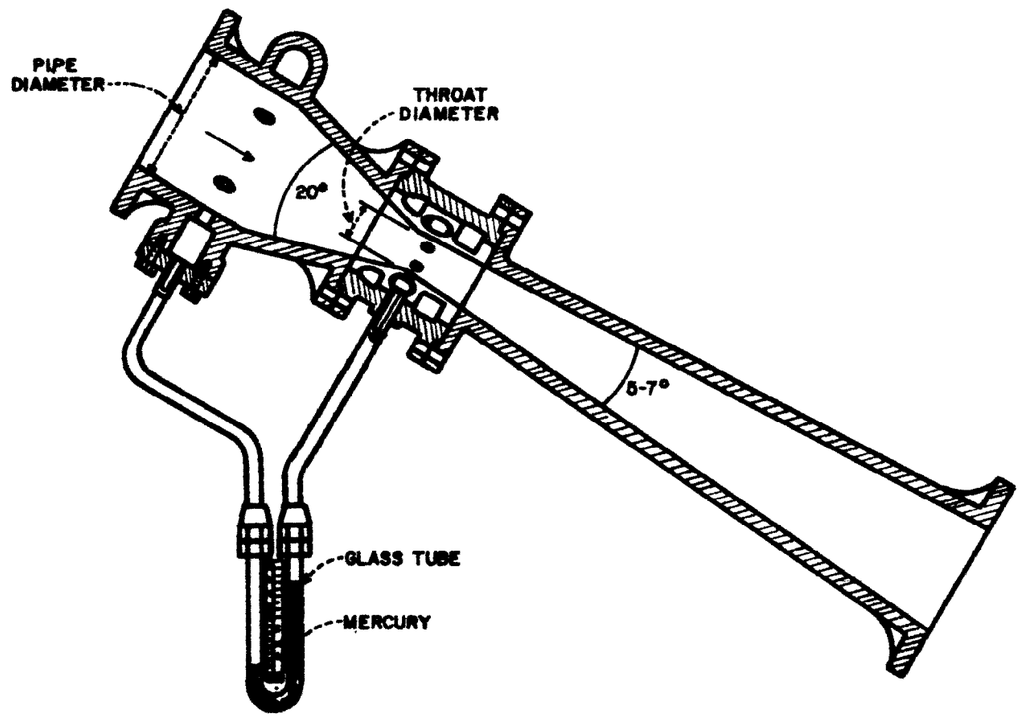

Figure 7-1. VENTURI METER (3)

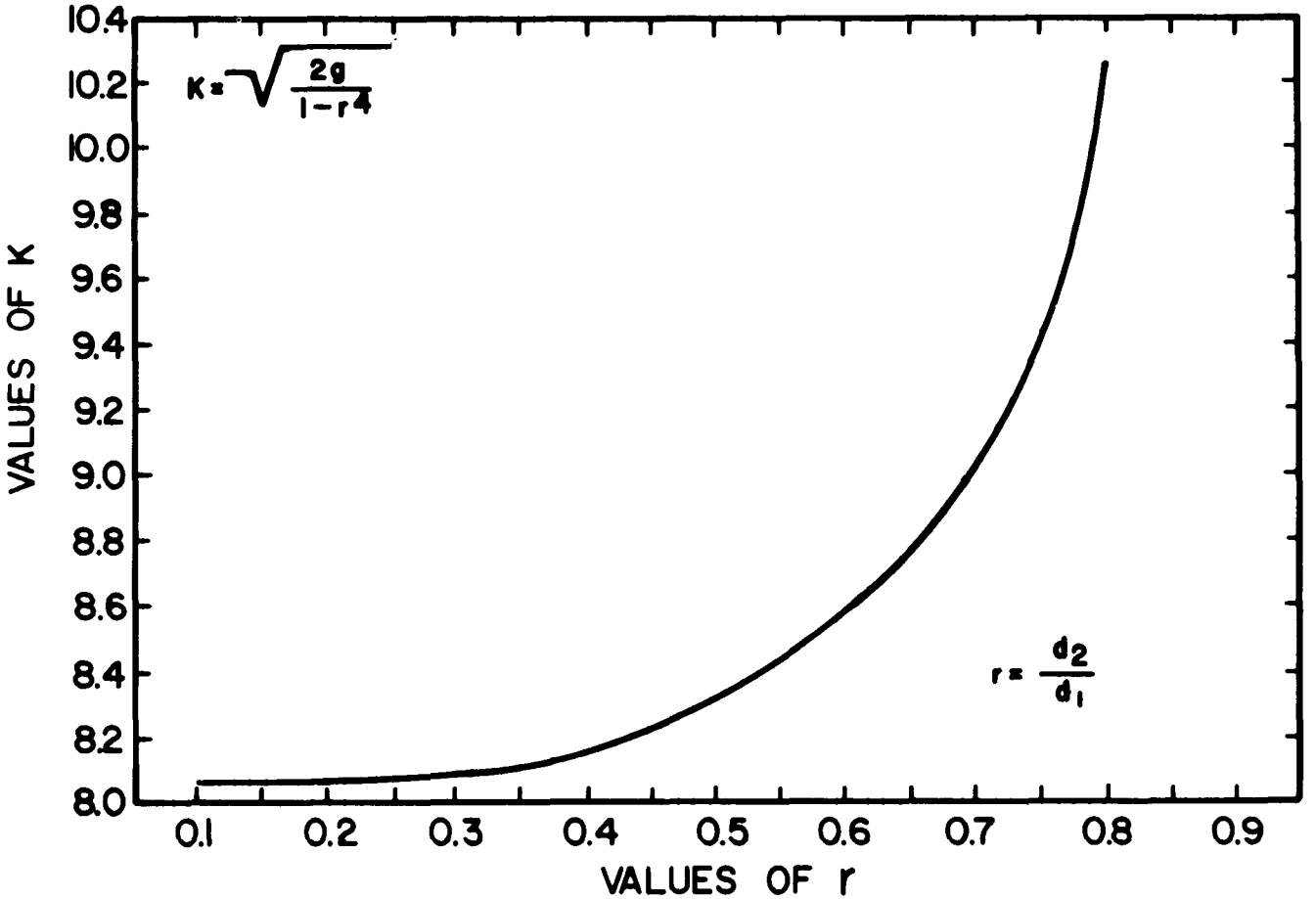

Figure 7-2. CURVE FOR DETERMINING THE VALUES OF K USED IN THE ORIFICE, VENTURI, AND FLOW NOZZLE EQUATIONS (3)

7.3.2 Flow Nozzle

A flow nozzle is a measuring device with characteristics between the venturi meter and an orifice as far as head loss and cost are concerned. The flow measuring principles are the same, inasmuch as static pressure is transferred into velocity. The flow formula for the venturi tube is also applicable to the nozzle. Flow nozzles can be used in wastewater flows containing moderate amounts of suspended solids. A number of flow nozzles are available commercially. A typical example is shown in Figure 7-3. Each manufacturer uses a slightly different nozzle form ranging from a venturi to an orifice. The characteristics of a nozzle can be predicted depending on the type of meter they resemble most: either venturi or orifice characteristics.

7.3.3 Orifice Meter

An orifice meter is a relatively inexpensive, easy to install and reliable flow measuring device, the thin plate orifice being most commonly used. Basically, an orifice is an obstacle placed in the path of flow in a pipe.

The principles of operation of an orifice are the same as for nozzles and venturi meters, the stream lines of the flow and the basic formula being similar to those of a venturi meter, i.e.,

$$Q = CAK\sqrt{H} \quad \text{(same as venturi tube)}$$

The coefficient, C, is illustrated for several forms of orifices in Figure 7-4, tabulated in Table 7-1. The nominal coefficients are applicable for relatively large orifices operating under comparatively large heads of water.

The orifice is quite useful with variations in flow accommodated by varying the throat width. The main disadvantage to the orifice is the large head loss that occurs across the section. The relative permanent pressure loss for the venturi tube, the nozzle, P/M lo-loss tube (Badger Meter Inc.) and the orifice are compared in Figure 7-5.

TABLE 7-1

DISCHARGE COEFFICIENTS FOR PRESSURE TAP-ORIFICES (2)

Orifice Diameter / Pipe Diameter d_2/d_1	Pipe Orifice C
0.2	....
0.3	0.61
0.4	0.61
0.5	0.61
0.6	0.61
0.7	0.61
0.8	0.64
0.9	0.71

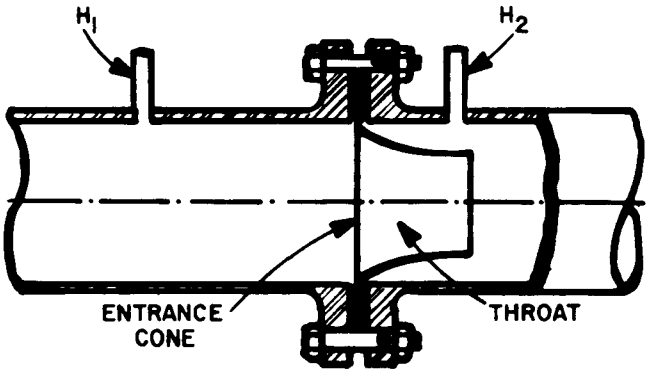

Figure 7-3. FLOW NOZZLE IN PIPE (3)

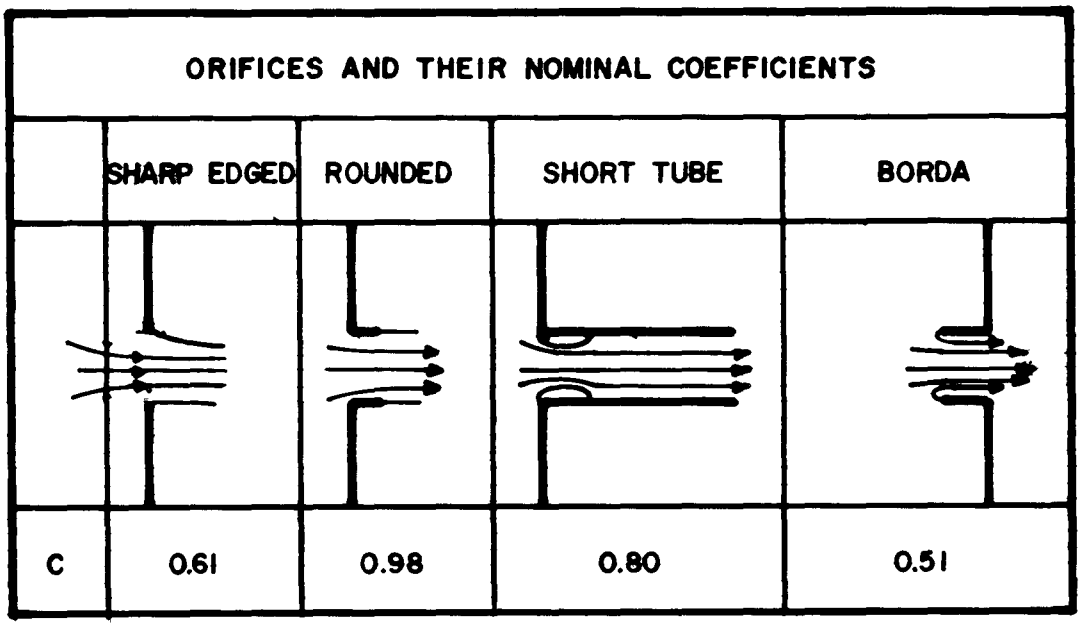

Figure 7-4. COEFFICIENTS OF SEVERAL TYPES OF ORIFICES (2)

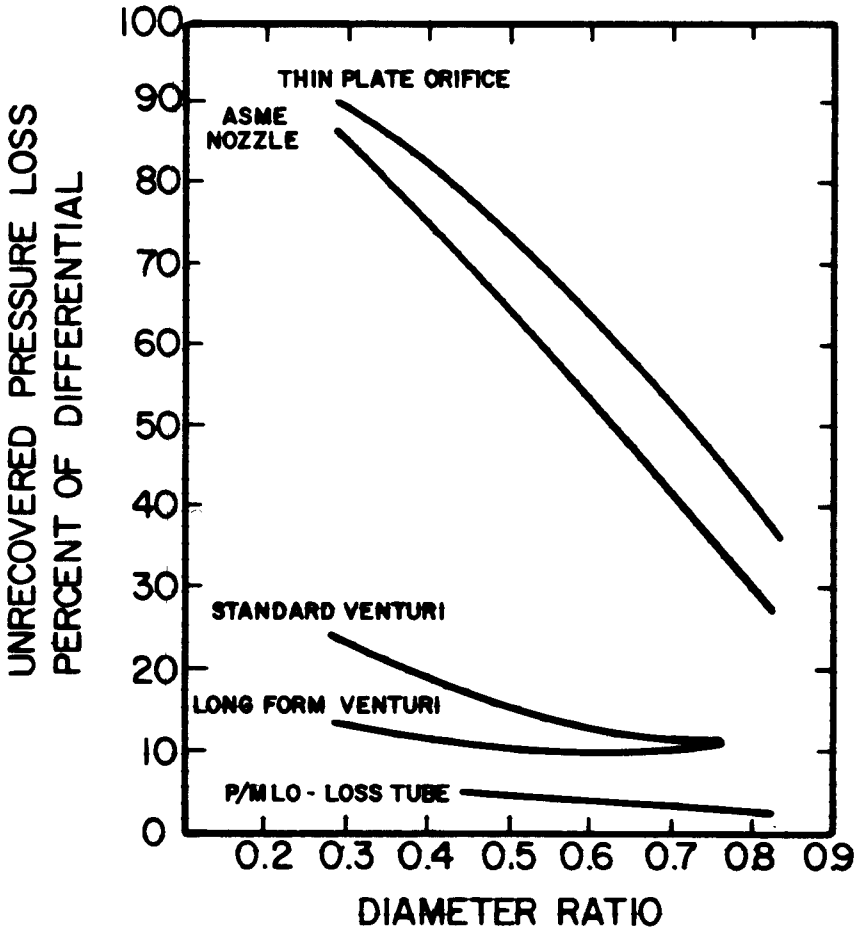

Figure 7-5. RELATIVE PERMANENT PRESSURE LOSS OF PRIMARY ELEMENTS

7.3.4 Magnetic Flow Meters

Several manufacturers supply magnetic flow meters that can be used successfully in places where other types of meters would become clogged by solids. The magnetic flowmeter operates according to Faraday's Law of Induction; the voltage induced by a conductor moving at right angles through a magnetic field will be proportional to the velocity of the conductor through the field. In the magnetic flowmeter, the process liquid is the conductor, and a set of electro-magnetic coils in the flowmeter produces the field. The induced voltage is drawn off through the flowmeter electrodes which are in contact with the liquid, and then transmitted to a converter for signal conditioning. A magnetic flow meter is shown in Figure 7-6.

In a given meter, the induced voltage is a function only of liquid velocity, and is not affected by temperature, viscosity, turbulence, or conductivity (above a minimum threshold of 5 micro-ohms). For liquids with conductivity values of 0.1 to 5 micro-ohms, a special signal converter is needed. When the pipe diameter and measuring the average velocity are known, the flow rate can be determined. The magnetic flow meter can be used in pipes with a diameter as small as 0.1 inch.

The accuracy of the meter increases with increases in velocity, a one percent accuracy being obtainable for flow velocities from 3 to 30 feet per second. The magnetic flow meter does not result in head loss, the pressure loss is no greater than for flow through an equivalent length of straight pipe.

7.3.5 Pitot Tube

A schematic diagram of a simple pitot tube is shown in Figure 7-7. In operation, the velocity of the flow is calculated from the difference in head measured on the manometer. The pressure in the left tube measures the static pressure in the pipe and the right tube measures the stagnation pressure, or the pressure where the velocity is zero. Commercially available pitot tubes consist of a combined piezometer and total head meter. Pitot tube measurements should be made in a straight section upstream free of valves, tees, elbows, and other fittings with a minimum distance of 15 to 50 times the pipe diameter. When a straight section is not possible, a velocity profile should be determined experimentally. Pitot tubes are not practical for use with liquids with large amounts of suspended solids because of the possibility of plugging. In large pipes, the pitot tube is one of the most economical means of measuring flows.

7.3.6 Rotameters

Rotameters are tapered tubes in which the fluid flows vertically upward. A metal float in the tube comes to equilibrium at a point where the annular flow area is such that the velocity increase has produced the necessary pressure difference. Rotameters are simple, inexpensive and accurate devices for measuring relatively small rates of flow of clear, clean liquids. For this reason they are often used to measure the water rate into individual processing steps in manufacturing operations. To maintain accuracy in a rotameter, it is absolutely essential that both the tube and float be kept clean.

7.4 Methods for Computing the Flow from Freely Discharging Pipes

7.4.1 Pipes Flowing Full

7.4.1.1 Orifice

An orifice or nozzle can be located at the end of a fully flowing freely discharging pipe and the equations for the previously discussed orifice and nozzle will apply. However, since the static pressure at the downstream end of the orifice or nozzle is atmospheric, only one upstream pressure measurement is required.

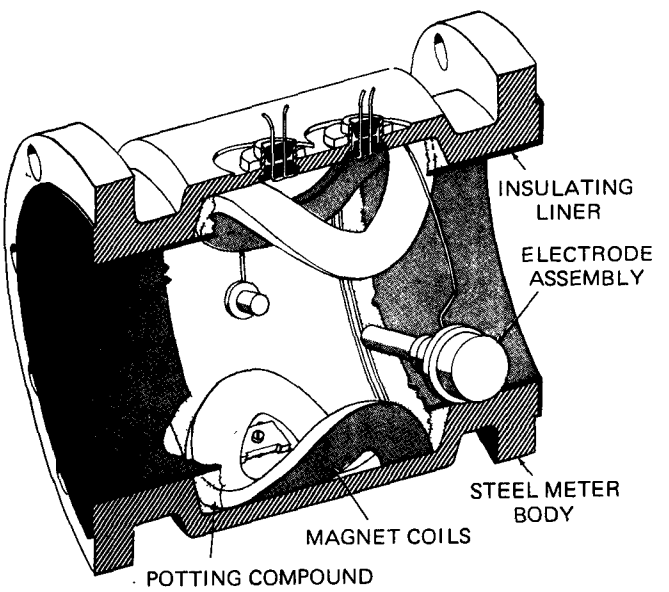

Figure 7-6. MAGNETIC FLOW METER (10)

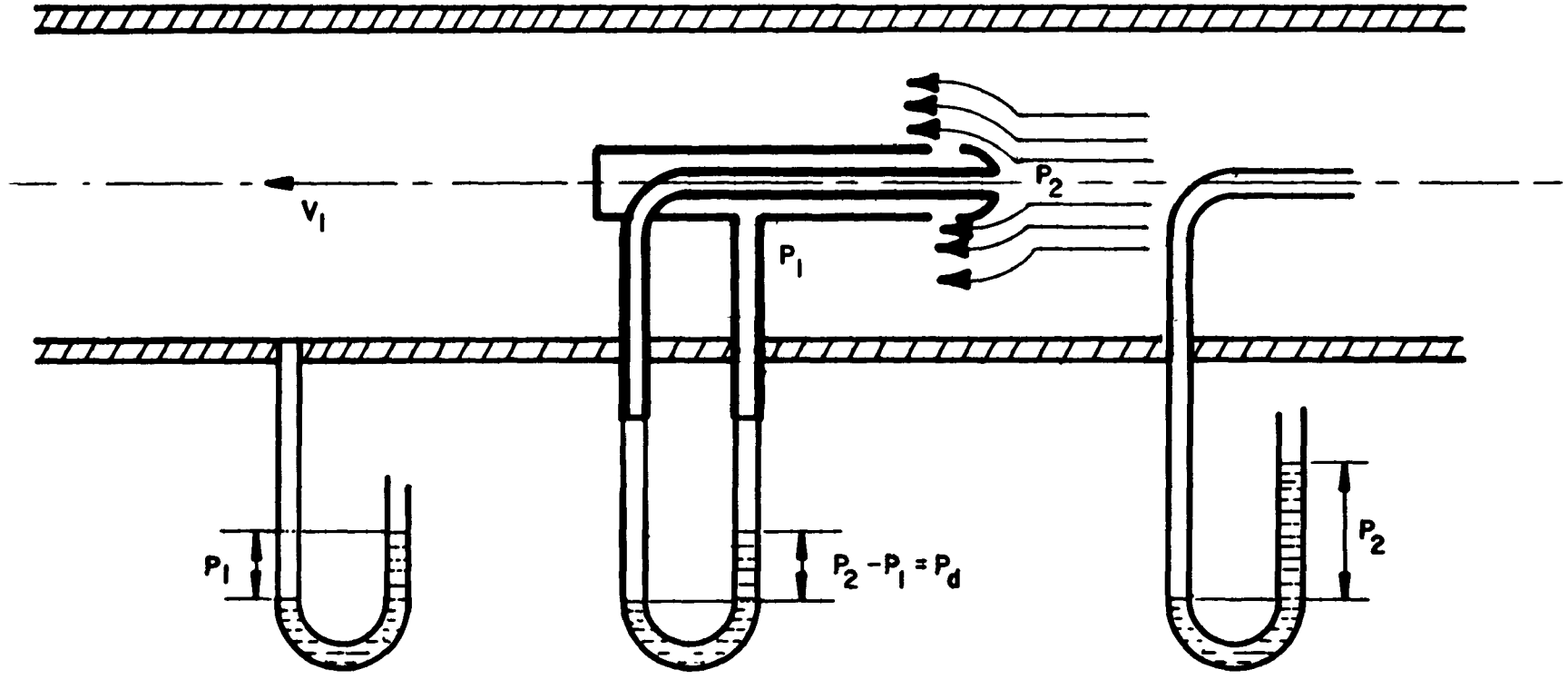

Figure 7-7. PITOT TUBE MEASURES VELOCITY HEAD

7.4.2 Pipes Flowing Partly Full

7.4.2.1 Horizontal or Sloped Open-End Pipe

It is possible to estimate the flow from filled or partly filled pipes by measuring two characteristic lengths of the stream after it has left the pipe and is freely discharging into the air. This situation is common for the outfall of elevated sewers. The method lacks the precision and accuracy of conventional meters or weirs but is often sufficiently accurate for rough flow estimates and is relatively inexpensive. Figure 7-8 shows a partly filled sewer freely discharging into the air. The two characteristic lengths to be measured are X and Y. The X-axis should always be parallel to the line of the sewer and the Y-axis should be perpendicular to the ground. The formula for calculated flow is:

$$Q = \frac{1800A\,X}{\sqrt{Y}} \quad \text{in gallons per minute}$$

where

A = wet cross-sectional area of liquid in the pipe in sq ft

X = distance between end of pipe and the vertical gage in ft, measured parallel to the pipe

Y = vertical distance from water surface at discharge end of the pipe and intersection of water surface with vertical gage in ft

When the pipe is flowing full, A equals the cross-sectional area of the pipe. A modification of this method is shown in Figure 7-9 where Y is measured from the mid-depth of the liquid and is equal to 1 ft. X is measured to the center of the stream, and the velocity of the liquid leaving the sewer is:

$$V = 4.0\,X \text{ in feet per second}$$

The flow of water discharged from the pipe is determined from:

$$Q = 450\,AV = \text{gallons per minute}$$

where A is the wet cross-sectional area in sq ft. This method is known as the coordinate or trajectory method.

7.4.2.2 California Pipe Method

The California Pipe Method is used to measure the rate of flow in a partly filled horizontal pipe having free discharge. The horizontal part of the pipe should be at least 6 times the diameter. If the pipe is not horizontal, a horizontal section can be added as shown in Figure 7-10. Once the diameter of the pipe is known, only the distance from the top of the sewer to the water surface is required in order to obtain the flow rate. The outfall depth is related to the critical depth, thus making the flow determinable. The flow may be calculated by the following equation:

$$Q = TW = \text{gallons per minute}$$

where:

$T = 3{,}900\ (1 - \frac{a}{d})^{1.88}$

d = diameter of sewer, in ft

a = d minus water depth, in ft

$W = d^{2.48}$

Values for T and W may be obtained from Tables 7-2, 7-3. An air bubbler or a water level recorder may be used for the continuous measurement of the water surface elevation.

TABLE 7-2

VALUES OF T FOR CALIFORNIA PIPE FLOW FORMULA (4)

$$T = 3900\ (1 - \frac{a}{d})\ 1.88$$

$\frac{a}{d}$	T	$\frac{a}{d}$	T	$\frac{a}{d}$	T
0.00	3900	0.35	1740	0.70	410
0.01	3830	0.36	1690	0.71	380
0.02	3760	0.37	1640	0.72	360
0.03	3690	0.38	1590	0.73	330
0.04	3610	0.39	1540	0.74	310
0.05	3540	0.40	1490	0.75	290
0.06	3470	0.41	1450	0.76	270
0.07	3400	0.42	1400	0.77	250
0.08	3330	0.43	1350	0.78	230
0.09	3260	0.44	1310	0.79	210
0.10	3200	0.45	1270	0.80	100
0.11	3130	0.46	1230	0.81	170
0.12	3070	0.47	1180	0.82	160
0.13	3000	0.48	1140	0.83	140
0.14	2930	0.49	1100	0.84	125
0.15	2870	0.50	1060	0.85	110
0.16	2810	0.51	1020	0.86	97
0.17	2750	0.52	930	0.87	85
0.18	2690	0.53	915	0.88	73
0.19	2630	0.54	905	0.89	61
0.20	2570	0.55	870	0.90	51
0.21	2510	0.56	830	0.91	42
0.22	2450	0.57	800	0.92	34
0.23	2390	0.58	760	0.93	26
0.24	2330	0.59	730	0.94	20

TABLE 7-2 (Continued)

VALUES OF T FOR CALIFORNIA PIPE FLOW FORMULA (4)

$$T = 3900 \left(1 - \frac{a}{d}\right) 1.88$$

$\frac{a}{d}$	T	$\frac{a}{d}$	T	$\frac{a}{d}$	T
0.25	2270	0.60	700	0.95	14
0.26	2210	0.61	660	0.96	9
0.27	2160	0.62	630	0.97	5
0.28	2100	0.63	600	0.98	3
0.29	2050	0.64	570	0.99	1
0.30	1990	0.65	540		
0.31	1940	0.66	510		
0.32	1890	0.67	480		
0.33	1840	0.68	460		
0.34	1790	0.69	430		

TABLE 7-3

VALUES OF W FOR CALIFORNIA PIPE FLOW FORMULA (4)

$$W = d^{2.48}$$

Pipe Diameter - Inches	d feet	W
3	0.25	0.032
4	0.33	0.064
6	0.50	0.179
8	0.67	0.370
10	0.83	0.630
12	1.00	1.00
14	1.17	1.48
15	1.25	1.74
16	1.33	2.03
18	1.50	2.73
20	1.67	3.57
21	1.75	4.01
22	1.83	4.48
24	2.00	5.58
27	2.25	7.47
30	2.50	9.70
33	2.75	12.29
36	3.00	15.25

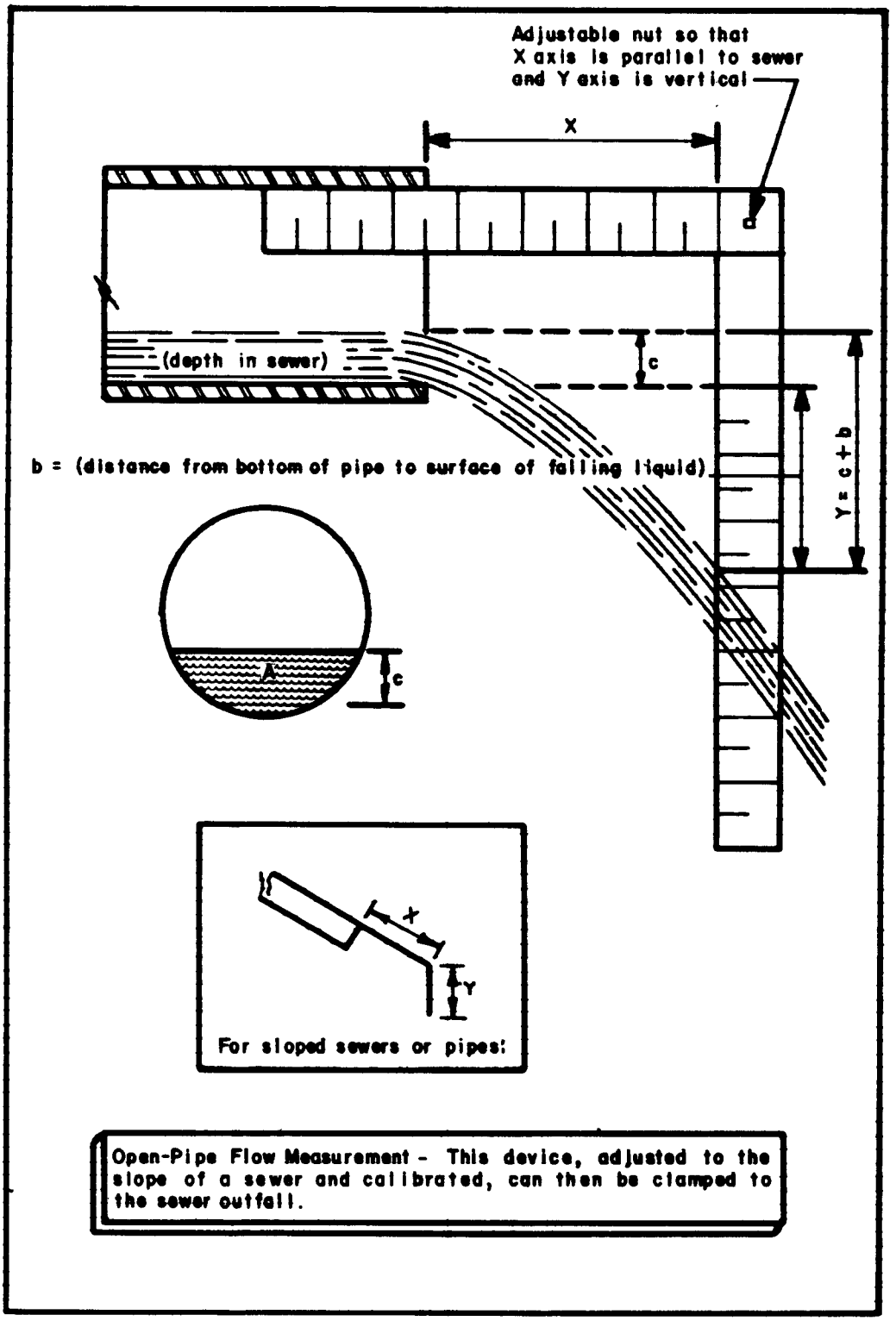

Figure 7-8. OPEN PIPE FLOW MEASUREMENT (4)

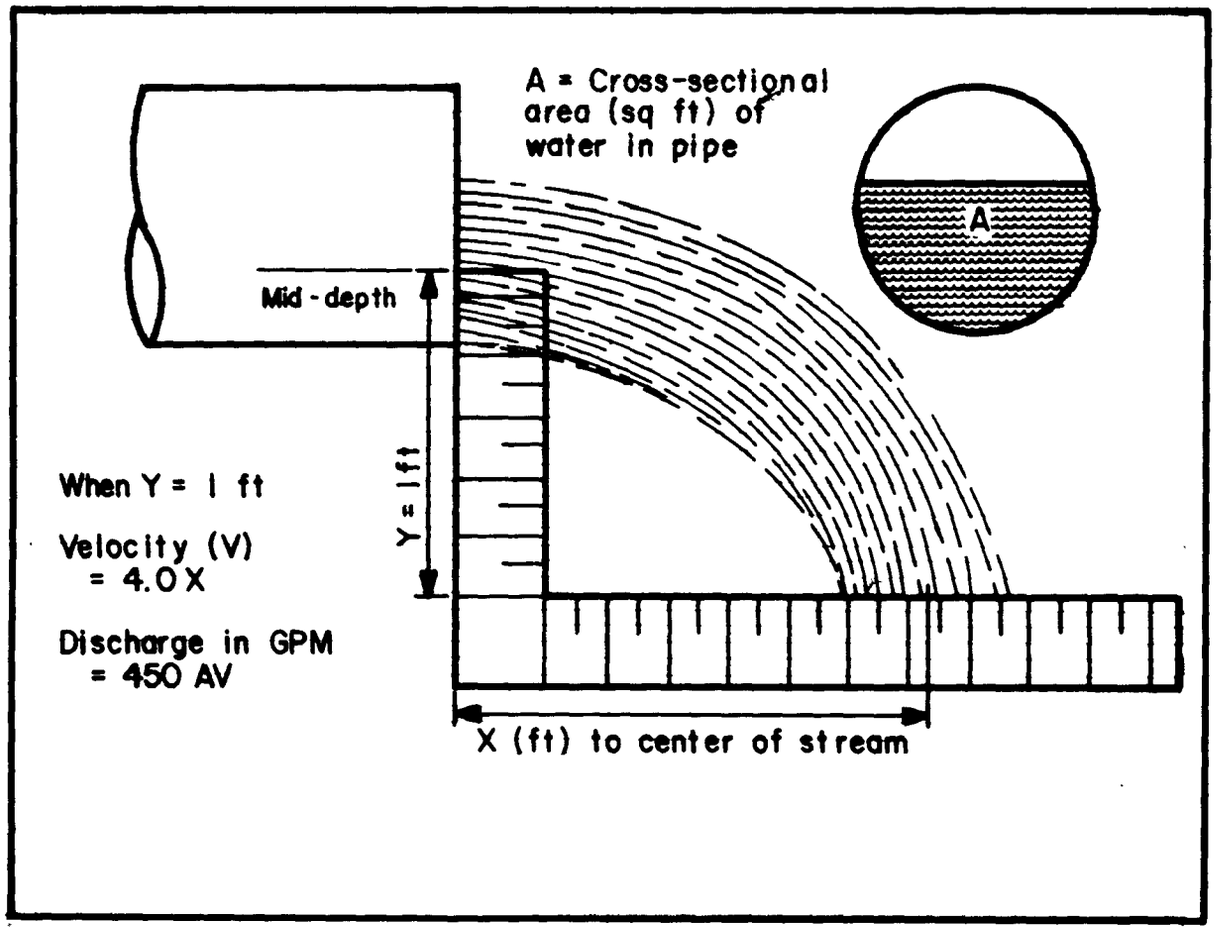

Figure 7-9. HOW TO MEASURE DISCHARGE FROM A PIPE (4)

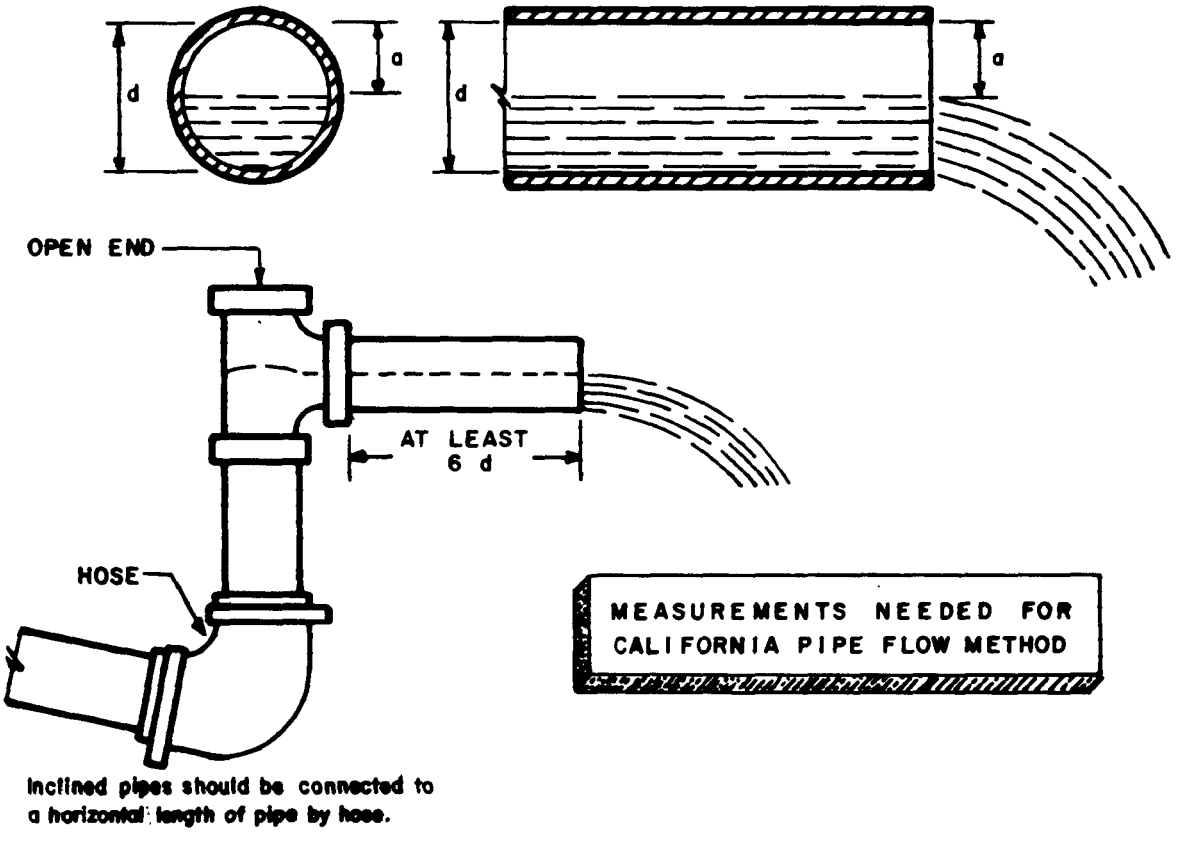

Figure 7-10. CALIFORNIA PIPE FLOW METHOD (4)

7.4.2.3 Open Flow Nozzles

For accurate and continuous measurement of flow, the open flow nozzle (See Figure 7-11) is quite practical. Two common types of open flow nozzles are the Kennison nozzle and the parabolic flume. These nozzles are attached to the end of the pipe or channel. Each nozzle is rated according to the relationship between the water level in the nozzle and the flow. These devices can register the flow continuously by placing a float in the nozzle which is connected to a recorder. Table 7-4 tabulates the dimensions and approximate maximum capacities for various sizes of parabolic flumes and Kennison nozzles.

TABLE 7-4

OPEN FLOW NOZZLES - DIMENSION AND APPROXIMATE CAPACITIES

Nozzle Diameter (Inches)	Nozzle Length (Inches)		Capacity (Gallons per min)	
	Parabolic	Kennison	Parabolic	Kennison
6	28	12	190	190
8	35	16	395	313
10	43	20	675	587
12	50	24	1040	869
16	66	32	2030	1880
20	81	40	3410	3130
24	96	48	5190	5180
30	119	60	8700	8050
36	142	72	13500	13500

7.5 Methods and Devices For Measuring the Flow in Open Channels

Various methods for measuring flow in open channels may be used depending on the geometry of the sewer, accessibility, and the range of expected wastes flows. Common methods of measuring open channel flow include the current meter, depth measurement, velocity and depth measurement, pitot tubes, weirs, flumes, dilution method, bucket and stopwatch, tank level, water meters, and pumping rates.

7.5.1 Current Meter

The current meter is a device consisting of a rotating element whose speed of rotation varies with velocity of flow. Current meters must be calibrated, the calibration table usually being provided with the instrument.

The current meter may be used to measure the velocity of flow in both open and closed channels and measures an approximate average velocity when placed at a depth of 0.6 below the water surface in an open channel. Another widely used method to obtain an average flow is to take the average of the velocity at 0.2 depth and 0.8 depth. It is recommended that the velocity be measured at several places within the cross-sectional area. The current meter is useful in cases where insufficient head would preclude the use of a weir; however, the depth in the sewer must be sufficient to permit the use of the meter.

7.5.2 Measuring Depth Only

When the slope and coefficient of roughness are known, the Manning formula can be used to roughly estimate flows by measuring the depth alone.

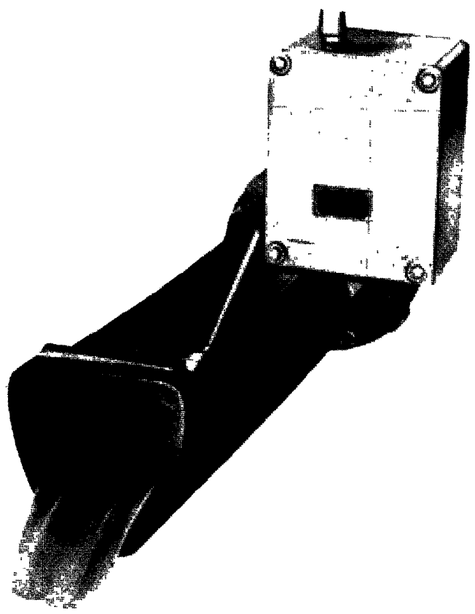

Figure 7-11. OPEN FLOW NOZZLE WITH INSTREAM TRANSMITTER

7.5.3 Measuring the Surface Velocity and Depth in Partly Filled Sewers

When the wet cross-sectional area and the average velocity are known, flow in a sewer may be obtained by the formula Q = AV. The wet area is determined by measuring the depth, and the average velocity can be estimated by measuring the surface velocity. Fortunately, a relatively constant relationship exists between the surface velocity and the average velocity of a stream, the average velocity being approximately 85 percent of the surface velocity. The surface velocity can be measured by placing floating material in the sewer and measuring the time it takes for the float to pass a measured distance downstream. Any floating material can be used, such as cork, wood, oranges, or a stoppered bottle. A straight length of sewer line, free of obstructions, will give fairly good results. The process should be repeated 4 to 5 times and the average surface velocity obtained. If time differences between runs vary considerably, about 20 to 30 floatings should be made in order to obtain a distribution curve. The mean of this curve should then be used in determining the mean surface velocity. The depth and velocity of flow should be measured simultaneously and the wet cross sectional area can be obtained from the depth measurement by using Figure 7-12. This method is not very accurate but is useful in the preliminary surveys so that the size of required flow measuring devices can be determined. When the sewer is flowing too full to use a weir, this method is probably the most practical.

7.5.4 Pitot Tube

The pitot tube can be used to measure the velocity flow in an open channel. For locations where velocity is to be measured, the same considerations should be taken into account as with the current meter. The pitot tube indicates a head reading of about 0.2 inch for a velocity of 1 fps, the prime limitation being inaccurate readings in sewers with low flow velocities.

7.5.5 Weirs

The weir is a commonly used device for measuring waste flows inasmuch as it is generally easy to install at low cost. Essentially, it is a dam, or other obstruction placed in a partly filled pipe, channel or stream. The water level at a given distance upstream from the weir is proportional to the flow. Commercially available weirs consist of a vertical plate with a sharp crest, the top of the plate being either straight or notched. Weirs can be installed at pipe outlets, in manholes or in open drains. Figure 7-13 shows three common types of sharp crested weirs with complete end contractions while Figure 7-14 shows a sharp crested weir profile. Proper form of the crest is important for accurate measurements, the water flowing over the crest being called the nappe. The main problem associated with rectangular weirs is that the flow will be contracted when it passes over the weir. Thus, the effective width of the weir is smaller than the width of the crest. The Cipolletti weir, which has sloping sides, was developed in order to compensate for this contraction and to be able to use the width of the crest for flow calculation. In order to design a weir that operates satisfactorily, the following general requirements should be considered:

1. The weir should consist of a thin plate about 1/8 to 1/4 inch thick with a straight edge or a thick plate with a knife edge, the sharp edge being important for preventing the nappe from adhering to the crest. The height of the weir from the bottom of the channel to the crest should be at least 2 times the expected head of water above the crest, this ratio being necessary to lower the velocity of approach. Also, the upstream velocity of flow should be greater than 0.3 ft/sec.

2. It is important to ventilate the weir to prevent a vacuum from forming on the underside of the falling water.

3. The connection of the weir to the channel should be waterproof. Therefore, the joint between

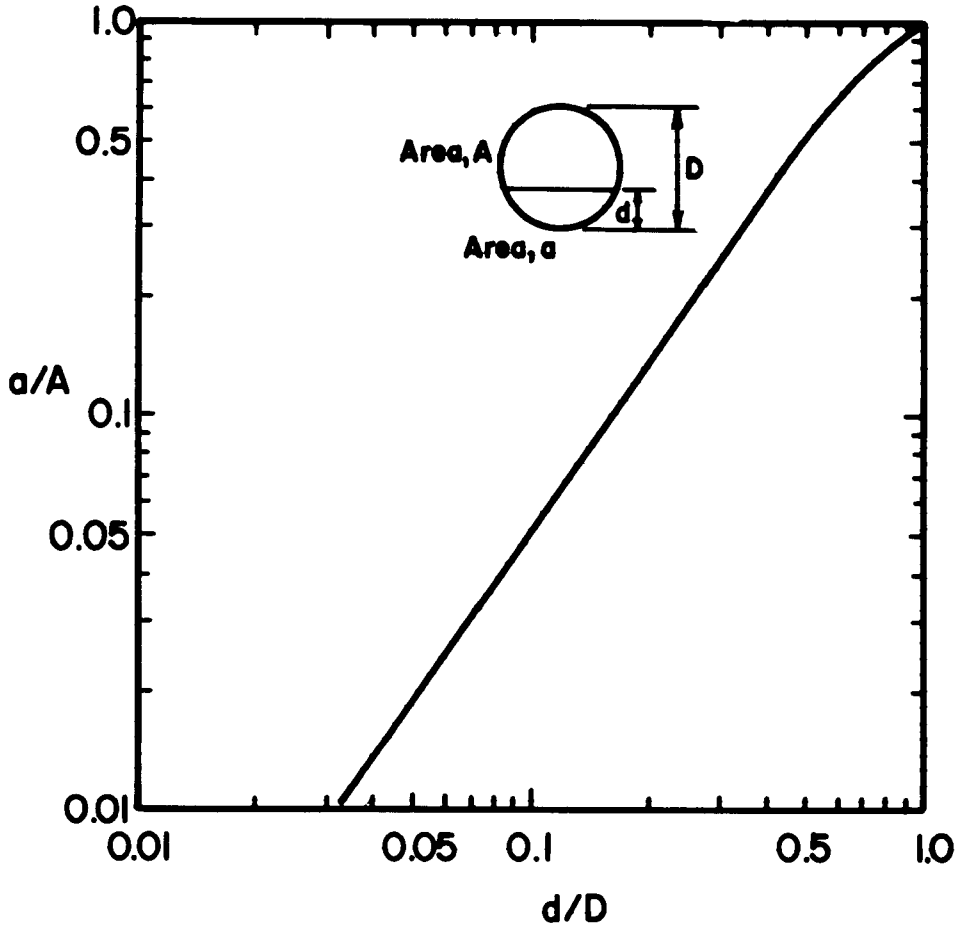

Figure 7-12. DETERMINATION OF WASTE FLOW IN PARTIALLY FILLED SEWERS (5)

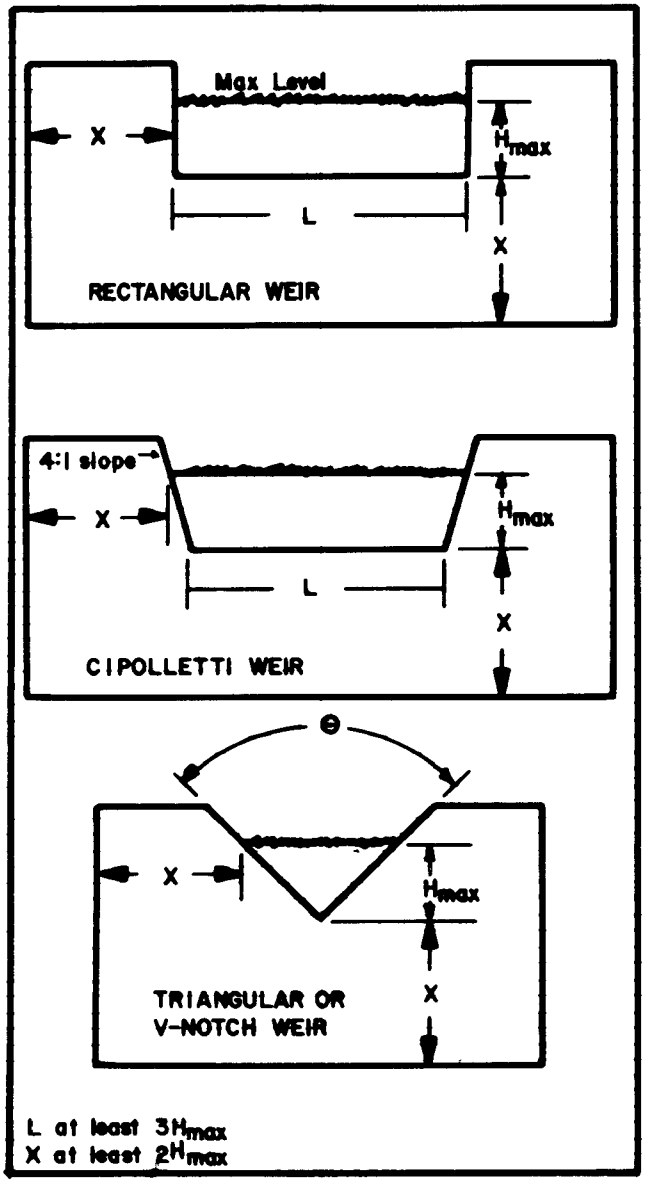

Figure 7-13. THREE COMMON TYPES OF SHARP-CRESTED WEIRS

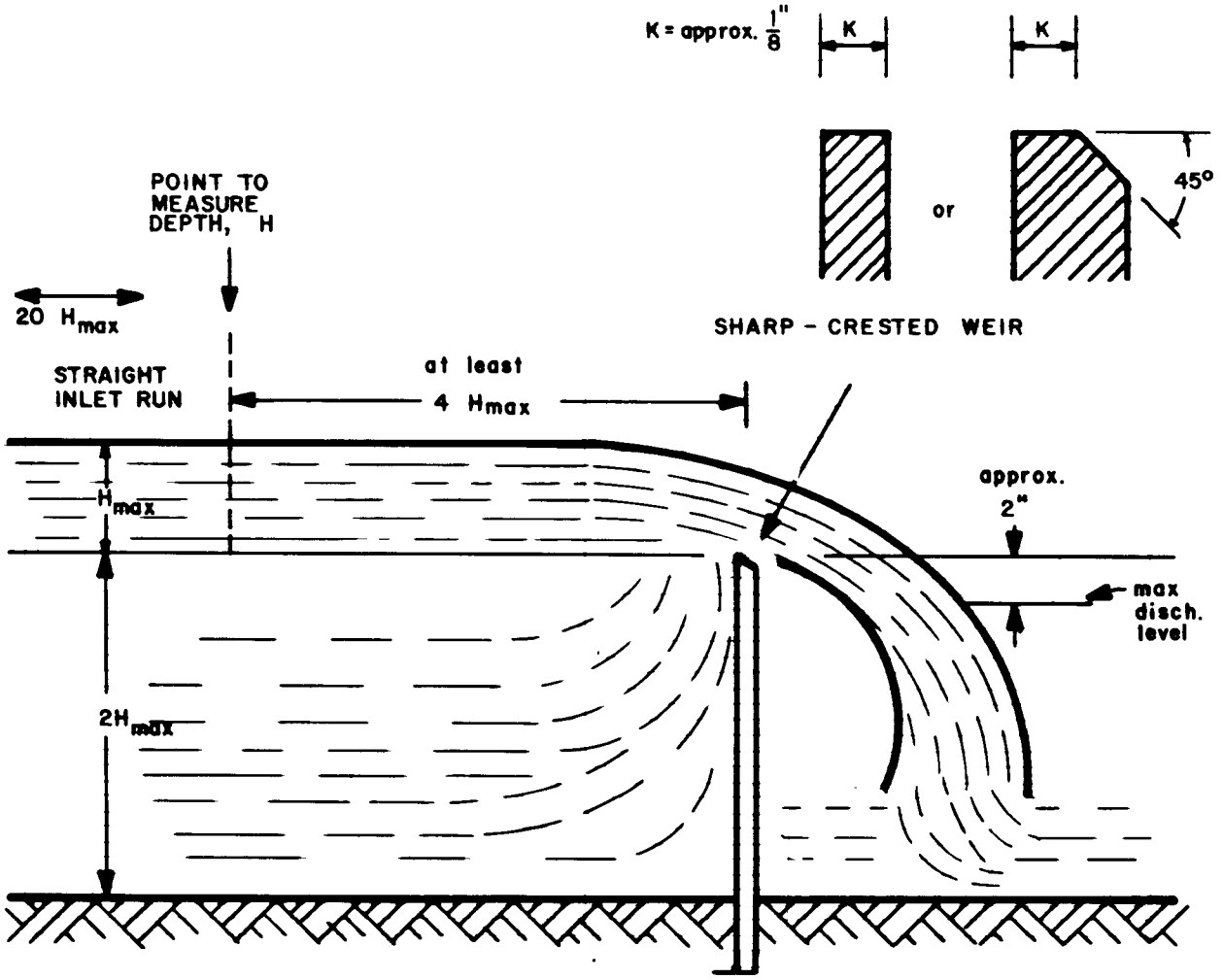

Figure 7-14. PROFILE OF SHARP-CRESTED WEIR

the weir plate and channel should be packed with a chemically inert cement or asphalt type roofing compound. Grease compounds should not be used if oil concentrations are to be measured.

4. The weir must be exactly level to insure a uniform depth of flow.

5. The crest of the weir must be kept clean. Fibers, stringy materials and larger particles tend to cling to the crest and should be removed periodically. In water with high suspended solids concentrations, considerable sedimentation in the channel of approach will take place. Sediment influences the measurements and makes representative sampling more difficult.

6. The device for measuring the head should be placed upstream at a distance of at least 2.5 times the head on the weir and should be located in a quiet section of the sewer away from all disturbances.

7. The weir should be located at the end of a straight stretch of the sewer with little or no slope. The velocity of approach should be low and uniformly divided over the channel; however, the weir will usually lower the velocity sufficiently for measurement. For added accuracy, and when the sewer is flowing full, the weir should be placed at the end of the line in a weir stilling box as shown in Figure 7-15. However, for fully flowing sewers, other methods of flow measurement are recommended. It should be noted that the velocity distribution along a channel can be made more uniform by placing baffles in the sewer upstream in the channel of approach.

8. The weir size should be selected after the preliminary surveys have determined the expected flow rates in the sewer.

The common formula for flow over a weir is:

$$q = 2/3 \sqrt{2g}\ H^{3/2}$$

where:

q = flow per unit of width, cfs

g = gravity (32 ft/sec^2)

H = head above crest (upstream), feet

A coefficient C, is usually included to compensate for the non-uniformity of flow. Thus, the equation for the flow per unit of width becomes:

$$q = C_w\, 2/3 \sqrt{2g}\ H^{3/2}$$

where:

C_w = non-uniformity coefficient (≤ 1)

Permanently installed weirs should be calibrated after installation inasmuch as coefficients in the weir formulas may vary due to many factors. However, reasonable flow estimates for the various types of weirs are available, and when used properly, produce little error.

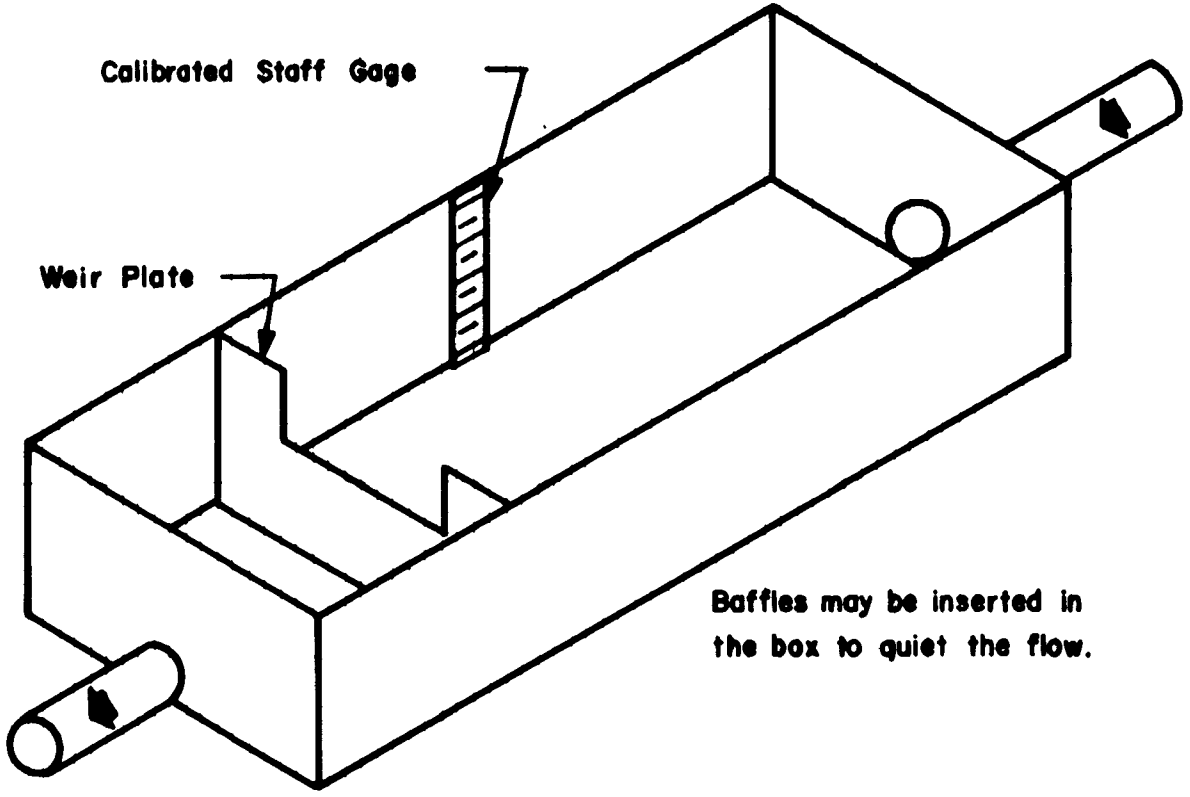

Typical weir-stilling box. Dimensions can be varied to suit plant conditions so long as quiet flow can be effected.

Figure 7-15. WEIR STILLING BOX (4)

7.5.5.1 Rectangular Weirs

Rectangular weirs may be straight or notched. A straight weir is called a suppressed weir without end contractions. A notched weir may have one or two end contractions. If the crest height is greater than 5 H, the approach velocity may be neglected. In a suppressed weir, the water flows over the full width of the weir and problems may develop when a vacuum forms under the nappe.

The most common type of rectangular weir is the notched weir with end contractions. If the end contractions are standard, that is, the width of each end contraction is at least 2.0 times the head above the crest, the Francis formula is applicable in computing the flow as follows:

$$Q = 3.33\ LH^{3/2}$$

where:

Q = flow, cfs

L = effective width of the weir, ft

H = head, ft

Figure 7-16 presents a nomograph of the Francis Formula and can be used for a suppressed weir or a weir with standard end contractions. The conventional calculations are not applicable when estimating discharges with very low heads that cause the nappe to cling to the weir face.

7.5.5.2 Cipolletti Weir

The Cipolletti weir is of trapezoidal form with end slopes of one horizontal to four vertical, which corrects for the slide contraction of the nappe over the crest. Thus, no correction is necessary for the crest width as in the rectangular contracted weir. The general equation for the Cipolletti type of weir is:

$$Q = 3.367\ L\ H^{3/2}$$

where:

Q = discharge, cfs

L = length of the weir opening at the base, feet

H = measured head, feet

7.5.5.3 Velocity Head Correction

When the velocity of approach for a suppressed, contracted, or Cipolletti weir is too high to neglect, a correction factor can be introduced into the flow equation. The correction factor extends the use of the basic formula for weirs to include the velocity head as follows:

$$h = \frac{V^2}{2g}$$

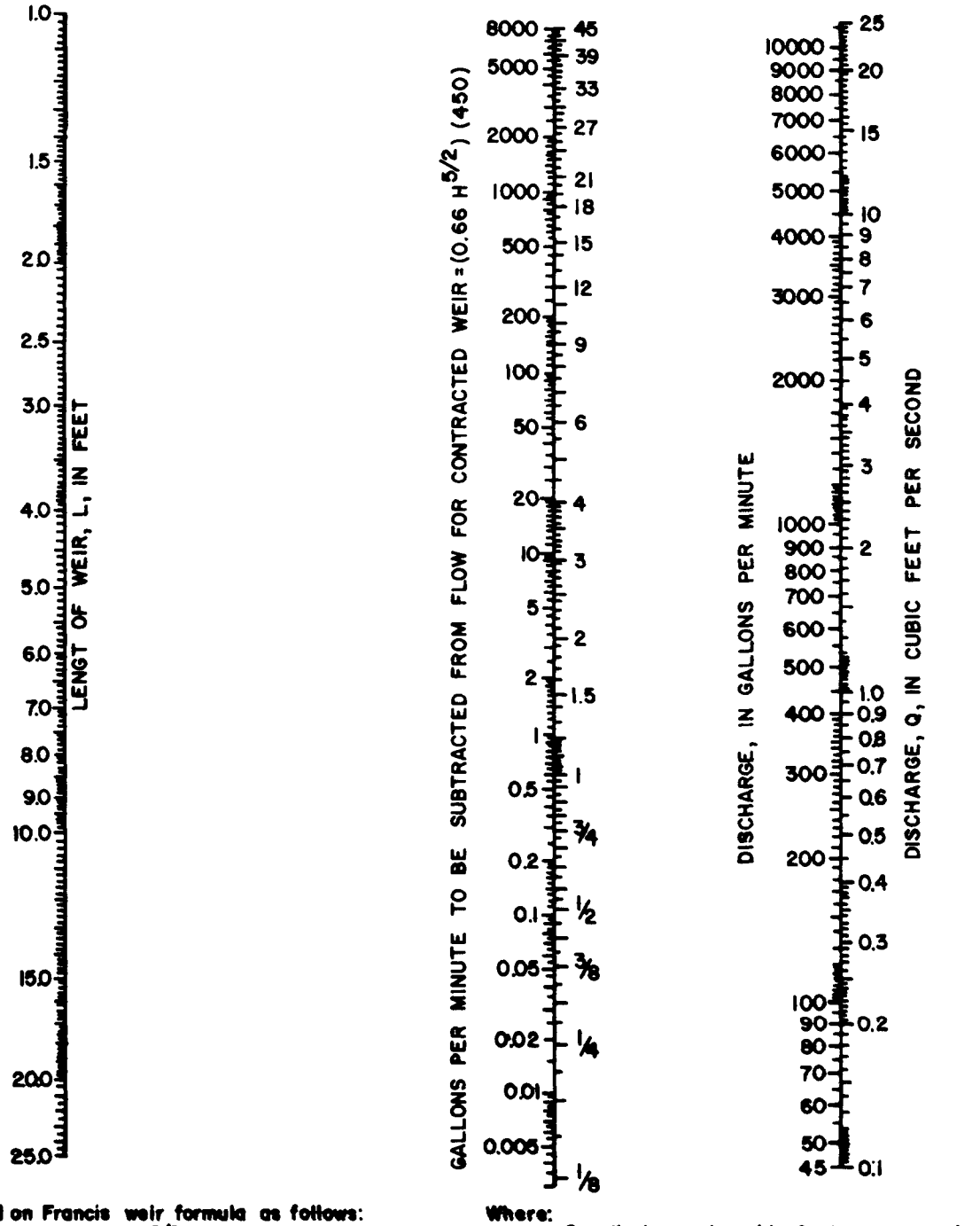

Note: Based on Francis weir formula as follows:

$Q = 3.33\,LH^{3/2}$ (for suppressed weir)

or

$Q = 3.33\,(L-0.2H)\,H^{3/2}$

$= 3.33\,LH^{3/2} - 0.66\,H^{5/2}$ (for contracted weir with two end contractions)

Where:

Q = discharge, in cubic feet per second.

L = length of weir, in feet.

H = head in feet.

Figure 7-16. NOMOGRAPH FOR CAPACITY OF RECTANGULAR WEIRS (3)

where:

h = velocity head, ft

V = approach velocity, ft/sec

g = gravity (32 ft/sec^2)

Then the term $H^{3/2}$ in the basic equations is converted to

$$H^{3/2} = (H + h)^{3/2} - h^{3/2}$$

7.5.5.4 Triangular Weirs

The triangular weir of V-notch type is of value in measuring low flows. It should be used for flows less than 1 cfs (450 gpm) and is not recommended if the flow is greater than 2 cfs. The V-notch weir may be constructed of any angle, the most commonly used angle, 0, for V-notch weirs being 90°. The second most popular V-notch weir has an angle of 60°. The end contraction of the weir should be at least 3/4 L, where L is the width of the water surface at maximum elevation. (Figure 7-17).

The formula for the 90° notch weir is:

$Q = 2.49\ H^{2.5}$ where flow, Q, is in cfs

The API manual (3) recommends against the use of V-notch weirs if H<0.3 ft, since the possibility of forming a vacuum becomes too great. Table 7-5 gives the minimum discharge without forming a vacuum for heads lower than 0.3 ft.

TABLE 7-5

PRACTICAL MINIMUM DISCHARGE FOR 90-DEGREE V-NOTCH WEIRS (3)

Weir Head (ft)	Discharge (gpm)
0.02	0.049
0.03	0.160
0.04	0.380
0.05	0.755
0.075	1.964
0.10	4.00
0.15	10.47
0.20	20.95
0.25	35.45
0.30	55.50

7.5.5.5 Broad-Crested Weir

The flow formula for a broad crested weir is:

$$Q = 2/3\ L \sqrt{2g}\ E^{3/2}$$

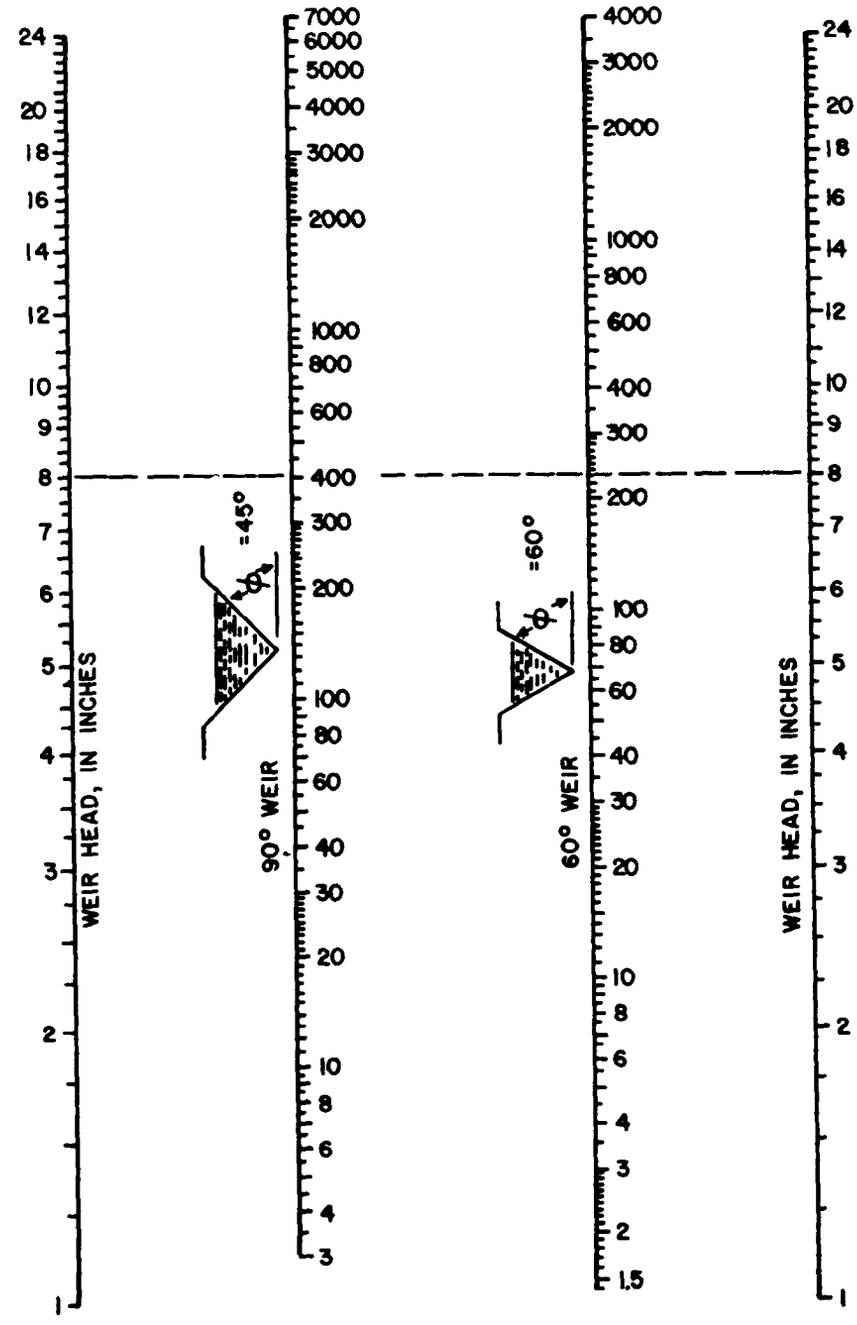

Figure 7-17. FLOW RATES FOR 60° AND 90° V-NOTCH WEIRS (3)

where:

Q = Flow, cfs

L = length of weir crest

$E = H + \frac{V^2}{2g}$

The term $V^2/2g$ can be neglected for low approach velocities. This type weir is usually built of concrete. The advantage of the broadcrested weir is that the surface elevation upstream is not influenced by the downstream water surface, thus it operates accurately with submerged flow.

7.5.6 Flumes

7.5.6.1 Parshall Flume

The Parshall flume is a convenient device for measuring the flow in existing sewers and consists of three parts; a converging section, a throat section, and a diverging section. The dimensions and capacities of Parshall flumes are shown in Figure 7-18. The level of the floor in the converging section is higher than the floor in the throat and diverging sections. The head of the water surface in the converging section is a measurement of the flow through the flume.

The elevation of the water surface should be measured back from the crest of the flume at a distance equal to 2/3 of the length of the converging section. The crest is located at the junction of the throat and converging section. The head should be measured in a stilling well instead of in the flume itself as sudden changes in flow are dampened in a stilling well. The size of the Parshall flume should be determined during the preliminary survey. The general formula for computing the free discharge from a Parshall flume is as follows:

$Q = 4 W H^n$

where:

Q = discharge, cfs

W = throat width, ft

H = head of water above the level floor in ft in the converging section

$n = 1.522 W^{0.026}$

The flume may be built of wood, fiberglass, concrete, plastic or metal and can be installed at convenient locations, such as a manhole. The Parshall flume is used for sewer lines where continuous-flow measurements are desirable. The main advantage of the Parshall flume over a weir is the self cleaning properties of the flume. Accurate measurements can be made even if the flow is submerged as shown by the water levels in Figure 7-19.

The flow can become submerged due to high water elevations downstream. If the flow is submerged, a velocity reduction in the flow occurs. The degree of submergence must be determined in order to measure the flow accurately since the flume is calibrated for free flow conditions. The condition of submerged flow is evidenced by a ripple or wave formed just downstream from the end of the throat. A reduction in the velocity of the water leaving the flume may lessen the effects of erosion downstream. In order to

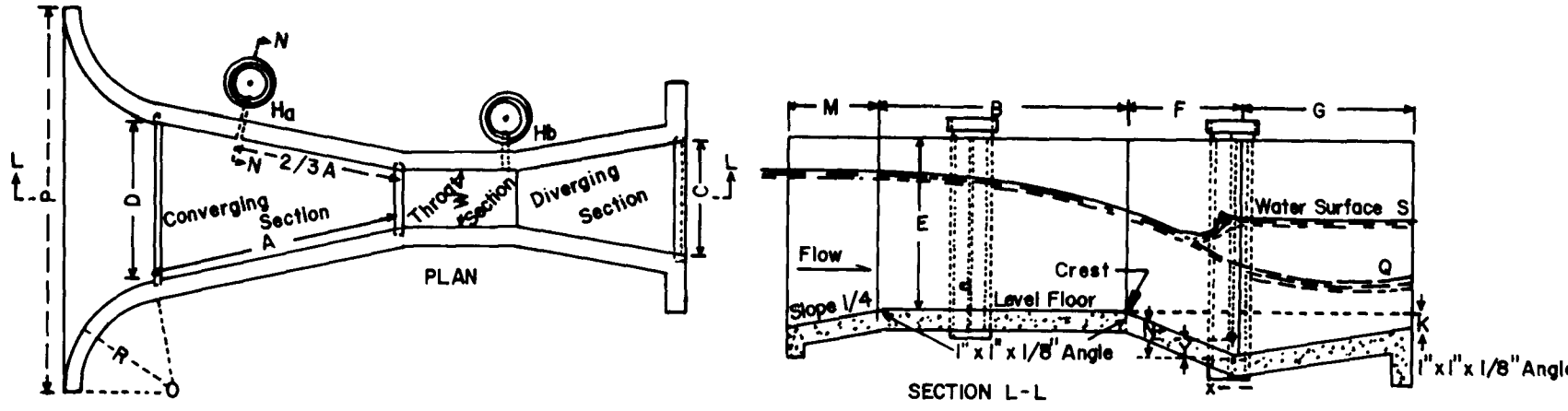

W		A		⅔ A		B		C		D		E		F		G		K	N	R		M		P		X	Y	Free-Flow Capacity (Second-Foot *)	
Ft	In.	Ft	In.	Ft	In.	Ft	In.	Ft	In.	Ft	In.	Ft	In.	Ft	In.	Ft	In.	In.	In.	Ft	In.	Ft	In.	Ft	In.	In.	In.	Minimum	Maximum
0	3	1	6⅜	1	¼	1	6	0	7	0	10⁹⁄₁₆	2	0	0	6	1	0	1	2¼	1	4	1	0	2	6¼	1	1½	0.03	1.9
0	6	2	7⁄₁₆	1	4⁹⁄₁₆	2	0	1	3½	1	3⅝	2	0	1	0	2	0	3	4½	1	4	1	0	2	11½	2	3	0.05	3.9
0	9	2	10⅝	1	11⅛	2	10	1	3	1	10⅝	2	6	1	0	1	6	3	4½	1	4	1	0	3	6½	2	3	0.09	8.9
1	0	4	6	3	0	4	4⅞	2	0	2	9¼	3	0	2	0	3	0	3	9	1	8	1	3	4	10¾	2	3	0.11	16.1
1	6	4	9	3	2	4	7⅞	2	6	3	4⅜	3	0	2	0	3	0	3	9	1	8	1	3	5	6	2	3	0.15	24.6
2	0	5	0	3	4	4	10⅞	3	0	3	11½	3	0	2	0	3	0	3	9	1	8	1	3	6	1	2	3	0.42	33.1
3	0	5	6	3	8	5	4¾	4	0	5	1⅞	3	0	2	0	3	0	3	9	1	8	1	3	7	3½	2	3	0.61	50.4
4	0	6	0	4	0	5	10⅝	5	0	6	4¼	3	0	2	0	3	0	3	9	2	0	1	6	8	10¾	2	3	1.3	67.9
5	0	6	6	4	4	6	4½	6	0	7	6⅝	3	0	2	0	3	0	3	9	2	0	1	6	10	1¼	2	3	1.6	85.6
6	0	7	0	4	8	6	10⅜	7	0	8	9	3	0	2	0	3	0	3	9	2	0	1	6	11	3½	2	3	2.6	103.5
7	0	7	6	5	0	7	4¼	8	0	9	11⅜	3	0	2	0	3	0	3	9	2	0	1	6	12	6	2	3	3.0	121.4
8	0	8	0	5	4	7	10⅛	9	0	11	1¾	3	0	2	0	3	0	3	9	2	0	1	6	13	8¼	2	3	3.5	139.5

* Equals 1 cu ft per sec.

LEGEND:

W	Size of flume, in inches or feet.
A	Length of side wall of converging section.
⅔ *A*	Distance back from end of crest to gage point.
B	Axial length of converging section.
C	Width of downstream end of flume.
D	Width of upstream end of flume.
E	Depth of flume.
F	Length of throat.
G	Length of diverging section.
K	Difference in elevation between lower end of flume and crest.
N	Depth of depression in throat below crest.
R	Radius of curved wing wall.
M	Length of approach floor.
P	Width between ends of curved wing walls.
X	Horizontal distance to H_a gage point from low point in throat.
Y	Vertical distance to H_a gage point from low point in throat.

Source: *ORSANCO* (1952).

Figure 7-18. DIMENSIONS AND CAPACITIES OF THE PARSHALL MEASURING FLUME, FOR VARIOUS THROAT WIDTHS, W(4)

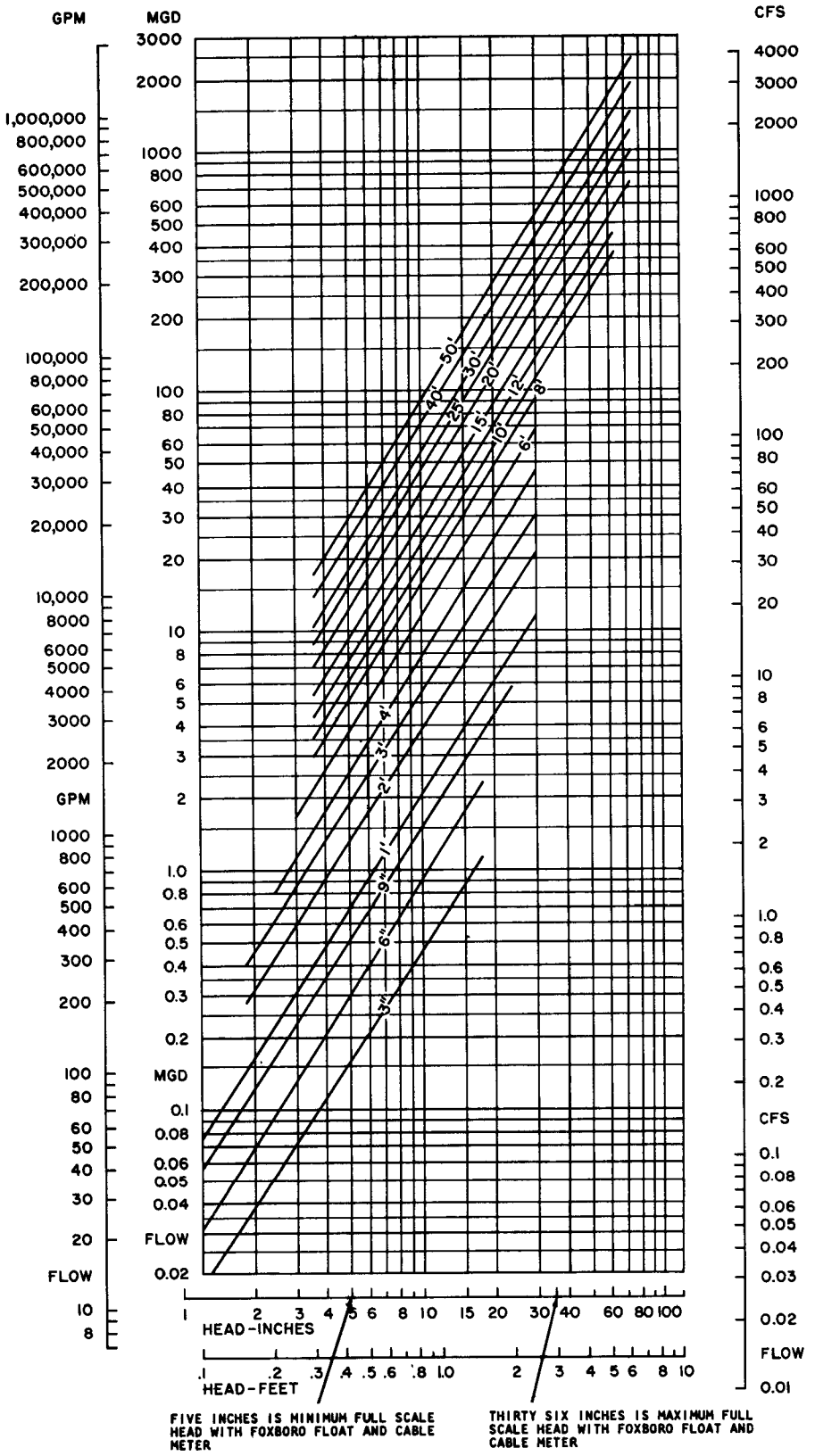

Figure 7-19. FLOW CURVES FOR PARSHALL FLUMES

determine the degree of submergence, a stilling well must be built in the throat section. The crest elevation in the throat section is H_b and the head in the converging section is H_a and the ratio H_a/H_b, is a measurement of the submergence. The stilling well used to measure H_b should be located near the downstream end of the throat section and the datum for H_a and H_b is the level floor of the converging section.

7.5.6.2 Palmer-Bowlus Flume

The Palmer-Bowlus flume may be nothing more than a level section of floor placed into a sewer, which is a major advantage over the Parshall flume. The length of the floor should be approximately the same as the diameter of the conduit. Figure 7-20 shows a few possible forms of the Palmer-Bowlus flume. The materials used to build the flume may be cast iron, stainless steel, fiberglass or concrete. This type of flume is easily installed in existing sewers as no drop in head is required. The critical depth will be at the top of the level floor. The flow through a Palmer-Bowlus flume may be represented by the following equation:

At critical flow:

$$\frac{Q^2}{g} = \frac{A_c^3}{b} \quad \text{and} \quad \frac{V_c^2}{2g} = \frac{A_c}{2b} = \frac{d_c}{2}$$

where:

A_c = area at the critical depth, ft^2

d_c = critical depth, ft

V_c = critical velocity

b = width of flume

No field calibration is necessary for this type of measuring device and its accuracy is comparable to that of a Parshall flume. A reasonably accurate measurement of flow can be obtained with upstream depths as great as 0.95 of the pipe diameter.

7.5.7 Summary of Specific Weirs and Flumes

Table 7-6 compares the head losses in weirs and flumes.

TABLE 7-6

HEAD LOSSES IN WEIRS AND FLUMES (In Feet)

Flow Q	Parshall Fl. 1 ft Throat	Palmer-Bowlus Flume	Rectangular Weir	Cipotelli	V-Notch
0.5	0.08	0.04	0.29	0.28	0.52
1.0	0.14	0.08	0.46	0.44	0.69
1.5	0.38	0.17	0.75	0.69	0.92

Figure 7-21 presents a rating schedule for certain flow-measuring devices for use under various situations.

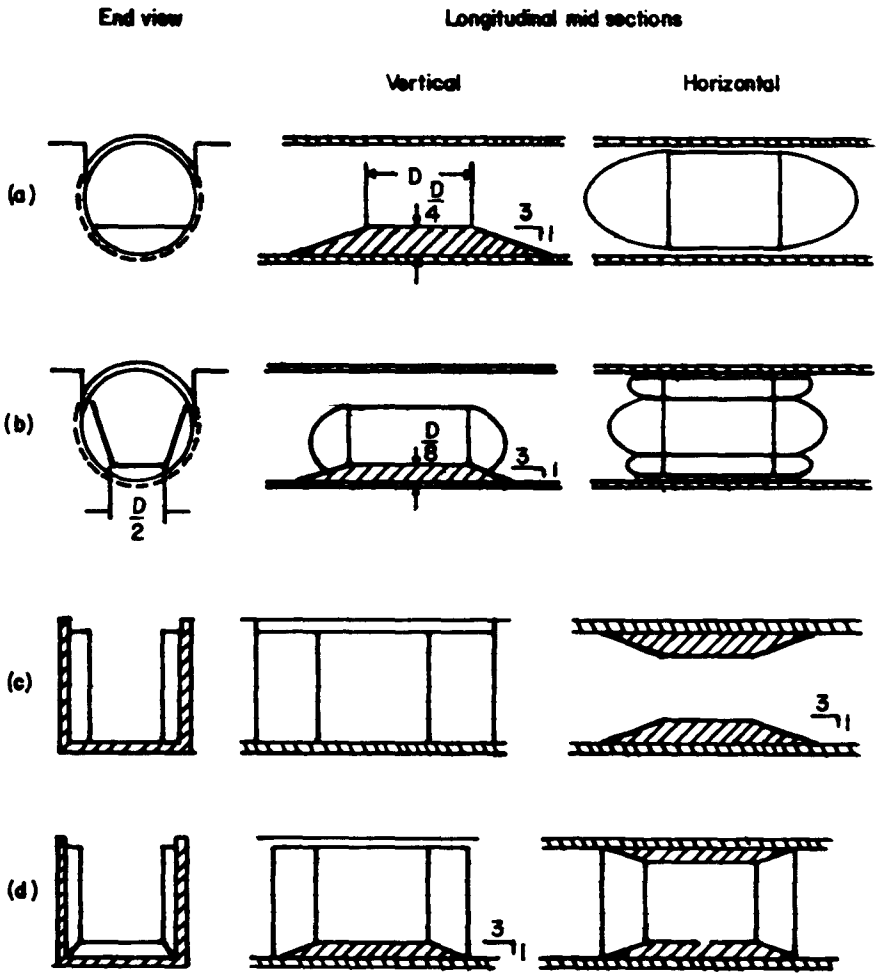

Figure 7-20. VARIOUS SHAPES OF PALMER-BOWLUS FLUMES (1)

	ORIFICE		VENTURI	NOZZLE	PITOT	ELBOW	LO-LOSS TUBE	MAGNETIC [1] FLOW METER
	Concentric	Segmental or Eccentric						
Accuracy, and amount of empirical data	E	F	G	G	*	P	G	E
Differential for given flow and size	E	E	G	G	F	P	E	None
Pressure Recovery	P	P	G	P	E	E	E	E
Use on dirty Service	P	F	E	G	VP	P	G	E
For liquids containing vapors	E[2]	E	E	G	F	F	G	E
For vapors containing condensate	E[3]	E	E	G	P	F	G	None
For viscous flows	F	U	G	G	**	U	F	E
First Cost small size	E	G	P	F	G	E	P	P
First Cost large size	E	G	P	F	G	E	P	P
Ease of changing capacity	E	G	P	F	VP	VP	P	E
Convenience of installation	G	G	F[4]	F	E	E	F[4]	F[5]

All ratings are relative: E excellent G good F fair P poor VP very poor U unknown

* For measuring velocity at one point in conduit, the well designed pitot tube is reliable. For measuring total flow accuracy depends on velocity traverse.

** Requires a velocity traverse.

1 Restricted to conducting liquids.

2 Excellent in vertical line if flow is upward.

3 Excellent in vertical line if flow is downward.

4 Both flange type and insert type available.

5 Requires pipe reducers if meter size is different from pipe size.

Figure 7-21. PRIMARY DEVICE FLOW SELECTION CHART

7.6 Miscellaneous Flow Measuring Methods

7.6.1 Measuring Level Change in Tank

For a batch operated system, it may be convenient to determine the amount of waste flow by measuring the change in level of the reservoir with time. For large volumes, the wastewater flows can be diverted into a holding tank.

7.6.2 Water Meters on Incoming Lines

A control on the amount of wastewater generated may be obtained if the water consumption of the plant under consideration is known. A material balance should therefore be made of the incoming and outgoing flow in order to obtain a check on the accuracy of the individual methods and to determine if an important discharge or incoming line has been omitted. A problem may exist in performing a water balance because of water losses from steam lines, evaporation, and other losses. The water content of the product is usually well known. The flow of the incoming water lines can be obtained with a typical household variety of positive displacement flow meters. On larger lines, it is convenient to measure the flow by using a verturi tube, an orifice plate, or a current meter. Current meters are easily installed in the lines to the different production processes.

7.6.3 Pumping Rates

When the water in a sewer must be pumped into another sewer, or if the wastewater is pumped out of a reservoir, as in a batch operation, an estimate of the flow may be obtained by recording the time of pumping and the capacity of the pump at the discharge pressure, using head versus capacity curves supplied by the manufacturer.

7.7 Secondary Flow Measurement Devices

7.7.1 Pressure Difference Meters

Pressure difference meters measure the difference in pressure head along the flow meter. The principle is the same as for other meters that measure pressure. The only problem to be expected when using these meters with wastewaters is possible clogging of the openings which connect the pipe to the manometer. Manufacturers have designed systems which separate the water in the pipe from the differential pressure measuring device, thus eliminating the clogging problem.

7.7.2 Measurement of Surface Elevation

The cheapest but perhaps the least desirable method to measure water elevation is the use of a hook gauge as shown in Figure 7-22. The gauge is manually brought to the water surface and the water level elevation read. It is preferred to use gauges in a stilling well. The main disadvantage of this method is that the flow cannot be read on a continuous basis inasmuch as the system cannot be connected to a control system or other sampling device.

Another method for measuring water elevation is a bubbler tube constructed in a side wall cavity of a flume as shown in Figure 7-23. As the height of the water surface changes, the resistance to escaping air through the immersed bubbler tube changes. The pressure differential is sensed by a translator which activates an air motor, which in turn, pushes a microswitch over a cam wheel. This action operates the recording chart and pen. The bubbler tube can be installed at any depth and it is possible to make the apparatus portable using an air cylinder for the air supply.

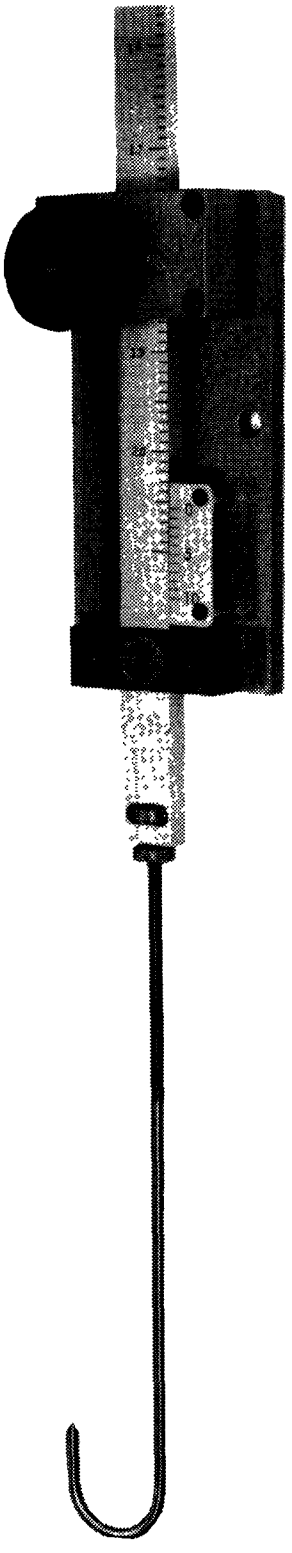

Figure 7-22. HOOK GAUGE (11)

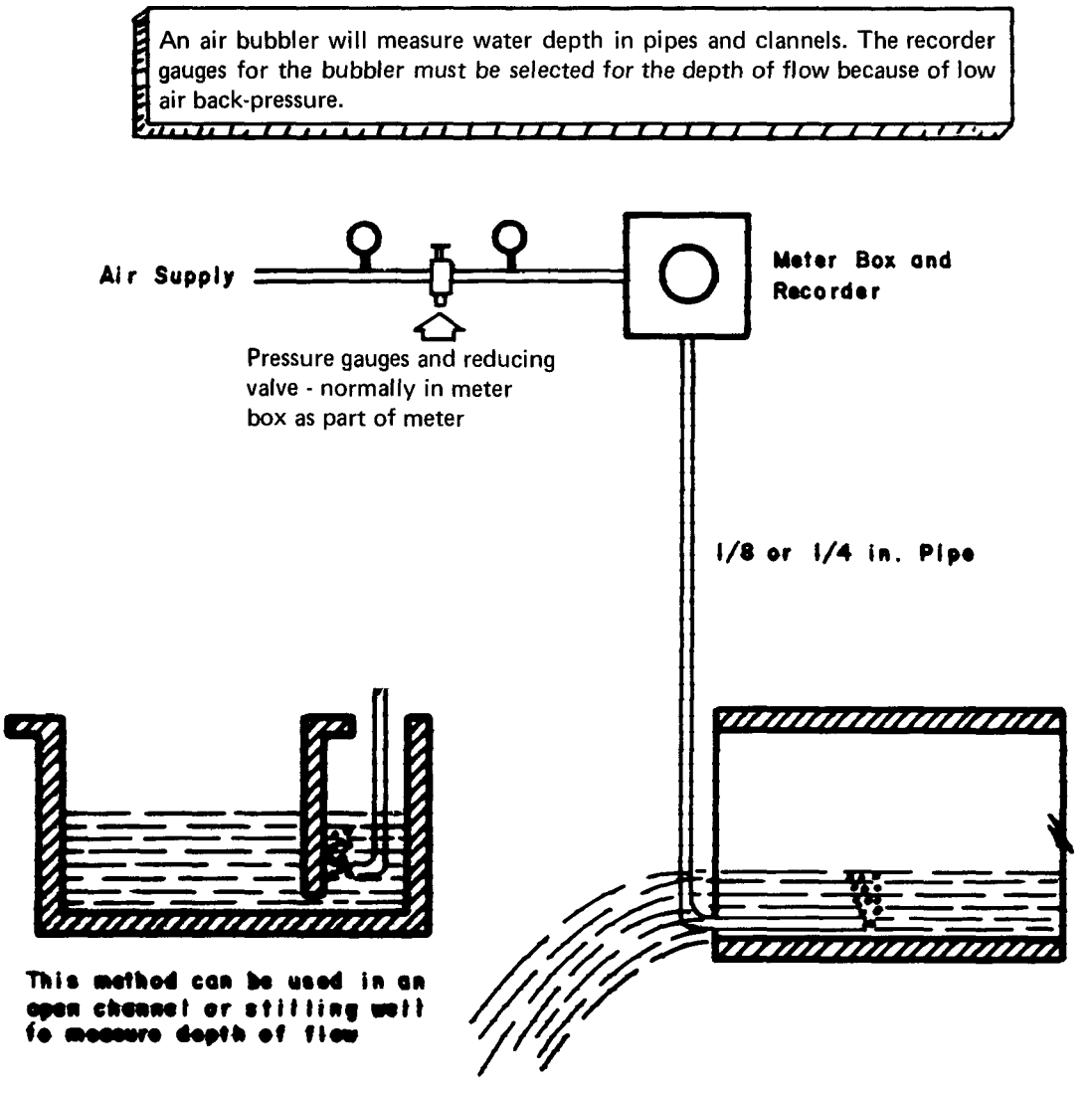

Figure 7-23. AIR BUBBLER FOR MEASURING WATER DEPTH (4)

Floats may be used to measure elevation as shown in Figure 7-24. Figure 7-25 shows the installation of a float in a manhole.

The use of a pressure sensing chamber at the water surface in order to measure flow is shown in Figure 7-26. The wastewater should be relatively free from suspended material.

7.8 Friction Formulas

Instead of using a flow measurement device such as a weir or flume, it is possible to calculate the flow in a sewer by measuring the water depth and using a flow equation such as the Manning formula to determine the mean velocity. The flow may be obtained by the continuity equation. The disadvantage in using this method is that it is necessary to estimate the coefficient of roughness and the slope of the sewer. The Manning formula can be used for open channel flow such as partly filled sewers as well as for closed-conduits under pressure flow. The Manning formula is written as follows:

$$V = \frac{1.486}{n} \cdot (R^{2/3}S^{1/2}) \quad \text{(English units)}$$

where:

V = average velocity, fps

n = coefficient of roughness

R = hydraulic radius, ft

$$= \frac{\text{cross-sectional area}}{\text{wetted perimeter}}$$

S = slope of energy grade line

Figure 7-27 is an alignment chart for the solution of the Manning formula for circular pipes flowing full. This chart can be used for other shapes of closed conduits and open channels if the discharge scale is ignored and the diameter scale is taken to represent values equal to four times the hydraulic radius of the actual cross section. When the pipe is not flowing full, the ratios shown in Table 7-1 should be used.

The depth of the water in the sewer is measured by any convenient manner. Then the ratio d/D is calculated where D is the diameter of the sewer and d is the depth of water in the sewer. With this ratio, Table 7-7 can be used to find the corresponding ratios of the volume and velocity for the partially filled sewer for use with Figure 7-27. Table 7-8 can be used to obtain an estimation of the coefficient of roughness to be used in the Manning formula noting that the coefficient of roughness can increase with time due to erosion, settled solids and corrosion. Obviously, the choice of a reasonable value for n is important. Even though the use of this formula for flow measurements may not be very accurate, it is useful for estimating ranges of flow.

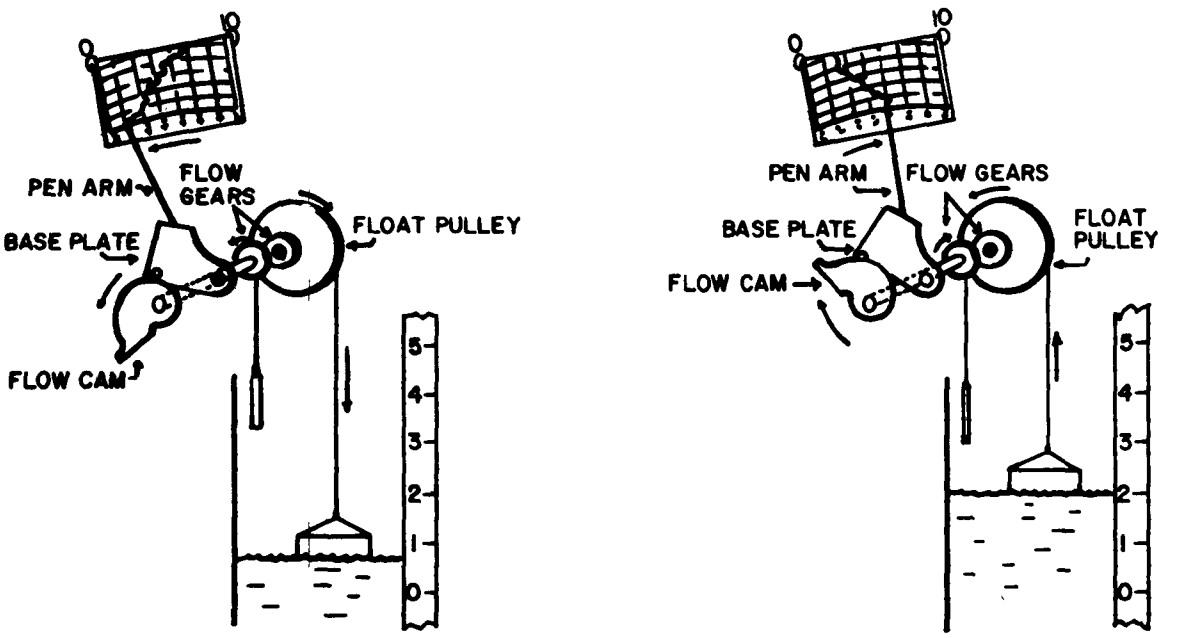

Figure 7-24. FLOATING WATER ELEVATION MEASURING DEVICE (11)

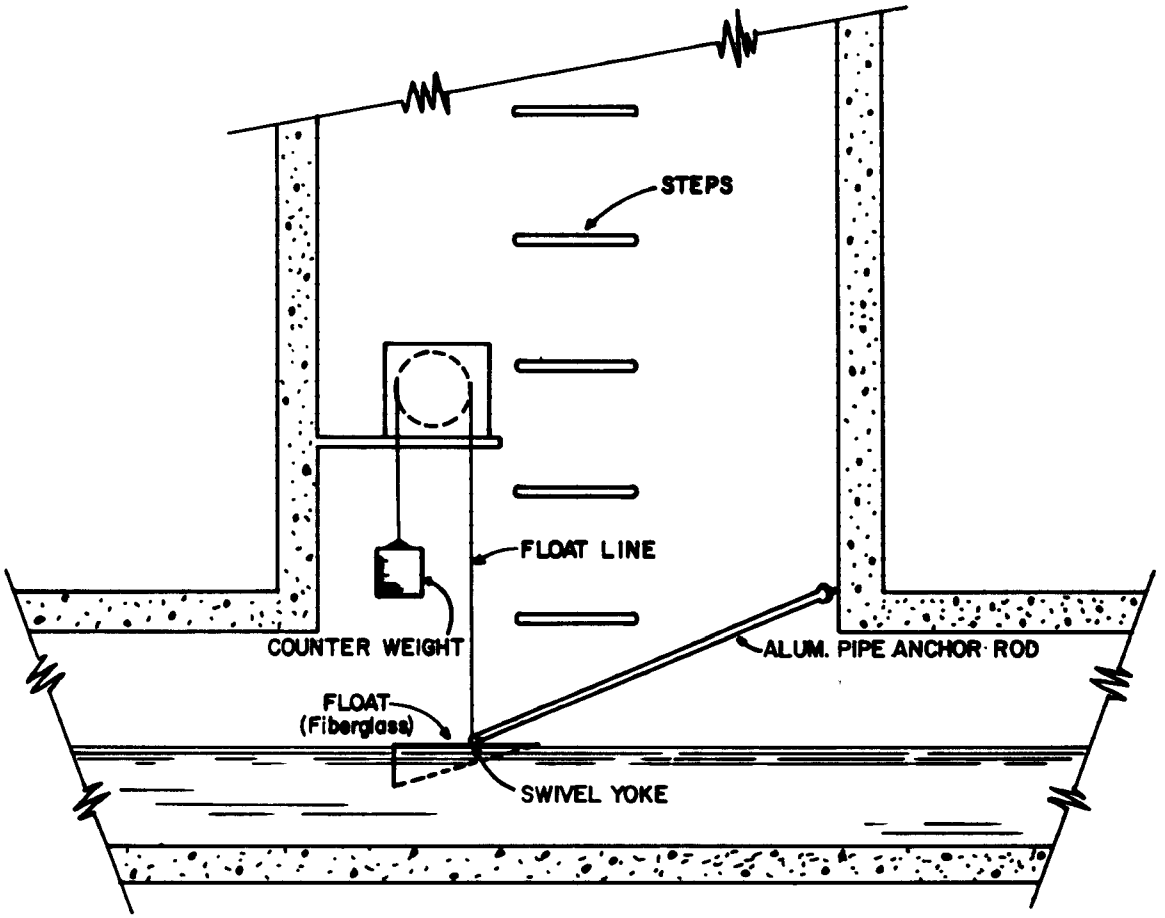

Figure 7-25. RECORDER AND SCOW FLOAT USED IN SEWER MANHOLE (2)

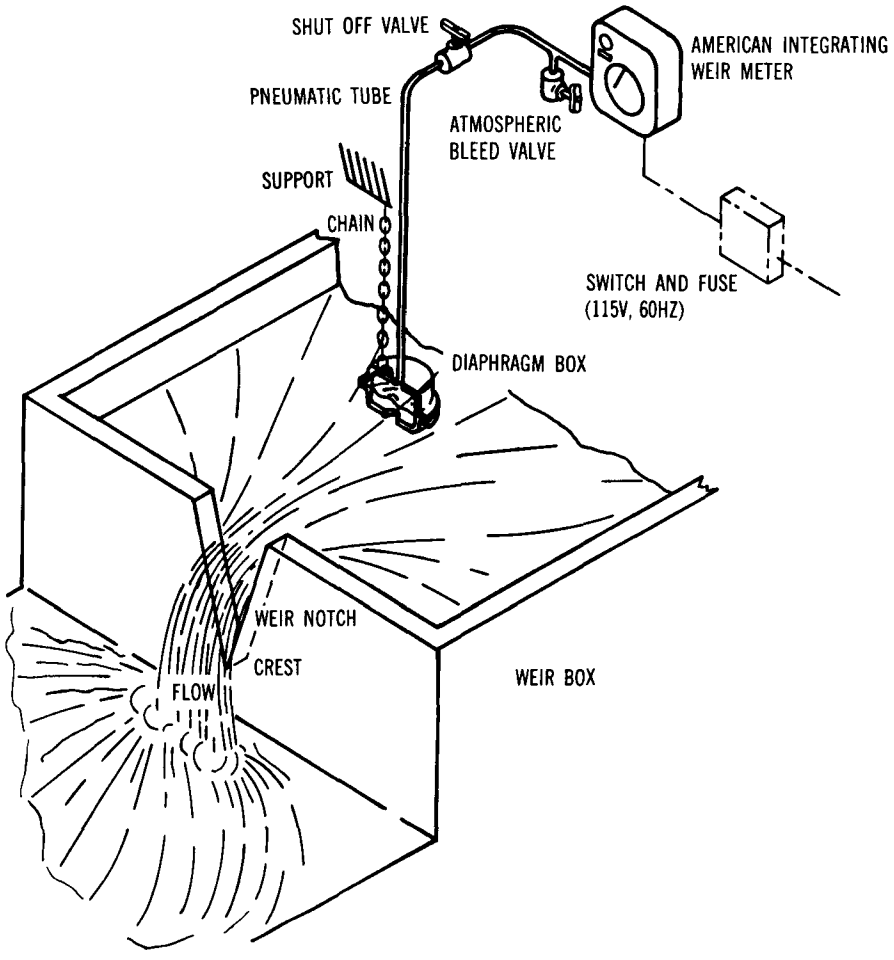

Figure 7-26. PRESSURE SENSOR (17)

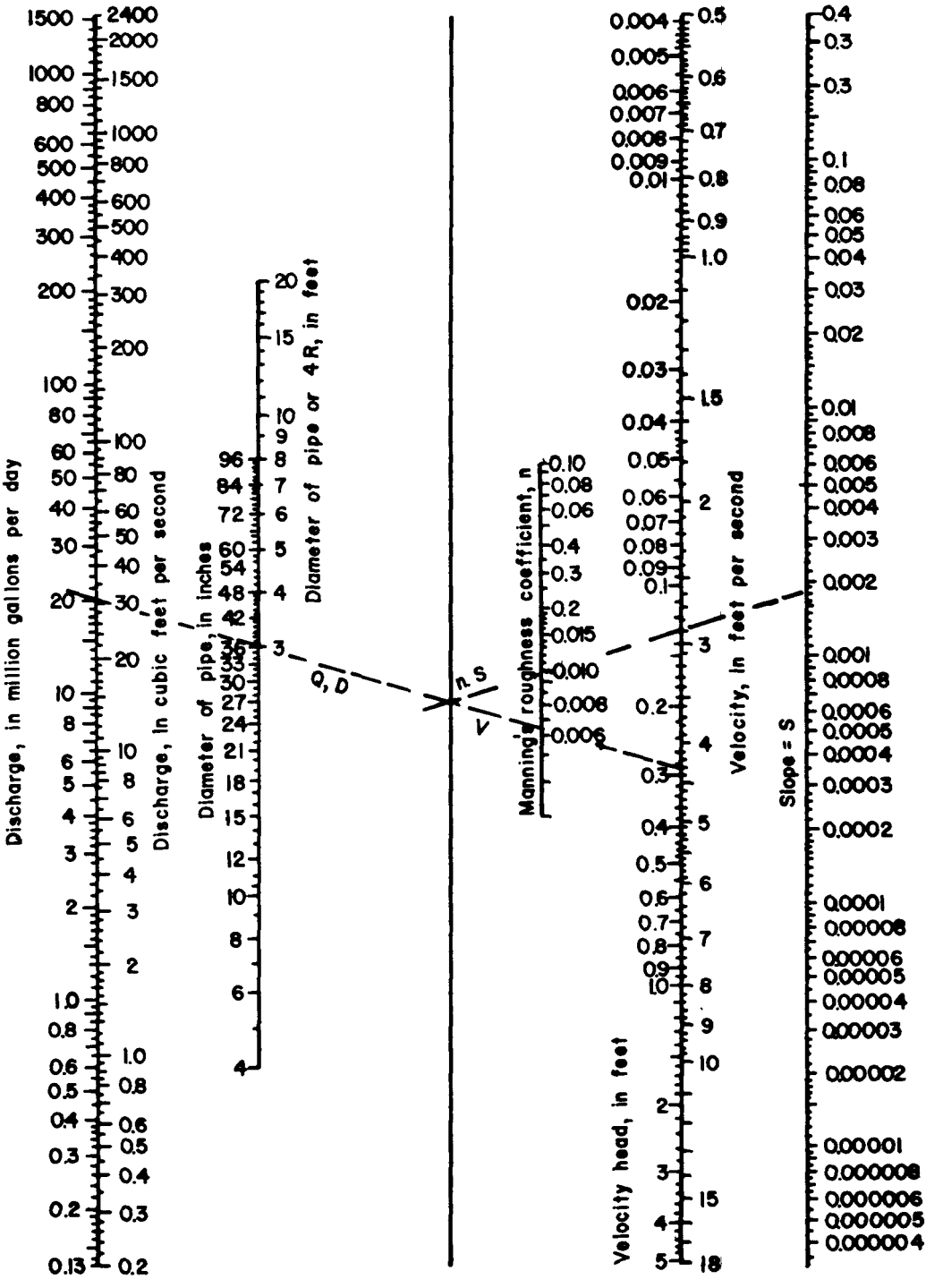

Figure 7-27. ALIGNMENT CHART FOR MANNING FORMULA FOR PIPE FLOW (1)

TABLE 7-7

RATIOS TO RELATE FLOW IN SEWERS FLOWING FULL TO FLOW IN SEWERS PARTLY FULL (3)

Ratio of	$\frac{\text{depth of flow}}{\text{sewer diameter}}$	0.1	0.2	0.3	0.4	0.5	0.6	0.7	0.8	0.9	1.0
Ratio of	$\frac{\text{cross-section of flow}}{\text{cross-section of sewer}}$	0.05	0.14	0.25	0.37	0.50	0.63	0.75	0.86	0.95	1.00
Ratio of	$\frac{\text{volume flowing partly full}}{\text{volume flowing full}}$	0.02	0.08	0.18	0.33	0.49	0.67	0.84	0.98	1.07	1.00
Ratio of	$\frac{\text{velocity flowing partly full}}{\text{velocity flowing full}}$	0.33	0.56	0.74	0.87	0.98	1.07	1.13	1.16	1.13	1.00

TABLE 7-8

VALUES OF EFFECTIVE ABSOLUTE ROUGHNESS AND FRICTION FORMULA COEFFICIENTS(1)

Conduit Material	Manning n
Closed conduits	
Asbestos-cement pipe	0.011-0.015
Brick	0.013-0.017
Cast iron pipe	
Uncoated (new)	–
Asphalt dipped (new)	–
Cement-lined & seal coated	0.011-0.015
Concrete (monolithic)	
Smooth forms	0.012-0.014
Rough forms	0.015-0.017
Concrete pipe	0.011-0.015
Corrugated-metal pipe	
(1/2-in. x 2 2/3 in. corrugations)	
Plain	0.022-0.026
Paved invert	0.018-0.022
Spun asphalt lined	0.011-0.015
Plastic pipe (smooth)	0.011-0.015
Vitrified clay	
Pipes	0.011-0.015
Liner plates	0.013-0.017
Open channels	
Lined channels	
a. Asphalt	0.013-0.017
b. Brick	0.012-0.018
c. Concrete	0.011-0.020
d. Rubble or riprap	0.020-0.035
e. Vegetal	0.030-0.40
Excavated or dredged	
Earth, straight and uniform	0.020-0.030
Earth, winding, fairly uniform	0.025-0.040
Rock	0.030-0.045
Unmaintained	0.050-0.14
Natural channels (minor streams, top width at flood stage<100 ft)	
Fairly regular section	0.03 -0.07
Irregular section with pools	0.04 -0.10

7.9 References

1. "Design and Construction of Sanitary and Storm Sewers," *ASCE Manuals and Reports on Engineering Practice No. 37,* New York, WPCF Manual of Practice No. 9, 1969.

2. Kennard, J. K. *Elementary Fluid Mechanics,* 4th Edition, John Wiley & Sons, Inc., New York.

3. "Manual of Disposal of Refinery Wastes," *Volume of Liquid Wastes,* American Petroleum Institute, 1969.

4. *Planning and Making Industrial Waste Surveys,* Ohio River Valley Water Sanitation Commission, April, 1952.

5. Eckenfelder, W. W., Industrial Pollution Control, *McGraw-Hill, 1966.*

7.10 Additional Reading

1. Black, H. H., "Procedures for Sampling and Measuring Industrial Wastes," *Sewage and Industrial Wastes,* 24, 45, 1952.

2. Hill, H. O., "Primary Devices and Meters for Wasteflow Measurements," *Sewage and Industrial Wastes,* 22:1357, 1950.

3. Spink, L. K., *Principles and Practice of Flow Meter Engineering,* Ninth Edition, The Foxboro Company.

4. Blaisdell, F. W., "Discharge of the V-Notch Weirs at Low Heads," *Civil Eng.* g, 485-6, 1939.

5. Brown, W. H. and G. E. Symons, "Flow Measurement in Sewage Works," *Sewage and Industrial Wastes,* 27:149 and 283, 1955.

6. Davis, C. V. and V. E. Sorensen, *Handbook of Applied Hydraulics,* Third Edition, McGraw-Hill, 1969.

7. Driskell, L. A., "How to Select the Best Flowmeter," *Chemical Engineering,* March 4, 1963.

8. *Fluid Meters, Their Theory and Application,* 5th Edition, American Soc. Tech. Engrs., New York, 1958.

9. Hull, D. M. Macomber and J. H. Easthager, "Flow Measurement by Radiotracer," *Sewage and Industrial Wastes,* 31:45-52, 1959.

10. King, H. W., *Handbook of Hydraulics,* 4th Edition, McGraw-Hill, 1954.

11. Russell, G. E., *Textbook of Hydraulics,* Harry Holt and Co., New York, N. Y.

12. U. S. Dept. of the Interior, Bureau of Reclamation, *Water Measurement Manual,* First Edition, Denver, 1959.

13. Besselievre, E. G., *Industrial Waste Treatment,* McGraw-Hill, 1952.

7.11 List of Some Manufacturers of Flow Measuring Devices

1. Acco, Bristol Industrial Instruments, Waterburg, Connecticut 06720
2. Badger Meter, Inc., Instrument Division, 4545 West Brown Deer Road, Milwaukee, Wisconsin 53223
3. BIF Industries, Providence, Rhode Island
4. BIF Sanitrol, P. O. Box 41, Largo, Florida 33540
5. Drexelbrook Engineering Co., 205 Keith Valley Road, Harsham, Pa. 19044
6. Fischer & Porter Co., Wariminister, Pa. 10974
7. Flow Technology, Inc., 401 S. Hayden Road, Tempe, Arizona 05201
8. Foxboro Company, Neponset Avenue, Foxboro, Massachusetts 02035
9. Hinde Engineering Co., P. O. Box 56, Saratoga, Calif. 95070
10. Leeds & Northrup Co., Summerytown Pike, North Wales, Pa. 19454
11. Leopold & Stevens, Inc., P. O. Box 600, Beaverton, Oregon 97005
12. Meriam Instrument Co., 10920 Madison Avenue, Cleveland, Ohio 44102
13. N. B. Products, Inc., 35 Beulah Road, New Britain, Pa. 10901
14. Pamapo Instrument Co., Bloomingdale, N. Y. 07403
15. Robertshaw Controls Co., 1013 N. Broadway, Knoxville, Tenn. 37917
16. Simplex Valve & Meter Co., Lancaster, Pa.
17. Singer, American Meter Division, P. O. Box 13693, Atlanta, Ga. 30324
18. Tri-Aid Sciences, Inc., 161 Norris Drive, Rochester, N. Y. 14610

Chapter 8
DATA ANALYSIS

8.1 General

Data obtained through a well planned and executed monitoring program will provide valuable information to those individuals responsible for the proper operation of plant processes and environmental control. The data obtained from a monitoring system can be employed in the evaluation and possible alteration of in-plant and wastewater treatment processes and may influence the commitment of large capital expenditures. Thus, the parameters monitored and the significant results obtained from the monitoring program must be critically evaluated prior to alterations of the processes involved. Because of the significance which may be placed on the results of the monitoring program, it should be the desire of plant management to distinguish between the data results which are influenced by fluctuations which are not representative of the discharges from the processes involved. Placing significance on monitoring results which are not representative may result in unnecessary expenditures or in a false sense of security.

The variability of the parameters measured in the monitoring system may result from various phenomena, some of which are listed below.

1. In-plant spills or poor housekeeping
2. Temporary modification of in-plant processes
3. Chemical reactions resulting from various combinations of waste discharges
4. Improper maintenance and/or operation of monitoring equipment
5. Errors in calculations or analysis of measured parameters

Those deviations which are not representative of the industrial waste treatment processes employed must be identified prior to the evaluation of the monitoring results. They may indicate the need for improvement in the maintenance and operation of the industrial processes, waste treatment processes, or the monitoring system itself.

The variability of the parameters may be random, resulting from the random effects on the process and its measurement, or cyclic, resulting from periodic phenomena affecting the process (daily records, weekly periods, etc.).

The purpose of a wastewater survey is to obtain sufficient data about the wastewater characteristics of a plant so that a monitoring program can be established. In obtaining data, the values for various wastewaters will be observed to vary or fluctuate with time, location, sample, analysis, personnel, type of preservation and perhaps a few more less evident factors. Time is usually considered the most significant factor causing fluctuation in data. Another important factor is location. Samples taken at the same time but at different locations, even in the same sewer, often present different results. The preliminary investigation should minimize these sources of errors. The results of the analysis of a sample, by the same or different technicians and using the same laboratory techniques, often fluctuate widely. Even very accurate laboratory analysis cannot prevent a relatively wide range in determined values of parameters, such as BOD.

Statistics aid in the development of general laws resulting from numerous individual determinations which, by themselves, may be meaningless. The resulting relationships are part of the fundamental function of statistics which expresses the data obtained from an investigative process in a condensed and meaningful

form. Thus, the average or mean is often used as a single value to represent a group of data. The variability of the group of observations is expressed by the value of the standard deviation and trends in concentrations measured during the monitoring process are expressed in the form of regression coefficients.

In general, the concern is with the treatment of the collected data. The accuracy or usefulness of these data is greatly enhanced if a full understanding was involved in generating the facts. *The balance between use of statistical methods and evaluation based upon physical understanding is extremely important.* The use and value of statistics decreases as physical understanding increases. Specifically, the difficulty lies in separating chance effects from valid occurrences. With the knowledge of basic probability theory and the use of statistical techniques, such as Least Squares Curve Fitting, Analysis of Variance, Regressive and Correlation Analysis, Chi-Squared Goodness of Fit, and others, it is possible to construct mathematical models and curves of almost any level of precision desired. Such techniques help to evaluate information having wide variations, so that an estimate of the best value of the parameter being measured can be assigned; and also to assess the precision of that estimate. Statistical procedures may also help in identifying errors and mistakes and are helpful in comparing sampling methods and procedures and in evaluating waste loadings from different process schemes.

Statistics and data analysis are very broad topics and the scope of this handbook does not permit thorough discussion of any of the techniques available. Several good references can be cited for use in which a statistical approach is desired. References 1 and 5 provide basic definitions of statistical terms and offer methods for determining accuracy and precision. References 2 and 3 are useful in suggesting ways in which data obtained with a wastewater survey may be presented. The use of probability paper and flow diagrams is discussed. Detailed information about statistics, including several tests for significance, can be found in references 4 and 6. It should be emphasized that rules and formulas for data analyses are many and they must be chosen wisely and applied correctly to be of value.

8.2 Specific Application of Statistics to Waste Monitoring Programs

Probably the major use of statistics in a waste monitoring program is to develop the data needed for constructing a reliable flow and materials balance diagram. Statistical correlation of the data will allow a proper choice of average values and will provide a correct method for determining the range of values for a specific parameter.

Probability plots can be developed which will define the 50 percent and 90 percent values to use for design purposes. Also, the standard deviation and variances can be calculated to define the range and variability of the data. This information is valuable, for example, in determining equalization requirements prior to specific treatment processes or to evaluate the operational effectiveness between different shifts of production. A wide difference in standard deviation or variance between shifts with the same production schedule would infer a different degree of operational care with regard to discharge requirements. Inefficient operation and frequent spillages can often be determined by comparing the appropriate statistical parameters for various operating periods or shifts.

8.3 Developing the Mean, Standard Deviation and Variance for Random Data

As a means of illustrating the application of statistical evaluations to collected data, a theoretical case will be developed as follows:

A sampling program in which BOD values were determined every four hours for seventeen days generated information as shown in Table 8-1. A chronological plot, Figure 8-1 indicates that the BOD values are random with no distinct pattern. It also shows a wide variation in results, from a low of 207 mg/1 to a high of 1185 mg/1 with a middle range of approximately 650-750 mg/1.

TABLE 8-1

SUMMARY OF BOD CHARACTERIZATION DATA
(4-hour composites)

Date		BOD(mg/1)	Date	BOD(mg/1)	Date	BOD(mg/1)	Date	BOD(mg/1)
2/10	4 am	717		758		940		1054
	8 am	946		769		233		888
	12 noon	623		574		1158		266
	4 pm	490		1135		407	2/23	619
	8 pm	666		1142	2/19	853		691
	12 pm	828	2/15	505		751		416
2/11		1135		221		207		1111
		241		957		852		973
		396		654		318		807
		1070		510		358	2/24	722
		440		1067	2/20	356		368
2/12		534	2/16	329		847		686
		1035		371		711		915
		265		1081		1185		361
		419		621		825		346
		413		235		618	2/25	1110
		961		993	2/21	454		374
		308	2/17	1019		1080		494
2/13		1174		1023		440		268
		1105		1167		872		1078
		659		1056		294		481
		801		560		763	2/26	472
		720		708	2/22	776		671
		454	2/18	340		502		556
2/14		316		949		1146		672

Sum of all values = 68,700 mg/1

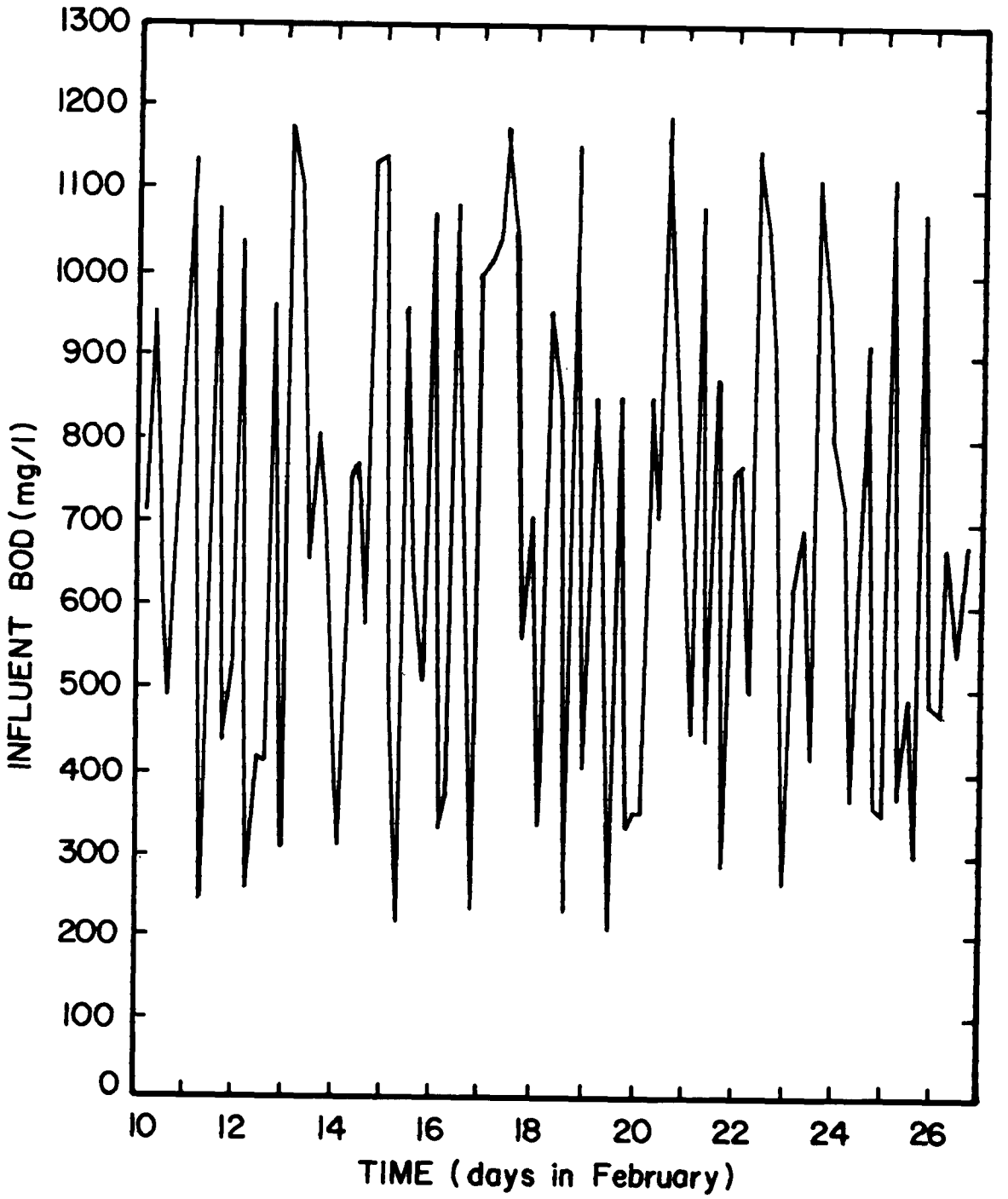

Figure 8-1. CHRONOLOGICAL VARIATION IN INFLUENT BOD CONCENTRATION

Had the plot appeared as shown in Figure 8-2, it would have indicated several events, such as in-plant spills, changes in normal plant processes, differences in handling of samples, and others. In this case, physical understanding of the methods of data generation is obviously more important than statistical treatment of the data.

Because the data in the hypothetical problem are random, a typical or normal probability curve would have resulted if these data had been plotted on arithmetical paper as shown in Figure 8-3. In a normal or "gaussian" curve, the standard deviation, σ, is equal to a value of plus or minus 34.13 percent from the mean or average value. In other words, 68.26 percent of all values fall within plus or minus one standard deviation from the mean. In practical terms this means that "normally" the value of any monitored parameter, such as flow, pH, solids, BOD, etc., would fall within set limits 68.26 percent of the time.

The mean, standard deviation, and variance are used to define the degree of scatter in data. These parameters can be determined either numerically or graphically.

8.3.1 Numerical Solution

1. The mean, $\bar{X}$, is the average of all sample values

$$\text{mean} = \bar{X} = \frac{\Sigma X_i}{n}$$

where:

X_i = individual sample values

n = total number of samples

therefore:

$$\bar{X} = \frac{68{,}700 \text{ mg/l}}{100}$$

$$= 687 \text{ mg/l}$$

2. The *variance*, S^1, is defined as:

$$S^1 = \frac{\Sigma(X_i - \bar{X})^2}{n - 1}$$

Thus:

$$S^1 = \frac{8{,}635{,}000}{99}$$

$$= 87{,}220 \text{ mg}^2/\text{l}^2$$

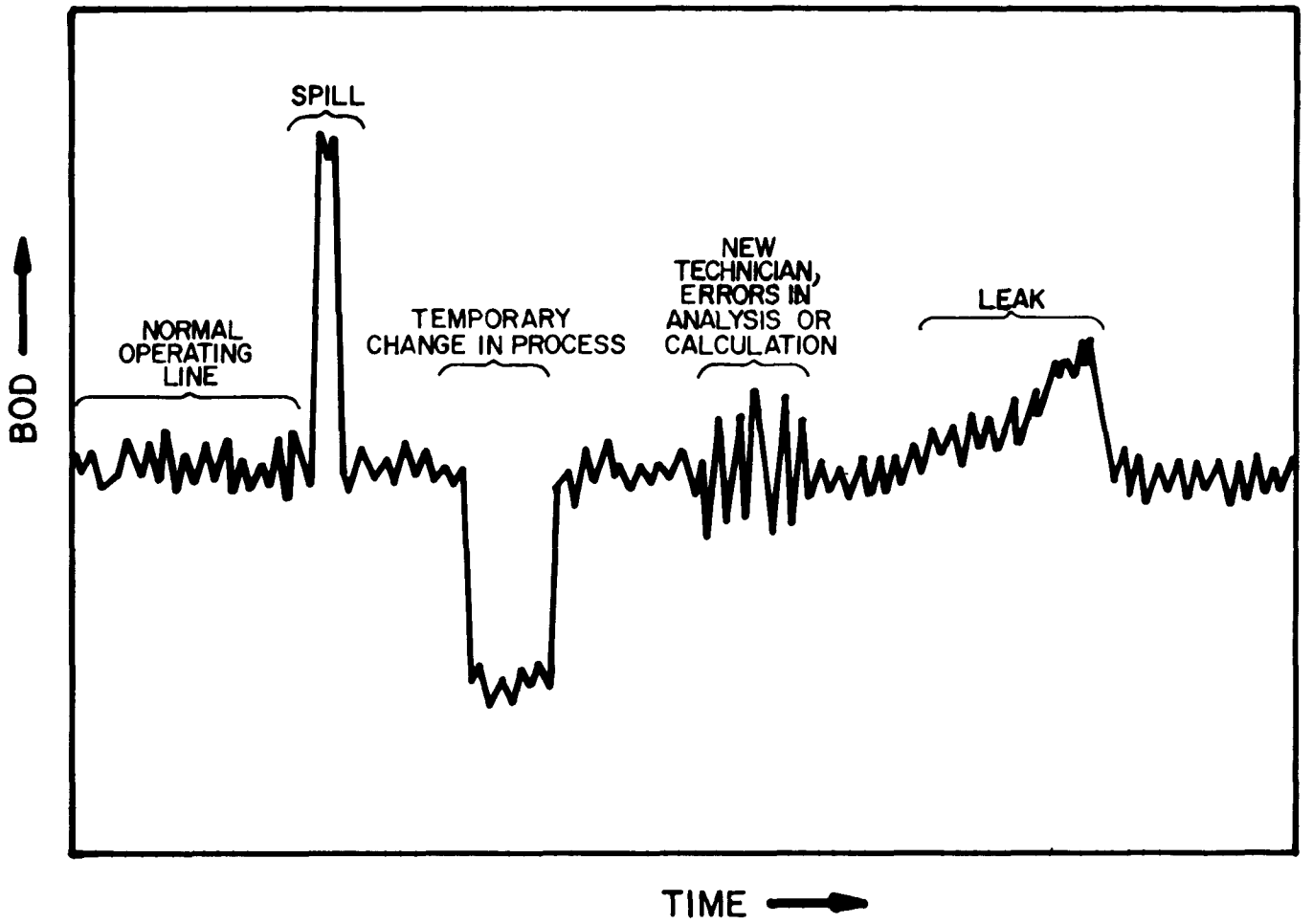

Figure 8-2. CHRONOLOGICAL VARIATION IN BOD

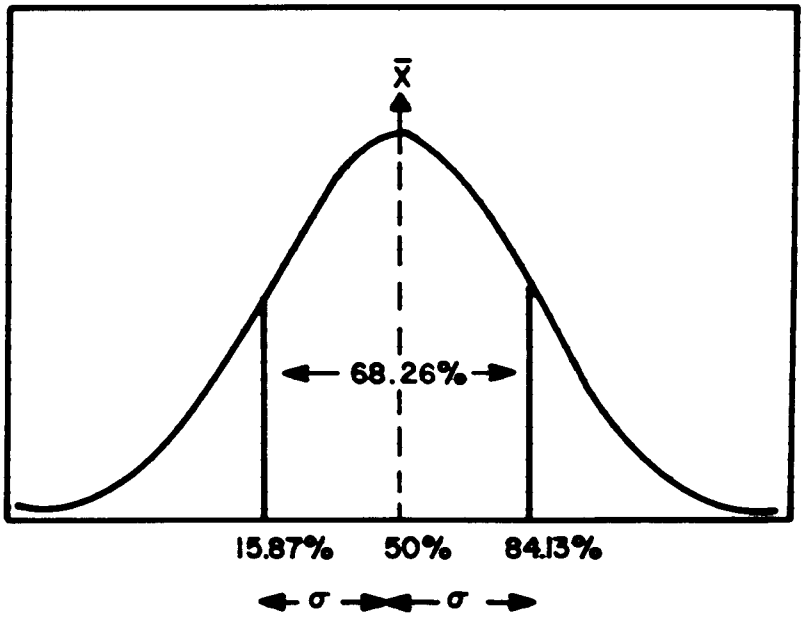

Figure 8-3. NORMAL PROBABILITY CURVE

3. The *standard deviation,* σ , is the square root of the variance:

$$\sigma = \sqrt{S^2}$$

$$= \sqrt{87{,}220}$$

$$= 295 \text{ mg/l}$$

8.3.2 Graphical Solution

The graphical solution is developed using probability paper and yields a plot of the measured parameter, BOD, on the Y axis versus percent probability on the X axis. The probability plot is a variation of the "gaussian" or normal curve. Instead of obtaining a bell shaped curve, the probability plot yields the relationship shown in Figure 8-4.

There are two acceptable methods for obtaining the graphical solution. If the total number of samples is less than 30, each sample is treated individually. If more than 30 samples must be analyzed, the samples may be grouped into intervals for ease of manipulation:

Method 1: For less than 30 samples

Even though there are more than 30 samples in this example problem, this method can still be used, it is merely more tedious.

1. Arrange the data in increasing order as shown in Table 8-2

2. Assign each value a number, m (m = 1, 2, 3, 4, 5, etc.)

3. Calculate the percent probability for each value:
   % Probability = I/2 + previous probability

where:

n = total number of samples

m = cummulative total of assigned numbers

I = increment = $\frac{100 \text{ Percent}}{n}$

The first plot position is calculated as I/2 and subsequent positions are equal to I + previous probability.

Therefore, for this example:

n = 100

m = 1 to 100

I = 100/100 = 1

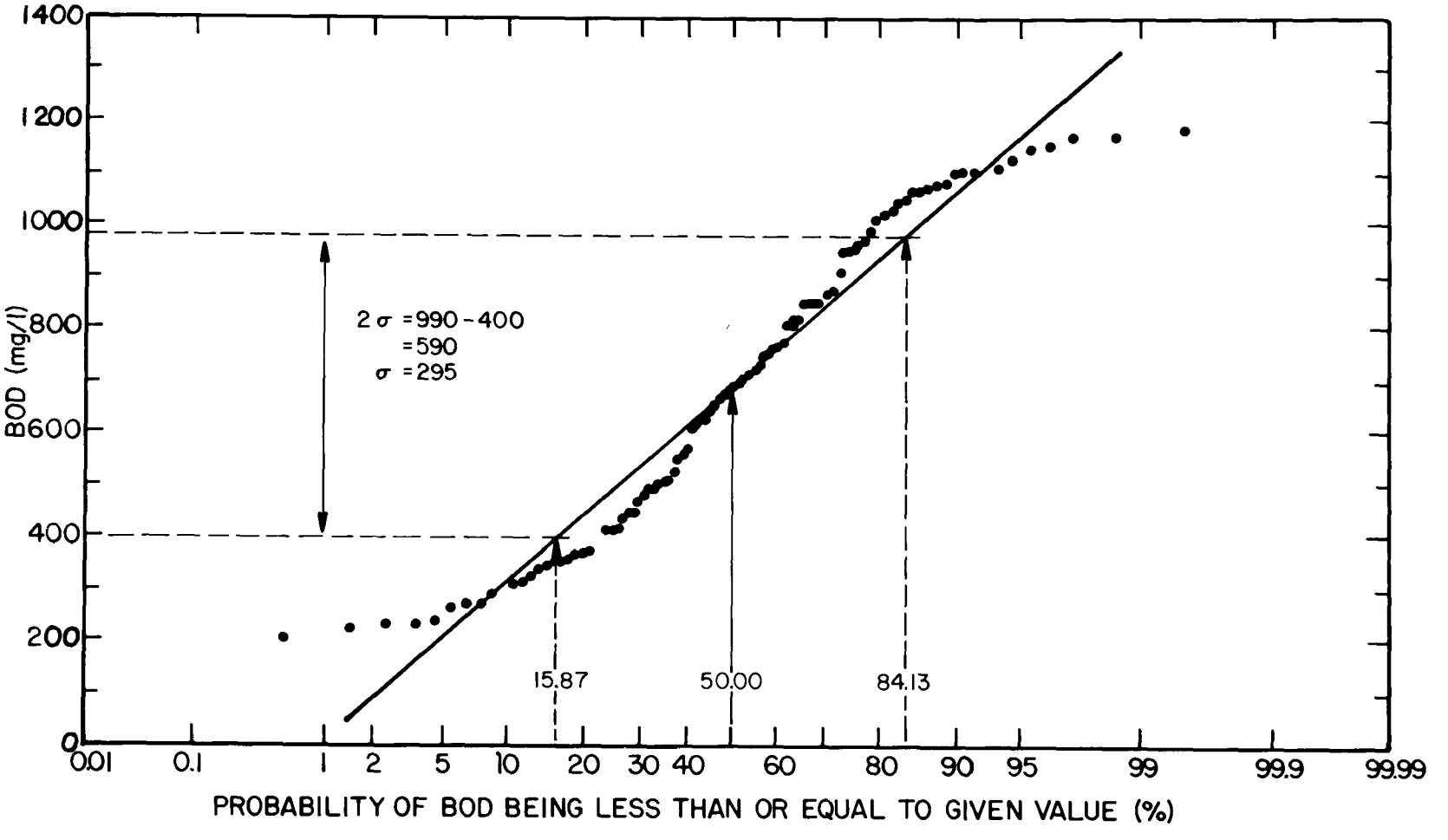

Figure 8-4. PROBABILITY PLOT OF GRAPHICAL METHOD I

TABLE 8-2

SOLUTION OF GRAPHICAL METHOD 1

BOD (mg/1)	m	Calculation of Plot Position	Percent Probability Plot Position (I + Previous Probability)
207	1	I/2	0.5%
221	2	I + .5%	1.5%
233	3	I + 1.5%	2.5%
235	4	I + 2.5%	3.5%
241	5	I + 3.5%	4.5%
265	6	I + 4.5%	5.5%
266	7	I + 5.5%	6.5%
↕	↕	↕	↕
1185	100	I + 99.5%	9 9.5%
	n = 100		

TABLE 8-3

SOLUTION OF GRAPHICAL METHOD 2

Interval BOD (mg/1)	No. of BOD Samples in Interval	m	Percent Probability Plot Position $(\frac{m}{n+1})$
200-249	5	5	4.95%
250-299	4	9	8.91%
300-349	6	15	14.85%
350-399	7	22	21.78%
400-449	6	28	27.72%
↕	↕	↕	↕
1150-1199	4	100	99.01%
	n = 100		

4. On probability paper plot each value as its percent probability, shown in Figure 8-4. Draw a straight line through the data.

5. From this plot obtain the 50 percent value

   50 percent value $\simeq \bar{X} \simeq 690$ mg/l

6. Calculate the standard deviation, σ, as 1/2 of the difference in the values which occur at the 15.87 (50.00 minus 34.13) and 84.13 (50.00 plus 34.13) percentile levels from Figure 8-4.

   $$\sigma = \frac{\text{value at 84.13 percent - value at 15.87 percent}}{2}$$

   $$= \frac{900 - 400}{2}$$

   $$\sigma = 295 \text{ mg/l}$$

7. Calculate the variance as the square of the standard deviation

   $$S' = \sigma^2$$

   $$= (295)^2$$

   $$= 87{,}025 \text{ mg}^2/\text{l}^2$$

Method 2: For Greater than 30 Samples

1. Divide the data into groups of intervals such as in Table 8-3.

2. Calculate the percent probability of each interval as in the abbreviated Table 8-3.

   m = cumulative number of samples

   $$\text{Percent probability} = \frac{m}{n+1}$$

where:

   n = total number of samples

3. On probability paper plot the mid-point of each interval versus the percent probability plot positions. Draw a straight line through the data points. See Figure 8-5.

4. From the plot obtain the 50 percent value.

   50 percent value $\simeq \bar{X} \simeq 687$ mg/l

5. Calculate the standard deviation

$$\sigma = \frac{\text{value at 84.13 percent - value at 15.87 percent}}{2}$$

$$= \frac{990 - 380}{2}$$

$$= 305 \text{ mg/l}$$

6. Calculate the variance, S^1

$$S' = \sigma^2$$

$$= (305)^2$$

$$= 93{,}025 \text{ mg}^2/1^2$$

By analysis of the data in this example, it was shown that the average or mean value was approximately 690 mg/l with a standard deviation of about 300 mg/l. In essence this indicates that it can be expected that the BOD value of subsequent samples, collected and analyzed under identical conditions, would have a value between 390 and 990 mg/l, 68 percent of the time. This information could be of value in the design of waste treatment systems, and may also serve as a check against future analyses, since BOD values falling outside this range should be suspect of possibly being caused by other than normal conditions. Other values, such as the 90 or 95 percent probability levels may also be chosen from Figures 8-4 or 8-5, which could be of value in developing confidence limits of a monitoring program or in the design of treatment facilities. The variance value was found to be of little use in this example except in calculation of the standard deviation. The reader is directed to the references for specific uses of this function.

8.3.3 Correlation of Specific Parameters

One other important statistical function, not illustrated in the above example, is correlation between two parameters, such as BOD_5 and TOC. This can be determined by relating the paired parameters to each other in order to obtain a functional relationship in the form:

$$Y = A + BX$$

Where:

A and B are coefficients

By the method of least squares curve-fitting, the coefficients can be calculated. A standard computer program can be developed, or through the use of programs already available in computer libraries, these coefficients, plus the correlation coefficient, can be more readily evaluated. The measure of the "goodness of fit" of the resulting curve plotted from the values of X, Y, A, and B is known as the "coefficient of correlation," r.

The values of A, B, and r can be calculated by the following formulae:

$$A = \frac{\Sigma X^2 \Sigma Y - \Sigma X \Sigma XY}{n X^2 - (X)^2}$$

$$B = \frac{n \Sigma XY - \Sigma X \Sigma Y}{n \Sigma X^2 - (\Sigma X)^2}$$

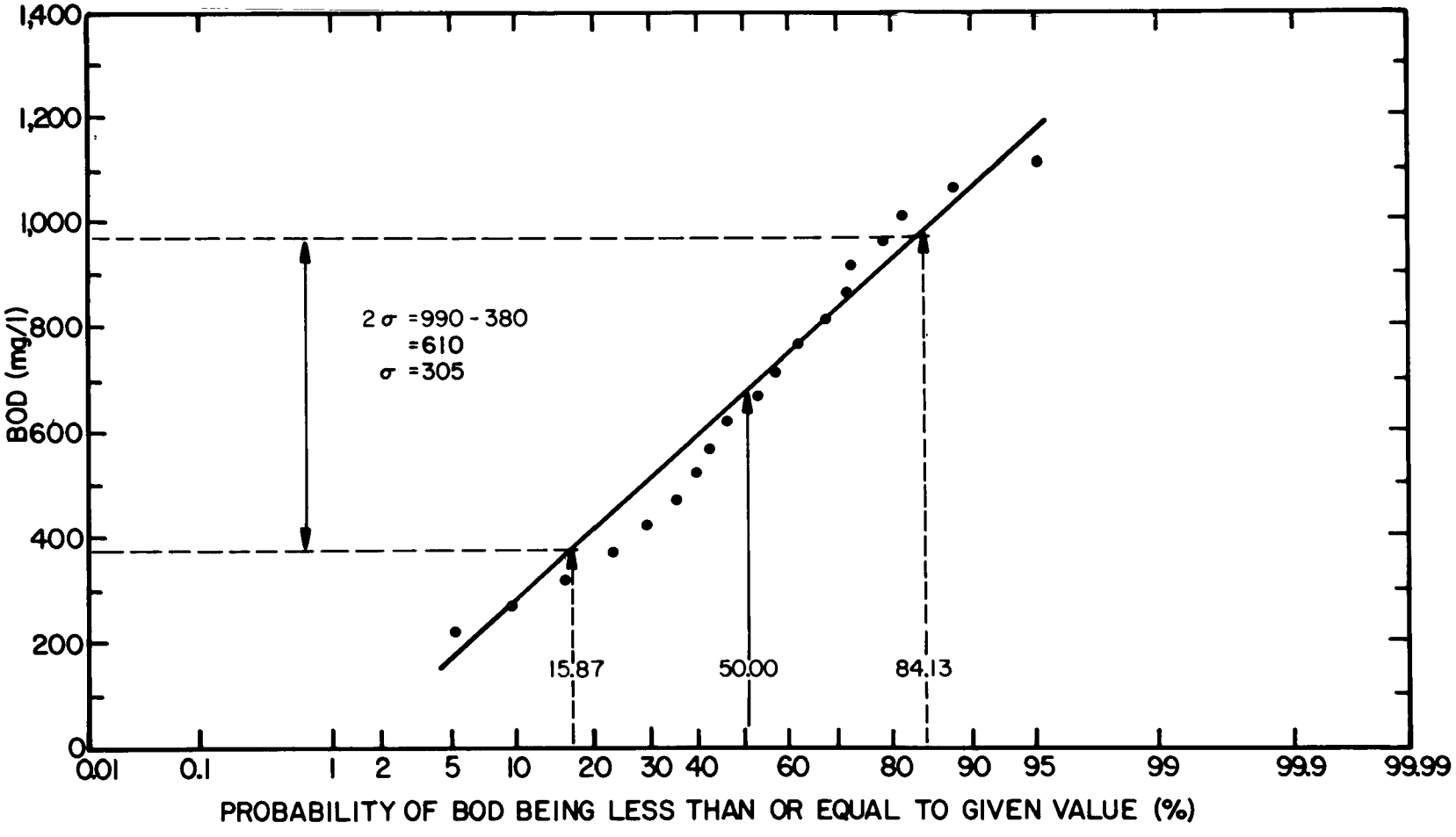

Figure 8-5. PROBABILITY PLOT OF GRAPHICAL METHOD II

$$r = \frac{n\Sigma XY - \Sigma X\Sigma Y}{\sqrt{[n\Sigma X2 - (\Sigma X)2]\ [n\ \Sigma Y2 - (\Sigma Y)^2]}}$$

The correlation coefficient must be in the range $0 \leq |r| \leq 1$, with $r = 1$, corresponding to a perfect fit and $r = 0$ indicating that no relationship exists between X and Y.

To interpret the meaning of r, Table 8-4 can be used. This gives the value of r which can be expected at levels of significance of one and five percent. The levels of significance, i.e., one percent and five percent represent a 99 and 95 percent level of probability of true correlation. If the absolute value of the calculated r exceeds the value of r chosen from the table, it can be concluded that correlation does exist.

The values of v represent the "degrees of freedom," which in statistical terms is equal to the total number of data points minus one. For example, suppose that 101 values of TOC and BOD were correlated and the correlation coefficient was calculated to be 0.240. Then it can be seen from Table 8-4 that at 101 data points (v = 101-1 = 100) the value of r is 0.194 for a 95 percent confidence level. Because 0.240 is greater than 0.194, there is greater than 95 percent chance that there is a true correlation of the paired parameters; in this case BOD and TOC. If r had been greater that 0.254, the confidence level would have been 99 percent or greater.

Consequently, if a 95 percent confidence level can be established as explained above, the least squared method may be then used to determine the actual correlation between BOD and TOC.

Generally, the correlation coefficient is first determined to establish that a correlation exists between two parameters. If a correlation is established, then the least squares method will develop the coefficients to predict the respective parameters, e.g., BOD, as a functionof TOC. If no correlation exists the development of parameters by the least squares method is meaningless.

8.3.4 Specific Application

Data collected through a waste effluent survey of a tomato processing operation are shown on Figure 8-6. Statistical probability plots were prepared as shown in Figures 8-7a, 8-7b, and 8-7c. Information from these plots, along with other data collected during the survey resulted in the development of a reliable flow and material balance diagram. This is shown in Table 8-5. A schematic of the process and sewer layout is shown in Figure 3-1.

8.4 References

1. *Handbook for Analytical Quality Control in Water and Wastewater Laboratories,* EPA, Technology Transfer, 1972.

2. Eckenfelder, W. W., *Industrial Water Pollution Control,* McGraw-Hill Book Co., 1966.

3. Eckenfelder, W. W., *Water Quality Engineering for Practicing Engineers,* Barnes & Noble, Inc., New York, 1970.

4. Neville, A. M., and J. B. Kennedy, *Basic Statistical Methods for Engineers and Scientists,* 4th Printing, International Textbook Co., Scranton, Pennsylvania, 19700.

5. *Standard Methods for the Examination of Water and Wastewater.* 13th Edition, American Public Health Association, 1970.

6. Velz, J. C.C., "Graphical Approach to Statistics," *Water and Sewage Works,* 1950.

TABLE 8-4

VALUES OF CORRELATION COEFFICIENT r FOR TWO VARIABLES

	Percent Level of Significance	
v	Five	One
1	0.997	1.000
2	0.950	0.990
3	0.878	0.959
4	0.811	0.917
5	0.754	0.874
6	0.707	0.834
7	0.666	0.798
8	0.632	0.765
9	0.602	0.735
10	0.576	0.708
11	0.553	0.684
12	0.532	0.661
13	0.514	0.641
14	0.497	0.623
15	0.482	0.606
16	0.468	0.590
17	0.456	0.575
18	0.444	0.561
19	0.433	0.549
20	0.423	0.537
21	0.413	0.526
22	0.404	0.515
23	0.396	0.505
24	0.388	0.496
25	0.381	0.487
30	0.349	0.449
35	0.325	0.418
40	0.304	0.393
45	0.288	0.372
50	0.273	0.354
60	0.250	0.325
70	0.232	0.302
80	0.217	0.283
90	0.205	0.267
100	0.195	0.254
125	0.174	0.228
150	0.159	0.208
200	0.138	0.181
300	0.113	0.148
400	0.098	0.128
500	0.088	0.115

TABLE 8-5

FLOW AND MATERIAL BALANCE FOR A TOMATO PROCESSING OPERATION

(Refer to Figure 3-1)

Sample Station	1	2	3	4	5	6	7	8	9	10
From	Niagara Washer	Rotary Washer	(1) & (2)	Pasteurizer	Source Cooler	Catsup Finisher	Source Finisher	(1) - (7)	Trimming Table	Main Sewer
To	Sewer	Sewer	Sewer	Sewer	Sewer	Sewer	Sewer	Sewer	Sewer	Outfall
Flow (gpm)	320	270	590	240	170	35	42	1077	140	1217
BOD (lb/day)	650	918	1568	369	132	1891	1866	5826	126	5952
COD (lb/day)	1506	1770	3276	591	200	2648	2774	9489	267	9756
Suspended Solids (lb/day)	495	752	1247	43	20	6028	5044	12382	252	12634

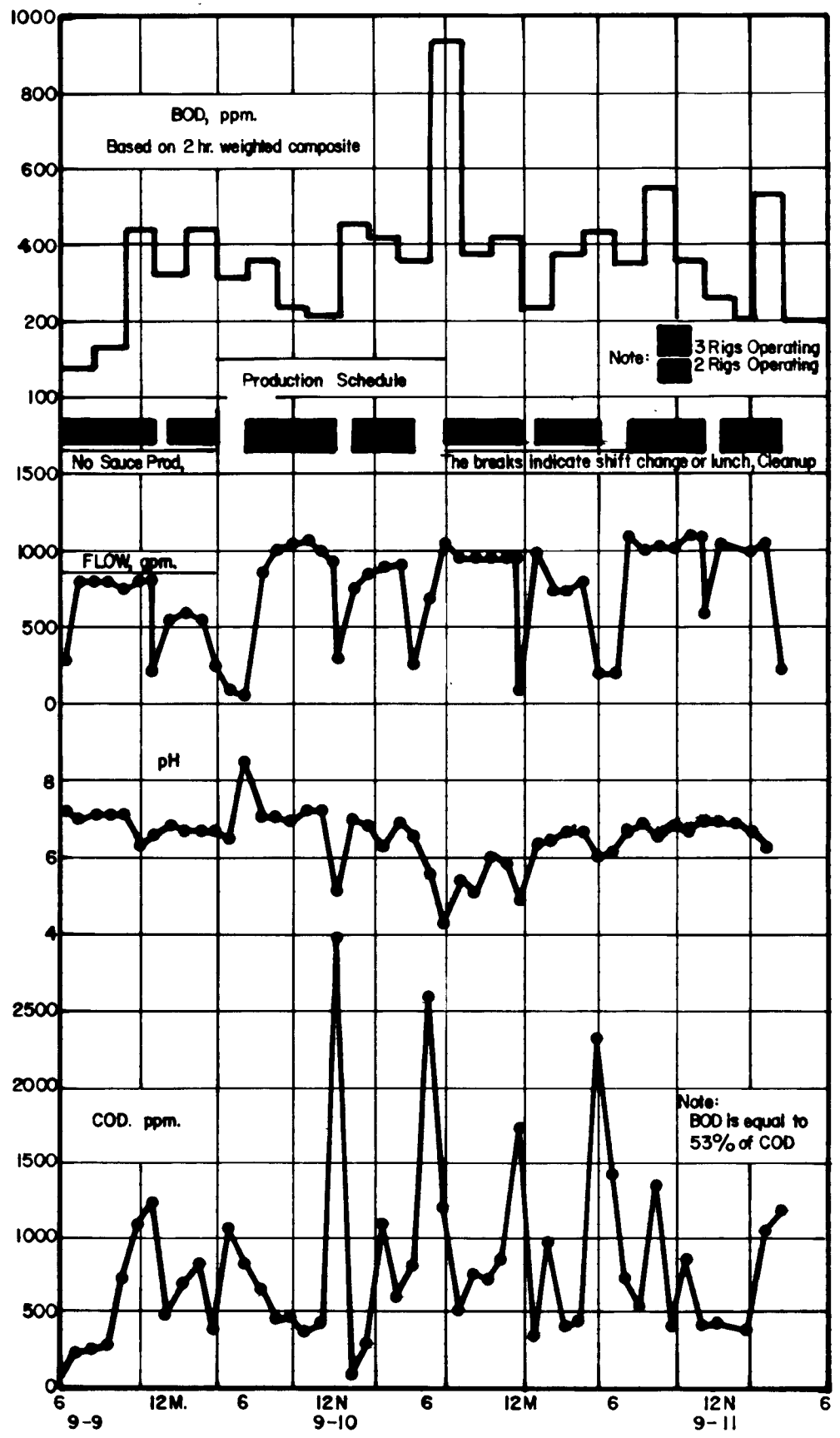

Figure 8-6. RAW DATA FROM WASTE SURVEY FOR TOMATO PROCESSING OPERATION

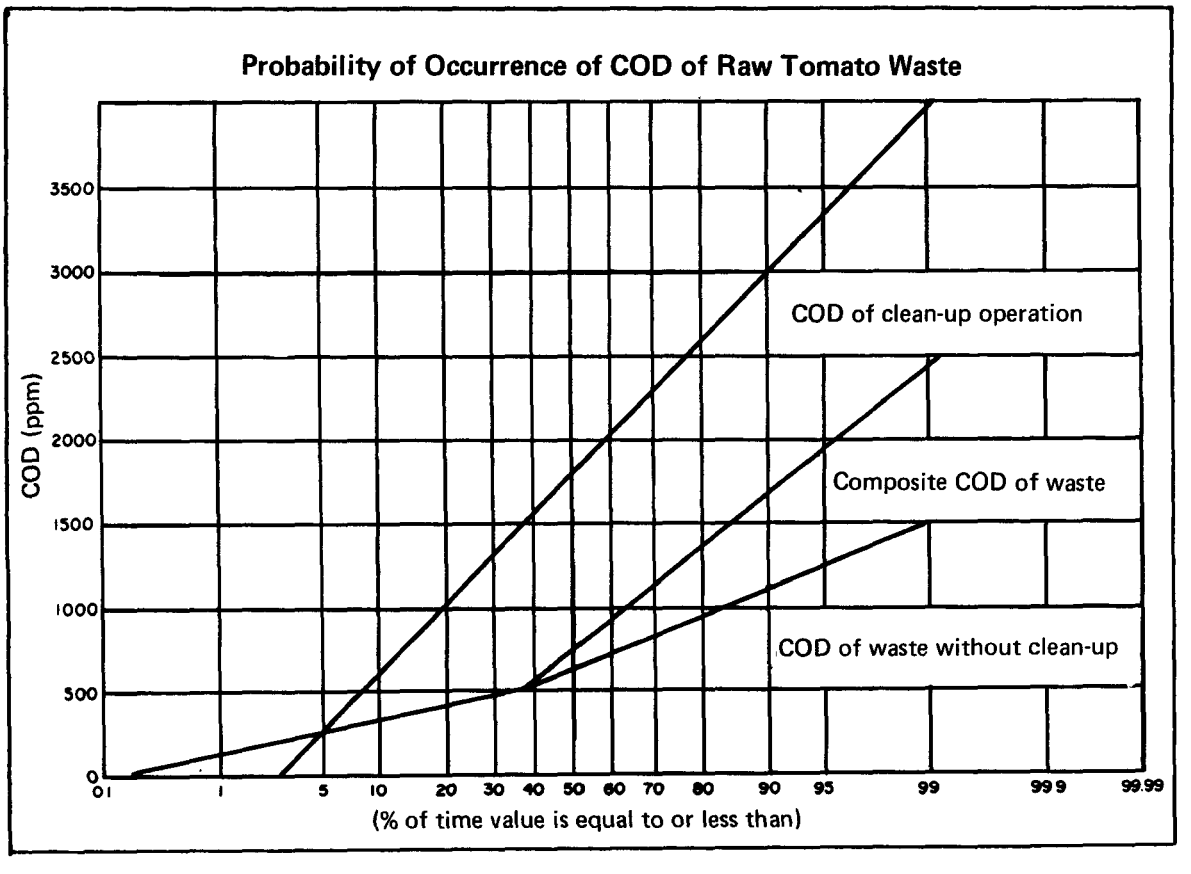

Figure 8-7a. PROBABILITY OF OCCURRENCE OF COD OF RAW TOMATO WASTE

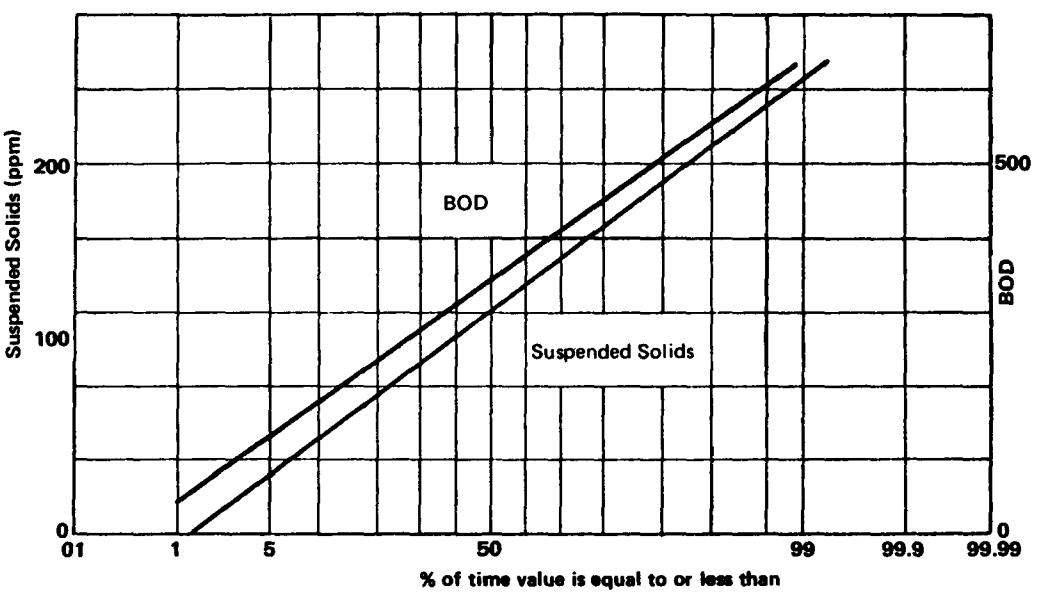

Figure 8-7b. PROBABILITY OF OCCURRENCE OF BOD AND SUSPENDED SOLIDS IN RAW WASTE

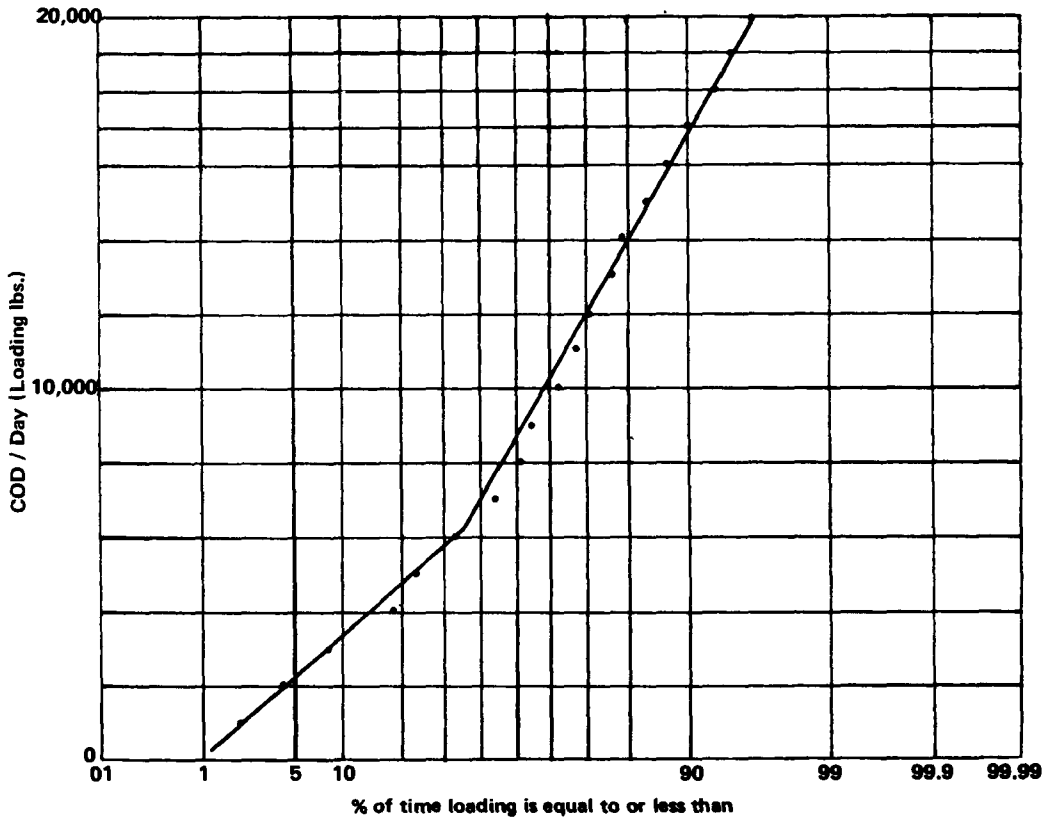

Figure 8-7c. PROBABILITY OF OCCURRENCE OF TOMATO WASTE LOADING

Chapter 9
AUTOMATIC MONITORING

9.1 Introduction

In a water quality management program, automatic monitoring of several water characteristics has proven to be a dependable method of control. In wastewater treatment, numerous parameters are used for operational control; however, the number of parameters that can be automatically measured without difficulty are limited.

Sensors for automatic monitoring of wastewaters are especially sensitive to the presence of interferences. Thus, great care should be exercised in the selection of automatic equipment in order to ensure that it will function satisfactorily in the wastewater to be monitored.

Automatic monitoring has the following advantages:

1. The parameters of interest are recorded on a continuous basis and a clear picture is obtained of the variation of the recorded parameters with time. It should be noted, however, that continuous flow measurement data must also be available in order to calculate the total amount of pollutants flowing on a daily basis.

2. There is a shorter time lag between sampling and analysis than in manual sampling. In addition, problems resulting from storage of samples are eliminated.

2. Automatic monitoring systems can be combined with an alarm system that will give advance warning when a high concentration of an undesirable parameter occurs. For example, an automatic conductivity measurement instrument could be set to detect high values. When this occurs a by-pass valve could be opened and the waste stream directed to a storage basin from which it could be gradually added into the waste treatment system.

Disadvantages of automatic monitoring, are:

1. The sensor of the system may not be capable of registering unusual circumstances that occur at the place of sampling.

2. The initial cost of automatic monitoring is high.

3. The wastewater characteristics need to be known before installing automatic monitoring equipment.

4. At present, only relatively simple continuous measurements are dependable, such as pH, temperature, conductivity, and dissolved oxygen.

Automatic monitoring can be of great value when it is combined with the operation of treatment facilities. The sensor could be a simple electrode, such as is used to monitor pH, or it may be a much more sophisticated piece of equipment. Normally, data is collected on a strip chart recorder; however, other appurtenances, such as pumps or valves, may also be activated by the sensor. Problems to be anticipated when using automatic monitoring equipment include:

1. Loss of calibration. Regular maintenance is necessary to prevent errors.

2. The flow system and sensor may fail to operate correctly when suspended bacteria are permitted to grow. Therefore, regular cleaning of the system is necessary. Self-cleaning sensors are available and have a definite advantage when used in situations requiring frequent cleaning.

3. Mechanical damage may occur if the intake system or the sensor is not protected by a screen.

4. Miscellaneous problems can be expected to result from power failure, mishandling, pump difficulties, vandalism, etc.

5. Interferences cause many problems and should be known before installing the monitoring system.

Table 9-1 presents the experience that The Environmental Protection Agency (EPA) had with the measurement of water quality parameters in *surface* waters. There are two general methods used in automatic monitoring to detect and measure parameters; they are in situ measurements by electrochemical transducers and automated wet chemistry.

TABLE 9-1

DATA LOST BY EPA IN 629 DAYS

Parameter	Data Lost due to Sensor Percent	Data Lost due to Recorder Percent	Data Lost due to Pump Percent	Data Lost due to Power Percent	Total Data Lost Percent
Dissolved Oxygen	5	7	8	1	21
pH	21	7	8	1	37
Turbidity	0	7	8	1	16
Conductivity	0	7	8	1	16
Temperature	0	7	8	1	16
Solar Radiation Intensity	2	7	0	1	10

It is important to realize that the costs of preparing the sample in a form suitable for analysis by the automatic instrument can add significantly to the cost of the total automatic monitoring system. Figure 9-1 is an example of a sampling system which provides a clarified sample for analysis. It should also be noted that the EPA experience was with surface water, not wastes.

9.2 Control Systems

Many types of control systems have been designed for use in wastewater treatment systems and for recycling practices. Examples of control systems for neutralization, oxidation and reduction will be presented. A control system may consist of a pH or ORP electrode connected by a controller which then reports to a recorder. The controller regulates the addition of chemicals.

In any monitoring system, various types of valves may be used, depending on the consistency of the effluent quality and the type and dosage of chemicals to be added. Some of the different types of flow controllers of interest are on-off, proportional, reset derivative and proportional-to-flow controllers.

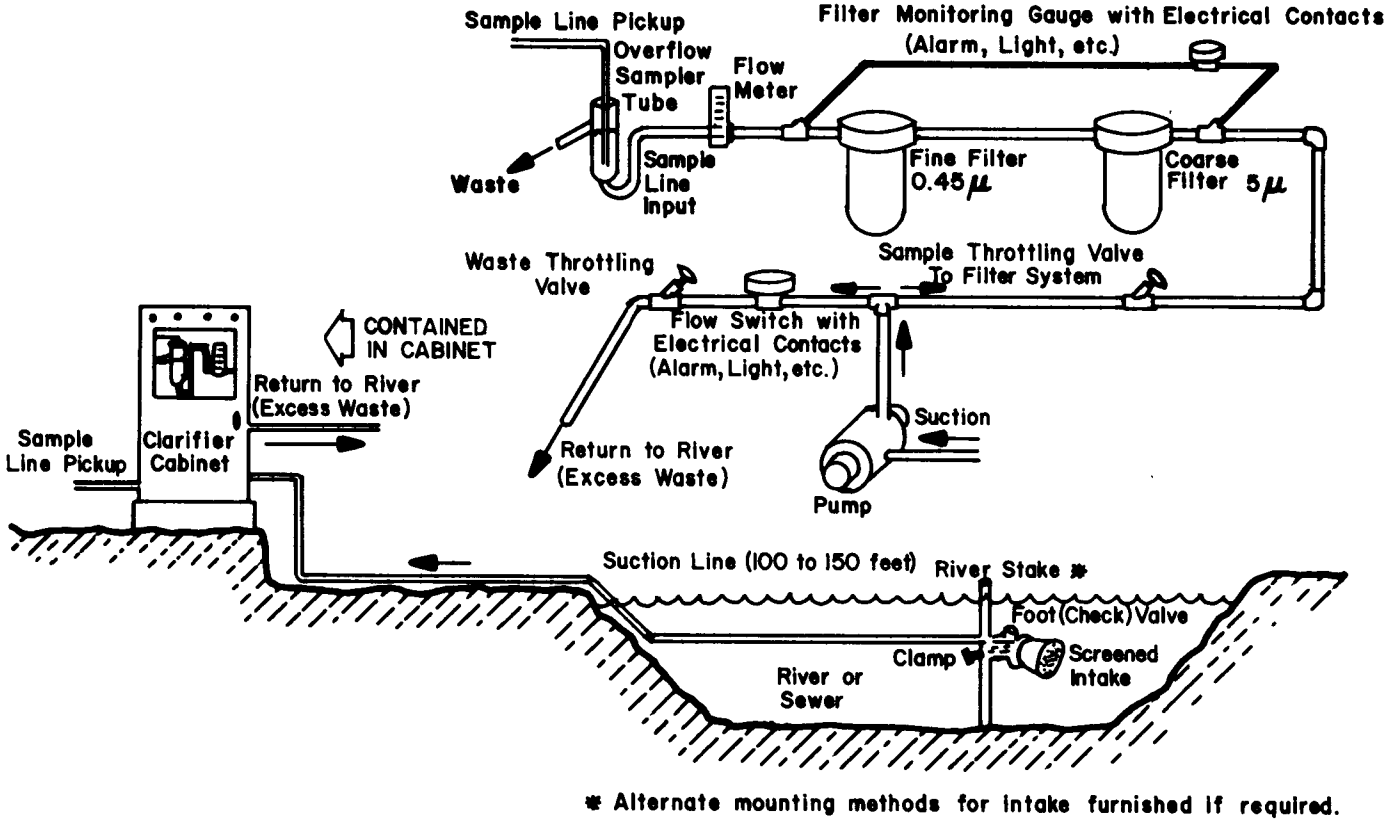

Figure 9-1. CONTINUOUS WATER SAMPLING AND CLARIFICATION SYSTEM

1. On-Off Controller - The on-off controller is the least expensive of these devices. If the concentration of the pollutant in the wastewater exceeds a certain limiting value, the valve opens and chemicals are added until the concentration of the pollutant in the effluent is lowered to the acceptable predetermined value. This type of system is applicable to relatively large waste flows for which an overdosage of chemicals does not influence the effluent quality.

2. Proportional Controller - The proportional controller is more advanced and produces consistent effluent quality. The proportional controller, in its simplest application regulates the amounts of chemicals or diluent in proportion to a deviation from a set-point as a means of controlling the concentration of a pollutant at an acceptable value.

3. Reset Derivative - The reset derivative system regulates the speed with which a valve opens to add reagents. The valve speed depends on rate of deviation from a set-point of the pollutant being measured. This control system is not recommended for waters with high suspended solids content.

4. Proportional-to-Flow Controller - If the quality of the wastewater is constant, but the flow varies, it is recommended that the control valve be connected to a flow meter rather than to a pH or ORP electrode. With a flow meter, the chemical dosage to be added will be proportional to the flow.

The quality of effluent can be monitored simply and economically for systems not sensitive to an occasional over or under dosage of chemicals. Similarly, for reuse monitoring, a simple and economical system can be designed to add chemicals directly to the reuse line, as is the practice in the chlorination of washwater in the food processing industry. Figure 9-2 shows the continuous measurement of turbidity to control the addition of fresh water in a hydraulic conveyance system. When the measured value of turbidity exceeds the allowable value, a valve is opened and the turbid water is diluted with fresh water.

9-3. Examples of Automatic Monitoring Systems

Some of the more common control systems that utilize automatic monitoring are neutralization with pH control, chromium removal, aeration, and suspended solids.

9.3.1 Neutralization with pH Control

The automatic control of pH for the neutralization of wastestreams is most troublesome and presents many problems, including:

1. The relationships between the amount of reagent needed and the controlled variable; pH being non-linear.

2. The pH of the wastewater can vary rapidly over a range of several units in a short period of time.

3. The flow can change while the pH is changing, since the two variables are not related.

4. The change of pH at neutrality is so sensitive to the addition of a reagent that even slight excesses can cause large deviations in pH from the initial setpoint.

5. Measurement of the primary variable, pH, can be affected by materials which coat the measuring electrodes.

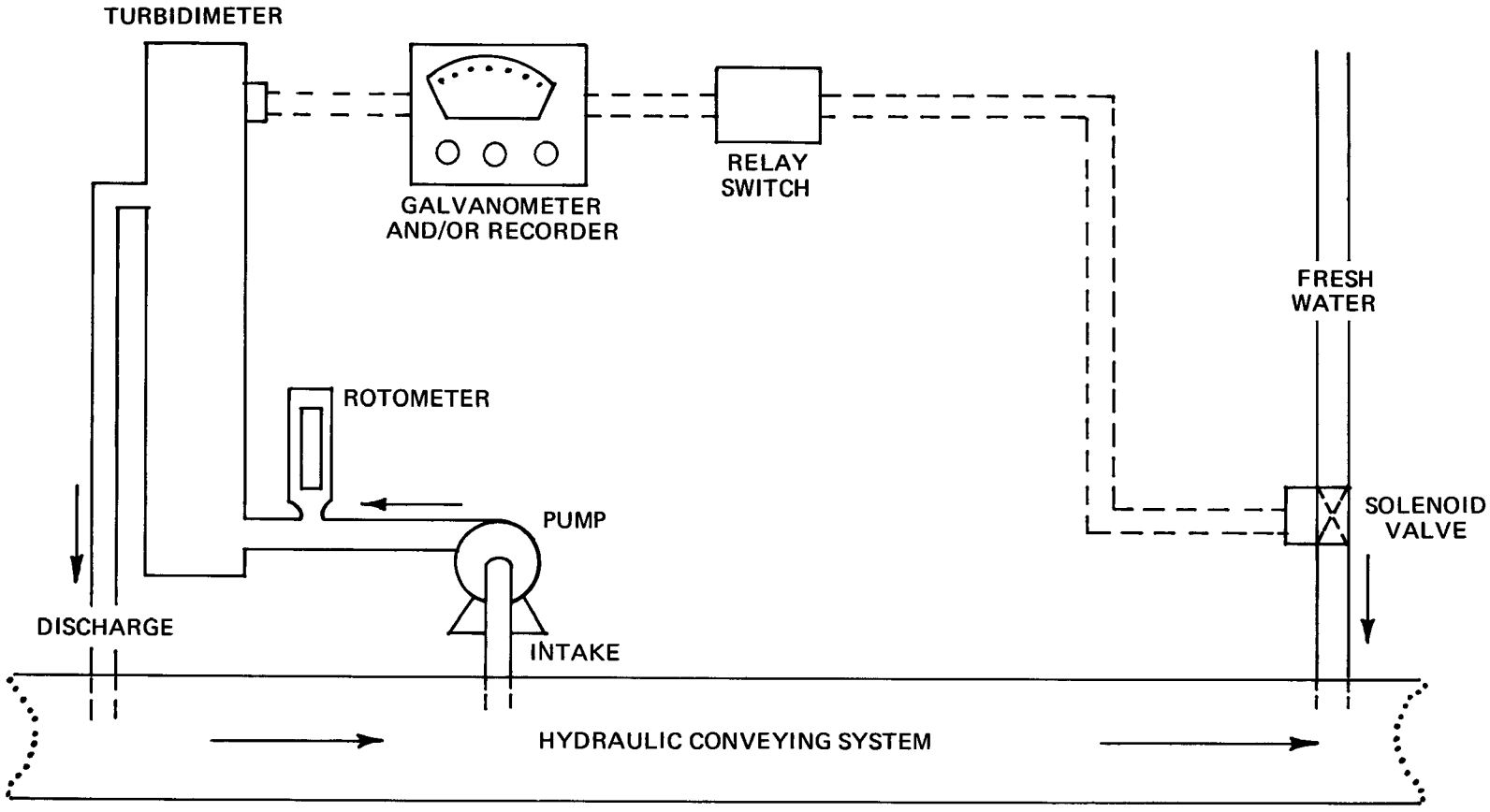

Figure 9-2. CONTINUOUS MEASUREMENT OF TURBIDITY TO CONTROL ADDITION OF FRESH WATER TO HYDRAULIC CONVEYING SYSTEM

6. The buffer capacity of the waste has a profound effect on the relation between reagent feed and pH and may not remain constant.

7. A relatively small amount of reagent must be thoroughly mixed with a large volume of liquid in a short period of time.

9.3.2 Control System for Continuous Chromium Removal

When the daily volume of waste exceeds 30,000 to 40,000 gallons, batch treatment for chrome removal is usually not feasible because of the large tankage required. Continuous treatment requires a tank for acidification and reduction, a mixing tank for lime addition, and a settling tank. The retention time in the reduction tank is dependent on the pH employed but should be at least four times the theoretical time for complete reduction. Twenty minutes will usually be adequate for flocculation and final settling should be designed for an overflow rate less than 500 gal/day/ft^2.

In cases where the chrome content of the rinse water varies markedly, equalization should be provided prior to the reduction tank in order to minimize fluctuations in the chemical feed system. The fluctuation in chrome content can be minimized by provision of a drain station before the rinse tanks.

Successful operation of a continuous chrome reduction process requires adequate instrumentation and automatic control. Redox and pH controls are provided for the reduction tank and the addition of lime is modulated by a second pH control system. A continuous treatment system is shown in Figure 9-4.

9.3.3 Automatic Aeration Control

Some of the more modern water pollution control plants are using automatic aeration control to reduce operating costs. Waste strength, flow rate, and consequently, oxygen demand, may vary greatly over any period in a given plant. Constant rate aeration may therefore be uneconomical and inefficient. A sometimes used, but not common, practice has been to provide additional aeration as waste strength and oxygen demand increases, or reduce air supply as oxygen demand decreases. Such control is coarse and inefficient since aeration rate is changed step-wise and does not necessarily equal oxygen demand. Furthermore, processes so controlled are subject to upset from shock loading.

Automatic control, on the other hand, is a feedback control system when dissolved oxygen concentration is held constant by varying the aeration rate to match the oxygen demand. Figure 9-3 illustrates several control options. For example, in smaller operations, variable speed positive displacement blowers may be used with the speed being controlled by a signal from the oxygen analyzer. In larger installations, constant speed centrifugal blowers or mechanical surface aerators are more generally favored because of greater efficiency, lower noise and better wear. In the use of either variable speed or centrifugal blowers, attention must be given to operation within a limited range of output from rated capacity. This prevents overheating or excessive wear of the motors. Although not shown in Figure 9-3 , an air flow recorder-controller may be used to operate a bypass valve off the main header, thus ensuring blower operation within operating limits.

Another system (not shown in Figure 9-5) which has found some use, incorporates an automatically-operated control valve on the air intake line to a centrifugal blower. Also, as shown, influent flow rate may be measured and used along with dissolved oxygen in a cascade control system.

9.3. 4 Suspended Solids Monitoring

Suspended solids may be monitored by use of commercially available meters. For example, Biospherics Incorporated produces automatic suspended solids measuring devices. Two types are available. One operates

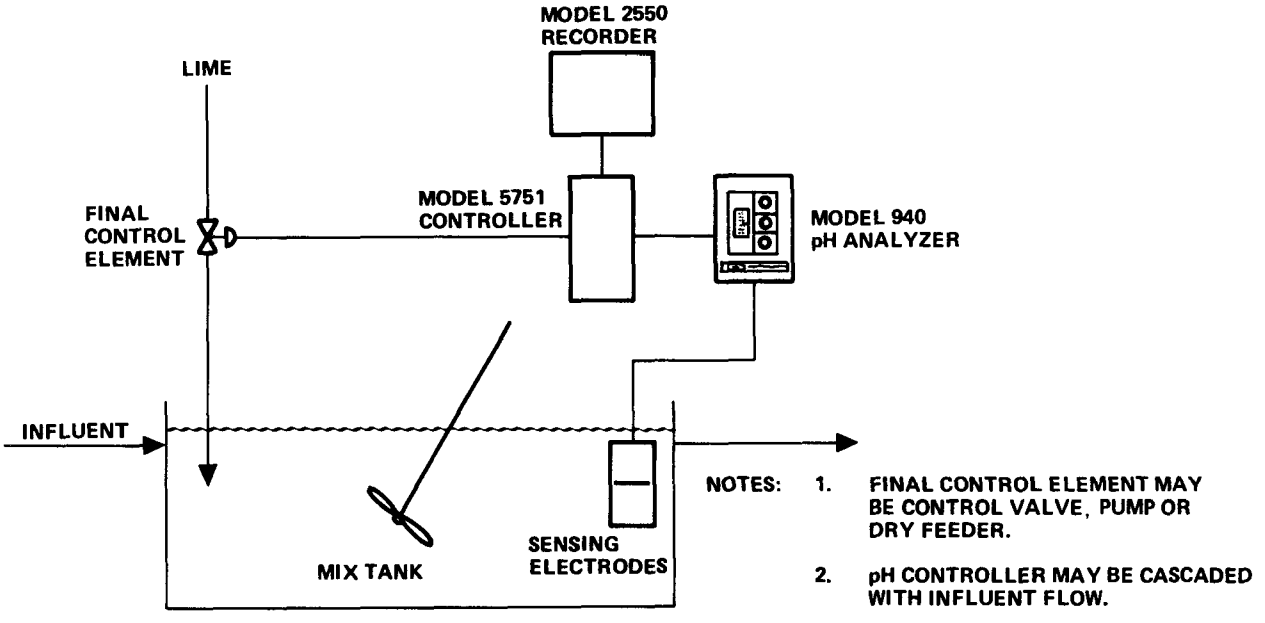

Figure 9-3. ELEMENTS OF pH CONTROL SYSTEM

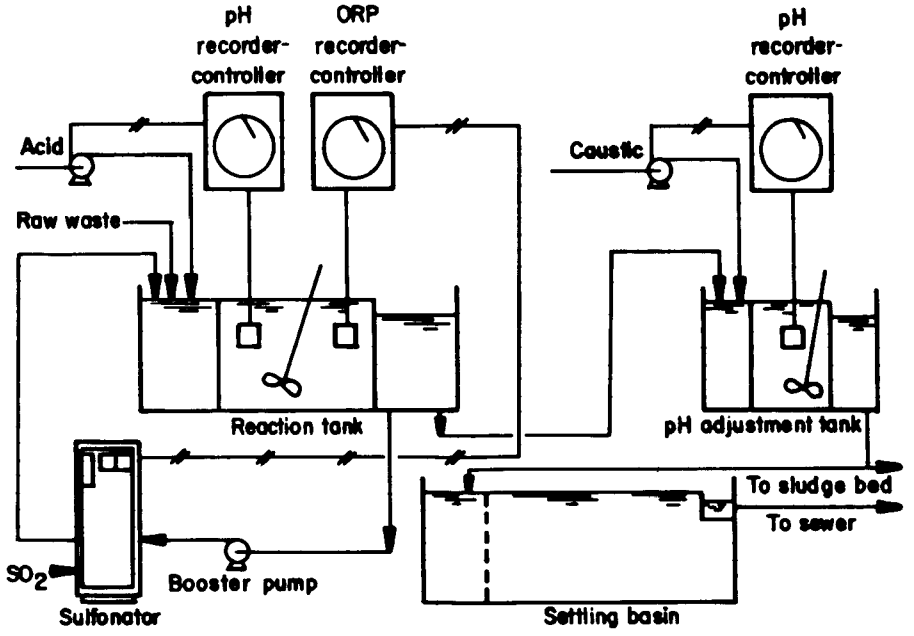

Figure 9-4. CONTINUOUS CHROME-TREATMENT SYSTEM

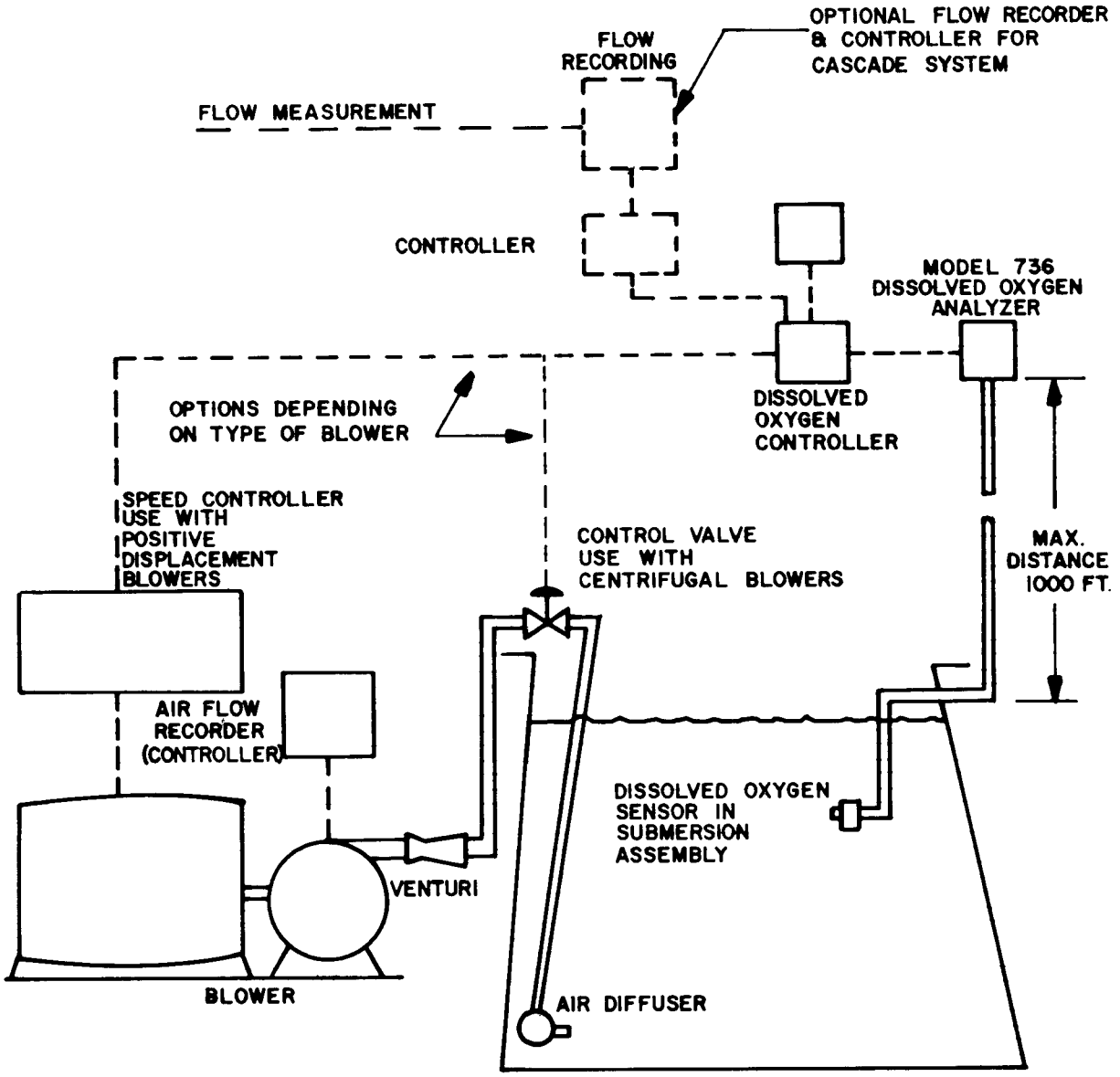

Figure 9-5. DISSOLVED OXYGEN PROBE SYSTEM

in concentrations of suspended solids ranging from 1 to 3,000 mg/1 and the other in the range from 200 - 20,000 mg/1. The device can be attached to pipes or installed in open tanks or channels.

The suspended solids meter operates with a photoelectric cell using a piston to withdraw a sample from the pipe or tank. A light source and two photocells are built into the sensing head, which measures the optical density of the liquid during each sampling cycle and the output of the meter can be connected to an alarm system. A seal on the end of the piston keeps the glass tube clean. The cost of such a unit is approximately $1,500.

9.4 Effluent Monitoring by Biological Methods

Because the protection of aquatic life in receiving waters is a major goal of effluent treatment, exposure of living organisms to the effluent itself has certain advantages. Results may be visually and dramatically apparent. Fish are usually the test organisms, but other forms of aquatic life are sometimes used.

Fish aquaria can be used to demonstrate the effect, or more important, the lack of effect, of the effluent on the fish selected as test organisms.

Continuous exposure of fish to an effluent, whether or not diluted, is a severe test that can indicate their ability to withstand short-term high-waste concentrations, as well as average concentrations. This method of monitoring, however, does not indicate whether or not the effluent is harmful to other forms of plant or animal life that also warrant protection.

An advantage is gained by the stepwise addition of chemicals to gradually change the pH. In the first reaction tank, the pH is raised to about 4 or lowered to 10. In the second reaction tank, the pH is adjusted to the desired end-point. If the wastestream is subject to slugs or spills, a third reaction tank may be desirable in order to effect complete neutralization. Figure 9-3 shows the elements of a simple pH control system.

9.5 References

1. The ABC's of Monitoring, Orion Research Incorporated, Volume Numbers 5 and 6, May; June, 1970.

2. Durst, R. A., Editor, Ion-Selective Electrodes, Proc. of a Symposium Held at the National Bureau of Standards, Gaithersburg, Maryland, 1969.

3. Eckenfelder, W. W. and D. L. Ford, *Water Pollution Control, Experimental Procedures for Process Design,* Pemberton Press, Jenkins Publishing Company, 1970.

4. English, J. M., et al., "Pollutional Effects of Outboard Motor Exhaust Field Studies," JWPCF, 35:1112, 1963.

5. Jungck, P. R. and E. T. Waytowicn, "Practical pH Control," Industrial Water Engineering, Feb; March, 1972.

6. Maln, F., "Water Pollution Control in the Emscher-Lippe Area," Proceedings , Water Quality Management and Pollution Control Seminar, Budapest, May, 1972.

7. *Manual of Disposal of Refinery Wastes, Volume of Liquid Wastes,* First Edition, American Petroleum Institute, 1969.

8. "Monitor Offers Continuous TOC Data," Environmental Science & Technology, Vol. 3, Nov., 1969.

9.6 Additional Reading

1. Cairns, J. A., "Biological Yardstick for Industrial Pollution," *Ind. Water Eng.* 2:10, 1965.

2. Hach, C. C., "Understanding Turbidity Measurement," *Ind. Water Eng.* Feb/Mar 1972.

3. Henderson, C. and C. M. Tarzwell, "Bioassays for Control of Industrial Effluents," *Sewage Ind. Wastes* 29:1002, 1957.

4. Hey, A. E., et al., "An Automated System for the Determination of COD," *Water Research,* 3:873, 1969.

5. Krenkel, P. A., Editor, *Proceedings of the Specialty Conference on Automatic Water Quality Monitoring in Europe, Technical Report No. 28,* Department of Environmental and Water Resources Eng., Vanderbilt University, 1971 .

6. Mancy, K. H., *Instrumental Analysis for Water Pollution Control,* Ann Arbor Science Publishers, Inc., 1971.

7. Patrick, R., and M. H. Hahn, "The Diatometer--a Method for Indicating the Conditions of Aquatic Life," *Proc. APJ,* 36, III, 332, 1956.

Chapter 10
THE CONTINUING PROGRAM

10.1 Introduction

After a waste monitoring program has been developed, the next phase is to incorporate it into the daily routine of the manufacturing facility with a minimum of disruption; however some changes are to be expected after a period of on-line testing. Initially, to ensure the success of the program, the attitude of the management should be conveyed to the production staff who will be responsible for implementation.

It is extremely important that the waste monitoring and waste treatment systems be considered an integral portion of plant operations. One simple technique for accomplishing this is to send reports on the overall results to key production supervisors, along with the results of manufacturing operations in their specific plant areas. Also, deviations in normal operation from a waste loading standpoint should be noted in much the same way manufacturing deviations are emphasized. Production and operations personnel should be encouraged to judge the performance of their production areas by the variability in their waste load.

The program should be reviewed shortly after initiation (allowing sufficient time for "start-up" problems to be resolved) for effectiveness. Unexpected correlations between two parameters may exist which will allow reductions in analytical time and costs. The general smoothness of the program should be checked, and the support of management reaffirmed. Bottlenecks in analytical procedures should be identified and resolved. Proper operation and maintenance of automatic sampling and monitoring equipment, if used, should be verified. *Care should be taken to avoid the mistake of initiating a program on paper and not thoroughly checking for effectiveness in the plant itself.*

The continuing effectiveness of a monitoring program and operation of treatment facilities will depend on the training of technicians, the continuing awareness of influences of production changes on the monitoring program, the analysis of data and a comprehensive maintenance program for apparatus and treatment facilities.

10.2 Training Technicians

Water pollution control is an evolving field of science and requires specially trained personnel. Details about a comprehensive training program for technicians who are responsible for the operation of monitoring equipment and treatment facilities are presented in Chapter 12. Technicians should be kept informed about the latest developments in the field. A discussion of problems with other industries having the same type of facility or using the same type of equipment can be helpful. When new information is received from the manufacturer about the operation or maintenance of equipment, this information should be passed directly to those who are responsible for the functions. Periodicals in the field of water pollution control can be useful in obtaining up-to-date information concerning the newest developments.

10.3 Production Changes

When the decision is made by plant management to increase production, to change production schemes, or to alter raw materials, it should be realized that these changes may influence the sampling and monitoring program as well as the operation of the treatment facilities. Oftentimes, the monitoring personnel may be separate from production staff and close coordination is essential to avoid misinterpretation of data on the part of the monitoring staff during production changes.

10.4 Analysis of Data

A well planned program of data acquisition is important. The results of a monitoring program should be treated as critically as is production data. Graphical plots may be used to present the trends of parameters and possible correlations with production results. Tests for correlations between various water parameters should be established to save time and money in the monitoring program.

10.5 Maintenance and Trouble-Shooting

The manufacturer who supplies the apparatus for sampling and analytical work can provide instruction manuals for the use and maintenance of the equipment as well as trouble-shooting diagrams to help locate areas of malfunction.

The operational control of all treatment facilities, bench-scale, pilot scale, or prototype units, requires continuous attention to detect potential problems and to specify proper remedial action when needed. This is true regardless of the degree of automation or instrumentation inherent within the plant design. Although it is difficult to describe operational control procedures for all unit processes within the waste treatment spectrum, some of the more common problems associated with the operation of waste treatment facilities are described and remedies suggested in Reference 1.

10.6 References

1. *Procedural Manual for Evaluating the Performance of Wastewater Treatment Plants,* Environmental Protection Agency, 1972.

10.7 Additional Reading

1. Eckenfelder, W. W. and Ford, D. L., *Water Pollution Control,* Pemberton Press, Austin, Texas, 1970.

2. *Operation of Wastewater Treatment Plants,* Water Pollution Control Federation Manual of Practice, No. 11, 1970.

3. *Sewer Maintenance,* Water Pollution Control Federation Manual of Practice, No. 7, 1966.

4. "Control of Wastewater Treatment Plants -- The Engineer as an Operator," *Water and Sewage Works,* 188:26, 1971

Chapter 11
SPECIAL CONSIDERATIONS FOR MUNICIPAL SYSTEMS

11.1 Introduction

Frequently a municipality must decide on whether a specific industrial discharge should be allowed into the municipal sewerage system and, if so, under what conditions. In the past, local municipal ordinances have made it relatively easy for industry to discharge into a municipal system, provided that certain toxic and deleterious materials are removed prior to discharge. However, many problems have developed either because the municipality was not prepared for the type of waste that entered the sewer, or the industry was not quite aware of what it was actually discharging to the treatment facility. A proper monitoring system both at the combined treatment facility and at the industrial site itself can help detect and avoid problems before they occur, and can pinpoint the source of the problem and help correct it to prevent future undesirable effects.

11.2 Deleterious Effects on Joint Systems from Industrial Discharges

Cognizance of non-compatible constituents and awareness of the potential harm which these and other compounds could cause to receiving systems, will aid in establishing an adequate monitoring program to protect the treatment facilities. For various reasons, a number of constituents are not allowed into municipal systems. For example, acids and corrosive materials would damage the conveyance system. Dangerous gases and explosive materials, such as gasoline, are limited because of potential hazards to treatment plant personnel. Other constituents, such as heavy metals or toxic organics, may actually inhibit the biological organisms at the facility.

When undesirable constituents are known to be present in an industrial wastestream, pretreatment of the wastes must be effected to reduce these constituents to acceptable levels. Proper monitoring at the site of a pretreatment facility is essential and, if there is a possibility of accidental spills or discharges escaping pretreatment, a sophisticated monitoring and diversion system may be required at the joint municipal-industrial treatment plant. Table 11-1 presents certain deleterious effects on common unit treatment processes of a typical treatment facility. The possible effects of several objectionable industrial waste constituents, usually restricted by sewer ordinances, are discussed below:

1. Flammable Oils - Examples of flammable oils are crude gasoline, benzene, naphtha, fuel oil, and mineral oil. These substances are not soluble and tend to collect in pools, thus creating potential explosive conditions. When methane gas is mixed with flammable oils, a very powerful explosion may result.

2. Toxic Gases - Toxic gases such as H_2S, CH_4 and HCN are often present or may be formed in industrial discharges. Wastewaters with high quantities of sulfates can cause problems in anaerobic decomposition, due to the formation of H_2S. Also cyanide combines with acid wastes to form the extremely toxic gas, HCN.

3. Oils and Grease - A municipal plant generally does not have facilities for the removal of significant quantities of oils and grease. Pretreatment of wastewater may be desirable to reduce the total concentration of oils and grease (hexane extractables). In general, emulsified oils and greases of vegetable and animal origin are biodegradable and can be successfully treated by a properly designed municipal treatment facility. However, oils and greases of mineral origin may cause problems and these are the constituents generally requiring pretreatment.

4. Settleable Solids - Settleable solids cause obstructions in the sewer system by settling and accumulating. At places where sewage accumulates, anaerobic decomposition may take place, producing undesirable products, such as H_2S and CH_4.

   High settleable solids concentrations may overload the capacity of the treatment plant.

5. Acids or Alkalies - Acids or alkalies are both corrosive and may also interfere with biological treatment. Even neutral sulfate salts may cause corrosion, since the sulfate can be biologically reduced to sulfide and then oxidized to sulfuric acid.

6. Heavy Metals - Heavy metals may be toxic to biological treatment systems or to aquatic life in the receiving water and may adversely affect downstream potable water supplies.

7. Cyanides - Cyanides are toxic to bacteria and may cause hazardous gases in the sewer.

8. Organic Toxicants - Pesticides and other extremely toxic substances in wastewater are objectionable except in very small concentrations. Even if the biological treatment systems are not altered by higher concentrations, toxicants may still damage receiving surface water quality.

TABLE 11-1

DELETERIOUS EFFECTS OF INDUSTRIAL WASTEWATER ON A JOINT MUNICIPAL-INDUSTRIAL COLLECTION SYSTEM AND TREATMENT FACILITY

A. Sewer System

1. Corrosion caused by acids
2. Clogging due to fat and waxes
3. Hydraulic overload by discharge of cooling waters
4. Potential explosion danger with gasolines, etc.

B. Grit Chambers

1. Overloading with high grit concentrations
2. Increased organic content of grit
3. Intermittent flow reduces removal efficiency

C. Screens and Comminutors

1. Overload with excess concentrations
2. Excessive wear on comminutor cutting surfaces by hard materials

TABLE 11-1 (Continued)

DELETERIOUS EFFECTS OF INDUSTRIAL WASTEWATER ON A JOINT MUNICIPAL-INDUSTRIAL COLLECTION SYSTEM AND TREATMENT FACILITY

D. Clarifiers

1. Transient hydraulic loading reduces removal efficiency
2. Scum problems from excessive quantities of oils
3. Impaired effluent quality caused by finely divided suspended solids
4. Excessive sludge quantities with high suspended solids concentrations

E. Sludge Digesters

1. Negative effects on sludge digestion caused by inorganic solids
2. Overload caused by excessive solids
3. Increased scum layers by excessive organic solids
4. pH problems with an industrial wastewater with a high sugar content
5. Toxicants

F. Trickling Filters

1. Clogging of filters and/or distribution arms by finely divided solids
2. Clogging and anaerobic conditions caused by an overload of organics
3. Toxicants

G. Activated Sludge

1. Deterioration in quality with transient loading
2. Excessive carbohydrate concentrations can cause bulking or poor settling sludge
3. Toxicants
4. Foaming problems

11.3 Establishing and Implementing a Monitoring System

Establishment of a monitoring system for joint municipal-industrial treatment facilities should consider both the point of industrial discharge into the sewer and at the joint facility itself. The purpose of monitoring at the industrial discharge is to ensure cognizance of the discharge of certain inhibitory or toxic constituents so that temporary storage might be made immediately at the combined facility. Also, it is desired to gather sufficient composite information to properly assess a surcharge to the industry based on the discharge of constituents specified in the contract.

The reasons for monitoring at the treatment facility itself include establishing a last point of measurement of certain problem constituents so that they may be temporarily stored prior to entering those unit processes with which problems can be expected. It is also desired to have a record of certain compounds which are entering the system so that when a problem occurs, the records may be examined in order to pinpoint the nature of the cause of the undesired occurrence.

11.3.1.1 Continuous Monitoring

It is essential to monitor these constituents which will result in immediate direct or indirect ill effects on the subsequent combined treatment facilities. The decision for continuous monitoring must also be based on monitoring those parameters which can be reliably measured under continuous conditions. Specific examples of continuous monitoring applications are discussed below.

Since flow equalization may be desirable for dampening hydraulic and organic fluctuations in wastestreams, some form of organic measurement may be required *in order to store a temporary excessive* slug of organic materials. Hydraulic variations can be controlled by a variable level equalization facility. Organic monitors, such as for organic carbon, are placed ahead of the treatment facility to bypass materials to a holding basin when the concentration exceeds a pre-set amount. The storage basin contents may then be fed back into the equalization basin at a rate and time that will not excessively overload the treatment components or exceed permissable discharge limitations.

Neutralization facilities can be continuously monitored by pH instrumentation. The same techniques can be used for equalization of large spills of acidic and alkaline materials. Since pH measurement is relatively easy and reliable, it also furnishes the best method for monitoring the effectiveness of heavy metal pretreatment facilities. These facilities are generally dependent on proper pH control and therefore, pH measurement will indicate upsets and may sound alarm devices. Oxidation-Reduction Potential instruments may also be desired for controlling heavy metal pretreatment facilities.

Although devices are commercially offered for monitoring oil concentrations, success will vary drastically with the condition of the wastestream. TOC is being used to noncontinuously monitor emulsified oil in many wastes. It must be remembered that the instrument measures all organic carbon, however, and changes in other organics will also be detected.

Pretreatment of suspended solids by sedimentation will not generally require sophisticated monitoring equipment. Generally, the escape of suspended solids to the combined treatment facility will not result in acute or immediate operating problems at the facility, but will increase sludge handling costs. Therefore, continuous monitoring is not required for sedimentation facilities unless toxic or inhibitory materials are being taken out by settling in the pretreatment process. If this is the case, then it would be best to monitor the factor which would cause an upset in the sedimentation facility, such as hydraulic flow. A device to measure and regulate flow to a temporary bypass as a means of leveling out hydraulic surges which are in

excess of a desired flow could be installed. If the suspended solids are organic in nature, an organic carbon instrument may be the best method of control.

11.3.1.2 Composite Sampling

Discharges having constituents or parameters which will not cause an immediate upset or will not generate significant operational problems in the combined facility can be composited on a routine basis for analysis. Generally, these parameters simply establish if an industry is in compliance with the contractural permit with the city and establish a basis for the monthly surcharge. Parameters which fall in this category are generally BOD, flow, suspended solids, nitrogen, and phosphorus, etc.

11.3.2 Monitoring at the Municipal Plant

The major reasons for monitoring at the municipal plant include a last chance to detect deleterious materials before they can cause harm or upset to the subsequent treatment facilities. Additionally, it is desirable to maintain a record of certain constituents so that if problems develop at the treatment facility, these records can be reviewed to attempt to determine the input to the treatment plant which may have caused the upset condition.

Continuous monitoring of total carbon (total organic carbon) will indicate and forewarn of any shock which may overload the biological aeration system at the combined facility. Similar to equalization techniques with pretreatment facilities, these extreme shocks can be diverted to a holding basin for temporary storage with controlled discharge back into the combined facility. However, it is more favorable to detect and store the high concentrations at the industrial source where the volume is much smaller. An alarm system may be installed to expedite the informing of plant operators of the shock condition. The measurement of pH is continuous and can also be equipped with an alarm system if a potential problem is anticipated. If significant quantities of oil and grease are expected, it is possible to detect these concentrations using an organic carbon monitor if no other significant organic materials are present to result in a false alarm.

If an organic carbon monitor is used to indicate variations in oil and grease input to the system, it should be located in a position where the stream is mixed so that the oil and grease will not be separated from the carrier wastestream and evade the monitoring system. Specific ion electrodes can be utilized to continuously monitor certain constituents such as cyanide, heavy metals, etc., which may cause resulting problems in the combined facility. It would be better, however, to install these detection devices at the industrial point of discharge with an alarm system both at the industry and the municipal treatment plant to forewarn of a problem before it reaches the combined facility.

There are several locations within the treatment plant where monitoring devices can be employed to improve operation of a treatment facility if a slug of certain materials enters the plant. For example, dissolved oxygen analyzers or probes may be utilized within the aeration basin of an activated sludge plant to indicate the need for additional aeration. When a sludge of degradable organic material enters the aeration basin, thereby, resulting in an increased oxygen use, the oxygen probes relate the decreased DO to a control system which will increase the speed of either surface aerators, or compressors if diffused air is used. The system can be set to operate at an aeration basin dissolved oxygen level of 0.5 - 1.0 mg/1, so that when the organic load has passed through the system, the aeration capacity is once again put back into normal operation, reducing overall operational horsepower costs.

If significant discharges of organic materials are expected from industrial streams, the nutrient content of the municipal wastes may be inadequate for biological activity. Therefore, nitrogen and phosphorus addition can be programmed on the basis of total carbon measurement of the influent wastestream to ensure adequate amounts of these nutrients.

Excessive hydraulic surges generally occur from mass discharges of cooling water into the system. However, these are generally consistent with industry and should not be expected to vary at the combined facility due to industrial discharge only. The hydraulic surges would generally only effect the hydraulic processes in the system such as gravity clarification facilities.

11.4 References

1. City of Akron Department of Public Service, Bureau of Public Utilities, *Water Pollution Control Station,* Feb., 1971.

2. Eckenfelder, W. W., and C. E. Adams, "Design and Economics of Joint Wastewater Treatment", *Journal of the Sanitary Engineering Division,* Proc. of the ASCE, 98:153, 1972.

11.5 Additional Reading

1. *Combined Treatment of Sewage and Industrial Wastes,* Economic Commission for Europe Committee on Water Problems, ST/SCE/Water/9, Jan., 1972.

2. Lund, H. F., *Industrial Pollution Control Handbook,* McGraw-Hill, 1971.

3. *Operation of Wastewater Treatment Plants,* WPCF Manual of Practice No. 11, 1970.

4. Sanders, F. A., Decision Factors - "Separate Industry on Joint Municipal Waste Treatment", *Proc. 23rd Industrial Waste Conference,* Purdue University, p. 1021, 1968.

5. "Technical Aspects of Joint Waste Treatment Municipal/Industrial", *Proc. of an Institute Held at Framingham, Mass.,* Publication of the Technical Guidance Center for Industrial Water Pollution Control, University of Massachusetts, 1969.

6. *Regulation of Sewer Use,* WPCF Publication, Manual of Practice, Washington, D. C. 20016, 3900 Wisconsin Avenue, 1963.

7. *Sewer Maintenance,* Manual of Practice, WPCF Publication, Washington, D. C., 1966.

8. Nemerow, N. L., *Theories and Practices of Industrial Waste Treatment,* Addison, Wesley Publishing Company, Inc., 1963.

9. Imbelli, C., et al., "The Industrial Waste Control Program in New York City", JWPCF, 40:1961, 1968.

Chapter 12
TRAINING OF TECHNICIANS

12.1 Introduction

Personnel assigned to the waste-monitoring program to sample and perform the analyses of the wastes should become familiar with the design criteria of their treatment facility. To ensure that the plant survey and the treatment facilities proceed with maximum efficiency, plant management should initiate a training program for the technicians.

12.2 Survey Technicians

Technicians who will be instrumental in developing the plant survey should be chosen on the basis of their interest and technical understanding. Changing circumstances and unpredicted situations will occur often requiring the technician to use his own judgment. In order to enable the technician to make reasonable decisions, he must develop a basic knowledge about the wastewater survey and the tools available to meet the objectives of the monitoring system. The following points should be considered in initiating a training program for survey technicians.

1. Principles of Flow Measurement - The relationship that exists between the flow and height of the water level, or a weir or pressure difference in a flow-metering device in pipes, the locations in a stream where measurements must be taken to obtain accurate flow measurements should be explained in detail.

2. Sample Collection and Handling - Detailed instructions should be given on the sampling method, including both manual and automatic samplers, with explanation of the method of storage from time of collection until actual analyses are performed. Particular emphasis should be placed on cleanliness of sample containers stressing the deterioration of sample quality, should bacteria be present. A preventive maintenance program regarding sample contamination should be initiated and adhered to throughout the entire monitoring program.

3. Maintenance of Monitoring Apparatus - Satisfactory performance of monitoring equipment requires routine cleaning and calibration, and a program should be initiated to familiarize the operating technicians with the proper procedures for operation and cleaning of the apparatus.

12.3 Laboratory Technicians

A manual of standard procedures for each analysis should be maintained and laboratory personnel given specific instruction in new and existing types of analyses. Using actual wastewater samples for demonstration purposes is the most effective illustration. Special emphasis should be on the BOD test which requires thorough preparation and understanding of all the potential hazards and misinterpretations inherent in this test.

12.4 Operating Technicians

To ensure that the requirements of established regulations, which govern monitoring and treatment equipment, are met, a training period should be provided for technicians and operators. The following subject matter should be included in a course of instruction for operating technicians.

1. Introduction - The purpose of the course and the regulations governing the quality of the wastewater should be covered.

2. Process Theory - Basic principles of the operation and control of the treatment facilities, guidelines for interpreting the results of the monitoring process, and anticipated difficulties should be discussed.

3. Equipment Familiarization and Operation - A training program for technicians should include operation of the equipment and dry runs on maintenance before the equipment is placed into operation. Technicians should be taught the nomenclature of the different pieces of the equipment, and a slide presentation on the apparatus is also helpful. It would be useful if the appropriate personnel could assist or at least observe the installation of the major pieces of equipment with which they will be involved.

4. Testing Procedures - It is important that each technician be cognizant of the performance of the monitoring program and how to detect malfunction. A conference should be held with all laboratory personnel to explain the sampling schedule, method of monitoring and expected results of the facilities. The frequency of sampling, the volumes required, and the type of sample, whether grab or composite, should be discussed. The technicians should be taught the use of prepared kits in cases where malfunctions may be expected. The laboratory should send a copy of all test results to the operator of the monitoring facilities. Periodic meetings should be held to discuss the status of the monitoring program and interpretation of the results.

5. Maintenance - Instruction concerning operating maintenance is helpful to indicate the weak points in the system, especially where erosion, corrosion, or plugging are to be expected. Manuals provided by the manufacturers should be discussed and made available to pertinent operating personnel. A manufacturer's representative can explain the use and operation of the particular equipment involved.

12.5 Safety

A comprehensive study should be performed to determine existing and possible future hazards. A safety manual should be compiled providing precautionary measures to be taken. Appropriate markings to identify locations of oil or chemical spillage should be made. Dangers associated with the chemicals involved with process control should be explained and the location of remedial facilities clearly marked. Neutralizing agents to alleviate the consequences of the chemicals should be readily available and located near the dangerous chemicals. A short course in first aid should be required of all technicians. All personnel coming in contact with hazardous chemicals or working in dangerous areas should be required to wear protective clothing where warranted.

12.6 Additional Reading

1. *Operator Training Courses,* Water Pollution Control Federation, 3900 Wisconsin Ave., Washington, D. C.

2. *Educational Systems for Operators of Water Pollution Control Facilities,* Proceedings of Conference, November, 1969, U. S. Department of the Interior, FWPCA.

3. Lund, H. F., *Industrial Pollution Control Handbook,* McGraw-Hill Book Company, 1971.

Chapter 13
SAFETY

13.1 General Safety Considerations

One important aspect of the monitoring program, especially in the initial surveys, is the protection of the people collecting the samples. All established plant safety regulations should be followed, of course, but it is also important to consider some problems specifically related to dealing with waste flows.

Sample-gauging points are sometimes established in manholes or other potentially dangerous locations. In the absence of proof acquired by repeated testing of the air in such locations for explosive or dangerous gases, a hazard should be assumed to exist. The types and nature of toxic materials which could be produced in the manufacturing process or as a result of the mixing of wastes from different areas should be established. These hazards may exist in the form of poisonous gases, such as hydrogen sulfide, chlorine, carbon monoxide, or hydrogen cyanide, or in explosive gases such as methane or gasoline vapor. In addition, there is the possibility that the atmosphere might not contain enough oxygen to support life. Physiologically inert and non-explosive gases, such as nitrogen and carbon dioxide, may readily produce a deadly atmosphere in a manhole or other poorly ventilated structure by diluting the oxygen to a level that will not support life. Obviously, a conventional gas mask is of no value in such a situation. Self-contained breathing apparatus would be acceptable, but in general a hose mask which is suited for unlimited time of use against any poisonous gas or oxygen-deficient atmosphere is the best type of equipment. In some instances, it will be possible to produce a safe atmosphere by providing artificial ventilation by means of portable blowers or air compressors. A safety harness, rope, and explosion-proof light in addition to gas-protective equipment are essential when entering unventilated structures. A two-man team is required under such conditions.

The danger of contact with liquid wastes should be recognized and safety procedures established.

Obviously, in planning a monitoring system, every effort should be made to sample points which do not require personnel to risk harming their health. In addition to the dangers involved in sampling, personnel should also be aware of the safety measures recommended for treatment facilities and plant sewage pumping stations and call attention to the management of any unsafe conditions. As a guide, the following check list may be of value in establishing a safety program.

1. Avoid crowded underground structures for pumping equipment. Use of superstructure stations is highly desirable.

2. Use stairs for access to pump rooms in preference to vertical ladders. Where space is critical, a spiral stairway is used, but even a ship's ladder is preferable to a vertical ladder. When vertical ladders cannot be avoided and their depth exceeds 10 ft, they should be equipped with a hoop cage or offset landings.

3. Specify guards for all exposed moving parts of pumps and equipment.

4. Use dead-front and dead-rear switchboards and provide non-conductive rubber mats in front of them.

5. Specify explosion-proof wiring, lighting switches, and other electrical equipment in all locations where potentially explosive atmospheres of flammable gas or vapor with air may accumulate. Specify moisture-proof equipment where difficulties from dampness may exist, but where there is no possibility of flammable gas accumulation. The basic standard of practice is the National Electrical Code.

6. Specify that all electrical wiring be properly insulated and grounded. No exposed wiring should be permitted. A voltage of not over 110 v for control circuits is desirable.

7. Provide ample natural or artificial lighting throughout the structure, especially in the wet and dry wells. Good illumination is aided by specifying light-colored paints for walls and ceilings.

8. Provide hoists and rails for removal of heavy equipment, such as screenings, cans, or pumps requiring repair.

9. Furnish a water supply under sufficient pressure for hosing wet wells and dry wells.

10. Prohibit all cross connections between a potable water supply and the sewage pumping equipment.

11. Assure adequate ventilation in wet wells or dry wells by natural or mechanical means. In deep wet or dry wells, mechanical ventilation is best accomplished by providing an air inlet near the ceiling and an exhaust duct, connected to an exhaust fan, located just above the maximum sewage level in wet wells or near the floor of dry wells. The fan capacity should be sufficient to effect a complete change of air in 2 to 5 min, depending on the manner of operation. In some instances, ventilation in wet wells has been accomplished by drawing air in and exhausting the wet well atmosphere through the sewer inlet to the wet well. Combustible gas indicators and alarms are sometimes desirable in large wet wells serving industrial areas.

12. Segregate wet wells completely from dry wells and afford entrance from the outside atmosphere only.

13. Judiciously post warning signs and use red paint for inherent hazards such as steep stairs or projecting objects (for example, valve wheels or ceiling space heaters). The provision of sufficient headroom is needed to avoid head injuries.

14. Stand-by gasoline engines should be fueled by means of a fuel pump, or a shutoff valve should be provided for small elevated gasoline storage tanks mounted on the engine to prevent the continuous discharge of gasoline through a defective carburetor. Large elevated gasoline storage tanks located inside structures should not be used.

15. Mount carbon dioxide fire extinguishers conveniently near the sewage pump motors and switchboard rooms.

16. The CHEMTREC telephone number (800-424-9300) for help in responding to chemical spills should be posted.

A check list of safety features for the sewage treatment plant follows:

1. The comments regarding moving machinery guards, electrical equipment, lighting, ladders, cross connections, suitable water supply for hosing, and signs, listed previously for plant sewage pumping facilities, apply to the treatment plant proper.

2. Fencing or guard rails should be specified for open tanks, hatchways, and other locations where needed.

3. Explosion-proof electrical equipment should be specified for enclosed screening or degritting chambers, in sludge-digestion tank galleries containing digested sludge piping or gas piping, and in any other hazardous location where gas or digested-sludge leakage is possible. Heating devices with open flame should be located in separate rooms with outside entrances, preferably at grade.

4. A potable water supply should be furnished for washing and drinking.

5. Dressing room facilities, including showers and lockers, and a lunch room, are highly desirable for all except the smallest plants. A supply of potable hot water should be provided in all plants.

6. Positive mechanical ventilation should be ample in grit and screening chambers; in sludge-pumping rooms, especially those located below grade; in chlorine storage rooms; and in digester or gas-piping structures. Separate rooms with outside entrances only are highly desirable for chlorine storage rooms and chlorinator rooms. Mechanical exhaust ducts for chlorine storage and chlorination rooms should extend from near the bottom of the floor.

7. Valves or operating devices for sludge pipes should be readily accessible to avoid physical injuries and to encourage their proper use so that sludge spillage may be avoided.

8. Crowding of equipment should be avoided around screens, sludge pumps, and vacuum filters.

9. Segregation of sludge-digestion tanks from the rest of the plant and provision of liquid-level indicators or alarms are desirable.

10. The following safety equipment for the plant should be included in the specifications:

    a. Safety harness.

    b. First-aid kit.

    c. Fire extinguishers (carbon dioxide and soda ash-acid types of extinguishers will meet most requirements).

    d. A portable combustible gas indicator where sludge gas is collected.

    e. An oxygen deficiency indicator.

    f. Hydrogen sulfide and carbon monoxide field kit indicators.

    g. A portable air blower.

    h. A hose mask or compressed-air, demand-type mask.

    i. Two or more canister gas masks or compressed-air masks for chlorine leaks.

    j. Miner's safety-cap lights.

13.2 Additional Reading

1. *Accident Prevention Manual for Industrial Operations,* National Safety Council, Chicago, Ill.

2. National Electrical Code, National Fire Protection Association, Boston, Mass., Vol V, 1956.

3. Safety in Waste Water Works, *Manual of Practice No. 1,* W.P.C.F., Washington, D. C., 1959.

4. Sewage Treatment Plant Design, W.P.C.F. *Manual of Practice No. 8,* (A.S.C.E. Manual of Engineering Practice No. 36), 1967.

Chapter 14
GLOSSARY

ACIDITY - The quantitative capacity of aqueous solutions to react with hydroxyl ions. It is measured by titration with a standard solution of a base to a specified end point. Usually expressed as milligrams per liter of calcium carbonate.

AERATED POND - A natural or artificial wastewater treatment pond in which mechanical or diffused-air aeration is used to supplement the oxygen supply.

ALKALINITY - The capacity of water to neutralize acids, a property imparted by the water's content of carbonates, bicarbonates, hydroxides, and occasionally borates, silicates, and phosphates. It is expressed in milligrams per liter of equivalent calcium carbonate.

ANAEROBIC WASTE TREATMENT - Waste stabilization brought about through the action of microorganisms in the absence of air or elemental oxygen. Usually refers to waste treatment by methane fermentation.

ANIONIC SURFACTANT - An ionic type of surface-active substance that has been widely used in cleaning products. The hydrophilic group of these surfactants carries a negative charge in washing solution.

ASSIMILATIVE CAPACITY - The capacity of a natural body of water to receive: (a) wastewaters, without deleterious effects; (b) toxic materials, without damage to aquatic life or humans who consume the water; (c) BOD, within prescribed dissolved oxygen limits.

BACTERIAL EXAMINATION - The examination of water and wastewater to determine the presence, number, and identification of bacteria. Also called bacterial analysis.

BAFFLES - Deflector vanes, guides, grids, gratings, or similar devices constructed or placed in flowing water, wastewater, or slurry systems to check or effect a more uniform distribution of velocites; absorb energy; divert, guide, or agitate the liquids; and check eddies.

BIOASSAY - (1) An assay method using a change in biological activity as a qualitative or quantitative means of analyzing a material's response to industrial wastes and other wastewaters by using viable organisms or live fish as test organisms.

BIOCHEMICAL OXYGEN DEMAND (BOD) - (1) The quantity of oxygen used in the biochemical oxidation of organic matter in a specified time, at a specified temperature, and under specified conditions. (2) A standard test used in assessing wastewater strength.

BIOLOGICAL WASTEWATER TREATMENT - Forms of wastewater treatment in which bacterial or biochemical action is intensified to stabilize, oxidize, and nitrify the unstable organic matter present. Intermittent sand filters, contact beds, trickling filters, and activated sludge processes are examples.

BROAD-CRESTED WEIR - A weir having a substantial width of crest in the direction parallel to the direction of flow of water over it. This type of weir supports the nappe for an appreciable length and produces no bottom contraction of the nappe. Also called widecrested weir.

BUFFER - Any of certain combinations of chemicals used to stabilize the pH values or alkalinities of solutions.

CALIBRATION - The determination, checking, or rectifying of the graduation of any instrument giving quantitative measurements.

CATIONIC SURFACTANT - A surfactant in which the hydrophilic group is positively charged; usually a quaternary ammonium salt such as cetyl trimethyl ammonium bromide (CeTAB), $C_{16}H_{33}N + (CH_3)_3$ Br^-Cationic surfactants as a class are poor cleaners, but exhibit remarkable disinfectant properties.

CHEMICAL COAGULATION - The destabilization and initial aggregation of colloidal and finely divided suspended matter by the addition of a floc-forming chemical.

CHEMICAL OXYGEN DEMAND (COD) - A measure of the oxygen -consuming capacity of inorganic and organic matter present in water or wastewater. It is expressed as the amount of oxygen consumed from a chemical oxidant in a specific test. It does not differentiate between stable and unstable organic matter and thus does not necessarily correlate with biochemical oxygen demand.

CHEMICAL PRECIPITATION - (1) Precipitation induced by addition of chemicals. (2) The process of softening water by the addition of lime or lime and soda ash as the precipitants.

CHLORINATION - The application of chlorine to water or wastewater, generally for the purpose of disinfection, but frequently for accomplishing other biological or chemical results.

CIPOLLETTI WEIR - A contracted weir of trapezoidal shape, in which the sides of the notch are given a slope of one horizontal to four vertical to compensate as much as possible for the effect of end contractions.

CLARIFICATION - Any process or combination of processes, the primary purpose of which is to reduce the concentration of suspended matter in a liquid.

COAGULATION - In water and wastewater treatment, the destabilization and initial aggregation of colloidal and finely divided suspended matter by the addition of a floc-forming chemical or by biological processes.

COLLOIDAL MATTER - Finely divided solids which will not settle but may be removed by coagulation or biochemical action or membrane filtration.

COMMINUTION - The process of cutting and screening solids contained in wastewater flow before it enters the flow pumps or other units in the treatment plant.

COMPOSITE WASTEWATER SAMPLE - A combination of individual samples of water or wastewater taken at selected intervals, generally hourly for some specified period, to minimize the effect of the variability of the individual sample. Individual samples may have equal volume or may be roughly proportioned to the flow at time of sampling.

CONDUCTANCE - A measure of the conducting power of a solution equal to the reciprocal of the resistance. The resistance is expressed in ohms.

CONTRACTED WEIR - A rectangular notched weir with a crest width narrower than the channel across which it is installed and with vertical sides, extending above the upstream water level, which produce a contraction in the stream of water as it leaves the notch.

CONTRACTION - (1) The extent to which the cross-sectional area of a jet, nappe, or stream is decreased after passing an orifice, weir, or notch. (2) The reduction in cross-sectional area of a conduit along its longitudinal axis.

CONTROL SECTION - The cross section in a waterway which is the bottleneck for a given flow and which determines the energy head required to produce the flow.

CREST - The top of a dam, dike, spillway, or weir, to which water must rise before passing over the structure.

CRITICAL DEPTH - The depth of water flowing in an open channel or partially filled conduit corresponding to one of the recognized critical velocities.

CURRENT METER - A device for determining the velocity of moving water.

DATA - Records of observations and measurements of physical facts, occurrences, and conditions, reduced to written, graphical, or tabular form.

DIALYSIS - The separation of a colloid from a substance in true solution by allowing the solution to diffuse through a semi-permeable membrane.

DIFFERENTIAL GAUGE - A pressure gauge used to measure the difference in pressure between two points in a pipe or receptacle containing a liquid.

DISSOLVED SOLIDS - Theoretically, the anhydrous residues of the dissolved constituents in water. Actually, the term is defined by the method used in determination. In water and wastewater treatment the Standard Methods tests are used.

ELECTRICAL CONDUCTIVITY - The reciprocal of the resistance in ohms measured between opposite faces of a centimeter cube of an aqueous solution at a specified temperature. It is expressed as microohms per centimeter at temperature degrees Celsius.

END CONTRACTION - (1) The extent of the reduction in the width of the nappe due to a constriction caused by the ends of the weir notch. (2) The walls of a weir notch which does not extend across the entire width of the channel of approach.

ENERGY HEAD - The height of the hydraulic grade line above the center line of a conduit plus the velocity head of the mean velocity of the water in that section.

FATS (WASTES) - Triglyceride esters of fatty acids. Erroneously used as synonomous with grease.

FLOAT GAUGE - A device for measuring the elevation of the surface of a liquid, the actuating element of which is a buoyant float that rests on the surface of the liquid and rises or falls with it. The elevation of the surface is measured by a chain or tape attached to the float.

FLOCCULATION - In water and wastewater treatment, the agglomeration of colloidal and finely divided suspended matter after coagulation by gentle stirring by either mechanical or hydraulic means. In biological wastewater treatment where coagulation is not used, agglomeration may be accomplished biologically.

FLOTATION - The rising of suspended matter to the surface of the liquid in a tank as scum by aeration, the evolution of gas, chemicals, electrolysis, heat, or bacterial decomposition and the subsequent removal of the scum by skimming.

FLOW-NOZZLE METER - A water meter of the differential-medium type in which the flow through the primary element or nozzle produces a pressure difference or differential head, which the secondary element, or float tube, then uses as an indication of the rate of flow.

FREQUENCY DISTRIBUTION - An arrangement or distribution of quantities pertaining to a single element in order of their magnitude.

GAUGING STATION - A location on a stream or conduit where measurements of discharge are customarily made. The location includes a stretch of channel through which the flow is uniform and a control downstream from this stretch. The station usually has a recording or other gauge for measuring the elevation of the water surface in the channel or conduit.

GRAB SAMPLE - A single sample of wastewater taken at neither set time nor flow.

GREASE - In wastewater, a group of substances including fats, waxes, free fatty acids, calcium and magnesium soaps, mineral oils, and certain other nonfatty materials. The type of solvent and method used for extraction should be stated for quantification.

GREASE SKIMMER - A device for removing floating grease or scum from the surface of wastewater in a tank.

GRIT CHAMBER - A detention chamber or an enlargement of a sewer designed to reduce the velocity of flow of the liquid to permit the separation of mineral from organic solids by differential sedimentation.

HARDNESS - A characteristic of water, imparted by salts of calcium, magnesium, and iron such as bicarbonates, carbonates, sulfates, chlorides, and nitrates, that cause curdling of soap, deposition of scale in boilders, damage in some industrial processes, and sometimes objectionable taste. It may be determined by a standard laboratory procedure or computed from the amounts of calcium and magnesium as well as iron, aluminum, manganese, barium, strontium, and zinc, and is expressed as equivalent calcium carbonate.

HOOK GAUGE - A pointed, U-shaped hook attached to a graduated staff or vernier scale, used in the accurate measurement of the elevation of a water surface. The hook is submerged, and then raised, usually by means of a screw, until the point just makes a pimple on the water surface.

INDUSTRIAL WASTES - The liquid wastes from industrial processes, as distinct from domestic or sanitary wastes.

INORGANIC MATTER - Chemical substances of mineral origin, or more correctly, not of basically carbon structure.

LAGOON - (1) A shallow body of water, as a pond or lake, which usually has a shallow, restricted inlet from the sea. (2) A pond containing raw or partially treated wastewater in which aerobic or anaerobic stabilization occurs.

LIME - Any of a family of chemicals consisting essentially of calcium hydroxide made from limestone (calcite) which is composed almost wholly of calcium carbonate or a mixture of calcium and magnesium carbonates.

MANOMETER - An instrument for measuring pressure. It usually consists of a U-shaped tube containing a liquid, the surface of which in one end of the tube moves proportionally with changes in pressure on the liquid in the other end. Also, a tube type of differential pressure gauge.

MEAN VELOCITY - The average velocity of a stream flowing in a channel or conduit at a given cross section or in a given reach. It is equal to the discharge divided by the cross-sectional area of the reach. Also called average velocity.

METHYL-ORANGE ALKALINITY- A measure of the total alkalinity of an aqueous suspension or solution. It is measured by the quantity of sulfuric acid required to bring the water pH to a value of 4.3, as indicated by the change in color of methyl orange. It is expressed in milligrams $CaCO_3$ per liter.

MONITORING - (1) The procedure or operation of locating and measuring radioactive contamination by means of survey instruments that can detect and measure, as dose rate, ionizing radiations. (2) The measurement, sometimes continuous, of water quality.

MOST PROBABLE NUMBER (MPN) - That number of organisms per unit volume that, in accordance with statistical theory, would be more likely than any other number to yield the observed test result with the greatest frequency. Expressed as density of organisms per 100 ml. Results are computed from the number of positive findings of coliform-group organisms resulting from multiple-portion decimal-dilution plantings.

NAPPE - The sheet or curtain of water overflowing a weir or dam. When freely overflowing any given structure, it has a well-defined upper and lower surface.

NEUTRALIZATION - Reaction of acid or alkali with the opposite reagent until the concentrations of hydrogen and hydroxyl ions in the solution are approximately equal.

NITRIFICATION - The conversion of nitrogenous matter into nitrates by bacteria.

NONIONIC SURFACTANT - A general family of surfactants so called because in solution the entire molecule remains associated. Nonionic molecules orient themselves at surfaces not by an electrical charge, but through separate grease-solubilizing and water-soluble groups within the molecule.

NONSETTLEABLE MATTER - The suspended matter which does not settle nor float to the surface of water in a period of one hour.

NONSETTLEABLE SOLIDS - Wastewater matter that will stay in suspension for an extended period of time. Such period may be arbitrarily taken for testing purposes as one hour.

NOTCH - An opening in a dam, spillway, or measuring weir for the passage of water.

NOZZLE - (1) A short, cone-shaped tube used as an outlet for a hose or pipe. The velocity of the merging stream of water is increased by the reduction in cross-sectional area of the nozzle. (2) A short piece of pipe with a flange on one end and a saddle flange on the other end.

ODOR THRESHOLD - The point at which, after successive dilutions with odorless water, the odor of a water sample can just be detected. The threshold odor is expressed quantitatively by the number of times the sample is diluted with odorless water.

OPEN-CHANNEL FLOW - Flow of a fluid with its surface exposed to the atmosphere. The conduit may be an open channel or a closed conduit flowing partly full.

ORGANIC MATTER - Chemical substances of animal or vegetable origin, or more correctly, of basically carbon structure, comprising compounds consisting of hydrocarbons and their derivatives.

ORGANIC NITROGEN - Nitrogen combined in organic molecules such as protein, amines, and amino acids.

ORIFICE - (1) An opening with closed perimeter, ususally of regular form, in a plate, wall, or partition, through which water may flow, generally used for the purpose of measurement or control of such water. The edge may be sharp or of another configuration. (2) The end of a small tube such as a Pitot tube.

ORIFICE PLATE - A plate containing an orifice. In pipes, the plate is usually inserted between a pair of flanges, and the orifice is smaller in area than the cross section of the pipe.

ORTHOPHOSPHATE - An acid or salt containing phosphorous as PO_4.

OXIDATION - The addition of oxygen to a compound. More generally, any reaction which involves the loss of electrons from an atom.

OXIDATION POND - A basin used for retention of wastewater before final disposal, in which biological oxidation of organic material is effected by natural or artificially accelerated transfer of oxygen to the water from air.

OXIDATION-REDUCTION POTENTIAL (ORP) - The potential required to transfer electrons from the oxidant to the reductant and used as a qualitative measure of the state of oxidation in wastewater treatment systems.

PARSHALL FLUME - A calibrated device developed by Parshall for measuring the flow of liquid in an open conduit. It consists essentially of a contracting length, a throat, and an expanding length. At the throat is a sill over which the flow passes at critical depth. The upper and lower heads are each measured at a definite distance from the sill. The lower head need not be measured unless the sill is submerged more than about 67 percent.

PATHOGENIC BACTERIA - Bacteria which may cause disease in the host organisms by their parasitic growth.

pH - The reciprocal of the logarithm of the hydrogen ion concentration. The concentration is the weight of hydrogen ions, in grams per liter of solution. Neutral water, for example, has a pH value of 7 and hydrogen ion concentration of 10^{-7}.

PHENOLPHTHALEIN ALKALINITY - A measure of the hydroxides plus one half of the normal carbonates in aqueous suspension. Measured by the amount of sulfuric acid required to bring the water to a pH value of 8.3, as indicated by a change in color of phenolphthalein. It is expressed in parts per million of calcium carbonate.

PITOT TUBE - A device for measuring the velocity of flowing fluid by using the velocity head of the stream as an index velocity. It consists essentially of an orifice held to point upstream and connected with a tube in which the impact pressure due to velocity head may be observed and measured. It also may be constructed with an upstream and downstream orifice, or with an orifice pointing upstream to measure the velocity head or pressure and piezometer holes in a coaxial tube to measure the static head or pressure, in which case the difference in pressure is the index of velocity.

PRIMARY SETTLING TANK - The first settling tank for the removal of settleable solids through which wastewater is passed in a treatment works.

PRIMARY TREATMENT - (1) The first major (sometimes the only) treatment in a wastewater treatment works, usually sedimentation. (2) The removal of a substantial amount of suspended matter but little or no colloidal and dissolved matter.

PROBABILITY CURVE - A curve that expresses the cumulative frequency of occurrence of a given event, based on an extended record of past occurrences. The curve is usually plotted on specially prepared coordinate paper, with ordinates representing magnitude equal to, or less than, the event, and abscissas representing the probability, time, or other units of incidence.

RECORDER - A device that makes a graph or other automatic record of the stage, pressure, depth, velocity, or the movement or position of water controlling devices, usually as a function of time.

RECTANGULAR WEIR - A weir having a notch that is rectangular in shape.

RESIDUAL CHLORINE - Chlorine remaining in water or wastewater at the end of a specified contact period as combined or free chlorine.

SALINITY - (1) The relative concentration of salts, usually sodium chloride, in a given water. It is usually expressed in terms of the number of parts per million of chloride (Cl). (2) A measure of the concentration of dissolved mineral substances in water.

SAMPLER - A device used with or without flow measurement to obtain an aliquot portion of water or waste for analytical purposes. May be designed for taking a single sample (grab), composite sample, continuous sample, periodic sample.

SANITARY SEWER - A sewer that carries liquid and water-carried wastes from residences, commercial buildings, industrial plants, and institutions, together with minor quantities of ground-storm, and surface waters that are not admitted intentionally.

SCREEN - (1) A device with openings, generally of uniform size, used to retain or remove suspended or floating solids in flowing water or wastewater and to prevent them from entering an intake or passing a given point in a conduit. The screening element may consist of parallel bars, rods, wires, grating, wire mesh, or perforated plate, and the openings may be of any shape, although they are usually circular or rectangular. (2) A device used to segregate granular material such as sand, crushed rock, and soil into various sizes.

SECONDARY SETTLING TANK - A tank through which effluent from some prior treatment process flows for the purpose of removing settleable solids.

SECONDARY WASTEWATER TREATMENT - The treatment of wastewater by biological methods after primary treatment by sedimentation.

SECOND-STAGE BIOLOGICAL OXYGEN DEMAND - That part of the oxygen demand associated with the biochemical oxidation of nitrogenous material. As the term implies, the oxidation of the nitrogenous materials usually does not start until a portion of the carbonaceous material has been oxidized during the first stage.

SEDIMENTATION - The process of subsidence and deposition of suspended matter carried by water, wastewater, or other liquids, by gravity. It is usually accomplished by reducing the velocity of the liquid below the point at which it can transport the suspended material. Also called settling.

SELF-PURIFICATION - The natural processes occurring in a stream or other body of water that result in the reduction of bacteria, satisfaction of the BOD, stabilization of organic constituents, replacement of depleted dissolved oxygen, and the return of the stream biota to normal. Also called natural purification.

SEMIPERMEABLE MEMBRANE - A barrier, usually thin, that permits passage of particles up to a certain size or of special nature. Often used to separate colloids from their suspending liquid, as in dialysis.

SETTLEABLE SOLIDS - (1) That matter in wastewater which will not stay in suspension during a preselected settling period, such as one hour, but either settles to the bottom or floats to the top. (2) In the Imhoff cone test, the volume of matter that settles to the bottom of the cone in one hour.

SKIMMING TANK - A tank so designed that floating matter will rise and remain on the surface of the wastewater until removed, while the liquid discharges continuously under curtain walls or scum boards.

SLUDGE DIGESTION - The process by which organic or volatile matter in sludge is gasified, liquified, mineralized, or converted into more stable organic matter through the activities of either anaerobic or aerobic organisms.

SLUDGE THICKENING - The increase in solids concentration of sludge in a sedimentation or digestion tank.

STABILIZATION LAGOON - A shallow pond for storage of wastewater before discharge. Such lagoons may serve only to detain and equalize wastewater composition before regulated discharge to a stream, but often they are used for biological oxidation.

STABILIZATION POND - A type of oxidation pond in which biological oxidation of organic matter is effected by natural or artificially accelerated transfer of oxygen to the water from air.

STAFF GAUGE - A graduated scale, vertical unless otherwise specified, on a plank, metal plate, pier, wall, etc., used to indicate the height of a fluid surface above a specified point or datum plane.

STAGE-DISCHARGE RELATION - The relation between gauge height and discharge of a stream or conduit at a gauging station. This relation is shown by the rating curve or rating table for such stations.

STATIC HEAD - (1) The total head without reduction for velocity head or losses; for example, the difference in the elevation of headwater and tail water of a power plant. (2) The vertical distance between the free level of the source of supply and the point of free discharge or the level of the free surface.

STEADY FLOW - (1) A flow in which the rate or quantity of water passing a given point per unit of time remains constant. (2) Flow in which the velocity vector does not change in either magnitude or direction with respect to time at any point or section.

STEADY UNIFORM FLOW - A flow in which the velocity and the quantity of water flowing per unit remains constant.

STILLING WELL - A pipe, chamber, or compartment with comparatively small inlet or inlets communicating with a main body of water. Its purpose is to dampen waves or surges while permitting the water level within the well to rise and fall with the major fluctuations of the main body of water. It is used with water-measuring devices to improve accuracy of measurement.

SUBMERGED WEIR - A weir that, when in use, has the water level on the downstream side at an elevation equal to, or higher than, the weir crest. The rate of discharge is affected by the tail water. Also called drowned weir.

SUPPRESSED WEIR - A weir with one or both sides flush with the channel of approach. This prevents contraction of the nappe adjacent to the flush side. The suppression may occur on one end or both ends.

SUSPENDED MATTER - (1) Solids in suspension in water, wastewater, or effluent. (2) Solids in suspension that can be removed readily by standard filtering procedures in a laboratory.

SUSPENDED SOLIDS - (1) Solids that either float on the surface of, or are in suspension in water, wastewater, or other liquids, and which are largely removable by laboratory filtering. (2) The quantity of material removed from wastewater in a laboratory test, as prescribed in "Standard Methods for the Examination of Water and Wastewater" and referred to as nonfilterable residue.

THRESHOLD ODOR - The minimum odor of the water sample that can just be detected after successive dilutions with odorless water. Also called odor threshold.

TITRATION - The determination of a constituent in a known volume of solution by the measured addition of a solution of known strength to completion of the reaction as signaled by observation of an end point.

TOTAL SOLIDS - The sum of dissolved and undissolved constituents in water or wastewater, usually stated in milligrams per liter.

TRACER - (1) A foreign substance mixed with or attached to a given substance for the determination of the location or distribution of the substance. (2) An element or compound that has been made radioactive so that it can be easily followed (traced) in biological and industrial processes. Radiation emitted by the radioisotope pinpoints its location.

TURBIDIMETER - An instrument for measurement of turbidity, in which a standard suspension usually is used for reference.

TURBIDITY - (1) A condition in water or wastewater caused by the presence of suspended matter, resulting in the scattering and absorption of light rays. (2) A measure of fine suspended matter in liquids. (3) An analytical quantity usually reported in arbitrary turbidity units determined by measurements of light diffraction.

TURBULENT FLOW - (1) The flow of a liquid past an object such that the velocity at any fixed point in the fluid varies irregularly. (2) A type of fluid flow in which there is an unsteady motion of the particles and the motion at a fixed point varies in no definite manner. Sometimes called eddy flow, sinuous flow.

ULTIMATE BIOCHEMICAL OXYGEN DEMAND - (1) Commonly, the total quantity of oxygen required to satisfy completely the first-stage biochemical oxygen demand. (2) More strictly, the quantity of oxygen required to satisfy completely both the first-stage and the second-stage biochemical oxygen demands.

VELOCITY-AREA METHOD - A method used to determine the discharge of a stream or any open channel by measuring the velocity of the flowing water at several points within the cross section of the stream and summing up the products of these velocities and their respective fraction of the total area.

VELOCITY METER - A water meter that operates on the principle that the vanes of the wheel move at approximately the same velocity as the flowing water.

VELOCITY OF APPROACH - The mean velocity in a conduit immediately upstream from a weir, dam, venturi tube, or other structure.

VENA CONTRACTA - The most contracted sectional area of a stream, jet, or nappe issuing through or over an orifice or weir notch. It occurs downstream from the plane of such notch or orifice.

VENTURI FLUME - An open flume with a contracted throat that causes a drop in the hydraulic grade line. It is used for measuring flow.

VENTURI METER - A differential meter for measuring flow of water or other fluid through closed conduits or pipes, consisting of a venturi tube and one of several proprietary forms of flow-registering devices. The difference in velocity heads between the entrance and the contracted throat is an indication of the rate of flow.

VENTURI TUBE - A closed conduit or pipe, used to measure the rate of flow of fluids, containing a gradual contraction to a throat, which causes a pressure-head reduction by which the velocity may be determined. The contraction is usually, but not necessarily, followed by an enlargement to the original size.

VOLATILE SOLIDS - The quantity of solids in water, wastewater, or other liquids, lost on ignition of the dry solids at 600° C.

WASTEWATER SURVEY - An investigation of the quality and characteristics of each waste stream, as in an industrial plant or municipality.

WATER-LEVEL RECORDER - A device for producing, graphically or otherwise, a record of the rise and fall of a water surface with respect to time.

WATER METER - A device installed in a pipe under pressure for measuring and registering the quantity of water passing through it.

WEIR - (1) A diversion dam. (2) A device that has a crest and some side containment of known geometric shape, such as a V, trapezoid, or rectangle, and is used to measure flow of liquid. The liquid surface is exposed to the atmosphere. Flow is related to upstream height of water above the crest, to position of crest with respect to downstream water surface, and to geometry of the weir opening.

14.1 References

1. Glossary: *Water and Wastewater Control Engineering,* Prepared by Joint Editorial Board Representing APHA, ASCE, AWWA and WPCF, 1969.

CHAPTER 15

CONVERSION TABLES

VOLUME AND CAPACITY EQUIVALENTS

Cubic Inches	Cubic Feet	Cubic Yards	Liters	Quarts Liquid	Gallons U.S. Liq.	Gallons Imperial	Pounds of Water @ 4° C
1	0.0005787	0.00002143	0.0167387	0.01732	0.004329	0.003605	0.03613
1,728	1	0.03704	28.32	29.92	7.481	6.229	62.43
46,656	27	1	764.6	807.90	201.97	168.17	1,685.5
61.024	0.035315	0.001308	1	1.057	0.2642	0.220	2.205
57.75	0.03342	0.001238	0.9463	1	0.25	0.2082	2.086
231	0.13368	0.004951	3.785	4	1	0.8327	8.345
277.4	0.16054	0.005946	4.546	4.804	1.201	1	10.022
27.68	0.01602	0.0005933	0.4536	0.4793	0.1198	0.09978	1

FLOW EQUIVALENTS

Gallons per Minute	Thousand Gallons per Hour	Million Gallons per Day	Cubic Feet per Second	Liters per Second
1	0.060	0.001440	0.002228	0.06309
16.67	1	0.024	0.03713	1.052
694.4	41.67	1	1.547	43.81
448.8	26.93	0.6463	1	28.32
15.85	0.951	0.02282	0.03532	1

PRESSURE EQUIVALENTS

Pounds Per Square Inch	Atmospheres	Column of Hg @ 32° F Inches	Columns of Water @ 4° C		
			Inches	Feet	Meters
1	0.06805	2.036	27.68	2.307	0.7031
14.696	1	29.92	406.8	33.90	10.33
0.4912	0.03342	1	13.60	1.133	0.3453
0.03613	0.002458	0.07355	1	0.08333	0.0254
0.4335	0.02950	0.8826	12	1	0.3048
1.422	0.09677	2.896	39.37	3.281	1

MASS EQUIVALENTS

Grams	Ounces Avdp.	Pounds Avdp.	Kilograms	Tons (Short)
1	0.035274	0.0022046	0.0010	0.000001102
28.35	1	0.06250	0.02835	0.00003125
453.6	16	1	0.4536	0.00050
1,000	35.27	2.2046	1	0.001102
907,190	32,000	2,000	907.2	1

LENGTH EQUIVALENTS

Centimeters	Inches	Feet	Meters	Miles Statute
1	0.3937	0.03281	0.010	0.000006214
2.540	1	0.08333	0.02540	0.00001578
30.480	12	1	0.3048	0.0001894
100	39.37	3.281	1	0.0006214
160,930	63,360	5,280	1,609.3	1

AREA EQUIVALENTS

Square Miles Statute	Acres	Square Feet	Square Inches	Square Meters
1	640	27,878,000	–	2,590,000
0.001562	1	43,560	6,273,00	4,047.0
–	0.00002296	1	144	0.09290
–	–	0.006944	1	0.0006452
–	0.0002471	10.76	1,550.0	1

TIME EQUIVALENTS

Days	Hours	Minutes	Seconds
1	24	1,440	86,400
0.04167	1	60	3,600
0.0006944	0.01667	1	60
0.00001157	0.0002777	0.01667	1

Temperature Conversion Formulas

Degrees Celsius–C (formerly Centigrade)	Degrees Fahrenheit–F	Degrees Réaumur–R
C + 273.15 = K Kelvin	F + 459.67 = Rankine	R x 5/4 = C Celsius
(C x 9/5) + 32 = F Fahrenheit	(F – 32) x 5/9 = C Celsius	(R x 9/4) + 32 = F Fahrenheit
C x 4/5 = R Réaumur	(F – 32) x 4/9 = R Réaumur	

°C	–40	–17.8	0	5	10	15	20	25	30	35	40	45	50	55	60	
°F	–40	0	32	41	50	59	68	77	86	95	104	113	122	131	140	

MISCELLANEOUS EQUIVALENTS

1 part per million = 1 mg per liter = 8.34 lbs per million gal
1 grain per gallon = 17.12 part per million = 142.8 lbs per million gal

$$\text{part per million by weight} = \frac{\text{mg/l}}{\text{Sp Gr}}$$

1 grain = 1,000 mg
1 mgd = 5570 cu ft per hr
1 mgd per acre ft = 0.430 gpm per cubic yd
1 sq-mile-in. = 17.38 million gal
1 in. per hr = 1.01 cfs per acre
1 gram per capita = 2.2 lbs per 1000 population
Settling Tank
1 cm per sec = 21,205 gpd per sq ft
1 cm per sec = 8.47×10^{-3} hr detention per ft of depth
1 acre-ft = 1,613 cu yd = 43, 560 cu ft