United States
Environmental Protection
Agency

Environmental Monitoring Systems
Laboratory
Research Triangle Park NC 27711

Research and Development

EPA-600/4-82-042a & b March 1983

EPA

Quality Assurance Handbook for Air Pollution Measurement Systems:

Volume V. Manual for Precipitation Measurement Systems

Part I. Quality Assurance Manual

Part II. Operations and Maintenance Manual

Disclaimer

This report has been reviewed by the Environmental Monitoring Systems Laboratory, U.S. Environmental Protection Agency, and approved for publication. Approval does not signify that the contents necessarily reflect the views and policies of the U.S. Environmental Protection Agency, nor does mention of trade names or commercial products constitute endorsement or recommendation for use.

Foreword

Measurement and monitoring research efforts are designed to anticipate potential environmental problems, to support regulatory actions by developing an in-depth understanding of processes that impact health and the ecology, to provide innovative means of monitoring compliance with regulations, and to evaluate the effectiveness of health and environmental protection efforts through the monitoring of long-term trends. The Environmental Monitoring Systems Laboratory, Research Triangle Park, North Carolina, is responsible for development of environmental monitoring technology and systems; EPA-wide quality assurance programs for air pollution measurement systems; and technical support to state agencies and to EPA's Office of Air, Noise, and Radiation; Office of Pesticides and Toxic Substances; and Office of Solid Waste and Emergency Response.

This quality assurance manual has been developed to aid agencies, which plan to measure precipitation, develop adequate quality assurance programs. This manual covers both laboratory and field measurement systems currently used in precipitation monitoring Requirements of the EPA-wide quality assurance program have been incorporated into this manual. The main goal of the EPA quality assurance program is to provide documented environmental monitoring data of adequate precision and accuracy

Thomas R. Hauser, Director
Environmental Monitoring Systems Laboratory
Office of Research and Development

Abstract

The quality assurance manual for precipitation measurement systems was designed to assist agencies and personnel in obtaining high quality data in monitoring and analyzing precipitation samples. Since precipitation samples contain trace (micromolar) quantities of constituents, they are susceptable to appreciable error due to contamination as well as chemical and biological degradation Sections in this manual address requirements which should be incorporated into every quality assurance project plan. The manual presents guidelines for assessment of precipitation measurement data in terms of precision, accuracy, representativeness, completeness, and comparability. The topics covered are quality assurance objectives; organiation and planning; documentation; siting; field operations; laboratory operations; data handling, validation and reporting; and data quality assessment All or most of these guidelines and protocols should be adapted and used for any precipitation monitoring program.

Contents

Section	Pages	Date
1.0 Introduction	1	1/1/81
2.0 Quality Assurance Objectives	1	1/1/81
3.0 Planning and Organization	2	1/1/81
4.0 Documentation	1	1/1/81
5.0 Siting	8	1/1/81
6.0 Field Operations	28	1/1/81
7.0 Laboratory Operations	38	1/1/81
8.0 Data Handling, Validation, and Reporting	10	1/1/81
9.0 Data Quality Assessment	6	1/1/81
Appendix A Procedure Used for Hubaux and Vos Detection Limit Calculations	1	1/1/81
Appendix B Methods Validation Study for Pb Analysis by Flame Atomic Absorption	2	1/1/81

Acknowledgements

This quality assurance manual was prepared for the Environmental Monitoring Systems Laboratory, Research Triangle Park, North Carolina, under the direction of the project officer, John C. Puzak. Material in this manual has been based on current EPA quality assurance procedures, on air and water monitoring methods, and on procedures used in the Electric Power Research Institute (EPRI) Acid Precipitation Study, the National Atmospheric Deposition Program (NADP), and the Multi-State Atmospheric Power Production Pollution Study (MAP3S). The authors extend grateful appreciation to the staff at Rockwell International's Environmental Monitoring & Services Center, Newbury Park, California, and to the many reviewers of the drafts of this document for their contributions.

1.0 Introduction

Wet deposition is one of the chief sinks for atmospheric pollutants; these pollutants include substances beneficial as well as harmful to the environment The harmful pollutants formed primarily during dissolution and removal of both gaseous and particulate nitrogen and sulfur oxides (NO_x and SO_x) in rain and snow produce acid precipitation with a pH less than 5.6—the equilibrium value due to atmospheric carbon dioxide (CO_2) alone.

Increasing awareness of the potentially harmful effects of acid precipitation on soil, forest, and lake ecologies as well as its corrosive effect on various materials have made it the subject of great scientific and social concern. One result of these concerns has been an increase in the number of programs for monitoring acid precipitation. Monitoring programs generally have one or more of the following objectives:

1. To obtain a data base of variables for evaluating acid precipitation trends in remote areas generally unaffected by pollutants.
2. To observe and to relate acid precipitation trends throughout a region, including urban and non-urban areas, to meteorological or seasonal conditions as well as to emissions.
3. To provide a data base for evaluating effects, for developing and evaluating abatement strategies, and for developing and validating models.

Because precipitation samples collected during the monitoring contain trace (micromolar) quantities of constituents, they are susceptible to appreciable error due to small changes from contamination as well as chemical and biological degradation. Thus stringent procedures and protocol are essential to preserve the chemical integrity of the sample before analysis.

Obtaining a high quality data base requires a quality assurance program which includes the following phases of monitoring:

1. Organization and planning;
2. Site selection to obtain representative samples for the region;
3. Field operations;
4. Laboratory operations;
5. Data handling, validation, assessment and reporting; and
6. Documentation.

Quality control and quality assurance protocols for the above phases presented herein can be used, or they can be adapted for the quality assurance program of any precipitation network. Procedures required to conduct the field and laboratory operations are in the companion O&M Manual (1).

The purpose of this quality assurance manual is to provide guidelines and protocols for operators, project officers, and program managers carrying out a quality assurance program in all phases of precipitation monitoring. The material in this manual is based primarily on the quality assurance guidelines in the EPRI (Electric Power Research Institute) Acid Precipitation Study in the Northeastern United States, the NADP (National Atmospheric Deposition Program), and MAP3S (Multi-State Atmospheric Power Production Pollution Study). The EPA handbooks for quality assurance of air pollution measurements (2,3) were used as guides for format and content. To have this acid precipitation manual stand alone without requiring reference to the O&M manual (1), some duplication of material was necessary.

References

1. *Operations and Maintenance Manual for Precipitation Measurement Systems,* U.S. Environmental Protection Agency, Research Triangle Park, N.C., (in press).
2. *Quality Assurance Handbook for Air Pollution Measurement Systems - Vol. I - Principles,* U.S. Environmental Protection Agency, Research Triangle Park, N C , EPA-600/9-76-005 (March 1976).
3. *Quality Assurance Handbook for Air Pollution Measurement Systems - Vol. II - Ambient Air Specific Methods,* U.S. Environmental Protection Agency, Research Triangle Park, N.C., EPA-600/4-77-027a (May 1977).

2.0 Quality Assurance Objectives

The agencywide EPA quality assurance policy stipulates that every monitoring and measurement project must have a written and approved quality assurance (QA) project plan (1,2). This requirement applies to all environmental monitoring and measurement efforts mandated or supported by EPA through regulations, grants, contracts, or other formal means not currently covered. To generate and report monitoring data of the highest quality, no precipitation monitoring project should be initiated without a written, approved QA project plan.

Each agency or laboratory generating precipitation data has the responsibility for implementing at least minimum procedures which assure that precision, accuracy, completeness, and representativeness of the data are known and documented. In addition, each should specify the quality levels which data must meet to be acceptable.

All project personnel should be familiar with the policies and objectives outlined in the QA project plan to assure proper interaction between the field operations, laboratory operations, and data management.

2.1 QA Project Plan Elements

The QA project plan should specify the policies, organization, objectives, functional activities, and QA and QC activities needed to achieve the data quality goals of the project The 16 items listed below must be addressed in each QA project plan:

1. Title page with provisions for approval signatures,
2. Table of contents;
3. Project description;
4. Project organization and responsibility;
5. QA objectives for precipitation measurement data in terms of precision, accuracy, completeness, representativeness, and comparability;
6. Sampling procedures;
7. Sample custody;
8. Calibration procedures and frequencies;
9. Analytical procedures;
10. Data reduction, validation, and reporting;
11. Internal quality control checks and frequencies;
12. Performance and system audits and frequencies;
13. Preventive maintenance procedures and schedules;
14. Detailed routine procedures for assessing data precision, accuracy, and completeness of specific measurements;
15. Corrective actions; and
16. Quality assurance reports to management

All measurement results must be representative of the media (air, precipitation, etc.) and the conditions. Data quality objectives for accuracy and precision established for each measurement parameter should be based on prior knowledge of the measurement system; on method or validation studies using replicates, spikes, standards, calibrations, recovery studies, and blind samples, and on requirements of the specific project.

2.2 Specific Objectives

The QA objective is to produce data that meet the user's requirements and the monitoring goal. The QA activities described in this manual are designed to assist in generating data that are complete, precise, accurate, representative, and comparable.

Completeness-In general, precipitation data can be considered complete if 90% or more of the total possible observations of events are available. The percentage of valid usable chemical analysis data can be slightly lower due to sample contamination in the field before shipment and due to container leakage in transit.

Precision and Accuracy -Interlaboratory studies conducted by EPA's Environmental Monitoring Systems Laboratory (EMSL) on water (not precipitation) systems indicate about ±10% precision and accuracy for conductivity and ±0 1 pH unit. Precision and accuracy for chemical analysis are determined separately by each laboratory for each analytical technique and range

Representativeness - Data must be representative of the conditions being measured This is addressed initially in the siting criteria (Section 5.0) and later in discussions of continuous observations of land use and development which can impact the data generated by the monitoring site.

Comparability - Data reported by different networks should be in consistent units to allow for data comparison; the recommended units are:

Sample weight	gm
Precipitation	mm
pH	pH units
Conductivity	micromho/cm or microS/cm
Concentration	micromoles/liter

Implementation of these QA objectives will produce data that are complete, accurate, precise, representative and comparable. Attainment of these objectives requires involvement of the QA coordinator in the planning stages of the measurement project. This allows the identification of areas with potentially large negative impact on data quality and provides a mechanism for instituting a system of internal QC, corrective action, data validation, and external assessment of precision and accuracy to avoid such weak areas. Each of the objectives is discussed extensively in the following sections.

2.3 References

1. D.M. Costle, *Administrator's Memorandum, EPA Quality Assurance Policy Statement,* U.S. Environmental Protection Agency, Washington, D.C., May 30, 1979.
2. D.M Costle, *Adminstrator's Policy Statement, Quality Assurance Requirements for all EPA Extramural Projects Involving Environmental Measurements,* U.S. Environmental Protection Agency, Washington, D.C., June 14, 1979
3. U.S. EPA Quality Assurance Management Staff, *"Interim Guidelines and Specifications for Preparing Quality Assurance Project Plans",* QAMS-005/80, U.S. Environmental Protection Agency, Washington, D.C., December 29, 1980

3.0 Planning and Organization

The agencywide EPA policy requires participation by all EPA regional offices, EPA program offices, EPA laboratories, and States in a centrally managed QA program, and the policy includes all monitoring and measurement efforts. Accordingly, a QA program plan prepared by each program office, regional office, and laboratory should include the overall policies, organization, objectives, and functional responsibilities designed to achieve data quality goals for monitoring and measurement activities. The 11 elements required in any QA program plan (1) are:

Identification of organization;
Description of the organization responsibilities;
QA policy statement;
QA management;
Personnel qualifications;
Facilities, equipment and services;
Data generation;
Data processing;
Data quality assessment;
Corrective actions; and
Implementation requirements and schedules.

Monitoring for precipitation chemical analysis requires strong interfaces between field operations, laboratory operations, and data management. Quality assurance management should be a separate function in the organization.

3.1 Personnel Assignments and Responsibilities

3.1.1 *Organization*

A precipitation monitoring network involves interdependent field monitoring and laboratory operations. Each operation has its own QA aspects. The field monitoring sites and the laboratory can be run by independent agencies or organizations; however, the results are reported to and are the responsibility of the program manager. Reporting directly to the program manager are the field manager and the laboratory manager or supervisor. The QA coordinator should also report directly to the program manager. Brief discussions of the qualifications and duties of the program personnel are presented below.

3.1.2 *Program Management*

A program manager is required to assure that high quality data are generated within the time and funding constraints of the program. The manager must keep abreast of all developments, make necessary decisions, review data and QA reports, issue progress reports, and interpret the results. The program manager should have a degree in chemistry and some experience in managing projects. Full time employment is recommended. This position can be combined with that of the field manager

3.1.3 *QA Coordination*

A QA coordinator should report directly to the program manager with inputs into the other program functions and with reports on the quality of the data generated and on corrective actions that need to be taken

3.1.4 *Field Operations*

The personnel needed to carry out the field duties in a precipitation monitoring network include a field manager and station operators.

Field Manager - The field manager may be a member of the agency or organization operating the stations or a member of the central laboratory staff; should have a college degree, preferably in chemistry; should be familiar with all the procedures; and should have experience in the operation of all equipment. The duties are to solve field problems, to notify the program manager of such problems, to oversee, and to train, or coordinate the operators.

Station Operators - The operator's duties at the station require only his part time presence. Station operators should have a technical background, but need not have a college degree. All operators should have the training to perform at the necessary level of knowledge and the skill required to obtain and report high quality data A short-term course in "hands-on" training is recommended; this should be followed by on-the-job observation immediately after the course and by a semi-annual inspection thereafter. The training should cover all pertinent aspects of the O&M manual (2), which will be given to all personnel; the O&M manual contains the procedures necessary to generate a high quality data base and a schedule of tasks. If, at any time, an operator's performance deteriorates, additional training must be provided by the field manager as soon as possible, by a refresher course or by on-site guidance (Section 6.7).

3.1.5 *Laboratory Operations*

Each analytical laboratory should have at least the following types of employees (1) director, (2) supervisor, (3) analyst and (4) QC chemist. Information on requirements, training, and supervision of these people is presented below.

Laboratory Director - This position is recommended, but not required if the laboratory has a supervisor; it may be combined with the supervisor position listed below. Either a laboratory director or a laboratory supervisor is required. The director should have a minimum of one year's laboratory analytical experience in water/wastewater related measurements; should have a degree in chemistry; and should be employed full time.

Laboratory Supervisor - This position is not required if there is a laboratory director, but it is recommended that a laboratory supervisor be employed full time, and have similar academic training and experience to that specified for the laboratory director.

Laboratory Analyst - This person should be employed full time, and trained to perform with some supervision all routine chemical measurements on water samples Academic training should be completion of at least 1 year of college chemistry and/or a laboratory-oriented vocational course; 1 year of experience in water/wastewater analysis is recommended, but if this experience is lacking, a minimum of 30 days of on-the-job training in measurements performed by the agency is highly recommended. The analyst must be supervised by an experienced professional scientist—the laboratory director, the supervisor or a similarly trained individual.

Quality Control Chemist - This responsibility is not necessarily a full time position, it may be part time supplemented by other program duties. The percentage of the chemist's time dedicated to QC is dictated by the size and complexity of the program.

This individual should have a minimum of a bachelor's degree in chemistry, engineering, or mathematics with at least 2 years of environmental or 1 year of QC experience. This position is under the general supervision of the laboratory director, but with access to the program manager. Duties are to implement and monitor the routine application of QC activities in the laboratory.

The individual can also participate in a formal program to train new employees and to update skills of older employees.

Before analysts are allowed to analyze samples, they should demonstrate their proficiency Each new analyst should be instructed in instrument operation, and should be allowed to conduct an instrument performance study (Section 4 3.3) Analyst performance can be evaluated by control charts of critical QC parameters (Sections 5 5 and 5.8); if these charts indicate a problem, the analyst should be given further training.

3.1.6 *Data Management*

People involved in data acquisition, reduction, and reporting are the field operator, the analyst, the data entry staff, the laboratory director, the program manager, and the designated QA coordinator. Presented here is an outline of primary duties assigned to different members of the data management team:

Field Operator - Preparation of field data forms, and QC of data form preparation

Analyst - Reading or transcription of strip charts, and entry of data to computer

Laboratory Supervisor - QC check of strip chart reading, preparation of data forms, QC of data form preparation, and review of computer-generated QC information or control chart preparation and interpretation.

Data Processing Personnel - Input of data from data sheets, verification of input for keypunch errors, and update of computer files.

QA Coordinator (Officer) - Review of data, preparation of QA reports and submittal of audit data, and recommendations to project manager.

3.2 Designation of QA Responsibilities and Duties

3.2.1 Quality Assurance Coordinator

The QA coordinator should monitor performance as follows.

1. Review the monthly QC plots generated for each analysis to verify that QC data are acceptable and to identify any consistent bias trend.
2. Evaluate the Monthly Field Audit Report prepared by the QC chemist to assess the accuracy of field analyses and to identify needs for corrective actions
3. Review all of QC information presented with each set of analytical data to be reported — including data from AC reports, ion summation values, and QC chemist's independent internal audit report.
4. Evaluate laboratory and field operations by conducting system audits and reporting them to the project manager.
5. Prepare quarterly reports to management that summarize QA activities and assess data quality in terms of precision and accuracy trends for both the field and the laboratory operations.

3.2.2 *The QC Chemist, the Analyst, and the Data Clerk*

Besides QA, routine QC activities are carried out in laboratory operations by the QC chemist, the analyst and the data clerk

The QC chemist introduces blind audit samples as an independent check on data quality, and issues a monthly report updating control limits for all parameters. All data given to the laboratory director should have been evaluated by the analyst's supervisor and the QC chemist

The analyst performs the analyses and evaluates analytical performance in real time, using readily available QC information. As soon as possible after analysis, the supervisor evaluates the computer-generated QC information for all QC parameters; reanalyzes the data if necessary; and finally, when data are "in control" (according to the supervisor) releases the data for reporting to the laboratory supervisor or director, who submits them to the project manager

The data clerk inputs analytical and field data into the computer, checks and corrects the data input, and generates reports and graphs of QC information.

3.3 References

1. U.S. EPA Quality Assurance Management Staff, *Guidelines and Specifications for Preparing QA Program Plans,* QAMS-004/80, U S. Environmental Protection Agency, Washington, D.C, September 20, 1980.
2. *Operations and Maintenance Manual for Precipitation Measurement Systems,* U.S. Environmental Protection Agency, Research Triangle Park, N.C., (in press).

4.0 Documentation

4.1 Document Control

A system of document control should be established for documentation of all precipitation monitoring field and laboratory operations — siting, sampling, analysis, QA data handling, and validation. The system should be patterned after the indexing format of the QA handbook (7) for updating operational procedures and adding results of special studies and other related documents. The indexing format at the top of each page should include:
Section number.
Revision number
Date of revision
Page number.
The elements of a precipitation measurement project for document control should include:

1. Field operations and maintenance procedures,
2. Analysis procedures,
3. Auditing procedures,
4. Computational and data validation procedures,
5. Quality assurance plan, and
6. Quality assurance manual.

4.2 Internal Documentation

A central file of all data, reports, correspondence, and so forth should be maintained by the project manager. In addition, a data file should be kept by the laboratory. Records in the files should meet the following requirements:

1 Records should have identification numbers and must be kept for at least 3 years by the agency in an orderly, accessible form; records should include all raw data, calculations, QC data, and reports.
2. Data in laboratory records must include the following information:
   A. Sample identification number,
   B. Sample type,
   C. Date sample received in laboratory,
   D. Collection data (time, date, volume, and so forth, if laboratory responsibility).
   E. Date of analysis,
   F. Name of analyst,
   G. Results of analysis (including all raw data), and
   H. Name of person receiving the analytical data.
3. If applicable, the laboratory should follow chain-of-custody procedures from receipt of sample through completion of analysis; the following are guidelines:
   A. Computer printouts or report forms verified against laboratory records before data release,
   B. Bound notebooks with numbered pages,
   C. Sampling information records (e.g., field data forms) with dates, time, site location, sample amount, and so forth.
   D. An example of the data handling and reduction system examined by legal counsel to determine soundness in possible litigation.

4.3 Reports

Each organization must periodically assess its QA program (2). The QA project plan provides the mechanism for reporting to management on QA activities, on the performance of measurement systems and on data quality. As a minimum these reports should be submitted semiannually and they should include (3).
Periodic assessments of measurement data accuracy, precision, and completeness;
Results of performance audits;
Results of system audits; and
Significant QA problems with recommended solutions.
The designated QA coordinator should be responsible for the reports, and should provide a separate QA section to the final report to summarize data quality information contained in the periodic reports.

4.4 References

1. *Quality Assurance Handbook for Air Pollution Measurement Systems -Vol. I-Principles,* U.S. Environmental Protection Agency, Research Triangle Park, N.C., EPA-600/9-76-005 (March 1976).
2. U.S. EPA Quality Assurance Management Staff, *Guidelines and Specifications for Preparing Quality Assurance Program Plans,* QAMS-004/80, U.S Environmental Protection Agency, Washington, D.C., September 20, 1980.
3. U.S. EPA Quality Assurance Management Staff, *Interim Guidelines and Specifications for Preparing Quality Assurance Project Plans,* QAMS-005/80, U.S. Environmental Protection Agency, Washington, D.C , December 29, 1980.

5.0 Siting

Criteria for site selection and evaluation are similar to those proposed by the World Meteorological Organization (1) In the design of a monitoring program, the program objectives and network station density must be considered Programs can be grouped as baseline monitoring, long-term trend monitoring and research. Stations may be characterized as remote, rural, and urban, however, they should yield representative results for the region although this characterization is somewhat oversimplified Precipitation composition, long-range transport of acid precipitation and precipitation comtaminants, and the impact of a source shown by its distance or time scale are not well known Many large point sources are in rural areas. Thus, choosing optimum site locations to monitor either the impact of a specific source or regional effects not related to any source is difficult Instead of remote, regional, urban, and so forth, a complete description of the site and its surroundings could be given so the user of the data could decide what the station is measuring or what it represents However, to aid the decision and for convenience, site area categories have been used. In all categories, the criteria are of prime importance If no site in an area meets the criteria, a site in an alternate area must be selected

Network station density, which helps define the spatial and temporal resolutions of the data obtained, is determined by the program objectives, the area meteorology and topography, and the budgetary constraints

5.1 Network Design Considerations

In designing a precipitation monitoring network, stations are located either singly or in combination, according to the objectives of the program

1 Measurement of baseline (remote area precipitation),
2. Measurement of representative regional (rural) precipitation, or
3. Measurement of urban area (local impact pollutant emission sources) on precipitation

These three are generally differentiated by concentration levels. The background or remote station should show contamination primarily due to natural processes; the regional station would be affected primarily by long-range transport; and the urban site would show high concentrations due to a polluted local environment To select station locations, it is necessary to have detailed information on the locations of emission sources, the regional variabilities of ambient pollutant concentrations, the precipitation amounts, the prevailing winds, and other meteorological data Thus, the design of a network needs to address details such as the number, location, and type of sampling stations and equipment to be used. Due to the variation in acid precipitation caused by terrain, meteorological conditions and demographic features, each network should be designed individually after considerimg physical evidence, economic factors, and program objectives

5.2 Site Selection Criteria

Selecting a precipitation monitoring site is as important as selecting a measurement technique to obtain representative data The variabilities and the long-range transports of pollutants make it difficult to determine whether a site is collecting precipitation data representative of an area The station should collect samples representative of both the amount and the composition of the precipitation in the area

The transport and diffusion of air pollutants and their resultant concentrations in precipitation are complicated by topography; minor topographical features may exert small effects, but major features such as valleys or mountain ranges can affect large areas In mountainous regions, precipitation tends to be unevenly distributed due to topographical lifting of clouds and deflecting of air flows; such unevenness should be recognized for site selection. Near a large body of water, sea or land breeze motions may change direction; in the daytime, the winds may come from the water, but at night they may come from land. Because of these changes, area sampling representation would be affected In such areas, more than one station should be installed but the number of sites should depend on site availability and on funding level

To optimize site locations for different station categories, the following selection criteria are listed in order of importance In the baseline and regional categories, the site must meet the first three as well as all those in Section 5 3

5.2.1 *Baseline Scale*

The station should be in a location where the effects of human activities are negligible It is difficult to find locations which meet all of the following criteria (2,3,4) but each should meet the following as closely as possible:

1 The station should be in an area where no significant changes in land-use practices within a 100 to 1000 km (depending on prevailing wind direction) from the station are anticipated during the study period.
2 The station should be far away from major population centers, major highways, industries, air routes, and large natural sources (e g. geysers), it should be in remote, uninhabited, or sparsely inhabited areas. If an isolated island is used, data corrections for sea salt aerosols should be made.
3. The site should not have a history of frequent local natural phenomena such as forest fires, dust and sand storms, or volcanic activities
4 The site should have provisions for setting up a meteorological and aerometric monitoring station (2,3,4,5).
5. The site should be readily accessible on a flat or gently sloping terrain (less than 20°), and sheltered from strong winds

5.2.2 *Regional Scale*

Site selection criteria for a regional monitoring network are (1,6,7,8,9):

1. The general area should be free from influences of large anthropogenic sources such as cities or towns; industrial, sewage or power plants, refineries, commercial areas, and airports; and large local natural sources. Such pollutant sources should be distant enough for pollutants not to unduly effect the precipitation chemistry. If, the site location must be near a large source (e.g , within 50 km), the station should be in the prevailing upwind direction from the source.
2. The immediate area of the site should be separated from local sources such as houses, active farmlands or orchards, marshes and swamps, landfills, roads; such sources should be several kilometers distant, and preferably downwind.
3. If stations are near pollutant sources, the site location should

avoid undue influence by a single pollutant source.

4. If an area is characterized by a common type of land use, the collector can be near the common pollution source
5. The site should have provisions for setting up meteorological and aerometric monitoring equipment (2,3,4,5).
6. The site should be readily accessible on a flat or gently sloping terrain (less than 20°), and sheltered from strong winds.

The selected site should be evaluated for representativeness and for local contaminations by installing a temporary grid of neighboring satellite samplers around it; sampling procedures for this temporary network should be comparable to those in the original site, data collection by the network is recommended for a few months, not to exceed 1 year. The permanent site should be selected after evaluating the site's representativeness by analyzing data from stations in the temporary network.

For evaluating the effects of long-range transport on acid precipitation, the average interstation distance can be several to several hundred kilometers

5.2.3 *Urban Scale (or Local Scale)*

To study urban areas or the effects of point sources on precipitation, an array of monitoring stations should be near the source in the area of interest. The stations must not be near other sources or at sites that do not follow the criteria (Section 5.3). The network station density depends on the objective of the monitoring program and on budgetary considerations For studying the local effect due to a single point or area source, the average interstation distance should be of the order of kilometers. However, actual station density and interstation distance should be decided by the desired spatial resolutions. The following criteria apply:

1. If an area is characterized by a type of land use, the site can be near such pollution sources.
2. The site should have provisions for setting up meteorological and aerometric monitoring equipment (2,3,4,5).
3. The site should be readily accessible on a flat or gently sloping terrain (less than approximately 20°), and sheltered from the strong winds.

5.3 Sampler and Rain Gauge Siting Criteria

Placements of precipitation samplers and rain gauges should assure the adequacy of the site to collect unbiased samples Samplers and rain gauges should stand far enough from trees, hills, overhead power lines and other obstructions to minimize interference with sampling. Natural and manmade obstructions may cause turbulence and/or contamination, and may cause nonrepresentative samples; thus no object (even if smaller than the collector) should be within a few meters of the collector, and no object should cast a rain shadow on the collector. An open, flat, grassy area, surrounded by trees at least 100 m away, but near no sources (unless a local source is to be studied) would be an ideal site.

Criteria for placement of collectors (both samplers and rain gauges) are:

1. The horizontal distance between a large obstruction and the collector should be at least twice the obstruction height, or the viewing angle of an obstruction from the collector should be less than 30° above the horizon
2. The horizontal distance between an obstruction and a collector of comparable height should be at least one unit height of the taller of the two.
3. The collector should be far from mobile pollution sources; routine air, ground, or water traffic should not come within 100 m of the collector site.
4. The distance between any overhead wires and the site must be far enough for the samples not be affected; thus, criterion 1 (above) should assure that there are no overhead wires.
5. The collector should be at least 100m from open storage of agricultural products, fuels, or other foreign materials.
6. The ground surface around the collector should not be loose soil; it should have a grass cover or gravel to minimize splash and airborne ground surface particulates that contaminate samples.
7. Wet/dry collectors should be oriented parallel to the prevailing wind direction with the wet bucket upwind of the dry bucket (so that the dry bucket does not obstruct the wet bucket).
8. The rain gauge should be positioned parallel to the collector and the prevailing wind direction. If the gauge has an access door (to a recorder, weighing or drive mechanism), the door should be kept closed and the gauge should be mounted with the door facing away from the wind to prevent precipitation entering the compartment.

The distance between certain obstruction (e g., growing trees and newly erected structures) and the collector should be checked periodically Criteria 2 should minimize the sampling area required when more than one collector or when a sampler and rain gauge are on the site, and should minimize the effect of turbulence caused by obstructions.

5.4 Site Evaluation Description

5.4.1 *Station Identification*

All stations must be identified by documentation of site characteristics to facilitate evaluation of data generated at that site and interpretation of the monitoring data. Typically, the site identification record should contain the following:

1. Data acquisition objective (baseline, trend, or research monitoring)
2. Station location (address, map coordinates, elevation, etc.)
3. Scale of representativeness (remote, regional, or area type; i.e., industrial, agricultural, forest, urban, etc.)
4. Instrumentation checklist (manufacturer, model number, measurement technique, etc.)
5. Important pollutant sources (point and area sources, their emission concentrations, proximities, pollutants, etc.)
6. Topography description (trees, hills, valleys, bodies of water; type, size, proximity, orientation, etc.); photographs of the monitoring site covering a 360° view from the precipitation collector are recommended).
7. Site diagram properly scaled (equipment configuration, vegetation, manmade structures, access road, electrical powerlines, etc.).

The site identification should be documented by filling out a Site Description Report (Section 5.5).

5.4.2 *Station Classification and Evaluation*

Each station should be initially classified by using the information in the Site Description Report Section 5.5 gives a modified version of one developed by NADP(8). The five site classes defined depend on the sophistication of instrumentation in the station as well as on the satisfaction of siting criteria.

Class I

1. Station satisfies all siting criteria (Section 5.3),
2. On-site instrumentation includes automatic precipitation collector, a recording rain gauge, pH and conductivity meters,

meteorological sensors (wind-speed and direction), and aerometric analyzers (SO_2 and NO/NO_x).

Class II

1. Station satisfies all siting criteria (Section 5.3).
2. On-site instrumentation includes automatic precipitation collector, a recording rain gauge, pH and conductivity meters, meteorological sensors (wind-speed and direction), and aerometric analyzers (SO_2 and NO/NO_x)

Class II

1. Station satisfies all siting criteria (Section 5.3).
2. On-site instrumentation includes automatic precipitation collector, a recording rain gauge, and pH and conductivity meters.

Class III

1. Station satisfies all siting criteria (Section 5.3).
2. On-site instrumentation includes automatic precipitation collector, nonrecording rain gauge, and pH and conductivity meters.

Class IV

1 Station does not satisfy all siting criteria (Section 5 3).
2 On-site instrumentation identical to Class I stations.

Class V

1 Station does not satisfy all siting criteria (Section 5.3)
2. On-site instrumentation identical to Class II stations.

After initial classification, an on-site visit should be made by the QA coordinator to evaluate and certify each monitoring station as soon as possible after the start of operation to assure the quality of monitoring data. Classes IV and V must be only temporary, since they are in noncompliance with siting criteria. The project manager (or a designee) must be sure that siting deficiencies are corrected within a reasonable time. Reasonableness depends on the deficiencies found; most should be corrected within 30 days but for deficiencies requiring longer time, a schedule must be established for compliance attainment. When corrections are made, documentation should be provided to the QA coordinator and program manager and the station classification should be changed by them.

All sites should be evaluated again once a year to establish that they maintain compliance. All aerometric and meteorological instrumentation should conform to standard ambient monitoring guidelines (4,10).

5.5 Site Description Report

All monitoring stations should be properly identified and classified using the report forms on the next pages.

A. Data Acquisition Objective (Description) _____

B Site Category

1. Station Identification _____ 2 County _____ 3 State _____
4 Latitude* _____ 5 Longitude* _____ 6 Elevation _____ (m)
7 Station environment. Remote _____ Rural _____
Suburban _____ Urban _____ Commercial _____
Industrial _____
8. Name of official _____ position _____
9. Mailing address _____
(number and street)
_____
(city) (state) (zip)
10. Phone ( ) - _____

C. Instrumentation

1. Precipitation Collector Type: Automatic _____, Non-automatic _____
Manufacturer _____
Model _____
Diameter (I.D.) of Sample Bucket _____ (cm) Serial No. _____

2. Raingauge:
1 Recording _____ Non-recording _____
2 Type: Weighing _____ Tipping Bucket _____ Other _____
3. Manufacturer _____ Model _____
4. Funnel Size: _____ (cm) Serial No. _____

3. NO_x Monitor.
1. Recording _____ Non-recording _____
2. Type: Chemiluminescent _____ Other _____
3. Manufacturer _____ Model/Ser. No. _____

4. SO_2 Monitor:
1. Recording _____ Non-recording _____
2. Type: Fluorescent _____ Other _____
3. Manufacturer _____ Model/Ser. No. _____

5. Other Aerometric:
1. Sensor: _____ Recording _____
Non-recording _____
2. Type _____ Serial No. _____
3. Manufacturer _____ Model _____

6. Other Meteorological Instrument:
1. Wind Speed Sensor: Type _____ Serial No. _____
Manufacturer _____ Model _____
2. Wind Direction Sensor: Type _____ Model _____
Manufacturer _____
Serial No. _____
3 Temperature Sensor: Type _____ Model _____
Manufacturer _____
Serial No. _____
4. Solar Radiation Sensor: Type _____ Serial No./Model _____
Manufacturer _____

7. pH Meter:
1. Type _____ Temp. Compensated: _____
2. Manufacturer _____ Model/Ser. No. _____

8. Conductivity Meter:
1. Type _____ Temp. Compensated: _____
2. Manufacturer _____ Model/Ser. No. _____

*To be reported in xx.yy.zz format corresponding to deg., min., sec.

D Site Documentation:

1. Local topographic map *(Scale 1:250,000)*

   Identify the site location and major sources on the map.

2. Sketch a map to document the environment within a ½ mile radius of the site. Include the following information on the drawing where applicable.
   Site Diagram and Equipment Configuration at Center of Drawing
   Roadways with Names (paved and unpaved)
   Parking Areas (paved and unpaved)
   Stationary Sources (NEDS#)
   Buildings (number of stories)
   Undeveloped Land (ground cover)
   Tree Lines or Clusters
   High Power Lines
   Topographical Features (Valleys, Hills etc)
   Bodies of Water
   North Direction

3. Site photographs, labelled to indicate the four compass directions.

5.6 References

1. *WMO Operational Manual for Sampling and Analysis Techniques for Chemical Constituents in Air and Precipitation,* World Meteorological Organization Pub. No 299 (1974).
2. *Quality Assurance Handbook for Air Pollution Measurement Systems, Vol. II - Ambient Air Specific Methods,* EPA-600/4-77-027a, Research Triangle Park, NC (1977).
3. *Guide to Meteorological Instrument and Observing Practices,* World Meteorological Organization Pub. No. 8, TP8 (1971).
4. *Ambient Monitoring Guidelines for Prevention of Significant Deterioration (PSD),* EPA-450/1-78-019 (1978).
5. *Quality Assurance Handbook for Air Pollution Measurement Systems, Vol. I - Principles,* EPA-600/9-76-005, Research Triangle Park, NC (1976).
6. Galloway, J.N., C. Hall, and G E. Likens, The Collection of Precipitation for Chemical Analysis, Tellus 30, 71 (1978).
7. Granat, L., Principles in Network Design for Precipitation Chemistry Measurements, *Proc. Symp. on Atmospheric Contribution to the Chemistry of Lake Waters,* J. Great Lakes Res. 2 (1), 42 (1976).
8. *Site Selection and Certification,* National Atmospheric Deposition Program (1970).
9. Bowersox, V.C., Acid Precipitation at a Rural Central Pennsylvania Site, MS Thesis, Dept. of Meteorology, Pennsylvania State University (1980).
10. EPA Ambient Air Quality Surveillance Regulations, Code of Federal Regulations, Title 40 Part 58 (May 10, 1979).

6.0 Field Operations

The primary aims of quality assurance requirements for field operations are to maximize sample collection and to collect and handle samples in a way that preserves their integrity and identity. Precipitation samples are very dilute, and thus very susceptible to contamination. The goal of this section is to present requisites for obtaining high quality data; discussed are facilities, method selection, acceptance testing, equipment installation and operation, sampling methodology, field measurements, network evaluation, and documentation

6.1 Facilities

All field facilities should be accessible and should have a clean shelter, a level table, deionized or distilled water (conductivity less than 1.5 micromho/cm), and a sink or drain If deionized or distilled water cannot be produced at the site, it can be purchased at local supermarkets or drug stores. A refrigerator and a 110v AC outlet are highly desirable; the former is necessary for event or sequential sampling to preserve the samples until they are shipped. For weekly sampling, the samples should be shipped within 24 h of collection so refrigeration is not important. Since samples can be at ambient temperature in the collector for as long as 1 week, another few hours after collection should not matter

The precipitation collector and the recording rain gauge can be run on either 12v DC by storage batteries or 110v AC. Both means have advantages and disadvantages With batteries there can be no loss of operation due to a power failure, and sites can be located in areas with no power. However, batteries must be periodically recharged, and power output drops in cold weather can result in collector downtime. Furthermore, if large current usage is required (e g., for heating), batteries are not recommended.

6.2 Method Selection

Similar equipment and supplies are required at a station for event, daily, or weekly sampling, weekly sampling is most common at present. For sequential sampling, a different type of collector is needed. For event, daily, or sequential sampling, a refrigerator, polyethylene bottles with caps, polyfoam insulated shipping containers, and freeze-gel cold packs are recommended for sample storage and shipment. A list of equipment for typical weekly sampling is in Table 6-1, for other types of sampling, the list should be changed to include a different type of collector, a more sensitive balance (2.6 kg) capacity, polyethylene bottles and caps, and means for shipping the sample in a cold state.

6.2.1 *Precipitation Collectors and Rain Gauges*

The rain gauge and the precipitation collector serve different functions. The rain gauge measures the amount of precipitation. The precipitation collector collects a sample for chemical analysis The two devices are not interchangeable.

6.2.1.1 Precipitation Collectors—The precipitation collectors must meet the following criteria

1. Reliable automatic operation - collector container opens at start of precipitation and closes after event ends
2. Prevention of contamination of wet sample by dry deposition.
3. Minimization of evaporation
4. Container inertness to sample constituents of interest

Collectors, which adequately meet these criteria, are available. For event, daily, or longer-time rain sampling, the most satisfactory collector is one based on the design of the Department of Energy's Health and Safety Laboratory (HASL) (1); however, the sampler is less efficient for snow collection.

The first three criteria are met by means of a precipitation sensor and a motor-driven tightfitting lid for the collector container. When the grid and plate of the sensor are shorted by a drop of water, the motor is activated, lifting the lid from the container. The sensor has two heating circuits. one goes on to melt snow or ice (on the sensor) when the temperature is below 2°C, and the other is activated when the lid lifts off the sample bucket to heat the sensor to about 55°C and to increase the rate of evaporation of water from the sensor. Heat hastens the sealing of the sample by the lid after precipitation ceases, thus minimizing the exposure times to dry fallout and to snow blowout from the collector A seal between the container and the lid is achieved by a plastic foam gasket under the lid and by a spring load; however in strong winds, the lid will wobble and allow some contamination to enter the sample bucket

To ensure inertness to major constituents in acid precipitation, use polyethylene sample buckets (1,2). Use only plastic (or Teflon) containers for inorganic constituents. For cost, durability, and availability, high-density linear polyethylene containers are generally employed. Glass or metal can affect inorganic sample integrity, but either should be used if organics are studied

For subevent or sequential samplers, the same requirements as above hold, but mixing between sequential samples should be minimized because these samplers separate samples on either a volume or time-of-collection basis. In volume-based sampling, precautions must be taken to minimize mixing or carry over of samples. For time-based sampling, there should be provision for overflow during heavy rainfalls. For sequential sampling, the time corresponding to each subevent specimen must be known for correlations with other data. Sequential samplers vary greatly in sophistication from a series of connected bottles to completely automated and electrically operated designs (3-8). One of the latter is available commercially (8).

Table 6-1. *Field Equipment List for Weekly Sampling*

	No./site
Automatic precipitation sampler (Aerochem Metrics #301)	*1*
Collection containers (3.5 gal) for collector	*3*
Recording rain gauge with event marker	*1*
Rain gauge mount	*1*
pH meter, electrode	*1*
Buffers, pH 3.0, 4.0, 6.0, 7.0 and 8.0 (1 liter each)	*1*
Conductivity meter and cell	*1*
Standard KCl solution, 74 micromhos/cm (500 ml)	*1*
Temperature probe	*1*
Balance (20 kg capacity) or graduated cylinder (2 liter)	*1*
Set of attachment weights for balance (1,2,2,5,10 kg)	*1*

6.2.1.2 Rain Gauges—In case of collector malfunction and to reference all the precipitation amounts against a standard, a rain gauge is used to record the quantity of precipitation Recording rain gauges are of two basic operational designs—the weighing type and the tipping bucket type Both types of gauges should be capable of measuring precipitation to approximately 0 25 mm (0.01 in.) and they should be accurate to a few percent Weighing gauges measure within about ±0 76 mm (0.03 in), but their accuracy of about 1% of full scale is independent of precipitation rate. The generally accepted accuracy for tipping bucket gauges is 1% for precipitation rates of 25 mm/h (1 in/h) or less, 4% for 75 mm/h (3 in/h), and 6% up to 150 mm/h (6 in/h); rates are either measured directly or derived from the cumulative data. Data from the tipping bucket are amenable to telemetry

The recording rain gauge should have an event marker pen to indicate when the collector is open and closed. Such a pen typically rises from its baseline when the collector lid opens, and remains actuated until the lid closes and the pen falls to its baseline position To prevent an event marker pen from interfering with a sample trace pen, the two must be offset on the time axis, thus only one pen can be set at the correct time, and care must be taken not to use the incorrect beginning or ending times. Since the operator is seldom present to observe collector behavior during an event, the event pen marker is invaluable in indicating malfunction.

6.2.2 *pH and Conductivity Apparatus, Temperature Probe*

The pH and conductivity of a 20 ml aliquot of the sample should be measured at the station as soon as possible after the sampler is collected and after it has reached the same temperature as the calibration solutions. The sample and the aliquot should be protected from contamination during this time.

6.2.2.1 pH Apparatus—The pH meter and electrode must be capable of measuring within ±0 03 unit precision with an accuracy of 0.05 unit. Meters should have an impedance of at least 10^{11} ohms A combination glass and reference electrode of the nongel type with an unprotected membrane bulb is preferred. The combination electrode requires less sample and fewer washings than two separate electrodes; electrodes with shielded bulbs are more difficult to clean, and are thus more prone to yield errors. When a new electrode is obtained, it should be equilibrated overnight in a pH 4 or 7 buffer solution, as recommended by the manufacturer, before it is used The electrode should be stored in pure water, in a 74 micromho/cm KCl conductivity standard, or in a 0 0001N acid solution, these storage media may cause the electrode to require longer times for stabilization than concentrated buffer solutions do, but they increase the life of the electrode.

6.2.2.2 Conductivity Apparatus—The conductivity meter and cell must have a measurement range of 0 to 1000 micromho/cm, a precision of ±0 5% of range, and an accuracy of ±1.0% of range The range most frequently used is 10-100 micromho/cm A temperature-compensated cell with a cell constant of 1.0 is preferred.

6.2.2.3 Temperature—a thermistor, thermocouple, or thermometer can be used to measure temperature. The temperature probe must have an accuracy of at least 1°C and a precision of ±0 5°C.

6.2.3 *Balance or Graduated Cylinders*

The amount of precipitation sample collected can be measured with a balance or with graduates. Since the density of rain samples is approximately 1.0 g/ml at 20°C, the weight of the sample can be taken to equal its volume. The measurement of sample volume by graduates increases the chance of contamination, so use of a balance is recommended

The precipitation volume can be compared to that recorded by the rain gauge (e g , with the Aerochem Metrics collector, 16 g of sample = 0.013 in. = 0.25 mm) to calculate the collection efficiency of the sampler (Section 8.5.4). Differences between the field and the laboratory weight values (container plus sample shipped to the laboratory) indicate either loss of sample during shipment or a weighing error.

For weekly sampling, the balance must have a capacity of 20 kg and a precision of at least ±10 g. Triple beam balances meeting these requirements are readily available. The balance should be kept on a sturdy level table, and it should be zeroed before weighing The balance should be checked initially in the laboratory with 1.0 and 5.0 kg test weights. For event and sequential sampling, a 2.6 kg capacity triple beam balance with a sensitivity of at least ±1 g should be used

Graduates are not recommended, but if they are used, they should be plastic, and they should be cleaned and dried before use .To measure within ±10 ml, the graduate should not be more than 1000 ml in capacity. For large samples, several graduates or one graduate plus a clean auxiliary container (in which to empty the graduate) will be needed The graduate should be checked for accuracy in the laboratory by weighing various volumes of water from the vessel

6.3 Acceptance Testing

All precipitation collectors, rain gauges, pH and conductivity meters, and electrodes should be tested for acceptance before they are used in the field. Acceptance tests should cover the functions of the instruments. Collectors and rain gauges should be tested on site However, it is more convenient to test meters and electrodes in a central support laboratory, where common standards and procedures would be used for all instrumentation in the monitoring network. General procedures for acceptance testing are detailed below; procedures for carrying out these tests are in O & M manual (9).

6.3.1 *Precipitation Collectors and Rain Gauges*

Collector tests should include: (a) sensor heating and actuating the lid when the sensor is shorted with water drops, (b) sensor cooling and return of the lid after removal of the shorting material (water wiped dry), (c) sensor temperature attainment when lid is off of the wet bucket (50° to 60°C), (d) sensor temperature when ambient temperature is below freezing and (e) observation of lid cycling and sealing. If any of these tests indicate a malfunction, contact the manufacturer. For test c above, the temperature can be varied by a potentiometer identified by TH in the sensor circuit. In general, the malfunctions can be rectified by replacing the sensor or the motor box.

Rain gauge tests should include a check of: (a) sensitivity and accuracy, (b) clock function, and (c) pen and recorder functions For test a, add an amount of water equivalent to 0.02 in. (0.51 mm), and measure the response. For the Belfort recording rain gauge (5-780 series), 0.01 in. = 8.2 gm. The gauge can be calibrated at each inch level with a set of weights from the manufacturer or with known weights of water.

6.3.2. *pH and Conductivity Meters*

All pH and conductivity meters, electrodes, and cells should be tested in a laboratory for acceptance before being shipped to the field stations. The meters usually have a serial number affixed, but the electrodes do not, so an identification number should be affixed to each electrode. For each of the tests indicated below, a total of 10 solutions is measured, and an average value and a standard deviation are calculated.

6.3.2.1 Evaluation of Conductivity Meter and Cell—The conductivity meter and cell are acceptable if the average value for a 0.0003M KCl solution is within 2% of the accepted value, 44.6 micromho/cm at 25°C, and if the standard deviation is less than 2% The results should be recorded on the Conductivity Meter/Cell Acceptance Test form and on the Conductivity Test Summary form.

6.3.2.2 Evaluation of pH Meter—For the tests presented here, a pH electrode reference solution (Section 7.0) should be used. The field pH meters should be tested using a laboratory pH electrode whose performance has been documented. The pH meter is acceptable if the average pH and the standard deviation are within 0.03 unit of the documented values. The pH Meter/Electrode Acceptance Test form, and the pH Acceptance Test Summary form (Section 6.8.5) should be completed.

6.3.2.3 Evaluation of pH Electrodes—Each new electrode should be equilibrated overnight in the storage solution recommended by the manufacturer. Before testing, the electrode should be carefully rinsed with deionized water, and then successively placed in deionized water in a series of test tubes until a constant pH reading is achieved The electrode is acceptable if the average is within 0.1 pH unit of the average historical value and if the standard deviation is less than 0.03 pH unit. Results should be recorded on the pH Meter/Electrode Acceptance Test form and on the pH Acceptance Test Summary Form (Section 6.8.5)

6.4 Sampler and Rain Gauge Installation and Operation

For placement of neighboring collectors and rain gauges of equal or smaller height, the distance between rain gauge and collector or between collector and collector should at least equal the height of the taller object to minimize interference as well as splash effects. To ensure that the collector dry bucket is not an obstruction to the wet (or precipitation sample) bucket, the collector should be aligned either perpendicular to the prevailing winds or with the dry bucket downwind of the wet bucket. The ground surface around the collector and rain gauge should be natural vegetation or gravel; being paved may cause splashing into the collector or gauge.

The precipitation collector should be mounted on the ground so that the rim of the mouth or opening is level and at least 1 m above the ground, and it should be properly anchored against strong winds. The collector may be shielded from the wind, but it should not be put in an area where there will be excessive turbulence caused by the shield or where there are obstructive objects such as trees and buildings In the winter, loss of snow from the collector can occur due to blow out.

The sampler installation and operation are described in the manufacturer's instructions and in the O & M manual (9) The precipitation collector requires no calibration, but proper functioning should be checked frequently.

The rain gauge operation is discussed in the manufacturer's instructions The rain gauge should be calibrated according to the manufacturer's instructions after installation and at least annually (Section 6.6). A calibration check at two points, approximately half and full scale, should be made monthly

The rain gauge should be mounted on a firmly anchored support or base so that the funnel rim is level and at about the same height as the collector rim to enable comparisons of collection amounts between the two. The gauge level can be checked with a carpenter's level placed at two intersecting positions. The gauge mouth should be high enough not to be covered by snow In open areas, a wind shield (e.g., swing-leaf like the one used by the U.S. Weather Service) should be used. For rain gauges which contain a recorder, the access door to the chart drive should be on the leeward side of the prevailing winds, and should be kept closed to minimize dirt and moisture affecting the chart and the mechanism.

6.4.1 *Routine Checks on Collector, Rain Gauge, and Site*

The following tests should be carried out routinely on the precipitation collector and the rain gauge The detailed procedures for these tasks and a checklist are in the O & M manual (9).

1. *Collector Sensor Test* - At intervals which coincide with the sampling schedule, the sensor should be shorted with a piece of metal or some water to check the lid opening and sensor heating functions. When the sensor short is removed, the lid should close immediately, and the sensor should cool. The sensor should be cleaned at least monthly, or as needed.
2. *Inspection of Dry Collector Bucket* - If the collector has a dry bucket, it should be checked after an event or a time period which has deposited more than 0.25 mm (0.01 in.) of precipitation to ascertain if the bucket contains or has contained any precipitation. Precipitation in the dry bucket may be evidence of a collector malfunction. Possible causes are (a) a dirty or faulty sensor, (b) a high sensor heating temperature and/or a low precipitation rate, (c) a defective magnetic mercury switch in the motor box, (d) a lid arm is loose and/or has moved too far out from the magnetic switch to actuate it. The above causes, except for the dirty or faulty sensor, can result in the lid cycling. This could cause contamination and some loss of sample.
3. *Test of Dry Sample Bucket* - Weekly, if no event has occurred, the sample bucket should be returned to and/or tested in the laboratory for contamination due to poor initial cleaning, dry deposition, and/or handling. If contamination is frequent at a site, poor collector sealing and/or an operator handling problem are likely occurrences.
4. *Examination of the Event Pen Marker Trace* - Weekly, the event trace should be inspected to see if the lid cycled. The event trace openings and closings should correspond to the beginning and ending of the event, as indicated by the slopes of the sample weight trace. Many up and down markings in a short time may indicate lid cycling. Some cycling traces may occur during light rain events or heavy dew when no event is apparent. No lid movement traces when the sample weight trace shows an event occurred indicate a collector malfunction.
5. *Cleaning Techniques and Schedule* The collector sensor should be washed monthly with deionized water to remove dirt, salt, and film buildup. If a film persists, clean the sensor grid and plate with detergent and a toothbrush. The rim of the dry bucket should be wiped with clean tissues (e.g., Kimwipes) to prevent carry over of dustfall to the sealing gasket and to the wet bucket.
6. *Adjusting the Zero Setting of the Rain Gauge* - Daily or weekly as needed, with no precipitation in the rain gauge, adjust the zero setting. The zero setting fluctuates with temperature, but generally not more than 0.25 mm (0.01 in.).
7. *Checking the Rain Gauge Pail Level* - Whenever the rain gauge pail is removed, be sure it is replaced correctly so that it is level.

8 *Adjusting and Winding the Rain Gauge Clock* - Weekly, wind the clock (or chart drum) on the weighing gauge, and correct the time setting if necessary Be sure to correct for backlash and to set the time correctly with respect to a.m. and p.m.

9 *Rain Gauge Check* - Monthly, add several known weights or water to the rain gauge to be sure it is measuring correctly at about the 75mm (3 in.) and 125mm (5 in) levels. For the Belfort weighing gauge, 25 mm = 1 in = 820 gm A complete calibration at each inch level should be made at least annually

10 *Inspection of Rain Gauge Pens and Ink* - Weekly, the pens should be inspected to see if they have ink and are writing If they are not writing, clean the pens, refill them, and be sure they are working.

11 *Rain Gauge Chart Replacement* - At the appropriate interval, depending on the chart range, generally weekly, remove the old chart and replace it with a new one.

12. *Rain Gauge Level Check* - At 6-month intervals, measure the gauge level to be sure it is still horizontal.

13. *Winterizing* - For the precipitation collector, encase the lid arms in plastic and tape one end of the boot to the table. If necessary, to prevent the lid freezing to the bucket, attach a heater (e.g., a 40W light bulb) to the top of the lid. Check the sensor when the ambient temperature is below freezing to be sure the heater is working. Allow collected samples to warm up to room temperature before measurement. For the weighing rain gauge, remove the funnel (generally in the inlet), and add ethylene glycol antifreeze to the pail. For a tipping bucket gauge, turn on the heater.

14. *Site Maintenance and Inspection for Obstacles* - Periodically, mow the grass and inspect the site area for new obstacles (e.g , a growing tree).

6.4.2 *Corrective Action*

Any indication of a malfunction should be recorded in the logbook, and the field manager should be notified. An attempt to diagnose and correct the problem should be made with the aid of the O & M manual (9) as soon as possible. If the problem cannot be corrected, the field manager or equipment manufacturer should be asked for advice and direction. The field manager or central laboratory should maintain a supply of spare parts The diagnosis and action taken should also be recorded in the logbook.

6.5 Sampling Methodology

Since precipitation samples generally contain microconcentrations of pollutants, extreme care must be taken to avoid contaminating the sample and to preserve its integrity. This section gives the methodology for sample collection, handling, measurement and for preserving sample integrity The procedures, used to accomplish each of the above-mentioned tasks, are in the O & M manual (9).

6.5.1 *Sample Collection and Schedule*

Sampling schedules commonly include weekly, daily, event and subevent, or sequential. An event can be defined as a storm separated from a second storm by a dry interval of at least 6 h in the winter or at least 3 h in the summer. The choice of sampling schedule depends on the program objective and the available funds To correlate rain data with aerometric and/or meteorological data, a subevent, event, or at most a daily schedule must be used. To measure the amount of deposition and/or its effects, a weekly sample may be sufficient. Sampling periods longer than 1 wk are not advised because important changes in the sample can occur on standing in the collector.

6.5.2 *Handling of Plastic Containers*

Treatment of plastic containers depends on the species to be measured, the container's previous use, and its cleanliness In most cases, the cleaning should be done in the laboratory; only routine bucket rinses (when the buckets need not be returned to the laboratory) should be done in the field The final rinse water conductivity should be measured, and should be below 2 micromho/cm Procedures for cleaning plasticware are in the O & M manual (9).

The container should be capped and kept in a plastic bag until immediately before use, and it must be resealed immediately after use When a bucket is to be returned to the laboratory with or without a sample, it should not be sealed with its original lid; instead, the sample should be covered with the lid from a new bucket which is replacing the old bucket in the collector Thus the chance of contamination from the lid is minimized

6.5.3 *Sample Handling*

The sample container must be checked for precipitation at the time and frequency set by the schedule. If a sample is present, the container should be removed and weighed; the bucket swirled to help ensure a homogeneous sample, and a sample aliquot should be measured after assuring that the containers are correctly labeled A pencil or a ball point pen should be used to inscribe the label If the sample is frozen, it must be allowed to warm up to room temperature before measurement. Avoid breathing onto a sample to prevent ammonia contamination.

6.5.3.1 Weekly Sampling—After a week if no sample is present, the empty bucket can be sealed and returned to the laboratory or rinsed in the field and reused. In either case, the bucket should be rinsed with distilled/deionized water, and the conductivity of the rinse water measured to provide a blank which reflects the previous cleaning, operator handling, collector sealing, and so forth. The deionized/distilled water conductance should be checked before it is used. After cleaning, the container should be shaken dry, and reused.

6.5.3.2 Event Sampling—To minimize the number of buckets required as well as storage and shipment space, the sample should be weighed and transfered from the bucket to a labeled 500 ml wide mouth polyethylene bottle Some sample is taken for measurement and the bottle sealed. If sufficient sample (e g., more than 300 ml) is present, use about 50 ml to rinse out the shipping bottle One 500 ml bottle per event is sufficient for all measurements, the rest of the sample may be discarded The sample transfer can be made directly from the bucket to the bottle. The bucket should be rinsed with deionized/distilled water before reuse.

6.5.3.3 Sequential Samples—When samples are collected through a funnel directly into prenumbered polyethylene bottles, the bottles should be labeled and sealed immediately after the samples are measured.

6.5.4 *Sample Preservation, Storage, and Shipment*

6.5.4.1 Sample Preservation—Sample degradation can occur due to chemical interactions (e.g., with particulates or gases) or to biochemical reactions. Preservation of sample integrity can be maximized by filtration, sealing, and storage in the dark at about 4°C. After pH and conductivity measurements, filtration should be done with a 0.45 um organic membrane filter (10), if inorganic species are to be analyzed. Although biocides (e.g., toluene or chloroform) are effective, they can interfere in the various measurements or analyses (2) and thus must not be added to the sample. If certain species must be preserved, an

aliquot of the sample can be mixed with a preservative in a separate container. Procedures initiated in the field should be continued in the laboratory; however, to minimize contamination, filtrations should be done in the laboratory as soon as possible after sample arrival.

6.5.4.2 Storage—Samples should be stored in a refrigerator after collection After the laboratory analyses have been completed and the results checked, the sample should be transferred to a 125 ml polyethylene bottle to save space and stored in a refrigerator or freezer for a time period of at least six months. Thus the samples are available for further tests or analyses if desired. Availability and location of storage should be recorded in the chain of custody documentation It is not known whether the best method for longterm storage is to freeze the samples or to keep them at 4°C Stability tests for several months indicate that both the 4°C (10,11) and the freezing (11) are satisfactory. Until more evidence is available, 4°C storage is recommended.

6.5.4.3 Shipment—If sampling weekly, ship samples to the laboratory weekly, on a scheduled day and by the method specified in the O & M manual (9). If event or subevent sampling is being performed, ship the sample as soon as possible after collection and measurement; for economic reasons, the samples can be logged in, stored in a refrigerator, and shipped weekly. Generally, the shipment should be made early in the week by air (UPS Blue or air parcel post) so that samples are received in the laboratory before the weekend. Upon arrival, the samples should be logged in and stored in a refrigerator to minimize degradation. Cumulative weekly samples should be shipped with their collecting buckets packed into cardboard cartons or other protective boxes

Event and sequential samples collected for special studies should be kept cold during shipment, and should be shipped in cardboard-enclosed Styrofoam boxes (Polyfoam Packers Corp., Chicago, Ill.) with freeze-gel packs which have been kept in the freezer compartment of a refrigerator for about 24 h before shipping to ensure that they are completely frozen. Gel-type packs are preferred because they are less likely to leak when unfrozen. Generally, four packs per box are sufficient to keep the samples cold for 4 to 5 days. The temperature of the box interior should be measured on arrival at the laboratory. The central laboratory should replace all sample containers and shipping materials weekly.

6.6 Field Measurements

Field measurement procedures for pH, specific conductance, and temperature are discussed in this section Procedures described in the O & M manual (9) should be used in the central laboratory as well as in the field Sample pH and conductivity are measured in both the field and the laboratory to detect sample changes. The field values representing the fresh sample are the true values if no measurement error has occurred A warmup of the meters may be needed before they are used (see manufacturer's instructions) Results of field measurements should be recorded on the Field Data Form (Section 6 8 5).

6.6.1 pH Determination Method

6.6.1.1 General Description—The pH of a solution is related to free-acid activity.

$$pH = -\log H^+ \qquad 6\text{-}1$$

where H^+ is the H^+ activity or free H^+ concentration.

Thus pH does not measure the total acid concentration The pH meter measures the electrical potential difference between a reference electrode and an H^+glass electrode; the glass electrode potential varies with the activity (or effective concentration) of hydrogen ion (H^+) in solution. Although the meter measures electrical potential (volts), it is calibrated to give data as pH.

6.6.1.2 Calibration—Since acid rain samples generally have pH's between 3.0 and 6.0, the pH meter should be calibrated with pH 3.0 and 6.0 standard buffers. For other less acid samples, pH 4.0 and 7.0 buffers should be used. For basic samples, pH 5 0 and 8.0 buffers should be used. Each station should receive the needed calibration buffer solutions from the central laboratory. The stations should notify the laboratory when the buffer supply is nearly exhausted.

The pH 6.0 (or 7.0) buffer is used to adjust the calibration or standardization setting; the slope setting is adjusted against the pH 3.0 (or 4.0) buffer. After the slope has been adjusted, the first setting should be rechecked with the pH 6.0 (or 7.0) buffer; if it has changed by more than ±0.02 pH unit, the calibration should be repeated. For these buffer solutions, a stable reading generally occurs in 30 s to 2 min. Since pH is temperature dependent, calibration buffers and samples should always be measured at the same temperature. Before calibration, unsealed electrodes should be topped off with filling solution (available from the electrode manufacturer), and the exterior should be carefully rinsed with deionized water. During the measurements, the pH electrode should not touch the bottom of the solution vessel. If a metal ring stand is used to hold the electrode, the stand and the pH meter should be connected to the same electrical ground.

The pH meter should be calibrated before and after each measurement or a series of measurements. If the initial and final calibrations have changed by more than 0.02 unit, the measurements must be repeated. If this change reoccurs, a problem exists with the apparatus, and it should be remedied.

6.6.1.3 Sample Analysis—Sample measurement is performed directly after the meter has been calibrated and the electrode washed. Never insert the electrode or any other object into any of the bulk solutions, never pour a solution back into its bulk container; and never measure while the solution is being stirred to eliminate errors due to streaming potentials. For measurements, a small vessel (vial or test tube) should be used. A procedure for sample analysis is in the O & M manual. Precipitation samples usually yield a stable potential in about 4 min. The pH electrodes, after being rinsed in deionized/distilled water, should be stored in deionized water, in 10^{-4}N acid, or in a 74 micromho/cm KCl standard.

6.6.1.4 Quality Control - Accuracy and Precision — The main problem with pH measurements is aging of the electrode; diagnostic tests are presented here. The first test for electrode or procedural problems should be with unknown test samples sent monthly to the field station by the laboratory; these audit samples have pH and conductance values similar to rain, and thus should be measured for both before returning them to the laboratory with the results for recheck and evaluation. If the field pH differs from the laboratory pH by more than ±0.15 unit, the electrode probably needs replacing; laboratory values are assumed to be correct because they are measured on several samples of the unknown and because the electrode is checked with a second backup electrode. Thus the field results are indicators of the accuracy of the pH measurements; if a number of measurements are made, the precision is also obtained and should be better than 0.05 unit If the accuracy and/or precision are poor, consultation with the field operator on technique should confirm the source of the problem, and it should be corrected by the QA coordinator as soon as possible.

A second test for electrode problems should be a reference solution of known pH to learn the precision of the station's measurements. Each site should receive from the central laboratory a polyethylene bottle of electrode reference solution with pH and conductivity similar to those of rain samples, and should check the electrode biweekly. The measurement procedure should be identical to that for rain samples. The solution should be stored in the refrigerator and replaced when needed or when the pH or conductivity appears to have changed. The average value and the standard deviation of a series of at least five test sample measurements taken consecutively and the time required for electrode equilibration can be used to evaluate the electrode performance. The standard deviation (s) is:

$$s = [\Sigma(x_i-\bar{x})^2/(n-1)]^{1/2} \qquad 6\text{-}2$$

where x_i = the measured pH for the ith sample,
x = the average pH reading for the series, and
n = the number of sample tubes measured.

For acceptable electrode behavior, s should not be greater than 0 05 pH unit, and the average pH should agree with the previous month's value within ±0.10 unit. Frequently, the first measurement differs by more than ±0.1 unit from the others, so this value can be excluded from the average for six sample tubes. If this behavior is exhibited by an electrode, it is strongly recommended that two tubes of each precipitation sample be measured for pH and that the second value be entered on the data form. Performance is determined by the time needed to attain a stable reading—when the pH reading becomes constant within ±0.02 unit for 1 min.; the time should be less than 5 min. for a well-behaved electrode. Results of these tests should be guides for the measurement technique and the equilibration time to be used for precipitation sample measurement. If an electrode test at any time exhibits out-of-control behavior (as indicated by the above criteria), the electrode should be replaced. If the average pH value has changed from that of the previous month by more than 0.10 unit, the solution conductivity should be checked. If the conductivity has changed by more than 10% from its original value, the solution has degraded, and should be replaced. Always return enough of the solution so that it can be checked by the laboratory.

6.6.2 *Specific Conductance Determination Method*

6.6.2.1 General Description—The conductivity of a solution is the reciprocal of its resistance, and it is related to the solution temperature and to the total concentration and species of free ions present.

6.6.2.2 Calibration—The conductivity (or resistance) varies with the electrode area and spacing as well as with the temperature and the ion concentration; therefore, the measuring apparatus has to be calibrated to obtain the cell constant or to adjust the meter. For calibration, a KCl solution of known conductivity should be used, and the temperature of the KCl standard and the sample should be the same. For rain samples, a 0.0005M KCl solution with a specific conductance of 74 micromho/cm at 25°C should be used in the calibration with the measurement procedure recommended by the instrument manufacturer All conductances should be reported in micromho/cm or in microSiemen/cm corrected to 25°C. If the apparatus has automatic temperature compensation or if the standard and the unknown are at the same temperature, no temperature corrections are generally necessary if the 25°C KCl value is used for calibration. (Temperature coefficients of the two solutions are assumed comparable.) If the apparatus does not have temperature compensation or if the KCl standard and the unknown are at different temperatures, corrections must be applied; KCl values near 25°C, based on a temperature coefficient of 2% per degree, are in Table 6-2.

The conductivity apparatus should be calibrated before and after each measurement or series of measurements. If a change of more than 5% occurs, the measurements should be repeated; if the drift reoccurs, a problem exists with the apparatus, and it must be corrected. In general, stable values (for minutes) occur in about 30 s.

Table 6-2. *Temperature Specific Conductance of 0.0005M KCl*

T°C	*Micromho/cm*
20	*66.8*
21	*68.2*
22	*69.5*
23	*71.0*
24	*72.4*
25	*73.9*
26	*75.4*
27	*76.9*
28	*78.4*

6.6.2.3 Sample Analysis—Conductivity of the samples can be measured on the same aliquot used for pH; if so, conductivity must be measured before pH to avoid error due to salt contamination from the electrode The conductivity cell should be washed with distilled/deionized water after calibration and rinsed with sample solution The procedure is in the O & M manual (9) If the temperature of the sample is not the same as that of the standard and if the apparatus does not have automatic temperature compensation, the measured conductance should be corrected to 25°C by adding 2%/°C if below 25°C or by subtracting 2%/°C if above 25°C.

6.6.2.4 Quality Control - Accuracy and Precision—Unlike the pH electrode, which has a limited life, the conductivity cell generally has few problems However, in contrast to the pH buffers, which are concentrated and quite stable, the working conductivity standard is a very dilute, 0.0005M KCl, and may either degrade slowly or become contaminated To minimize errors due to changes in the calibration standard, the working 74 micromho/cm solution should be replaced approximately monthly. When a new working standard is received, it should be checked against the old working standard, and the two values should agree within 10%. If they do not, notify the laboratory. Always return enough of the old standard to the central laboratory for it to be remeasured. Never return the old working standard before receiving a new one

Conductivity standards should be sealed and stored in a refrigerator to minimize changes Generally, changes of less than 5% monthly may be ignored; if greater than 5%, the field values can be corrected for the large changes by prorating with time in a linear manner. Such corrections should be duly noted. If the conductivity meter has its own builtin standardization circuit, it can be used to check the KCl standard. If the KCl standard has changed from its original value by more than 5%, the laboratory should be informed. The cells should be stored as recommended by the manufacturer.

Another means of evaluating the working conductivity standard is to use unknown test samples submitted monthly from the laboratory to determine the accuracy and precision of the station's specific conductance measurements. These test samples must be returned to the central laboratory with the next sample shipment for remeasurement to ensure that they have not changed in value. If the laboratory finds that the station's conductivity differs from the laboratory's by more than 10%, the

laboratory should inform the field and quality assurance personnel, and should replace the old conductivity standard.

6.6.3 *Temperature Measurements*

6.6.3.1 General—Each field thermometer and temperature probe should be assigned an identification number so that it will be possible to trace its certification and to document it properly. To minimize any chance of contamination, the probe should be washed and dried before the temperature measurement of a solution, and the probe should never be placed in a solution before pH and conductivity measurements unless there are duplicate vessels for each sample. The probe should be placed only in the solution used for rinsing, not for pH and conductivity determinations.

6.6.3.2 Calibration and Traceability—The central support laboratory should maintain and store an NBS-calibrated thermometer, as a primary standard, and one field thermometer should be certified against this as a secondary standard. All field thermometers or temperature probes should be calibrated against the certified (secondary) thermometer in a circulating water bath in the 0° to 25°C range; the procedure should be similar to that used for certifying the secondary standard. The Thermometer Calibration Log (Section 6.8) should be completed, one copy should be filed in the laboratory, and another should be sent to the field with the temperature probe. If the water bath does not have a cooling coil, an ice-water mixture can be used to achieve the low temperature. Generally, calibration at two temperatures, near 0° and 25°C, is sufficient. Linear temperature behavior may be assumed.

After initial calibration, the temperature behavior probes should be calibrated at least once a year in the laboratory or in the field by using a certified thermometer and two temperatures (i.e., 0°C and ambient).

6.6.4 *Gravimetric Measurements*

6.6.4.1 General—The volume of rain is measured as mass of rain with a density of 1 g/ml. The mass of rain is measured in the field to determine the rain collector efficiency (compared to the rain gauge), and the mass of the sample sent to the laboratory is measured to determine if leakage occurred in shipment.

The field site should have a 20 kg capacity balance for weighing rain buckets; the balance should be in a room free from drafts and on a table that minimizes vibrations; and the legs of the balance should be adjusted to level the balance.

Before each weighing, the balance pan should be brushed off with a soft brush and the balance zeroed. After each weighing, the balance should be cleaned of all (potentially corrosive) chemicals.

Periodic maintenance should be according to the manufacturer's recommendations; factory maintenance is usually once a year, and a record of maintenance should be kept for each balance by completing the Balance Factory Service form (Section 6.8.5).

6.6.4.2 Balance Calibration—Each balance, before being shipped to the field, should be calibrated with NBS traceable weights in the central support laboratory. In the field the balance should be zeroed before each rain sample is weighed. Annually, a full calibration as part of the network evaluation (Section 6.7) should be performed by weighing two NBS traceable weights (1.0 and 5.0 kg) on the field balance. The auditor-recorded actual reference weight, measured weight, and weight difference should be recorded on the Audit Record form (Section 6.8.5).

6.6.4.3 Rain Gauge Calibration—To calibrate the weighing gauge, a set of weights is generally available from the manufacturer. With a dual traverse (0-6 and 6-12 in.) pen recorder such as the Belfort, the range 5-7 in. has been difficult to calibrate and to keep calibrated; this range is generally not needed if the rain gauge bucket can be emptied after each event or week of events. However, antifreeze must be added to the weighing gauge bucket in the winter to melt captured snow, so severe or prolonged storms can bring the gauge to 5-7 in.; accordingly, it is recommended that the bucket be emptied when the 5 in. level is approached before adding new antifreeze.

The tipping bucket gauge is calibrated by using a slow drip technique to add a controlled volume of water. The set screws may need to be adjusted to limit the travel of the tilting bucket.

6.7 Network Evaluation

Establishing a schedule for audits and independent checks to evaluate the quality of data provided by the total measurement system is an important part of an overall QA program. An audit for a precipitation chemistry network should include both qualitive and quantitative evaluations. The quantitative evaluation of precision and accuracy is discussed in Section 9; the remainder of this section discusses a qualitative audit of performance.

6.7.1 *System Audit*

A system audit is an on-site inspection and review of the QA efforts used for monitoring (sample collection, sample analysis, data processing, etc.). The QA project plan (Section 3) should be the basis for a system audit.

For each monitoring network, a system audit should be conducted as soon as possible after the start of monitoring; subsequent system audits should be scheduled at least once per year. About 4 to 6 weeks before the audit, the QA coordinator should send a questionnaire to the field operations manager, and the questionnaire, (Section 6.7.3) should be returned before the auditor's visit to allow the auditor to review and evaluate the recorded information. The system audit should be conducted by (a) interviewing the field manager and the station operators, (b) visiting the monitoring site, and (c) writing a summary report with results, observations, and recommendations

6.7.2 *System Audit Questionnaire*

The system audit questionnaire (provided herein) is in the recommended format, but it can be modified and supplemented to fit the needs of each specific monitoring network. In the questionnaire, the R & G denote "recommended strongly" and "guideline", respectively

Field Agency Questionnaire

Forms

General Information .....
Precipitation Monitoring Resources/Staff Size, Organization, Qualification and Utilization .....
Precipitation Monitoring Resources/Staff Training .....
Precipitation Monitoring Resources/Equipment .....
Precipitation Monitoring Resources/Facilities .....
Monitoring Network/Network Design .....
Monitor Network/Network Status .....
Monitor Network/Network Operation .....
Monitor Network/Network Maintenance .....
Monitor Network/Network Calibration .....
Quality Assurance: Data Quality Assessment Requirements/General .....
Quality Assurance: Data Quality Assessment Requirements/Methods .....
Quality Assurance: Data Quality Assessment Requirements/ Required Calculations For Data Quality Assessment .....
Data Handling and Reduction/General .....

General Information

Questionnaire completion date. _____
Survey visit date: _____
Agency name and address.

_____

_____

_____

Agency mailing address (if different from above)

_____

_____

_____

Telephone number FTS: _____ *Commercial:( )* _____

Agency Director: _____

Monitoring Supervisor. _____

Quality Assurance Coordinator: _____

Survey Conducted by: _____

Affiliation of Auditor: _____

_____

_____

Persons present during entrance interview:

_____

_____

Persons present during exit interview:

_____

_____

Precipitation Monitoring Resources

A. Staff Size, Organization, Qualifications and Utilization

		Yes	No	Comments
1. Provide a current organizational chart showing precipitation monitoring and data handling personnel.	( )			
2. Are the following items adequate to demonstrate that the equipment can be operated, calibrated and maintained:				
a. Staff size?	(R)			
b. Program organization?	(R)			
c. Staff qualifications?	(R)			
d. Staff utilization?	(R)			

B. Staff Training

1. Do staff members receive periodic training to upgrade employee's skills?	(G)			
a. At least once a year?	(G)			
2. Are the manufacturer instrument manuals, and quality assurance guideline documents for precipitation monitoring available to the operators?	(R)			
3. Are the following references available?				
a. Atmospheric Environment	(G)			
b. Journal of the Air Pollution Control Association	(G)			
c. Environmental Science and Technology	(G)			

Precipitation Monitoring Resources

C. Equipment

		Yes	No	Comments
1. Does the agency have the necessary hand tools, electrical testing, and calibration weights to operate, and maintain the instruments, to calibrate the rain gauges and assure the data quality in the network?	(R)			
2. Are the following types of equipment available or on hand?				
a. Hand tools-screwdrivers, wrenches, etc.	(G)			
b. Multimeter b_1 analog	(G)			
b_2 digital	(G)			
c. Soldering iron, gun, and accessories	(G)			
d. Electric drill, saws, etc.	(G)			
e. Tubing cutters and accessories	(G)			
3. For precipitation collection are the following types of equipment used?				
a. Automatic precipitation collectors	(R)			
b. Recording rain gauge sensitive to 0.01 in (0.25 mm).	(R)			
c. Meteorological gear:				
(1) wind speed	(G)			
(2) wind direction	(G)			
4. Are the means to calibrate the rain gauges available?	(R)			

D. Facilities

1. Is adequate space available to operate and maintain the network?	(R)			
2. Is the work space used for the sample measurements maintained at 25°C ±5°C?	(R)			
3. Are the instruments operated at a normal line voltage between 105 and 125V?	(G)			

Monitoring Network

A. Network Design

		Yes	No	Comments
1. Is the network designed in accordance with the program objective?	(R)			
a. Is there a written plan describing the network prescribing:				
(1) The basis for design of the network, selection of instruments and siting?	(R)			
(2) The locations of the instruments (site locations) by UTM?	(R)			
(3) The sampling schedules?	(R)			
(4) The methods of sampling and analysis?	(R)			
(5) The method of data handling and analysis procedures?	(R)			
b. Have the site description questionnaires been submitted?	(R)			
2. Are instruments installed at a site in accordance with:				
a. Manufacturer's specifications?	(R)			
b. EPA guidelines?	(R)			
c. Sound scientific principles?	(R)			
3. At the sites:				
a. Are there any obstacles the height of which subtends an angle greater than 30°?	(R)			
b. Are the precipitation collector and rain gauge at least 10 feet apart?	(R)			
c. Are the rain gauge and collector placed in a line perpendicular to the prevailing winds?	(G)			
d. Is the rain gauge level?	(R)			
e. Is the access door of the rain gauge on the leeward side of the wind path?	(G)			
f. Can the rain gauge measure 0.01 inches of precipitation?	(R)			

Monitoring Network

A. Network Design

		Yes	No	Comments
4. Does network design consider:				
a. Access?	*(R)*			
b. Power availability?	*(R)*			
c. Localized interferences?	*(R)*			
5. Is the precipitation fall to the sites unobstructed?	*(R)*			
6. Are sites located in accordance with current EPA site location criteria and ambient precipitation monitoring siting guidelines?	*(R)*			
7. a. Does each site have a written identifying purpose?	*(R)*			
b. Are the samplers located at the optimum site to meet the purpose?	*(R)*			

B. Network Status

1. Does the agency have the following records identifying the history and status of each monitoring site?	*(R)*			
a. Completed site identification form?	*(R)*			
b. Photographs or slides. One photograph or slide toward each of the four compass directions and one closeup photograph of the instrumentation at the site?	*(R)*			
c. Date site was started up and date site was shut down, as appropriate?	*(R)*			
d. Model, manufacturer and serial number of instruments at the site and dates each instrument operate?	*(R)*			
e. Reasons for periods of missing date?	*(R)*			

C. Network Operation

1. Are the instruments in the network operated in strict accordance with the agency's written Standard Operating Procedures?	*(R)*			

Monitor Network

C Network Operation

		Yes	No	Comments
2. Are these procedures compatible with:				
a. The Federal reference or equivalent method if available?	(R)			
b. The manufacturer's instruction manual?	(R)			
c. The Agency Quality Assurance plan?	(R)			
3. Is a formal schedule used for operating the instruments? (Attach a copy of the schedule.)	(R)			
4. Does the agency maintain an adequate supply of expendables necessary to service the instruments?	(G)			
5. Precipitation samples are picked up:				
a. Every 24 hours?	(G)			
b. Every 7 days?	(G)			
c. Other (specify)_____hours	(G)			
6. In the winter:				
a. Are the necessary precautions taken with the rain gauge (antifreeze, funnel removal, heater)?	(R)			
b. Are precautions taken with the collector (boots for lid arms, seal removal)?	(G)			

D. Network Maintenance

1. Is preventive maintenance performed in strict accordance with the agency's Standard Operating Procedure?	(R)			
2. Is a formal written schedule used for performing preventive maintenance on the instruments? (Attach a copy.)	(R)			
3. Does the agency have access to a qualified instrument repairman?	(R)			
a. Is it a staff position?	(R)			
b. Is it a manufacturer's serviceman?	(R)			
c. Does the agency have a service contract on any instruments? (Specify on back of this page.)	(R)			
4. Are the recommended spare parts adequate and available to maintain instrument downtime?	(G)			
5. Are sample buckets, containers and lids kept clean?	(R)			
6. Is the collector sensor cleaned periodically?	(R)			

Monitor Network

D. Network Maintenance

		Yes	No	Comments
7. Is the collector rim of the dry bucket wiped clean with Kimwipes weekly?	(G)			
8. Is the rain sensor tested at every site visit?	(R)			
9. Is the collector dry bucket inspected for moisture whenever a sample is removed?	(R)			
10. Are the rain gauge pens checked for ink weekly?	(G)			
11. Is the rain gauge clock wound at the prescribed intervals?	(R)			
12. Is the time clock on the rain gauge recorder accurate (to ½ hr/week)?	(G)			
13. If not, is it corrected weekly?	(R)			

E. Network Calibration

1. a. Does the agency conduct frequent rain gauge, pH and conductivity apparatus calibrations?	(R)			
b. Is the frequency adequate to demonstrate the accuracy, precision, and completeness for all data submitted?	(R)			
c. Are the rain gauges calibrated:				
(1) Upon installation?	(R)			
(2) On a semi-annual basis?	(R)			
(3) When major maintenance is performed?	(R)			
(4) Before removal from operation?	(R)			
(5) When the daily service and periodic audits fail to meet the prescribed performance specifications?	(R)			
d. Are new calibration or standard solutions for pH and conductivity checked against the old ones?	(R)			
e. Is there a statistically significant quantity of calibration data routinely generated to determine the accuracy and precision, at the 95% confidence level, of all data?	(R)			
2. Is the conductivity working standard replaced monthly?	(R)			

Monitor Network

E. Network Calibration

		Yes	No	Comments
3. Does the agency own or have access to calibration capability for each:				
a. Rain gauge	(R)			
b. Recorder	(R)			
c. pH and conductivity apparatus	(R)			
4. a. Do all calibration standards purchased have a maximum analytical error of ±2%?	(R)			
b. Is the accuracy of all calibration standards specified and documented?	(R)			
5. Are all instruments calibrated under the same conditions as they are operated?	(R)			
6. Are instruments calibrated at the same site as they are operated?	(R)			
7. Are the pH and conductivity meters calibrated daily before sample measurement?	(R)			
8. Are records kept documenting all				
a. Audits?	(R)			
b. Calibrations per	(R)			

Quality Assurance: Data Quality Assessment Requirements

A. General

		Yes	No	Comments
1 Are data quality "reporting organizations" properly defined?	(R)			
a. Is operation by common team of field operators?	(G)			
b. Does organization have common calibration facilities?	(G)			
c. Is organization supported by a common laboratory or headquarters?	(R)			
2. Does the agency have a formal quality assurance program, developed and implemented, as evidenced by a written plan?	(R)			
3. Are confidence limits assigned to all data collected?	(R)			
4. Are all the data submitted documented to show that they are acceptable?	(R)			
5. Have written Standard Operating Procedures been developed and implemented for each routine task performed; i.e. operation, maintenance, calibration, etc.?	(R)			
6. Are all quality assurance data documented and available for inspection?	(R)			
7. Does the agency have a quality assurance coordinator to insure that a maximum quantity and quality are generated?	(R)			
8. Does the agency participate in the EPA quality assurance audit program?	(R)			
9. Is the chain of custody maintained on all samples?	(R)			
10. Is complete traceability maintained on all data?	(R)			
11. Does the agency maintain sufficient quality assurance information related to data collection and analysis to demonstrate that the data are acceptable?	(R)			

Quality Assurance: Data Quality Assessment Requirements

B. Methods

		Yes	No	Comments
1. Is a one point (minimal) check on the rain gauge performed monthly?	(R)			
2. Is the balance zeroed before each weighing?	(R)			
3. Is the outside of the wet bucket wiped dry before weighing?	(G)			
4. Does the pH electrode have an identification number?	(G)			
5. Is the pH electrode stored in the proper pH buffer?	(R)			
6. Is the pH electrode rinsed well with distilled/deionized water after removal from the buffer?	(R)			
7. Are the samples allowed to come to room temperature before they are measured for pH and conductivity?	(R)			
8. For the pH measurement is 4 M KCl added to the sample aliquot to yield a 0.04 M solution?	(R)			
9. Are the sample aliquots measured for pH and conductivity discarded after measurement?	(R)			
10. Is the electrode test run monthly?	(G)			
11. Are the electrode test results submitted to the laboratory?	(R)			
12. Are the conductivity standards and electrode test solution refrigerated?	(G)			
13. Is the conductivity of the rinse water measured and recorded?	(R)			
14. Are the data properly recorded in a log book and on the data?	(R)			
a. Are the container labels made out in pencil or indelible ink?	(R)			
b. Are the samples sealed securely before shipment?	(R)			
c. Are shipments made on the prescribed schedule?	(R)			
15. Are the stations audited semi-annually?	(R)			
16. As a check on precision, have at least two pairs of collocated samplers been operated during the calendar quarter?	(R)			
17. Do the sites meet the Class A requirements?	(R)			
18. Are calibration, sampling, & analysis the same for collocated samplers?	(R)			

C. Required Calculations for Data Quality Assessment

1. Are the average deviations of the pH electrode from the test solution calculated monthly?	(R)			
2. Have the following quality assurance reporting requirements been met? (Ask to see copy of a typical report.)				
a. A list of all monitoring sites and their identification codes in each reporting organization (Regional Office and EPA-EMSL/RTP)?	( )			
b. Changes in assignments of monitoring site (Region and EPA/EMSL)?	( )			
c. Quarterly reports?	( )			
d. Quality assurance portions of the annual report?	( )			

Data Handling and Reduction

A. General

		Yes	No	Comments
1. *Have standard data forms (bound or loose) been developed and implemented to document the results as contained in the Standard Operating Procedures?*	(R)			
2. *Do the standard data forms document complete data traceability?*	(R)			
3. *Are all standard data forms completed, dated, and signed by the person performing the task?*	(R)			
4. *Are the station data record sheets for each sample made out in duplicate?*	(R)			
5. *Is one copy of the data sheet sent with each sample?*	(R)			
6. *Is the rain gauge chart sent weekly with the samples?*	(R)			
7. *Is a log book maintained?*	(R)			
8. *Are problems, equipment changes, new standards, new operators, etc. documented in the log book and reported to the central laboratory?*	(R)			
9. *Is the sample container labelled with station identification, weight, date, sample number?*	(R)			
10. *Are duplicate or sequential samples identified properly?*	(R)			
11. *Do standard data forms show a complete chain of custody and traceability for all data from generation to submission to the data bank?*	(R)			

6.7.3 *Auditor Site Visit*

The site visitation should cover all aspects of site operation, so the auditor can evaluate the operator's overall capabilities The auditor should bring a test sample and add it to a clean bucket at the station; observe the operator's weighing and measurements of its pH and conductivity; record the data on the Audit Record form (Section 6.8.5); watch the operator transfer the sample back to the test sample bottle, rinse the bucket, and test the rinse water conductivity to ensure that the bucket is clean; and finally inspect all the equipment, calibrate the rain gauge, offer advice, and ask questions while the operator goes through his rounds and tests. If there are any problems, the auditor must attempt to correct them or bring them to the attention of the field manager.

6.8 Documentation

All data, observations, changes, or modifications must be dated and documented on data forms and/or in logbooks in triplicate and duplicate, respectively (carbon paper may be used) One copy of each should be kept in the station records, and another shipped with the sample, the third copy (the data form) should be mailed separately from the sample to the laboratory to help trace a missing sample.

6.8.1 *Logbook*

A bound notebook with perforated pages that can be easily torn out should be used All problems and actions, dates and times of visits, equipment changes, procedural changes, or modifications, standard solution changes, electrode replacement, operator changes, and so forth should be recorded in the logbook, and a copy should be sent to the central laboratory

6.8.2 *Rain Gauge Chart*

The rain gauge charts, marked with station identification, date and notations for tests, problems, and so forth should be submitted weekly to the central laboratory.

6.8.3 *Field Data Form*

Field Data forms should contain all information required for identification of the sample—station, date, weight, sampling times, pH, conductivity, problems, and supply orders. Triplicate forms should be made out for each sample.

A sample of a data form used by NADP for event sampling is in Section 6.8.5. Instructions for filling out the form are in the O & M manual(9). Under item 11 (Remarks) should be included unusual occurrences—plowing, harvesting, burning, increased atmospheric pollution or dust, and so forth—and any other information, comments, or observations—power outage, smell, moisture in the dry bucket, new electrode, new conductance cell or standard.

The importance of the information requested in item 11 cannot be overemphasized. Careful observations of the sample and the occurrences in the surrounding environment can aid in evaluating the validity of the sample and the collected data.

6.8.4 *Sample Identification*

Samples must be labeled so that they can be readily and correctly matched with their data forms The label should contain station, date, and sample weight marked with a pencil or a ball point pen so that it is legible if it gets wet.

For duplicate (collocated) samplers or sequential samplers, each sample container should be coded and logged in separately so they can be easily identified in the data base. The station can distinguish between duplicate samples by adding a -1 and -2 in the site number space on the data form; for sequential samples, add -11, -12, -13, and so forth to denote chronological order of collection for each event.

6.8.5 *Data Forms*

For the convenience of the manual user, blank data forms are listed and then provided on the following pages; many of these were adapted from EPA and other forms. No documentation is on these forms The titles are at the top, as customary for a data form. To relate the form to the text, a nur .ber is in the lower right-hand corne —for example, 1 1/6.3.2 indicates form 1/version 1 as discussed in Section 6.3.2. A revision of the form may be documented with 1 2/6.3.2, form 1/version 2 and so forth.

Form Number	*Title*
1.1/6.3 2	*Conductivity Meter/Cell Acceptance Test Form*
2 1/6.3.2	*Conductivity Test Summary Form*
3.1/6.3 2	*pH Meter/Electrode Acceptance Test Form*
4.1/6.3.2	*pH Acceptance Test Summary Form*
5.1/6.6.4	*Balance Factory Service Form*
6.1/6.6.4	*Thermometer Calibration Log*
7.1/6.7.2	*Audit Record Form*
8.1/6.8.3	*Field Data Form*

6.9 References

1. Galloway, J.N., and G.E. Likens, Water, Air and Soil Pollut. *6*, 241 (1976).
2. Galloway, J.N , and G.E. Likens Tellus *30*, 71 (1978)
3. Cooper, Jr , H.B H., J.A. Lopez, an J.M. Demo, Water, Air Soil Pollut *6*, 351 (1976).
4. Gatz, D.F., R.F. Selman, R.K Langs, and R.B. Holtzman, J. Appl Meteorol. 10, 341 (1971).
5. Morgan, J.J., and H.M. Liljestrand The Measurement and Interpreta tion of Acid Rainfall in the Lo Angeles Basin, California Institut of Technology Report, No. AC-2 80, February 20, 1980.
6. Robertson, J.K., T.W. Dolzine an R.C. Graham, Chemistry and Pre cipitation from Sequentially Sam pled Storms, EPA report to b published.
7. Raynor, G.S., and J.P. McNeil, Th Brookhaven Automatic Sequentia Precipitation Sampler, BNL-50818 Brookhaven National Laboratory January 1978; Atmos. Environ *13*,149 (1979).
8. P.B.S.K. Associates, P.O. Box 131 State College, PA. 16801, Bulletir 177.6801.
9. *Operations and Maintenance Man ual for Precipitation Measure ment Systems,* U.S. Environ mental Protection Agency, Re search Triangle Park, N.C., (ir press).
10. Peden, M.E., and L.M. Skowron Atmos. Environ. *12,* 2343 (1978).
11. Rothert, J.E., Battelle Pacifi Northwest Laboratories, Richland Washington, MAP3S Program telephone communication.

Conductivity Meter/Cell Acceptance Test Form

Date of Test: _____ _____

(Analyst Signature)

Preparation date of a 0.0003 M KCl reference solution: _____

Meter type/serial no. _____/_____

Conductivity cell type/serial no. _____/_____

Indicate whether test of _____ *meter or* _____ *cell*

Conductivity Values Obtained:

Aliquot 1:	_____	*Aliquot 6:*	_____
Aliquot 2:	_____	*Aliquot 7:*	_____
Aliquot 3:	_____	*Aliquot 8:*	_____
Aliquot 4:	_____	*Aliquot 9:*	_____
Aliquot 5:	_____	*Aliquot 10:*	_____

Test Solution

Average conductivity
± standard deviation: _____ = _____

Accepted _____ *Rejected* _____

Conductivity Acceptance Test Summary Form

Meter Type/ Serial #	*Cell Type/Serial#*	*Date of Ref Soln Prep.*	*Date of Check*	*Conductivity Value Average ± Standard Deviation (umho/cm)*	*Number of Values*	*Analyst Initials*

pH Meter/Electrode Acceptance Test Form

Date of Test: _____ _____

(Analyst Signature)

Preparation date of pH electrode reference solution: _____

Meter type/serial no. _____/_____

pH electrode type/serial No. _____/_____

Indicate whether test of _____ *meter or* _____ *electrode*

pH Values Obtained:

4.0 (3.0) Buffer before:	_____	*Aliquot 6:*	_____
7.0 (6.0) Buffer before:	_____	*Aliquot 7:*	_____
Aliquot 1:	_____	*Aliquot 8:*	_____
Aliquot 2:	_____	*Aliquot 9:*	_____
Aliquot 3:	_____	*Aliquot 10:*	_____
Aliquot 4:	_____	*4.0 (3.0) Buffer after:*	_____
Aliquot 5:	_____	*7.0 (6.0) Buffer after:*	_____

pH Electrode Test Solution

Average pH ± standard deviation: _____ ± _____

Accepted _____ *Rejected* _____

pH Acceptance Test Summary Form

Meter Type/ Serial #	*Electrode Type/ Serial #*	*Date of Ref. Soln. Prep.*	*Date of Check*	*pH Value Average ±Standard Deviation*	*Number of Values*	*Analyst Initials*

Balance Factory Service Form

Balance Identification Number	*Date of Factory Service*	*Name of Factory Service Representative*	*Date Next Service Due*

Thermometer Calibration Log

Date	Therm. Serial #	Temperature #1		Temperature #2		Temperature #3		Slope[a]	Intercept[a]	Anal. Init.
		NBS Value	Lab Value	NBS Value	Lab Value	NBS Value	Lab Value			

Audit Record Sheet

Site Identification:

Operator.

Date:

Auditor:

*Audit Sample No.*_____

Lab Anal. Before		*Field Anal.*		*Lab Anal. After*	
pH	*Cond*	*pH*	*Cond*	*pH*	*Cond*

Difference Between Initial and Final Lab Values:

pH = *Cond =*

Difference Between Lab and Field Values:

pH	*Cond*
initial final	*initial final*

Comments:

Field Data Form

CAL/NREL USE ONLY			
BULK		LD	
DA		ND	
QA		NN	
NS/Exclude		S	

1 Station
Name _____
ID . [ ][ ][ ][ ][ ][ ]

2 Observer
Initials [ ][ ][ ]
Signature _____

3 Sample Bucket
Check One [ ] Dry Side [ ] Wet Side

4 Bucket On — Date: Mo [ ][ ] Day [ ][ ] Yr [ ][ ] — Time: 0000 - 2400 [ ][ ][ ][ ]

Bucket Off — Date: Mo [ ][ ] Day [ ][ ] Yr [ ][ ] — Time: 0000 - 2400 [ ][ ][ ][ ]

Circle Time Zone

EDT (-1)	MST/PDT (2)	AKST MST (5)
EST/CDT (0)	PST (3)	American (6)
CST/MDT (1)	AKDT (4)	Samoa

5 Site Operations — Check Yes or No for each item for wet-side samples only if No, explain in remarks

YES	NO	
2	1	1 Collector appears to have operated properly and sampled all precipitation events during entire sampling period
2	1	2 Rain gauge appears to have operated properly during the week
2	1	3 Collector opened and closed at least once during the week

6 Sample Condition — Complete for all samples containing precipitation

2	1	1 Bird Droppings
2	1	2 Cloudy or Discolored
2	1	3 Lots of Soot or Dirt

Describe all else in remarks

7 Sample Weight - Grams
Only for Buckets with water ice, or snow

[ ][ ][ ][ ][ ][ ]● [ ] Bucket & Sample & Lid
− [ ][ ][ ][ ][ ][ ]● [ ] Bucket & Lid
= [ ][ ][ ][ ][ ][ ]● [ ] Sample weight

8 Precipitation Record
For wet-side samples only
Type
Circle one for each day of precipitation
Amount In inches or circle one

R-Rain only, s-Snow only, m-Mixture, u-Unknown, z-zero, t-Trace, mm-Missing

Bucket On To Bucket Off

Tues	Wed	Thur	Fri	Sat	Sun	Mon	Tues
R S M U	R S M U	R S M U	R S M U	R S M U	R S M U	R S M U	R S M U
●	●	●	●	●	●	●	●
Z T MM	Z T MM	Z T MM	Z T MM	Z T MM	Z T MM	Z T MM	Z T MM

Total sampling period precipitation from rain gauge [ ][ ]●[ ][ ] inches
Total precipitation from sampler = sample weight x 0 00058 [ ][ ]●[ ][ ] inches
inches/gram

9 Sample Chemistry
Only for wet-side buckets with precipitation

Mo [ ][ ] Day [ ][ ]

Aliquot Removed [ ][ ][ ]

Conductance [ ][ ]●[ ] µS/um
Distilled water

7 5 ● 0 ÷ [ ][ ][ ][ ]●[ ] = [ ]●[ ][ ]
Standard Certified Standard Measured Correction Factor

[ ][ ]●[ ] × [ ][ ][ ][ ]●[ ] = [ ][ ][ ][ ]●[ ]
Correction Factor Sample Measured Sample Corrected

pH
[ ][ ]●[ ][ ]
pH 4 Observed
[ ][ ]●[ ][ ]
Sample

10 Supplies
Circle if needed
pH 4
pH 7
75 µS/cm
Field Forms

11 Remarks
For example· Contamination by operator, equipment malfunction, harvesting in area

7.0 Laboratory Operations

Quality data generated by an analytical laboratory requires detailed information on needed equipment, control of instrument performance, and a formal QC program.

7.1 Facilities

Minimum facilities which must be available to laboratories analyzing rainwater samples include adequate benchspace, lighting, electrical power, temperature control, compressed gases, exhaust hoods, reagent storage space, refrigerated sample storage, glassware, analytical equipment, and an area for washing glassware (1).

7.1.1 *Benchspace*

Benchspace should be adequate for equipment, and should allow each analyst a minimum of 4 ft^2 for preparation of reagents. A minimum of 8 ft^2 each is needed for the atomic absorption spectrophotometer, ion chromatograph, and automated colorimeter system; 4 ft^2 each is needed for the analytical balance, pH meter, and conductivity meter Bench tops should be 36 to 38 in. above the floor.

7.1.2 *Lighting*

Lighting should be sufficient for easy reading of glassware gradations, balance verniers, and other measuring lines. It is recommended that the lighting of benchtops be at least 100 footcandles.

7.1.3 *Electrical*

The electrical system should provide both 115 v and 230 v, and should have the capacity to accommodate the wattage requirements of all the electrical devices in the laboratory Voltage must be stable to protect instrument components and to avoid instrumental response changes. Most modern instruments have builtin voltage regulators, so that the only requirement of the voltage source is that "spikes" greater than ±10% do not exist; if necessary, voltage regulators can be readily obtained. All electrical equipment should be carefully grounded, preferably using three-pronged plugs.

7.1.4 *Laboratory Temperature*

The laboratory temperature should be maintained at 22±3°C, without excessive drafts or temperature changes. It is especially important to isolate the ion chromatograph, which has a conductivity detector, from drafts and temperature fluctuations. Dilute solutions have conductivity temperature coefficients of approximately 2%/°C.

7.1.5 *Compressed Gases*

Compressed gases are needed for the ion chromatograph and for atomic absorption analyzers. Compressed air for the ion chromatograph provides a constant 80 psi to the pneumatically actuated valves; any inert gas is acceptable, and purity is not critical although particulates should not be present

Since gases used for atomic absorption spectroscopy eventually pass the light path of the atomic absorption detection system, standards of quality must be met. For the analysis of calcium, magnesium, sodium, and potassium, acetylene is the fuel for the atomic absorption burner and air is used as the oxidant; both gases should be free of oil, water droplets, and particulates. A filter in the line will remove these impurities.

Air flow to the atomic absorption burner is approximately 20 liter/min; a standard #1 air cylinder lasts about 5 h at this rate. If a cylinder is used, it should be compressed air, not "breathing" air or any other type. Instead of cylinder air if a compressor is used, the flow should be at least 30 liter/min. at 40 psi. A surge tank will help provide a smooth flow.

Acetylene for atomic absorption is burned at 5 liter/min. when air is the oxidant; at this rate, a standard sized 1B cylinder will last about 30 h. Acetylene in cylinders is dissolved in acetone, and the ratio of acetone vapor to acetylene vapor changes as the acetylene is depleted. Because atomic absorption of some elements is affected by this ratio, it is good practice to renew acetylene cylinders when the pressure is below 100 psi.

7.1.6 *Exhaust Vent for Atomic Absorption Burner Gases*

An exhaust vent is necessary to protect personnel from toxic vapors, to minimize the effects of room drafts on the flame, and to protect the atomic absorption instrument from corrosive vapors. The venting system should provide a flow of 5400 to 8400 liter/min. The vent system has an "inverted funnel" intake over the burner, tubing to the blower intake, the blower itself, and tubing from the blower exhaust. Stainless steel sheets and flexible stainless steel tubing are recommended for construction of the vent system. All connections should be made with screws or rivets because temperatures up to 310°C may occur at the inlet. Atomic absorption instrument manufacturers provide details of construction for vent systems.

7.1.7 *Exhaust Hood*

Acids are used to stabilize samples for metal analysis and to wash glassware and plasticware. It is recommended that these operations be done in an exhaust hood. The air flow through the hood should achieve a linear face velocity of 100 ft/min with the sash fully open.

7.1.8 *Vacuum*

Rainwater samples are filtered to remove particulates. Vacuum or inert gas pressure filtration should be used to minimize the time of exposure of the sample to laboratory air and dust.

7.1.9 *Sink*

A sink with both hot and cold water should be provided for washing glassware and plasticware. An area (about 16 ft^2) should be provided for air drying glassware and plasticware.

7.1.10 *Storage Space*

Adequate shelf space should be available for storing reagents, glassware, and plasticware. Closed cabinets are preferred to minimize chances of dust settling in containers.

7.1.11 *Distilled or Deionized Water*

Distilled or deionized water is used in an analytical laboratory to prepare reagents, to make dilutions, and to rinse glassware and plasticware. Table 7-1 offers criteria for water purity (2,3).

Water having a conductivity less than 1.0 micromho/cm (resistivity greater than 1.0 megohm/cm) is acceptable for analysis of major constituents in rainwater. In the past, high purity has been obtained by distilling water; however, distillation systems have several drawbacks. Even water double or triple distilled contains easily detectable impurities (3). Stills require periodic shutdown and careful cleaning and water production is relatively low.

Ion exchange systems, on the other hand, provide high quality water, are relatively maintenance free, and provide water on demand. The only maintenance required is to change cartridges periodically. It is preferable to pretreat the feed water with a reverse osmosis system to remove a high percentage of ionic impurities and to prolong the life of

the ion exchange beds. In the last stage of treatment, a 0 2-micron filter should be used to remove microorganisms and particles. A meter to monitor the conductivity of the water should be installed inline directly before the spigot, and the system should be checked if the conductivity becomes greater than 1.0 micromho/cm. If trace organics are to be determined, an activated charcoal filter should also be used for purification

Water treatment equipment can be leased from companies such as Culligan; complete systems, such as those listed in Table 7-2, can be purchased.

High-purity water should be purchased in polyethylene bottles except when organics are to be analyzed; then the storage container should be glass High-purity water should be periodically checked with a conductivity meter independent of the inline meter. If the laboratory conductivity meter is calibrated (Section 6.3), the conductivity of the laboratory deionized water should be checked with each set of rainwater samples analyzed.

7.1.12 *Equipment*

Major equipment needs for rainwater analysis include an analytical balance, a pH meter, a conductivity meter, an atomic absorption spectrophotometer, an ion chromatograph, and an automated colorimetric system. In addition the laboratory should have a desiccator, a drying oven that heats to 200°C, an autoclave capable of maintaining 121±0.5°C, an NBS-certified thermometer, a thermometer which can be calibrated against the NBS-certified thermometer, a set of Class-S weights, and other weights which can be calibrated against the Class-S weights.

7.2 Analytical Reagents

7.2.1 *Reagent Quality*

Reagents used for analyses must meet standards of quality denoted by the terms "analytical reagent grade," "reagent grade," and "ACS analytical reagent grade." All of these grades are equivalent, and they identify reagents which conform to current specifications of the Committee on Analytical Reagents of the American Chemical Society (4).

It may not be possible to obtain dyes of analytical reagent grade for automated colorimetric ammonium and phosphate For these, a statement of purity should be obtained from the manufacturer and, if necessary, the weights of dye used in reagent preparation should be adjusted. The lanthanum nitrate used as a flame buffer in atomic absorption should be "atomic absorption grade."

7.2.2 *Drying of Reagents*

Hydrated salts should be stored in a desiccator overnight before weighing. Anhydrous reagent chemicals should be dried overnight in an oven at 105° to 110°C, allowed to cool in a desiccator, and promptly weighed before dissolution

7.2.3 *Traceability to NBS*

Traceability to NBS is usually provided by analysis of an NBS standard reference material (SRM). As of May 1980, NBS had not provided a rainwater SRM, so the only way to obtain NBS traceability is to reference calibration standards to NBS-SRM's. Table 7-3 lists NBS SRM's applicable to rainwater. These materials may be ordered from NBS.

Office of Standard Reference Materials
Room B311, Chemistry Building
National Bureau of Standards
Washington, D C. 20234
Telephone: 301/921-2045

This NBS traceability information is provided mainly as a service. Laboratories are not required to trace all calibration standards to NBS. Calibration standards and independently prepared "analyst spikes" should be prepared from ACS reagent grade chemicals. When a new stock calibration standard is prepared, it should be checked against the old standard.

7.2.4 *Storage of Reagents and Reagent Solutions*

Analytical reagents have a finite shelf life, so all chemicals received by the laboratory should be dated by the receipt clerk and labeled "Do not use after . . ." Shelf lives of chemicals vary with manufacturer, so the manufacturer should be consulted. Unless otherwise specified by the manufacturer, inorganic chemicals have a shelf life of 5 yr at room temperature. The analyst should become familiar with publications (5,6) related to preparation, standardization, and storage of reagents.

Concentrations of reagents in solution may change due to: (1) biological action, (2) chemical reaction (e g., oxidation), (3) evaporation, and (4) adsorption-desorption phenomena on solution container surfaces. All of these effects can be slowed by refrigeration Guidelines for reagent storage are in applicable analytical methods and in the publications (5,6,7) noted above As discussed below (Section 7.3), polyethylene or Teflon bottles are the preferred storage vessels for all reagents for inorganic analyses. Chemically resistant borosilicate glass such as Kimax or Pyrex are acceptable for storage except for reagents to be used for alkali and alkaline earth metal analyses.

7.3 Glassware and Plasticware

This section discusses recommended types of and cleaning procedures for glassware and plasticware, and Federal specifications for volumetric glassware.

7.3.1 *Choice of Vessels for Preparation and Storage of Reagents and Samples*

Potential problems include: (1) contamination of the solution by leaching of species from container surfaces, (2) loss of species from solution due to adsorption on container walls, and (3) breakage of containers. The second is most important for trace metal analysis, which is not addressed in this document; several plastic materials are acceptable for containers to be used in trace metal analysis if the solution is acid stabilized. To minimize the other two problems, plastic vessels should be used when possible. Most laboratory vessels are available in plastic.

The type of plastic depends on the application. A recent article(7) dis-

Table 7-1. *Water Purity*

Degree of Purity	*Maximum Conductivity (micromho/cm)*	*Approximate Concentration of Electrolyte (mg/l)*
Pure	*10*	*2-5*
Very Pure	*1*	*0.2-0.5*
Ultrapure	*0.1*	*0.01-0.02*
Theoretically Pure	*0.055*	*0.00*

Table 7.2. *Commercially Available Water Purification Systems*

Manufacturer	*Reverse Osmosis System*	*Ion Exchange System*
Barnstead	*RO pure*	*NANO pure*
Culligan		
Millipore	*Milli-RO*	*Milli-Q, Super-Q*

cusses trace contamination, durability, and recommended used and cleaning procedures for plastics. Polystyrene (PS), Teflon (TFE) and conventional or low-density polyethylene (CPE) were found to be the cleanest plastics, presumably due to the relatively simple manufacturing processes. Polypropylene (PP) and linear polyethylene (LPE) were much more contaminated. The Teflon CPE and FEP fluorocarbon resins were recommended because they are relatively clean chemically resistant tough materials suitable for field applications. Plastics such as LPE are acceptable for major constituent analysis of rainwater.

All glassware used in the laboratory should be borosilicate, and should be thoroughly cleaned as detailed in the O & M manual(8).

7.3.2 *Volumetric Glassware*

All glassware calibrated to contain (TC) or to deliver (TD)—a precise measure of volume—must meet the NBS specifications for Class A volumetrics(9, 10), as given in Table 7-4. The volume of solution and the internal volume of the glass container itself change with temperature. The temperature (usually 20°C) at which the volumetric glassware was calibrated is indicated on the glassware, solutions should be ±5°C of the calibration temperature for accurate volume measurements

Disposable glassware (e.g , Pasteur pipets; culture tubes) should not be used because they may be of questionable cleanliness and because sodium may readily leach from the soft glass used in the manufacture of such disposable items.

Disposable plasticware (e.g., polypropylene test tubes) may be used, but they should be thoroughly cleaned before use.

7.3.3 *Cleaning of Glassware and Plasticware*

Glassware and plasticware include the borosilicate volumetrics, test tubes, and flasks and the polyethylene containers All should be rigorously cleaned, segregated, and dedicated to various analyses. Glassware for trace metals analyses should be routinely acid cleaned; other glassware should be rinsed in deionized/distilled water. Detailed cleaning procedures are in the O & M manual(8)

7.4 Laboratory Support for the Field

The laboratory must prepare standards for calibrating field instruments and for field testing the quality control samples. Clean sample containers and shipping materials should be supplied weekly. This section discusses reference solutions, laboratory evaluation of field equipment, and routine materials supplies. Detailed procedures for preparations of solutions are in the O & M manual(8).

7.4.1 *Conductivity Standards*

Field calibration for conductivity measurement is a single point calibration with the standard 0.0005M KCl. Each month, sufficient quantity is prepared for each field site to receive 1 liter of this dilute standard. It is recommended that this standard be prepared in a large polyethylene carboy dedicated to this purpose.

The conductivity of the field standard is established by comparison with a calibration curve, then the Field Conductivity Standard form (Section 7.8) is filled out, and a 1-liter bottle for each site is filled and labeled for shipment. After 1 mo, a new standard is sent to the field, and the old field conductivity standard is returned to the laboratory, and rechecked, and the data recorded again on the Field Conductivity Standard form so that the before and after values can be compared.

Table 7-3. *NBS-SRM's Applicable to Rainwater Analysis*

Measurement	*SRM#*	*Type*	*Value*	*Unit*
pH	*185e*	*Potassium Acid Phthalate*	*4.004*	*pH (25°C)*
pH	*186 Ic*	*Potassium Dihydrogen Phosphate*	*6.863*[a]	*pH (25°C)*
	186 IIc	*Disodium Hydrogen Phosphate*	*7.415*	*pH (25°C)*
Conductivity, K^+, Cl	*999*	*Potassium Chloride*		
Ca^{++}	*915*	*Calcium Carbonate*		
Mg^{++}	*929*	*Magnesium Gluconate*		
K^+, NO_3	*193*	*Potassium Nitrate*		
NH_4^+, PO_4^{-3}	*194*	*Ammonium Dihydrogen Phosphate*		
Na^+, Cl^-	*919*	*Sodium Chloride*		
$SO_4^=$		*None Available*		

[a] *Instructions are included for preparation of each pH value using different ratios of 186 Ic and 186 IIc.*

Table 7-4. *Tolerances for Class A Volumetric Glassware*[a]

Type of Glassware	*Capacity*[b] *(ml)*	*Limit of Error (ml)*
Graduated flask	*25*	*±0.03*
	50	*±0.05*
	100	*±0.08*
	200	*±0.10*
	250	*±0.11*
	300	*±0.12*
	500	*±0.15*
	1000	*±0.30*
	2000	*±0.50*
Transfer pipet	*2*	*±0.006*
	5	*±0.01*
	10	*±0.02*
	25	*±0.025*
	30	*±0.03*
	50	*±0.05*
	100	*±0.08*
	200	*±0.10*

[a] *Abridged reference 10*
[b] *Less than and including.*

7.4.2 *pH Electrode Reference Solution*

A pH electrode may perform well in a pH buffer, but it may be inaccurate for a dilute sample; therefore, it is important to check pH electrodes with a dilute solution. The pH electrode reference solution is a dilute solution used to check all laboratory and field pH electrodes before the latter are sent to the field The pH electrode reference solution should be protected from air in a sealed container, and should be refrigerated. The data should be recorded on the Field pH Electrode Test Solution form (Section 7.8).

7.4.4 *Evaluation of Equipment*

All meters and electrodes are tested in the laboratory before they are shipped to the field. Meters usually have a serial number affixed, but electrodes do not, so an identification number should be given to each electrode. Acceptance tests are in Section 6 3 and detailed laboratory procedures are in the O & M manual(8).

7.4.5 *Supplier of Material*

All sample containers sent to the field must be washed and tested in the laboratory for cleanliness. All sample containers and shipping materials sent to the laboratory from the field sites must be replaced routinely by the central laboratory as soon as possible after arrival to avoid exhausting the field's supply, thus minimizing downtime. All other supplies required by the field should be shipped when requested on the data form (Sections 6.8.3 and 6.8.5; O & M manual, Section 2.8.3).

7.4.3 *Preparation of Audit or Test Samples*

Accuracies of field conductivity and pH measurements are evaluated with field quality control audit samples. Monthly, an audit sample should be prepared using the procedures in the O & M manual(8). Aliquots (about 60 ml) of the diluted audit sample should be sent to each site. Three aliquots in bottles should be kept by the laboratory; when the samples are sent to the field, the laboratory should determine the initial pH and conductivity of the three aliquots, and then the aliquots should be refrigerated.

When the field audit samples from all sites have been returned to the laboratory, the samples are reanalyzed along with the three aliquots. The laboratory's pH electrode is checked for accuracy against a backup electrode. The data are reported to the QA coordinator (Section 9.2).

7.5 Analytical Methodology

To obtain acceptable data, one must choose an analytical procedure and range appropriate for the sample The next step is to gain experience with the instrument and its performance characteristics—its precision and accuracy. One way to gain such experience is to document performance before analyzing samples

7.5.1 *Selection of Analytical Methods*

Discussed here are state-of-the-art analytical procedures applicable for rainwater analysis, in Table 7-5; others may be used if similar sensitivities are achieved.

Existing data(12) demonstrate that procedures are not sensitive enough to provide meaningful data for most phosphate (PO_4^{-3}) analyses and that results of potassium (K^+), calcium (Ca^{++}), and magnesium (Mg^{++}) analyses are frequently at the detection limits so careful analytical procedures must be used. Recommendations for optimal instrument sensitivity and performance are in Sections 7 5.3 and 7 6. A possible alternate is to obtain greater sensitivities for potassium (K^+), calcium (Ca^{++}), and magnesium (Mg^{++}) with graphite furnace atomic absorption

7.5.1.1 Gravimetric Measurements—In the field and the laboratory, the volume of rain is determined by measuring the mass and by assuming a density of 1 gm/cm^3 Mass of rain is measured in the field to compare collector efficiency with the rain gauge; the sample mass sent to the laboratory is checked to determine if leakage occurred in shipment.

In addition to a 20 kg capacity balance for weighing rain buckets, the analytical laboratory should have an analytical balance which achieves the precision necessary for the preparation of reagents and salts for calibration standards. Balances should be in a temperature-controlled room free from drafts and on a rigid table to minimize vibrations. The legs of the balance should be adjusted so that it is level. Electronic balances should be electrically grounded

Before weighing, the balance pan is brushed off with a soft brush, and then the balance zero is set After the weighing, the balance should be cleaned of all (potentially corrosive) chemicals. If analytical balances are not in use, the beam should be raised above the knife edges.

Analytical balances should be calibrated daily using either NBS Class-S weights or weights traceable to NBS Class-S; NBS Class-S weights should be stored as primary references in the laboratory, and daily calibration weights should be certified against these; and the Certification of Weights to NBS form (Section 7 8) should be completed. All certified weights should be recertified every 6 mo.

The procedure used to certify weights should be repeated five times: the balance should be zeroed according to manufacturer's recommendations, the NBS-certified 1.0- and 5.0-g weights should measured, and the test 1.0- and 5.0-g weights should be weighed. Each balance should be calibrated using weights close to those actually measured High-capacity balances should be calibrated similarly, with 1.0-and 5.0-kg weights. The Balance Calibration Log (Section 7 8) should be completed each time the balance is calibrated.

The 1.0- and 5.0-kg weights should be shipped to the field in wooden storage boxes suitable to protect the weights when they are not being used. Explicit instructions on the care of calibration weights should be given by the QA coordinator or field manager

Balances should be maintained periodically according to manufacturer's recommendations. For the laboratory analytical balances, factory maintenance is usually once a year. A record of maintenance should be kept for each balance; (complete the Balance Factory Service form (Section 7.8)).

7.5.1.2 pH Measurement—Laboratory pH measurement is a check on field measurement and sample degradation

Table 7-5. *Procedures Recommended for Rainwater Major Constituent Analysis*

Analysis	*Instrumental Method*
Volume (weight)	*Analytical balance*
pH	*pH meter*
Conductivity	*Conductivity meter*
Strong acid	*Gran plot using pH meter*
Total acid	*Potentiometric titration with pH meter*
Chloride, phosphate, nitrate & sulfate	*Ion chromatography (preferably automated)*
Ammonium, phosphate	*Technicon automated colorimetry*
Sodium, potassium, calcium, magnesium	*Atomic absorption spectrophotometry (flame)*

The procedure is given in the O & M manual(8).

The pH meter should be calibrated before and after each measurement or each series of 20 measurements. If initial and final calibrations have changed more than 0 02 unit, the measurements should be repeated; if changes reoccur, a problem with the apparatus should be remedied

Each day the meter is used, it should be calibrated, and real-time quality control procedures (Section 7 6) should be applied The quality control sample (Section 7.6) should be included with each set of samples analyzed

Samples are measured directly after the meter has been calibrated and the electrode has been washed. Neither the electrode nor any other object should be inserted into any of the bulk solutions, and no solution should ever be poured back into a bulk container For measurement, use a small vessel (vial or test tube) rinsed first with distilled/deionized water and then (if sufficient solution permits) with sample

The working pH electrode should be checked weekly, if performance is unacceptable, replace it with a new tested electrode

7.5.1.3 Strong Acid (by the Gran Method)—Data from a recent study(11) indicate that 95% of rainwater samples from the eastern United States contain strong acid at a concentration at 1 6 x 10^{-4}N or less (pH greater than 3 8) and that the median rainwater concentration of strong acid is 4.6 x 10^{-5}N (pH of 4.3) Strong acid is determined using the Gran(12) plot, based on the Nernstian response of the pH electrode. The procedure is in the O & M manual(8)

At setup time, conditioning solution intercepts and spike recovery data should be evaluated. Real-time evaluation of this information along with quality control samples to be analyzed are discussed in Section 7.6.

Key performance indicators for Gran titration are the solution temperature, the conditioning solution's initial potential, time for potential stabilization after each addition of base, the correlation coefficient of the linear least squares fit of a function ψ vs volume V of base added, and the spike recovery. All potentials should be measured at the same temperature During the initial setup and between analyses, the titration vessel should be rinsed with conditioning solution; 7.0 ml of conditioning solution should be pipetted into the vessel; and the potentials of the two solutions should be measured. The rinsing and the 7.0 ml addition should be repeated until the measured potentials of two solutions agree to $\pm$1.2 mv. If this cannot be achieved, the temperature is probably not stable or there is an electrode drift problem. If the potential readings are not stable within 30 s, the electrode drift is excessive, so the meter and pH electrode should be reevaluated (Section 6.3).

7.5.1.4 Acidity—Acidity is determined potentiometrically by titrating to a pH of 8 3. The procedure is in the O & M manual(8). Care must be taken during the titration to CO_2-free water and to protect the solution from air. The temperature is crucial because pH is temperature dependent. The meter and pH electrode should be evaluated (Section 6.3)

Spikes should be analyzed each day before and after the samples are analyzed, and the data evaluated immediately The real-time evaluation of this information along with the quality control samples to be analyzed are discussed in Section 7.6.

7.5.1.5 Conductivity—Conductivity measurements are made both in the field and in the laboratory Laboratory measurements serve to check for sample degradation and to evaluate field measurements. The procedures for calibration of the apparatus and determination of conductivity are in the O & M manual(8)

The conductivity apparatus is calibrated using KCl solutions of known conductivity before and after each measurement or series of measurements. If a change of more than 5% occurs, repeat the measurement; if drift reoccurs, a problem with the apparatus must be corrected In general, stable values occur in 30 s

If conductivity of the sample is to be measured on the aliquot poured for pH, the conductivity must be measured before the pH. The conductivity cell should be washed after calibration—first with distilled/deionized water and then with a rinse of sample, using the same two vials or test tubes of sample to be used for the pH measurement (discussed above in Section 7.5.1 2). Dip the conductivity cell three times in the rinse test tube and three times in the measurement solution, and then take the reading; between measurements, rinse the cell thoroughly with deionized water, and shake off excess water Store the cell as recommended by the manufacturer.

Real-time quality control procedures as well as performance evaluations using the results of the quality control samples are in Section 7.6. New conductivity cells should be checked upon receipt, using the conductivity cell acceptance tests in Section 6.3.

7.5.1.6 Automated Colorimetric Measurements—Ammonium (NH_4^+) and orthophosphate (PO_4^{-3}) ions are measured using automated colorimetric procedures. Data from a recent study (11) indicated that 95% of rainwater samples collected in the eastern United States contain phosphate concentrations less than 0 04 microgram/ml, and 95% contain ammonium concentrations of 0.05 to 1 6 microgram/ml The median concentration was 0.28 microgram/ml for ammonium and 0.008 microgram/ml for phosphate. Ammonium concentrations are generally at or below the detection limit of the automated colorimetric procedure.

The automated ammonium analysis (13) uses the Berthelot reaction—a blue compound is formed after addition of an ammonium salt and sodium phenoxide to sodium hypochlorite. The ammonium concentration is determined spectrophotometrically at 630 nm. The automated phosphate analysis (14) uses a phosphomolybdenum blue complex formed and measured spectrophotometrically at 880 nm. Both procedures are in the O & M manual (8).

Key performance indicators for automated colorimetric measurements are baseline noise, calibration standard response, and calibration curve linearity After instrument performance is documented, baseline noise and calibration standard response are measured (scale expansion) to identify the most sensitive analysis and to be used as daily guides for evaluating performance.

Real-time quality control procedures as well as information on quality control samples to be analyzed are in Section 7.6.

7.5.1.7 Ion Chromatographic Measurements—Chloride (Cl^-), nitrate (NO_3^-), and sulfate ($SO_4^=$) anions are analyzed by ion chromatography A recent study(11) showed that 90% of rainwater samples from the eastern United States contain Cl^- concentrations from 0.02 to 2 0 microgram/ml, 99% contain NO_3^- in the range of 0.1 to 10.0 microgram/ml, and 96% contain $SO_4^=$ in the range of 0 2 to 10.0 microgram/ml. The median concentrations are 0 26 microgram/ml for Cl^-, 1 44 microgram/ml for NO_3^-, and 2.39 microgram/ml for $SO_4^=$. The procedures in the O & M manual(8) recommend instrument setup to achieve maximum sensitivity for these analyses.

Key performance indicators for the ion chromatograph are column backpressure, resolution, and baseline noise and drift. After instrument performance is documented, baseline noise and calibration standard response are

defined (scale expansion) to indicate the most sensitive analysis and to serve as guides to evaluate daily performance. As part of real-time QC, the first calibration curve linear least squares fit should be determined, and the analyst spike should be calculated and compared with the known value. After the analytical data are measured, performance is evaluated using results of QC samples and curve parameters (Section 7 6).

7.5.1.8 Atomic Absorption Measurements—Atomic absorption is used to determine sodium (Na^+), potassium (K^+), calcium (Ca^{++}), magnesium (Mg^{++}) cations. Recent data(11) show that 96% of rainwater samples from the eastern United States contain Na^+ in the range of 0.02 to 1.0 microgram/ml; 94% contain K^+ at less than 0.25 microgram/ml; 68% contain Ca^{++} at less than 0.25 microgram/ml, and 29% contain Ca^{++} in range of 0.25 to 1 25 microgram/ml; and 66% contain Mg^{++} at less than 0.04 microgram/ml, and 30% contain Mg^{++} in the range of 0.04 to 0.16 microgram/ml. The median concentrations are 0.25 microgram/ml for Na^+, 0.06 microgram/ml for K^+, 0.13 microgram/ml for Ca^{++}, and 0.03 microgram/ml for Mg^{++}. These low concentrations are detection limit analyses for K^+, Ca^{++}, and Mg^{++}, so very sensitive procedures must be used. Procedures for the analyses are in the O & M manual(8), with recommendations for maximum atomic absorption sensitivity. Since the detection limit is determined to a large extent by light source noise, the most stable light source available should be used. Electrodeless discharge lamps (EDL's) are more intense than the conventional hollow cathodes; an EDL is not available for K^+ analysis.

Key performance indicators for atomic absorption are the baseline noise, the calibration standard response, and the curve linearity and reproducibility. After instrument performance is documented, baseline noise and calibration standard response are defined (scale expansion) to give the most sensitive analysis as guides to evaluate daily performance. Real-time QC control procedures as well as information on analysis of QC samples are in Section 7.6

7.5.2 *Choice of Analytical Ranges*

For pH and conductivity measurements, one specifies the instrument precision. Instruments such as the ion chromatograph, the Technicon automated colorimetric analyzer, and atomic absorption analyzers have wide analytical ranges. Because very dilute samples are analyzed, the lowest range should be the instrument's most sensitive range; higher ranges are also used so that a high off-scale response on the lowest range can be measured to better than ±10% on the higher range

7.5.3 *Documentation of Instrumental Performance*

Instrument performance should be studied before rainwater samples are analyzed to give the analyst experience, to provide useful QC information, and to evaluate laboratory analytical techniques used at the concentrations of rainwater samples.

The instrument performance study for each constituent to be determined should consist of repetitive analyses of calibration standards at different concentrations. For pH, the Gran strong acid, the acidity and conductivity, and the instrument performance procedures are different from those for the other measurements. For pH, strong/total acid and conductivity, solutions of 10^{-3}, 10^{-4}, 10^{-5}, 10^{-6}N HCl are prepared in CO_2-free water, and carefully protected from air until they are analyzed, five aliquots of each of these solutions are poured, and five aliquots of the pH electrode reference solution are poured. The meter is calibrated for each measurement, as indicated by the specific procedure and the samples analyzed. The samples should be analyzed in the following order—electrode reference solution, 10^{-6}N HCl, 10^{-5}N HCl, 10^{-4}N HCl, 10^{-3}N HCl—repeated for five sample aliquots. For each analysis, the pH, Conductivity, and Gran Strong Acid Instrument Performance form (Section 7.8) is completed

For all other analytes, the instrument is set up for the most sensitive analysis, and the calibration standards containing concentrations to yield responses of 5%, 10%, 20%, 40%, 60% and 80% of full scale are analyzed. A synthetic rainwater sample (Section 7.6) containing concentrations close to the median rainwater concentrations should also be analyzed. The six-point calibration curve and the synthetic rainwater sample should be analyzed consecutively five times. A linear least squares fit of expected concentration versus response is calculated for the calibration standards; the curve parameters from this fit are used to calculate regression concentrations of each data point. The average or standard deviation of the regression concentrations should be calculated at each concentration, and the percentage relative standard deviation and the percentage accuracy should be compared to the known concentration.

Data for each calibration curve should be considered separately to determine detection limits. A linear least squares fit of each calibration curve should be calculated; one of the curve's parameters which can be calculated from this fit is the Hubaux and Vos(15) detection limit (Appendix A), which is much higher than the one calculated as two times the baseline noise; thus it could be considered the lowest level for which a precise analysis can be done. After a sufficient number of values are available, an upper control limit can be used to reject poor calibration curves Until control limits are established using range chart techniques (Section 8 0), the average detection limit can be taken as the control limit for evaluation of daily instrument performance.

All data from the instrument performance study are tabulated and plotted as QC data on the Precision-Accuracy Instrument Performance form and its corresponding plot (Section 7 8), and the key data should be summarized on the Instrument Performance Summary form

The strip charts, the reduced data and the Precision-Accuracy forms from this study are filed to be readily available to the analysts and the laboratory director. If, at any time, degradation of instrument performance is suspected, then the original study can be reviewed to evaluate instrument performance. An example of a instrument performance study is in Appendix B.

7.6 Quality Control Program for Chemical Analysis of Precipitation Samples

When analytical data are reported, it is essential to specify the quality. Statements about quality should refer to the particular data set being reported, not to laboratory analyses in general, so it is necessary to implement a formal QC program which indicates the accuracy and precision of each data point reported.

Both an internal and an external QC program should be implemented. Internal QC includes calibration and real-time control by the analyst, analysis of special QC samples by the analyst, review of the data by the laboratory supervisor and QA coordinator, scheduled data checking for transcription errors by data processing personnel, and a final review of all QC data by the QA coordinator before reporting. The external QA includes analysis of blind samples received from an agency external to the central laboratory.

This section specifies QC samples to be analyzed, and discusses responsibilities for evaluation of the QC data. Control charts for both analyst review and managerial review are stressed. Procedures require real-time review of analytical performance by the analyst,

and QC review of all data directly after input to the computer.

7.6.1 *Sample Handling in the Laboratory*

7.6.1.1 Sample Logistics—All samples received by the laboratory should be checked in by a receiving clerk who records the site, date, and other identification; checks the field data form against sample labels to identify discrepancies; assigns a laboratory identification number to the sample, records the number and the date of arrival on the data form and in the logbook; examines the data form and the sample for certain conditions; and codes the information on the data form. The codes, which are basically footnotes that may be useful later in interpreting the data, should be stored with the sample data in the computer (Section 8.0). Table 7-6 suggests information to be coded. After logging in the samples, the receiving clerk should refrigerate them as soon as possible Data forms received with the samples are kept by the data clerk.

The receiving clerk should replace the old sample bucket or containers with clean, sealed, bagged ones, and should ship the new ones in shipping cartons with other required materials to the field sites as soon as possible These can be sent by ground transport since each site should have a 3-week supply on hand.

As soon as possible after receipt of samples, aliquots should be poured into clean 35 ml vials or 10 ml plastic test tubes for pH and conductivity analyses, and the vessels should be sealed with paraffin film. Then the remainder of the sample should be filtered, as indicated below (Section 7.6.1.2), and the filtrate should be sealed in a labeled plastic bottle of appropriate size and refrigerated until it is analyzed. Each analyst should take an aliquot for analysis, and return the sample to the refrigerator as soon as possible. If a volume of a sample is low, the analysis priorities should be in the following order: pH, conductivity, $SO_4^{=}$, NO_3^-, Cl^-, NH_4^+, Na^+, K^+, Ca^{+2}, Mg^{+2}, PO_4^{-3}, and acidity If there is adequate sample after pH and conductivity are determined, the sample should be analyzed for NH_4^+ before the other constituents.

After all analyses have been completed and the results checked, the sample may be transfered into a 125 ml polyethylene bottle for storage in a refrigerator or freezer for 6 mo to 1 yr for other tests or analyses. The best method for long-term storage may be to freeze the samples or to keep them at 4°C Stability tests for several months indicate that both the 4°C(16,17) and the freeze(17) methods are satisfactory.

7.6.1.2 Filtering the Samples—Particulates in rainwater can contaminate the sample over a period of time(18); thus it is necessary to remove them by filtration as soon as possible after the sample is received All parameters, except pH and conductivity, should be determined on the filtered sample. A procedure for sample filtering is in the O & M manual(8).

7.6.1.3 Scheduling the Analyses—Once a week, a list of all received samples for which analysis results have not been reported should be prepared from the receiving clerk's logbook, and copies given to laboratory personnel to alert everyone to the analyses that are to be done and to the data yet to be reported.

Table 7-6. *Sample Information to be Coded*

Snow/ice
Mixed: snow/rain; hail/rain
Sample contaminated
Possible sample leakage in shipping
Sampler inoperative — no sample
Insufficient sample for complete measurement
Rain gauge inoperative
Noticeable suspended particulates
Lid cycling
Field pH and conductivity measured x days after scheduled sample removal or end of event
pH/conductivity/temperature meter inoperative
Sample partially frozen
Unusual condition in area
Duplicate samples
Sequential samples

7.6.2 *Laboratory Documentation*

The following documents should be available to the analyst and the supervisor, and should be constantly updated.

1. *Laboratory Standard Operational Procedure* - detailed instructions on laboratory and instrument operations.
2. *The Laboratory Quality Assurance Plan* - clearly defined laboratory QA protocol, including personnel responsibilities and use of QC samples.
3. *List of In-House Samples* - dates for completion of analysis to allow the analyst to schedule further analyses.
4. *Instrument Performance Study Information* - information on baseline noise, calibration standard response, precision as a function of concentration, and detection limits used by analyst and supervisor to evaluate daily instrument performance (Section 7.5.3).
5. *Quality Control Charts* - most recent QC charts with control limits for all calibration curve QC parameters and for all QC samples; once a month, update all control limits to include data from analyses of the previous month; generate plots of all QC samples and curve parameters.
6. *Data Sheet Quality Control Report* - Generate a QC report after data for each analysis are input to the computer (preferably within 1 day of analysis); present information for all QC parameters, flag all data which exceed the statistically established QC limits; have the supervisor review this report to decide what is to be done for out-of-control samples; if necessary, the supervisor will schedule repeat analysis of samples.
7. *The Analyst's Spike Plot* - daily when the analysis is set up, the first sample analyzed should be the analyst spike; percentage recovery for this sample should be calculated and plotted by the analyst in real time (Section 7.6.5).

7.6.3 *Traceability of Calibration Standards*

7.6.3.1 NBS Traceability —As common reference points for laboratories, NBS traceabilities of chemical gravimetric, and thermometric calibration standards are desirable. As of May 1980, NBS had not provided a rainwater SRM, however, preparation of an analyst spike or an audit spike (Section 7.6.4) from NBS-SRM's is not required, but is recommended

For chemical traceability all calibration standards must be prepared from ASC reagent grade salts, and the accuracy of calibration standard preparations must be checked. With procedures proposed here, accuracy is checked by running an independently prepared analyst spike (Section 7.6.4) with each analysis and by checking each new set of stock standards against the old.

For gravimetric measurements, NBS traceability is provided by daily balance checks with weights traceable to NBS-certified weights, so each laboratory should maintain a set of NBS-certified weights (Section 7.5.1.1). The recommended procedure is to purchase weights *traceable* to NBS from a commercial supplier and to have them certified by an NBS-approved laboratory; it is much more expensive to have NBS calibrate a set of weights directly.

For temperature measurements, NBS traceability is provided by thermometers calibrated against an NBS-calibrated thermometer, so each laboratory should maintain an NBS-calibrated thermometer, and should calibrate thermometers for daily use against the NBS thermometer (Section 6.3). It is time consuming but not expensive to have NBS calibrate a thermometer, NBS will calibrate at $30.00/point (calibration needed at two points only, 0°C and 25°C); and NBS will visually inspect for flaws and reject if flaws are found For NBS calibration, thermometers should be shipped (not mailed) to:

National Bureau of Standards
Route 270
Quince Orchard Road
Gaithersburg, MD 20760

7.6.3.2 Reference Water Samples—The QC chemist may dilute and mix reference water samples to prepare synthetic rainwater samples for independent internal QC for an audit spike sample. The two sources of reference water/wastewater samples are(19):

1. *EPA Cincinnati* - (Quality Assurance Branch, EMSL-Cincinnati EPA, Cincinnati, Ohio 45268, 513/684-7327) QC water/wastewater samples without charge to be used as "secondary checks within laboratory quality control" prepared solely for internal QC samples, data not reported to EPA Samples prepared from ACS reagent grade chemicals are sent as concentrates in sealed-glass ampules; when diluted according to instructions, should give the calculated EPA values which are sent in a separate envelope. Available samples for rainwater analyses:

MINERAL/PHYSICAL ANALYSES
Na^+, K^+, Ca^{++}, Mg^{++}, pH, $SO_4^=$, Cl^-, F^-, alkalinity/acidity, total hardness, total dissolved solids, and specific conductance, two concentrations

NUTRIENTS
nitrate-N, ammonia-N, Kjeldahl-N, orthophosphate, and total phosphorus, two concentrations

2. *Environmental Resource Associates (ERA)* - (120 East Sauk Trail, Suite 150, South Chicago Heights, Illinois 60411, 312/755-6060.) Commercially prepared reference water/wastewater samples of known composition from reagent grade salts; selected samples from the batch analyzed by ERA and by three independent laboratories.

7.6.4 *Preparation of Analyst's Spikes and QC Audit Spikes*

7.6.4.1 Analyst's Spike—When preparing calibration standards, the analyst should prepare an analyst's spike from a different stock solution; concentration of the spike should be approximately at the midpoint of the calibration curve, however, if the majority of samples have concentrations below the midstandard, the spike should be prepared within that range

7.6.4.2 Quality Control Audit Spikes—For management of laboratory analyses, the QC chemist should prepare a set of audit spike samples once a month; these are simulated rainwater samples containing all of the major constituents of rainwater Table 7-7 is a suggested scheme for the preparation of an audit spike sample. In this scheme, stock standards are prepared by weighing reagent grade chemicals, and diluting them to 1 liter. Each stock solution undergoes a preliminary dilution, dilution A; each aliquot of dilution A is diluted to 1 liter (in a volumetric flask) to obtain dilution B The resulting rainwater concentrations (last column, Table 7-7), are approximately the medians obtained in a recent study of Eastern United States precipitation samples(11) Each month, the QC may vary the final rainwater concentrations of dilution B by varying the volumes of dilution A delivered. Dilution A should be kept refrigerated, especially if nitrate and ammonium are present

If a QC chemist weighs several reagents into the same volumetric flask for the stock standard, the amount of pipetting would be decreased, but the possible ratios of the mixed species would be limited. The level of pipetting could be reduced by mixing several species at the dilution A level without loss of possible ratios of the mixed species

7.6.5 *Real-Time Quality Control Procedures*

Real-time QC procedures, which stress analyst evaluation of the calibration curve during analysis and plotting of one QC data point when each analysis is set up, are designed to spot problems during the analysis so that corrections can be made immediately. QC data obtained by analysis of special QC samples (Section 7.6.6) are not evaluated in real time. Data from analyses with the automated colorimeter, ion chromatograph, and atomic absorption spectrophotometer yield calibration curve correlation coefficients (linearities) and detection limits which should be evaluated in real time. The control limits for detection limits and correlation coefficients are to be statistically established (Section 8.0), but until sufficient data are available to calculate these limits, the limits established in the instrument performance study may be used (Section 7.5.3)

7.6.5.1 Real-Time Plotting of Analyst Spike Data—After each instrument is calibrated, the analyst should immediately run an analyst spike (Section 7.6.4) as the first QC sample to ensure that calibration standards were correctly prepared and that no degradation of the standards has occurred. After the analyst spike sample has been run, its value should be calculated by using the first calibration curve of the day The percentage recovery should be calculated and plotted as indicated in Figure 7-1 (For pH and conductivity, the absolute magnitude, not the percentage recovery, should be plotted.) The horizontal average recovery and control limit lines (Figure 7-1) are those calculated in the most recent monthly QC report. If an out-of-limits data point is noted, an explanation should be sought. If eight successive values fall on one side of the average line, the indicated bias should be evaluated.

7.6.5.2 Balance—The analytical balance should be calibrated daily against Class-S weights, and the Balance Calibration Log (Section 6 8.5) should be completed. The balance should be zeroed before each use

7.6.5.3 pH Measurement—The pH meter should be calibrated as indicated in the O & M manual(8) After the first calibration, the first sample analyzed should be the pH electrode reference solution. The analyst should plot and evaluate the pH value (Figure 7-1). Backup electrodes should always be in the laboratory to check the first electrode(s) if the reading differs from the previous one by more than ±0.03 unit. The pH calibration drift should be evaluated after 20 samples are analyzed; if the drift is more than ±0.02 pH units, the analysis should be stopped, and the meter and electrodes should be checked.

7.6.5.4 Strong Acid and Acidity Measurements—For strong acid determination, each day when sample measurements are begun, three conditioning solutions and an analyst spike should be measured and calculated using the linear least squares fit, as described in the procedure in the O & M manual(8) If correlation coefficients from the calculation are less than 0.9990, the indicated problem should be eliminated. The value of V_e (the equivalent volume of base added) for each conditioning solution and the

Table 7-7. Preparation of a Synthetic Rainwater Sample

	Stock[a]					Dilution A				
		Primary		Secondary			Primary		Secondary	
Salt	Weight g	Species	µg/ml	Species	µg/ml	ML[b]	Species	µg/ml	Species	µg/ml
$NaCl$	0 1648	Cl	100 0	Na	64.83	20	Cl	20 00	Na	12.97
KH_2PO_4	0.0904	PO_4	25 01	K	10.27	4	PO_4	1 000	K	0 4108
KNO_3	0.2586	K	100 0	NO_3	58.80	10	K	10 00	NO_3	5 880
$CaSO_4 \cdot 2H_2O$	0.1074	Ca	25.00	SO_4	59.92	—	—	—	—	—
$MgSO_4 \cdot 7H_2O$	0.2536	Mg	25.00	SO_4	98.83	12	Mg	3 000	SO_4	11 86
NH_4NO_3	0.4437	NH_4	100 00	NO_3	343.8	20	NH_4	20 00	NO_3	68.76
$NaNO_3$	0.3697	Na	100 0	NO_3	269.7	10	Na	10 00	NO_3	26.97
H_2SO_4(0.1N)[d]	—	H	101 0	SO_4	9606.0	10	H	10 10	SO_4	480.3

	Dilution B[a]					Final Ion Concentrations	
		Primary		Secondary		"Dilution B"	
Salt	Vol Dil A (ml)	Species	µg/ml	Species	µg/ml	Species	Conc (µg/ml)
$NaCl$	13	Cl	0 260	Na	0 169	H	0.050
KH_2PO_4	8	PO_4	0 008	K	0 004	Cl	.260
KNO_3	6	K	0 060	NO_3	0 035	PO_4	008
$CaSO_4 \cdot 2H_2O$	5[c]	Ca	0.125	SO_4	0 300	NO_3	1.27
$MgSO_4 \cdot 7H_2O$	10	Mg	0 030	SO_4	0 119	SO_4	2.82
NH_4NO_3	14	NH_4	0 280	NO_3	0 963	Na	0 269
$NaNO_3$	10	Na	0.100	NO_3	0 270	K	0.064
H_2SO_4(0 1N)[d]	5	H	0 0505	SO_4	2.402	Ca	.125
						NH_4	.280

[a] *Concentrations are based on a final dilution volume of 1 liter*
[b] *ML gives the volume to take to dilute to 100 ml*
[c] *Volume (ml) of stock*
[d] *Either standardized in the laboratory or purchased from a commercial supplier*

analyst spike percentage recovery should be plotted and obtained as indicated in the O & M manual(8). At the end of the day, an analyst spike and a conditioning solution sample should be analyzed. The initial conditioning solution potential for each sample should be within 1 2 mv of the potential for the conditioning solution. According to the O & M manual(8), an analyst spike should be analyzed before and after samples are determined and these values should be plotted daily (Section 7.6.5.1).

7.6.5.5 Conductivity Measurement—Each day, the conductivity apparatus should be calibrated before and after samples are analyzed. The first sample should be an aliquot of a 3×10^{-4}M KCl or the pH electrode reference solution. The analyst should calculate the conductivity using the first calibration curve, and then plot and evaluate the value of the conductivity of this reference sample (Figure 7-1).

7.6.5.6 Automated Colorimetric Analysis (Technicon)—This instrument should be set up, and the baseline noise and instrument response should be evaluated by comparison with data from the instrument performance study. Any problem noted should be investigated The instrument should be calibrated as described in the O & M manual(8). For real-time QC, the first calibration curve should be checked for linear response and adequate detection limit by using a least squares fit of the first calibration curve and by calculating a detection limit. Linearity should not be less than 0 9990; the detection limit should be within the statistically established control limits.

The first sample analyzed should be the analyst spike. Concentrations of this sample should be calculated from the first calibration curve, and the value obtained should be plotted and evaluated (Figure 7-1) In addition, the calibration response during analysis, should be checked to see that it is changing less than 5% from one calibration curve to the next; if a greater change is noted, the analysis should be stopped, and an explanation sought

7.6.5.7 Ion Chromatographic Analysis (Dionex)—Calibration procedures are in the O & M manual(8). For real-time QC the baseline noise and the response of the first standard at setup time should be monitored The first sample analyzed should be the analyst spike; it should be calculated from the first calibration curve, and the value should be plotted and evaluated (Figure 7-1).

7.6.5.8 Atomic Absorption Analysis—Atomic absorption calibration procedures are in the O & M manual(8) For real-time QC, the first calibration curve should be analyzed, and the linear least square fit of response vs concentration should be calculated. The correlation coefficient should be 0.9995 or greater, and the detection limit should be within the statistically established limits. The first sample analyzed should be the analyst spike; it should be plotted in real time.

7.6.6 *Analysis and Evaluation of Quality Control Samples*

Each day (each analytical run) or at least after every 50 samples, a reagent blank, an old sample, an analyst spike, and an audit spike should be analyzed. For most procedures discussed (except the ion chromatographic, the Gran strong acid and the acidity analyses), an analytical run may include more than 50 samples so QC is about 8%. For ion chromatographic analysis, one analytical run may include 20 samples; 4 QC samples and 20 samples make the QC 16.7%. The Gran strong acid procedure is relatively slow, so fewer than 25 samples/day can be determined; recommended are only two analyst spikes and one audit spike as QC samples for a QC of 12%.

7.6.6.1 Reagent Blank—This deionized water QC sample, which is subjected to the same preparation procedure as the routine samples being analyzed, should be analyzed to check for random contamination which may have occurred in sample preparation or analysis.

7.6.6.2 Old Sample—This randomly chosen, previously analyzed QC sample (if no sample degradation has occurred)

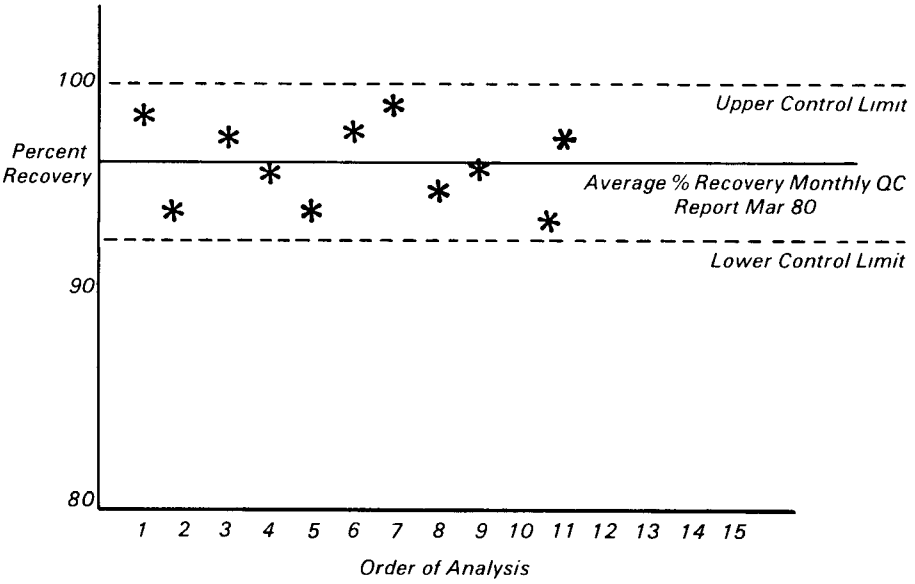

Figure 7-1. *Analyst spike plot for $SO_4^=$ analysis spike stock solution prepared 4 Jan 1980; expected conc. 2.00 µg/ml.*

provides information on analytical precision for different days of analysis, it may provide information on sample stability, but this is not its primary purpose. Sample degradation can be corroborated by a repeat measurement at another time and the value in the QC data noted accordingly

7.6.6.3 Analyst Spike—This QC sample prepared by the analyst from a stock solution independent of that used to prepare the calibration standards provides information on the accuracy of the calibration standard and the precision of analysis. The analyst spike should be analyzed at the beginning of the run; results should be calculated and plotted in real time (Section 7.6 5)

7.6.6.4 Audit Spike—This QC sample is prepared by the quality control chemist (Section 7.6.8) and it is analyzed as an unknown (blind) by the analyst. The data are reported to the QC chemist who calculates percentage recovery and reports the value to the analyst and the laboratory director. The purpose of this QC sample is to assess data quality independently of analyst judgment.

7.6.7 Evaluation of QC Data

7.6.7.1 QC Data Handling—If a computer is available, data for QC samples are calculated as they are being input and compared to control limits established in the most recent monthly QC chart (Section 7.6.2). After input, the Data Sheet QC Report (Section 7.6.2) is printed by the computer If no computer is available, this procedure can be done manually The report on the performance of the QC samples should be given to the laboratory supervisor for evaluation (Section 7 6.7 2) to see if the data are acceptable for reporting or if reanalysis is necessary

When the data form is input to the computer, the audit spike data are also calculated, these spike data should be given to the QC chemist, who tabulates the data and calculates the percentage recoveries The QC chemist routinely gives the audit spike data to the laboratory director, who reviews this independent audit data before reporting the analytical data to the project manager Once a month, the QC chemist performs a QC audit to review the audit data with the analyst.

Once a month, all QC sample data and calibration curve parameters obtained during the month are combined with all previous data for the same parameters; the data are plotted, and the new control limits are calculated. A copy of the monthly QC plot should be given to the laboratory supervisor, the QC chemist, and each analyst.

7.6.7.2 Quality Control Reports and Guidelines for Initiating Corrective Action—After input of data to the computer, the Data Form Quality Control Report (Section 7.6.2) is given to the laboratory supervisor; this report flags any out-of-limits conditions for the analysis. The analyst or the supervisor should check to see that any out-of-limits conditions are not results of transcription errors from stripchart to data form or from data form to computer, if a transcription error is found, the transcription of all data on the data form should be checked, a corrected data form should be input, and a new QC report issued The problem should be carefully documented and the old data form and QC report should be filed with the new The new QC should replace the old in the computer QC data base If the out-of-limits conditions are not due to transcription errors, another explanation should be sought

The most critical parameters are the calibration curve parameters, because any problem with them directly affects the data If an explanation cannot be found for out-of-limits calibration parameters, all samples analyzed between the questionable calibration curves should be reanalyzed.

If only one of several QC samples is out-of-limits, an explanation should be sought but if one cannot be found, no action is needed The supervisor may assume that the problem was with the particular QC sample itself, but may retain the out-of-limits data in the QC data base

If several QC samples are out-of-limits but an explanation is not found, all samples analyzed with the QC samples (between bracketing calibration curves) should be reanalyzed.

In any case, an out-of-limits QC sample requires evaluation and an explanation by the supervisor The explanation may be notes on the QC report If samples are to be reanalyzed, the supervisor should note this on the data form and in the QC report At the time of the reanalysis, it should be noted on the data form that the samples are being reanalyzed, and the date of the first and the repeat analyses should be given

The supervisor also evaluates the QC plots when they are periodically generated Since the supervisor has already evaluated out-of-limits conditions in the QC reports, all out-of-limits conditions should have been explained or eliminated (by reanalysis) before the monthly plots are generated. Accordingly, the monthly plots should be examined primarily for systematic bias If no systematic bias is present, all plotted values should be evenly distributed about the average-value line If at any time, eight successive values appear on one side of the line, a bias in the data exists, the analyses should be stopped, an explanation sought, and any action taken should be noted on the plot

7.7 Evaluation of Laboratory Performance

The QC procedures (Section 7.6) stress the supervisor's roles in evaluating QC and in scheduling reanalyses until data are acceptable for reporting. This section discusses the QC chemists'

roles in evaluating laboratory performance by independent QC checks and by external audits

7.7.1 *Independent Internal Quality Control*

The QC chemist is to ensure that QC procedures are implemented and to provide independent judgement on the quality of the data generated in the laboratory. Quality of data is checked by introducing audit spikes and by synthetic rainwater samples inconspicuously added to the sample stream (Section 7.6.6 4). Audit spikes may be prepared by the QC chemist from NBS-SRM's (Section 7.2.3), from reagent grade salts or from reference waste/wastewater samples (Section 7.6 3.2). Whatever the source, a reference rainwater with a known composition in the range of typical rainwater samples is submitted to the laboratory as a blind audit sample to be analyzed routinely, and the data reduction is done by the individual who handles the data Finally, the data are flagged in the data set by the QC chemist who checks for out-of-limits conditions and then reports the data to the laboratory director

7.7.2 *External Performance Audit*

Laboratories analyzing rainwater samples are recommended to participate in an interlaboratory comparison at least two times a year. An external agency (e g , EPA or USGS) should provide to each laboratory audit samples which contain constituents of interest in concentrations typically found in rainwater samples, these samples should arrive in the laboratory as blind samples, and exactly the same procedures should be applied to them as in routine analysis When audit data are reported with regular sample data, the external agency informs the laboratory of the blind sample identities These audits can be used by the QA coordinator to assess analytical accuracy (Section 9 2)

7.7.3 *System Audit*

Once a year, the project manager or a designee should document current standard operating and QA procedures by completing the Laboratory Questionnaire (Section 7.7.4) in cooperation with the laboratory supervisor and the QC chemist.

The questionnaire will be submitted to the laboratory director 4 to 6 weeks before the interview is conducted to amplify responses to various questions. During the interview, written procedures, QC charts, and audit spike recovery data may be examined. The auditor summarizes all findings in a System Audit Report.

7.7.4 *Laboratory Questionnaire*

In the laboratory questionnaires, the R and G denote "recommended strongly" and "guidelines", respectively

Preliminary Questionnaire

Questionnaire Completion Date _____

Laboratory: _____

_____

Street Address: _____

_____

Mailing Address (if different from above): _____

_____

City: _____

State. _____ *Zip* _____

Laboratory Telephone No.:Area Code: _____ *No* _____

Agency Director. _____

Quality Assurance Officer _____
(Quality Control Chemist)

Questionnaire Completed By (If more than one, please indicate which section(s) of the questionnaire completed):

_____

_____

_____

_____

_____

Introduction-Laboratory Operations

Standard Operating Procedures (SOP)	*Yes*	*No*
1 Has an offical agency Standard Operating Procedures Manual been written?	____	____
2. Is the SOP Manual followed in detail?	____	____
3. Does it contain all quality control steps practiced?	____	____
4. Does each analyst have a copy at his/her disposal?	____	____
5. Has a methods validation study been completed for each analysis?	____	____
6 Are plots of instrumental accuracy and precision available for every analysis?	____	____
7. Are detection limit data tabulated for each analysis?	____	____

Laboratory Personnel

Position	*Name*	Academic Training *BS MS HS BA MA Ph.D*	*Special Training*	*Years experience in rainwater analysis*	*% time presently spent in rainwater activities*

Laboratory Staff Training

1. *Is a formal training program used?* *Yes*_____ *No*_____

   If yes, is it:

   Agency-wide *Yes*_____ *No*_____

   In-house *Yes*_____ *No*_____

   On-the-job training *Yes*_____ *No*_____

2. *Training outside local agency (courses attended).*

Course description or title	Who attended	Course length	Course type*	Year of attendance

State, Federal, College, University, Other _____

3. *Publications routinely received and used by agency.*

4. *Do you feel that your agency training is adequate?* *Yes*_____ *No*_____

   If not, what would be required to make it adequate?

Laboratory Facilities

Item	Available Yes	Available No	Comments (where applicable, cite system, QC check, adequacy of space)
1. Filter room or desiccator (either required for TSP) maintained at 15°-35° C and 50% relative humidity			
2 Gas			
3 Lighting			
4. Compressed air			
5 Vacuum system			
6 Electrical services			
7. Hot and cold water			
8. Laboratory sink			
9. Ventilation system			
10. Hood space			
11 Cabinet space			
12 Bench-top area (cite linear ft.)			
13 Lab space (cite linear ft.)			
14 Lab space utilized for offices (cite sq ft)			
15 Office space (cite sq. ft.)			
16. Storage space (cite sq. ft)			
17. Shared space			

Laboratory Equipment

Items	*# of units*	*Equipment*		*Condition/age*	*Ownership*		*% of use time used in rainwater programs*
		Make	*Model*	*Good-fair-poor*	*Air*	*Water*	
Balance analytical							
Vacuum Filtration apparatus							
NBS Calibrated thermometer							
Dessicator							
Ion Chromatograph							
Technicon							
Atomic Absorption							
Balance, top loader							
Class "S" weights							
Balance table							
Distilled water or deionized water							
Conductivity meter							
Glassware							
pH meter							
Drying oven							
Hot plates							
Refrigerator							

Laboratory Operation

A. RECEIVING CLERK _____
(Name)

			Yes	No
1	*Are all chemicals dated on receipt and thrown away when shelf life is exceeded?*	(G)	___	___
2	*Are all samples received by the laboratory logged into a bound notebook?*	(R)	___	___
3	*Are all samples filtered before analysis?*	(R)	___	___
4.	*Are all samples stored in the refrigerator between analyses?*	(R)	___	___

B. GRAVIMETRIC MEASUREMENTS

1	*Is the analytical balance calibrated daily with weights traceable to NBS?*	(R)	___	___
2	*Is the "Balance Calibration Log" kept up to date?*	(R)	___	___
3	*Is factory service scheduled and the "Balance Factory Service Form" completed?*	(R)	___	___
	Date next service is due _____			

C. ANALYST - pH _____
(Name)

			Yes	No
1.	*Does the analyst have his/her own copy of the standard operating procedures?*	(R)	___	___
2.	*Does the analyst have his/her own copy of instrument performance data?*	(R)	___	___
3.	*Does the analyst have his/her own copy of safety instructions?*	(R)	___	___
4.	*Does the analyst have his/her own copy of the latest monthly QC plots?*	(R)	___	___
5.	*Is the analyst aware of the most recent control limits?*	(R)	___	___
6.	*Does the analyst have a copy of the most recent list of samples in-house to be analyzed?*	(R)	___	___
	Date of list _____			
7.	*Are all solutions properly labelled?*	(R)	___	___
8.	*Has a "pH Meter/Electrode Acceptance Test Form" been completed for the meter and electrode currently in use?*	(R)	___	___
9.	*Is the "pH Acceptance Test Summary Form" kept up-to-date?*	(R)	___	___
10.	*Is the "Field Quality Control Audit Sample Report" completed on a monthly basis?*	(R)	___	___
11.	*Are rinse and measurement tubes poured for buffers and samples?*	(R)	___	___
12	*Is the pH meter calibrated before and after samples are analyzed?*	(R)	___	___
13	*Is the pH meter recalibrated after every set of 20 samples?*	(R)	___	___
14.	*After the initial calibration of the day, when the meter is recalibrated after a series of measurements, is the old calibration information written down before the meter settings are changed?*	(G)	___	___
15	*Is the pH electrode reference solution analyzed first and are the results plotted real time?*	(G)	___	___
16	*Are the following control samples analyzed with each run?*			
	Blanks	(R)	___	___
	Old Samples	(R)	___	___
	Audit Spike	(R)	___	___
17.	*Does the analyst review the quality control data sheet output by the data clerk, and then decide whether or not to release data for reporting?*	(G)	___	___
18	*Are electrodes stored as recommended by the manufacturer?*	(R)	___	___
19.	*Are electrodes checked and filled, if necessary, before each analysis?*	(R)	___	___

Laboratory Operation

D. ANALYST - GRAN STRONG/TOTAL ACID _____
(Name)

		Yes	No
1 Does the analyst have his/her own copy of the standard operating procedures?	(R)	___	___
2. Does the analyst have his/her own copy of instrument performance data?	(R)	___	___
3. Does the analyst have his/her own copy of safety instructions?	(R)	___	___
4 Does the analyst have his/her own copy of the latest monthly QC plots?	(R)	___	___
5. Is the analyst aware of the most recent control limits?	(R)	___	___
6. Does the analyst have a copy of the most recent list of samples in-house to be analyzed? Date of list _____	(R)	___	___
7. Are all solutions properly labelled?	(R)	___	___
8. Has a "pH Meter/Electrode Acceptance Test Form" been completed for the meter and electrode currently in use?	(R)	___	___
9. Are micropipets calibrated on at least a weekly basis or whenever the tip breaks?	(R)	___	___
10 Are repipets calibrated on a weekly basis?	(R)	___	___
11 Is the stock 1 0 N NaOH standardized each month against potassium acid phthalate?	(R)	___	___
12. Is solution temperature carefully monitored during analysis to see that it changes by less than 0.1°C?	(R)	___	___
13 Are conditioning solution data and analyst spike data calculated and plotted real time?	(G)	___	___
14. Are the Ψ function correlation coefficients of these data examined to ensure that they are greater than 0.9990?	(G)	___	___
15. Are the following analyzed each day?			
Three conditioning solutions and an analyst spike initially.	(R)	___	___
An analyst spike and a conditioning solution at the end of the analysis.	(R)	___	___
An audit spike.	(R)	___	___
16. Does the analyst review the quality control data sheet output by the data clerk, and then decide whether or not to release data for reporting?	(G)	___	___
17. Are electrodes stored as recommended by the manufacturer?	(R)	___	___
18. Are electrodes checked and filled if necessary before each analysis?	(R)	___	___

Laboratory Operation

F. ANALYST - TECHNICON _____
(Name)

		Yes	No
1 Does the analyst have his/her own copy of the standard operating procedures?	(R)	___	___
2. Does the analyst have his/her own copy of instrument performance data?	(R)	___	___
3. Does the analyst have his/her own copy of safety instructions?	(R)	___	___
4. Does the analyst have his/her own copy of the latest monthly QC plots?	(R)	___	___
5. Is the analyst aware of the most recent control limits?	(R)	___	___
6. Does the analyst have a copy of the most recent list of samples in-house to be analyzed?	(R)	___	___
Date of list _____			
7. Are all solutions properly labelled?	(R)	___	___
8. Is the "Standard Preparation Form" completed when new stock standards are prepared?	(R)	___	___
9 Are dilute calibration standards prepared fresh daily?	(R)	___	___
10. Is the analyst spike prepared fresh daily from an independent stock?	(R)	___	___
11 Is the calibration curve at least a five point curve?	(R)	___	___
12 Is the first calibration curve of the day checked for detection limit and linearity?	(R)	___	___
13. Are the analyst spike data calculated and plotted real time?	(G)	___	___
14. Is each new calibration curve checked to see that instrumental response changed less than 5%?	(R)	___	___
15. Are the following control samples analyzed with each run?			
Blanks	(R)	___	___
Old Samples	(R)	___	___
Analyst Spikes	(R)	___	___
Audit Spikes	(R)	___	___
16 Does the analyst review the quality control data sheet output by the data clerk, and then decide whether or not to release the data for reporting?	(G)	___	___
17 Is water pumped through all lines daily before and after analysis?	(G)	___	___
18 Are pump tubes changed at least once per three days?	(G)	___	___
19 Is the pump cleaned when the pump tubes are changed?	(G)	___	___
20 Is soap solution pumped through all lines once per week?	(G)	___	___
21 Is the flowcell cleaned with a sulfuric acid-potassium dichromate solution once per month?	(G)	___	___
22. Is the pump oiled once per three months?	(G)	___	___
Date of last service _____			
23. Is the colorimeter mirror assembly and color filter cleaned and the alignment optimized once per three months?	(G)	_____	
Date of last service _____			

Laboratory Operation

G. ANALYST - DIONEX _____

(Name)

		Yes	No
1. *Does the analyst have his/her own copy of the standard operating procedures?*	(R)	___	___
2. *Does the analyst have his/her own copy of instrument performance data?*	(R)	___	___
3. *Does the analyst have his/her own copy of safety instructions?*	(R)	___	___
4. *Does the analyst have his/her own copy of the latest monthly QC plots?*	(R)	___	___
5. *Is the analyst aware of the most recent control limits?*	(R)	___	___
6. *Does the analyst have a copy of the most recent list of samples in-house to be analyzed?*	(R)	___	___
Date of list _____			
7. *Are all solutions properly labelled?*	(R)	___	___
8. *Is the "Standard Preparation Form" completed when new stock standards are prepared?*	(R)	___	___
9 *Are dilute calibration standards prepared fresh weekly?*	(R)	___	___
10. ***If manual techniques are used, are samples and eluent prepared fresh daily from the same concentrated stock buffer?***	(R)	___	___
11. *Is the analyst spike prepared from an independent stock?*	(R)	___	___
12. *Is the calibration curve at least a four point curve for each analytical range?*	(R)	___	___
13. *Is the first calibration curve of the day checked for detection limit and linearity?*	(R)	___	___
14. *Are the analyst spike data calculated and plotted real time?*	(G)	___	___
15. *Are the following control samples analyzed with each run?*			
Blanks	(R)	___	___
Old Samples	(R)	___	___
Analyst Spikes	(R)	___	___
Audit Spikes	(R)	___	___
16 *Does the analyst review the quality control data sheet output by the data clerk, and then decide whether or not to release the data for reporting?*	(G)	___	___
17. *Is the drip tray examined daily for reagent spills, and are spills cleaned up daily?*	(G)	___	___
18. *Are pumps oiled once per week?*	(G)	___	___
19. *Is the anion precolumn cleaned once per month with 0.1 M* Na_2CO_3*?*	(G)	___	___
20. *Is the* Br^-, NO_3^- *resolution checked once a month and documented with a "Dionex Resolution Test Form"?*	(R)	___	___

Laboratory Operation

H. ANALYST - AA _____

(Name)

		Yes	No
1. *Does the analyst have his/her own copy of the standard operating procedures?*	(R)	___	___
2. *Does the analyst have his/her own copy of instrument performance data?*	(R)	___	___
3. *Does the analyst have his/her own copy of safety instructions?*	(R)	___	___
4. *Does the analyst have his/her own copy of the latest monthly QC plots?*	(R)	___	___
5 *Is the analyst aware of the most recent control limits?*	(R)	___	___
6. *Does the analyst have a copy of the most recent list of samples in-house to be analyzed?*	(R)	___	___
Date of list _____			
7. *Are all solutions properly labelled?*	(R)	___	___
8. *Is the "Standard Preparation Form" completed when new standards are prepared?*	(R)	___	___
9. *Are dilute calibration standards prepared fresh monthly?*	(R)	___	___
10. *Is the analyst spike prepared from an independent stock?*	(R)	___	___
11. *Is the instrument allowed to warm up at least 15 minutes with the flame on before the final wavelength adjustment is made?*	(R)	___	___
12. *Is the calibration curve at least a five point curve?*	(R)	___	___
13. *Is the first calibration curve of the day checked for detection limit and linearity?*	(R)	___	___
14 *Are the analyst spike data calculated and plotted real time?*	(G)	___	___
15 *Is each new calibration curve checked to see that instrumental response changed less than 5%?*	(R)	___	___
16. *Are the following control samples analyzed with each run?*			
Blanks	(R)	___	___
Old Samples	(R)	___	___
Analyst Spikes	(R)	___	___
Audit Spikes	(R)	___	___
17. *Does the analyst review the quality control data sheet output by the data clerk, and then decide whether or not to release the data for reporting?*	(G)	___	___

Laboratory Operation

I. DATA CLERK _____
(Name)

		Yes	No
1. Does the data clerk do a 100% QC check for accuracy of data input to the computer?	(R)	___	___
2. Does the data clerk routinely report quality control data sheet information to the analyst?	(R)	___	___
3. Does the data clerk submit quality control data sheet information to the lab manager along with the analytical data to be reported?	(R)	___	___
4. Does strip chart reduction by on-line electronic digitization receive at least 5% manual spot checking?	(R)	___	___
5 Are control charts or equivalent checks (e.g., computer calculated range limits or regression charts) current and available for inspection?	(R)	___	___
6. Are provisions made for data storage of at least 3 years for all raw data, calculations, quality control data and reports?	(R)	___	___
7 Do laboratory records include the following information:			
a. Sample identification number	(R)	___	___
b. Station identification	(R)	___	___
c. Sample type	(R)	___	___
d. Date sample received in laboratory	(R)	___	___
e. Time, date and volume of collection	(R)	___	___
f. Date of analysis	(R)	___	___
g. Analyst	(R)	___	___
h. Results of analysis (including raw analytical data)	(R)	___	___
i. Receptor of the analytical data	(R)	___	___
8. Are rain gauge chart data for event times and amount checked?	(G)	___	___
9. Does laboratory follow chain-of-custody procedures from sample receival to discard?	(G)	___	___
10. Are computer printouts and reports routinely spot checked against laboratory records before data are released?	(R)	___	___
11. Are manually interpreted strip chart data spot checked after initial entry?	(R)	___	___
12. Are minimum detection limits calculated by an approved method such as either Hubaux-Vox (Appendix A) or baseline standard deviation?	(R)	___	___
13 Are calibration curve coefficients tabulated and regularly reviewed as evidence for instrumental control? (An alternative is to use Regression-Hypothesis testing in lieu of control charting.)	(R)	___	___
14 Are control charts, regression charts or computer QC data bases up-to-date and accessible?	(R)	___	___
15. Has the data handling and reduction system been examined by legal counsel to determine the soundness of the system in possible litigation?	(G)	___	___

Laboratory Operation

J QUALITY CONTROL CHEMISTRY _____

(Name)

		Yes	No
1. Does the QC chemist have his/her own copy of the standard operating procedures?	(R)	___	___
2 Does the QC chemist have his/her own copy of instrument performance data?	(R)	___	___
3 Does the QC chemist have his/her own copy of safety instructions?	(R)	___	___
4. Does the QC chemist have his/her own copy of the latest monthly QC plots?	(R)	___	___
5. Is the QC chemist aware of the most recent control limits?	(R)	___	___
6 Does the QC chemist prepare a blind audit spike once per month?	(R)	___	___
7 Does the QC chemist routinely review and report blind audit spike data to the laboratory manager?	(R)	___	___
8 Does the QC chemist update control limits and obtain new control chart plots once per month?	(R)	___	___

K LABORATORY TECHNICIAN _____

(Name)

1 Are all containers washed before they are sent to the field?	(R)	___	___
2. Is the conductivity of the last rinse water measured for 10% of the washed containers?	(R)	___	___
3 If the conductivity of the rinse is greater than 2 μmhos/cm, is the container rinsed further?	(R)	___	___
4. After the containers and lids are dried are the containers capped immediately?	(R)	___	___
5 Are precautions taken not to touch the inside of the containers and lids?	(R)	___	___
6. Are all samples stored in a refrigerator when not being analyzed?	(R)	___	___
7 Are precautions taken not to breath on sample?	(R)	___	___
8 After completion of the analyses, are the samples stored in a refrigerator for a time period of at least six months?	(R)	___	___

LABORATORY MANAGER _____

(Name)

1 Does the laboratory manager have his/her own copy of the standard operating procedures?	(R)	___	___
2 Does the laboratory manager have his/her own copy of instrument performance data?	(R)	___	___
3 Does the laboratory manager have his her/own copy of safety instructions?	(R)	___	___
4 Does the laboratory manager have his/her own copy of the latest monthly QC plots?	(R)	___	___
5 Is the laboratory manager aware of the most recent control limits?	(R)	___	___
6 Does the laboratory manager review the following before reporting data:			
a. The data itself?	(R)	___	___
b. The quality control data sheet with analyst notes?	(G)	___	___
c. The quality control chemist blind audit data report?	(R)	___	___
d The ion summation ratios for the data?	(R)	___	___
e The calculated vs measured sample conductivity?	(G)	___	___

7.8 Data Forms

Forms for recording laboratory activities, including calibrations and QC procedures, are mentioned throughout Section 7 On the following pages, blank data forms are provided for the convenience of the manual user. Many of these forms are taken or adapted from EPA forms and from other sources. The title is at the top of each, as is customary for a data form To relate the form to the text, a form number (e g., 1.1/7.3 2) is in the lower right-hand corner; the 1.1 means form number 1, version 1, and the 7.3.2 means Section 7.3.2. A revision of the form would change the number to 1 2/7.3 2, or form 1, version 2, and so forth. The numbers and titles of the forms listed herein are listed below:

Form Number	*Title*
1.1/7.4.1	Field Conductivity Standard Form
2 1/7.4.2	Field pH Electrode Test Solution
3.1/7.5 1 1	Certification of Weights to NBS Form
4 1/7 5.1.1	Balance Calibration Log
5.1/7.5 3	pH, Conductivity and Gran Strong Acid Instrument Performance Form
6.1 /7 5 3	Precision Accuracy Instrument Performance Form
7 1/7 5 3	Precision Accuracy Instrument Performance Plot
8 1 /7.5 3	Instrument Performance Summary Form
9 1/7 6	Most Recent Monthly Control Limit
10 1/7.6	Audit Spike Recovery Data

7.9 References

1 *Quality Assurance Handbook for Air Pollution Measurement Systems, Vol. II - Ambient Air Specific Methods*, EPA - 600/4-77-027a, May 1977,. p 3-4 of 2.0.

2. *Handbook for Analytical Quality Control in Water and Wastewater Laboratories*, EPA - 600/4-79-019, March 1979, p 2-1 to 2-6.

3. Applebaum, S.B., and G.J. Crits, "Producing High Purity Water," Industrial Water Engineering (Sept./Oct. 1964); Karamina, N.A., Amer. Lab. 8 (3), 24 (1976).

4. *Reagent Chemicals, American Chemical Society Specifications,* 5th Edition, American Chemical Society, Washington, DC (1974).

5. "Standard Methods for Preparation, Standardization, and Storage of Standard Solutions for Chemical Analysis," from Part 31 of 1976 Book of ASTM Standards, American Society for Testing and Materials, Philadelphia (1977)

6. *Standard Methods for the Examination of Water and Wastewater,* 13th Edition, American Public Health Association, New York (1971)

7. Reichgott, M., "Organic Coatings and Plastic Chemistry," Vol. 41, 1979, Paper presented at 178th National Meeting of the American Chemical Society, Washington, D C. Sept 9-14, 1979.

8. *Operations and Maintenance Manual for Precipitation Measurement Systems,* United States Environmental Protection Agency, Research Triangle Park, N.C , (in press).

9 *United States Pharmacopeia,* United States Pharmacopeial Convention Inc , Rockville, MD., XIX, 644 (1975)

10. Peffer, E.L. and G.C. Mulligan, "Testing of Glass Volumetric Apparatus," NBS Circular 434, National Bureau of Standards (1941).

11. Electric Power Research Institute, "Acid Precipitation in the Eastern United States," Contract Nos. RP1376-1 and RP1630-2, Rockwell International Environmental Monitoring and Services Center (1978-1980).

12. Gran, G., Analyst *77*, 661 (1952).

13. Method 350.1 from *Methods for Chemical Analysis of Water and Wastes,* EPA-600/4-79-020, March 1979.

14. Method 365.4 from *Methods for Chemical Analysis of Water and Wastes,* EPA-600/4-79-020, March 1979.

15. Hubaux, A., and G. Vos, Anal. Chem., *42,* 849 (1970).

16 Peden, M.E., and L.M Skowron, "Ionic Stability of Precipitation Samples, Atmos Environ., *12,* 2343 (1978).

17 Rothert, J.E., Battelle Pacific Northwest Laboratories, Richland, Washington, MAP3S Program, private communication.

18. Peden, M.E., L.M. Skowron and F.F. McGurk, "Precipitation Sample Handling, Analysis, and Storage Procedures," United States DOE, Pollutant Characterization and Safety Research Division, Contract No. EY-76-S-02-1199, Research Report 4, COO-1199-57 (1979).

19. *Manual on Industrial Water and Industrial Wastewater, 2nd Ed.,* ASTM Special Publication 148-H, American Society for Testing and Materials (1965), p869.

Field Conductivity Standard Form

Date of Preparation of
O.IM KCl Stock Solution _____

Date of Preparation of
Dilute Field Standard . _____

_____
(Analyst Signature)

Laboratory Analysis Before Shipment to the Field

1 _____

2 _____

3 _____

Average Cond
± Std Dev _____

Laboratory Values After Use In The Field.

Field Site #	*Date of Lab Analysis*	*Lab Value (μmhos/cm)*

Field pH Electrode Test Solution

Date of Preparation of Stock Solution _____ _____ *(Analyst Signature)*

Volume of Stock Taken _____

Final Dilution Volume of Field pH Electrode Test Solution _____

Laboratory Analysis Before Shipment to the Field

	Conductivity	*pH*
1.		
2.		
3.		

Ave. ± Std. Dev. _____

Laboratory Analysis of Aliquots Returned From the Field

	Field pH Values	*Lab Values After Return*			
Site #	*Ave. ± Std. Dev. (data)*	*Date of Analysis*	*pH*	*Cond.*	*Anal. Init.*

Certification of Working Weights to NBS Form

Date of Certification _____

Weight Set Serial # _____

_____
(Analyst Signature)

Balance 0	_____	*Balance 0*	_____
NBS 1kg	_____	*NBS 1kg*	_____
NBS 5kg	_____	*NBS 5kg*	_____
Test 1kg	_____	*Test 1kg*	_____
Test 5kg	_____ ***	*Test 5kg*	_____ ***
Balance 0	_____	*Balance 0*	_____
NBS 1kg	_____	*NBS 1kg*	_____
NBS 5kg	_____	*NBS 5kg*	_____
Test 1kg	_____	*Test 1kg*	_____
Test 5kg	_____ ***	*Test 5kg*	_____ ***
Balance 0	_____	*Balance 0*	_____
NBS 1kg	_____	*NBS 1kg*	_____
NBS 5kg	_____	*NBS 5kg*	_____
Test 1kg	_____	*Test 1kg*	_____
Test 5kg	_____	*Test 5kg*	_____

Summary

	Average = *Standard Deviation*
Balance 0	_____
NBS 1kg	_____
NBS 5kg	_____
Test 1kg	_____
Test 5kg	_____

Balance Calibration Log

Balance ID Number	Date	Test Weight #1		Test Weight #2		Test Weight #3		Analyst Initials
		Known Mass	Mass Found	Known Mass	Mass Found	Known Mass	Mass Found	

pH, Conductivity, and Gran Strong/Total Acid Methods Validation Form

Conductivity:

Date of Test _____

Date of Solution Prep. _____

Concentration HCl (M)	Expected Conductivity	Conductivity Found 1	2	3	4	5	Avg	Std. Dev.	% Recov.	% Std. Dev.
	µmhos/cm									
H_2O[a]	1									
10^{-6}	0.43[b]									
10^{-5}	4.26[b]									
10^{-4}	42.44[b]									
10^{-3}	421.0[b]									

pH

Date of Test _____

Date of Solution Prep. _____ *Date of 4 M KCl Solution Prep.* _____

Concentration HCl (M)	Expected pH	pH Found 1	2	3	4	5	Avg.	Std. Dev.
H_2O[a]	7.08							
10^{-6}	6.08							
10^{-5}	5.08							
10^{-4}	4.08							
10^{-3}	3.08							

Calculated Acid Concentration From pH(above):

Date of Test _____

Date of Solution Prep. _____

Concentration HCl (N)	Acid Conc. Obtained from pH (N) 1	2	3	4	5	Avg	Std. Dev.	% Recov	% Std. Dev.
H_2O[a]									
10^{-6}									
10^{-5}									
10^{-4}									
10^{-3}									

Gran Strong Acid:

Date of Test _____

Date of Solution Prep. _____

Concentration HCl (N)	Concentration Obtained (N) 1	2	3	4	5	Avg	Std. Dev.	% Recov.	% Std. Dev.
H_2O[a]									
10^{-6}									
10^{-5}									
10^{-4}									
10^{-3}									

[a] *An aliquot prepared as the samples, but containing no acid.*
[b] *Corrected for conductivity of water*

Precision-Accuracy Instrument Performance

Conc. Taken (µg/ml)	Instrumental Response				
	Curve 1	Curve 2	Curve 3	Curve 4	Curve 5
Curve[b] Parameters					
Slope					
Intercept					
Error					
Corr. Coef					
Det. Limit					

Species: _____

Date. _____

Scale[a]: _____

_____
(Analyst Signature)

Curve Parameters Overall[c]

Slope: _____

Intercept: _____

Error: _____

Correlation Coef: _____

Detection Limit: _____

Average ± Standard Deviation	Control Limit[d]
_____	
_____	
_____	
_____	
	_____

Regression Concentration[e]

Conc. Taken (µg/ml)	Curve 1	Curve 2	Curve 3	Curve 4	Curve 5	Average Conc. Found	Standard Deviation	% Recovery	% Std. Dev.

[a] *For Dionex, indicate approximate µmho/cm full scale (µmho/cm scale x volts on recorder); For AA, indicate scale expansion; For Technicon, indicate method and flowcell length.*

[b] *The curve parameters are calculated using the linear squares fit of Appendix C*

[c] *From a linear least squares fit of all data points*

[d] *This is the average value + 3x(standard deviation)*

[e] *This is calculated from the instrumental responses given above, using the "Curve Parameters Overall".*[c]

Precision-Accuracy Instrument Performance Plot

Species _____ *Plot* _____

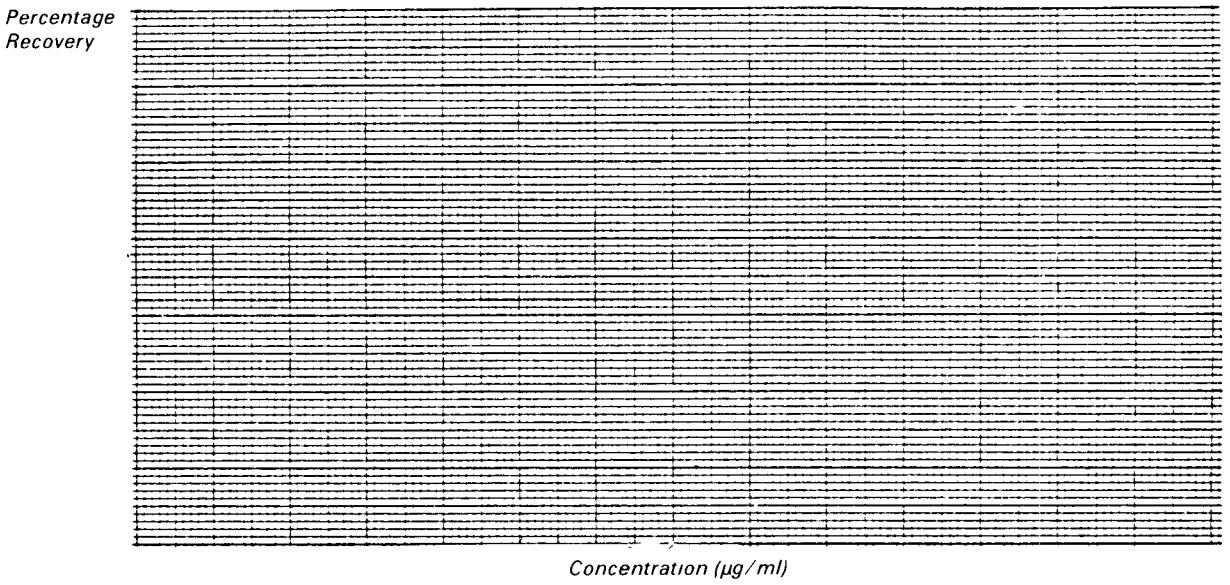

Figure 1. *Percentage recovery as a function of concentration*

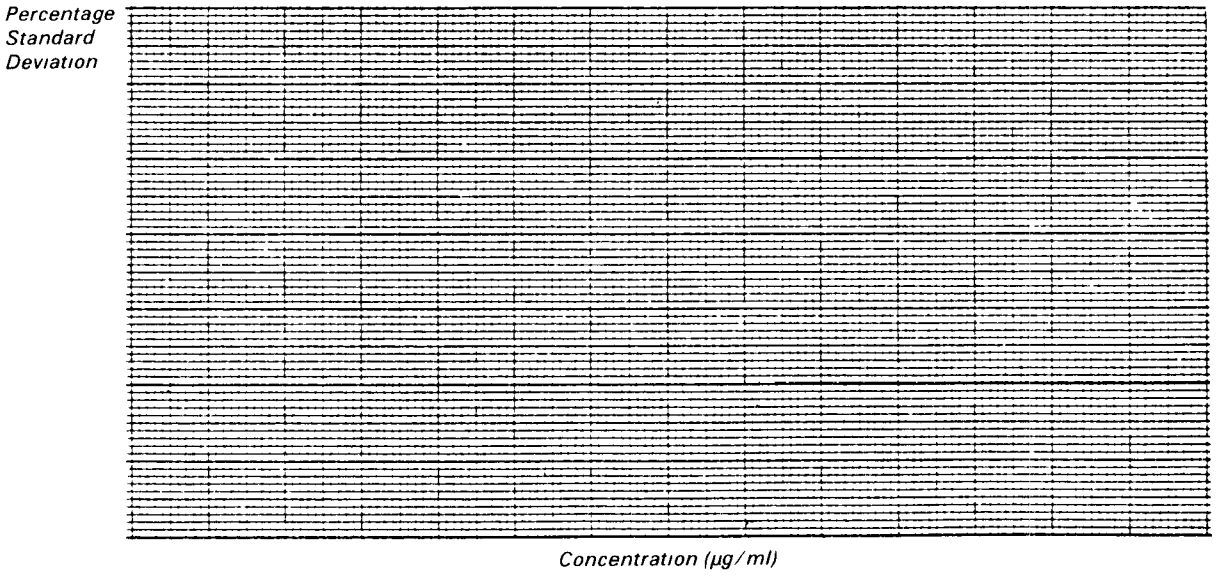

Figure 2. *Percentage standard deviation as a function of concentration*

Instrument Performance Summary Form

Species	*Date of Test*	*Concentration Above Which 10% Precision is Obtained (μg/ml)*	*Average Detection Limit ± Standard Deviation (μg/ml)*	*Average Detection Limit x 3x (Standard Deviation) (μg/ml)*	*Analyst Initials*

Date: _____

Most Recent Monthly Control Limits

Instrument	Species	Anal. Range#	Full Scale Std. Conc	Date Control Limits Est.	Curve Error	Curve Det Limit	Dup Sample[a] Diff.	Old Sample Diff.	Blank Magnitude	Analyst Spike LCL	Analyst Spike UCL
Dionex	Cl^-	1									
		2									
		3									
	NO_3										
		1									
		2									
		3									
	$SO_4^=$										
		1									
		2									
		3									
Technicon											
	NH_4^+	1									
		2									
		3									
	$PO_4^{\equiv}$										
		1									
		2									
		3									
Atomic Absorption	Na^+	1									
		2									
		3									
	K^+	1									
		2									
		3									
	Ca^{++}	1									
		2									
		3									
	Mg^{++}	1									
		2									
		3									
Gran Strong Acid	H^+										
Gran Total Acid	H^+										
pH	H^+										
Conductivity											

[a] *If duplicate field samples are taken*

B Audit Spike Recovery Data[a] *Month:* _____

Instrument	*Species*	*Conc Taken*	*Date of Analysis*	*Conc. Found*	*% Rec*	*Date of Analysis*	*Conc. Found*	*% Rec*	*Date of Analysis*	*Conc Found*	*% Rec*
Dionex	Cl^-										
	NO_3^-										
Dionex	$SO_4^=$										
Technicon	NH_4^+										
Technicon	$PO_4^{\equiv}$										

[a] *Indicate data points out of limits by * in % Rec. Column.*

Audit Spike Recovery Data[a] (Cont'd) *Month.* _____

Instrument	*Species*	*Conc. Taken*	*Date of Analysis*	*Conc. Found*	*% Rec*	*Date of Analysis*	*Conc Found*	*% Rec*	*Date of Analysis*	*Conc Found*	*% Rec*
Atomic Absorption	Na^+										
Atomic Absorption	K^+										
	Ca^{++}										

[a] *Indicate data points out of limits by * in % Rec. Column*

Audit Spike Recovery Data[a] (Cont'd) *Month:* _____

Instrument	*Species*	*Conc. Taken*	*Date of Analysis*	*Conc. Found*	*% Rec.*	*Date of Analysis*	*Conc. Found*	*% Rec.*	*Date of Analysis*	*Conc. Found*	*% Rec.*
Atomic Absorption	*Mg^{++}*										
pH Meter	*pH*										
ph Meter	*Gran Strong Acid*										

[a] *Indicate data points out of limits by* in % Rec. Column.*

Audit Spike Recovery Data[a] (Cont'd) *Month* _____

Instrument	*Species*	*Conc. Taken*	*Date of Analysis*	*Conc. Found*	*% Rec*	*Date of Analysis*	*Conc Found*	*% Rec*	*Date of Analysis*	*Conc Found*	*% Rec*
	Gran Total Acid										
Conductivity											

[a] *Indicate data points out of limits by* in % Rec. Column.*

8.0 Handling, Validation, and Reporting

Quality control of data handling and other aspects of analysis and reporting are part of data management activities, and require discussions of the following: calculating detection limits, spot-checking and screening for accuracy of data entry, reporting formats, calculating of averages and statistics for cumulative reports, and classifying and handling outliers.

Data obtained in the field and in the analytical laboratory must be validated and quality controlled to assure that they accurately represent the concentrations of the the sample constituents Validity depends on control of error and bias during all phases of data handling from analytical results to final reporting.

8.1 Data Logistics

Involved with data acquisition, reduction, and reporting are the field operator, the analyst, the data entry staff, the laboratory director, the program manager (or project engineer), and the designated QA coordinator.

Ideally, laboratory data should go directly from an instrument to a machine readable raw data base to avoid human transcription errors. Because not all laboratories have computer facilities, manual data-recording techniques are discussed, but all calculations and data-processing steps in this section can be performed by automated processing.

If voltages from the instrument are not recorded automatically, a data form must be prepared. Each analyst should keep a bound notebook to record all analytical data; this notebook should have carbons so copies can be pulled for data reduction. Typical data forms are in the O & M manual(1) for each analytical procedure and blank forms are in Section 7.8 and 8.8

Whenever data forms are prepared from strip charts, transcriptions should be checked by reprocessing 10% of all values; if errors are found, all data should be reprocessed.

The sections below briefly describe manual data-recording practices for several typical techniques used in precipitation analysis.

8.1.1 *pH and Conductivity*

The pH and conductivity measurements read directly from meters are recorded on a prepared data form. Meter readings are recorded instead of "peak height." Baseline readings are ignored.

8.1.2 *Anion Chromatography for Chloride, Phosphate, Nitrate, and Sulfate*

Peak heights on strip charts are a measure of response. Draw baselines, read each peak height from the baseline with a clear plastic ruler, and record each peak height on the strip chart and also on the data form Because this is a chromatographic technique, care must be exercised in drawing the baseline.

8.1.3 *Automated Colorimetry for Ammonium and Phosphate*

Read the data on the strip charts as steady-state voltage peaks, draw a straight line between baseline points on the chart, read each peak height from the baseline using a clear plastic ruler, and record the peak heights on the strip chart and on the data form

8.1.4 *Atomic Absorption for Sodium, Potassium, Calcium, and Magnesium*

Process the data the same as for automated colorimeter (Section 8.1.3).

8.1.5 *Strong Acid by Gran Method*

In the microtitration, electrical potential (mv) or pH is recorded as a function of the volume of base added to the sample As a QC procedure, the initial potential reading of the conditioning solution, before addition of sample, is recorded on the data form (Section 8 8) and the final temperature before titration should also be recorded.

8.1.6 *Acidity*

The sample is titrated potentiometrically with a basic solution to an end point of pH 8 3 The normality (N) of the base and the volume (ml) required are recorded on the data form.

8.1.7 *Volume*

In determining the amount of sample precipitation, assume a density of 1.0 gm/ml; thus the ratio of mass (gm) to volume (ml) is 1.0. Record the mass directly on the data form.

8.2 Field Observation Coding

Encode field observations of weather, sample condition, sampler, and other relevant data into computer files or onto summary forms in a standard format for ease of interpretation. A six-digit code is most convenient to summarize weather conditions, sample conditions, and equipment conditions:

Weather codes aa include.

- 00 no event
- 01 rain
- 02 snow
- 03 mixed snow/rain

Samples codes bb include·

- 00 sample intact
- 01 sample contaminated (unspecified cause)
- 02 Noticeable suspended particles
- 03 sample leakage in shipment
- 04 insufficient sample for complete analysis

Equipment codes cc include·

- 00 no equipment problems
- 01 sampler inoperative or malfunctioned (no/or negligible sample)
- 02 rain gauge inoperative or malfunctioned
- 03 field pH and conductivity measured late (x days after scheduled sample removal)
- 04 pH/conductivity meters inoperative

For example, a mixed rain/snow sample with noticeable particles and no equipment problems would be coded 030200.

8.3 Software Requirements

Data handling from raw data input through finished report, should be computerized as much as possible. Figure 8-1 shows typical data flow from chemical analysis through final QC reporting The software has several basic functions:

Data input (Section 8.3.1)
Calculation of concentrations from raw data and calibrations (Section 8.4.2)
Data storage and indexing (Section 8.3 2)
Control charts and related tests (Section 8.4.4)
Data output and reporting (Section 8.6)

8.3.1 *Data Input*

Data can be input in two ways, manually or on line. For manual data entry, the data clerk should screen all of the terminal input by manual comparisons of the computer printout with the original data forms or by duplicate entries. For automated on line entries, errors can usually be detected by software reasonableness checks, by monitoring data display while data are being taken, and by occasional spot-checks or audits of data acquisition apparatus.

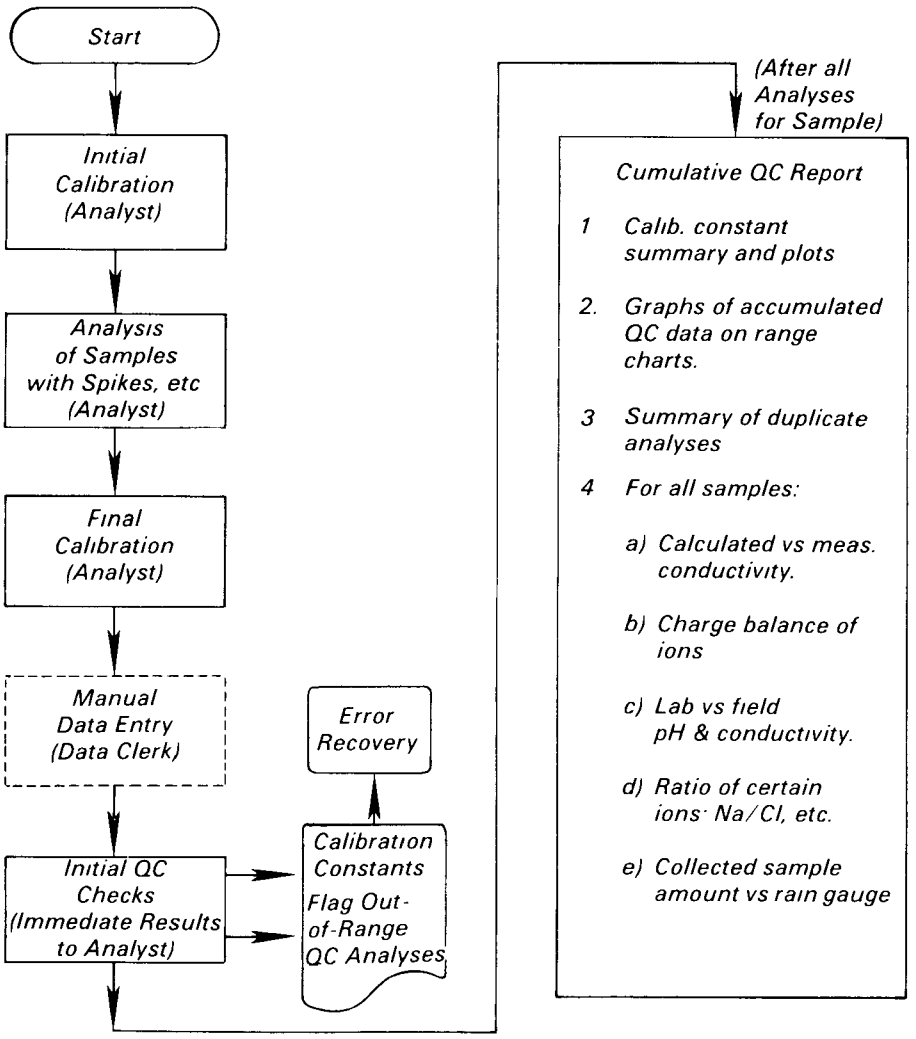

Figure 8-1. *Typical scheme of analysis and QC functions.*

8.3.2 *Data Storage and Indexing*

At a minimum, large data bases should be stored on a computer readable medium (e g , disk, tape or cassette) which can be accessed efficiently A duplicate backup file stored in a different location should be maintained. Special file attributes (e g , random access, keys, and indexing) can be useful for efficient data management. Where elaborate file organization with high capacity on-line storage devices are available, the following data organization is recommended

Main Data File(s) - raw (concentration) data with appropriate retrieval keys.
Duplicate File - for backup
Index File(s) - data for cross-referencing site, date of sampling, etc , with data in main data file.
QC File - calibration constants, control limits, and QC sample data (spikes, blanks and duplicates); indexing, by site and date with cross-reference to the raw data to which the QC data pertain, is desirable.

8.3.3 *QC Functions*

A computer enables extensive automation of QC functions One valuable function is immediate flagging of error conditions· spike data which are out of control, data which are below detection limits; and calibration constants which are out of tolerance. Software avoids tedious control chart plotting and much manual mathematical labor Equations and criteria for data flagging have been described (4, Appendixes E & H).

8.4 Data Handling and Statistical Analysis of Data

In an acid precipitation monitoring network, data handled both in the field and in the laboratory must be critically reviewed to identify and isolate errors. Data should be validated at each step of the measurement process—beginning with sample validation in the field and followed by a preliminary physical screening process when the sample is received from the field. After data enter the storage-retrieval system, a more detailed screening process is taken All procedures should be well documented so that new personnel can easily understand them

In establishing statistical screening procedures, it is necessary to recognize characteristics of the chemical analyses For the most part, analyses are done in a batch mode with multipoint calibrations run before and after the samples, which may total several dozen In an efficiently run laboratory, most analyses are automatically sequenced with data recorded continuously on strip charts or by computer As discussed in Sections 7 5 and 7 6 on chemical analyses, ion chromatography measures several constituents in the same analysis

8.4.1 *Quality Control of Data Handling*

Table 8-1 summarizes the data handling steps and the QC to be applied at each step A range check is sometimes effective as an additional screen against keypunch errors

8.4.2 *Calculations*

Calibration standards should be run as spikes and blanks at the beginning and end of the analysis and periodically during the analysis Sample data are calculated from linear least squares fit parameters of the bracketing calibration standards, equations used for these calculations are available in most elementary statistics books(2)

The linear least squares fit yields the following parameters slope (m), intercept (b), error of fit (e), correlation coefficient (r), and the detection limit (dl) The slope and intercept define a relationship between concentration standards and instrument response

$$Y_{pi} = mx_i + b \qquad 8\text{-}1$$

where Y_{pi} = predicted instrument response (not y_{ai}, actual instrument response), and

x_i = concentration of standard i.

Equation 8-1 is the preferred fit where major components of random variance are assumed to be in instrument response. Rearrangement of Equation 8-1 yields concentration corresponding to an instrumental measurement

$$x_j = (y_{aj} - b)/m \qquad 8\text{-}2$$

where x_j = calculated concentration for a sample,

Y_{aj} = actual instrument response for a sample, and

Table 8-1. Suggested QC Spotcheck of Data Handling

Data Handling Step	*QC Procedure*
Manual reading of strip chart	*Check 10% of data*
Transfer of analysis results to data sheet.	*Check 100% of data*
Input of data (field or analytical form) into computer	*Check data printout 100% vs raw data form*
Electronic digitization of strip chart	*Check 5 to 8% for baseline and timing*
Field report records of event time and amount	*Check 100% vs rain gauge strip chart*

m and b = calculated slope and intercept from the latest calibration standards run.

The error term is calculated from the difference between the predicted instrument response y_{pi} and the actual instrument Y_{ai} response for a given calibration standard.

$$e = [(Y_{ai} - mx_i - b)^2/(n-2)]^{1/2} \quad 8\text{-}3$$

where n = number of calibration standards.

This term, which indicates how much random scatter is in the calibration, has the same units as the y variable (instrument response), and thus should be directly compared between calibrations only when all setup parameters (scale factor, concentration range, etc) are identical.

The correlation coefficient, a measure of how much of the variation in instrument response is explained by differences in concentration (as opposed to pure random variation), is discussed in elementary statistics texts(2)

8.4.3 *Statistical Evaluation Techniques*

Sampling is assumed to collect single (not duplicate) samples for most precipitation events so 100% QC of each sample cannot be attained; however, with QC procedures addressed to each analysis batch, good screening of proper instrument functioning can be achieved. The following discussions present statistical checks available under the constraints of non-duplicate sample collection. Table 8-2 summarizes available QC statistics.

8.4.3.1 Calibrations—In addition to a mathematical estimate of the relationship between instrument output signal and concentration (by regression curve), calibration provides statistics for evaluating the analytical method. Duplicate calibrations, before and after analysis of field samples, yield data on instrument reproducibility and drift Statistics from routine calibration data include:

Mimimum Detection Limit - A conservative method (e.g., Hubaux and Vos, Appendix B (3)) yields the detection limit as a function of the quality of the linear least squares fit of the calibration data. Comparison of the detection limit calculated from each day's standardizations with the one for the technique and range determined during instrument documentation may indicate problems with technique.

Slope and Intercept - The slope and intercept of the least squares fit of the data for a technique and instrument range are fairly constant Visual inspection of values from successive days or comparison with values obtained during the method validation can be used for quality control

Correlation Coefficient - This easily calculated statistic r is often used in a semi-quantitative way to evaluate goodness of fit of the relation of one variable with respect to another Values near +1.0 and -1.0 are good and values near 0 are poor. The actual range of good fit values will depend on the particular measurement or test. The value can be used as a more quantitative measure in two ways. First, r^2 is equal to the fraction of total variance s^2 (s = standard deviation) due to the correlation of the tested variables; the balance is due to random error. Second, r together with sample size n can be used to calculate the 95% confidence limits of the derived slope of the linear relation between the tested variables (2).

Residual Error - The scatter of data points off the regression line is a measure of "noise" in the calibration, and it is related to expected precision of the analysis

8.4.3.2 Spikes and Blanks—If the experimental design calls for only one analysis of nonduplicate field samples, the primary tool for monitoring the integrity of the analysis is the occasional insertion of spikes of known concentrations. If calibrations are done before and after each batch of samples, the QC samples of known value should be near the middle of the batch for optimum control. If the final calibration is omitted, a QC spike and blank should be the last samples analyzed. The concentration values of the spikes should be entered into the computer before analysis, so that control limits can be checked as the analysis results are keyed into the computer If control limits are exceeded, there should be an immediate report by the QC coordinator to the laboratory director If no computer is available, the laboratory director, QC coordinator, or analyst should check the spike results immediatley to determine if an out-of-control condition exists.

8.4.3.3 Old Samples—Another control check is reanalysis of old samples to obtain information on sample stability, which varies from sample to sample the H^+, NH_4^+, and NO_3^- are susceptible to degradation; if degradation is observed, the sample handling and preservation techniques should be examined. If degradation is not observed (i.e. agreement is good), old sample data can be used to calculate the precision of analysis. The precision may vary from day to day.

8.4.4 *Control Charts and Related Tests*

With control charts, QC data are tabulated and plotted as functions of time; the abscissa is the chronological order of analysis, and the ordinate may be either the range, absolute magnitude, value of the difference of replicates, or percentage recovery. All data are plotted. An expected value and control limits are calculated, and these are plotted as the average-value line and the control limit lines. Table 8-3 shows types of data which are quality controlled using the control chart. Other EPA publications (4-Appendix H,5) give details of chart construction.

Table 8-2. Quality Control Data

Type of Information	*Data Evaluated*
1. Calibration Curve	
Slope (m)	*Not charted*
Intercept (b)	*Not charted*
Error (e)	*Calculated magnitude*
Correlation coefficient (r)	*Non-Gaussian, not used for QC*
Detection limit (dl)	*Calculated magnitude*
2. Blank	*Calculated magnitude*
3. Spike sample	*Percent recovery*
4. Old sample	*Difference between old and new values*

Table 8-3. Types of Data Controlled by Controlled Chart Methods

Type of Data	*Value Plotted*	*Expectation Value*	*Control Limits*
Duplicate Difference	*Absolute Value of Difference* $\lvert d_i \rvert$	*Mean Difference from method validation or other historical data base,* $\lvert \bar{d} \rvert$	*Lower limit - 0* *Upper limit -* $\lvert \bar{d} \rvert + ZS$
QC spike	*Percentage Recovery, X*	*100%*	*lower limit - 0 or 100 · (1-ZS)* *Upper limit (1+ZS) · 100*
QC Blank	*Calculated Magnitude*	*0*	*Lower limit - none* *Upper limit - dl*

d_i - *Individual duplicate difference*
$\lvert \bar{d} \rvert$ - *Mean of absolute value of duplicate differences*
Z - Coefficient from distribution tables for any specified level of precision ((2) and Appendix H of (4)).
S - Estimate of standard deviation from the historical data base
dl - Detection limit

Computer calculation and data evaluation with or without plotting may be substituted for manually plotting the data. Because the purpose of control charts is to flag potential problems as soon as possible, a computer can be easily programmed to recognize control criteria without having to plot the data manually. In either case, the control chart results should be correlated as soon as practical after an analysis to expedite corrective action.

Any control situation unlikely to occur statistically should be examined without delay. Many of these occurrences may be due to chance rather than to technical problems with the analysis Two types of limits are frequently defined:

Control Limits - the 3s deviation from the mean value, where s is estimated standard deviation for technique and concentration range; thus the upper control limit (UCL) is u + 3s (u is mean or expected value of the charted parameter), and the lower control limit (LCL) is u - 3s (or 0 if the calculated value is negative) Setting limits at ±3s implies that less than 2% of valid data are flagged due to random error alone and that other flagged data may be assumed to indicate nonrandom error, i.e., malfunction or contamination.

Warning Limits - The ±2s deviations from the expected value of the control parameter include about 95% of the expected random variation about the mean However, simple probability would predict less than 1% probability of two independently chosen values for the charted parameter to exceed the upper (UWL) or the lower (LWL) warning limits due to chance alone; thus two successive values which exceed one or the other (not both) warning limits should be reason for investigation of analytical control.

A final control applied in control charting is testing for a number of successive points which lie uniformly on one side of the expected value. Probability predicts less than 1% chance of eight independent consecutive values occurring on the same side of the mean value line, so eight or more would indicate a small systematic bias in the technique that may not be observed until after many days of analysis because of the relatively large number of points required.

8.5 Data Validation Criteria

Data validation based on a set of criteria is the process of filtering the data and either accepting or rejecting them. All procedures in this section are applied after data are first obtained to identify and flag questionable data for subsequent investigation. Validation includes investigation of apparent anomalies.

8.5.1 *Least Squares Fit of Calibration Curves*

As a QC function, calibrations are analyzed for excessive scatter from the fit line and for anomalous intercepts Cumulative records on each analyte concentration range and method allow the laboratory director to examine trends or discrepancies in coefficients and standard deviations of fit

8.5.2 *Control Limit Checks*

To know if inputs from an analysis batch are valid, it is necessary to know as soon as possible after analysis if control limits were exceeded on the known QC samples that were analyzed with the unknown samples

8.5.3 *Detection Limit Checks*

Of immediate value to the analyst is notification that a sample is below the detection limit of the measurement range. Ideally, this knowledge should be available immediately after raw data entry, then the analyst has two options.

1. Reanalyze the sample on an instrument scale of greater sensitivity
2. Improve the sensitivity (as calculated by Hubaux-Vos(3)) by multiple measurements of the unknown, by judicious choices of concentration values for the standard curve, or by use of another analytical technique If a sample is below all detection limits and cannot be reanalyzed because of lack of material or cost of reanalysis, a flag should be entered into the data base indicating that the datum is below the detection limit. With a fully automated system, this flagging could serve as an additional QA procedure because the analyst cannot mistakenly enter data below the detection limit if the computer program is written to reject all such data Statistical handling and reporting of below-detection-limit data are discussed in Section 8.6.4

8.5.4 *Inconsistencies in Precipitation Collection Results*

Stations equipped with duplicate samplers or with a sampler and a rain gauge can test data quality by checking the quantity of precipitation measured by the two instruments Amounts of rain which differ by more than 15% from a duplicate should be flagged for investigation of faulty function. To compare the amounts collected by samplers and by rain gauges, convert the sampler weight to inches by multiplying the weight (grams) by 0.00058 in./gm. However, compare carefully because light rainfalls generally yield high weighing rain gauge capture vs the sampler, and heavy rainfalls (and wind) yield high sampler capture vs. tipping bucket gauge. Differences of 30% between the sampler and the rain gauge are frequent, for snow, much greater differences can occur. It has been suggesed by MAP3S personnel, if the ratio (rain gauge - sampler volume) /rain gauge is greater than 0 5, reject the sample; if the sampler volume is greater than the rain gauge volume, use the sampler volume for calculations. The reason for the difference in sample amount captured by the rain gauge and sampler must be resolved before a recommendation is made.

As an additional check on data validity, the stripchart record of the precipitation gauges should be compared with the field data form. If discrepancies in time of event or precipitation amount are noted, they must be resolved before the data can be reported.

8.5.5 *Unusual Ion Ratios*

Another check on data validity is subjective analysis of the ratios of ions in individual samples. Table 8-4 shows average and typical ion weight ratios for terrains and locations. Average values for sea water(6) should apply to most areas(7), but those for the earth's crust(6) cannot be assumed to represent any specific region. The range data (last column) were taken from a 1968 national study(8). Significant departures from these or from typical ratios for the area are reasons for laboratory director to investigate an individual sample or an entire analytical procedure. The seawater ratio of $SO_4^=/NA^+$ is in the table so that measured $SO_4^=$ values can be corrected for seawater contribution; this ratio is preferred so SO_4/Cl because there are nonsea sources of Cl^- and because loss of atmospheric Cl^- can occur by oxidation. In contrast, the chief source of Na^+ is the ocean except in arid areas (e.g., southwestern United States)

8.5.6 *Comparison of Anion and Cation Equivalents*

The principle of electroneutrality requires that total anion equivalents equal total cation equivalents. For the EPRI Acid Precipitation Study(9), the term [cations - anions]/0.5[anions + cations] averaged 0.21±0.30. The greatest spread in data occurred at low concentrations; for concentrations above 100 microequivalents, the average was 0.18±0.22. Discrepancy from zero and the variation suggest that errors exist in the data and/or that important constituents (e.g., HCO_3^-, organic anions) have not been analyzed. (For solutions with pH below 5.0 at normal ambient conditions, the HCO_3^- concentration is negligible.) The anion/cation ratio criterion is in Table 8-4.

8.5.7 *Comparison of Measured and Calculated Conductances*

For dilute solutions (e.g., below 10^{-3} M) of known composition, the equivalent conductance is the sum of the equivalent ionic conductances $_i$ in the solution at infinite dilution (Table 8-5). From the relations between the equivalent Λ and the specific conductance

$$\Lambda = 1000\kappa/N \qquad 8\text{-}4$$

Thus

$$\kappa = N_i\Sigma_i\lambda_i/1000 \qquad 8\text{-}5$$

Table 8-4. Ion Ratios for Various Sources

Ratio	Primary Source	Average Value(6)	Rainwater Source	Acceptable Range (8) (ug/ug)
Σ Anions/ Σ Cations[a]				0.50 - 1.20[d]
Cl^-/Na^{+b}	seawater	1.8	industrial area	1.8 - 3.5
			seacoast	1 5 - 1.8
	earth's crust	0.01	arid region (soil particles)	0.8 - 1.0
Na^+/K^{+b}	seawater	27.8	seacoast	6 - 13
	earth's crust	1.1	inland	1.2 - 4
Mg^{++}/Ca^{++b}	seawater	3.2	seacoast	0.1 - 1.0
	earth's crust	0.6	inlar	0.03 - 0.3
$SO_4^=/Na^{+c}$	seawater	0.25	seacoast	0.25

[a] *Do not test if analyses of chief constituents incomplete.*
[b] *Do not test if either number is negative (i.e., if data less than Hubaux-Vos d.l.(3))*
[c] *To correct $SO_4^=$ for seawater $SO_4^=$ contribution.*
[d] *microeq/microeq*

Table 8-5. Equivalent Conductance at Infinite Dilution, 25°C

Ion	λ_i (mho/cm)	Ion	λ_i (mho/cm)
H^+	350.0	½ $SO_4^{=a}$	79.0
NH_4^+	74.5	NO_3^-	70 6
Na^+	50.9	Cl^-	75.5

[a] ½ = value for 1 g. eq.

where $N_i = z_iM_i$
= g. equivs. of ion i/liter,
M_i = g. moles of ion i/liter, and
z_i = valence or charge of ion i

With Equation 8-5 and Table 8-5, the calculated specific conductance of a solution containing

$H^+ = 7\times10^{-5}$ mol/liter,
$NH_4^+ = 4\times10^{-5}$ mol/liter,
$SO_4^= = 4\times10^{-5}$ mol/liter, and
$NO_3^- = 3\times10^{-5}$ mol/liter.

is

$$1000\kappa = 7\times10^{-5}(350)+4\times10^{-5}(74.5)+2(4\times10^{-5})(79.0)+3\times10^{-5}(70.5) = 3592\times10^{-5} \text{ mho/cm}$$

or

$$\kappa = 35.9 \text{ micromho/cm.}$$

The calculated specific conductance value can be compared with the measured values for precipitation samples, which are generally 10^{-4}M or less.

For the EPRI study(8), the difference between the calculated and measured conductances averaged about 22.5%, with the measured values being lower. These results are consistent with the anion/cation results, and probably are due to measurement error, to concentration changes in the time interval between the conductivity measurement and the analysis, to analysis error or nonmeasurement of a constituent, or to a combination of these. The H^+ ion is the chief contributor to the conductance of the solution, and any significant error in the H^+ concentrations will generally be evident in a comparison of the conductances and of the anion/cation equivalents.

8.6 Data Reporting

Data reporting should include a hardcopy printout, a computer tape, and a calendar of events (precipitation) at each site. This section does not address data interpretation (Section 8.7) or advanced computation.

8.6.1 *Calendar of Events*

A typical calendar of events for nine stations is shown in Figure 8-2. The codes R, S, M, and X denote rain, snow, mixed (liquid and solid phases), and missed samples.

8.6.2 *Entities and Units Reported*

Generally, the entities measured directly and reported are pH, specific conductance, concentrations of major constituents, and the amount of precipitation. Cumulative amounts of constituents deposited and average quantities or concentrations for various

JANUARY 1980

SITE #	1	2	3	4	5	6	7	8	9	10	11	12	13	14	15	16	17	18	19	20	21	22	23	24	25	26	27	28	29	30	31
11											R											R									
21											R			R						X											
31				M	S		R					R			R			R				R									
41				S						R						R									S						
52			M							R	R					R															S
61			R				R				R	R				R		R					R	R						M	S
72					X						R		M			R									S						
82				M			R	R			R			R			R					R					R				S
91			S										S				R				M		M								

FEBRUARY 1980

SITE #	1	2	3	4	5	6	7	8	9	10	11	12	13	14	15	16	17	18	19	20	21	22	23	24	25	26	27	28	29
11								X								S						S							
21															S							R							
31							S		S						R							R	M		M			R	
41												M			M						R							S	
52					S										R									R		S			
61					M			M	M						R				R							M			
72					S				S						S							M				S		S	
82						S			M							R				R	R					M			
91										S					S					R		R	R		S			S	

R = Rain
S = Snow
M = Mixed (rain & snow)
X = Missed or lost sample

Figure 8-2. *Calendar of events.*

time periods, two other important terms, are discussed in Section 8.6.3. Reporting units are typically:

pH - pH units,
conductivity - microS/cm or micromho/cm,
concentration - micromol/liter, and
precipitation - mm (1 in. = 25.4 mm).

Transformation from microgram/ml (ppm), the generally used analytical term, to micromol/liter is:

micromoles/liter = microgram/ml x conversion factor 8-6

The conversion factor for each ion is in Table 8-6.

Table 8-6. *Factors to Convert Microgram/ml to Micromol/liter (micromol/l = microgram/ml x factor)*

Analyte	*Molecule Weight*	*Factor*
Cl^-	35.46	28.2
NO_3^-	62.01	16.1
$SO_4^=$	96.07	10.4
PO_4^{-3}	94 98	10.5
H^+	1.01	990.1
NH_4^+	18.04	55.4
Na^+	22.99	43.5
K^+	39.10	25.6
Mg^{++}	24.31	41.1
Ca^{++}	40.08	25.0

8.6.3 *Weighted Mean Values and Deposition*

Generally reported on a cumulative basis for a given time interval are precipitation weighted mean concentration C_i for various ions.

$$C_i = \Sigma_j P_j C_{ij} / \Sigma_j P_j \qquad 8\text{-}7$$

where P_j = amount of precipitation in event j (mm or ml),
C_{ij} = concentration of constituent i for event j (micromol/l).

For pH or H^+ concentration, the cumulative value is calculated, and the final pH

$$\overline{pH} = -\log \left[\frac{\Sigma_i (P_i 10^{-pH_i})}{\Sigma_i P_i} \right] \quad 8\text{-}8$$

The cumulative average concentration at each site can be used in studies of distribution of the constituents as a function of time (month or season) and geographic location.

Total deposition of an analyte per unit area (mg/m^2) in a precipitation event or time interval is calculated as:

$$mg/m^2 = microgram/ml \times 25.4 \times P \quad 8\text{-}9$$

where P = precipitation (in.) and 25.4 = 2.54 cm/in. x 10^{-3} mg/microgram x $10^4 cm^2/m^2$.

Treatment of missing data in calculating the above values is discussed in Section 8.7.3.

8.6.4 *Reporting and Treating of Below-Detection-Limit Data*

Data below the detection limit (BDL) for the analytical method used should be flagged with a code both in the printouts and in all computer readable data forms. Because it is important for data interpreters to know the detection limit, a suggested code is the negative DL. The treatment of these data in data processing programs depends on the analysis being performed; examples are replacing all BDL data with 0 if an arithmetic mean is being taken or with ½ DL(10) if a geometric mean is being computed. Any computed summary value which has 25% or more BDL contributing data points should be coded with a unique flag.

8.6.5 *Reporting of Out-of-Control Data*

Analytical data in the same batch with an out-of-control QC sample must be flagged in the data base as suspect. All such data must be either reanalyzed or reported as invalid, unless the laboratory supervisor decides that the cause of the out-of-control condition could not have affected the analytical results. Data reported as invalid should not be used in statistics, analysis, or other interpretation. For data stored or reported on computer readable media, it is often best to use a character or code to indicate out-of-control, missing, BDL, and so forth.

8.6.6 *Treatment of Outliers*

Any data point that lies far beyond the normal range of values can be considered an outlier. Responsibilities should be divided between invalidations by experimental and data interpretation personnel. Experimental personnel should invalidate data only for experimental reasons such as known contamination or violation of QC criteria for a spike, blank, or duplicate; they should not invalidate outliers Outliers in data interpretation is discussed in Section 8.7.2.

8.6.7 *EPA Rain Water Data Base*

The EPA is establishing a precipitation data base for all United States and Canadian deposition programs. This System of Atmospheric Deposition (SAD) data will be coordinated through the National Computer Center (NCC). Prospective contributors/users should contact Gardner Evans, United States EPA, Environmental Research Center (ERC), (MD 075), Research Triangle Park, NC 27711.

8.7 Statistics in Data Interpretation

This section discusses briefly the types of statistics that should be used in precipitation data interpretation and the subjects of outliers and missing data.

8.7.1 *Parametric and Nonparametric Methods and Tests*

Many procedures routinely used in statistical analysis involve the assumption that the parent population from which a sample is drawn has a normal (gaussian) distribution. Normal distribution is not needed to compute means, weighted means, and variances; the most common formulas for computing means and variances converge to values for the parent population for large sample sizes, regardless of distribution. Many common hypothesis tests normal distribution; these are called parametric tests because they are concerned with parameters (mean and standard deviations) of a single functional form (the gaussian curve). For example, the Student t-test for determining whether two samples come from populations with the same mean assumes that the samples come from normally distributed populations with the same variance; thus it is imporant to know whether the data set one is working with comes from a normally distributed population.

Precipitation data frequently show skewed distributions sometimes interpreted as log-normal(11). The distributions are inevitably nonnormal (for all analytes except pH) because negative values of concentration and rainfall are not allowed. The resulting distortions could be small if the mean is two or more times the standard deviation, but this has not been the case in precipitation for analytes other than pH.

To test whether an analyte has a normal distribution, use an optimized chi-square test(12) for sample populations of over 100 with the number of class intervals chosen according to the algorithm of Mann and Wald(13). If the number of data points in the set is below 100, use the Lilliefors(14) test for normality; this test may also be used for sample sizes greater than 100. If an analyte fails the test for normality, repeat the test with the logarithm of each data point to determine if the parent distribution is log-normal.

All data below the DL of the analytical procedure must be set to positive nonzero values An acceptable value is ½ DL. A significant number of BDL data points results in a distribution which is neither normal nor log-normal. If the distribution is log-normal and the interpreter wishes to proceed with parametric hypothesis testing, log-transformed data must be used. It is unacceptable to use ordinary parametric statistics on a distribution which is skewed enough to appear log-normal.

If the distribution fails both the normal and the log-normal tests, do the hypothesis testing with nonparametric tests, also known as distribution-free statistics; these tests do not assume that the parent distribution is normal so they work whether it is or not. If distribution is normal, these tests are only slightly less powerful than the parametrics, so they can serve as a viable alternative if the data analyst does not wish to test for normality. Another advantage of nonparametrics is its being less sensitive to outliers than parametrics; this insensitivity to outliers is due to dealing with ranks and categories of the data rather than original data points. A good reference on nonparametric hypothesis testing is Conover(15).

8.7.2 *Outliers*

Data interpreters may delete outliers, depending on the computations being performed. For example, computations of mean values are generally not sensitive to deletion of the relatively few data from both ends of the distribution, but computations of skewness may be very sensitive to the loss of data at the extremes of the normal distribution.

A large concentration event which is an outlier in the concentration distribution may not be an outlier in the deposition distribution if the total rainfall amount is small. The decision to delete data from the ends of the distribution must be made with the full understanding of the interpretations being considered; this understanding is not possible if data are deleted by experimental personnel before interpreters see the data.

In precipitation chemistry, selection of outliers is difficult due to the following considerations:

1. Spatial distributions of pollutants vary, so one site or more than one site in similar locales must be considered separately from sites in different locales
2. Seasonal amounts of pollutants at each site generally vary.
3. Concentrations of pollutants can reach unusually high or low values in precipitation events.

Considering the above, no data that have met the QC criteria (discussed in previous sections) should be discarded. Because relatively few nonnormal data points or outliers are expected, the effect on the mean values of any constituent should be small

Nonparametric hypothesis testing provides no way to check for outliers (A point can be identified as isolated from its parent population only if a form for the parent population is assumed.) Fortunately, nonparametric tests are comparatively insensitive to outliers so the outliers may be left in the data base.

Parametric tests for detecting outliers are in Reference 4, Appendix F; these are designed to eliminate only one or two outliers from a data set, but it is *absolutely invalid* to drop detected outliers and then to pass through the data again to look for other outliers

8.7.3 *Missing Data*

If a small percentage of samples are lost (e.g., due to downtime of equipment), the effect of neglecting their contributions to the precipitation weighted average, the pH or the concentration of a constituent is expected to be small. However, the effect of the lost samples on the total amount of material deposited is more important; the deposition contributions of lost samples should be calculated by using the precipitation weighted mean seasonal concentration values for that site and the measured or reported (National Weather Service) precipitation amounts for the missed events.

8.8 Data Forms

Blank data forms on the following pages can be used for manual transcription of data from digital meters or from strip chart records to prepare for data processing. Details on preparing data forms for each laboratory analysis are in the respective sections of the O & M manual(1).

8.9 References

1. *Operations and Maintenance Manual for Precipitation Measurement Systems,* United States Environmental Protection Agency, Research Triangle Park, N.C., (in press).
2. *An Introduction to Mathematical Statistics,* H.D. Brunk, Blaisdell Publishing Co., Waltham, MA, 1976, p 210.
3. Hubaux A. and G. Vos, Anal. Chem., *42,* 849 (1970)
4. *Quality Assurance Handbook for Air Pollution Measurement Systems - Vol. I- Principles,* United States Environmental Protection Agency, Research Triangle Park, N.C., EPA-600/9-76-005 (1976).
5. *Handbook for Analytical Quality Control in Water and Wastewater Laboratories,* United States Environmental Protection Agency, Cincinnati, OH, EPA-600/4-79-019 (1979).
6. *Handbook of Chemistry and Physics,* 48th ed Edited by R.C. Weast, The Chemical Rubber Co., Cleveland, OH 44128, 1967-68.
7. Mero, J.L., *The Mineral Resources of the Sea,* Elsevier Publ., New York, N.Y. p.25 (1964).
8. Lodge, Jr., J.P., J.B Pate, W. Basbergill, G.S. Swanson, K.C. Hill, E. Lorange and A.L. Lazrus, "Chemistry of United States Precipitation," Final Report on the National Precipitation Sampling Network, National Center for Atmospheric Research, Boulder CO, August (1968)
9. Electric Power Research Institute, "Acid Precipitation in the Northeastern United States," Contract Nos. RF1376-1 and RF1630-2, Rockwell International Environmental Monitoring and Services Center (1978-1980).
10. Nehls, G. and G. Akland, J. Air Pollut. Control. Assoc., *23,* 180 (1973).
11. "The MAP3S/RAINE Precipitation Chemistry Network: Statistical Overview for the Period 1976-1980," Atmos. Environ., submitted for publication.
12. Kendall, M.G. and A. Stuart, *The Advanced Theory of Statistics, Vol. II,* Chapter 30, Hafner Publishing, New York, (1967).
13. Mann. H.B. and A. Wald, "On the Choice of the Number of Class Intervals in the Application of the Chi-squared Test," Annals of Math. Statistics *13,* 306-7 (1942).
14. Lilliefors, H.W., "On the Kolmogorov-Smirnov Test for Normality with Mean and Variance Unknown," J. Amer. Statistical Assoc., *62,* 399-402 (1967).
15. Conover, W.J., *Practical Nonparametric Statistics,* John Wiley and Sons, New York, 2nd Ed. (1980).

Gran Strong Acid Data Sheet

	Sample # Initial mv Temp. °C	µl NaOH Injected	mv reading		Sample # Initial mv Temp °C	µl NaOH Injected	mv reading

Data Sheet

N	ID			Peak Ht						
1	Baseline 1			B1						
2	Std 1									
3	Std 2									
4	Std 3									
5	Std 4									
6	Std 5									
7	Sample 1									
8	Sample 2									
9	Sample 3									
10	Sample 4									
11	Sample 5									
12	QC 1									
13	Sample 6									
14	Sample 7									
15	Sample 8									
16	Sample 9									
17	Baseline 2			B2						
18	Sample 10									
19	Sample 11									
20	Sample 12									
21	Std 1									
22	Std 2									
23	Std 3									
24	Std 4									
25	Std 5									
26	Baseline 3			B3						
27										

9.0 Data Quality Assessment

Precision and accuracy of precipitation data provide quantitative assessments of data quality. Procedures for determining precision and accuracy were designed for specific monitoring and analysis methods Measurement methods used in precipitation chemistry monitoring systems for integrated sampling follow a three-step process; the first two are functions of field operations, and the third is part of the laboratory operations.

1. Collection of the sample in a suitable sampler.
2. Initial field analysis for pH, specific conductance, and weight
3. Expanded chemical analyses in the laboratory.

At each step, QA should be assessed

Precision of sampling is determined by using collocated samplers; field measurement accuracy is determined by test sample audit. Precision of laboratory analytical methods is determined with duplicate samples; accuracy is determined by an internal and external blind sample audit.

9.1 Evaluation of Field Operations

9.1.1 *Sampling Precision*

Precision is estimated by duplicate samplings with collocated precipitation samplers. Each network of sites operated by the same agency should have a duplicate sampler of the type used for routine monitoring. The collocated sampler operated during routine sampling should be set up consistent with siting criteria (Section 5.0).

Data from the collocated sampler are compared to data from the station sampler. The measured difference in pH (pH units), conductivity (micromho/cm), and total mass captured between the samplers are used to calculate precision. For each pair of measurements, differences can be calculated using:

$$\Delta_i = y_i - x_i \qquad 9\text{-}1$$

where Δ_i = difference in measurements for ith precision check (appropriate units),

y_i = pH, conductivity, or weight measured by the duplicate collocated sampler for ith precision check, and

x_i = pH, conductivity or weight measured by the the corresponding station sampler for the ith precision check.

Quarterly, standard deviation s is estimated for each site with collocated samplers:

$$s_j = \left\{ \frac{1}{(n-1)} \left[\sum_{i=1}^{n} \Delta_i^2 - \frac{1}{n} \left(\sum_{i=1}^{n} \Delta_i \right)^2 \right] \right\}^{1/2} \qquad 9\text{-}2$$

where s_j = quarterly standard deviation of jth instrument during ith precision check,

Δ_i = difference in measurements during ith precision check, and

n = number of precision checks on the instrument during calendar quarter.

If the network contains more than one collocated sampler, an overall precision estimate s_a for each measurement method can be computed quarterly:

$$s_a = \left[\frac{1}{k} \sum_{j=1}^{k} S_j^2 \right]^{1/2} \qquad 9\text{-}3$$

where s_a = overall deviations for a specific measurement method,

s_j = standard deviations of jth sampler for measurement method, and

k = number of collocated measurements within the network.

Data from both the station sampler and the collocated sampler are recorded on standard Field Data forms (Section 6.8.5) with corresponding identifications. Copies of these forms should be submitted to the QA coordinator, who summarizes the data on the Precision Check form (Section 9.5), which is used in preparing QA reports (Section 9.3).

9.1.2 *Accuracy of pH and Conductivity Measurements*

To assess the accuracies of field measurements of pH and conductivity, audits should be conducted using test samples prepared and sent from the central laboratory each month (Section 7.6). The samples should be measured as soon as possible after receipt, and the results should be returned to the laboratory with the remainder of the sample. The audit results should include two laboratory analyses—one before the sample is sent to the field and one after it is returned and the field analysis results. The QA coordinator should record all the data on the Monthly Field Audit Report (Section 9.4).

Accuracy for each measured variable is estimated by computing value differences:

$$\Delta_j = f_j - (l_{ij} + l_{fj})/2 \qquad 9\text{-}4$$

where Δ_j = difference in measurements for jth site (appropriate units),

f_j = field analysis of variable for jth site,

l_{ij} = initial laboratory analysis of variable before shipment to the jth site, and

l_{fj} = final laboratory analysis of variable after return from jth site.

This equation should be used only if $|l_{ij} - l_{fj}|$ is less than the control limits.

Data should be summarized in the Monthly Field Audit Report by the QA coordinator, who also computes an average monthly network difference $\bar{\Delta}_m$ for the variables pH and conductivity

$$\bar{\Delta}_m = (1/n)\Sigma_{j=1}^{n} \qquad 9\text{-}5$$

and for the monthly standard deviation s_m

$$s_m = \left\{ \frac{1}{(n-1)} \left[\sum_{j=1}^{n} \Delta_j^2 - \frac{1}{n} \left(\sum_{j=1}^{n} \Delta_j \right)^2 \right] \right\}^{1/2} \qquad 9\text{-}6$$

where $\bar{\Delta}_m$ = average monthly network difference for a given variable,

Δ_j = difference between lab l_j and field f_j at the jth site, and

n = number of sites audited during the month.

Monthly reports should be summarized in a quarterly report (Section 9.3).

9.1.3 *Method Precision*

Each network should maintain at least one pair of collocated samplers (Section 9.1.1). The collected samples should be tagged so their respective measurements in the field and the

laboratory can be used to assess quantitatively the monitoring (sampling, handling, and measurement etc.) precision by using Equations 9-1 through 9-3 above, where y and x also represent concentrations of species. Data should be reported on the Precision Checks forms (Section 9.4).

9.2 Evaluation of Laboratory Operations

The QA coordinator must implement routine activities to assess the precision and accuracy of laboratory chemical analyses of precipitation samples. Laboratory data quality is assessed by determining the precision, variability, accuracy of chemical analyses.

9.2.1 *Analytical Precision*

To estimate the contribution of analytical variability to total variability, duplicate sample analysis should be performed on about 10% of the routinely analyzed samples. Samples randomly selected for replicate analysis by the QC chemist should contain a large quantity of precipitation. The chosen samples should be split—one-half for analysis immediately, the other half for refrigeration at about 4°C to be analyzed within a week by a different analyst. The sample should be properly identified, and the results of the duplicate analyses should be recorded by the QA coordinator in the Report of Duplicate Analyses (Section 9.4).

9.2.2 *Accuracy of Chemical Analysis*

Accuracy of chemical analysis should be determined monthly on blind samples submitted to the laboratory by randomly selected field sites. These samples, prepared by diluting various water standards, should be shipped in sealed plastic bottles to the field sites. Each sample should be identified, and accompanied by two postcards. On receipt at the field site, the sample should be refrigerated at 4°C until it is forwarded to the laboratory. At the end of the first week in which no event has occurred, the sample should be transferred to a clean weighed bucket or to the usual container for shipment. The sample should be weighed, and an aliquot should be measured for pH and for specific conductance. A field data form should be filled out with measured values and the other required data; to do this, a non-existing precipitation record will have to be used. Sample and site identification, sampling date(s), pH, conductivity and weight should be recorded on postcards. The sample and the data form should be sent to the laboratory (as for any sample), and the postcards mailed to the QA coordinators for both the monitoring network and for the blind sample preparation laboratory, thus, if one card is lost, the information will be available from the second.

At regularly scheduled intervals, the analytical laboratory should send a printout of sample results to the QA coordinator. The QA coordinator identifies the blind samples, has the data transferred to the QA data file, notifies the analytical laboratory of sample results that must be deleted from the precipitation data file; and sends the laboratory the expected QA sample values. If there is a difference between any analyzed and expected values that is greater than the experimental error, that analysis must be repeated. (Samples must be stored in a laboratory refrigerator until results have been approved by the QA coordinator.) Data should be summarized as indicated in Equations 9-4 and 9-5 (Section 9.1.2). The QA coordinator should obtain samples from EPA's NAP and from the USGS semi-annually for overview purposes.

9.3 Reporting of Data

9.3.1 *Laboratory Results*

When analyses are complete and the analyst has released the data for reporting, a printout or summary of the following must be prepared:

Analytical data
Anion-cation comparison data
Measured vs. calculated conductance data
Quality control data

The anion-cation and the measured vs. calculated conductance comparison data were discussed in Sections 8.5.6 and 8.5.7. The QA data should be a listing of the results of the QC parameters which pertain to the particular data being reported and to the audit results. Data which exceed previously established QC limits should be flagged.

The QA coordinator should provide the following reports to the project manager:

Precision - Quarterly reports, summarizing all data on collocated samples and duplicate analyses performed during the 3 mos, should include differences in analytical results for the split samples and the average difference for each analyte; the report should compare average differences with the QC ranges typical for the laboratory and the measurement method.

Accuracy - Quarterly reports, summarizing all data on three blind QA samples in the 3 mos, should include the different constituent concentrations and an average difference and standard deviation computed for each. Data for the comparison should be obtained for each blind sample by the QA coordinator who summarizes the differences (mg/liter) for each constituent.

9.3.2 *Audit Data Basis for Field Measurements*

The pH and the conductivity are generally measured in the field because of simplicity, importance, and the possibility of chemical change before a sample would arrive in the laboratory. To assess the quality of measurement by the field operator, audit or test samples sent from the laboratory should be run. (To assess sampling precision, collocated samplers should be run (Section 9.1).) Results should include the two laboratory analyses (before the sample is sent to the field and after it is returned) and the field analysis. Because the amount of data is generally not large, computer data management is optional. The steps involved in using these data for checking the quality of field measurements are in Figure 9-1.

Control limits for differences between field and laboratory measurements must be set during the preliminary instrument performance documentation. Factors contributing to random variability should include differences between well-calibrated instruments; storage time (several days between measurements); storage conditions (temperature, agitation, etc.); and differences in field and laboratory solution temperatures during measurement (effect can be negligible if instruments have temperature compensation). After a sufficient data base with real measurements is established, new control limits can be calculated from actual data. The data base should give the standard or average deviation for each station and for the network as a whole. Typical control limits for 95% confidence are approximately 0.15 unit for pH and 10% for conductivity. Data should also indicate when a bad pH electrode or conductivity standard needs replacing.

The laboratory manager should evaluate the data carefully if an electrode is malfunctioning because it might be necessary to invalidate all data taken by that electrode since the last acceptable audit; thus monthly test samples are suggested.

9.4 Data Forms

Blank forms on the following pages were taken or adapted from EPA forms and from other references. No page-by-page documentation is given in the top right-hand corners on these forms. The titles are at the top of the figures as is customary. To relate each form to the text, a form number is given in the lower right-hand corner: 1.1/9.1 indicates form 1, version 1 (Section 9.1). A

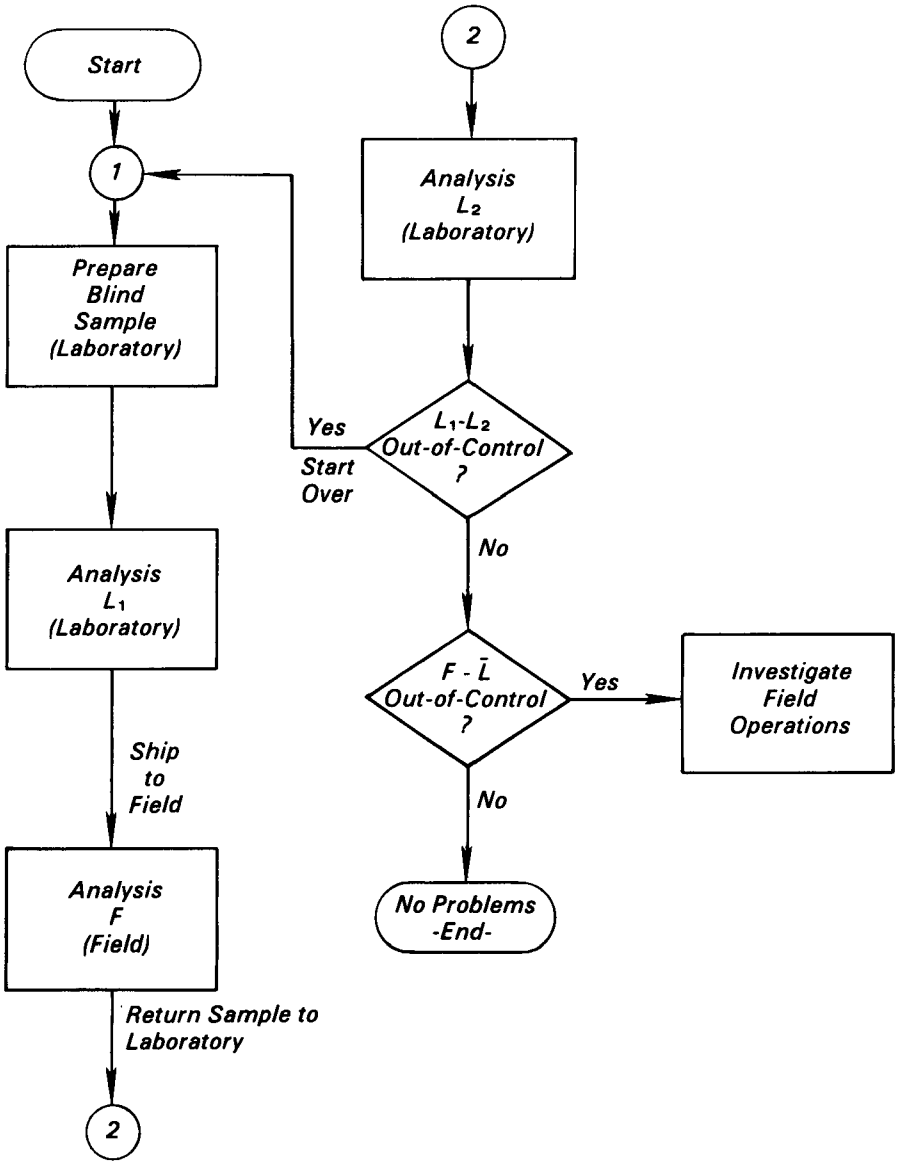

Figure 9-1. *Audit procedure for field measurements of pH and conductivity.*

revision of the form would be changed to 1.2/9.1 three forms included here for user convenience are: form 1, version 2, and so forth.

Form Number Title
1.1/9.1 Precision Checks
2.1/9.1 Monthly Field Audit Report
3.1/9.2 Report of Duplicate Analyses

*Precision Checks**

Site ID _____ *Station Sampler #* _____

Month/Year _____ *Collocated Sampler #* _____

Date _____

Weight (gm)	*S*	
	C	
	D	
pH (pH units)	*S*	
	C	
	D	
Conductivity (μmho/cm)	*S*	
	C	
	D	

* *S - Station Sampler*
C - Collocated Sampler
D = S - C

$$\bar{\Delta}_i = \frac{1}{n}\sum_{i=1}^{n} D_i$$

$$S_i = \left\{ \frac{1}{(n-1)} \left[\sum_{i=1}^{n} D_i^2 - \frac{1}{n}\left(\sum_{i=1}^{n} D_i \right)^2 \right] \right\}^{1/2}$$

Weight (gm)	$\bar{\Delta}_i$	_____
	S_i	_____
pH *(pH Units)*	$\bar{\Delta}_i$	_____
	S_i	_____
Conductivity (μmho/cm)	$\bar{\Delta}_i$	_____
	S_i	_____

_____ *QA Coordinator* _____ *Date*

Monthly Field Audit Report

Sample #: _____

Date of Preparation of Field Audit Sample: _____

_____
(Analyst Signature)

Laboratory Analysis Before Shipment[a] To The Field			*Laboratory Analysis After Return[a] From The Field*		
Date:			*Date:*		
	Conductivity	*pH*		*Conductivity*	*pH*
1.			*1.*		
2.			*2.*		
3.			*3.*		
±Average			*±Average*		
Std. Dev			*Std. Dev*		

Laboratory Analysis of Audit Samples Vs. Field Analysis

		Conductivity (μmho/cm)			*pH*		
Site #	*Field Date*	*Field Analysis*	*Lab[b] Analysis*	*Diff.*	*Field Analysis*	*Lab[b] Analysis*	*Diff.*

[a] *These data are for three laboratory aliquots which are analyzed before shipment of samples, are then refrigerated, and are reanalyzed with the samples returned from the field.*
[b] *Values after return from the field.*

Report of Duplicate Analysis

Analyte	*Analysis Technique*	*Routine** *(ID — — — — —)* *Date*	*Routine** *(ID — — — — —)* *Result*	*Duplicate*** *(ID — — — — —)* *Date*	*Duplicate*** *(ID — — — — —)* *Result*	*Diff.****
pH						
Conductivity						
Sulfate						
Nitrate						
Chloride						
Phosphate						
Carbonate						
Bi-Carbonate						
Acidity						
Strong Acid						
Ammonium						
Sodium						
Potassium						
Magnesium						
Calcium						

* *Value reported as routine sample*
** *Duplicate sample, might have different ID*
****Diff. ≡ Duplicate - Routine*

Appendix A
Hubaux-Vos Detection Limit Calculation

According to Hubaux and Vos(1), DL(Y_D) is the limit "at which a given analytical procedure may be relied upon to lead to detection." The Hubaux-Vos detection limit (DL) is significantly greater than the smallest detectable signal because the DL definition required a high level of certainty that a signal represents the presence of the analyte. An example calculation - To establish analytical precision and accuracy as a function of concentration, repetitively analyze five times an approximately 7-point calibration curve from the lowest standard to the highest. Then perform a linear least squares fit of all (~35) data points. Use the slope and the intercept values to calculate concentrations for all standard solutions. Calculate the average concentration and the standard deviation for each concentration. Express the accuracy as a percentage recovery found, as compared to that expected. Express the precision as percentage standard deviation. This procedure was applied to Pb, Cd, and Cr analyses by atomic absorption spectrometry. Linear least squares fit of each calibration curve produced a Hubaux-Vos DL for each curve. The average detection limit was calculated. The data in Table A-1 indicate, at the Hubaux-Vos DL for a single calibration curve, 10% to 20% analytical precision and 80% to 100% analytical accuracy.

Table A-1. *Hubaux-Vos Detection Limit Data*

Analyte	*Highest Conc. Std. (ug/ml)*	*Lowest Conc. Std. (ug/ml)*	*Overall DL, (ug/ml)*	*Avg DL, (ug/ml)*	*Recovery at Avg DL, %*	*Std. Dev. at Avg DL, %*
Pb	*5.0*	*0.1*	*0.13*	*0.224*	*92*	*17*
Pb	*10.0*	*0.3*	*0.17*	*0.325*	*90*	*16*
Cd	*0.5*	*0.01*	*0.006*	*0.011*	*81*	*12*
Cr	*1.0*	*0.03*	*0.019*	*0.036*	*97*	*12*

Table A-2. *Values For Student T-Test, 95% Confidence*

Number of Pairs	*T-Value for n-2 Degrees of Freedom*
3	*12.706*
4	*4.303*
5	*3.182*
6	*2.776*
7	*2.571*
8	*2.447*
9	*2.365*
10	*2.306*
11	*2.262*
12	*2.228*
13	*2.201*
14	*2.179*
15	*2.160*
16	*2.145*
17	*2.131*
18	*2.120*
19	*2.110*
20	*2.101*
21	*2.093*
22	*2.086*
>22	*2.06*
>32	*2.04*

An Example

1. $X = A + By$ A-1

where X = instrument response,

$$A = \frac{(\Sigma X)(\Sigma y^2) - (\Sigma y)(\Sigma Xy)}{n(\Sigma y^2 - (\Sigma y)^2/n)}$$

$$B = \frac{\Sigma X_y - (\Sigma X)(\Sigma y)/n}{\Sigma_y^2 - (\Sigma_y)^2/n}$$

n = total number of data points, and

y = concentration (generally in μg/ml or ng/ml).

$S = \sqrt{S^2}$

where $S^2 = \dfrac{\Sigma X^2 - (\Sigma X)^2/n - B^2(\Sigma y^2 - (\Sigma y)^2/n)}{n - 2}$ A-2

T = Students t-test for n-2 degrees of freedom, 95% confidence (Table A-2). A-3

$$X_c = A + ST\sqrt{1/n_r + 1/N + y^{-2}/(\Sigma y^2 - (\Sigma y)^2/n)}$$ A-4

$$Y_D^1 = \frac{2(X_c - A)}{B} \text{(first estimate).}$$ A-5

$$Y_D = \frac{X_c - A + ST\sqrt{1/n_r + 1/N + (Y'_D - \bar{y})^2/(\Sigma y^2 - (\Sigma y)^2/n)}}{B}$$ A-6

where n_r = number of repeats of each concentration,

N = number of concentrations, and

n = total number of data points (n,N).

$$X' = A + BY_D - ST\sqrt{1/n_r + 1/N + (Y_D - \bar{y})^2/(\Sigma y^2 - (\Sigma y)^2/n)},$$ A-7

$$\text{delta} = X_c - X.$$ A-8

If delta = less than some tolerance level, stop; A-9

DL = Y_D; if not, replace Y_D by new Y_D

new $Y_D = Y_D$ + delta/B. A-10

If number of iterations = less than 50, go to Equation A-7.

Reference

1. Hubaux, A., and G. Vos, Decision and Detection Limits for Linear Calibration Curves, Anal. Chem., *42* (8), 849 (1970).

Appendix B
Methods Validation Study for Lead Analysis by Flame Atomic Absorption

First the flame atomic absorption instrumental conditions were optimized, and then a 7 point calibration curve for lead (Pb) at concentration of 0.3 to 10 0 microgram/ml was plotted. Each concentration was analyzed sequentially five times.

The strip chart recording of the raw data is in Figure B-1. Peak heights were measures of responses. A scale expansion of 10 times was used, so instrumental response was approximate 0.0039 absorbance units/cm. Data were tabulated and calculated (Section 4.2.3 of this manual), and summarized in Table B-1. The data would be useful in documenting instrument performance for future reference and for communicating accuracy and precision to people outside of the laboratory. The accuracy (% recovery) and precision (% std. dev.) as functions of concentration are plotted in Figure B-2. The "3s value" would be useful as an upper control limit in real-time quality control (Section 4.3.5).

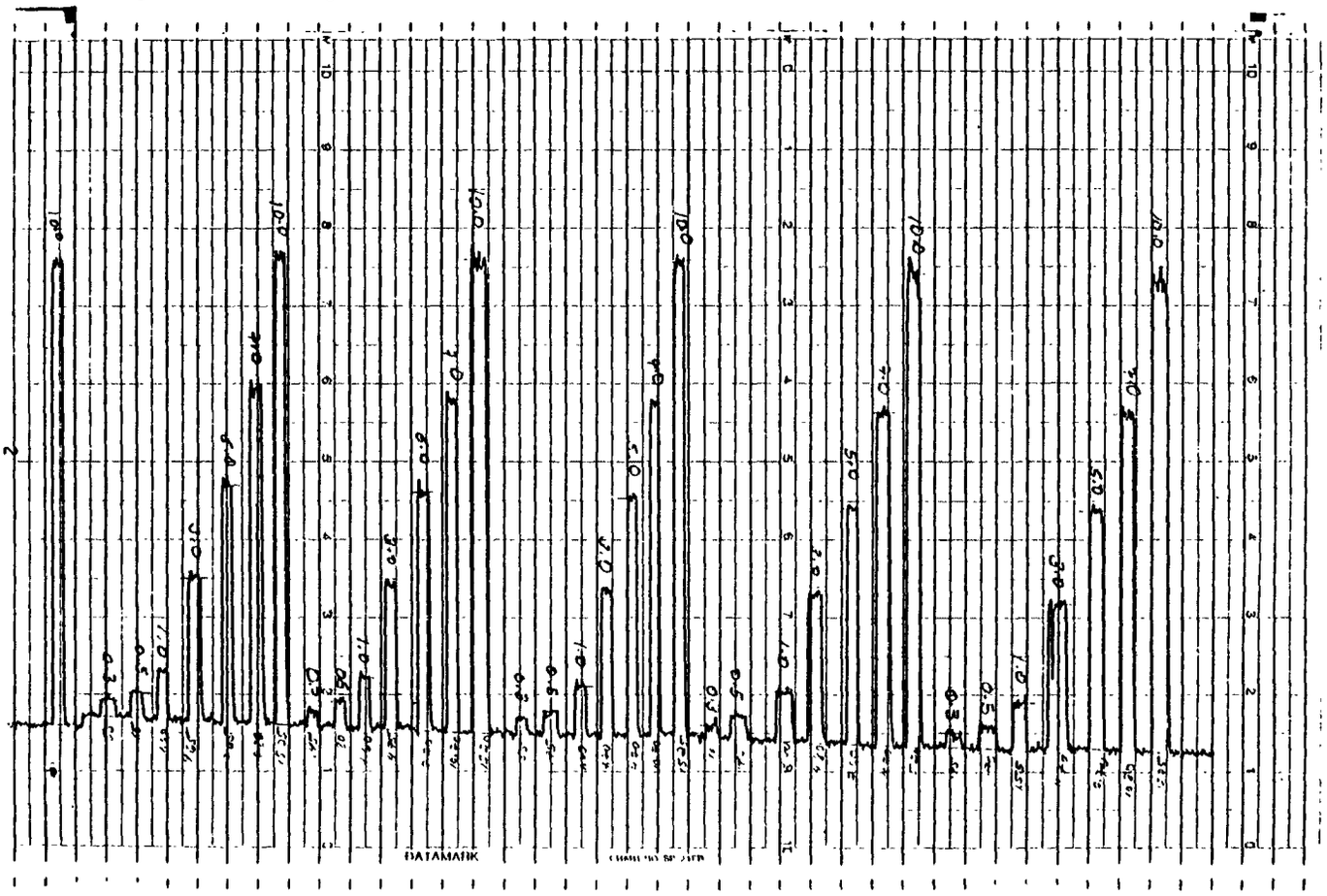

Figure B-1.

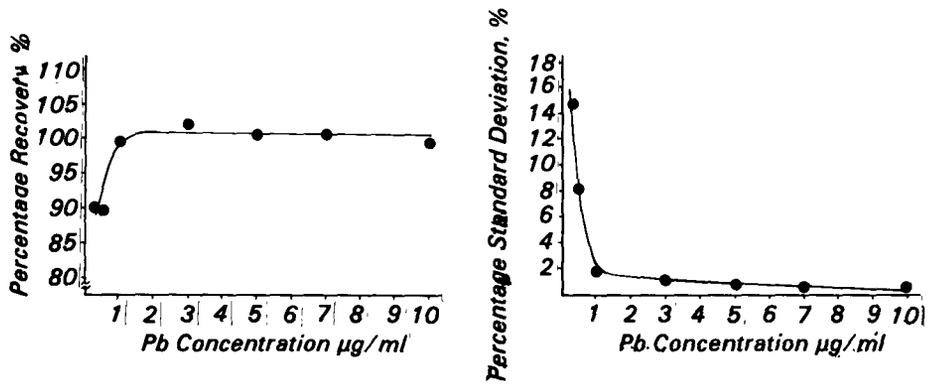

Figure B-2. Accuracy and precision of Pb analysis as a function of concentration.

Table B-1
Precision-Accuracy Methods Validation Form

Conc. Taken (µg/ml)	Instrumental Response (cm)				
	Curve 1	Curve 2	Curve 3	Curve 4	Curve 5
Curve[b] Parameters					
Slope					
Intercept					
Error					
Corr. Coef					
Det. Limit					

Species. _____
Date _____
Scale[a]. _____

_____
(Analyst Signature)

Curve Parameters Overall[c]

Slope _____
Intercept _____
Error _____
Correlation Coef. _____
Detection Limit _____

Average ± Standard Deviation	3 σ Value[d]
_____	
_____	
_____	
_____	
	_____

Regression Concentration[e]

Conc. Taken (µg/ml)	Curve 1	Curve 2	Curve 3	Curve 4	Curve 5	Average Conc. Found	Standard Deviation	% Recovery	% Std. Dev

[a] For Dionex, indicate approximate µmho/cm full scale (µmho/cm scale x volts on recorder); For AA, indicate scale expansion; For Technicon, indicate method and flowcell length.
[b] The curve parameters are calculated using the linear least squares fit of Appendix D
[c] From a linear least squares fit of all data points.
[d] This is the average value + 3x(standard deviation).
[e] This calculated from the instrumental responses given above, using the "Curve Parameters Overall".
[f] Not included in linear least squares fit.

United States
Environmental Protection
Agency

Environmental Monitoring Systems
Laboratory
Research Triangle Park NC 27711

Research and Development

EPA-600/4-82-042b Jan. 1981

EPA

Quality Assurance Handbook for Air Pollution Measurement Systems:

Volume V. Manual for Precipitation Measurement Systems

Part II. Operations and Maintenance Manual

Notice

This document has been reviewed in accordance with U.S. Environmental Protection Agency policy and approved for publication. Mention of trade names or commercial products does not constitute endorsement or recommendation for use.

Foreword

Measurement and monitoring research efforts are designed to anticipate potential environmental problems, to support regulatory actions by developing an in-depth understanding of the nature and processes that impact health and the ecology, to provide innovative means of monitoring compliance with regulations and to evaluate the effectiveness of health and environmental protection efforts through the monitoring of long-term trends. The Environmental Monitoring Systems Laboratory, Research Triangle Park, North Carolina, is responsible for development of: environmental monitoring technology and systems; agency-wide quality assurance programs for air pollution measurement systems; and technical support to EPA's Office of Air, Noise and Radiation, Office of Toxic Substances, and Office of Enforcement.

This manual has been developed to assist agencies which plan to make precipitation measurements. The standard operating procedures in this manual currently are EPA's recommended methods for precipitation monitoring. This manual, when used with the Quality Assurance Manual for Precipitation Measurement Systems, should be the basis for planning a precipitation monitoring effort.

Thomas R. Hauser, Director
Environmental Monitoring Systems Laboratory
Office of Research and Development

Abstract

This manual presents techniques and procedures for field and laboratory operations associated with precipitation monitoring and analysis. Where applicable, the analyses given are those approved by the U.S. Environmental Protection Agency for water and wastes. The methodology described will provide guidance for personnel and will maximize the quality as well as the quantity of data collected.

Contents

Section	Pages	Date
1.0 Introduction	2	1/1/81
2.0 Field Operations	13	1/1/81
3.0 Laboratory Support Operations for the Field	10	1/1/81
4.0 Laboratory Procedures	21	1/1/81

Acknowledgement

This report was prepared for the Environmental Monitoring Systems Laboratory, Research Triangle Park, North Carolina, under the direction of the Project Officer, John C. Puzak. Material in this manual has been based on current EPA quality assurance procedures, air and water monitoring methodology, and procedures employed in the Electric Power Research Institute (EPRI) Acid Precipitation Study, the National Atmospheric Deposition Program (NADP), and the Multi-State Atmospheric Power Production Pollution Study (MAP3S). The authors wish to extend grateful appreciation to the contributions of the staff at Rockwell International's Environmental Monitoring & Services Center, Newbury Park, California, and the many reviewers of the drafts of this document.

1.0 Introduction

Pollutants are removed from the atmosphere by wet and dry deposition; these pollutants include substances beneficial (nutrients) to the environment as well as those potentially harmful. The harmful pollutants such as formed from sulfur dioxide (SO_2) acid sulfates and nitrates and nitrogen oxide (NO_x) emissions, give rise to the phenomenon commonly called acid rain or precipitation. Precipitation is acid if its pH, where pH = -log H^+, is less than 5.6—the value due to dissolved atmospheric carbon dioxide (CO_2) alone.

Acid precipitation can affect the ecology in sensitive unbuffered areas. The losses of fish populations from lakes in Scandinavia and in the Adirondacks of upper New York are ascribed to acid precipitation. Other harmful effects on plant life and soil are being studied but are not well understood at present. Acid precipitation on materials of contruction (both manmade and natural) causes economic and esthetic losses.

Because of increasing awareness of potentially harmful effects of acid precipitation on the ecology, the numbers of monitoring networks and effects studies are increasing. Monitoring networks require uniform, systematic, and approved procedures for the acquired data to be accurate and directly comparable among networks.

1.1 Purpose

This operations and maintenance (O & M) manual is written to guide personnel involved in precipitation chemistry monitoring while they carry out various tasks and procedures. It is highly recommended that all field and laboratory operators take a course given by a field manager or other knowledgeable personnel in the pertinent procedures discussed in this manual. The operations covered herein include:

1. Field operations,
2. Laboratory field support operations, and
3. Laboratory operations.

Quality assurance aspects of the operations are presented in the *Quality Assurance Manual for Precipitation Measurement Systems* (1). However, to provide a better understanding of the methodology, some duplication occurs between the quality assurance and the O & M manuals.

The basic goals of the procedures are to collect representative samples without contamination and to preserve sample integrity for analysis. The possibility of sample contamination, degradation, or reaction must be minimized. The sample collector, the first object that contacts the sample, must meet the basic goals, and must be reliable. The Aerochem Metrics automatic sampler has been tested and accepted by most U.S. monitoring networks; thus sampler discussion is limited to this model.

For a rain gauge, pH and conductivity meters, a balance, graduated cylinders, or other equipment generally required at a precipitation monitoring station, various makes and models can meet the goals; thus no particular models are referred to, and the discussion is general.

The material in this manual is based primarily on the procedures in the EPRI (Electric Power Research Institute) Acid Precipitation Study in the Northeastern United States, in NADP (National Atmospheric Deposition Program), and in MAP3S (Multi-State Atmospheric Power Production Pollution Study).

The EPA handbooks for air pollution measurements (2,3) and for water measurements (4) were used as guides for format and content. The analytical procedures are based on those in the water and wastes handbook(4). To have the O & M manual stand alone without requiring referrals to the other EPA handbooks, some duplication of material was required; this material is referenced.

1.2 Collection Sites

Collection sites must be located to meet the objectives of the monitoring program—for example, baseline, regional or urban, and siting criteria in Section 5.6 of the quality assurance manual(1). The site must yield representative samples so must not have any obstructions which will effect the results. The general rule for placement of samplers is: the distance between an obstruction and the collector should be at least twice the height of the larger of the two objects. For objects of the same or similar heights (e.g., a collector and a rain gauge), the distance between the two should be at least the height but preferably twice the height of the object.

1.3 Parameters and Analytes Generally Measured

The constituents and/or indicators commonly measured are listed below. All are measured in the laboratory; items 8, 9, and 10 are measured in the field.

1. *Sulfates* ($SO_4^=$) - Concentrations above the baseline values are caused mainly by human activities, principally by the release of SO_2 during the burning of fossil fuels and during refining processes; the SO_2 is oxidized to sulfate in the atmosphere.
2. *Nitrogen Compounds* (NO_3^-, NH_4^+) - NO_x (essentially NO + NO_2) concentrations above the baseline values are caused primarily by the burning of fossil fuels, such as for transportation purposes; NH_3 occurs chiefly from biochemical reactions.
3. *Chloride Ion* (Cl^-) - Originates chiefly from sea salt aerosols.
4. *Phosphate* (orthotribasic PO_4^{-3}) - Source is soil, rock, and fertilizers; an important nutrient.
5. *Metal Ions* (Na^+, K^+, Ca^{++}, Mg^{++}) - Na^+ originates mainly from sea salt aerosols, but all of these ions can originate from soil dust in desert, semiarid and intensively cultivated areas.
6. *Acidity* - Both SO_2 and NO_2 form the acids found in precipitation.
7. *Alkalinity* - Calcareous material (e.g., soil carbonate ($CO_3^=$)), can make precipitation alkaline, and can neutralize the effects of acids.
8. *pH* - A quantitative measure of precipitation alkalinity or acidity. In a clean atmosphere, a water sample in equilibrium with atmospheric CO_2 would measure pH 5.6; the acidity increases as the pH decreases from 5.6 to zero. Alkaline samples have pH 7 to 14.
9. *Electrolytic Conductance* - The reciprocal of the resistance of a solution and a measure of the concentrations of dissolved salts.
10. *Precipitation Amount* - Value required both to calculate the weighted mean values of the constituents and to derive the total amount of materials deposited over a time period.

1.4 Sampling Periods, Definition of Event

Precipitation sampling schedules that are commonly used include weekly, daily, event, and subevent (sequential). An event can be defined as a storm separated from a second storm by a dry

interval, commonly at least 6 h in the winter or at least 3 h in the summer. The sampling schedule depends on the objectives of the program and on the available funds. If rain data need to be correlated with aerometric and/or meteorological data, a subevent, event, or at most a daily schedule must be used. If the objective is to measure the amount of deposition and/or its effects, a weekly sample is generally sufficient. Sampling periods longer than 1 week are not advisable because important changes can occur while the sample remains in the collector.

1.5 References

1. *Quality Assurance Manual for Precipitation Measurement Systems,* U S. Environmental Protection Agency, Research Triangle Park, N.C., EPA-Draft.
2. *Quality Assurance Handbook for Air Pollution Measurement Systems - Vol. I - Principles,* U.S. Environmental Protection Agency, Research Triangle Park, N.C., EPA-600/9-76-005 (March 1976).
3. *Quality Assurance Handbook for Air Pollution Measurement Systems —Vol. II — Ambient Air Specific Methods,* U.S. Environmental Protection Agency, Research Triangle Park, N.C., EPA-600/4-77-027a (May 1977).
4. *Methods for Chemical Analysis of Water and Wastes,* U.S. Environmental Protection Agency, Cincinnati, OH, EPA-600/4-79-020 (March 1979).

2.0 Field Operations

Procedures for field sampling, measurement, and tests cover equipment operation and maintenance; sample collection, handling, preservation, storage, and shipment; documentation; and quality control procedures Precipitation samples are very dilute so large errors can occur due to contamination or degradation. Procedures should describe sample collection and handling in a way that preserves integrity and identity.

2.1 Equipment and Supplies

2.1.1 *Station Supplies*

The equipment and supplies required depend on station classification and on sampling objectives. Equipment and supplies for a weekly precipitation (the most common schedule) sampling station are listed in Table 2-1. Equipment required for event or daily precipitation sampling is similar. Similar storage and shipping procedures are also recommended for event or daily sampling. For sequential sampling, the list in Table 2-1 should include a different type of collector, a lower capacity (2.6 kg) more sensitive balance, polyethylene bottles with caps, means for storing and shipping the sample in a cold state (polyfoam-insulated containers and freeze-gel packs), and few, if any, buckets. If meteorological and/or aerometric measurements are made, the appropriate instruments must be included in the list; however, these instruments are not discussed in this O & M manual.

2.1.2 *Spare Parts (Off Site)*

Except for sampler fuses, which should be kept at each station, spare parts and supplies should be available from the field manager or the central analytical laboratory when needed. Supplies for a network of 10 to 12 stations are listed in Table 2-2. The polyethylene bottles are for special sampling studies and/or for sample storage in the laboratory.

No station should keep a spare pH electrode. Electrodes in contact with solution have a limited life because the wet glass membrane ages. Only electrodes that can be stored in a dry state have a long shelf life. However, electrodes should not be emptied, cleaned and filled with electrode solution by the station operators. When an electrode breaks or becomes suspect (Section 2.6.3.4), it should be replaced with a

Table 2-1. *Field Equipment List for Each Station*

Equipment/Material	*No./Site*
Automatic precipitation sampler (Aerochem Metrics 301)	*1*
Collection containers (3.5 gal) for sampler and lids	*5*
Fuses for sampler	*2*
Recording rain gauge with event marker	*1*
Rain gauge mount	*1*
pH meter, electrode	*1*
Buffer, pH 3.0, 4.0, 6.0, 7.0, and 8.0 (1 liter)	*1*
Conductivity meter and cell	*1*
Standard KCl solution, 74 umho/cm (500 ml)	*1*
Temperature probe	*1*
Balance (20 kg capacity) or graduated cylinder (2 liter)	*1*
Set attachment weights for balance (1,2,2,5,10 kg)	*1*
Mailing cartons	*3*
Wash bottle	*1*
Test tubes, plastic (17x100 mm) disposable, or vials (35 ml)	*375*
Test tube rack	*1*
Rain gauge charts (package of 100)	*1*
Gummed labels	*300*
Envelopes	*300*
Notebook	*1*
Data forms	*300*
Kimwipes or other tissues (boxes)	*15*
Shipping tape (rolls)	*3*
Mallet, rubber	*1*

Table 2-2. *Supplies List for a Network of 10 to 12 Stations.*

Equipment/Material	*No.*
Sampler fuses (12)	*1*
Sampler sensor and motor box	*1*
Rain gauge clock	*1*
Rain gauge chart clip	*3*
Rain gauge chart paper (package of 100)	*3*
Rain gauge pens and ink (set)	*1*
pH meter	*1*
pH electrode	*3*
Buffer, pH 3.0, 4.0, 6.0, and 7.0 (1 gal)	*2*
Conductivity meter	*1*
Conductivity cell (cell constant ~1)	*2*
Standard KCl solution, 74 umho/cm	[a]
Shipping cartons and collection containers	*36*
Polyethylene sample bottles	
16 oz	*600*
8 oz	*600*
4 oz	*600*
2 oz	*200*
Temperature probe	*3*
Test tubes, plastic (17x100 mm) disposable, 35 ml vials	*1000*
Spare sampler buckets and lids	*48*
Gummed labels	*1000*
Envelopes	*1000*
Notebooks	*12*
Data forms	*300*
Kimwipes or other tissues (boxes)	*36*
Shipping tape (rolls)	*12*

[a] Make up as needed

new tested electrode from the central laboratory.

2.2 Sampler

2.2.1 *Description*

The Aerochem Metrics sampler (Figure 2-1) for precipitation collection has two containers and a common lid. The lid seals the wet sample bucket when precipitation is not occurring, and thus minimizes evaporation and contamination by dry deposition or dustfall. When precipitation occurs, the lid moves off the wet bucket and covers the dry deposition bucket. The two buckets collect wet and dry deposition, respectively; they are fabricated of polyethylene, which is inert to inorganic substances (1,2). For organic constituents, glass or stainless steel containers should be used. The common lid is driven by a motor that is controlled by a rain sensor. The sensor contains a face plate with a grid closely spaced above it; when the grid and plate are shorted by a drop of water, the motor is actuated to lift the lid from the collection bucket. The sensor contains two heating circuits: one goes on when the temperature falls below approximately 2°C to melt snow or ice on the sensor, and the second goes on when the lid lifts off the sample bucket to heat the sensor to about 55°C. Heating increases the rate of water evaporation from the sensor, and hastens the closing of the wet bucket by the lid after precipitation ceases to minimize the exposure time to dry fallout. A seal between the bucket and the lid is achieved by a plastic foam gasket under the lid and by a spring load; however, with strong winds the lid may wobble, and some contamination may enter the wet bucket.

2.2.2 *Sampler Assembly, Operation, Installation, and Servicing*

For sampler assembly, operation, installation, and servicing, see the manufacturer's instructions.

2.2.3 *Sampler Installation (Additional Instructions)*

The precipitation collector should be mounted on the ground so that the rims of the buckets are level and at least 1 m above the ground. The collector should be properly anchored against strong winds; it may be shielded from the wind, but it should not be put in an area where excessive turbulence will be caused by the shield or where there are obstructions such as trees and buildings (Reference 3, Section 5). The rule for obstructions is that the distance between large obstacles and the collector (or rain gauge) should not be closer than two times the difference between the collector and obstruction heights, or the angle subtended by the obstacle at the site should be less than 30°. For the placement of any neighboring collectors and rain gauges of equal or smaller height, the distance between rain gauge and collector, or between collector and collector, should be at least equal to the height of the taller object Correct spacing should minimize interference as well as splash effects. To ensure that the collector dry bucket does not act as an obstruction for the wet bucket (or precipitation sample), the collector should be aligned either perpendicularly to the prevailing winds or with the dry bucket downwind of the wet bucket. The ground surface around the collector and rain gauge should have natural vegetation or gravel. It should not be paved because a hard surface may cause contamination from dust settling and water splashing into the collector or gauge.

2.2.4 *Acceptance Tests*

Sampler acceptance tests should be carried out before the collector is used in the field. These tests include: (1) sensor heating and actuating the lid when the sensor is shorted with water drops, (2) sensor cooling and return of the lid upon removal of the shorting material (water may be wiped dry), (3) sensor temperature attainment (50°-60°C) when the lid is off the wet bucket, (4) sensor temperature (1°-2°C) when ambient temperature falls below freezing and (5) lid cycling and sealing observation.

1. With the collector lid in its normal position over the wet bucket, add several drops of water to the sensor. The lid should move off the wet bucket within seconds, and should cover the dry bucket. After the water evaporates, the lid should return to cover the wet bucket. If there is no response, check to see that the sensor is connected to the motor box and that the power is on. If neither is the problem, the sensor or motor box is probably faulty and should be replaced. To remove the box, see manufacturer's instructions and Section 2.2.5.1.
2. Affix a temperature probe (thermistor, thermometer, or thermocouple) to the sensor plate near the screw head in the plate. Make sure good contact occurs, and cover the probe with an insulating material. Short the grid and plate together with a paper clip or coin. The temperature should start to climb in a few minutes, and should level off at 50° to 60°C. If the temperature setting is incorrect, it can be adjusted by turning the potentiometer screw, marked TH, inside the sensor box. Directions are given in the manufacturer's instructions.
3. Remove the shorting object. The lid should close immediately, and the temperature should fall to ambient.

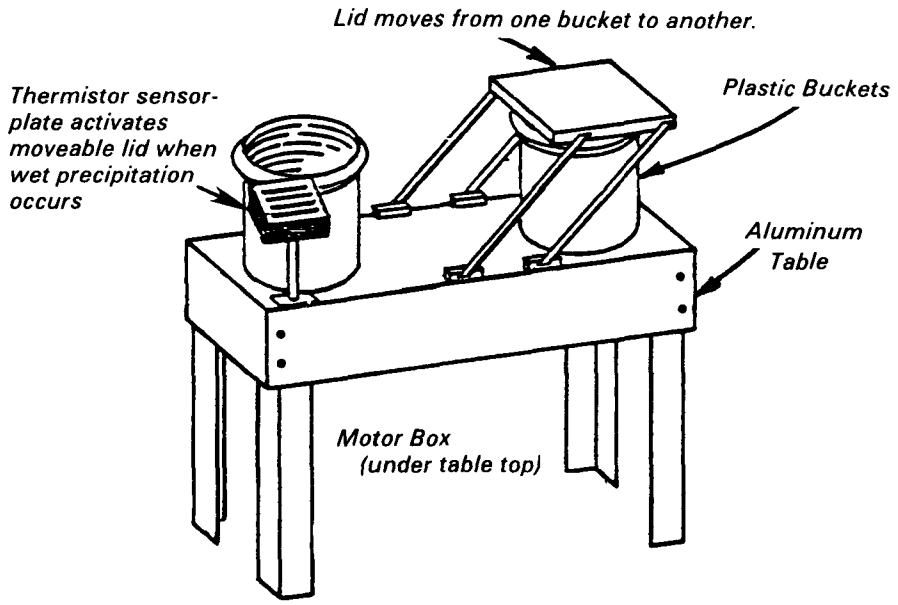

Figure 2-1. *Aerochem Metrics, wet/dry precipitation collector.*

4. During steps 2 and 3, check that the lid does not cycle. Also check the lid seals.
5. If the lid does not seal the wet bucket, check to see if the plastic foam gasket is secured in the correct postion. To remove the seal, see the manufacturer's instructions and Section 2.2.5. If this is not the problem, contact Aerochem Metrics, 6832 SW 81 St., Miami, FL 33143, telephone (305) 661-5213.
6. If the lid cycles while the sensor is shorted, the cause is probably a bad magnetic switch in the motor box or the lid arm that actuates the switch. The arm may be loose or may have moved too far out (more than 1 mm (1/32 in.)) from the switch as it passed the switch during lid movement. If the latter is the case, the lid arm can be adjusted and secured by tightening the 1/4 x 20 head screw in the bronze collar that secures the arm and the clutch to the motor shaft.
7. Check the sensor heating circuit at freezing temperatures for the Aerochem Metrics collector by using its standard heater/ammeter test plug which connects the sensor and the table cannon plugs. When the heater goes on, 0.6 to 0.7 A of current flows through the heater. The sensor can be cooled at warm temperatures by unscrewing the sensor probe from the collector table and by placing it in a refrigerator freezer compartment. A temperature probe on the sensor will give its temperature. Current should flow when the temperature falls to 0° to 2°C. The temperature setting of this circuit cannot be altered except by changing the resistor in the circuit.

If any of the above tests indicate a malfunction, either the problem must be remedied or the apparatus returned to the manufacturer. In general, the problem can be rectified by the operator replacing the sensor or the motor box. Do not replace any switches.

2.2.5 *Sampler Servicing (Additional Instructions)*

2.2.5.1 Collector Motor Box Removal—
1. With the collector power disconnected, unplug the electrical connector from the motor box.
2. Use a 7/16 in. hex wrench to remove the bolt which connects the connecting rod to the crank arm.
3. Place the collector lid in the middle position, and remove the wet bucket.
4. Remove the middle screw under the bucket.
5. Hold the motor box, and remove the remaining three (3) screws on the top outside surface of the collector.

2.2.5.2 Collector Lid Pad Removal—
1. With the collector power disconnected, place the collector lid in the middle position.
2. Remove the two (2) screws on the edge of the lid.
3. Remove the two (2) L-brackets into which the screws were threaded.
4. Remove the lid pad by prying it gently along its edge with a coin or a screwdriver.

2.2.6 *Calibration*

The precipitation collector does not require calibration, but its proper functioning should be checked frequently.

2.2.7 *Winterizing the Sampler*

Precipitation collection in the winter encounters more problems than in other periods. Snow may fall off the sensor before melting, and it may blow out of the collector bucket during heavy winds. In addition, the collector lid arms can freeze to the table, and the lid can freeze to the collector bucket. The last two problems are addressed here.

2.2.7.1 Prevention of Lid Freezing—To prevent the lid from freezing to the bucket, the following is recommended (4):
1. Attach a peaked roof (available from Aerochem Metrics) to the lid to prevent buildup of snow on the lid and to help insulate the lid.
2. Cut a small notch in one corner of the roof to insert a power cord.
3. Attach the power cord inside the roof to an air thermostat (Honeywell or WRAP-ON) set for about 2°C (36°F); and tape the cord to the roof arms.
4. Use a 60-W or 75-W light bulb as a heater; set the bulb on a piece of 9 mm (3/8 in.) Styrofoam on the lid top to prevent a hot spot.
5. Install a piece of 18 mm (3/4 in.) Styrofoam under the slope of the roof to minimize heat loss.
6. To compensate for the additional weight on the lid, add two large U-bolts to the counterweight shaft.

2.2.7.2 Prevention of Lid Arms Freezing to Table—To prevent freezing of the lid arms to the table, insulate one from the other.
1. Wrap and tape a plastic sheet around each lid arm to make a boot.
2. Tape one end of the boot to the table and the other end to the arm.
3. Check to see that the boot is secure and does not tear loose when the lid arms move between the closed and the open bucket positions.

2.3 Rain Gauge

2.3.1 *Description*

To reference all the precipitation amounts against a standard, use a recording rain gauge to measure the quantity of precipitation. Recording rain gauges are of two basic designs (identified by the principle on which they operate)—the weighing-type gauge and the tipping bucket-type gauge. Recording rain gauges should be capable of measuring precipitation to approximately 0.25 mm (0.01 in.), and be accurate to a few percent. For the weighing gauges, the sensitivity is a few hundredths of an inch (less than 1 mm) but the accuracy is independent of precipitation rate and is about 1% of full scale. For the tipping bucket gauges, the generally accepted accuracy is 1% for precipitation rates of 25 mm/h (1 in./h) or less, 4% for rates of 75 mm/h (3 in./h), and 6% for rates up to 150 mm/h (6 in./h). The precipitation rates are either measured directly or derived from the cumulative precipitation data. The weighing gauges generally have 8-day clocks and charts, and Aerochem Metrics recommends the Belfort 5-780 series, 0 to 30 cm (0 to 12 in.) dual traverse weighing gauge.

The rain gauge measures the amount of precipitation. The precipitation collector collects the sample for chemical analysis. The two devices are not interchangeable.

The recording rain gauge should have an event marker pen to indicate when the collector is open or closed. The times can be read off the 8-day chart. Aerochem Metrics will interface the Belfort rain gauge with its collector. The event pen typically is actuated, rising from its baseline, when the collector lid opens; and remains actuated until the lid closes, whereupon the pen falls to its baseline position again. To prevent the event marker pen from interfering with the sample trace pen on the weighing gauge, the two are offset on the time axis. Thus only one pen can be set at the correct time. Care must be taken to use the correct event beginning or ending time. Since the operator is seldom present to observe the collector behavior during an event, the event marker pen is invaluable for indicating a collector malfunction.

2.3.2 *Rain Gauge Assembly, Operation, Installation, and Servicing*

The rain gauge assembly, operation, installation, and servicing should be

performed according to the manufacturer's instructions.

2.3.3 *Rain Gauge Installation (Additional Instructions)*

The rules for obstructions (Section 2.2.3) pertain here also. The rain gauge should be mounted on a firmly anchored support or base so that its funnel rim is level and at about the same height as the collector rim to enable comparisons of collection amounts between the two. The Belfort gauge can be mounted with three bolts to a level platform of 30.5 x 30.5 x 0.48 cm (12 x 12 x 3/16 in.) hot-rolled steel, welded to a 5.1 cm (2 in.) diameter 1.0 m (3.5 ft.) pipe. The pipe is sunken in cement for stability, and it should extend above ground about 0.53 m (21 in.) to bring the gauge to the same height as the sampler. The level of the gauge can be adjusted by the addition of washers to the bolts. The gauge level can be checked with a carpenter's level placed at two intersecting positions. The gauge mouth should be high enough so that it will not be covered by snow.

In open areas, a wind shield (e.g., swingleaf wind shields such as the one used by the U.S. Weather Service) should be used for the rain gauge.

For rain gauges which contain a clock (recorder), the access door to the chart drive should be on the leeward side of the gauge and should be kept closed to minimize dirt and moisture affecting the chart and the clock mechanism. The ground surface around the rain gauge be natural vegetation or gravel; paving may cause splashing of dirt or water into the gauge. Never oil any part of the gauge except for the chart drive, and oil this only when necessary with a light machine oil.

2.3.4 *Acceptance Tests*

Rain gauge acceptance tests should include checks on (1) sensitivity and accuracy, (2) clock function, (3) pen and recorder functions and (4) event pen function.

1. With the weighing rain gauge level and zeroed, add water equivalent to several inches. For the Belfort rain gauge 5-780 series, 1 in. = 820 g.
2. If the rain gauge does not read correctly, adjust it according to the manufacturer's instructions (Section VI, Belfort manual).
3. With the pens inked and a chart in place, turn the drum to produce a zero-level trace; add water equivalent to 0.51 mm (0.02 in.), and measure the response. (For the Belfort recording rain gauge 5-780 series, 0.51 mm = 16.4 g (0.02 in.). If there is no response or if the response is more than 1.0 mm (0.04 in.), contact the manufacturer. For tipping bucket gauges, add water in 0.25 mm (0.01 in.) increments, and note when the bucket empties.
4. Wind the chart drive (or clock) until it is fully wound, and set it for the correct time. Note that the event and weight trace pens are offset about 4 h so that they cannot interfere with each other. Set the weight pen for the correct time. Make sure that the pens (weight and event) are writing. If contact between the pen tips and the chart paper is made but writing does not occur, draw some ink with a toothpick down the pen tip to form a small pool at the contact point.
5. Let the clock run for at least 24 h, and check the pen traces and the clock time. The time should be correct to within 0.5 h/24 of running. If the clock does not meet this specification, it should be replaced. If any other problems are evident but are not addressed in the manufacturer's instructions, call the manufacturer.
6. To check the event pen function, connect the wires to the proper terminals on the collector and the rain gauge. Short the collector rain sensor, and observe if the event pen moves up about 3 mm (1/8 in.) from its baseline. Remove the short, and note if the event pen falls back to its baseline position. If problems with the event pen occur, notify Aerochem Metrics.

2.3.5 *Calibration*

The rain gauge should be calibrated at each 25 mm (1 in.) level according to the manufacturer's instruction manual after installation and at least at semi-annual intervals thereafter. In addition, checks should be made at half and full scale (on the 0 to 150 mm or 0 to 6 in. range) at monthly intervals. For the weighing gauge, a set of weights should be available from the manufacturer for the checks; if the weights are not available, weighed quantities of tap water can be used. For the Belfort gauge, 25.4 mm = 1 in. = 820 g. With a dual traverse pen recorder such as the Belfort (0 to 6 in. and 6 to 12 in. traverses), the range 127 to 178 mm (5 to 7 in.) has been found difficult to calibrate and to keep calibrated; however, this range is generally not needed because the rain gauge bucket can be emptied after each event or week of events. In the winter, antifreeze must be added to the weighing gauge bucket to help melt the captured snow (Section 2.3.6). Thus a severe or prolonged storm can bring the gauge to the 127 to 178 mm (5 to 7 in.) level. If it is found that a calibration problem exists in the 127 to 178 mm (5 to 7 in.) range, it is recommended that the bucket be emptied whenever the 127 mm (5 in.) range is approached and that new antifreeze be added.

The tipping bucket gauge is calibrated by adding a controlled volume of water, using a slow drip technique. It may be necessary to adjust the set screws which limit the travel range of the tilting bucket

2.3.6 *Winterizing the Rain Gauge*

In the winter, rain gauge problems can be due to (1) snow filling or drifting out of the gauge, (2) freezing of the collected precipitation which can damage the gauge bucket, and (3) the cold affecting the clock and/or ink.

For the weighing gauge, the following precautions should be taken:

1. Remove the funnel, which is generally in the inlet mouth.
2. Add approximately 1600 g (2 in.) of an ethylene glycol-methyl alcohol (40:60) antifreeze mixture (Belfort manual, Section 4.3). To retard evaporation, add 180 ml (6 oz) of a 10W motor oil. Do not adjust the gauge reading after adding the antifreeze. The gauge will indicate rainfall of approximately 50 mm (2 in.). The ethylene glycol-methanol with precipitation added to yield 150 mm (6 in.) of solution will freeze below -40°C (-40°F). For less severe conditions, use approximately 50 mm (2 in.) of ethylene glycol antifreeze alone. When enough precipitation has been collected to yield 127 mm (5 in.), the mixture will be liquid at -24°C (-12°F). Since the weighing gauge is most difficult to keep in calibration in the 127 to 178 mm (5 to 7 in.) range, empty the gauge when the 127 mm (5 in.) level is reached, and add new antifreeze. The antifreeze will not only aid in melting the snow, but will prevent freezing of collected precipitation and resulting damage to the container.
3. In extremely cold periods, the clock (if not new) may run slowly, and/or the ink may not flow. Low-temperature ink is available from the rain gauge manufacturer. If the clock is a problem, replace it.

For the tipping bucket rain gauge, winterizing consists of using a heater to melt the snow in the funnel and the bucket.

2.4 Routine Sampler and Weighing Rain Gauge Checks and Maintenance

The following tests or procedures should be carried out on a routine basis on the precipitation collector and rain gauge.

2.4.1 *Sampler Tests*

1. *Collector Sensor Test* - At daily or weekly intervals, short the sensor with a piece of metal or some water to check the lid opening and the sensor heating functions. When the sensor short is removed, the lid should close immediately, and the sensor should cool. If an event pen is used, mark its traces on the rain gauge chart for these tests. Clean the sensor at monthly intervals or as needed.
2. *Inspection of Dry Collector Bucket* - If the collector has a dry bucket (as the Aerochem Metrics model has), check the bucket after an event or a time period in which an event depositing more than 0.25 mm (0.01 in.) of precipitation has occurred to ascertain if the bucket contains or did contain any precipitation. Precipitation in the dry bucket is possible evidence of a collector malfunction. Possible causes of such a malfunction are (1) a dirty or faulty sensor, (2) a too high sensor heating temperature and/or a low precipitation rate, (3) a defective magnetic mercury switch in the motor box, or (4) the lid arm too far out from the magnetic switch to actuate it. All of the above reasons, except for the dirty or faulty sensor, can cause lid cycling.
3. *Test of Dry Sample Bucket* - At weekly intervals, if no event has occurred, return the sample bucket to the laboratory and/or test it for cleanliness. To test it in the field, add 250 ml of deionized distilled water, swirl the bucket so that its interior is washed, and measure the specific conductance of the solution. If the conductance is over 2 umho/cm, rinse the bucket until the rinse water conductance is less than 2 umho/cm. Conductivities greater than 2 umho/cm indicate that the bucket is contaminated due to poor initial cleaning, dry deposition and/or handling. If high conductivities are frequent at a site, poor collector sealing and/or an operator handling problem are probably present and must be corrected.
4. *Minimizing Lid Lifting by Strong Winds* - Where strong winds are common, check the lid to be sure it does not wobble or is not lifted off the bucket by the wind. If either is a common occurrence, replace the springs on the collector with stronger ones, and readjust the lid arm and the counterweight balance.
5. *Replacement of Collector Lid Seal* - Replace the plastic foam underseal on the lid annually or as needed (Section 2.2.5) because it will deteriorate with time.
6. *Examination of the Event Pen Marker Trace* - At weekly intervals, inspect the event marker trace to see if the lid cycled. The event trace openings and closings should correspond to the beginning and end of the event as indicated by the slopes of the sample weight trace. Numerous up and down markings in short time intervals indicate lid cycling. Some cycling traces may occur when no event is apparent; this can occur during short, light rain events. Cycling during a heavy rainfall is symptomatic of a collector problem. No lid movement traces when the sample weight trace shows that an event occurred also indicates a collector malfunction.
7. *Cleaning Techniques and Schedule* - Wash the collector rain sensor monthly with deionized water to remove dirt, salt, and film buildup. If a film persists, clean the sensor grid and plate with detergent and a toothbrush. Wipe the rim of the dry bucket weekly with clean tissues (e.g., Kimwipes) to prevent carry over of dustfall to the sealing gasket and then to the wet bucket.
8. *Winter Maintenance (Section 2.2.7)* - Check the sensor temperature when the ambient temperature falls below freezing to ensure that the heater is working. This may best be done by adding snow to the sensor. If freezing occurs, encase the lid arms in plastic, and tape one end of the boot to the table. If necessary to prevent the lid freezing to the bucket, attach a heater (e.g., a 60-W light bulb) to the top of the lid.
9. *Lid Cycling* - As a common occurrence, lid cycling can be due to several causes. First, cycling during low rainfall can take place if the hot sensor plate dries the sensor rapidly. If this is a frequent occurence, lower the temperature by turning the screw marked TH (see manufacturer's instructions). Second, the lid arm can be loose or too far out from the magnetic switch in the motor box. Third, the switch may be bad. (For the last two, see Section 2.2.4, step 5).
10. *Lid Malfunctioning* - Another common source of collector problems is a faulty sensor. The lid may remain open, not open or open only periodically. The lid staying open indicates a shorted rain sensor. A short can be verified by unscrewing the sensor cannon connector at the motor box. The lid should then close over the wet bucket; if the lid does close, check if dirt is shorting the sensor plate and grid. If so, clean with a toothbrush or by passing a card between the grid and plate. For the other problems, the simplest remedy is to replace the sensor.
11. *Site Maintenance and Inspection for Obstacles* - Periodically, mow the grass and inspect the site area for new obstacles (e.g., a growing bush or tree) that may become an obstacle even though not one initially.
12. *Other Tests* - Any other maintenance advised by the equipment manufacturer should be carried out at the recommended time periods.

2.4.2 *Weighing Rain Gauge Tests*

1. *Adjusting the Zero Setting of the Rain Gauge* - At daily or weekly intervals with no precipitation in the rain gauge, adjust the zero setting if necessary with the (red) fine adjust screw. The zero setting will fluctuate with temperature, but generally not more than ±0.75 mm (0.03 in.).
2. *Checking the Rain Gauge Pail Level* - When the rain gauge pail is removed, be sure it is replaced correctly so that it is level.
3. *Adjusting and Winding the Rain Gauge Clock* - Weekly, wind the clock (or chart drum) on the weighing gauge, and correct the time setting if necessary. Be sure to correct for backlash and to set the time correctly with respect to a.m. and p.m. Note the event pen times are offset from the weighing pen by about 4 h; set the weighing pen to the correct time.
4. *Rain Gauge Check* - Once a month, add several known weights of tap water to the rain gauge to see that it is measuring correctly. For the Belfort weighing gauge, 25.4 mm = 1 in. = 820 g.
5. *Inspection of Rain Gauge Pens and Ink* - Weekly, inspect the pens to see if they have ink and are writing. If they are not writing, clean the pens, refill them, and be sure they

are working. To help start the pens writing, use a flat toothpick to make the ink from the pen reservoir form a small pool at the point of contact between the pen and the chart.

6. *Rain Gauge Chart Replacement* - At the prescribed interval, generally weekly, remove the old chart and replace it with a new one. Close the access door to the chart.
7. *Rain Gauge Level Check* - At bimonthly intervals, measure the gauge level to ensure that it is still horizontal.
8. *Rain Gauge Calibration* - At 6-mo intervals (unless test 4 shows it is necessary sooner), calibrate and adjust the rain gauge at each 25 mm (1 in.) level.
9. *Winter Maintenance* - Remove the funnel that is generally in the inlet, and add ethylene glycol antifreeze to the pail (Section 2.3.6).
10. *Other Tests* - Any other maintenance recommended by the manufacturer should be carried out.

2.4.3 *Corrective Action*

Record any indication of a malfunction in the logbook. Attempt to diagnose and correct the problem as soon as possible. If the problem cannot be corrected, ask the field manager or the manufacturer for advice and direction. Record the diagnosis and corrective action taken in the logbook.

2.5 Sample Collection and Handling

2.5.1 *Avoiding Contamination*

Careful handling of equipment and samples to prevent contamination is extremely important. The dissolved substances have very low concentrations, so any contamination will result in large errors. Thus all articles that contact the samples must be clean. All the buckets and containers have been cleaned at the laboratory. Only the materials (e.g., sample buckets, electrodes, cells, and probes) that are used and not returned to the laboratory must be rinsed. All rinses should be done with deionized or distilled water; either can be purchased at markets or drug stores. The water should have a conductivity less than 1.5 umho/cm; if not, try another source. Never use tap water for cleaning.

2.5.2 *Sampling Schedules*

Sampling schedules generally used include weekly, daily, event, and subevent. The sample should be removed at the same time for each sampling period unless precipitation is occurring at that time. Then a delay of up to 12 h for daily sampling and 24 h for weekly is permissible. For weekly schedules, remove the sample on the same day each week, and never extend the period more than 24 h. For event schedules, remove the sample immediately after the event or at a set time daily.

For sequential schedules, treat the samples similarly to the event samples. Since one event may produce several samples, it is important to identify each sample in the chronological order of occurrence. For sequential sampling it is important that the time corresponding to each subevent specimen be known so that correlations with other data can be made.

The samples are identified and measured for amount, pH, and conductivity. They are then sealed and stored in a refrigerator until shipment (Sections 2.6 and 2.7).

2.5.3 *Collection and Handling Procedures*

2.5.3.1 Wet Bucket Labeling—Immediately before use, label the sealed sampler wet bucket (or for sequential sampling, the capture bottles). The label should contain the station identification, the date used, and the bucket weight (without lid). After the sampling period, the final weight is added. Use a pencil or ball point pen to inscribe the labels.

2.5.3.2 Container and Sample Handling—The containers for the wet samples have been cleaned and do not require rinsing in the field before use. Never substitute a dry bucket for a wet bucket. At all times, take care not to contact the inside walls of a container, a lid or a cap with any object-especially one's finger which can leave a deposit of salt and oil. The container should be capped until immediately before use, and must be resealed immediately after use. Since human breath contains ammonia, do not exhale into a container.

1. Do not remove a clean bucket from the plastic bag in which it is shipped until it is to be placed in the sampler.
2. Check the wet sample bucket for precipitation at the scheduled times. Move the lid from the wet bucket by contacting a coin or metal object to the sensor gridplate to activate the motor and move the lid to the dry sample bucket. The lid will remain open until the metal object bridging the sensor is removed. NEVER TRY TO FORCE THE LID OPEN BY HAND FROM THE WET BUCKET WITHOUT SHORTING THE SENSOR.
3. If the wet sample bucket contains precipitation, remove it from the collector, and replace it with a clean, weighed, labeled bucket.
4. Remove the lid from the new bucket after it has been placed in the sampler, and cover the removed sample bucket with the new lid to minimize the chance of contamination from the lid Fasten lid on with masking tape.
5. Remove and replace the rain gauge chart. Record readings (times of start and end of precipitation) on data form. For the final amount of precipitation reading, use the maximum value on the rain chart at end of event because loss of water by evaporation will occur on standing.
6. Swirl the sample to help assure that it is homogeneous
7. If there is no antifreeze in the rain gauge, empty its bucket. If there is antifreeze, do not empty the bucket until the reading is 127 mm (5.0 ± 0.3 in.); then add new antifreeze.
8. If no sample is present, seal the empty bucket and return it to the laboratory, or rinse it in the field for reuse. In the first case, proceed to Section 2.7.3; in the latter case, rinse the bucket with 250 ml of distilled or deionized water, and measure the conductivity of the last rinse. This measurement provides a blank which reflects the previous cleaning, operator handling, collector sealing, and so forth. Check the conductance before using the distilled deionized water. After the container is cleaned, shake it dry and reuse it.
9. For event or daily sampling, minimize the number of buckets required as well as storage and shipment space, by transferring the sample from the bucket after it is weighed to a 500-ml labeled, wide mouth polyethylene bottle. If sufficient sample is present (e.g., more than 300 ml), use some (about 50 ml) to prerinse the shipping bottle. One 500-ml bottle per event is sufficient sample for all measurements; the rest of the sample may be discarded. Make the sample transfer directly from the bucket to the bottle, and rinse the bucket with distilled deionized water before reuse
10. For sequential samples, which are collected through a funnel directly into prenumbered, prelabeled polyethylene bottles, seal the bottles immediately after the samples are collected.

The samples are now ready for field measurement; check that the containers are sealed and correctly labeled.

2.6 Field Measurements

The field measurement procedures for weighing, pH, specific conductance, and temperature should be identical to those used by the central laboratory. Each bucket is weighed both before and after sampling. If sufficient sample (more than 70 g) is available, its pH and conductivity are measured both in the field and at the laboratory. These measurements are used as a check to detect sample changes. If less than 70 g of sample are collected, forward the sample to the laboratory without measuring its conductivity and pH.

2.6.1 *Weighing Sample Containers*

2.6.1.1 Balance Specifications—The balance must have a capacity of 20 kg and a precision of at least ±10 g.

2.6.1.2 Procedure—

1. With the balance level, adjust to zero (see manufacturer's instructions).
2. Before sampling, place a new bucket without its lid (and/or bottle with its lid) on the balance, and weight it to the nearest gram. Do not allow the bucket lid's inner surface to contact any object. Record the weight on the data form and on the container label (Section 2.8.3).
3. After sampling, tap the lid to knock any water drops off its inside surface into the bucket, wipe off the outside of the bucket, remove the tape and the lid from the bucket, and place lid with its outer surface on the table.
4. After the balance has been zeroed, place the bucket without its lid on the balance pan, and weigh to the nearest gram.
5. Record the weight on the bucket label and on the field data form.
6. Subtract the initial weight of the empty container from the final weight of container plus sample to obtain the sample weight.
7. Avoid breathing onto the sample to prevent ammonia contamination.
8. If sample is more than 70 g, remove an aliquot of about 20 g for conductance and pH measurements. If sample is frozen, allow it to melt completely in its closed container, and swirl the container to assure homogeneity before removing the aliquot. Reweigh sample plus container to obtain aliquot weight.
9. Seal container with lid; obtain and record total weight to be shipped to the central laboratory. If sample is in bucket, secure the lid with a rubber mallet.

2.6.2 *Specific Conductance*

2.6.2.1 Apparatus Requirements—The conductivity meter and cell must have a measurement range of 0 to 1000 umho/cm, a precision of ±0.5% of range and an accuracy of ±1.0% of range. The range most frequently used is 10 to 100 umho/cm. A temperature-compensated cell with a cell constant of 1 is preferred.

2.6.2.2 Background—The conductivity of a solution is the reciprocal of its resistance, and is related to the total concentration and the species of free ions present. Since the conductivity (or resistance) also depends on the electrode area and separation as well as on the temperature, the measuring apparatus must be calibrated to obtain the cell constant or to adjust the meter. For calibration, use a KCl solution of known conductivity, and be sure the temperature of the KCl standard and the sample are the same. For rain samples, use a 0.0005M KCl solution with a specific conductance of 74 umho/cm at 25°C.

The conductivity of the sample can be measured on the same aliquot as used for pH. If this is to be done, measure the conductivity before measuring the pH to avoid any possible error due to salt contamination from the pH electrode.

2.6.2.3 Procedure—Measure the specific conductance for all samples over 70 g, using the procedure in Method 120.2 (Specific conductance) (5). This procedure is based on the method in standard texts (6,7).

2.6.2.3.1 Scope and application—This method is applicable to rain, drinking, surface, and saline waters and to domestic and industrial wastes.

2.6.2.3.2 Summary of Method—

1. Measure the specific conductance of a sample by using a self-contained conductivity meter, Wheatstone bridge-type or equivalent.
2. Analyze samples preferably at 25°C. If not and if the meter does not have automatic temperature compensation, measure at 20° to 28°C, and correct to 25°C.

2.6.2.3.3 Comments—

1. Standardize the instrument with 74 umho KCl solution before daily use.
2. Keep the conductivity cell clean.
3. Minimize the temperature variations and corrections—a large source of potential error.

2.6.2.3.4 Sample Handling and Preservation—

1. Perform analyses either in the field or the laboratory.
2. If analysis is not completed within 24 h of sample collection, store sample at 4°C. Wash the apparatus with high quality distilled deionized water, and prerinse with sample before use.
3. Remove sample aliquot for measurement, and seal the bulk sample.

2.6.2.3.5 Apparatus—

1. Conductivity bridge: range 1 to 1000 umho/cm.
2. Conductivity cell: cell constant 1.0, or dipping-type microcell with constant, 1.0 (e.g., YSI 3403 or equivalent).
3. Thermometer.

2.6.2.3.6 Reagents—

1. Standard 0.0005M KCl: supplied by the central laboratory.

2.6.2.3.7 Cell Calibration—The analyst should use the standard KCl solution and the table below to check or to calibrate the cell, if the meter does not have automatic temperature compensation.

Conductivity of 0.0005M KCl

°C	*Micromhos/cm*
20	*66.8*
21	*68.2*
22	*69.5*
23	*71.0*
24	*72.4*
25	*73.9*
26	*75.4*
27	*76.9*
28	*78.4*

If the apparatus cannot be adjusted, record the measured value of the standard on the data form. NOTE: Do not insert the cell into the bulk solution.

2.6.2.3.8 Procedure—

1. Follow the manufacturer's instructions for the operation of the instrument.
2. Allow sample aliquot to come to room temperature (23°-27°C), if possible.
3. Determine the temperature of sample, ±0.5°C. If the temperature of the sample is not 25°C, make the correction (Section 2.6.2.3.9) to convert reading to 25°C. After measurement, either discard the solution or save it for pH measurement; never pour the solution back into its container. Record the data in logbook.

2.6.2.3.9 Calculation—The following temperature corrections are based on the standard KCl solution, and are used with instruments with no automatic temperature compensation.

1. If the temperature of the sample is below 25°C, add 2% of the reading per degree.

2 If the temperature is above 25°C, subtract 2% of the reading per degree. Report results as specific conductance, (umho/cm) at 25°C on the data form.

2.6.2.3.10 Precision and Accuracy—

1 For 41 analysts in 17 laboratories analyzing six synthetic water samples containing increments of inorganic salts with conductivity of about 100 umho/cm at 25°C the standard deviation was about 7%, and the accuracy was within 1 to 2%.
2. In a single laboratory (Environmental Monitoring and Support Laboratory, Cincinnati, OH) using surface water samples with an average conductivity of 536 umho/cm at 25°C, the standard deviation was ±6 umho/cm

2.6.2.4 Conductance Problems and Tests—The conductivity cell generally has few problems; store the cells as recommended by the manufacturer. However, the working conductivity standard is a very dilute 0.0005M KCl, which may degrade slowly or become contaminated easily. To minimize errors due to changes in the calibration standard, replace the 74 umho/cm working solution at approximately monthly intervals.

When a new working standard is received, check it against the old working standard. Report the measured value of the old working standard to the laboratory, and always return enough of the old standard to the central laboratory so that it can be remeasured. Never return the old working standard before checking it against the new solution

Seal and store the conductivity standards in a refrigerator to minimize changes. Generally, changes of less than 5% will occur in a month and may be ignored. If the change is more than 5%, notify the central laboratory at once for a new standard.

If the conductivity meter has its own builtin standardization circuit, use it to check the KCl standard by following the manufacturer's instructions. If the KCl standard has changed from its original value by more than 5%, inform the central laboratory immediately. Since the internal meter calibration is not a traceable standard, it must not be substituted for the KCl solution.

Another means of evaluating the working conductivity standard is to use the same procedure as for rain samples to measure unknown test samples received monthly from the central laboratory. Return the test samples to the central laboratory with the next sample shipment for remeasurement. If the laboratory finds that the station conductivity differs from the laboratory value by more than 10%, the laboratory will inform the proper personnel and replace the old conductivity standard. Store the cells as recommended by the manufacturer.

2.6.3 *pH*

2.6.3.1 Apparatus Requirements—The pH meter and electrode must be capable of measuring to ±0.02 unit precision with an accuracy of 0.05 unit. Meters should have an impedance of at least 10^{11} ohms. A combination glass and reference electrode of the nongel type with an unprotected membrane bulb is preferred. The combination electrode requires less sample and less washing than two separate electrodes. Electrodes with shielded bulbs are more difficult to clean, and thus are more prone to yield errors. When a new electrode is obtained, equilibrate it overnight in a solution recommended by the manufacturer before it is used. Store the electrode in pure water, in a 74 umho/cm KCl conductivity standard, or in a 10^{-4}N acid (H_2SO_4) solution. These storage media may cause the electrode to require longer times for stabilization than do the concentrated buffer solutions, but they increase the life of the electrode.

2.6.3.2 Background—The pH of a solution is related to the free acid activity by the equation

$$pH = -\log (H^+) \qquad 2\text{-}1$$

where (H^+) is the H^+ activity or free H^+ concentration. Thus pH does not measure the total acid concentration.

Use a pH meter which measures the difference in electrical potential between a reference electrode and an H^+ (glass) electrode. The glass electrode potential varies as the activity (or effective concentration) of H^+ in solution varies. Although the meter actually measures electrical potential (volts), it is generally calibrated to give data as pH.

Each station will receive the required calibration buffer solution from the central laboratory. The stations should notify the laboratory when the buffers need to be replaced.

2.6.3.3 Procedure— The pH is measured for all samples weighing over 70 g. If the measurement is made on the same aliquot as that used for conductivity, the pH must be measured after the conductivity by following Method 150.2 (Electrometric) taken from *Methods for Chemical Analysis of Water and Wastes (5).* This procedure is based on the method in standard texts (6,7).

2.6.3.3.1 Scope and Application— This method is applicable to rain, drinking, surface, and saline waters.

*2.6.3.3.2 Summary of Method—*The pH of a sample is determined electrometrically by using either a glass electrode with a reference electrode or a combination electrode

2.6.3 3.3 Sample Handling and Preservation—

1 Perform the analyses on site immediately after sample collection.
2. After removal of sample aliquot, seal the bulk sample container; if the container is a bucket use a rubber mallet to secure the lid.

2.6.3.3.4 Interferences—

1. The glass electrode, in general, is not subject to solution interferences from color, turbidity, colloidal matter, oxidants, reductants, or high salinity.
2. Sodium error at pH levels greater than 10 is generally not a problem since precipitation rarely has such a high pH, but the error can be minimized or eliminated by using a "low sodium" error electrode.
3. Temperature effects on the electrometric measurement of pH arise from two sources. The first is the change in electrode output at various temperatures; this interference can be controlled with instruments having temperature compensation or by calibrating the electrode-instrument system at the temperature of the samples. The second is the pH change inherent in the sample at various temperatures; this error is sample dependent, and cannot be controlled; so it should be noted by reporting both the pH and the temperature at the time of analysis.

2.6.3.3.5 Apparatus—

1. pH meter (Field Model): A wide variety of instruments are commercially available with various specifications and optional equipment. The meter should have both an intercept and a slope adjustment. Older pH meters were calibrated by using a single buffer and by electronically setting the intercept; this single point calibration assumed that the correct theoretical slope was achieved by the electrode being used, but this was a poor assumption because commercial electrodes have slopes which vary from 95% to 102% of the theoretical value (8). Modern pH meters therefore allow calibration at two points: one to establish

the intercept and the other to establish the slope. The instrument should be left in the "standby" mode, or it should be allowed to warm up at least 1/2 h before measurements ard made.

2. Glass electrode.
3. Reference electrode a calomel, silver-silver chloride, or other reference electrode of constant potential. NOTE: combination electrodes with both measuring and reference functions are convenient. The pH electrodes should be stored in deionized water, in a 74 umho/cm KCl standard, or 10^{-4}N acid (H_2SO_4) solution. Prior to use, the pH electrode should be thoroughly rinsed with deionized water.
4. Thermometer or temperature sensor for automatic compensation.

2.6.3.3.6 Reagents—Standard buffer solutions are available from the central laboratory.

2.6.3.3.7 Calibration—

1. Because of the wide variety of pH meters and accessories, detailed operating procedures cannot be incorporated into this method. Each analyst must be acquainted with the operation of the site system, and must be familiar with all instrument functions. Special attention to care of the electrodes is recommended.
2. Each instrument/electrode system must be calibrated at a minimum of two points that bracket the expected pH of the samples and that are approximately three pH units apart. Most rainwater samples have pH values of 3.0 to 6.0 or 4.0 to 7.0, depending on the area sampled; therefore, the pH 3.0 and 6.0 or the pH 4.0 and 7.0 buffer solutions are suggested.
3. Before calibration, "top off" the electrode (if it is not sealed) with filling solution available from the manufacturer, and rinse carefully. Measure both the standard buffers and the samples at the same temperature without allowing the electrode to touch the bottom of the solution vessel.
4. Various instrument designs may use a "balance" or "standardize" dial and a slope or temperature adjustment, as outlined in the manufacturer's instructions. The pH 6.0 or 7.0 buffer is used to set the intercept of the pH response with the standardization knob; the 3.0 or 4.0 buffer is used to adjust the slope of the pH response with the slope or temperature function control. After each calibration, rinse the electrode thoroughly with deionized water. Repeat the calibration until both readings are within ±0.02 unit of the buffer value. After the last buffer measurement, measure the pH of deionized water in several test tubes until a stable value is obtained to minimize the chances of buffer contamination of any sample. Calibrate the pH meter before and after each set (at most 20) of samples measured at one setting.

2.6.3.3.8 Procedure—

1. Standardize the meter and the electrode system (Section 2.6.3.3.7).
2. Place the sample in a clean vessel that has been rinsed with the sample from the conductance measurement. (Use the rinse for the electrodes below.) Use a sufficient volume of sample to cover the sensing elements of the electrodes. Never insert the electrode into the bulk sample container.
3. If the sample temperature differs by more than 2°C from that of the buffer solution, correct the measured pH values. Some instruments are equipped with automatic or manual compensators that electronically adjust for temperature differences. Refer to manufacturer's instructions.
4. After rinsing and gently shaking the electrodes (do not tap on a hard surface), immerse them into the sample test vessel. To ensure even contact between the sample and the electrode(s) sensing elements, swirl the sample gently for a few seconds after immersion.
5. Allow the electrode(s) to equilibrate. Do not disturb the solution and the air-water interface while measuring. If sample is not in equilibrium with the atmosphere, pH values will change as the dissolved gases are either absorbed or desorbed. Record sample pH and temperature in the logbook.

2.6.3.3.9 Calculation—Read pH meters directly in pH units. Report the pH to the nearest 0.01 unit and the temperature to the nearest degree (°C) on the data form.

2.6.3.3.10 Precision and Accuracy—

1. For 44 analysts in 20 laboratories, six synthetic water samples containing exact increments of H^+ - OH^- ions in the pH range 3.5 to 8.0, the standard deviation was 0.14 unit.
2. In a single laboratory (Environmental Monitoring and Support Laboratory, Cincinnati, OH) using surface water samples with an average pH of 7.7, the standard deviation was ±0.1.

2.6.3.4 Electrode Problems and Tests—One of the chief problems that occurs with pH measurements is the aging of the electrode. Diagnostic tests for this are presented here.

The first means of diagnosing electrode or procedural problems is the use of test samples sent out to the field stations by the central laboratory on a monthly basis. The samples have rain-type pH and conductance values, and should be measured for both variables; these will be measures of the station's accuracy if the laboratory value is assumed to be correct and if no solution change occurs in shipment. The samples are returned to the laboratory with the results for recheck and evaluation. If the field pH value differs from the laboratory by more than ±0.15 unit, the pH electrode probably needs replacing. Consultation with the field operator on the technique should confirm the source of the problem.

A second test is the use of a reference solution, which has a known pH and a conductivity similar to those of rain samples, to check the pH electrode at biweekly intervals. The measurement procedure should be identical to that used for a rain sample. Store the solution in a refrigerator, and replace it when needed or when the solution pH or conductivity appears to have changed.

From the average value and deviation of five or more test samples measured consecutively and from the time required to attain stable readings, electrode performance and precision can be evaluated. The standard deviation (s) is calculated from the relation:

$$s = [\Sigma(x_i - \bar{x})^2 / (n - 1)]^{1/2} \qquad 2\text{-}2$$

where x_i and $\bar{x}$ are the measured and the average pH readings of the series and where n is the number of sample tubes measured.

For acceptable electrode behavior, s should not be greater than 0.05 pH unit for the test sample set, and the average pH value should agree with the previous month's value to ±0.10 unit. Frequently, the first measurement will differ more than ±0.1 unit from the others. If so, this value should be excluded from the average, and a sixth sample tube should be measured. If this poor first reading behavior is exhibited by an electrode, and if sufficient precipitation sample exists, two tubes of each precipitation sample should be measured for pH, and the second value entered on the data form. The time to attain a stable reading, (i.e., when pH is constant to ±0.02 unit

for 1 min) should be less than 5 minutes for a well-behaved electrode Results of these tests serve as guides for both the measurement technique and the equilibration time to be used for precipitation sample measurements If an electrode test at any time shows behavior poorer than that given by the above criteria, the electrode should be replaced. If the average pH has changed from the previous month's by more than 0.10 unit, check the solution conductivity. If the conductivity has changed by more than 10% from its original value, the solution has degraded and should be replaced. Always return enough of the solution so that it can be checked by the laboratory.

2.6.4 *Temperature*

2.6.4.1 Requirements —The temperature probe must have an accuracy of at least 1°C and a precision of ±0.5°C. A thermistor, thermocouple, or thermometer can be used The probe should be calibrated yearly by the central laboratory.

2.6.4.2 Procedure—

1. Before measuring a solution, wash the temperature probe, and shake it dry
2. To minimize contamination, do not insert the probe into any solution until after the other measurements (i.e., conductivity and pH) have been made, or use a second sample treated in a similar manner as the first only for temperature measurement
3. Read and record the temperature to the nearest 0.5°C.

2.7 Sample Indentification, Preservation, Storage, and Shipment

2.7.1 *Background*

Sample degradation can be due to chemical interactions—for example, with particulates or gases, or biochemical reactions Preservation of sample intergrity after removal from the sampler can be maximized by filtration, sealing the sample, and storage in the dark at low temperatures (e.g , about 4°C). Do not freeze. To minimize contamination, perform filtrations only in the central laboratory Although chemical preservatives are effective for various constituents, they can interfere in some of the measurements or analyses, and so are used only in special cases (e.g., for SO_2 measurement).

Samples must be adequately identified so that they can be readily and correctly matched up with their data forms. The sample label should contain station identification, sampling date, and sample weight Use a pencil or a ball point pen to mark the label so that it is still legible if it gets wet

In the case of duplicate (collocated) or sequential samplers, treat each sample container as a separate sample For duplicate samplers, distinguish the samples by adding a -1 and -2 to the station identification space on the data form. For sequential samples, add -11, -12, -13, and so forth to denote the chronological order of collection for each event.

Sample shipments are made weekly to the central laboratory for economic reasons for weekly, daily, event, or sequential samples. Generally, the shipment should be made early in the week (preferably on Mondays) and by air (UPS Blue or air parcel post) so that samples are received in the laboratory before the weekend All samples must be well identified, and should be accompanied by appropriate data forms. A duplicate copy of the data form is mailed separately to the central laboratory to help trace a shipment.

The laboratory, upon receipt of the shipment, will replace the used sample buckets or containers with clean ones by return mail or other delivery mode.

2.7.2 *Procedure*

Label each sample with station identification, date of sampling period, and sample weight (Section 2.5.3.1).

2.7.2.1 Weekly Cumulative Samples—

1. Be sure the sample is sealed, identified, and accompanied by its data form
2. Pack the cumulative weekly sample collection bucket into a cardboard carton or other protective box.
3. Seal the carton, and ship it to the central laboratory by the method and carrier prescribed for the program.
4. Mail a second copy of the data form separately to laboratory.

2.7.2.2 Daily, Event or Sequential Samples—Refrigerate event and sequential samples until they are shipped, and keep them cold during shipment.

1. Be sure the samples are sealed, identified, and accompanied by their data forms.
2. Pack the samples in cardboard-enclosed Styrofoam boxes (Polyfoam Packers Corp., Chicago, IL.) with gel freeze-packs. Keep the freeze-packs in the freezer compartment of the refrigerator for about 24 h before shipping to ensure that they are completely frozen. The gel packs are preferred because they are less likely to leak when unfrozen. Generally, four packs per box is sufficient to keep the samples cold for 4 or 5 days.
3. Seal the cartons, and ship by the prescribed method and carrier.
4. Mail second copies of data forms to the laboratory.

2.8 Documentation

All data, observations, and changes or modifications must be documented with dates on the proper data forms and/or in logbooks. The data forms should be made out in triplicate (carbon paper may be used) with one copy kept in the station records, one shipped with the sample, and the last mailed separately to the central laboratory on a weekly basis. The logbook entries are made out in duplicate. One copy is kept at the station and the other is mailed with the data forms and the rain chart to the central laboratory

2.8.1 *Logbook*

Use a bound logbook with perforated pages that can be torn out easily Record all problems and actions; dates and times of visits; equipment changes; procedural changes or modifications; standard solution changes; electrode replacement, operator changes, and so forth, in the logbook. Submit one copy to the central laboratory and keep the other at the station.

2.8.2 *Rain Gauge Charts*

Mark the rain gauge chart with station identification, dates and notations for tests, problems, and so forth, and submit weekly to the central laboratory.

2.8.3 *Field Data Forms*

The field data form must contain all of the following information. station, operator, date, sample weight, sampling times, field values of pH and conductivity, problems, and so forth

Start a new form when a clean bucket is installed in the sampler. (For daily, event or sequential sampling use a new form for each sample collected.) Complete the form when the sample is removed from the collector. An example of a data form used by NADP for event sampling is in Figure 2-2 The numbered items below refer to the numbers in Figure 2-2.

1. STATION NAME and ID supplied by the project coordinator.
2. OBSERVER'S signature and printed initials; person completing the form even if substituting for regular observer.
3. If both WET and DRY buckets to be analyzed, indicate sample type on the form at the beginning of the collection period; check the wet box for a WET sample even if no precipitation occurred.

4. Enter precise DATE ON and OFF (mo/day/yr) and the local TIME when sample buckets are installed and removed Specify 24-h time and indicate the TIME ZONE by circling the appropriate three-letter code.
5. Check appropriate boxes for the three SITE OPERATIONS (Section 2.4). Diagnose items 1 and 3 from the event pen trace on the rain chart. Add evidence for item 1—the lack or presence of moisture in the dry bucket and the reasonableness of agreement between the collector and rain gauge amounts in item 8 below. For operation 2, be sure the weight trace is complete for the sampling time period.
6. SAMPLE CONDITION is a qualitative observation of precipitation quality. Note any comment on obvious causes of the condition under item 11 REMARKS.
7. Complete the form for SAMPLE WEIGHT by entering weight of SAMPLE BUCKET with LID. Include total weight of sealed bucket, lid, and sample shipped, beneath SAMPLE WEIGHT designation. Start a new form for newly installed bucket by entering *BUCKET WEIGHT* of clean bucket (Section 2.5) with its lid. Lid used is weighed separately and added to BUCKET weight. Obtain the weight of precipitation in exposed bucket by subtracting BUCKET WEIGHT from BUCKET + SAMPLE WEIGHT, and entering it as SAMPLE WEIGHT.
8. The PRECIPITATION RECORD gives daily TYPE (if known) and the AMOUNT (in.). Circle proper type (R,S,M, or U) under each day. The M denotes a mixture of rain plus snow/sleet/hail. Obtain the daily AMOUNT from recording rain gauge, and record it in the squares. Trace (T) indicates precipitation of 0.25mm (0.01 in.) or less. If rain gauge, chart, or pen malfunctioned and if no amount can be observed, circle MM. For cumulative weekly samples, add all daily rain gauge amounts, and record TOTAL SAMPLING PERIOD PRECIPITATION (in.). Do not merely subtract initial reading for week from final reading because errors occur due to evaporation. Convert TOTAL SAMPLER PRECIPITATION amount collected from grams to inches by multiplying SAMPLE WEIGHT (Section 7) by 0.00058 in./g, and record in appropriate boxes.

CAL/NREL USE ONLY			
BULK		LD	
DA		ND	
QA		NN	
NS/Exclude		S	

1 Station Name ____ ID

2 Observer Initials ____ Signature

3 Sample Bucket Check One: Dry Side / Wet Side

4 Bucket On Date (Mo Day Yr) Time (0000 2400)

Bucket Off Date (Mo Day Yr) Time (0000 — 2400)

Circle Time Zone: EDT (-1), EST/CDT (0), CST/MDT (1), MST/PDT (2), PST (3), AKDT (4), AKST MST (5), American (6), Samoa

5 Site Operations Check Yes or No for each item for wet-side samples only if No, explain in remarks

YES	NO	
2	1	1 Collector appears to have operated properly and sampled all precipitation events during entire sampling period
2	1	2 Rain gauge appears to have operated properly during the week
2	1	3 Collector opened and closed at least once during the week

6 Sample Condition Complete for all samples containing precipitation

2	1	1 Bird Droppings
2	1	2 Cloudy or Discolored
2	1	3 Lots of Soot or Dirt

Describe all else in remarks

7 Sample Weight - Grams Only for Buckets with water ice or snow

Bucket & Sample & Lid
− Bucket & Lid
= Sample weight

8 Precipitation Record For wet-side samples only

R-Rain only, s-Snow only, m-Mixture, u-Unknown, z-zero, t Trace, mm-Missing

Bucket On To Bucket Off

Tues	Wed	Thur	Fri	Sat	Sun	Mon	Tues
R S M U	R S M U	R S M U	R S M U	R S M U	R S M U	R S M U	R S M U
Z T MM	Z T MM	Z T MM	Z T MM	Z T MM	Z T MM	Z T MM	Z T MM

Type: Circle one for each day of precipitation

Amount: In inches or circle one

Total sampling period precipitation from rain gauge ____ inches

Total precipitation from sampler = sample weight x 0.00058 inches/gram ____ inches

9 Sample Chemistry Only for wet-side buckets with precipitation

Mo Day

Aliquot removed

Conductance ____ µS/um

Distilled water

7 5 0 ÷ ____ = ____

standard certified standard measured correction factor

____ × ____ = ____

Correction Factor Sample Measured Sample Corrected

pH

pH 4 Observed

Sample

10 Supplies

Circle if needed

pH 4

pH 7

75 µS/cm

Field Forms

11 Remarks

For example. Contamination by operator, equipment malfunction, harvesting in area

Figure 2-2. Field data form.

9. Space is provided for ONE measurement of sample conductivity and pH. Only one is necessary, but if the quality of the measurement is suspect and if over 70 g of sample remain, repeat the measurement, and record only the final value. Mention only problems in the remarks section. (Instructions in Sections 2.6.2 and 2.6.3.) Enter DATE of determination as well as total weight of sample ALIQUOT REMOVED. Record CONDUCTANCE of DISTILLED (or DEIONIZED) WATER used for rinses and SAMPLE MEASURED conductance corrected to 25°C. If resistance bridge cannot be adjusted, insert measured value of 74 umho/cm standard in STANDARD MEASURED to calculate CORRECTION FACTOR; then calculate and record the SAMPLE CORRECTED value. For conductivity meters adjusted to 74 umho/cm value using KCl standard, the correction factor is unity. The sample aliquot used for the conductance measurement can also be used for pH measurement. Never return any aliquot to the bulk sample. Avoid contaminating bulk sample or aliquot. Measure pH of SAMPLE aliquot (Section 2.6.3). After the measurement is completed, recheck the pH 4 buffer value, and enter it in OBSERVED if it differs by less than ±0.03 from 4.00. If the difference is more than ±0.03, repeat calibration, and remeasure the pH of the sample aliquot and the pH 4 buffer.
10. Obtain SUPPLIES by circling the appropriate material. If pH 3, 6, or 8 is needed, write it in this section. To avoid running out, request new material when about one-fourth of original supply remains.
11. The REMARKS space is provided for the observer to record any unusual problems, weather, or other occurrences at the field site or in the laboratory. Unusual occurrences in site area may include contamination by the operator, moisture in the dry bucket, plowing, harvesting, burning, increased atmospheric pollution or dust, or power outage. *The importance of the information requested in the remarks section cannot be overemphasized. Careful observation of the sample and occurrences in the surrounding environment can aid greatly in evaluating the validity of the sample and in the interpretation of the data collected.* For mailing instructions see Section 2.7.

2.9 Quality Control

Quality control procedures are used when possible to help assure the collection of high quality data Complete documentation of all observations and measurements, the use of known test solutions for pH tests, and the recheck of the pH calibration after sample measurements are examples of quality controls. In addition, two quality control functions involve the testing of field operators by outside personnel and one function uses field personnel as middle men in testing the central laboratory. The first two functions use (1) unknown test samples made up by the quality assurance or central laboratory for pH and conductance measurements and (2) field audits by an experienced observer The third merely requires the field personnel to forward a sample received from quality assurance personnel to the central laboratory disguised as a regular precipitation sample.

2.9.1 *Unknown or Quality Assurance Test Samples for the Field*

To evaluate the quality of each station's pH and conductivity measurements as well as to detect problems with these measurements, test samples of rain-type composition should be received from the quality assurance laboratory on a regular (e.g., monthly) basis.

1. Measure these samples of pH and conductance as soon as possible after receipt. Use the same procedure as for precipitation samples (Sections 2.6.2 and 2.6.3).
2. Fill out items 1 and 2 of the data form; record the data and the results in item 9, SAMPLE CHEMISTRY, and identify the sample under item 11 REMARKS.
3. Return the results on a data form, and the remainder of the sample by air mail to the laboratory.

The central laboratory remeasures the sample to be sure it has not changed during shipment to and from the station. The results indicate problems in these measurements due to technique, equipment and/or standards. If a problem is found, it should be corrected as soon as possible.

2.9.2 *Field Audits*

To review the quality assurance system and to evaluate each station's performance firsthand, an audit should be conducted at least once annually by experienced personnel from the central laboratory. The audit should cover all aspects of site operation.

1. About 4 to 6 weeks before the audit, a questionnaire should be sent from the central laboratory to the field personnel. They fill in the questionnaire (Section 6.7.3, quality assurance handbook (1)) and return it prior to the auditor's visit so that the auditor can assess the operator's overall capabilities and prepare pertinent questions.
2. The auditor will add a test sample to a clean bucket at the station, and the operator will weigh the sample, measure its pH and conductivity, and record the data on a Data form.
3. The auditor will inspect all equipment, calibrate the rain gauge, offer advice, and ask questions while the operator goes through the rounds and tests
4. If there are any problems, the auditor attempts to correct them; and failing to do so, the auditor will bring them to the attention of the field manager.
5. The site personnel will be informed of the results at the end of the audit.

2.9.3 *Blind Samples for the Laboratory*

Blind (reference) samples will be sent to each station at various times for testing and forwarding to the central laboratory for analysis as part of the quality assurance program. The following are instructions and guidelines to be followed:

1. A reference sample will be shipped in a 500-ml polyethylene bottle with two preaddressed postcards, a mailing label, and a set of data.
2. Refrigerate the sample at 4°C until it can be submitted to the central laboratory during a week in which your site had no wet deposition.
3. If your precipitation samples are submitted in buckets, pour the contents of the bottle into a *clean* (not been used in the field) sample bucket when you are ready to submit the reference sample; weigh, and record as usual on a data form.
4. Remove your normal aliquot and measure pH and conductance; record these values as usual on the data form.
5. Fill out the rest of the regular field report form, and ship it with the sample to the central laboratory as a *normal precipitation sample.* Make up the information for PRECIPITATION RECORD, and so forth, on the data form.
6. Complete the information requested on the two postcards to identify the sample, and mail the cards.
7. Place a clean bucket in the collector, and proceed as usual.

2.10 Field Procedure Summary

To serve as an outline, an operating procedure summary is given below. It includes the basic steps, but it is not complete. The conductance and pH procedures are those applicable to most of the current instruments, but they may not pertain to a specific instrument being used. Check the manufacturer's instructions, and change the summary wording if necessary.

2.10.1 *Site Visits*

1. Daily: check rain gauge for event. If event occurred, record date and time, number of lid openings, and amount of precipitation from gauge. Note the weather. Weekly: change chart, fill pens, and wind clock. Monthly: check rain gauge calibration, and clean collector sensor.
2. Check dry buckets for moisture and other unusual occurrences. If not interested in dry bucket, wipe off rim.
3. If event occurred, replace wet bucket with new weighed one. Put new weighed lid firmly on sample bucket. Record observations on data form and in logbook.
4. Check collector, sensor, and rain gauge for problems.

2.10.2 *At Site Laboratory*

1. Sample handling - wipe outside of bucket dry; tap lid to knock off drops; remove, weigh bucket to calculate precipitation amount (to nearest 1.0 g). Record on sample data form. If sample is sent to laboratory in bottle rather than bucket, pour sample into sample bottle. Use smallest bottle that will accommodate sample. Discard sample over 16 oz. bottle quantity. Record total sample weight on bottle label. Rinse sample bucket with deionized or distilled water, shake, and drain. For sample in sealed bucket or bottle, allow at least 1 h for sample to reach room temperature.
2. Conductivity meter standardizing for adjustable meter - Use 74 umho/cm standard. For dip tube cell, rinse and shake test tube or vial three times with deionized or distilled water. Add 1.3 cm (0.5 in.) of 74 umho/cm solution; swirl to coat walls; drain. Add 20 ml of solution or enough to cover electrodes; insert rinsed conductivity cell. Remove and shake; repeat two times. Insert cell; set meter to conductivity, and control knob to read 74. Readjust after 1 min. Move cell up and down to remove bubbles, readjust to 74 if required. Discard solution; shake cell and tube dry. Put a second aliquot of 74 umho/cm solution in same tube; check reading. Readjust if necessary. Discard solution For closed bottom type cell, use above instructions omitting the test tube, and add sufficient water or solution to cover electrodes.

2.10.3 *Conductivity Test*

1. For dip tube cell, rinse and shake a new test tube or vial five times with deionized or distilled water. Rinse and shake conductivity cell three times.
2. Pour deionized or distilled water into test tube or vial. Dip and shake cell three times before reading. If conductivity exceeds 1 5 umho/cm, repeat rinses until below 1.5. Record latter of two readings in item 9 of field data form.
3. Drain and shake tube; shake cell dry
4. Rinse test tube or vial with sample. Pour sample into tube to cover electrodes. Reseal bulk sample container. Dip and shake cell three times, then measure conductivity and record.
5. Save this sample for pH test.
6. Rinse cell; shake, blot and store. For closed bottom type cell, use similar procedure, and add sufficient sample to cover electrodes.

2.10.4 *pH Meter Calibration*

1. Rinse electrode in deionized or distilled water and shake dry.
2. Put pH 7 buffer (or pH 6 if sample pH range 3 to 6 is more appropriate) in new tube; insert electrode, don't touch bottom. Wait 3 min., adjust standardize control to 7 (or 6). Remove electrode; let electrode drain and discard solution; repeat with new solution in same tube.
3. Put pH 4 buffer (or pH 3 if 3 to 6 range is used) in a new tube. Rinse and dry electrode; insert in tube, wait 3 min. Set slope control to 4 (or 3). Rinse and let electrode dry.
4. Rinse electrode, dry, and check pH 7 (or 6) buffer. If reading is off by more than ±0.02, repeat calibration.
5. Measure temperature of pH 7 (or 6) buffer solution, and rinse probe.

2.10.5 *pH Test*

1. Rinse electrode well and let it drain; insert in sample tube (from 2.10.3, step 5 above). Do not let electrode touch bottom of tube. Remove electrode; shake lightly to remove solution drops, then reinsert. Remove; shake lightly; and insert in tube.
2. Wait 3 to 5 min (do not stir sample) until pH is constant to ±0.02 for 1 min, then read and record pH.
3. Remove electrode; rinse and drain; reinsert it in pH 4 buffer for check. If reading is off by more than 0.03 unit, recalibrate and remeasure.
4. Remove electrode; rinse and store in test tube with 0.0001N acid solution (e.g., H_2SO_4), 74 umho/cm KCl or deionized water. Insert temperature probe in sample tube; wait 1 min; read and record temperature.
5. Remove temperature probe from sample and rinse. Discard solution.
6. Weigh sealed sample container after tests, and record weight on container and on data form.

2.10.6 *Storage and Shipping*

1. Store sealed, labeled sample containers in a refrigerator until they are packed for shipment.
2. Pack and ship to the central laboratory on scheduled day each week by approved carrier and method.

2.11 References

1. Galloway, J.N., and G.E. Likens, Water, Air and Soil Pollut. *6*, 241 (1976).
2. Galloway, J.N., and G.E. Likens, Tellus *30*, 71 (1978).
3. *Quality Assurance Handbook for Precipitation Measurement Systems*, U.S. Environmental Protection Agency, Research Triangle Park, NC, EPA-Draft.
4. Martin, C.W. NADP Winter Operation of Sampler, Hubbard Brook Experimental Forest, West Thornton, NH; letter to V.C. Bowersox, March 25, 1980.
5. *Methods for Chemical Analysis of Water and Wastes*, U.S. Environmental Protection Agency, Cincinnati, OH, EPA-600/4-79-020 (March 1979).
6. *Standard Methods for the Examination of Water and Wastewater*, American Public Health Association, Washington, D.C., 14th edition, (1975).
7. *Annual Book of ASTM Standards*, Part 31, Water, Standards D1125-64 and D1293-65, p. 120, 178 (1976).
8. Galloway, J.N., B.J. Cosby, and G.E. Likens, J. Limnol. Oceanogr. *24*, 1161 (1979).

3.0 Laboratory Support Operations for the Field

The laboratory must supply clean containers to the field sites, and it must prepare standards to be used to calibrate field instruments as well as quality control samples for use in the field. This section discusses the care of glass and plasticware, the preparation of reference solutions, and the evaluation of field equipment by the central laboratory. The referred data forms are in Section 3.6.

3.1 Cleaning and Supplying of Glassware and Plasticware

3.1.1 *Cleaning of New or Used Plasticware*

1. Rinse with deionized water 6 to 10 times. NOTE: If the plastic needs to be rubbed to remove a film, use a natural sponge.
2. Let stand, filled with deionized or distilled water for 48 h. Empty and dry in a 70°C oven.
3. After initial cleaning (steps 1 and 2), check a portion (~10%) of the containers to ensure that rinsing has been adequate. To do this, add 500 ml of deionized water to the cleaned container, seal the container with a cap or with Parafilm, and slowly rotate it so that the water touches all inner surfaces. DO NOT SHAKE. Check the conductivity of the water (Section 4.5); it should be less than 2.0 umho/cm. If any of the containers fail the check, rerinse all of the containers cleaned with the checked samples thoroughly and retest 5%.
4. After the plasticware is clean and dry, cap the containers and place them in a plastic bag to be sealed for shipment or storage.

3.1.2 *Cleaning of Glassware*

3.1.2.1 Glassware Used for Metal Analyses—

1. Rinse with deionized water twice and with 10% HNO_3 once.
2. Rinse 6 to 10 times with deionized water.

3.1.2.2 Glassware Used for Anions and NH_4^+—

1. Rinse with deionized water twice and with 10% KOH solution once.
2. Rinse 6 to 10 times with deionized water.
3. If water beads on the inner surface, the glassware needs to be cleaned more thoroughly. Wash with soap, and then wash using the routine 10% KOH cleaning procedure. If water still beads, soak the glassware overnight in 10% KOH, and rinse 6 to 10 times with deionized water.

3.1.3 *Supplying Containers to the Field*

After a sample shipment has been logged in at the central laboratory, replace the bucket or other sample containers with clean ones. The clean, sealed containers are shipped in plastic bags and reusable shipping cartons to the field sites on a routine basis (e.g., weekly) to maintain their supply. If cold packs and insulated containers are used, these are returned also. Check that the Styrofoam boxes are intact and not cracked, or replace with a new one. The shipment can be made by ground transport since each site should have a 3-week supply of these materials on hand.

3.2 Preparation and Measurement of Conductivity Standards for the Field

1. Weigh out 7.456 g of predried (2 h at 105°C) KCl and dissolve it in 1 liter of deionized water (0.10M KCl).
2. Dilute 50 ml of the 0.1M KCl to 10 liters with deionized water (0.0005M KCl)
3. Fill washed 0.5-liter bottles with the 0.0005M KCl solution to be sent to the field. Keep the solution refrigerated.
4. Measure the actual conductivity of the solution in each bottle (Section 4.5.2).
5. Fill out the Field Conductivity Standard form and label the bottle with the measured conductivity.
6. Send new standards to the field monthly. When old standards are returned to the laboratory, remeasure the conductivity. Complete the Field Conductivity Standard form.

3.3 Preparation and Measurement of pH Electrode Reference Solution for Field and Laboratory

1. Weigh out ~2.6 g $(NH_4)_2SO_4$ and ~2.8 g NH_4HSO_4, and dissolve in 2 liters of deionized water.
2. Prepare the pH electrode reference solution by diluting 5 ml of the stock solution (Section 3.3, step 1) to 1 liter with deionized water. Protect this solution from air, in a sealed container.
3. Alternately, a 10^{-4} to 10^{-5}N H_2SO_4 solution can be used for the electrode reference solution.
4. Fill 500-ml bottles with the pH electrode reference solution. Keep the solutions refrigerated.
5. Measure the pH and conductivity of the solution in each bottle (Sections 4.5.2 and 4.3).
6. Fill out the Field pH Electrode Test Solution form, and label the bottle with the measured pH and conductivity.
7. Remeasure the pH and conductivity of these solutions after they are returned from the field. Complete the Field pH Electrode Test Solution form.

3.4 Preparation of Quality Control Samples for the Field

1. Weigh out 0.70 g NH_4HSO_4, and dilute to 1 liter with deionized water.
2. Weigh out 0.70 g $(NH_4)_2SO_4$, and dilute to 1 liter with deionized water.
3. Monthly, prepare an audit sample by diluting approximately 10 ml of each of the two stock solutions (Section 3.4, Steps 1 and 2) to 1 liter with deionized water. Monthly, change the volume ratio of NH_4HSO_4 to $(NH_4)_2SO_4$, or add 10^{-3} to 10^{-6} N H_2SO_4, to vary the samples, pH and conductivity.
4. Alternately, 10^{-3} to 10^{-6}N acid solutions (e.g., H_2SO_4) can be used.
5. Fill 60-ml bottles with the mixed audit sample, and send each site one sample. Three bottles should be retained by the laboratory.
6. Immediately measure the three samples kept by the laboratory for pH (Section 4.3) and conductivity (Section 4.5). Check the laboratory electrode against another backup electrode for one sample. Fill out the appropriate section of the Field Quality Control Audit Sample Report. Refrigerate the laboratory samples.
7. When the field quality control audit samples from all sites have been returned to the laboratory, reanalyze the samples along with the laboratory's three aliquots. Check the laboratory electrode against another backup electrode for one

sample. Complete the Summary Field Quality Control Audit Sample Report

3.5 Evaluation of Field Equipment

All meters and electrodes should be tested before they are shipped to the field The meters usually have a serial number affixed, but the electrodes do not. An identification number should therefore be affixed to each electrode.

3.5.1 *Evaluation of Conductivity Meters and Cells*

3.5.1.1 Prepare a 0.0003M KCl Test Solution—Dilute 3 ml of the stock 0.10M KCl solution (Section 3.2.1) to 1 liter with deionized water.

3.5.1.2 Calibrate the Field Conductivity Meter—Calibrate as indicated by the manufacturer or as described in Section 4.5.

3.5.1.3 Fill 11 Vials or Plastic (17x100 mm) Tubes—Fill to a depth of 3 cm (or to cover the electrodes) with the 0.0003M KCl. The first tube is to be used as a rinse tube.

3.5.1.4 Measure the Conductivity of the 10 Solutions—Between each measurement, rinse the conductivity cell thoroughly with distilled water, carefully shake it dry, and dip it in the rinse solution three times.

3.5.1.5 Calculate an Average Value and the Standard Deviation—Use the following relationships.

$$\bar{x} = \Sigma \frac{x_i}{n} \qquad 3\text{-}1$$

and

$$s = [\Sigma(x_i - \bar{x})^2/(n-1)]^{1/2} \qquad 3\text{-}2$$

where

x_i = the measured value (in umho/cm or pH units),
$\bar{x}$ = the average value,
s = standard deviation, and
n = the number of values.

3.5.1.6 Record the Results—Record on the Conductivity Meter/Cell Acceptance Test form and the Conductivity Acceptance Test Summary form. The conductivity meter and cell are acceptable if the average value is within 2% of the theoretical value of 44.6 umho/cm (25°C) and if the standard deviation is less than 2%.

3.5.2 *Evaluation of pH Meters*

3.5.2.1 Calibrate the Field pH Meter—Calibrate as indicated by the manufacturer or as described in Section 4.3. A laboratory pH electrode of documented performance should be used.

3.5.2.2 Fill 11 Vials or Plastic (17x100mm) Tubes—Fill to a depth of 3 cm with the pH electrode reference solution (Section 3.3). The first tube is to be used as a rinse tube.

3.5.2.3 Measure the pH of the 10 Solutions—Between each measurement, rinse the pH electrode thoroughly with deionized or distilled water, carefully drain or shake it dry, and dip it in the rinse solution three times.

3.5.2.4 Calculate an Average Value and the Standard Deviation—see Section 3.5.1.5.

3.5.2.5 Record the Results—Record on the pH Meter/Electrode Acceptance Test form and the pH Acceptance Test Summary form. The pH meter is acceptable if the average pH and the standard deviation are within 0.03 unit of the documented values for the electrode used.

3.5.3 *Evaluation of pH Electrodes*

3.5.3.1 Assign Each New pH Electrode an Identification Number—Allow it to equilibrate overnight in the storage solution recommended by the manufacturer.

3.5.3.2 Rinse the Electrode Carefully with Deionized Water—Prior to testing, and then place it successively in deionized water in different test tubes until a constant pH reading is achieved.

3.5.3.3 Calibrate the Laboratory pH Meter—Calibrate as indicated by the manufacturer or as described in Section 4.2.

3.5.3.4 Measure the pH of 10 Tubes—Measure pH reference solutions as described in Sections 3.5.2.2 and 3.5.2.3.

3.5.3.5 Calculate an Average Value and the Standard Deviation— (Section 3.5.1.5).

3.5.3.6 Record the Results—Record on the pH Meter/Electrode Acceptance Test form and the pH Acceptance Test Summary form. The pH electrode is acceptable if the average pH is within 0.1 pH unit of the average historical value and if the standard deviation is less than 0.03 pH unit.

3.5.4 *Evaluation of Field Balance and Thermometers*

Reference weights traceable to NBS are necessary for daily balance calibration. Each laboratory should purchase a set of NBS-certified weights to be used to certify a set of working weights used daily in the field and laboratory. The procedure used to certify weights is as follows:

1. zero the balance according to manufacturer's recommendations,
2. weigh the working certified 1.0 and 5.0 Kg weights,
3. weigh reference 1 0 and 5 0 Kg weights,
4. repeat this procedure five times, and
5. complete the Certification of Working Weights to NBS form.

Working reference weights should be certified by this procedure once every 6 mo; then the reference weights are used for daily balance calibration, and the NBS-certified weights are kept as primary standards.

Each laboratory should have an NBS-calibrated thermometer. One thermometer in the laboratory should be certified against the NBS-calibrated standard. Keep the NBS-calibrated thermometer as a primary standard. Assign all laboratory and field thermometers (or temperature probes) identification numbers, and then calibrate them against the (secondary) certified thermometer. Calibrate the temperature probes in a circulating water bath in the 0° to 25°C range against the certified thermometer, and complete the Thermometer Calibration Log form. File one copy in the laboratory, and send another to the field with the temperature probe. If the water bath does not have a cooling coil, an ice-water mixture can be used to achieve the low-temperature reading. Generally, calibration at two temperatures, near 0° and 25°C, is sufficient and linear temperature behavior may be assumed.

3.6 Report Forms

Blank data forms are included in this section for the convenience of the manual user. Uses of these are discussed throughout Section 3. To relate the forms to the test being documented, a number is given in the lower righthand corner of each form (e.g., 1.1/3.4 indicates form 1, version 1, as discussed in Section 3.4). The forms included are listed below:

Form	*Title*
1.1/3.2	Field Conductivity Standard Form
2.1/3.3	Field pH Electrode Test Solution
3.1/3.4	Field Quality Control Audit
4.1/3.5.1	Conductivity Meter/Cell Acceptance Test Form
5.1/3.5.1	Conductivity Acceptance Test Summary Form
6.1/3.5.2	pH Meter/Electrode Acceptance Test Form
7.1/3.5.2	pH Acceptance Test Summary Form
8.1/3.5.4	Certification of Working Weights to NBS Form

Field Conductivity Standard Form

Date of Preparation of
0.1M KCl Stock Solution. _____

Date of Preparation of
Dilute Field Standard: _____

_____
(Analyst Signature)

Laboratory Analysis Before Shipment to the Field

1. _____

2 _____

3. _____

Average Cond.
= Std. Dev. _____

Laboratory Values After Use In The Field:

Field Site =	*Date of Lab Analysis*	*Lab Value (umhos/cm)*

Field pH Electrode Test Solution

Date of Preparation of
Stock Solution _____

_____
(Analyst Signature)

Volume of Stock Taken _____

Final Dilution Volume of
Field pH Electrode Test Solution _____

Laboratory Analysis Before Shipment to the Field

	Conductivity	*pH*
1.	_____	_____
2.	_____	_____
3	_____	_____

Ave. ± Std. Dev _____

Laboratory Analysis of Aliquots Returned from the Field

	Field pH Values	*Lab Values After Return*			
Site #	*Ave. ± Std. Dev. (date)*	*Date of Analysis*	*pH*	*Cond.*	*Anal. Init.*

Field Quality Control Audit Sample Report

Sample # _____

Date of Preparation of Field Audit Sample: _____

Vol. of $(NH_4)_2SO_4$ Stock: _____ *ml;* *Date of Stock Preparation.* _____

Vol. of NH_4HSO_4 Stock; _____ *ml;* *Date of Stock Preparation.* _____

Final Dilution Volume of Field Audit Samples: _____ *ml;*

_____
(Analyst Signature)

Laboratory Analysis Before Shipment[a] To the Field		*Laboratory Analysis After Return[a] From the Field*	
Conductivity	*pH*	*Conductivity*	*pH*
1 _____	_____	1. _____	_____
2. _____	_____	2 _____	_____
3. _____	_____	3. _____	_____
Average ± Std. Dev.		*Average ± Std. Dev*	
_____	_____	_____	_____

Laboratory Analysis of Aliquots Returned From the Field

Site #	*Date Of Lab Analysis*	*Conductivity Value*	*pH Value*	*Analyst Initials*
_____	_____	_____	_____	_____
_____	_____	_____	_____	_____
_____	_____	_____	_____	_____
_____	_____	_____	_____	_____
_____	_____	_____	_____	_____
_____	_____	_____	_____	_____

[a] *These data are for three laboratory aliquots which are analyzed before shipment of samples, are then refrigerated, and are reanalyzed with the samples returned from the field.*

Conductivity Meter/Cell Acceptance Test Form

Date of Test: _____

_____
(Analyst Signature)

Preparation Date of
A 0 0003 M KCl Reference Solution: _____

Meter Type/Serial No. _____/_____

Conductivity Cell Type/Serial No _____/_____

Indicate Whether Test of _____ *Meter or* _____ *Cell*

Conductivity Values Obtained:

Aliquot 1.	_____	*Aliquot 6:*	_____
Aliquot 2.	_____	*Aliquot 7.*	_____
Aliquot 3:	_____	*Aliquot 8:*	_____
Aliquot 4.	_____	*Aliquot 9.*	_____
Aliquot 5.	_____	*Aliquot 10:*	_____

Test Solution _____

Average conductivity
± standard deviation: _____ ± _____

Accepted _____ *Rejected* _____

Conductivity Acceptance Test Summary Form

Meter Type/ Serial #	*Cell Type/Serial #*	*Date of Ref Soln. Prep*	*Date of Check*	*Conductivity Value Average ± Standard Deviation (umho/cm)*	*Number of Values*	*Analyst Initials*

PH Meter/Electrode Acceptance Test Form

Date of Test. _____

_____
(Analyst Signature)

Preparation Date of
pH Electrode Reference Solution: _____

Meter Type/Serial No _____/_____

pH Electrode Type/Serial No. _____/_____

Indicate whether test of _____ *meter or* _____ *electrode*

pH Values Obtained.

4 0 (3.0) Buffer before:	_____	*Aliquot 6·*	_____
7.0 (6.0) Buffer before:	_____	*Aliquot 7:*	_____
Aliquot 1·	_____	*Aliquot 8*	_____
Aliquot 2	_____	*Aliquot 9:*	_____
Aliquot 3.	_____	*Aliquot 10*	_____
Aliquot 4	_____	*4 0 (3 0) Buffer after:*	_____
Aliquot 5:	_____	*7 0 (6.0) Buffer after*	_____

pH Electrode Reference Solution:

Average pH ± *standard deviation:* _____±_____

Accepted _____ *Rejected* _____

pH Acceptance Test Summary Form

Meter Type/ Serial #	*Electrode Type/ Serial #*	*Date of Ref Soln. Prep.*	*Date of Check*	*pH Value Average ± Standard Deviation*	*Number of Values*	*Analyst Initials*

Certification of Working Weights to NBS Form

Date of Certification. _____

Weight Set Serial #: _____

_____
(Analyst Signature)

Balance 0	_____	*Balance 0*	_____
NBS 1kg	_____	*NBS 1kg*	_____
NBS 5kg	_____	*NBS 5kg*	_____
Test 1kg	_____	*Test 1kg*	_____
Test 5kg	_____	*Test 5kg*	_____
Balance 0	_____	*Balance 0*	_____
NBS 1kg	_____	*NBS 1kg*	_____
NBS 5kg	_____	*NBS 5kg*	_____
Test 1kg	_____	*Test 1kg*	_____
Test 5kg	_____	*Test 5kg*	_____
Balance 0	_____	*Balance 0*	_____
NBS 1kg	_____	*NBS 1kg*	_____
NBS 5kg	_____	*NBS 5kg*	_____
Test 1kg	_____	*Test 1kg*	_____
Test 5kg	_____	*Test 5kg*	_____

Summary:

	Average ± Standard Deviation
Balance 0	_____
NBS 1kg	_____
NBS 5kg	_____
Test 1kg	_____
Test 5kg	_____

4.0 Laboratory Procedures

The laboratory procedures herein are for chemical measurements and analyses of precipitation samples. All forms referred to are in Section 4.10.

4.1 Gravimetric Measurements

In both the field and the laboratory the volume of rainwater is determined by measuring the mass of the rain and multiplying the mass by 1 g/cm^3 to obtain the volume. The mass of rain is measured in the field to determine the rain collector efficiency (compared to that of the rain gauge), and the mass of the sample sent to the laboratory is measured as a check to determine if leakage occurred in shipment. The sample should be sent to the central laboratory in plastic buckets or plastic bottles; in either, the sample is reweighed in the laboratory.

4.1.1 *Apparatus*

The balance should have a capacity of 20 kg and a precision of at least ±10 g.

4.1.2 *Calibration*

Calibrate the balance monthly, using weights traceable to NBS-certified weights. Store the NBS-certified weights (primary references) in the laboratory, certify the working calibration weights against these, and complete the Certification of Working Weights to NBS form. Recertify all working calibration weights against the NBS-certified weights every 6 mo. The procedure for weight certification is the same as for field balances (Section 3.5.4). Calibrate each balance using weights close to those actually measured. Calibrate high-capacity balances, using 1.0 and 5.0 kg weights.

4.1.3 *Procedure*

To obtain the weight of the sample received in the laboratory, use the following procedure. During the procedure, avoid breathing on the sample to avoid NH_3 contamination.

1. Be sure that the balance is level, and then adjust its zero knob so that the balance zeroes (see manufacturer's instructions).
2. If a bucket containing a sample is being weighed, tap the lid to knock off any water drops from its inside surface into the bucket, and then remove the tape and lid from the bucket.
3. Place the bucket without its lid or the plastic bottle on the balance pan, and weigh it to the nearest gram.
4. Record the weight on the bucket or bottle label on the Field Data form.
5. Subtract the initial weight of the empty container (recorded on the Field Data form) from the final weight of container plus the sample to obtain the sample weight shipped.

4.2 pH Measurement (2,3)

4.2.1 *Scope and Application*

This procedure is applicable to rainwater and to drinking, surface, and saline waters. The pH of a sample is determined electrometrically, using a glass electrode in combination with a reference electrode. The glass and reference electrodes may be separate or combined in one unit. The measurement should be performed on site immediately after sample collection. Upon arrival in the laboratory, the sample should be measured for pH to check the field measurement and to indicate if the sample degraded. The pH of rainwater is usually in the 6 to 4 pH range.

Temperature effects on electrometric pH measurements can be caused by two changes. The first is the change in electrode output at various temperatures; this interference can be controlled by using instruments that have temperature compensation or by calibrating the electrode instrument system at the sample temperature. The second is the change of pH inherent in the sample at various temperatures; this error is sample dependent, and cannot be controlled so it should be noted by reporting both the pH and the temperature at the time of analysis.

4.2.2 *Apparatus*

A wide variety of pH meters are commercially available with different specifications and optional equipment. A meter should have both an intercept and a slope adjustment and should be capable of measuring to ±0.01 pH unit. Older pH meters used to be calibrated by using a single buffer to electronically set the intercept; this single point calibration assumed that the correct theoretical slope was achieved by the electrode, but this is a poor assumption because commercial electrodes have slopes which vary from 95% to 102% of the theoretical slope(4). Modern pH meters allow calibration at two points: one to establish the intercept and the other to establish the slope. When the pH meter is not in use, leave it in the standby mode. Always allow the meter to warm up at least 30 min. before making measurements if it has been disconnected.

A glass electrode and a reference electrode must be used with the pH meter. The reference electrode can be a calomel, silver-silver chloride or other reference electrode of constant potential. Combination electrodes with both measuring and reference functions can be used. All electrodes should be checked for acceptable performance (Section 3.5.3). Store the pH electrodes in deionized water, 74 umho/cm KCl standard or 10^{-4}N acid (H_2SO_4) solution. Prior to use, rinse the pH electrode thoroughly with deionized water.

A thermometer or a temperature sensor must be used to measure the sample and buffer solution temperature.

4.2.3 *Reagents*

Use primary standard buffer salts, available from the Natural Bureau of Standards (NBS), when extreme accuracy is necessary. Prepare reference solutions from these salts, using special precautions and handling (5) —that is, low-conductivity dilution water, drying ovens, and CO_2-free gas for purging. Replace these solutions at least once each month.

Prepare secondary standard buffers from NBS salts or use pH buffers purchased from commercial vendors. Use of commercially available solutions already validated by comparisons with NBS standards is recommended for routine use.

4.2.4 *Calibration*

Because of the variety of pH meters and accessories, detailed operating procedures cannot be incorporated into this manual; thus each analyst must thoroughly understand the operation of his instrument and all functions.

Calibrate each instrument/electrode system at a minimum of two points that bracket the expected pH of the samples and that are 3 or more pH units apart. Most rainwater samples have pH's in the range of 3.0 to 6.0 or 4.0 to 7.0, depending on the area sampled; therefore, either pH 3.0 and 6.0 or pH 4.0 and 7.0 buffer solutions are suggested. Calibrate the pH meter before and after each set of (at most 20) samples.

Before calibration, top off the electrode, if it is not sealed, with filling solu-

tion (available from the manufacturer), and then rinse it carefully with deionized water. Measure both the standard buffers and the samples at the same temperature.

Various pH meters have a "balance" or "standardize" dial and a slope or temperature adjustment (outlined in the manufacturer's instructions) Use the pH 6.0 or 7.0 buffer to set the intercept of the pH response with the standardization knob, and then use the 3.0 to 4.0 buffer to adjust the slope control of the pH response or the temperature function control. Then recheck the measured pH of the other buffer until both calibration standards are within ±0.02 unit of the buffer value.

After each calibration, rinse the electrode thoroughly with deionized water, and then measure the pH of the deionized water in several test tubes until a stable value is obtained. This procedure minimizes the chances of buffer contamination of any sample.

4.2.5 *Procedure*

1. Calibrate the meter and the electrode system (Section 4.2.4).
2. Place a sufficient volume of the sample in a clean vessel to cover the sensing elements of the electrodes.
3. If the sample and the buffer solution temperatures differ by more than 2°C, correct the measured pH values. Some pH meters have automatic or manual compensators that electronically adjust for differences (refer to manufacturer's instructions).
4. Rinse and gently shake drops off the electrodes, immerse them in the sample vessel and swirl the sample gently for a few seconds after immersion to ensure even contact between the sample and the electrode sensing elements.
5. Allow the electrodes to equilibrate. Do not disturb the air-water interface or the solution while the measurement is being made. (If the sample is not in equilibrium with the atmosphere, pH values can change as the dissolved gases are either absorbed or desorbed.) Record the pH and temperature of the sample.

4.2.6 *Calculations*

Read the pH meters directly in pH units, and record on the data form pH to the nearest 0.01 unit, and the temperature to the nearest degree (°C).

4.2.7 *Quality Control*

Immediately after setup, measure the pH of the electrode reference solution (Section 3.3). Plot and evaluate the measured pH on the real-time plots (QA manual, Section 7.6.5.1) (6).

Check the calibration (Section 4.2.4) after 20 samples; if the calibration has drifted more than ±0.02, stop the analysis, readjust and check the meter and the electrodes.

Forty-four analysts in 20 laboratories analyzed 6 synthetic water samples containing exact increments of H^+ and OH^- ions with the following results for precision and accuracy.

In a single laboratory (EMSL Cincinnati, OH) using surface water samples with an average pH of 7.7, the standard deviation was ±0 1.

4.3 Conductance Measurement

4.3.1 *Conductance Using One Standard (2)*

4.3.1.1 Scope and Application—This procedure is applicable to rainwater, drinking, surface, and saline waters, and to domestic and industrial wastes. The specific conductance of a sample is measured by a self-contained conductivity meter, Wheatstone bridge type, or equivalent. Samples are analyzed preferably at 25°C; if not, temperature corrections are made, and results reported at 25°C The instrument must be standardized with KCl solution before daily use; the conductivity cell must be kept clean; and temperature variations and corrections represent a large source of potential error.

Analyses can be performed either in the field or the laboratory. If the analysis is not completed within 24 h of sample collection, filter the sample through a 0.45-u filter and store it at 4°C. Wash the filter and apparatus with high quality deionized water, and prerinse with sample before use.

4.3.1.2 Apparatus—The following are needed for this procedure:

1. Conductivity bridge, range 1 to 1000 umho/cm.
2. Conductivity cell, cell constant 1.0 or dipping-type microcell with 1.0 constant, YSI #3403 or equivalent.
3. Thermometer.

pH Units	Precision as Standard Deviation pH Units	%	Accuracy as Bias pH Units
3.5	0.10	-0.29	-0.01
3.5	0.11	-0.00	
7.1	0.20	+1.01	+0.07
7.2	0.18	-0.03	-0.002
8.0	0.13	-0.12	0.01
8.0	0.12	+0.16	+0.01

(FWPCA Method Study 1, Mineral and Physical Analyses.)

4.3.1.3 Reagents—

1. Stock solution, 0.10M KCl: Dissolve 7.456 g of predried (2 h at 105°C) KCl in deionized water, and dilute to 1 liter at 25°C.
2. Standard solution 0 0005M KCl: Dilute 5 ml of the 0.10M KCl to 1000 ml with deionized water.
3. Spike solution, 0.0005M KCl Prepare as in Step 2, but use an independently prepared stock KCl solution.

4.3.1.4 Calibrations—The analyst should use the standard KCl solution and the table below to check the accuracy of the cell constant.

4.3.1.5 Procedure—Follow the manufacturer's directions for operation of the instrument.

1 Allow samples to come to room temperature (23° to 27°C) if possible.
2. Measure the temperature of samples. If the temperature is not 25°C, correct the reading to 25°C (Section 4.3.1.6).

4.3.1 6 Calculations—Most of the instruments are equipped to give the conductivity of a solution as a direct readout.

These temperature corrections are based on standard KCl solution, and are used with instruments having no automatic temperature compensation

1. Add 2% of the reading per degree below 25°C or

Conductivity of 0.0005M KCl

°C	umhos/cm
20	66.8
21	68.2
22	69.5
23	71.0
24	72.4
25	73.9
26	75.4
27	76.9
28	78.4

2. Subtract 2% of the reading per degree above 25°C.
3. Report specific conductance, in umho/cm at 25°C.

4.3.1.7 Quality Control—Measure analyst spikes daily. Plot and evaluate the values on real-time plots (QA manual, Section 7.6.5.1). Forty-one analysts in 17 laboratories analyzed six synthetic water samples containing increments of inorganic salts, with the following results for precision and accuracy.

In a single laboratory (EMSL, Cincinnati, OH) using surface water samples with

an average conductivity of 536 umhos/cm at 25°C, the standard deviation was found to be ±6.

4.3.2 *Conductance Using Multiple Standards (Alternate Procedure)*

4.3.2.1 Scope and Application—This procedure is applicable to rainwater and to drinking and surface waters. The conductivities of calibration standards and samples are measured by a self-contained conductivity meter, Wheatstone bridge type or equivalent. The specific conductivities of the samples are obtained by comparing the measured values with a plot of the measured conductivities versus the specific conductances of the standards. The instrument must be standardized with KCl solutions before daily use and the conductivity cell must be kept clean. Temperature variations and corrections represent a large source of potential error; therefore, the calibration standards and the samples should be measured at the same temperature to minimize error For sample handling and preservation, refer to Section 4.3.1.1, and for apparatus refer to Section 4.3.1.2.

Specific Conductance, umho/cm	*Standard Deviation in umho/cm*	*Accuracy as Bias, %*	*umhos/cm*
100	*7 55*	*-2 02*	*-2 0*
106	*8 14*	*-0 76*	*-0 8*
808	*66 1*	*-3 63*	*-29 3*
848	*79 6*	*-4 54*	*-38 5*
1640	*106*	*-5 36*	*-87 9*
1710	*119*	*-5 08*	*86 9*

(FWPCA Method Study 1, Mineral and Physical Analyses)

4.3.2.2 Reagents—

1. Stock solution, 0.10M KCl—Dissolve 0.7456 g of predried (2 h at 105°C) KCl in deionized water, and dilute to 100 ml at 25°C with deionized water.
2. Stock solution, 0.01M KCl—Dilute 10 ml of 0.10M KCl stock to 100 ml with deionized water.
3. Spike solution, 0.0005M KCl—Dilute 5 ml of a stock KCl solution (0.10M) prepared independently from the stock used for the calibration standards to 1 liter with deionized water.

4.3.2.3 Calibration—Laboratory calibration for conductivity measurements is multipoint. Prepare stock 0.1M and 0.01M KCl solutions as needed. Each day of analysis, prepare a deionized water blank and 0.0001M, 0.0005M, and 0.001M KCl solutions from the 0.01M stock by serial dilution with deionized water.

Calibrate the conductivity meter using KCl solutions of known conductivity (Table 4-1).

Table 4-1. *Specific Conductances of KCl Solutions*

Concentration, M	*Specific Conductance umho/cm @ 25°C*
0 0001	*14 94*
0 0005	*73 90*
0.001	*147 00*

Directly before and after analysis, analyze the calibration standards along with the deionized water used to dilute the standards. Subtract the response of the deionized water from the response of the calibration standards analyzed at the same time. Calculate a linear least squares fit of the specific conductances vs. the measured conductivities, or plot a graph of the same parameters for all calibration points measured before and after the samples.

4.3.2.4 Procedure—Follow the manufacturer's directions for the operation of the instrument.

1. Allow samples and standards to come to room temperature if possible; all must be at the same temperature.
2. Read the measured conductivities for all standards and samples; thoroughly rinse the cell with deionized water between samples and shake off the excess water.

4.3.2.5 Calculations—Calculate conductivities using a graph or using a linear least squares fit.

1. Graph - Read the sample conductivity directly from the plot of specific conductance vs. measured conductivity.
2. Linear least squares fit - Use equations available in most elementary statistics books(9) to obtain a linear least squares fit. The calculation yields the following parameters. slope (m), intercept (b), error of fit (e), and correlation coefficient (r). For standard i, the slope and intercept define a relationship between the specific conductance (x_i) of the standards and the instrument response (y_i)

$$Y_i = mx_i + b. \qquad 4\text{-}1$$

Equation 4-1 is the preferred fit where major components of random variance are assumed to be in instrument response. Rearrangement of the equation yields the specific conductance (x_j) corresponding to an instrumental response (Y_j) of a sample j,

$$x_j = (Y_j - b)/m. \qquad 4\text{-}2$$

4.3.2.6 Quality Control—Measure analyst spikes daily. Plot and evaluate the value obtained on the real-time plots described in the QA Manual, Section 7.6 5 1(6). No precision or accuracy data are available

4.4 Sample Filtration

After measuring the pH and conductivity, but before measuring the other analytes, filter the rainwater sample. Use vacuum or pressure filtration to minimize exposure of the sample to laboratory air. The vacuum apparatus can be a bell jar (ground-glass plate) of sufficient size to contain a 250-ml (8-oz) bottle, or it can be the apparatus recommended in a recent study(1). The recommended filter material is a 0.45-um membrane filter (Millipore HA); the filter funnel should be plastic. Before each filtration, thoroughly rinse the apparatus, including the filter, with deionized water and a portion of sample if there is a sufficient amount Filter the sample as quickly as possible, and cap the labeled sample bottle containing the filtrate to minimize contact with laboratory air If the filtered particulates are to be analyzed, they should be washed with deionized water, placed in a labeled petri dish, allowed to dry in a desiccator, and stored until they are extracted.

4.5 Acidity Measurements

Acid precipitation analyses should distinguish between acidity due to strong and to weak acids. Strong acid is measured by the Gran titration (7,8); total acidity is measured by titrating to pH 8.3 to include other acids (except NH_4^+); and weak acid is calculated by subtracting the strong acid value from the total acid value.

4.5.1 *Strong Acid*

4.5.1.1 Scope and Application—The Gran titration is applicable to rainwater, surface, and other waters and gives a measure of the concentration of strong acid. The detection limit of this method depends on the volume of sample titrated. (When a 3 ml sample is titrated with 0.01N NaOH, the detection limit is 0.005 μg/ml.)

The Gran titration is based on the Nernstian response of the pH electrode. For the Gran plot (7,8), a function of the potential ψ gives a linear relationship with the volume of base added over a range of pH's below about 5.5.

$$V = V_e - K\psi \qquad 4\text{-}3$$

where V = total volume of based added,
V_e = equivalance point volume of base, and
K = experimentally determined Gran plot slope.

$$K = 1/C_B 10^{E_o/S} \quad 4\text{-}4$$

where C_b = concentration of base,
E_o = standard potential, and
S = electrode slope.

The K value is determined, not calculated, and the ψ function is given by Equation 4-5.

$$\psi = (V_o + V)\, 10^{E/S} \quad 4\text{-}5$$

where V_o = initial volume of solution in titration vessel,
E = potential measured after volume V of base added, and
S = electrode slope defined by Equation 4-6.

$$S = 2.303RT/F = 0.1984T\,(^\circ K)\text{mv} = 59.16 \text{ mv at } 25^\circ C \quad 4\text{-}6$$

where R = gas constant,
T = absolute temperature (°C + 273°), and
F = Faraday constant.

Experimentally, one titrates and calculates the ψ function for each V and E value; calculates the linear least squares fit of V and ψ for the initial values of the titration; obtains the intercept V_e; and calculates the amount of strong acid in the titration vessel by multiplying V_e by the concentration of the base added.

4.5.1.2 Apparatus—The following are needed for the Gran titration.

1. pH meter which measures to ±0.1 mv.
2. Microelectrode which passes the electrode test (Section 3.5.3).
3. Thermostatted ~15-ml titration vessel.
4. Small magnetic stirring bar and variable speed magnetic stirrer.
5. Micropipette capable of reproducibly delivering 5 ul of solution.
6. A thermometer good to ±0.1°C, and a titration vessel constructed so that the thermometer can be submerged in each sample.
7. A source of N_2 gas to purge CO_2 from the airspace above the sample.

4.5.1.3 Reagents—

1. *Deionized Water* - Prepare all reagent dilutions with CO_2-free water.
2. *Conditioning Solution* - Prepare 5.0×10^{-5}N H_2SO_4 fresh daily from 0.1N H_2SO_4. Dilute 10-ml of 0.1N H_2SO_4 (a commercial DILUT-IT) to 100 ml with deionized water, and dilute 10 ml of the resulting solution to 2000 ml with deionized water.
3. *Titrant* - Prepare 0.01N NaOH daily from 1.0N NaOH. Dilute 10 ml of 1.0N NaOH (a commercial DILUT-IT) to 1 liter with deionized water (0.01N NaOH). Standardize the 1.0N NaOH once a month against potassium acid phthalate
4. *Spike Solution* - Prepare 1.0×10^{-5}N and 3.0×10^{-5}N H_2SO_4 solutions as "analyst spikes" daily from a separate 0.1N stock solution.

4.5.1.4 Calibrations—Calibrate the micropipette once a week and each time a new glass tip is placed on the micropipette. Calibrate the micropipette gravimetrically or with the procedure presented below.

Add about 2.5 ml of deionized water in five 5-ml volumetric flasks. Use the micropipette to deliver 5 ul of a 1000 ug/ml or 1 ug/ul Cu atomic absorption standard to each flask. Dilute to volume and analyze for Cu using flame atomic absorption spectrophotometry. Calculate the micrograms per milliliter found from the calibration standards made by serial dilution of the 1000 ug/ml Cu using Class A volumetric pipettes. (The background matrix for the calibration standards should be the same as for the calibration samples plus deionized water.) Calculate the micropipette calibration:

Micrograms Cu delivered = micrograms per milliliter found x 5.0 ml.

Since the spiking solution has a concentration of 1 ug/ul, the number of micrograms is equal to the number of microliters. Obtain an average value and standard deviation of microliters delivered; the standard deviation should be less than 2%.

4.5.1.5 Procedure—

1. *Condition the Titration Cell* - Pipette 7.0 ml of 5×10^{-5}N H_2SO_4 into the titration cell; allow time for thermal equilibration at 25°C; measure the potential of the solution; discard the solution; rinse the cell with conditioning solution; and pipette another 7.0-ml aliquot of conditioning solution into it. Repeat this procedure until the potential is within 1 mv of the previous measurement to condition the titration cell for microdetermination of strong acid.
2. *Measure Acid in the Conditioning Solution* - Pipette 7.0 ml of 5×10^{-5}N H_2SO_4 into the conditioned titration cell; start the stirrer; add 3 ml of deionized water; allow time for thermal equilibrium (25°C); titrate the conditioning solution by adding 5-ul increments of 0.01N NaOH with a calibrated micropipette; and record, after each addition, the resulting potential. Continue the titration until the change in the potential from that originally measured is 15 to 20 mv. Data points taken for the Gran plot are the initial potential and all points up to the 20-mv change; there should be at least five points.
3. *Measure Strong Acid in Samples* - Rinse the cell with conditioning solution; pipette 7.0 ml of conditioning solution into the conditioned titration cell; monitor the initial millivolt reading, and if it is not within ±1.2 mv of the original conditioning solution readings, rerinse the cell and repeat until the voltage is, then pipette 3.0 ml of sample into the conditioning solution, and titrate as indicated in step 2 above.

4.5.1.6 Calculations—Calculation of the concentration of strong acid depends on the linear relationship between the volume of base added and the Gran function ψ (Equation 4-3). A sample data form and calculations are in Figure 4-1. The data form gives the potential readings as a function of the volume of base added. The ψ function is calculated for the potential at each titration point using Equation 4-5. To determine the equivalence point volume of base (V_e), a linear least squares fit of the volume of base added (V) versus function ψ is calculated. The intercept is the equivalence point volume of base. The ψ function can be plotted versus the volume of base added (V), and the intercept found graphically (Figure 4-2). Blank data forms are in Section 4.10. To obtain the acid content of the sample, subtract the value of the conditioning acid solution equivalents from those obtained from the sample titration.

4.5.1.7 Quality Control—Daily after setup, analyze three conditioning solutions and one spike (Section 4.5.1.5).

1. Plot the magnitude of V for each conditioning solution; determine the percent recovery for the spike and add it to the real-time plots described in the QA Manual (Section 7.6.5.1).
2. If calculations are performed mathematically, evaluate the correlation coefficients; if less than 0.9990, troubleshooting should be performed and the conditioning solution and/or sample reanalyzed.
3. Monitor the initial conditioning solution potential for each sample; if not within ±1.2 mv of the potential for the conditioning solution at the beginning of the run, empty and refill the titration vessel with conditioning solution.

Sample # Initial mv Temp. °C	µl NaOH Injected	mv reading		Sample # Initial mv Temp °C	µl NaOH Injected	mv reading	Date.
CS #3	0	146.6					Conc NaOH _____ N
155.8 mv	5	142 8					Micropipette Calibration
22 0°	10	138.4					5 µl = _____ µl
	15	133.2					
	20	126 6					
	35	79.1					Total volume _____
	50	-106.8					
	65	-133.4					
	80	-146 0					

Calculations

$S = 0.1984\ (T) = 0.1984\ mv(273.15°C + 22.0°C) = 58.56\ mv$

Strong Acid

V (µl injected)	V_o+V	E	$10^{E/S}$	$\psi = (V_o+V)10^{E/S}$
0	10.000	146 6	318 72	3187.2
5	10.005	142.8	274.49	2746.3
10	10.010	138.4	230.88	2311.1
15	10.015	133.2	188.19	1884.7
20	10.020	126.6	145.17	1454 6

Linear least squares fit of V vs ψ:

Slope	-0.01156
Intercept (V_e)	36 77
Correlation Coef.	1 0000

Amount of strong acid in titration vessel:

$(H^+) = 36.77\ \mu l \times 0.01N = 0.368\ \mu equivalent$

Figure 4-1. *Gran strong acid data form and calculations*

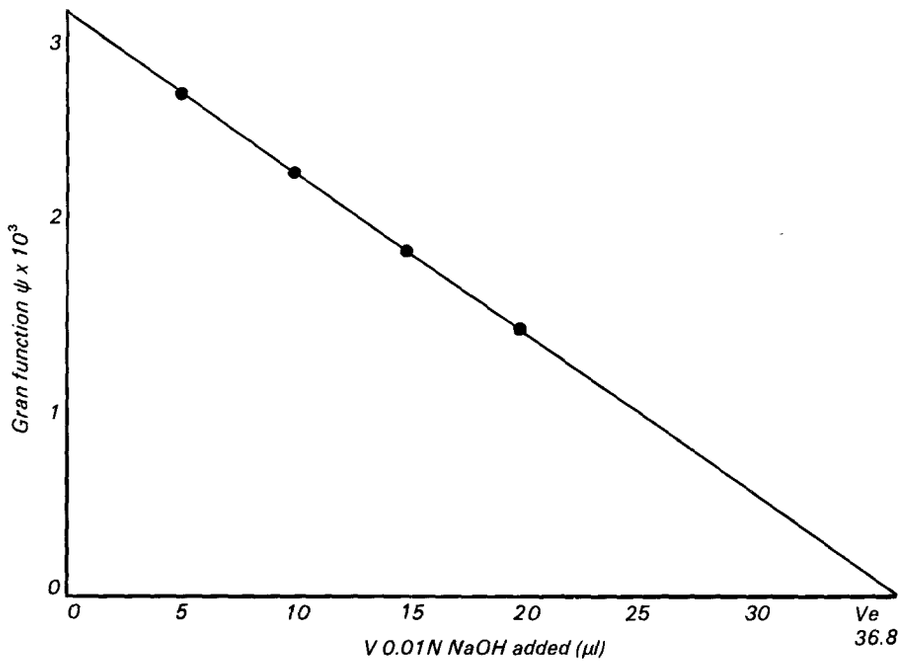

Figure 4-2. *Plot of the Gran function (ψ) versus the volume of titrant added (V) in the determination of strong acid.*

4. Analyze an additional conditioning solution and spike at the end of a day's analyses
5. Precision and accuracy data are not available.

4.5.2 *Acidity*

4.5.2.1 Scope and Application—This procedure is applicable to rainwater, surface, and other waters with pH less than 8.3; is a measure of the concentration of strong and weak acids that react with OH^- ions (including dissolved gases); and has a range dependent on the volume of sample titrated and on the precision with which the increments of titrant can be measured

Titrate samples with 0.02N CO_3-free NaOH solution (if 10 ml of sample is available for analysis, use a 50-ul syringe for dispensing the titrant to achieve a precision better than 10 ueq/L), measure the endpoint with a pH meter; and report results as ueq/L

The sample container must be filled completely, sealed, and stored at 4°C. Care must be taken to minimize exposure of the sample to the atmosphere. Open the sample container immediately before analysis Analysis should be performed as soon as possible after collection Samples with an initial pH between 4 3 and 8.3 are subject to error due to the loss or gain of dissolved gases during sampling, storage, and analysis.

4.5.2.2 Apparatus—
1. pH meter and electrode (Section 4.3).
2. Microburette or microsyringe.
3. Teflon or glass magnetic stirring bar.
4. Magnetic stirrer.
5. Beakers or flasks.

4.5.2.3 Reagents—
1. Standard solution, 1 0N NaOH—Dissolve 40 g NaOH in 250 ml deionized water. Cool and dilute to 1 liter with CO_2-free distilled water. Store in a polyolefin bottle fitted with a soda lime tube or a tight cap to protect from atmospheric CO_2.
2. Standard titrant, 0.02N NaOH—Dilute 20.0 ml of 1.0N NaOH with CO_2-free deionized water to 1 liter. Store in rubber stoppered bottle. Protect from atmospheric CO_2 by using a soda lime tube. Standardize against a 0.02N potassium acid phthalate solution prepared by dissolving 4.085g of anhydrous $KHC_8H_4O_4$ in CO_2-free distilled water and diluting to 1 liter.
3. Spike Solutions, 1.0×10^{-5}N and 3.0×10^{-5} NH_2SO_4—Prepare "analyst spikes" daily from an independent stock solution (4.5.1.3).

4.5.2.4 Procedure—

1. Pipette an appropriate aliquot of sample into a beaker or flask containing a small Teflon or glass stirring bar; use extreme care to minimize the sample surface disturbance.
2. Immerse pH electrode(s) into sample; stir at a rate which does not cause sample surface disturbance
3. Titrate with 0.02N NaOH to pH 8.3 as quickly as possible to prevent absorption of atmospheric CO_2.
4. Record the volume of the titrant.

4.5.2.5 Calculation—Acidity is calculated as follows:

$$ueq/L = ml_B \times N_B \times 10^6/ml_S \quad 4\text{-}7$$

where ml_B = Volume NaOH titrant, ml,
ml_S = Volume of sample, ml, and
N_B = normality of titrant

4.5.2.6 Quality Control—Analyst spikes should be titrated daily. Plot and evaluate the values on the real-time plots (QA manual, Section 7.6.5.1) Precision and accuracy data are not available.

4.6 Ammonium Determinations Using Automated Colorimetry (10)

4.6.1 *Scope and Application*

This procedure covers determinations of NH_4^+ in drinking, rain, and surface waters in the range of 0.05 to 4.0 mg/l NH_4^+; this range is for photometric measurements made at 630 to 660 nm in a 15-mm or 50-mm tubular flow cell. Higher concentrations can be determined by sample dilution. Approximately 20 to 60 samples/h can be analyzed.

Alkaline phenol and hypochlorite react with NH_4^+ to form indophenol blue, the absorption of which is proportional to the NH_4^+ concentration. The blue color is intensified with sodium nitroprusside.

Beware of interferences during the measurements. If Ca^{++} and Mg^{++} ions are present in sufficient concentrations, precipitation problems can occur during analysis. A Na-K tartrate solution prevents precipitation of the alkaline earth hydroxides.

Sample turbidity and color may interfere; before analysis, turbidity must be removed by filtration. Sample color that absorbs in the photometric range should be avoided.

4.6.2 *Apparatus*

Technicon AutoAnalyzer Unit (AAI or AAII) consisting of.

1. Sampler,
2. Manifold (AAI) or analytical cartridge (AAII),
3. Proportioning pump,
4. Heating bath with double delay coil (AAI),
5. Colorimeter equipped with 15-mm tubular flow cell and 630 to 660-nm filters,
6. Recorder, and
7. Digital printer for AAII (optional)

4.6.3 *Reagents*

1. *Deionized Water* - All solutions must be made using NH_4^+-free water (Section 7.1.11 QA manual (6))
2. *Sulfuric Acid, 5N* (air scrubber solution) - Carefully add 139 ml of conc H_2SO_4 to approximately 500 ml of deionized water; cool to room temperature, and dilute 1-liter with deionized water
3. *Sodium Phenolate* - Using a 1-liter Erlenmeyer flask, dissolve 83 g phenol in 500 ml of deionized water In small increments, cautiously add with agitation, 32 g of NaOH. Periodically, cool flask under water faucet. When cool, dilute to 1 liter with deionized water.
4. *Sodium Hypochlorite Solution* - Dilute 250 ml of a bleach solution containing 5.25% NaOCl (e.g., Clorox) to 500 ml with deionized water. Available chlorine level should approximate 2% to 3%. (Since Clorox is a proprietary product, its formulation is subject to change; the analyst must remain alert to detect significant change.) Due to the instability of this product, storage over an extended period should be avoided.
5. *Sodium Potassium Tartrate Solution* $NaKC_4H_4O_6 \cdot 4H_2O$ - To 900 ml of deionized water add 100 g of $NaKC_4H_4O_6 \cdot 4H_2O$. Add two pellets of NaOH and a few boiling chips; boil gently for 45 min. Cover, cool, and dilute to 1 liter with NH_4^+-free deionized water Adjust pH to 5.2 ±0.05 with H_2SO_4. After allowing to settle overnight in a cool place, filter to remove precipitate. Add 0.5 ml Brij 35 solution(11) (available from Technicon Corp.), and store in stoppered bottle.
6. *Sodium Nitroprusside (0.05%)* - Dissolve 0.5 g of sodium nitroprusside in 1 liter of deionized water.
7. *Stock Solution* - Dissolve 0.2966 g of anhydrous NH_4Cl, dried at 105°C, in deionized water, and dilute to 1000 ml (100 mg/l NH_4^+).
8. *Standard Solution A* - Dilute 10.0 ml of stock solution to 200 ml with deionized water (5.0 mg/l NH_4^+).
9. *Standard Solution B* - Dilute 40.0 ml of stock solution to 100.0 ml with deionized water (40 0 mg/l NH_4^+)
10. *Working Standards* - Using standard solutions A and B, prepare fresh daily the following dilutions in 100-ml volumetric flasks

Standard	NH_4^+ mg/l	Milliliters of Standard Solution A or B per 100 ml working standard
A	0.05	1 0 of A
B	0 10	2 0 of A
C	0 20	4.0 of A
D	0 40	8 0 of A
E	0.8	2.0 of B
F	1.6	4.0 of B
G	3 2	8 0 of B
H	4.0	10 0 of B

4.6.4 *Procedure*

For a working range of 0.05 to 4.0 mg NH_4^+ (AAI), set up the manifold as shown in Figure 4-3. For a working range of 0.05 to 1.6 mg NH_4^+ (AAII), set up the manifold as shown in Figure 4-4. Higher sample concentrations may be accommodated by dilution.

1. Allow both the colorimeter and the recorder to warm up for 30 min; obtain a stable baseline with all reagents, while feeding deionized water through the sample line.
2. For the AAI system, sample at a rate of 20/h with the 1:1 cam; for the AAII use a rate of 60/h with the 6:1 cam and a common wash.
3. Arrange NH_4^+ standards in the sampler in order of decreasing concentration; complete the loading of the sampler tray with unknown samples.
4. Switch the sample line from deionized distilled water to the sampler, and begin the analysis.
5. Analyze the full calibration curve every 30 samples and between curves analyze one standard every 10 samples; periodically, check the baseline by turning off the sampler for approximately 1 min.
6. When an analytical run is completed, draw a baseline between the baseline sections of the chart; measure the peak heights of the standards and samples; and record them on the data form (Figure 4-5).

4.6.4.1 Notes on Operation—For the low-level NH_4^+ analysis, take extreme care to avoid NH_4^+ contamination since NH_4^+ is ubiquitous in the laboratory. Rinse the glassware immediately before

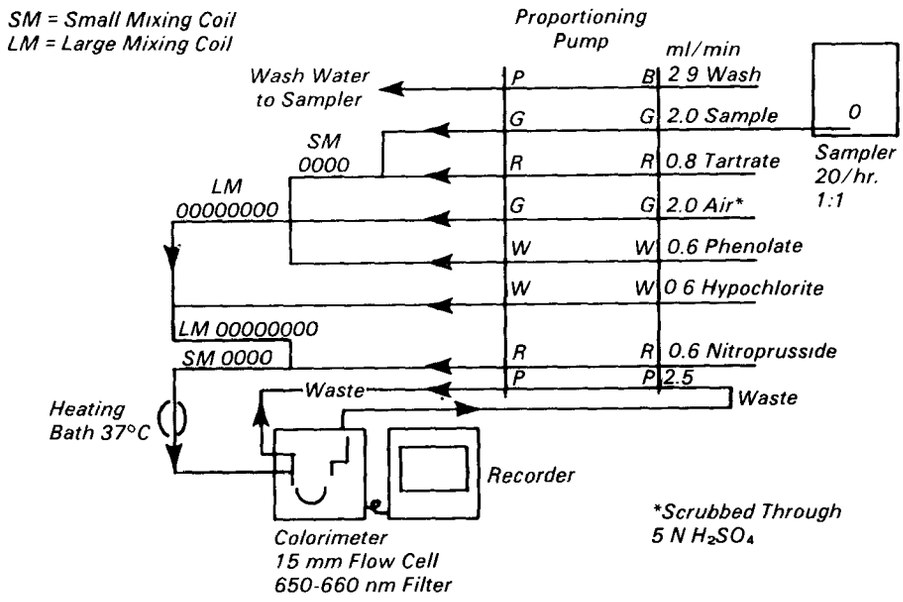

Figure 4-3. *Ammonia manifold AA I.*

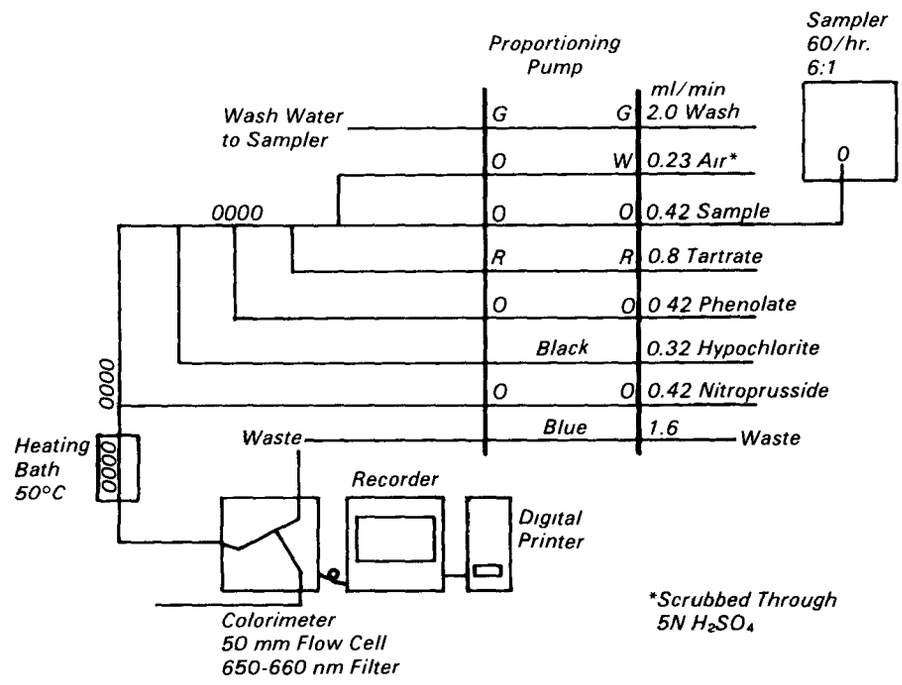

Figure 4-4. *Ammonia manifold AA II.*

use Do not wipe the pipettes before delivering the solution. Prepare all reagents with NH_4^+-free water. Wear gloves when handling reagents or samples. Connect the airlines which introduce bubbles into the automated flow system to a bubbler filled with 5N H_2SO_4 so that NH_3 gas is scrubbed from the air before the air is introduced to the system.

After setup, be sure the bubble patterns are evenly segmented, that all connectors are properly butted, that no leaks are present, and that aspiration of the sample is adequate.

Before analysis, the recorder response is set. The recorder scale is set at 50-mv full-scale response (20 mv if expanded scale NH_4^+ is being run). The recorder input should be shorted, and the recorder baseline adjust should be set at 0% of the chart; then the recorder input should be connected to the colorimeter. (White wire is positive, black is negative, green is ground, and red is reference voltage.)

The colorimeter display rotary switch should be set to zero and the output on the recorder should be set at 0% of the chart by adjusting the zero screw on the colorimeter operating panel; then the colorimeter display rotary switch should be set to FULL SCALE, and the output on the recorder should be set to 100% of chart by adjusting the FULL SCALE screw on the colorimeter operation panel; and finally, the colorimeter display rotary screw should be placed in the NORMAL position.

The baseline should be set after all reagents have been flowing for at least 15 min; the aperture for the sample beam (knob A) should be opened all the way; and then the aperture for the reference beam should be adjusted to set the baseline on the recorder. The aperture adjustment should be considered a coarse adjustment of the baseline, and the fine adjustment is done with the BASELINE knob on the colorimeter aperture panel.

After the baseline is set, the full-scale response should be set by placing the sample probe in a standard solution giving a full-scale response. When a response is obtained, the colorimeter scale expansion is adjusted by turning the STD CAL to bring the full-scale response to the desired level on the strip chart recorder. The STD CAL should be set so that baseline noise of 1% of full scale is obtained when deionized water is analyzed.

A second recorder may be used to monitor the lower half of the analytical range. Although the nominal output is 50 mv, the system can be set up so that 1% baseline noise is obtained with 20 mv. For routine analysis, the output may be monitored with one recorder set at 20 mv full scale and with another at 50 mv full scale. Note the STD CAL number on the strip chart and on the data form.

Release the tension on the pump tubes after each day of analysis. Replace pump tubes after 3 days of use.

4.6.4.2 **Troubleshooting—Detailed** troubleshooting procedures are generally given by the the instrument manufacturer. Presented briefly below are a static (electronic) test and a dynamic test. The *static test* is performed by pumping water through the flow cell; turning off the pump; and adjusting the baseline (using the A and B aperture controls on the colorimeter) to bring the recorder response to 50%. The *dynamic test* is performed with the normal system set up and flowing. Deionized water is sampled; all other delivery tubes are placed in the appropriate reagents; and the baseline should be set

DATA SHEET

12-17-80
P1

		Sample ID			NH_4^+ Peak Ht. 20 mv			NH_4^+ Peak Ht. 50 mv	STD CAL: 414	
1	Std A				2.5			0.1		
2	Std B				4.3			0.5		
3	Std C				9.3			2.3		
4	Std D				18.9			6.0		
5	Std E				39.5			13.2		
6	Std F				80.9			28.0		
7	Std G							59.1		
8	Std H							76.5		
9	H_2O									
10	Spike	(46 mg/l NH_4^+)			80.1			27.7		
11		#1595			3.3					
12		1596			3.1					
13		1597			off			36.2		
14		1598						36.3		
15		1599			61.1					
16		1600			61.0					
17		1601			53.6					
18		1602			53.5					
19		1603			23.4					
20	Std E									
21	H_2O									
22		1604			24.9					
23		1605			45.2					
24		1606			10.3					
25		1607			70.1					
26		1608			35.4					
27		1609			23.4					
28		1610			61.5					
29		1611			15.6					
30		1612			19.1					
31		1613			23.0					
32	Std D									
33	H_2O									
34		1614			0.3					
35		1615			1.9					
36		1616			5.8					
37		1617			off			42.1		
38		1618			12.1					

Figure 4-5. Ammonium analysis - peak heights.

at 50% of full scale (using the A and B aperture controls on the colorimeter) AS A FIRST STEP IN TROUBLESHOOTING, CHECK ALL ELECTRICAL CONNECTIONS TO SEE THAT GOOD CONTACT IS MADE AND THAT NO SHORTS EXIST. Below are four typical problems and procedures for solving them

1. *Baseline Drift*

   Static Test - a drift noted with the static test may be due to inadequate warmup of electronic components, defective colorimeter lamp, defective photocell or a defective recorder. Replace the suspected defective components. Check the photocells by switching the reference and sample positions; if the baseline drift changes direction, one photocell is bad. If the baseline does not drift during the static test, the problem is not electronic; the problem is the dynamics of the system.

   Dynamic Test - If baseline drift is noted with the dynamic test, check the bubble flow pattern. An erratic bubble flow pattern may be due to a leak which usually can be stopped by tightening connections and making sure glass tubing abuts together. Other causes of drift include poorly mixed reagents, bad pump tubes, and reagent degradation; replace suspected tubes and reagents.

2. *Baseline Noise*

   Static Test - If baseline noise is observed, the problem is electrical. Check to see if the gain adjustment (STD CAL) is too high; if it is, the problem is sensitivity. If STD CAL is normal, the problem may be poor electrical connections, a defective lamp, a defective photocell, or a defective recorder; check each of these, and replace the defective components as necessary.

   Dynamic Test - Baseline noise in the dynamic system may be due to leaks observed as an erratic bubble pattern. If so, proceed as indicated above (baseline drift-dynamic test). Other causes of dynamic baseline noise include wornout pump tubes, degassing of reagents (bubbles in the flow), poorly mixed reagents, improperly pumped reagents, and reagents containing particulates or air bubbles in the flow cell. Replace reagents and pump tubes as necessary. If a bubble is suspected in the flow cell, pinch its exit tube for 5 s to dislodge the bubble.

3. *Poor Sensitivity* - If poor sensitivity is observed, be sure that the gain (STD CAL) is normal, the recorder is set on 50-mv full-scale response, and the color filters are correct Replace the pump tubes if they are old. Adjust the flow cell alignment and the colorimeter mirror assembly alignment (manufacturer's instructions), and optically peak the colorimeter. If the problem is still not solved, it may be due to improperly prepared reagents or calibration standards, prepare fresh solutions if they are suspect.
4. *Sensitivity Changes* - Sensitivity changes not accompanied by increased baseline noise are probably due to defective pump tubes, degradation of reagents, or recorder problems. Replace reagents and pump tubes as necessary. Check the recorder response for stability, using a constant ~40 mv source.
5. *Nonlinear Calibration Curves* - If none of the problems indicated above is noted, then nonlinear calibration curves are probably due to incorrectly prepared reagents or standards or to nonlinear recorder responses. Prepare fresh reagents and standards as necessary. Check recorder response using a constant voltage source which delivers 10, 20, 30, 40, and 50 mv.

4.6.5 *Calculations*

Using a Graph - Prepare a standard curve by plotting peak heights of processed standards against their concentrations; compute the concentration of samples by comparing sample peak heights with those on the standard curve.

Using Linear Least Squares Fit - Use the equations for calculation of the linear least squares fit that are available in most elementary statistics books (e.g., see Reference 9). The linear least squares equation gives the following parameters: slope (m), intercept (b), error of fit (e), and correlation coefficient (r). The slope and intercept define a relationship between the concentration of the standard (x_i) and the predicted instrument response (Y_i).

$$Y_i = mx_i + b. \qquad 4\text{-}8$$

Equation 4-8 is preferred for fitting where the major components of random variance are assumed to be in instrument response; a simple rearrangement of Equation 4-8 yields concentration (x_j) corresponding to an instrument response (Y_j) of a sample j;

$$x_j = (Y_j - b)/m. \qquad 4\text{-}9$$

4.6.6 *Quality Control*

1. After every 30 samples analyze at least five calibration curve standards. With every 10 samples, repeat one standard. If responses to these standards change more than 5%, stop the analysis, and determine the cause.
2. Every 30 samples, analyze an analyst spike (Section 7.6.4.1 of QA manual (6)), a duplicate, and an old sample. Calculate the first spike of the day from the first calibration curve, and plot the value on the real-time plot (Section 7 6.5.1, QA manual (6)) Compare these data with previous data; if the control limits are exceeded, stop the analysis, and search for the problem.
3. When preparing new stock solution (Section 4.6.3), prepare dilute calibration standards from the old and the new stocks. Analyze the old and new standards; compare the calibration curves; and complete the Standard Preparation form in Section 4 10.

4.7 Orthophosphate Determinations Using Automated Colorimetry (12)

4.7.1 *Scope and Application*

This procedure covers the determination of phosphate in drinking, rain, and surface waters; it is based on reactions specific for dissolved orthophosphate; it is usable for 0.02 to 0.4 mg/l PO_4^{-3}.

Ammonium molybdate and antimony-potassium tartrate react in an acid medium with dilute solutions of orthophosphate ion to form an antimony-phosphomolybdate complex, which is reduced to a blue complex by ascorbic acid. The intensity of the color is proportional to the phosphate concentration.

No interference is caused by copper, iron, or silicate at concentrations many times greater than those reported in rain water. Sample turbidity must be removed by filtration before analysis of orthophosphate. Sample color that absorbs in the photometric range also interferes.

4.7.2 *Apparatus*

The Technicon AutoAnalyzer consists of:

1. Sampler,
2. Manifold (AAI) or analytical cartridge (AAII),
3. Proportioning pump,
4. Heating bath, 50°C,
5. Colorimeter with 15- or 50-mm tubular flow cell,
6. 880-nm filter,
7. Recorder, and
8. Digital printer for AAII (optional).

Wash all glassware with hot 1:1 HCl and rinse with deionized water. Never use commercial detergents that contain phosphate.

4.7.3 *Reagents*

1. *Sulfuric Acid Solution, 5N* - Slowly add 70 ml of conc H_2SO_4 to approximately 400 ml of deionized water, cool to room temperature; and dilute to 500 ml with deionized water.
2. *Antimony Potassium Tartrate Solution* - Weigh 0.3 g $K(SbO)C_4H_4O_6 \cdot 1/2\ H_2O$; dissolve in 50 ml of deionized water in a 100 ml volumetric flask; dilute to volume with deionized water; and store at 4°C in a dark glass-stoppered bottle.
3. *Ammonium Molybdate Solution* - Dissolve 4 g $(NH_4)_6Mo_7O_{24} \cdot 4H_2O$ in 100 ml deionized water, and store at 4°C in a plastic bottle.
4. *Ascorbic Acid, 0.1M* - Dissolve 1.8 g of ascorbic acid in 100 ml of distilled water. The solution is stable for about a week if prepared with water containing no more than trace amounts of heavy metals and if stored at 4°C.
5. *Combined Reagent (AAI)* - Mix the above reagents in the following proportions for 100 ml of combined reagent: 50 ml of 5N H_2SO_4, 5 ml of antimony-potassium tartrate solution, 15 ml of ammonium molybdate solution, and 30 ml of ascorbic acid. *Mix after adding each reagent.* All reagents must be at room temperature before they are mixed, and must be mixed in the order given. If turbidity forms, shake the combined reagent, and let stand for a few minutes (until the turbidity disappears) before processing. The 100 ml is sufficient for 4 h of operation. Since the stability of the combined solution is limited, prepare fresh solution for each run. NOTE 1: The combined reagent deteriorates less rapidly if kept cold (~5°C) while being pumped into the system. NOTE 2: The combined reagent is more stable if ascorbic acid is excluded and if the mixed reagent (molybdate, tartrate, and acid) is pumped through the distilled water line and the ascorbic acid solution (30 ml of 7.4 diluted to 100 ml with distilled water) through the original mixed reagent line.
6. *Stock Phosphate Solution* - Dissolve 0.1434 g of predried (105°C for 1 h) KH_2PO_4 in deionized water, and dilute to 1000 ml (100 mg/l PO_4^{-3}).
7. *Standard Phosphate Solution* - Dilute 2.0 ml of stock solution to 100 ml with deionized water (2 mg/l PO_4^{-3}).
8. Prepare a series of standards by diluting suitable volumes of standard solution to 100 ml with deionized water. The following dilutions are suggested:

Standard	Concentration mg/l PO_4-3	Standard Phosphorus Solution, ml
A	0.02	1.0
B	0.04	2.0
C	0.08	4.0
D	0.12	6.0
E	0.20	10.0
F	0.30	15.0
G	0.40	20.0

4.7.4 *Procedure*

1. Set up the manifold (Figure 4-6, AAI; Figure 4-7, AAII).
2. Allow both the colorimeter and the recorder to arm up for 30 min. Obtain a stable baseline with all reagents when pumping deionized water through the sample line.
3. For the AAI system, sample at a rate of 20/h, 1 min sample, 2 min wash. For the AAII system, use a 30/h, 2:1 cam, and a common wash.
4. Place standards in sampler in order of decreasing concentrations. Complete filling of the sampler tray with unknown and control samples.
5. Switch the sample line from deionized water to sampler, and begin the analysis.
6. Analyze the full calibration curve every 30 samples; repeat one standard every 10 samples. Periodically, obtain a baseline by turning off the sampler while in deionized rinse water for approximately 1 min.
7. When analytical run is completed, draw a line between the baseline sections of the chart. Measure the peak heights of the standards and samples, and record them on the data form, Figure 4-5 for NH_3^+.

4.7.4.1 Notes on Operation—Most of the information in Section 4.6.4.1 is applicable to the operation of the autoanalyzer for orthophosphates. The color complex formed in the phosphate analysis absorbs at a wavelength of 880 nm. It is critical that the correct interference filters and a red-sensitive phototube (Technicon 199-B021-04) be used to obtain the greatest sensitivity.

4.7.4.2 Troubleshooting—The information covered in Section 4.6.4.2 is applicable to troubleshooting for the operation of the autoanalyzer for orthophosphate.

4.7.5 *Calculations*

Using A Graph — Prepare a standard curve by plotting peak heights of processed standards against their concentrations; compute the concentrations of samples by comparing sample peak heights with the standard curve.

Using Linear Least Squares Fit —The equations for linear least squares fit are available in most elementary statistics books (e.g., see Reference 9). The linear least squares fit yields the following parameters: slope (m), intercept (b), error of fit (e), and correlation coefficient (r). The slope and intercept define a relationship between the concentrations of

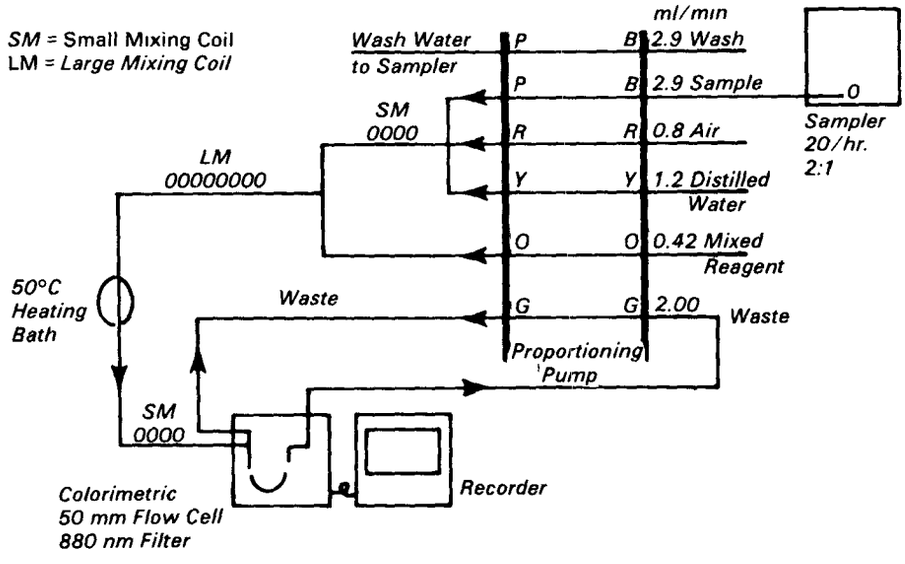

Figure 4-6. Phosphorus manifold AA I.

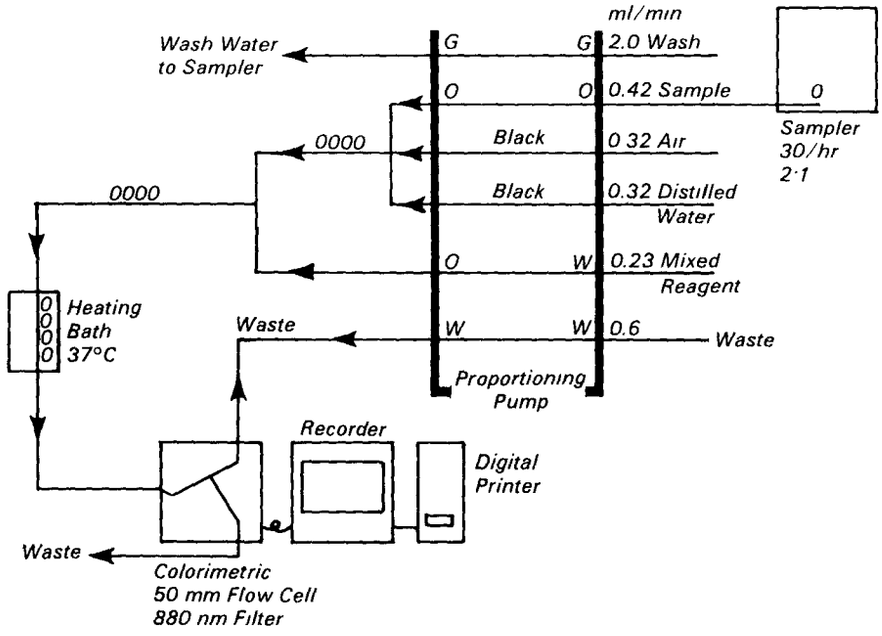

Figure 4-7. Phosphorus manifold AA II.

standards (x_i) and the predicted instrument response (Y_i).

$$Y_i = mx_i + b. \qquad 4\text{-}10$$

Equation 4-10 is preferred for fitting where major components of random variance are assumed to be in instrument response. A simple rearrangement of Equation 4-10 yields the concentration (x_i) corresponding to an instrumental measurement (Y_j) of a sample j.

$$X_j = (Y_j - b)/m \qquad 4\text{-}11$$

4.7.6 *Quality Control*

1. Analyze at least five calibration curve standards every 30 samples. With every 10 samples, repeat one standard. If the responses change more than 5%, stop the analysis, and determine the cause.
2. Analyze an analyst spike (Section 7.6.4.1, QA manual (6)), a duplicate, and an old sample every 30 samples. Calculate the first spike of the day from the first calibration curve, and plot the value on the real-time plot (Section 7.6.5.1, QA manual (6)). Compare these data with those obtained in the past. If the control limits are exceeded, stop the analysis, and search for the problem.
3. When preparing new stock solution (Section 4.7.3), prepare dilute calibration standards, from the old and the new stock. Analyze the old and new standards and compare the calibration curves. Complete the Standard Preparation form in Section 4.10.

4.8 Sulfate, Nitrate, Phosphate, and Chloride Determination Using Ion Chromatography

4.8.1 *Scope and Application*

This procedure covers the determination of sulfate, nitrate, phosphate and choride in rainwater. The anions are separated on an ion exchange column because of their different affinities for the exchange material. The material commonly used for anions is a polymer coated with quaternary ammonium active sites. After separation, the anions pass through a strong acid cation exchange column (suppressor column) which exchanges all cations for H^+ ions. All species are detected as acids by a conductivity meter

Any species with a retention time similar to that of the sought anions will interfere. With the possible exception of NO_2^-, rainwater does not contain any such species. If NO_2^- is present, it will elute just after the Cl^-, and the shape of the Cl^- peak will be assymetric. Large amounts of anions eluting close to those anions of interest will interfere (e.g., 10 mg/l NO_3^- will mask 0.1 mg/l PO_4^{-3}); thus the automated colorimetric procedure is preferred for PO_4^{-3} in rainwater.

4.8.2 *Sample Preparation*

When an aqueous sample is injected, the water passes rapidly through both the separator and the suppressor columns, and gives rise to a very low conductivity. This negative water dip interferes with the Cl^- analysis; thus it is necessary to remove the water dip for low-level Cl^- analysis by adding concentrated eluent to all samples and standards

When manual addition is necessary, use a micropipette to deliver concentrated buffer into each sample. The recommended procedure (13) is:

1. Prepare 4 liters of the concentrated eluent, 0.6M $NaHCO_3$/0.48M Na_2CO_3, in a collapsible 4 liter bottle protected from air.
2. Each day of analysis, prepare 4 liters of working eluent from the concentrated eluent, and pour an aliquot of the concentrate to be used for preparing samples.
3. Pour each sample or standard into a cleaned plastic test tube to a previously established 10 ml mark; micropipette 50 ul of the concentrated buffer into the test tube; seal the top with parafilm, and shake to mix.

NOTE: It is important that the concentrated eluent form the 4 liter bottle be taken at the same point in time for working eluent and for sample preparation so that the prepared samples are analyzed using working eluent prepared from the identical concentrated eluent.

4.8.3 *Apparatus*

1. Ion chromatograph (Dionex manual models 10, 14, 16 or Dionex Auto Ion System 12) with anion separator column (P/N 30827) and anion suppresssor column (P/N 30828).
2. Automated injection system (14) consisting of: *Technicon auto sampler,* and *Controller for sampling and injection.* This controller cannot be purchased; it must be built. The automatic cycle is initiated when the sample probe moves from the rinse cup to the sample, sets a timer and causes injection (a pre-determined time after this event). The length of time the valve stays in the inject position is set with another timer. These timing circuits cause injection by activating electrically controlled pneumatic valves. With a proportioning pump, either sample or rinse water is continually pumped through the injection loop, which is only "on-line" with the Dionex system for the 30 s injection.

   Technicon proportioning pump and pump tubes - This pump is used to feed sample or rinse water continually through the injection loop. No automated injection system is needed if Dionex Auto Ion System 12 is available.

3. Data Recording System - Integration or strip chart recorders can be used for recording the ion chromatographic peaks. The nominal output to the recorder is 1.0 v. The Dionex plane parallel electrode conductivity detector, however, gives a linear response with concentration until electronic saturation occurs at approximately 4.0 v. Therefore, several analytical ranges on recorders set at different full-scale voltages can be monitored simultaneously.
4. Collapsible bags, 4- and 20-liter.
5. Pipettes - an assortment of sizes.
6. Volumetric flasks - an assortment of sizes.
7. Two recorders or one recorder with dual pens.
8. Disposable sample cups for autosampler.

4.8.4 *Reagents*

1. *Concentrated Eluent, 0.6M $NaHCO_3$/04.8M Na_2CO_3* - Dissolve 100.8407 g $NaHCO_3$ and 101.7509g Na_2CO_3 in 2 liters of hot deionized water.
2. *Working Eluent, 0.003M $NaHCO_3$/ 0.0024M Na_2CO_3* - Dilute 20 ml of concentrated eluent (0.6M $NaHCO_3$/ 0.48M Na_2CO_3) to 4 liters with deionized water; transfer to a 4-liter collapsible bag. (If a 20 liter collapsible bag is used, dilute 100 ml concentrated eluent to 20 liters.)
3. *Regenerant, 1.0N H_2SO_4* - Add 111.1 ml of conc H_2SO_4 to ~3 liters of deionized water in a 4-liter collapsible bag; dilute to ~4 liters.
4. *Concentrated Buffer, 14%* - Dilute ~7 ml of concentrated eluent (0.6M $NaHCO_3$/0.48M Na_2CO_3) to 59 ml with deionized water.
5. *Mixed Stock Solution,* - 1000 mg/l $SO_4^=$, NO_3^-, PO_4^{-3}; 200 mg/l Cl^-. Dissolve 0.3297 g NaCl, 1.433 g of KH_2PO_4, 1.6305 g KNO_3 and 1.814 2g K_2SO_4 in 1 liter of deionized water. Complete the Standard Preparation form (end of Section 4.8).
6. *Standard Solution A* - Dilute 10 ml of mixed stock solution to 100 ml with deionized water (100 mg/l $SO_4^=$, NO_3^-, PO_4^{-3}, and 20 mg/l Cl^-).
7. *Standard Solution B* - Dilute 10 ml standard solution A to 100 ml with deionized water (10 mg/l $SO_4^=$, NO_3^-, PO_4^{-3}, and 20 mg/l Cl^-).
8. *Working Standards* - Use standard solutions A and B to prepare the working standards listed in Table 4-2. These standards are prepared by diluting the indicated volumes of standard solutions A or B to 100 ml with deionized water.

Table 4-2. *Concentration of Working Standards Used for the Analysis of Rainwater Samples by Ion Chromatography.*

Working Standard	*Concentration in mg/l*		*Milliliters of Standard Solution A or B per 100/ml of working standard.*
	$SO_4^=$, NO_3^-, PO_4^{-3}	Cl^-	
A	*10*	*2*	*10 ml of A*
B	*5*	*1*	*5 ml of A*
C	*1*	*0.2*	*10 ml of B*
D	*0 5*	*0.1*	*5 ml of B*
E	*0.1*	*0.02*	*1 ml of B*

4.8.5 *Procedure*

1. Regenerate the suppressor column with 1.0N H_2SO_4 for 5 min, rinse with deionized water for 15 min.
2. Set up the recorders for the most sensitive range and for any additional ranges needed (Section 4.8 3).
3. Recommendations of optimum Dionex sensitivity:
   A 0 003M $NaHCO_3$/0.0024M Na_2CO_3 eluent with normal anion separator and suppressor,
   B. 1 5 umho/cm full scale on recorder,
   C 0.8-ml injection loop,
   D. Flow rate for column back pressure of 650 psi, and
   E. Pressure gauge used as pump stroke noise suppressor
4. Begin to pump the eluent through the columns. After a stable baseline is obtained, inject the highest standard either manually or with the autosampler. Adjust the zero to approximately 10% of the chart; as the highest standard for NO_3^- elutes, adjust the recorder calibration to approximately 90% of the chart
5. Fill the autosampler with standards and samples, starting with the highest concentration standard and decreasing the concentrations, or inject the samples manually in the same order. The first sample to be analyzed should be a quality control sample; a standard should be analyzed after 10 samples and (if possible) a full standard curve should be analyzed after the samples. List the samples on the data form in the order corresponding to their position on the sample tray.
6. Turn on the autosampler to start analyzing samples.
7. When the run is complete, number the samples on the strip chart; draw a baseline for each sample or standard; measure the peak height with a clear plastic ruler; and record the peak height on the strip chart and on the data form (Figure 4-5).

4.8.6 *Calculations*

Using a Graph — Construct calibration curves by plotting concentrations of standards against the peak height for each analyte. Read the concentration of the analyte directly from the calibration curves

Using a Linear Least Squares Fit — Equations used for calculation of the linear least squares fit are available in most elementary statistics books (e.g., see Reference 9). The linear least squares fit yields the following parameters: slope (m), intercept (b), error of fit (e) and correlation coefficient (r). The slope and intercept define a relationship between concentration of standard i (x_i) and the predicted instrument response (Y_i),

$$Y_i = mx_i + b. \qquad 4\text{-}12$$

Equation 4-12 is preferred for the major components of random variance assumed to be in instrument response A simple rearrangement of Equation 4-12 yields the concentration (x_i) corresponding to an instrumental response of (Y_i),

$$x_i = (Y_i - b)/m. \qquad 4\text{-}13$$

4.8.7 *Quality Control*

Analyze at least three calibration standards of varying concentration per recorder range for each analytical run. After 10 samples (following the initial standards), run another standard. End the analytical run after an additional ~10 samples with another calibration curve. If the peak heights of the standards change more than 10%, rerun the samples.

Analyze an analyst spike (Section 7.6.4.1, QA manual (6)) during every run. Calculate the spike concentration from the first calibration curve, and plot the value on the real-time plot (Section 7.6.5.1, QA manual (6)). Compare these data with those obtained in the past. If the control limits are exceeded, stop the analysis, and search for the problem. Periodically, analyze duplicates and old samples.

Periodically, check the resolution of the Dionex anion separator column by analyzing a standard containing Br^- and NO_3^- in equal concentrations close to a

full-scale response (~1ug/ml) on the most sensitive analytical range. After this standard is run, complete the Dionex Resolution Test form (Section 4 10) which indicates the method for calculating the percentage resolution of Br^- and NO_3^-. Check the resolution periodically, particularly if Br^- is known to be in the samples. If Br^- is present, use Dionex anion separator columns which give better than 60% resolutions of Br^- and NO_3^-; if Br^- is not present, use Dionex anion separator columns until the $SO_4^=$ and NO_3^- resolution are at least 60%. The column resolution should be first documented as part of the instrument performance study for the ion chromatograph (Section 7.5.3, QA manual (6)), so that the resolution of a specific column can be monitored as it decreases with extended use

When preparing a new stock solution (Section 4.8.4), prepare dilute calibration standards from the old and the new stock. Analyze the old and new standards, and compare the calibration curves. Complete the Standard Preparation form in Section 4.10.

4.8.8 *Troubleshooting*

The most common problem with an ion chromatograph is leakage. Depending on the location of the leak, low column back pressure, a noisy baseline, irreproducibility, or no instrumental response may develop. Leaks may be stopped by tightening the fittings. The Dionex fittings should be tightened by hand only; more pressure can be exerted if a cloth is placed over the fitting. If tightening does not stop the leak, the tubing used for the fitting should be reflared.

Another common problem is air in the system; this problem is also observed as a noisy baseline. If air is in the columns, let the system run until the air is out. If the air is not in the columns, take both columns offline, and let the system pump at 100% flow; the flow should return to normal, and both columns can be put back on line.

Other less common probems are a leaky valve, a plugged column, or a plugged flow cell. A leaky valve may cause baseline noise. The leaking may be stopped by loosening and retightening all fittings evenly, or it may be necessary to disassemble and clean the valve ultrasonically in water.

A plugged column is indicated by increased back pressure and loss of resolution. To clean a plugged column, use the following procedure: (1) remove and clean the inlet column fitting and the Teflon cloth filter, (2) reassemble and test the column. If back pressure is still high, reduce the percentage flow to less than 10%; place the column backwards in the system; (with the inlet column fitting off) pump off the top 1/8 in. of column resin; replace the Teflon cloth filter; reassemble the end fitting; put the end fitting back on; pump the resin back down into the column; place the column back in the system with its original orientation. A special tool is required to remove the column end fitting from the suppressor column. Once the end fitting is removed, the suppressor column filters may be cleaned.

A plugged flow cell leads to significant baseline noise. To clean and clear a plugged flow cell, switch both columns offline, remove the fitting from the exit (top) of the flow cell, and pump eluent through at 100% flow

If a loss of resolution is not due to a plugged column, be sure the eluent was correctly prepared. If it was correctly prepared, consult with Dionex before attempting any analytical column-cleaning procedures

Poor reproducibility may be caused by improper rinsing of the injection loop; it should be rinsed with a sample volume at least three times the volume of the injection loop

If there is no pressure showing on the gauge and if no leak is found, then the pump may have to be primed. Remove the top fitting from the liquid end, increase the flow to 100%, and purge all the air from the pump to reduce the flow rate to normal; reconnect the pump fitting.

4.9 Metal Determinations by Atomic Absorption Spectroscopy (15)

4.9.1 *General Method*

4.9.1.1 Scope and Application—Metals in solution may be determined by atomic absorption spectroscopy. The procedure is simple, rapid, and applicable to the determination of Na^+, K^+, Ca^{++} and Mg^{++} in rainwater. Detection limits, sensitivity, and optimum ranges vary with makes and models of atomic absorption spectrophotometers. Data in sections for the individual metals indicate ranges measurable by direct aspirate Most concentration ranges may be lowered by scale expansion and extended upwards by a less sensitive wavelength or by rotating the burner head. Detection limits by direct aspiration may be extended through concentration of the sample by addition of conventional solvent extraction techniques. Concentration ranges for the individual metals are somewhat dependent on equipment—for example, the type of spectrophotometer, the energy source, and the degree of electronic expansion of the output signal.

In direct aspiration atomic absorption spectroscopy, a sample is aspirated and atomized in a flame. A light beam from a hollow cathode lamp (cathode made of the element to be determined) is directed through the flame, into a monochromator, and onto a detector that measures the amount of light absorbed. Absorption depends on the presence of free unexcited ground-state atoms in the flame. Since the wavelength of the light beam is characteristic of only the metal being determined, the light energy absorbed by the flame is a measure of the concentration of that metal in the sample.

1. *Optimum Concentration Range* - A range is the concentration limits below which scale expansion must be used and above which curve correction should be considered. This range varies with the sensitivity of the instrument and the operating conditions.
2. *Sensitivity* - The concentration (mg metal/l) that produces a 1% absorption.
3. *Detection Limit* - Detection limits can be either instrumental or procedural The limits of the former (using acid water standards) would be the signal-to-noise ratio and the degree of scale expansion; the latter would be the sample matrix and the preparation procedure. The Scientific Apparatus Makers Association (SAMA) has approved the following definition: the concentration which would yield an absorbance value twice the standard deviation of a series of measurements of a solution, the concentration of which is distinctly detectable above, but is close to the blank absorbance value. Detection limit values listed on the individual analysis forms are to be considered minimum working limits achievable with procedures in this manual; these values may differ from the optimum detection limits reported by various instrument manufacturers.
4. *Dissolved Metals* - Constituents (metals) which pass through a 0.45 um membrane filter.

For determinations of metals, contamination and loss are prime concerns. Dust in the laboratory environment and impurities in reagents or on apparatus which the sample contacts are potential contaminants. Containers for liquid samples can introduce either positive or negative errors in measurement of trace metals by contributing contaminants

through leaching or surface desorption or by depleting concentrations through adsorption Thus for collection and treatment of the sample prior to analysis the sample bottle must be linear polyethylene, polyproplyene or Teflon; it should be thoroughly washed with deionized distilled water As soon as practical after collection, the sample must be filtered through a 0 45 um membrane filter before analyzing dissolved constituents Use plastic filtration apparatus with plain nongridmarked membrane filters to avoid contamination. Use the first 50 to 100 ml to rinse the filter flask, discard this portion, and collect the required filtrate volume To stabilize the samples, add 2 ml 5% - 0.5% HNO_3-$La(NO_3)_3$ solution (4 9.2.2) to 8 ml of each sample.

The most troublesome interference in atomic absorption spectrophotometry is "chemical", and it is caused by lack of absorption of atoms bound in molecular combination in the flame This phenomenon can occur when the flame is not sufficiently hot to dissociate the molecule (e g , PO_4^{-3} interference with Mg^{++}) or when the dissociated atom is immediately oxidized to a compound that does not dissociate further at the flame temperature Addition of lanthanum overcomes the PO_4^{-3} interference in the Mg^{++} and Ca^{++} determinations.

Ionization interferences occur where the flame temperature is sufficiently high to cause removal of an electron from a neutral atom and thus to generate a cation This interference can generally be controlled by addition to both standard and sample solutions of a large excess of an easily ionized element.

Although rare, spectral interference can occur when an element not being determined absorbs light within the width of the absorption line utilized for the determination of the element of interest. The results would be erroneously high due to the interfering element

Interference can occur when resonant energy from an element in a multielement lamp or when metal impurity in the lamp cathode is within the band pass of the slit setting if that metal is in the sample; this interference may be reduced by narrowing the slit width.

4.9.1.2 Apparatus—

1. *Atomic Absorption Spectrophotometer* - Single or dual channel, single or double beam instrument having a monochromator, a photomultiplier detector, adjustable slits, a wavelength range of 190 to 800 nm, and provisions for an interfacing strip chart recorder
2. *Burner* - The type recommended by the instrument manufacturer should be used.
3. *Hollow Cathode Lamps* - Single element lamps are preferred but multielement lamps may be used. Electrodeless discharge lamps may be used when available
4. *Strip Chart Recorder.*
5. *Pipettes and Volumetric Flasks* - various sizes.
6. *Pressure-Reducing Valves* -Supplies of fuel and oxidant are maintained at pressures somewhat higher than controlled operating pressure by suitable valves
7. *Glassware* - All linear polyethylene, polypropylene and Teflon containers, including sample bottles, should be washed with detergent and rinsed with tap water, 1 1 NHO_3, tap water, 1.1 HCl, tap water, and deionized distilled water in that order

4.9.1.3 Reagents —

1 *Deionized Water*
2 *Nitric Acid (conc.)* - If metal impurities are present, use a spectrograde acid.
3. *Lanthanum Nitrate, $La(NO_3)_3 \cdot 6H_2O$* - Use a grade of chemical designated for flame enhancement in atomic absorption
4. *Stock Standard Metal Solutions* - Prepare using individual metal or salt (Section 4.9.1.4). Commercially available stock standard solutions may also be used.
5. *Calibration Standards* - Prepare a series of standards of the metal by diluting the appropriate stock metal solution to cover the concentration range.
6. *Fuel and Oxidant* - Commercial grade acetylene is generally acceptable. Air may be supplied from a compressed air line, a laboratory compressor, or a cylinder of compressed air.

4.9.1.4 Calibration—Prepare stock standard solutions from high-purity metals, oxides, or nonhygroscopic reagent grade salts using deionized distilled water and redistilled HNO_3 or HCl. (See individual analysis forms for specific instructions.) Avoid H_2SO_4 and H_3PO_4 since they adversely affect many elements. Prepare the stock solutions at concentrations of 1000 mg metal/l. Commercially available standard solutions may be used.

Prepare a blank and six calibration standards by diluting the stock metal solutions to various concentrations in the appropriate range; for best results, prepare fresh for each analysis, and discard after use. Prepare calibration standards using the same concentration of acid and lanthanum nitrate as will result in the samples following processing. Since the background contamination in the HNO_3 and lanthanum nitrate may vary, the same stock HNO_3-lanthanum nitrate reagent must be used for both the samples and the calibration standards. Beginning with the blank and proceeding toward the highest standard, aspirate the solutions and record the readings. Prepare a six-point calibration curve after 20 samples, and analyze a single standard after 10 samples.

4.9.1.5 Atomic Absorption (General Procedure)—Differences between makes and models of atomic absorption spectrophotometers prevent formulation of detailed instructions applicable to every instrument, so the analyst should follow the manufacturer's operating instructions for the particular instrument.

1. Set up the instrument by turning on the light source, setting the wavelength, aligning the light source for maximum response, moving the burner up into the beam and visually aligning it.
2 Lower the burner, and ignite the flame
3. Allow the instrument to warm up 15 min to minimize the effect of wave-length shifts due to grating expansion.
4 Reset the wavelength.
5. Optimize the nebulization rate by aspirating a high standard (less than 0 2 absorbance unit response) and adjusting the nebulization rate for maximum response.
6. Determine the detection limits by the baseline noise of the atomic absorption light source. With the flame on and the instrumental conditions optimized, use a scale expansion so that the baseline noise is ±1% of full-scale response. (Scale expansion may be achieved by using the instrument scale expansion functions or by monitoring the AA output with a recorder set on a full-scale response less than the nominal 10 mv.)
7. Reaspirate the high standard and adjust the burner position for maximum response; the atomic absorption instrument should be ready for operation.
8. Prepare a full calibration curve every 20 samples and analyze one standard every 10 samples.
9. When an analytical run is complete, draw a baseline for all samples; measure the peak heights of the standards and samples; and record them on the data form (Figure 4-5).

Calculations—Prepare a calibration curve by plotting peak heights of processed standards against their concentrations, and compute the concentrations of samples by comparing sample peak heights with those on the standard curve, or calculate sample data from the linear least squares fit parameters of the bracketing calibration standards. (Equations for the fit are in most elementary statistics books (e g., see Reference 9).)

The linear least squares fit yields the following parameters: slope (m), intercept (b), error of fit (e), and the correlation coefficient (r) The slope and intercept define a relationship between concentration standards (x_i) and the predicted instrument response (Y_i),

$$Y_i = mx_i + b. \qquad 4\text{-}14$$

This equation is preferred for fitting where major components of random variance are assumed to be in instrument response. A simple rearrangement of this equation yields the concentration (x_j) corresponding to an instrumental response (Y_j) for a sample j,

$$x_j = (Y_j - b)/m. \qquad 4\text{-}15$$

Concentrations obtained must be corrected for the dilution made to stabilize the sample.

Troubleshooting - Lack of sensitivity may be due to non-optimized instrumental conditions (wavelength, slit width, lamp or burner alignment, aspiration rate, or scale expansion). Occasionally, loss of sensitivity may be due to a clogging of the nebulizer with particulates; the nebulizer should be cleaned with a thin wire, according to the manufacturer's instructions. A change in sensitivity may be due to insufficiently warming up the instrument, clogged aspirator or an acetylene cylinder containing less than 100 psi of acetylene.

Excessive baseline noise may result from non-optimized instrumental conditions or from degradation of a light source which should be replaced.

Nonlinearity of response may result from improperly prepared standards, incorrect instrumental conditions, or nonlinear recorder response. Linearity of the recorder response should be checked with a constant voltage source (2, 4, 6, 8, and 10 mv).

4.9.1.6 Quality Control—

Minimum Requirements

1. All quality control data should be available for easy reference or inspection.
2. An unknown performance sample (when available) should be analyzed twice a year for the metals measured.

Minimum Daily Control

1. A calibration curve constructed from a minimum of a reagent blank and six standards should be prepared daily
2. If 20 or more samples per day are analyzed, a working standard curve must be run every 20 samples; a single standard should be analyzed after the first 10 samples, and checks must be within ±10% of the original curve
3. An analyst spike (Section 7.6.4.1, QA manual (6)), prepared by the analyst from a stock solution different than that used to prepare the calibration standards, should be analyzed every 20 samples and plotted real-time, (Section 7.6.5.1, QA manual (6)).
4. If calculations are performed with the aid of the linear least squares equation, the correlation coefficient of the first curve should be evaluated before continuing with the analysis. Experience has shown that it should be 0.9995 or greater for Na^+, K^+, Ca^{++} and Mg^{++}; however, the value obtained in practice should be compared to that obtained in the instrument performance study (Section 7.5.3, QA manual (6)). If a value is lower than the one observed before, it is probably due to poorly prepared standards.
5. Periodically, old samples, duplicates, and reagent blanks should be run (Section 7.6.6, QA manual (6)).
6. When preparing a new stock solution, prepare dilute calibration standards from the old and the new stock; analyze the old and the new standards; compare the calibration curves; complete the Standard Preparation form (Section 4.10).

Optional Requirements

1. A service contract should be in effect on balances and on the atomic absorption spectrophotometer
2. Class-S weights should be available for periodic checks on balances.
3. Chemicals should be dated upon receipt, and replaced as needed or before shelf-life has been exceeded.
4. A reference sample (if available) should be analyzed once a quarter for the metals measured.
5. At least one duplicate sample should be run either with every 10 samples or with each set of samples to verify precision.
6. Standard deviations should be documented for all measurements.
7. Quality control charts or a tabulation of mean and standard deviation should be used to document data validity daily.

4.9.2 *Calcium Determination*

4.9.2.1 Scope and Application—The response and range are:

Optimum concentration range: 0.2 to 1 mg/l at 422.7 nm

Sensitivity· 0.08 mg/l

Detection limit: 0.01 mg/l

Instrument's parameters (general) are:

1. Calcium hollow-cathode lamp
2. Fuel: acetylene
3. Oxidant: air
4. Type of flame: reducing

For sample preparation, handling, and preservation, see Section 4.9.1.1

4.9.2.2 Reagents—

1. *Stock Solution* - Suspend 1.250 g of $CaCO_3$ (analytical reagent grade), dried at 180°C for 1 h before weighing, in deionized water, and cautiously dissolve with a minimum of dilute HNO_3; dilute to 1000 ml with deionized distilled water (1 ml = 0.5 mg Ca or 500 mg/l). A commercially available stock solution may be used.
2. *Nitric Acid-Lanthanum Nitrate Solution* - Dissolve 77.93 g $La(NO_3)_3 \cdot 6H_2O$ in 25 ml conc. HNO_3, and dilute to 500 ml with deionized distilled water (to yield 5% HNO_3 - 0.5% La).
3. *Calibration Standards* - Prepare dilutions to be used as calibration standards at the time of analysis. To each 100-ml volumetric flask used for calibration standards or samples, add 20 ml of the 5% HNO_3 - 0.5% La solution before diluting to the mark; use a proportionally smaller amount for smaller volumes.

4.9.2.3 Analysis Procedure—For analysis procedure and calculations, see Section 4.9 1.5, and follow notes 1 - 4.

1. PO_4^{-3}, $SO_4^{=}$, and Al^{+3} interfere, but are masked by the addition of lanthanum. Since low calcium values result if the pH of the sample is above 7, both standards and samples are prepared in dilute HNO_3. Concentrations of Mg^{++} greater than 1000 mg/l also cause low calcium values. Concentrations of up to 500 mg/l each of Na^+, K^+, and NO_3^- do not cause interference.
2. Anionic chemical interferences can be expected if lanthanum is not used in samples and standards.
3. The 239.9-nm line may also be used. This line has a relative sensitivity of 120.

4.9.3 *Magnesium Determination*

4.9.3.1 Scope and Application—The response and range are
Optimum concentration range: 0.02 to 0 6 mg/l at 285.2 nm
Sensitivity: 0.007 mg/l
Detection limit. .01 mg/l
Instrument's parameters (general) are·

1. Magnesium hollow-cathode lamp
2. Fuel: acetylene
3. Oxidant air
4. Type of flame: oxidizing

For sample preparation, handling, and preservation, see Section 4.9 1 1.

4.9.3.2 Reagents—

1. *Stock Solution* - Dissolve 0.829 g MgO (analytical reagent grade) in 10 ml of redistilled HNO_3, and dilute to 1 liter with deionized water (1 ml = 0.50 mg of Mg or (500 mg/l) A commercially available stock solution may be used.
2. *Nitric Acid-Lanthanum Nitrate Solution* - Dissolve 77.93 g $La(NO_3)_3 \cdot 6H_2O$ in 25 ml conc. HNO_3, and dilute to 500 ml with deionized water (5% HNO_3 - 0.5% La).
3. *Calibration Standards* - To each 100 ml volumetric flask used for calibration standards, add 20 ml of the 5% HNO_3 - 0.5% La solution; use a proportionally smaller amount for smaller volumes. Then add appropriate volume of stock solution and dilute to volume with deionized water.

4.9.3.3 Analysis Procedure—For the analysis procedure and the calculation, see Section 4.9.1.5, and follow notes 1 - 2.

1 Interference caused by Al^{+++} concentrations greater than 2 mg/l is masked by addition of lanthanum. Na^+, K^+, and Ca^{++} cause no interference at concentrations less than 400 mg/l
2. 202 5 nm with relative sensitivity of 25 may also be used.

4.9.4 *Potassium Determination*

4.9.4.1 Scope and Application—
Optimum concentration range. 0.1 to 1 mg/l at 766.5 nm
Sensitivity: 0.04 mg/l
Detection limit 0.03 mg/l
The instrumental parameters (general) are:

1. Potassium hollow-cathode lamp
2. Fuel: acetylene
3. Oxidant: air
4. Type of flame: slightly oxidizing

For sample handling and preservation, see Section 4.9.1.1.

4.9.4.2 Reagents—

1 *Stock Solution* - Dissolve 0.1907 g of KCl (analytical reagent grade), dried at 110°C, in deionized water, and dilute to 1 liter (1 ml = 0.10 mg K or 100 mg/l). A commercially available stock solution may be used.
2 *Nitric Acid-Lanthanum Nitrate Solution* - Dissolve 77 93 g $La(NO_3)_3 \cdot 6H_2O$ in 25 ml conc. HNO_3, and dilute to 500 ml with deionized water (5% HNO_3 - 0.5% La)
3. *Calibration Standards* - To each 100 ml volumetric flask used for calibration standards, add 10 ml of the 5% HNO_3 - 0 5% La solution; use a proportionally smaller amount for smaller volumes. Then add an appropriate volume of stock solution and dilute to volume with deionized water.

4.9.4.3 Procedure—For the analysis procedure and the calculations, see Section 4 9.1 1.

4.9.5 *Sodium Determination*

4.9.5.1 Scope and Application—The response and range are:
Optimum concentration range: 0.03 to 1 mg/l at 589.6 nm
Sensitivity: 0.015 mg/l
Detection limit· 0.03 mg/l
The instrumental parameter (general) are

1 Sodium hollow-cathode lamp
2. Fuel: acetylene
3. Oxidant: air
4. Type of flame· oxidizing

For sample handling and preservation, see Section 4.9.1 1.

4.9.5.2 Reagents—

1. *Stock Solution* - Dissolve 2.542 g of NaCl (analytical reagent grade), dried at 140°C, in deionized distilled water, and dilute to 1 liter (1 ml = 1 mg Na or 1000 mg/l). A commercially available stock solution may be used
2. *Nitric Acid-Lanthanum Nitrate Solution* - Dissolve 77.93 g $La(NO_3)_3 \cdot 6H_2O$ in 25 ml conc. HNO_3, and dilute to 500 ml with deionized water (5% HNO_3 - 0.5% La). To each 100-ml volumetric flask used for calibration standards, add 20 ml of the 5% HNO_3-0.5% La solution before diluting to the mark; use a proportionally smaller amount for sample volumes. Then add an appropriate volume of stock solution and dilute to volume with deionized water.

4.9.5.3 Procedure—For the analysis procedure and the calculations, see Section 4.9.1.1 and follow notes 1 and 2.

1 The 330 2-nm resonance line of Na^+, which has a relative sensitivity of 185, provides a convenient way to avoid the need to dilute more concentrated Na^+ solutions
2 Low-temperature flames increase the sensitivity by reducing the extent of ionization of this easily ionized metal. Ionization may also be controlled by adding K (1000 mg/l) to both standards and samples.

4.10 Report Forms

Blank data forms are included in this section for the convenience of the manual user. Use of these are discussed throughout Section 4. To correlate the forms to the test being documented, a number is in the lower right-hand corner of each form (e g., 1 1/4.4 indicates form 1, version 1, discussed in 4.4 The forms included are listed below

Form Number	*Title*
1.1/4.2 2	Certification of Working Weights to NBS Forms
2.1/4.4 1 7.2	Gran Strong Acid Data Form
3.1/4 0	Standard Preparation Form
4.1/4.7 10.4	Dionex Resolution Test

4.11 References

1. Peden, M.E., L.M. Skowron, F F. McGurk, "Precipitation Sample Handling, Analysis, and Storage Procedures". US DOE, Pollutant Characterization and Safety Research Division, Contract EY-76-S-02-1199, Research Report 4, C00-1199-57 (1979); Peden, M.E. and L.M Skowron, "Ionic Stability of Precipitation Samples", Atmos. Environ. *12*, 2343 (1978).
2. *Standard Methods for the Examination of Water and Wastewater,* 14th Ed, p. 460, 71, (1975).
3 *Annual Book of ASTM Standards,* Part 31, Water Standard D1293-65, p. 178 (1976).
4. Galloway, J.N., B.J. Cosby, and G.E. Likens, J. Limnol. Oceanogr. *24,* 1161 (1979).
5 National Bureau of Standards, Special Publication 250.
6. *Quality Assurance Manual for Precipitation Measurement Systems,* US EPA, Research Triangle Park, NC, EPA-Draft.
7. Gran, G., Analyst *77,* 661 (1952).
8. Liljestrand, H.M. and J.J. Morgan, Environ. Sci. and Technol., *12,* 1271 (1978).

9. *An Introduction to Mathematical Statistics,* H.D. Brunk, Blaisdell Publishing Co., Waltham, MA 1976, p. 210.
10. *Methods for Chemical Analysis of Water and Wastes,* March 1979, EPA-600-4-79-020, Method 350.1.
11. A wetting agent recommended and supplied by the Technicon Corporation for use in Auto Analyzers.
12. *Methods for Chemical Analysis of Water and Wastes,* March 1979, EPA-4-79-020, Method 365.1.
13. Lipski, Allan, Personal Communication, Barringer Magenta Ltd., Rexdale, Ontario, Canada
14. Shepard, L.S., R.J. Schwall and G. Colovos, "Ion Chromatographic Analysis Using an Automated Ion Chromatograph," presented at a Dionex Symposium in Sunnyvale, CA, 21 June 1978.
15. *Methods for Chemical Analysis of Water and Wastes,* March 1979, EPA-600-4-79-020, Methods 215.1, 242.1, 258 1, Atomic Absorption Methods.

Certification of Working Weights to NBS Form

Date of Certification: _____

Weight Set Serial #: _____

_____
(Analyst Signature)

Balance 0	_____	*Balance 0*	_____
NBS 1kg	_____	*NBS 1kg*	_____
NBS 5kg	_____	*NBS 5kg*	_____
Test 1kg	_____	*Test 1kg*	_____
Test 5kg	_____ ***	*Test 5kg*	_____ ***
Balance 0	_____	*Balance 0*	_____
NBS 1kg	_____	*NBS 1kg*	_____
NBS 5kg	_____	*NBS 5kg*	_____
Test 1kg	_____	*Test 1kg*	_____
Test 5kg	_____ ***	*Test 5kg*	_____ ***
Balance 0	_____	*Balance 0*	_____
NBS 1kg	_____	*NBS 1kg*	_____
NBS 5kg	_____	*NBS 5kg*	_____
Test 1kg	_____	*Test 1kg*	_____
Test 5kg	_____	*Test 5kg*	_____

Summary:

	Average ± Standard Deviation
Balance 0	_____
NBS 1kg	_____
NBS 5kg	_____
Test 1kg	_____
Test 5kg	_____

Gran Strong Acid Data Sheet

Sample # Initial mv Temp. °C	*µl NaOH Injected*	*mv reading*		*Sample # Initial mv Temp. °C*	*µl NaOH Injected*	*mv reading*			
							Date:		
							Conc NaOH _____ *N*		
							Micropipette Calibration		
							5 µl = _____ *µl*		
							Total volume _____		

Standard Preparation Form

Species _____

Date _____

_____
(Analyst Signature)

Species	*Species Molecular Weight*	*Salt Formula*	*Salt Molecular Weight*	*Gross Weight (grams)*	*Tare Weight (grams)*	*Weight Taken (grams)*	*Final Dilution Vol. (ml)*	*Expected Conc. (µg/ml)*

Comparsion to Old Standard: *Prepare new dilute calibration standards from the above stock solution and run the old calibration standards against the new. This should be done by analyzing the old and the new standards successively at each concentration level. Calculate the linear least squares fit of the old and the new calibration standards*

	Old Standard	New Standard
Slope (m)	_____	_____
Intercept (b)	_____	_____
Correl. Coef.	_____	_____
Error	_____	_____
Detection Limit	_____	_____

Date of Preparation of Old Stock Solution _____

Date of Preparation of Old Stock Dilute Standards _____

Slope Difference[a]*(%):* $\left(\frac{M_n - M_o}{M_o}\right) x\ 100 =$ _____

Intercept Difference (µg/ml): $b_n - b_o =$ _____

[a] *n = new standard, o = old standard, M = linear least squares fit slope,* [b] *= linear least squares fit intercept.*

Operations & Maintenance Manual for Precipitation Measurement Systems - 3.1/4.0

Dionex Resolution Test

Date _____

Concentration. *Br* _____ *μg/ml,* NO_3 _____ *μg/ml*

Column Back Pressure (at max. of stroke) : _____ *psi*

Flow rate: _____ *ml/min*

Column Serial #: _____ *; Date of purchase:* _____

Is precolumn in system? _____ *Yes* _____ *No*

(a) _____ *cm* *(b)* _____ *cm (see Figure below)*

Percentage Resolution: 100 x (1-a/b) _____

*Test Chromatogram:**

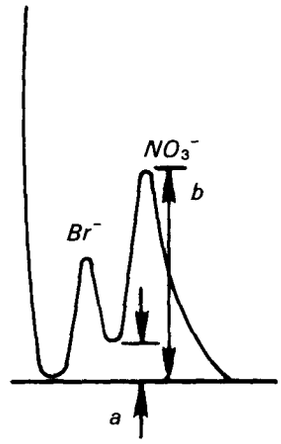

FIGURE

**Cut out test chromatogram and attach to this form.*

* U.S. GOVERNMENT PRINTING OFFICE 1983-659-095/0731