United States
Environmental Protection
Agency

Environmental Monitoring Systems
Laboratory
Research Triangle Park NC 27711

EPA-600/4-84-041
Apr 1984

Research and Development

EPA

Compendium of Methods for the Determination of Toxic Organic Compounds in Ambient Air

EPA-600/4-84-041
April 1984

COMPENDIUM OF METHODS FOR THE DETERMINATION OF TOXIC ORGANIC COMPOUNDS IN AMBIENT AIR

by

R. M. Riggin
Battelle-Columbus Laboratories
505 King Avenue
Columbus, Ohio 43201

Contract No. 68-02-3745 (WA-9)

EPA Project Officer:
L. J. Purdue
Quality Assurance Division
Environmental Monitoring Systems Laboratory
U.S. Environmental Protection Agency
Research Triangle Park, North Carolina 27711

ENVIRONMENTAL MONITORING SYSTEM LABORATORY
OFFICE OF RESEARCH AND DEVELOPMENT
U.S. ENVIRONMENTAL PROTECTION AGENCY
RESEARCH TRIANGLE PARK, NORTH CAROLINA 27711

Disclaimer

This report has been reviewed by the Environmental Monitoring Systems Laboratory, U. S. Environmental Protection Agency, and approved for publication. Mention of trade names or commercial products does not constitute endorsement or recommendation for use.

CONTENTS

	Page
FOREWARD	iv
INTRODUCTION	v
METHODS	
Tenax GC Adsorption	Method TO-1
Carbon Molecular Sieve Adsorption	Method TO-2
Cryogenic Trapping	Method TO-3
High Volume Polyurethane Foam Sampling	Method TO-4
Dinitrophenylhydrazine Liquid Impinger Sampling	Method TO-5
APPENDIX A - EPA Method	

FOREWARD

Measurement and monitoring research efforts are designed to anticipate potential environmental problems, to support regulatory actions by developing an in-depth understanding of the nature and processes that impact health and the ecology, to provide innovative means of monitoring compliance with regulations, and to evaluate the effectiveness of health and environmental protection efforts through the monitoring of long-term trends. The Environmental Monitoring Systems Laboratory Research Triangle Park, North Carolina, has responsibility for: assessment of environmental monitoring technology and systems; implementation of Agency-wide quality assurance programs for air pollution measurement systems; and supplying technical support to other groups in the Agency, including the Office of Air and Radiation, the Office of Toxic Substances, and the Office of Enforcement.

Determination of toxic organic compounds in ambient air is a complex task, primarily because of the wide variety of compounds of interest and the lack of standardized sampling and analysis procedures. This methods compendium has been prepared to provide a standardized format for such analytical procedures. A core set of five methods is presented in the current document. Addition of specific methods to the compendium will occur as suitable methods become available. Additionally, the current methods may be modified from time to time as advancements are made.

Thomas R. Hauser, Ph.D.
Director
Environmental Monitoring Systems Laboratory
Research Triangle Park, North Carolina

INTRODUCTION

This Methods Compendium has been prepared to provide regional, state, and local environmental regulatory agencies, as well as other interested parties, with specific guidance on the determination of selected toxic organic compounds in ambient air. Recently, a Technical Assistance Document (TAD) was published which provided guidance to such persons (1). Based on the comments received concerning the TAD the decision was made to begin preparation of a Methods Compendium which would provide specific sampling and analysis procedures, in a standardized format, for selected toxic organic compounds.

The current Methods Compendium consists of five procedures which are considered to be of primary importance in current toxic organic monitoring efforts. Additional methods will be placed in the compendium from time to time, as such methods become available. The current methods were selected to cover as many compounds as possible (i.e. multiple analyte methods were selected). Future methods are expected to be targeted towards specific compounds, or small groups of compounds which, for various technical reasons, cannot be determined by the more general methods.

Each of the methods writeups is self contained (including pertinent literature citations) and can be used independent of the remaining portions of the Methods Compendium. To the extent possible the American Society for Testing and Materials (ASTM) standardized format has been used, since most potential users are familiar with that format. Each method has been identified with a revision number and date, since modifications to the methods may be required in the future.

Nearly all the methods writeups have some flexibility in the procedure. Consequently, it is the user's responsibility to prepare certain standard operating procedures (SOPs) to be employed in that particular laboratory. Each method indicates those operations for which SOPs are required.

Table 1 summarizes the methods currently in the compendium. As shown in Table 1 the first three methods are directed toward volatile nonpolar compounds. The user should review the procedures as well as the background material provided in the TAD (1) before deciding which of these methods best meets the requirements of the specific task.

Table 2 presents a partial listing of toxic organic compounds which can be determined using the current set of methods in the compendium. Additional compounds may be determined by these methods, but the user must carefully evaluate the applicability of the method before use.

Reference

1. Riggin, R. M., "Technical Assistance Document for Sampling and Analysis of Toxic Organic Compounds in Ambient Air", EPA-600/4-83-027, U. S. Environmental Protection Agency, Research Triangle Park, North Carolina, 1983.

TABLE 1. LIST OF METHODS IN THE COMPENDIUM

Method Number	Description	Types of Compounds Determined
TO-1	Tenax GC Adsorption and GC/MS Analysis	Volatile, nonpolar organics (e.g. aromatic hydrocarbons, chlorinated hydrocarbons) having boiling points in the range of 80 to 200°C.
TO-2	Carbon Molecular Sieve Adsorption and GC/MS Analysis	Highly volatile, nonpolar organics (e.g. vinyl chloride, vinylidene chloride, benzene, toluene) having boiling points in the range of -15 to + 120°C.
TO-3	Cryogenic Trapping and GC/FID or ECD Analysis.	Volatile, nonpolar organics having boiling points in the range of -10 to + 200°C.
TO-4	High volume PUF Sampling and GC/ECD Analysis.	Organochlorine pesticides and PCBs
TO-5	Dinitrophenylhydrazine Liquid Impinger Sampling and HPLC/UV Analysis.	Aldehydes and Ketones

TABLE 2. LIST OF COMPOUNDS OF PRIMARY INTEREST

Compound	Applicable Method(s)	Comments
Acetaldehyde	TO-5	
Acrolein	TO-5	
Acrylonitrile	TO-2, TO-3	TO-3 yields better recovery data than TO-2.
Allyl Chloride	TO-2, TO-3	TO-3 yields better recovery data than TO-2.
Benzaldehyde	TO-5	
Benzene	TO-1, TO-2, TO-3	TO-3 yields best recovery data.
Benzyl Chloride	TO-1, TO-3	
Carbon Tetrachloride	(TO-1?) TO-2, TO-3	Breakthrough volume is very low using TO-1.
Chlorobenzene	TO-1, TO-3	
Chloroform	(TO-1?) TO-2, TO-3	Breakthrough volume is very low using TO-1.
Chloroprene (2-Chloro-1,3-butadiene)	TO-1, TO-3	The applicability of these methods for chloroprene has not been documented.
4,4'-DDE	TO-4	
4,4'-DDT	TO-4	
1,4-Dichlorobenzene	TO-1, TO-3	
Ethylene dichloride (1,2-Dichloroethane)	(TO-1?) TO-2, TO-3	Breakthrough volume very low using TO-1.
Formaldehyde	TO-5	
Methyl Chloroform (1,1,1-Trichloroethane)	(TO-1?) TO-2, TO-3	Breakthrough volume very low using TO-1.
Methylene chloride	TO-2, TO-3	
Nitrobenzene	TO-1, TO-3	
Perchloroethylene (Tetrachloroethylene)	TO-1, (TO-2?), TO-3	TO-2 performance has not been documented for this compound.
Polychlorinated biphenyls (PCBs)	TO-4	
Propanal	TO-5	
Toluene	TO-1, TO-2, TO-3	

TABLE 2. (Continued)

Compound	Applicable Method(s)	Comments
Trichloroethylene	TO-1, TO-2, TO-3	
Vinyl Chloride	TO-2, TO-3	
Vinylidine Chloride (1,1-dichloroethene)	TO-2, TO-3	
o,m,p-Xylene	TO-1, TO-3	

METHOD FOR THE DETERMINATION OF VOLATILE ORGANIC COMPOUNDS IN AMBIENT AIR USING TENAX® ADSORPTION AND GAS CHROMATOGRAPHY/MASS SPECTROMETRY (GC/MS)

1. Scope

1.1 The document describes a generalized protocol for collection and determination of certain volatile organic compounds which can be captured on Tenax® GC (poly(2,6-Diphenyl phenylene oxide)) and determined by thermal desorption GC/MS techniques. Specific approaches using these techniques are described in the literature (1-3).

1.2 This protocol is designed to allow some flexibility in order to accommodate procedures currently in use. However, such flexibility also results in placement of considerable responsibility with the user to document that such procedures give acceptable results (i.e. documentation of method performance within each laboratory situation is required). Types of documentation required are described elsewhere in this method.

1.3 Compounds which can be determined by this method are nonpolar organics having boiling points in the range of approximately 80° - 200°C. However, not all compounds falling into this category can be determined. Table 1 gives a listing of compounds for which the method has been used. Other compounds may yield satisfactory results but validation by the individual user is required.

2. Applicable Documents

2.1 ASTM Standards:

D1356 Definitions of Terms Related to Atmospheric Sampling and Analysis.

E355 Recommended Practice for Gas Chromatography Terms and Relationships.

2.3 Other documents:

Existing procedures (1-3).
U.S. EPA Technical Assistance Document (4).

3. Summary of Protocol

3.1 Ambient air is drawn through a cartridge containing ∿1-2 grams of Tenax and certain volatile organic compounds are trapped on the resin while highly volatile organic compounds and most inorganic atmospheric constituents pass through the cartridge. The cartridge is then transferred to the laboratory and analyzed.

3.2 For analysis the cartridge is placed in a heated chamber and purged with an inert gas. The inert gas transfers the volatile organic compounds from the cartridge onto a cold trap and subsequently onto the front of the GC column which is held at low temperature (e.g. - 70°C). The GC column temperature is then increased (temperature programmed) and the components eluting from the column are identified and quantified by mass spectrometry. Component identification is normally accomplished, using a library search routine, on the basis of the GC retention time and mass spectral characteristics. Less sophistacated detectors (e.g. electron capture or flame ionization) may be used for certain applications but their suitability for a given application must be verified by the user.

3.3 Due to the complexity of ambient air samples only high resolution (i.e. capillary) GC techniques are considered to be acceptable in this protocol.

4. Significance

4.1 Volatile organic compounds are emitted into the atmosphere from a variety of sources including industrial and commercial facilities, hazardous waste storage facilities, etc. Many of these compounds are toxic; hence knowledge of the levels of

such materials in the ambient atmosphere is required in order to determine human health impacts.

4.2 Conventional air monitoring methods (e.g. for workspace monitoring) have relied on carbon adsorption approaches with subsequent solvent desorption. Such techniques allow subsequent injection of only a small portion, typically 1-5% of the sample onto the GC system. However, typical ambient air concentrations of these compounds require a more sensitive approach. The thermal desorption process, wherein the entire sample is introduced into the analytical (GC/MS) system fulfills this need for enhanced sensitivity.

5. Definitions

Definitions used in this document and any user prepared SOPs should be consistent with ASTM D1356(6). All abbreviations and symbols are defined with this document at the point of use.

6. INTERFERENCES

6.1 Only compounds having a similar mass spectrum and GC retention time compared to the compound of interest will interfere in the method. The most commonly encountered interferences are structural isomers.

6.2 Contamination of the Tenax cartridge with the compound(s) of interest is a commonly encountered problem in the method. The user must be extremely careful in the preparation, storage, and handling of the cartridges throughout the entire sampling and analysis process to minimize this problem.

7. Apparatus

7.1 Gas Chromatograph/Mass Spectrometry system - should be capable of subambient temperature programming. Unit mass resolution or better up to 800 amu. Capable of scanning 30-440 amu region every 0.5-1 second. Equipped with data system for instrument control as well as data acquisition, processing and storage.

7.2 Thermal Desorption Unit - Designed to accommodate Tenax cartridges in use. See Figure 2a or b.

7.3 Sampling System - Capable of accurately and precisely drawing an air flow of 10-500 ml/minute through the Tenax cartridge. (See Figure 3a or b.)

7.4 Vacuum oven - connected to water aspirator vacuum supply.

7.5 Stopwatch

7.6 Pyrex disks - for drying Tenax.

7.7 Glass jar - Capped with Teflon-lined screw cap. For storage of purified Tenax.

7.8 Powder funnel - for delivery of Tenax into cartridges.

7.9 Culture tubes - to hold individual glass Tenax cartridges.

7.10 Friction top can (paint can) - to hold clean Tenax cartridges.

7.11 Filter holder - stainless steel or aluminum (to accommodate 1 inch diameter filter). Other sizes may be used if desired. (optional)

7.12 Thermometer - to record ambient temperature.

7.13 Barometer (optional).

7.14 Dilution bottle - Two-liter with septum cap for standards preparation.

7.15 Teflon stirbar - 1 inch long.

7.16 Gas-tight glass syringes with stainless steel needles - 10-500 µl for standard injection onto GC/MS system.

7.17 Liquid microliter syringes - 5-50 µL for injecting neat liquid standards into dilution bottle.

7.18 Oven - 60 ± 5°C for equilibrating dilution flasks.

7.19 Magnetic stirrer.

7.20 Heating mantel.

7.21 Variac

7.22 Soxhlet extraction apparatus and glass thimbles - for purifying Tenax.

7.23 Infrared lamp - for drying Tenax.

7.24 GC column - SE-30 or alternative coating, glass capillary or fused silica.

7.25 Psychrometer - to determine ambient relative humidity. (optional).

8. Reagents and Materials

8.1 Empty Tenax cartridges - glass or stainless steel (See Figure 1a or b).
8.2 Tenax 60/80 mesh (2,6-diphenylphenylene oxide polymer).
8.3 Glasswool - silanized.
8.4 Acetone - Pesticide quality or equivalent.
8.5 Methanol - Pesticide quality, or equivalent.
8.6 Pentane - Pesticide quality or equivalent.
8.7 Helium - Ultra pure, compressed gas. (99.9999%)
8.8 Nitrogen - Ultra pure, compressed gas. (99.9999%)
8.9 Liquid nitrogen.
8.10 Polyester gloves - for handling glass Tenax cartridges.
8.11 Glass Fiber Filter - one inch diameter, to fit in filter holder. (optional)
8.12 Perfluorotributylamine (FC-43).
8.13 Chemical Standards - Neat compounds of interest. Highest purity available.
8.14 Granular activated charcoal - for preventing contamination of Tenax cartridges during storage.

9. Cartridge Construction and Preparation

9.1 Cartridge Design

9.1.1 Several cartridge designs have been reported in the literature (1-3). The most common (1) is shown in Figure 1a. This design minimizes contact of the sample with metal surfaces, which can lead to decomposition in certain cases. However, a disadvantage of this design is the need to rigorously avoid contamination of the <u>outside</u> portion of the cartridge since the entire surface is subjected to the purge gas stream during the desorption porcess.

Clean polyester gloves must be worn at all times when handling such cartridges and exposure of the open cartridge to ambient air must be minimized.

9.1.2 A second common type of design (3) is shown in Figure 1b. While this design uses a metal (stainless steel) construction, it eliminates the need to avoid direct contact with the exterior surface since only the interior of the cartridge is purged.

9.1.3 The thermal desorption module and sampling system must be selected to be compatible with the particular cartridge design chosen. Typical module designs are shown in Figures 2a and b. These designs are suitable for the cartridge designs shown in Figures 1a and 1b, respectively.

9.2 Tenax Purification

9.2.1 Prior to use the Tenax resin is subjected to a series of solvent extraction and thermal treatment steps. The operation should be conducted in an area where levels of volatile organic compounds (other than the extraction solvents used) are minimized.

9.2.2 All glassware used in Tenax purification as well as cartridge materials should be thoroughly cleaned by water rinsing followed by an acetone rinse and dried in an oven at 250°C.

9.2.3 Bulk Tenax is placed in a glass extraction thimble and held in place with a plug of clean glasswool. The resin is then placed in the soxhlet extraction apparatus and extracted sequentially with methanol and then pentane for 16-24 hours (each solvent) at approximately 6 cycles/hour. Glasswool for cartidge preparation should be cleaned in the same manner as Tenax.

9.2.4 The extracted Tenax is immediately placed in an open glass dish and heated under an infrared lamp for two

hours in a hood. Care must be exercised to avoid over heating of the Tenax by the infrared lamp. The Tenax is then placed in a vacuum oven (evacuated using a water aspirator) without heating for one hour. An inert gas (helium or nitrogen) purge of 2-3 ml/minute is used to aid in the removal of solvent vapors. The oven temperature is then increased to 110°C, maintaining inert gas flow and held for one hour. The oven temperature control is then shut off and the oven is allowed to cool to room temperature. Prior to opening the oven, the oven is slightly pressurized with nitrogen to prevent contamination with ambient air. The Tenax is removed from the oven and sieved through a 40/60 mesh sieve (acetone rinsed and oven dried) into a clean glass vessel. If the Tenax is not to be used immediately for cartridge preparation it should be stored in a clean glass jar having a Teflon-lined screw cap and placed in a desiccator.

9.3 Cartridge Preparation and Pretreatment

9.3.1 All cartridge materials are pre-cleaned as described in Section 9.2.2. If the glass cartridge design shown in Figure 1a is employed all handling should be conducted wearing polyester gloves.

9.3.2 The cartridge is packed by placing a 0.5-1cm glass-wool plug in the base of the cartridge and then filling the cartridge to within approximately 1 cm of the top. A 0.5-1cm glasswool plug is placed in the top of the cartridge.

9.3.3 The cartridges are then thermally conditioned by heating for four hours at 270°C under an inert gas (helium) purge (100 - 200 ml/min).

9.3.4 After the four hour heating period the cartridges are allowed to cool. Cartridges of the type shown in Figure 1a are immediately placed (without cooling) in clean culture tubes having Teflon-lined screw caps with a glasswool cushion at both the top and the bottom. Each tube should be shaken to ensure that the cartridge is held firmly in place. Cartridges of the type shown in Figure 1b are allowed to cool to room temperature under inert gas purge and are then closed with stainless steel plugs.

9.3.5 The cartridges are labeled and placed in a tightly sealed metal can (e.g. paint can or similar friction top container). For cartridges of the type shown in Figure 1a the culture tube, not the cartridge,is labeled.

9.3.6 Cartridges should be used for sampling within 2 weeks after preparation and analyzed within two weeks after sampling. If possible the cartridges should be stored at -20°C in a clean freezer (i.e. no solvent extracts or other sources of volatile organics contained in the freezer).

10. Sampling

10.1 Flow rate and Total Volume Selection

10.1.1 Each compound has a characteristic retention volume (liters of air per gram of adsorbent) which must not be exceeded. Since the retention volume is a function of temperature, and possibly other sampling variables, one must include an adequate margin of safety to ensure good collection efficiency. Some considerations and guidance in this regard are provided in a recent report (5). Approximate breakthrough volumes at 38°C (100°F) in liters/gram of Tenax are provided in Table 1. These retention volume data are supplied only as rough guidance and are subject to considerable variability, depending on cartridge design as well as sampling parameters and atmospheric conditions.

10.1.2 To calculate the maximum total volume of air which can be sampled use the following equation:

$$V_{MAX} = \frac{V_b x W}{1.5}$$

where

V_{MAX} is the calculated maximum total volume in liters.

V_b is the breakthrough volume for the least retained compound of interest (Table 1) in liters per gram of Tenax.

W is the weight of Tenax in the cartridge, in grams.

1.5 is a dimensionless safety factor to allow for variability in atmospheric conditions. This factor is appropriate for temperatures in the range of 25-30°C. If higher temperatures are encountered the factor should be increased (i.e. maximum total volume decreased).

10.1.3 To calculate maximum flow rate use the following equation:

$$Q_{MAX} = \frac{V_{MAX}}{t} \times 1000$$

where

Q_{MAX} is the calculated maximum flow rate in milli-leters per minute.

t is the desired sampling time in minutes. Times greater than 24 hours (1440 minutes) generally are unsuitable because the flow rate required is too low to be accurately maintained.

10.1.4 The maximum flow rate Q_{MAX} should yield a linear flow velocity of 50-500 cm/minute. Calculate the linear velocity corresponding to the maximum flow rate using the following equation:

$$B = \frac{Q_{MAX}}{\pi r^2}$$

where

B is the calculated linear flow velocity in centimeters per minute.

r is the internal radius of the cartridge in centimeters.

If B is greater than 500 centimeters per minute either the total sample volume (V_{MAX}) should be reduced or the sample flow rate (Q_{MAX}) should be reduced by increasing the collection time. If B is less than 50 centimeters per minute the sampling rate (Q_{MAX}) should be increased by reducing the sampling time. The total sample value (V_{MAX}) cannot be increased due to component breakthrough.

10.1.4 The flow rate calculated as described above defines the maximum flow rate allowed. In general, one should collect additional samples in parallel, for the same time period but at lower flow rates. This practice yields a measure of quality control and is further discussed in the literature (5). In general, flow rates 2 to 4 fold lower than the maximum flow rate should be employed for the parallel samples. In all cases a constant flow rate should be achieved for each cartridge since accurate integration of the analyte concentration requires that the flow be constant over the sampling period.

10.2 Sample Collection

10.2.1 Collection of an accurately known volume of air is critical to the accuracy of the results. For this reason the use of mass flow controllers, rather than conventional needle valves or orifices is highly recommended, especially at low flow velocities (e.g. less than 100 milliliters/minute). Figure 3a illustrates a sampling system utilizing mass flow controllers. This system readily allows for collection of parallel samples. Figures 3b shows a commercially available system based on needle valve flow controllers.

10.2.2 Prior to sample collection insure that the sampling flow rate has been calibrated over a range including the rate to be used for sampling, with a "dummy" Tenax cartridge in place. Generally calibration is accomplished using a soap bubble flow meter or calibrated wet test meter. The flow calibration device is connected to the flow exit, assuming the entire flow system is sealed. ASTM Method D3686 describes an appropriate calibration scheme, not requiring a sealed flow system downstream of the pump.

10.2.3 The flow rate should be checked before and after each sample collection. If the sampling interval exceeds four hours the flow rate should be checked at an intermediate point during sampling as well. In general, a rotameter should be included, as showed in Figure 3b, to allow observation of the sampling flow rate without disrupting the sampling process.

10.2.4 To collect an air sample the cartridges are removed from the sealed container just prior to initiation of the collection process. If glass cartridges (Figure 1a) are employed they must be handled only with polyester gloves and should not contact any other surfaces.

10.2.5 A particulate filter and holder are placed on the inlet to the cartridges and the exit end of the cartridge is connected to the sampling apparatus. In many sampling situations the use of a filter is not necessary if only the total concentration of a component is desired. Glass cartridges of the type shown in Figure 1a are connected using teflon ferrules and Swagelok (stainless steel or teflon) fittings. Start the pump and record the following parameters on an appropriate data sheet (Figure 4): data, sampling location, time, ambient temperature, barometric

pressure, relative humidity, dry gas meter reading (if applicable) flow rate, rotameter reading (if applicable), cartridge number and dry gas meter serial number.

10.2.6 Allow the sampler to operate for the desired time, periodically recording the variables listed above. Check flow rate at the midpoint of the sampling interval if longer than four hours.
At the end of the sampling period record the parameters listed in 10.2.5 and check the flow rate and record the value. If the flows at the beginning and end of the sampling period differ by more than 10% the cartridge should be marked as suspect.

10.2.7 Remove the cartridges (one at a time) and place in the original container (use gloves for glass cartridges). Seal the cartridges or culture tubes in the friction-top can containing a layer of charcoal and package for immediate shipment to the laboratory for analysis. Store cartridges at reduced temperature (e.g. - 20°C) before analysis if possible to maximize storage stability.

10.2.8 Calculate and record the average sample rate for each cartridge according to the following equation:

$$Q_A = \frac{Q_1 + Q_2 + \ldots Q_N}{N}$$

where

Q_A = Average flow rate in ml/minute.
$Q_1, Q_2, \ldots . Q_N$ = Flow rates determined at beginning, end, and immediate points during sampling.

N = Number of points averaged.

10.2.9 Calculate and record the total volumetric flow for each cartridge using the following equation:

$$V_m = \frac{T \times Q_A}{1000}$$

where

V_m = Total volume sampled in liters at measured temperature and pressure.

T_2 = Stop time.

T_1 = Start time.

T = Sampling time = $T_2 - T_1$, minutes

10.2.10 The total volume (V_s) at standard conditions, 25°C and 760 mmHg, is calculated from the following equation:

$$V_s = V_m \times \frac{P_A}{760} \times \frac{298}{273 + t_A}$$

where

P_A = Average barometric pressure, mmHg

t_A = Average ambient temperature, °C.

11. GC/MS Analysis

11.1 Instrument Set-up

11.1.1 Considerable variation from one laboratory to another is expected in terms of instrument configuration. Therefore each laboratory must be responsible for verifying that their particular system yields satisfactory results. Section 14 discusses specific performance criteria which should be met.

11.1.2 A block diagram of the typical GC/MS system required for analysis of Tenax cartridges is depicted in Figure 5. The operation of such devices is described in 11.2.4. The thermal desorption module must be designed to accommodate the particular cartridge configuration. Exposure of the sample to metal surfaces should be minimized and only stainless steel, or nickel metal surfaces should be employed.

The volume of tubing and fittings leading from the cartridge to the GC column must be minimized and all areas must be well-swept by helium carrier gas.

11.1.3 The GC column inlet should be capable of being cooled to -70°C and subsequently increased rapidly to approximately 30°C. This can be most readily accomplished using a GC equipped with subambient cooling capability (liquid nitrogen) although other approaches such as manually cooling the inlet of the column in liquid nitrogen may be acceptable.

11.1.4 The specific GC column and temperature program employed will be dependent on the specific compounds of interest. Appropriate conditions are described in the literature (1-3). In general a nonpolar stationary phase (e.g. SE-30, OV-1) temperature programmed from 30°C to 200°C at 8°/minute will be suitable. Fused silica bonded phase columns are preferable to glass columns since they are more rugged and can be inserted directly into the MS ion source, thereby eliminating the need for a GC/MS transfer line.

11.1.5 Capillary column dimensions of 0.3 mm ID and 50 meters long are generally appropriate although shorter lengths may be sufficient in many cases.

11.1.6 Prior to instrument calibration or sample analysis the GC/MS system is assembled as shown in Figure 5. Helium purge flows (through the cartridge) and carrier flow are set at approximately 10 ml/minute and 1-2 ml/minute respectively. If applicable, the injector sweep flow is set at 2-4 ml/minute.

11.1.7 Once the column and other system components are assembled and the various flows established the column temperature is increased to 250°C for approximately four hours (or overnight if desired) to condition the column.

11.1.8 The MS and data system are set according to the manufacturer's instructions. Electron impact ionization (70eV) and an electron multiplier gain of approximately 5 x 10^4 should be employed. Once the entire GC/MS system has been setup the system is calibrated as described in Section 11.2. The user should prepare a detailed standard operating procedure (SOP) describing this process for the particular instrument being used.

11.2 Instrument Calibration

11.2.1 Tuning and mass standarization of the MS system is performed according to manufacturer's instructions and relevant information from the user prepared SOP. Perfluorotributylamine should generally be employed for this purpose. The material is introduced directly into the ion source through a molecular leak. The instrumental parameters (e.g. lens voltages, resolution, etc.) should be adjusted to give the relative ion abundances shown in Table 2 as well as acceptable resolution and peak shape. If these approximate relative abundances cannot be achieved, the ion source may require cleaning according to manufacturer's instructions. In the event that the user's instrument cannot achieve these relative ion abundances, but is otherwise operating properly, the user may adopt another set of relative abundances as performance criteria.

However, these alternate values must be repeatable on a day-to-day basis.

11.2.2 After the mass standarization and tuning process has been completed and the appropriate values entered into the data system the user should then calibrate the entire system by introducing known quantities of the standard components of interest into the system. Three alternate procedures may be employed for the calibration process including 1) direct syringe injection of dilute vapor phase standards, prepared in a dilution bottle, onto the GC column, 2) Injection of dilute vapor phase standards into a carrier gas stream directed through the Tenax cartridge, and 3) introduction of permeation or diffusion tube standards onto a Tenax cartridge. The standards preparation procedures for each of these approaches are described in Section 13. The following paragraphs describe the instrument calibration process for each of these approaches.

11.2.3 If the instrument is to be calibrated by direct injection of a gaseous standard, a standard is prepared in a dilution bottle as described in Section 13.1. The GC column is cooled to -70°C (or, alternately, a portion of the column inlet is manually cooled with liquid nitrogen). The MS and data system is set up for acquisition as described in the relevant user SOP. The ionization filament should be turned off during the initial 2-3 minutes of the run to allow oxygen and other highly volatile components to elute. An appropriate volume (less than 1 ml) of the gaseous standard is injected onto the GC system using an accurately calibrated gas tight syringe.

The system clock is started and the column is maintained at -70°C (or liquid nitrogen inlet cooling) for 2 minutes. The column temperature is rapidly increased to the desired initial temperature (e.g. 30°C). The temperature program is started at a consistent time (e.g. four minutes) after injection. Simultaneously the ionization filament is turned on and data acquisition is initiated. After the last component of interest has eluted acquisiton is terminated and the data is processed as described in Section 11.2.5. The standard injection process is repeated using different standard volumes as desired.

11.2.4 If the system is to be calibrated by analysis of spiked Tenax cartridges a set of cartridges is prepared as described in Sections 13.2 or 13.3. Prior to analysis the cartridges are stored as described in Section 9.3. If glass cartridges (Figure 1a) are employed care must be taken to avoid direct contact, as described earlier. The GC column is cooled to -70°C, the collection loop is immersed in liquid nitrogen and the desorption module is maintained at 250°C. The inlet valve is placed in the desorb mode and the standard cartridge is placed in the desorption module, making certain that no leakage of purge gas occurs. The cartridge is purged for 10 minutes and then the inlet valve is placed in the inject mode and the liquid nitrogen source removed from the collection trap. The GC column is maintained at -70°C for two minutes and subsequent steps are as described in 11.2.3. After the process is complete the cartridge is removed from the desorption module and stored for subsequent use as described in Section 9.3.

11.2.5 Data processing for instrument calibration involves determining retention times, and integrated characteristic ion intensities for each of the compounds of interest. In addition, for at least one chromatographic run, the individual mass spectra should be inspected and compared to reference spectra to ensure proper instrumental performance. Since the steps involved in data processing are highly instrument specific, the user should prepare a SOP describing the process for individual use. Overall performance criteria for instrument calibration are provided in Section 14. If these criteria are not achieved the user should refine the instrumental parameters and/or operating procedures to meet these criteria.

11.3 Sample Analysis

11.3.1 The sample analysis process is identical to that described in Section 11.2.4 for the analysis of standard Tenax cartridges.

11.3.2 Data processing for sample data generally involves 1) qualitatively determining the presence or absence of each component of interest on the basis of a set of characteristic ions and the retention time using a reverse-search software routine, 2) quantification of each identified component by integrating the intensity of a characteristic ion and comparing the value to that of the calibration standard, and 3) tentative identification of other components observed using a forward (library) search software routine. As for other user specific processes, a SOP should be prepared describing the specific operations for each individual laboratory.

12. Calculations

12.1 Calibration Response Factors

12.1.1 Data from calibration standards is used to calculate a response factor for each component of interest. Ideally the process involves analysis of at least three calibration levels of each component during a given day and determination of the response factor (area/nanogram injected) from the linear least squares fit of a plot of nanograms injected versus area (for the characteristic ion). In general quantities of component greater than 1000 nanograms should not be injected because of column overloading and/or MS response nonlinearity.

12.1.2 In practice the daily routine may not always allow analysis of three such calibration standards. In this situation calibration data from consecutive days may be pooled to yield a response factor, provided that analysis of replicate standards of the same concentration are shown to agree within 20% on the consecutive days. One standard concentration, near the midpoint of the analytical range of interest, should be chosen for injection every day to determine day-to-day response reproducibility.

12.1.3 If substantial nonlinearity is present in the calibration curve a nonlinear least squares fit (e.g. quadratic) should be employed. This process involves fitting the data to the following equation:

$$Y = A + BX + CX^2$$

where

Y = peak area

X = quantity of component, nanograms

A,B, and C are coefficients in the equation

12.2 Analyte Concentrations

12.2.1 Analyte quantities on a sample cartridge are calculated from the following equation:

$$Y_A = A + BX_A + CX_A$$

where

Y_A is the area of the analyte characteristic ion for the sample cartridge.

X_A is the calculated quantity of analyte on the sample cartridge, in nanograms.

A,B, and C are the coefficients calculated from the calibration curve described in Section 12.1.3.

12.2.2 If instrumental response is essentially linear over the concentration range of interest a linear equation (C=0 in the equation above) can be employed.

12.2.3 Concentration of analyte in the original air sample is calculated from the following equation:

$$C_A = \frac{X_A}{V_S}$$

where

C_A is the calculated concentration of analyte in nanograms per liter.

V_S and X_A are as previously defined in Section 10.2.10 and 12.2.1, respectively.

13. Standard Preparation

13.1 Direct Injection

13.1.1 This process involves preparation of a dilution bottle containing the desired concentrations of compounds of interest for direct injection onto the GC/MS system.

13.1.2 Fifteen three-millimeter diameter glass beads and a one-inch Teflon stirbar are placed in a clean two-liter glass septum capped bottle and the exact volume is determined by weighing the bottle before and after filling with deionized water. The bottle is then rinsed with acetone and dried at 200°C.

13.1.3 The amount of each standard to be injected into the vessel is calculated from the desired injection quantity and volume using the following equation:

$$W_T = \frac{W_I}{V_I} \times V_B$$

where

W_T is the total quantity of analyte to be injected into the bottle in milligrams

W_I is the desired weight of analyte to be injected onto the GC/MS system or spiked cartridge in nanograms

V_I is the desired GC/MS or cartridge injection volume (should not exceed 500) in microliters.

V_B is total volume of dilution bottle determined in 13.1.1, in liters.

13.1.4 The volume of the neat standard to be injected into the dilution bottle is determined using the following equation:

$$V_T = \frac{W_T}{d}$$

where

V_T is the total volume of neat liquid to be injected in microliters.

d is the density of the neat standard in grams per milliliter.

13.1.6 The bottle is placed in a 60°C oven for at least 30 minutes prior to removal of a vapor phase standard.

13.1.7 To withdraw a standard for GC/MS injection the bottle is removed from the oven and stirred for 10-15 seconds. A suitable gas-tight microber syring warmed to 60°C, is inserted through the septum cap and pumped three times slowly. The appropriate volume of sample (approximately 25% larger than the desired injection volume) is drawn into the syringe and the volume is adjusted to the exact value desired and then immediately injected over a 5-10 seconds period onto the GC/MS system as described in Section 11.2.3.

13.2 Preparation of Spiked Cartridges by Vapor Phase Injection

13.2.1 This process involves preparation of a dilution bottle containing the desired concentrations of the compound(s) of interest as described in 13.1 and injecting the desired volume of vapor into a flowing inert gas stream directed through a clean Tenax cartridge.

13.2.2 A helium purge system is assembled wherein the helium flow 20-30 mL/minute is passed through a stainless steel Tee fitted with a septum injector. The clean Tenax cartridge is connected downstream of the tee using appropriate Swagelok fittings. Once the cartridge is placed in the flowing gas stream the appropriate volume vapor standard, in the dilution bottle, is injected through the septum as described in 13.1.6. The syringe is flushed several times by alternately filling the syringe with carrier gas and displacing the contents into the flow stream, without removing the syringe from the septum. Carrier flow is maintain through the cartridge for approximately 5 minutes after injection.

13.3 Preparation of Spiked Traps Using Permeation or Diffusion tubes

13.3.1 A flowing stream of inert gas containing known amounts of each compound of interest is generated according to ASTM Method D3609(6). Note that a method of accuracy maintaining temperature within ± 0.1°C is required and the system generally must be equilibrated for at least 48 hours before use.

13.3.2 An accurately known volume of the standard gas stream (usually 0.1-1 liter) is drawn through a clean Tenax cartridge using the sampling system described in Section 10.2.1, or a similar system. However, if mass flow controllers are employed they must be calibrated for the carrier gas used in Section 13.3.1 (usually nitrogen). Use of air as the carrier gas for permeation systems is not recommended, unless the compounds of interest are known to be highly stable in air.

13.3.3 The spiked cartridges are then stored or immediately analyzed as in Section 11.2.4.

14. Performance Criteria and Quality Assurance

This section summarizes quality assurance (QA) measures and provides guidance concerning performance criteria which should be achieved within each laboratory. In many cases the specific QA procedures have been described within the appropriate section describing the particular activity (e.g. parallel sampling).

14.1 Standard Opreating Procedures (SOPs)

14.1.1 Each user should generate SOPs describing the following activities as they are performed in their laboratory:

1) assembly, calibration, and operation of the sampling system,
2) preparation, handling and storage of Tenax cartridges,
3) assembly and operation of GC/MS system including the thermal desorption apparatus and data system, and
4) all aspects of data recording and processing.

14.1.2 SOPs should provide specific stepwise instructions and should be readily available to, and understood by the laboratory personnel conducting the work.

14.2 Tenax Cartridge Preparation

14.2.1 Each batch of Tenax cartridges prepared (as described in Section 9) should be checked for contamination by analyzing one cartridge immediately after preparation. While analysis can be accomplished by GC/MS, many laboratories may chose to use GC/FID due to logistical and cost considerations.

14.2.2 Analysis by GC/FID is accomplished as described for GC/MS (Section 11) except for use of FID detection.

14.2.3 While acceptance criteria can vary depending on the components of interest, at a minimum the clean cartridge should be demonstrated to contain less than one fourth of the minimum level of interest for each component. For most compounds the blank level should be less than 10 nanograms per cartridge in order to be acceptable. More rigid criteria may be adopted, if necessary, within a specific laboratory. If a cartridge does not meet these acceptance criteria the entire lot should be rejected.

14.3 Sample Collection

14.3.1 During each sampling event at least one clean cartridge will accompany the samples to the field and back to the laboratory, without being used for sampling, to serve as a field blank. The average amount of material found on the field blank cartridge may be subtracted from the amount found on the actual samples. However, if the blank level is greater than 25% of the sample amount, data for that component must be identified as suspect.

14.3.2 During each sampling event at least one set of parallel samples (two or more samples collected simultaneously) will be collected, preferably at different flow rates as described in Section 10.1. If agreement between parallel samples is not generally within ± 25% the user should collect parallel samples on a much more frequent basis (perhaps for all sampling points). If a trend of lower apparent concentrations with increasing flow rate is observed for a set

of parallel samples one should consider using a reduced flow rate and longer sampling interval if possible. If this practice does not improve the reproducibility further evaluation of the method performance for the compound of interest may be required.

14.3.3 Backup cartridges (two cartridges in series) should be collected with each sampling event. Backup cartridges should contain less than 20% of the amount of components of interest found in the front cartridges, or be equivalent to the blank cartridge level, whichever is greater. The frequency of use of backup cartridges should be increased if increased flow rate is shown to yield reduced component levels for parallel sampling. This practice will help to identify problems arising from breakthrough of the component of interest during sampling.

14.4 GC/MS Analysis

14.4.1 Performance criteria for MS tuning and mass calibration have been discussed in Section 11.2 and Table 2. Additional criteria may be used by the laboratory if desired. The following sections provide performance guidance and suggested criteria for determining the acceptability of the GC/MS system.

14.4.2 Chromatographic efficiency should be evaluated using spiked Tenax cartridges since this practice tests the entire system. In general a reference compound such as perfluorotoluene should be spiked onto a cartridge at the 100 nanogram level as described in Section 13.2 or 13.3. The cartridge is then analyzed by GC/MS as

described in Section 11.4. The perfluorotoluene (or other reference compound) peak is then plotted on an expanded time scale so that its width at 10% of the peak can be calculated, as shown in Figure 6. The width of the peak at 10% height should not exceed 10 seconds. More stringent criteria may be required for certain applications. The assymmetry factor (See Figure 6) should be between 0.8 and 2.0. The assymmetry factor for any polar or reactive compounds should be determined using the process described above. If peaks are observed that exceed the peak width or assymmetry factor criteria above, one should inspect the entire system to determine if unswept zones or cold spots are present in any of the fittings and is necessary. Some laboratories may chose to evaluate column performance separately by direct injection of a test mixture onto the GC column. Suitable schemes for column evaluation have been reported in the literature (7). Such schemes cannot be conducted by placing the substances onto Tenax because many of the compounds (e.g. acids, bases, alcohols) contained in the test mix are not retained, or degrade, on Tenax.

14.4.3 The system detection limit for each component is calculated from the data obtained for calibration standards. The detection limit is defined as

$$DL = A + 3.3S$$

where

DL is the calculated detection limit in nanograms injected.

A is the intercept calculated in Section 12.1.1 or 12.1.3.

S is the standard deviation of replicate determinations of the lowest level standard (at least three such determinations are required.

In general the detection limit should be 20 nanograms or less and for many applications detection limits of 1-5 nanograms may be required. The lowest level standard should yield a signal to noise ratio, from the total ion current response, of approximately 5.

14.4.4 The relative standard deviation for replicate analyses of cartridges spiked at approximately 10 times the detection limit should be 20% or less. Day to day relative standard deviation should be 25% or less.

14.4.5 A useful performance evaluation step is the use of an internal standard to track system performance. This is accomplished by spiking each cartridge, including blank, sample, and calibration cartridges with approximately 100 nanograms of a compound not generally present in ambient air (e.g. perfluorotoluene). The integrated ion intensity for this compound helps to identify problems with a specific sample. In general the user should calculate the standard deviation of the internal standard response for a given set of samples analyzed under identical tuning and calibration conditions. Any sample giving a value greater than $\pm$ 2 standard deviations from the mean (calculated

TABLE 1. RETENTION VOLUME ESTIMATES FOR COMPOUNDS ON TENAX

COMPOUND	ESTIMATED RETENTION VOLUME AT 100°F (38°C)-LITERS/GRAM
Benzene	19
Toluene	97
Ethyl Benzene	200
Xylene(s)	∿ 200
Cumene	440
n-Heptane	20
1-Heptene	40
Chloroform	8
Carbon Tetrachloride	8
1,2-Dichloroethane	10
1,1,1-Trichloroethane	6
Tetrachloroethylene	80
Trichloroethylene	20
1,2-Dichloropropane	30
1,3-Dichloropropane	90
Chlorobenzene	150
Bromoform	100
Ethylene Dibromide	60
Bromobenzene	300

TABLE 2. SUGGESTED PERFORMANCE CRITERIA FOR RELATIVE ION ABUNDANCES FROM FC-43 MASS CALIBRATION

M/E	% RELATIVE ABUNDANCE
51	1.8 ± 0.5
69	100
100	12.0 ± 1.5
119	12.0 ± 1.5
131	35.0 ± 3.5
169	3.0 ± 0.4
219	24.0 ± 2.5
264	3.7 ± 0.4
314	0.25 ± 0.1

excluding that particular sample) should be identified as suspect. Any marked change in internal standard response may indicate a need for instrument recalibration.

REFERENCES

1. Krost, K. J., Pellizzari, E. D., Walburn, S. G., and Hubbard, S. A., "Collection and Analysis of Hazardous Organic Emissions", Analytical Chemistry, 54, 810-817, 1982.

2. Pellizzari, E. O. and Bunch, J. E., "Ambient Air Carcinogenic Vapors-Improved Sampling and Analytical Techniques and Field Studies", EPA-600/2-79-081, U.S. Environmental Protection Agency, Research Triangle Park, North Carolina, 1979.

3. Kebbekus, B. B. and Bozzelli, J. W., "Collection and Analysis of Selected Volatile Organic Compounds in Ambient Air", Proc. Air Pollution Control Assoc., Paper No. 82-65.2. Air Poll. Control Assoc., Pittsburgh, Pennsylvania, 1982.

4. Riggin, R. M., "Technical Assistance Document for Sampling and Analysis of Toxic Organic Compounds in Ambient Air", EPA-600/4-83-027, U.S. Environmental Protection Agency, Research Triangle Park, North Carolina, 1983.

5. Walling, J. F., Berkley, R. E., Swanson, D. H., and Toth, F. J. "Sampling Air for Gaseous Organic Chemical-Applications to Tenax", EPA-600/7-54-82-059, U.S. Environmental Protection Agency, Research Triangle Park, North Carolina, 1982.

6. Annual Book of ASTM Standards, Part 11.03, "Atmospheric Analysis", American Society for Testing and Material, Philadelphia, Pennsylvania.

7. Grob, K., Jr., Grob, G., and Grob, K., "Comprehensive Standardized Quality Test for Glass Capillary Columns", J. Chromatog., 156, 1-20, 1978.

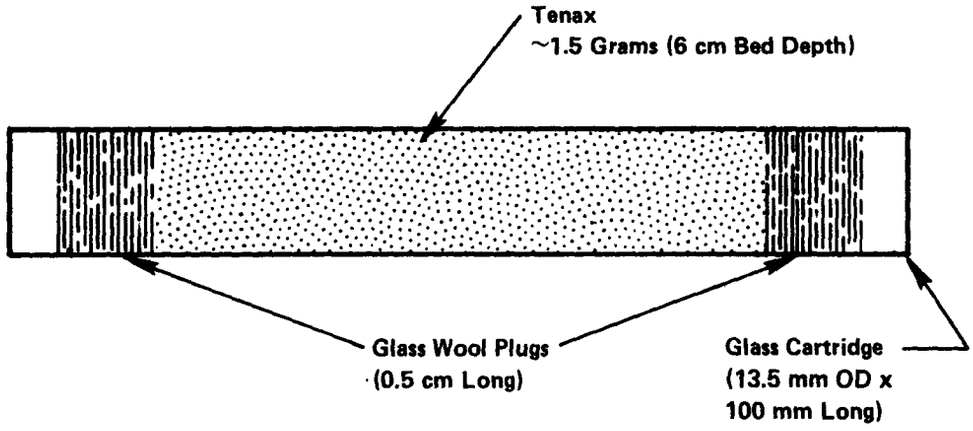

(a) Glass Cartridge

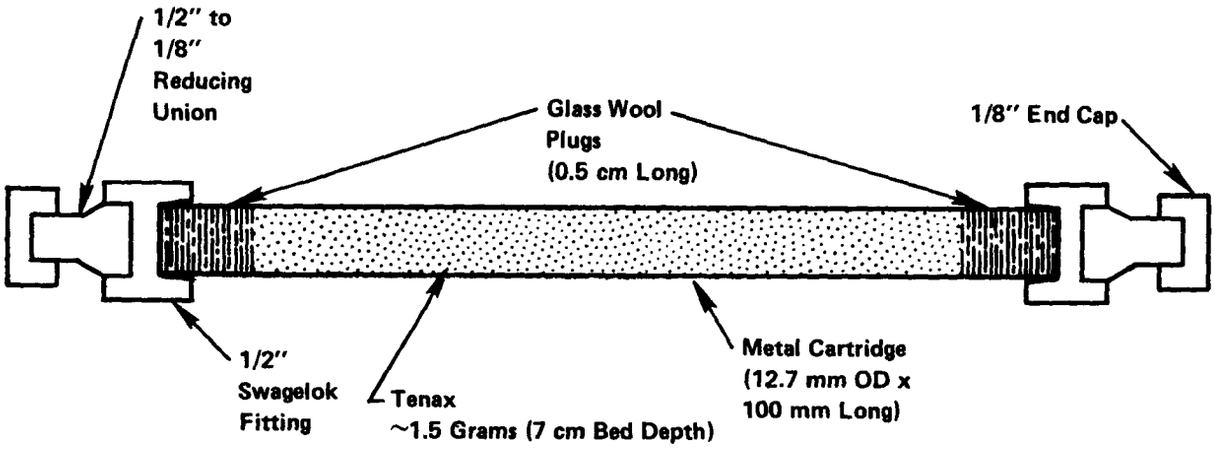

(b) Metal Cartridge

FIGURE 1. TENAX CARTRIDGE DESIGNS

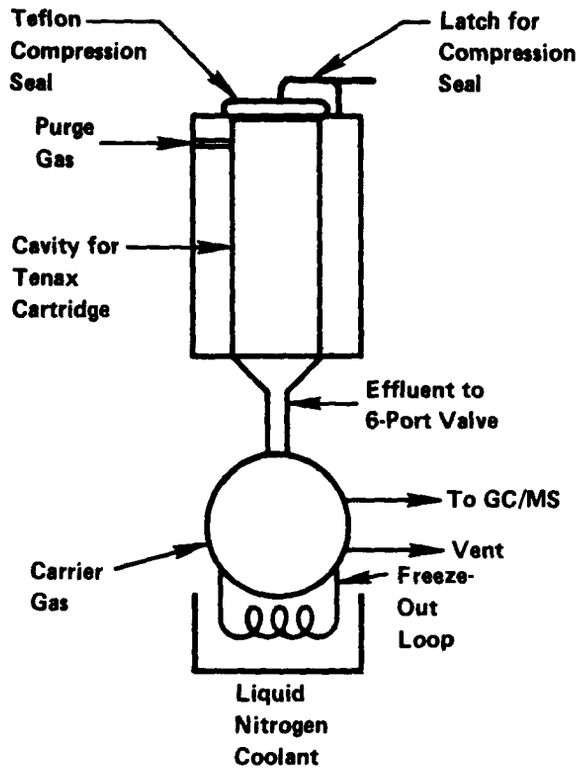

(a) Glass Cartridges (Compression Fit)

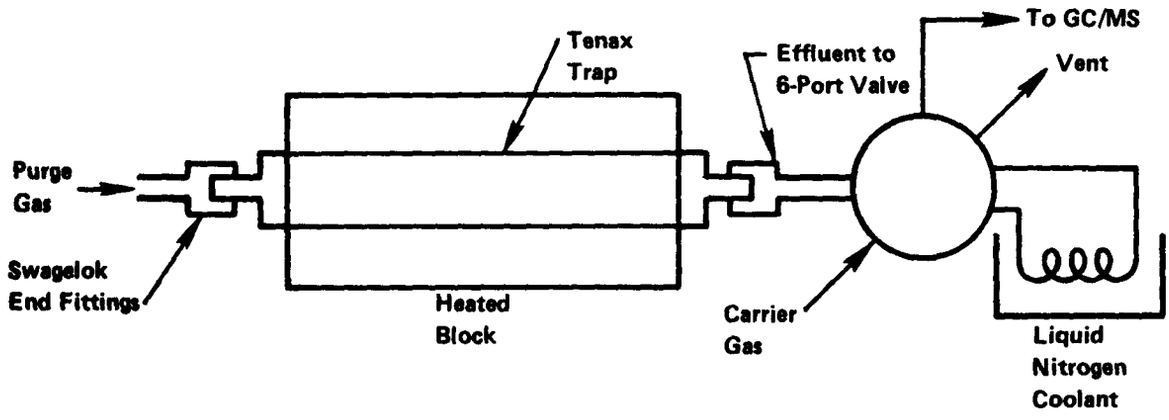

(b) Metal Cartridges (Swagelok Fittings)

FIGURE 2. TENAX CARTRIDGE DESORPTION MODULES

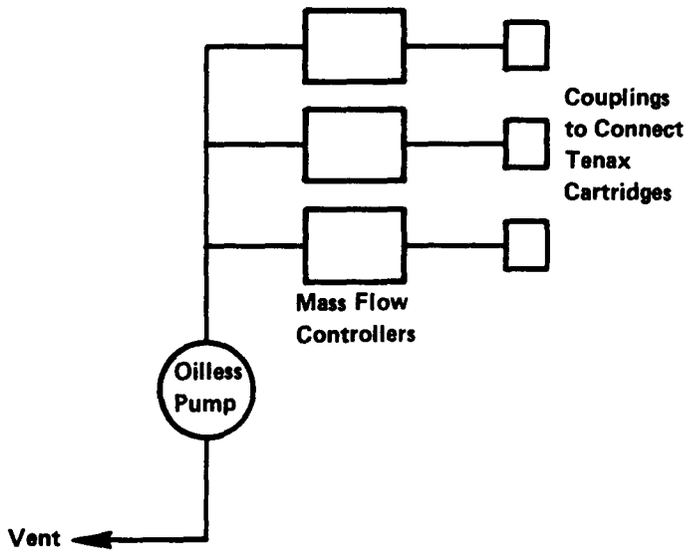

(a) Mass Flow Control

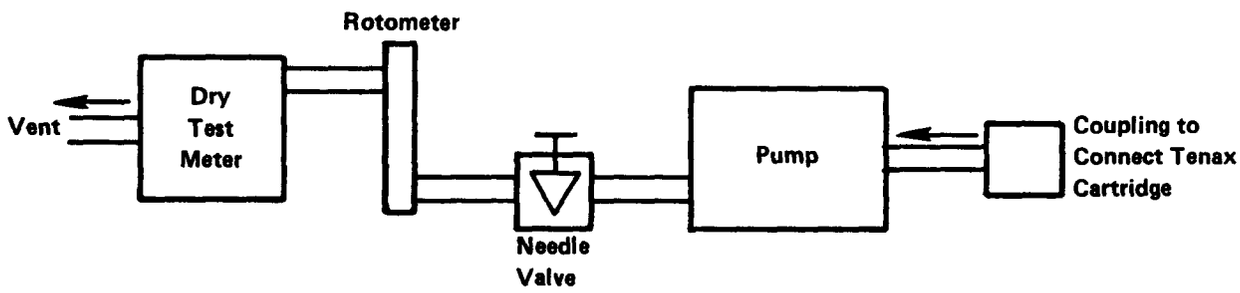

(b) Needle Valve Control

FIGURE 3. TYPICAL SAMPLING SYSTEM CONFIGURATIONS

SAMPLING DATA SHEET
(One Sample Per Data Sheet)

PROJECT: _____ DATE(S) SAMPLED: _____

SITE: _____ TIME PERIOD SAMPLED: _____

LOCATION: _____ OPERATOR: _____

INSTRUMENT MODEL NO: _____ CALIBRATED BY: _____

PUMP SERIAL NO: _____

SAMPLING DATA

Sample Number: _____

Start Time: _____ Stop Time: _____

Time	Dry Gas Meter Reading	Rotameter Reading	Flow Rate,*Q ml/Min	Ambient Temperature °C	Barometric Pressure, mmHg	Relative Humidity, %	Comments
1.							
2.							
3.							
4.							
N.							

Total Volume Data**

V_m = (Final - Initial) Dry Gas Meter Reading, or = _____ Liters

$$= \frac{Q_1 + Q_2 + Q_3 \ldots Q_N}{N} \times \frac{1}{1000 \times (\text{Sampling Time in Minutes})} = _____ \text{ Liters}$$

* Flowrate from rotameter or soap bubble calibrator (specify which).
** Use data from dry gas meter if available.

FIGURE 4. EXAMPLE SAMPLING DATA SHEET

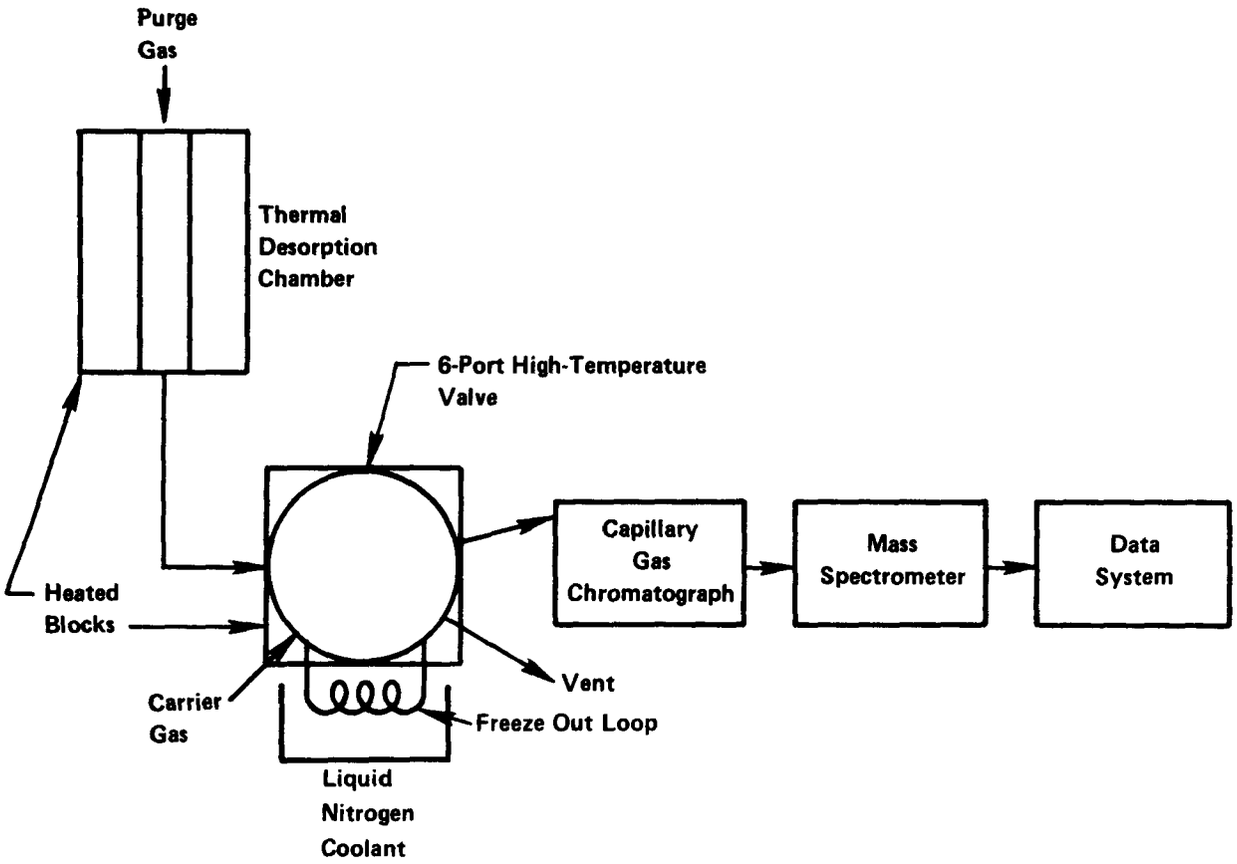

FIGURE 5. BLOCK DIAGRAM OF ANALYTICAL SYSTEM

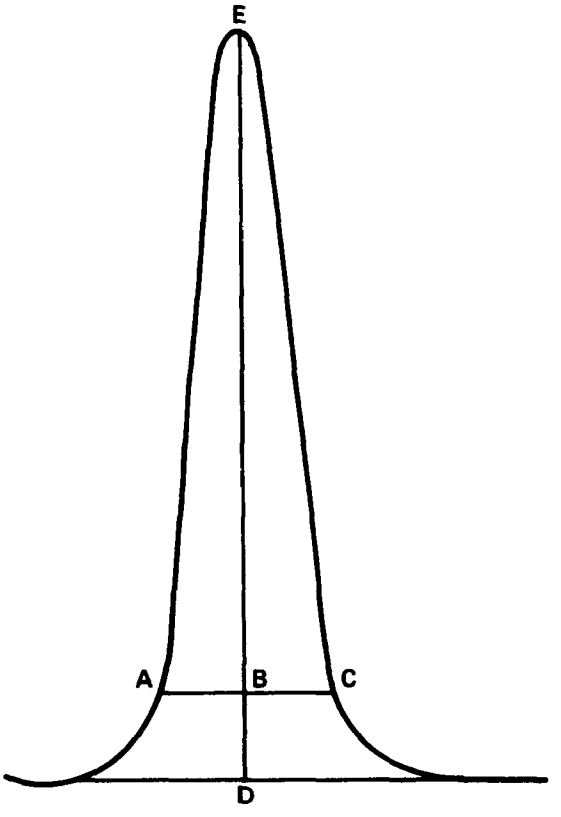

$$\text{Asymmetry Factor} = \frac{BC}{AB}$$

Example Calculation:

Peak Height = DE = 100 mm
10% Peak Height = BD = 10 mm
Peak Width at 10% Peak Height = AC = 23 mm
AB = 11 mm
BC = 12 mm

Therefore: Asymmetry Factor $= \frac{12}{11} = 1.1$

FIGURE 6. PEAK ASYMMETRY CALCULATION

METHOD TO2

Revision 1.0
April, 1984

METHOD FOR THE DETERMINATION OF VOLATILE ORGANIC COMPOUNDS IN AMBIENT AIR BY CARBON MOLECULAR SIEVE ADSORPTION AND GAS CHROMATOGRAPHY/MASS SPECTROMETRY (GC/MS)

1. Scope

1.1 This document describes a procedure for collection and determination of selected volatile organic compounds which can be captured on carbon molecular sieve (CMS) adsorbents and determined by thermal desorption GC/MS techniques.

1.2 Compounds which can be determined by this method are nonpolar and nonreactive organics having boiling points in the range -15 to +120°C. However, not all compounds meeting these criteria can be determined. Compounds for which the performance of the method has been documented are listed in Table 1. The method may be extended to other compounds but additional validation by the user is required. This method has been extensively used in a single laboratory. Consequently, its general applicability has not been thoroughly documented.

2. Applicable Documents

2.1 ASTM Standards

D 1356 Definitions of Terms Related to Atmospheric Sampling and Analysis.

E 355 Recommended Practice for Gas Chromatography Terms and Relationships.

2.2 Other Documents

Ambient Air Studies (1,2).

U.S. EPA Technical Assistance Document (3).

3. Summary of Method

3.1 Ambient air is drawn through a cartridge containing ∿0.4 of a carbon molecular sieve (CMS) adsorbent. Volatile organic compounds are captured on the adsorbent while major inorganic atmospheric constituents pass through (or are only partially retained). After sampling, the cartridge is returned to the laboratory for analysis.

3.2 Prior to analysis the cartridge is purged with 2-3 liters of pure, dry air (in the same direction as sample flow) to remove adsorbed moisture.

3.3 For analysis the cartridge is heated to 350°-400°C, under helium purge and the desorbed organic compounds are collected in a specially designed cryogenic trap. The collected organics are then flash evaporated onto a capillary column GC/MS system (held at -70°C). The individual components are identified and quantified during a temperature programmed chromatographic run.

3.4 Due to the complexity of ambient air samples, only high resolution (capillary column) GC techniques are acceptable for most applications of the method.

4. Significance

4.1 Volatile organic compounds are emitted into the atmosphere from a variety of sources including industrial and commercial facilities, hazardous waste storage and treatment facilities, etc. Many of these compounds are toxic; hence knowledge of the concentration of such materials in the ambient atmosphere is required in order to determine human health impacts.

4.2 Traditionally air monitoring methods for volatile organic compounds have relied on carbon adsorption followed by solvent desorption and GC analysis. Unfortunately, such methods are not sufficiently sensitive for ambient air monitoring, in most cases, because only a small portion of

the sample is injected onto the GC system. Recently on-line thermal desorption methods, using organic polymeric adsorbents such as Tenax® GC, have been used for ambient air monitoring. The current method uses CMS adsorbents (e.g. Spherocarb®) to capture highly volatile organics (e.g. vinyl chloride) which are not collected on Tenax®. The use of on-line thermal desorption GC/MS yields a sensitive, specific analysis procedure.

5. Definitions

Definitions used in this document and any user prepared SOPs should be consistent with ASTM D1356 (4). All abbreviations and symbols are defined with this document at the point of use.

6. Interferences

6.1 Only compounds having a mass spectrum and GC retention time similar to the compound of interest will interfere in the method. The most commonly encountered interferences are structural isomers.

6.2 Contamination of the CMS cartridge with the compound(s) of interest can be a problem in the method. The user must be careful in the preparation, storage, and handling of the cartridges through the entire process to minimize contamination.

7. Apparatus

7.1 Gas Chromatograph/Mass Spectrometry system - must be capable of subambient temperature programming. Unit mass resolution to 800 amu. Capable of scanning 30-300 amu region every 0.5-0.8 seconds. Equipped with data system for instrument control as well as data acquisition, processing and storage.

7.2 Thermal Desorption Injection Unit - Designed to accommodate CMS cartridges in use (See Figure 3) and including cryogenic trap (Figure 5) and injection valve (Carle Model 5621 or equivalent).

7.3 Sampling System - Capable of accurately and precisely drawing an air flow of 10-500 ml/minute through the CMS cartridge. (See Figure 2a or b.)

7.4 Dewar flasks - 500 mL and 5 liter.

7.5 Stopwatches.

7.6 Various pressure regulators and valves - for connecting compressed gas cylinders to GC/MS system.

7.7 Calibration gas - In aluminum cylinder. Prepared by user or vendor. For GC/MS calibration.

7.8 High pressure apparatus for preparing calibration gas cylinders (if conducted by user). Alternatively, custom prepared gas mixtures can be purchased from gas supply vendors.

7.9 Friction top can (e.g. one-gallon paint can) - With layer of activated charcoal to hold clean CMS cartridges.

7.10 Thermometer - to record ambient temperature.

7.11 Barometer (optional).

7.12 Dilution bottle - Two-liter with septum cap for standard preparation.

7.13 Teflon stirbar - 1 inch long

7.14 Gas tight syringes - 10-500 µl for standard injection onto GC/MS system and CMS cartridges.

7.15 Liquid microliter syringes - 5-50 µL for injecting neat liquid standards into dilution bottle.

7.16 Oven - 60 $\pm$ 5°C for equilibrating dilution bottle.

7.17 Magnetic stirrer.

7.18 Variable voltage transformers - (120 V and 1000 VA) and electrical connectors (or temperature controllers) to heat cartridge and cryogenic loop.

7.19 Digital pyrometer - 30 to 500°C range.

7.20 Soap bubble flow meter - 1, 10 and 100 mL calibration points.

7.21 Copper tubing (1/8 inch) and fittings for gas inlet lines.

7.22 GC column - SE-30 or alternative coating, glass capillary or fused silica.

7.23 Psychrometer (optional).

7.24 Filter holder - stainless steel or aluminum (to accommodate 1 inch diameter filter). Other sizes may be used if desired. (optional)

8. Reagents and Materials

8.1 Empty CMS cartridges - Nickel or stainless steel (See Figure 1).

8.2 CMS Adsorbent, 60/80 mesh- Spherocarb® from Analabs Inc., or equivalent.

8.3 Glasswool - silanized.

8.4 Methylene chloride - pesticide quality, or equivalent.

8.5 Gas purifier cartridge for purge and GC carrier gas containing charcoal, molecular sieves, and a drying agent. Available from various chromatography supply houses.

8.6 Helium - Ultra pure, (99.9999%) compressed gas.

8.7 Nitrogen - Ultra pure, (99.9999%) compressed gas.

8.8 Liquid nitrogen or argon (50 liter dewar).

8.9 Compressed air, if required - for operation of GC oven door.

8.10 Perfluorotributylamine (FC-43) for GC/MS calibration.

8.11 Chemical Standards - Neat compounds of interest. Highest purity available.

9. Cartridge Construction and Preparation

9.1 A suitable cartridge design in shown in Figure 1. Alternate designs have been reported (1) and are acceptable, provided the user documents their performance. The design shown in Figure 1 has a built-in heater assembly. Many users may choose to replace this heater design with a suitable separate heating block or oven to simplify the cartridge design.

9.2 The cartridge is assembled as shown in Figure 1 using standard 0.25 inch O.D. tubing (stainless steel or nickel), 1/4 inch to 1/8 inch reducing unions, 1/8 inch nuts, ferrules, and endcaps. These parts are rinsed with methylene chloride and heated at 250°C for 1 hour prior to assembly.

9.3 The thermocouple bead is fixed to the cartridge body, and insulated with a layer of Teflon tape. The heater wire (constructed from a length of thermocouple wire) is wound around the length of the cartridge and wrapped with Teflon tape to secure the wire in place. The cartridge is then wrapped with woven silica fiber insulation (Zetex or equivalent). Finally the entire assembly is wrapped with fiber glass tape.

9.4 After assembly one end of the cartridge is marked with a serial number to designate the cartridge inlet during sample collection.

9.5 The cartridges are then packed with ∿0.4 grams of CMS adsorbent. Glasswool plugs (∿0.5 inches long) are placed at each end of the cartridge to hold the adsorbent firmly in place. Care must be taken to insure that no strands of glasswool extend outside the tubing, thus causing leakage in the compression endfittings. After loading the endfittings (reducing unions and end caps) are tightened onto the cartridge.

9.6 The cartridges are conditioned for initial use by heating at 400°C overnight (at least 16 hours) with a 100 mL/minute purge of pure nitrogen. Reused cartridges need only to be heated for 4 hours and should be reanalyzed before use to ensure complete desorption of impurities.

9.7 For cartridge conditioning ultra-pure nitrogen gas is passed through a gas purifier to remove oxygen,moisture and organic contaminants. The nitrogen supply is connected to the unmarked end of the cartridge and the flow adjusted to ∿50 mL/minute using a needle valve. The gas flow from the inlet (marked) end of the cartridge is vented to the atmosphere.

9.8 The cartridge thermocouple lead is connected to a pyrometer and the heater lead is connected to a variable voltage transformer (Variac) set at 0 V. The voltage on the Variac is increased to ∿15 V and adjusted over a 3-4 minute period to stabilize the cartridge temperature at 380-400°C.

9.9 After 10-16 hours of heating (for new cartridges) the Variac is turned off and the cartridge is allowed to cool to ∿30°C, under continuing nitrogen flow.

9.10 The exit end of the cartridge is capped and then the entire cartridge is removed from the flow line and the other endcap immediately installed. The cartridges are then placed in a metal friction top (paint) can containing ∿2 inches of granulated activated charcoal (to prevent contamination of the cartridges during storage) in the bottom, beneath a retaining screen. Clean paper tissues (e.g. Kimwipes) are placed in can to avoid damage to the cartridges during shipment.

9.11 Cartridges are stored in the metal can at all times except when in use. Adhesives initially present in the cartridge insulating materials are "burnt off" during initial conditioning. Therefore, unconditioned cartridges should not be placed in the metal can since they may contaminate the other cartridges.

9.12 Cartridges are conditioned within two weeks of use. A blank from each set of cartridges is analyzed prior to use in field

sampling. If an acceptable blank level is achieved, that batch of cartridges (including the cartridge serving as the blank) can be used for field sampling.

10. Sampling

10.1 Flow Rate and Total Volume Selection

10.1.1 Each compound has a characteristic retention volume (liters of air per unit weight of adsorbent). However, all of the compounds listed in Table 1 have retention volumes (at 37°C) in excess of 100 liters/cartridge (0.4 gram CMS cartridge) except vinyl chloride for which the value is ∿30 liters/cartridge. Consequently, if vinyl chloride or similarly volatile compounds are of concern the maximum allowable sampling volume is approximately 20 liters. If such highly volatile compounds are not of concern, samples as large as 100 liters can be collected.

10.1.2 To calculate the maximum allowable sampling flow rate the following equation can be used:

$$Q_{Max} = \frac{V_{Max}}{t} \times 1000$$

where

Q_{Max} is the calculated maximum sampling rate in mL/minute.

t is the desired sampling time in minutes.

V_{Max} is the maximum allowable total volume based on the discussion in 10.1.1.

10.1.3 For the cartridge design shown in Figure 1 Q_{Max} should be between 20 and 500 mL/minute. If Q_{Max} lies outside this range the sampling time or total sampling volume must be adjusted so that this criterion is achieved.

10.1.4 The flow rate calculated in 10.1.3 defines the maximum allowable flow rate. In general, the user should collect additional samples in parallel, at successive 2- to 4-fold lower flow rates. This practice serves as a quality control procedure to check on component breakthrough and related sampling and adsorption problems, and is further discussed in the literature (5).

10.2 Sample Collection

10.2.1 Collection of an accurately known volume of air is critical to the accuracy of the results. For this reason the use of mass flow controllers, rather than conventional needle valves or orifices is highly recommended, especially at low flow rates (e.g. less than 100 milliliters/minute). Figure 2a illustrates a sampling system based on mass flow controllers which readily allows for collection of parallel samples. Figure 2b shows a commercially available sampling system based on needle valve flow controllers.

10.2.2 Prior to sample collection the sampling flow rate is calibrated near the value used for sampling, with a "dummy" CMS cartridge in place. Generally calibration is accomplished using a soap bubble flow meter or calibrated wet test meter connected to the flow exit, assuming the entire flow system is sealed. ASTM Method D 3686 (4) describes an appropriate calibration scheme, not requiring a sealed flow system downstream of the pump.

10.2.3 The flow rate should be checked before and after each sample collection. Ideally, a rotameter or mass flow meter should be included in the sampling system to allow periodic observation of the flow rate without disrupting the sampling process.

10.2.4 To collect an air sample the cartridges are removed from the sealed container just prior to initiation of the collection process.

10.2.5 The exit (unmarked) end of the cartridge is connected to the sampling apparatus. The endcap is left on the sample inlet and the entire system is leak checked by activating the sampling pump and observing that no flow is obtained over a 1 minute period. The sampling pump is then shut off.

10.2.6 The endcap is removed from the cartridge, a particulate filter and holder are placed on the inlet end of the cartridge, and the sampling pump is started. In many situations a particulate filter is not necessary since the compounds of interest are in the vapor state. However, if, large amounts of particulate matter are encountered, the filter may be useful to prevent contamination of the cartridge. The following parameters are recorded on an appropriate data sheet (Figure 4): date, sampling location, time, ambient temperature, barometric pressure, relative humidity, dry gas meter reading (if applicable), flow rate, rotometer reading (if applicable), cartridge number, pump, and dry gas meter serial number.

10.2.7 The samples are collected for the desired time, periodically recording the variables listed above. At the end of the sampling period the parameters listed in 10.2.6 are recorded and the flow rate is checked. If the flows at the beginning and end of the sampling period differ by more than 10%, the cartridge should be marked as suspect.

10.2.8 The cartridges are removed (one at a time), the endcaps are replaced, and the cartridges are placed into the original container. The friction top can is sealed and packaged for immediate shipment to the analytical laboratory.

10.2.9 The average sample rate is calculated and recorded for each cartridge according to the following equation:

$$Q_A = \frac{Q_1 + Q_2 + \ldots Q_N}{N}$$

where

Q_A = Average flow rate in ml/minute.
Q_1, Q_2,...Q_N = Flow rates determined at beginning, end, and immediate points during sampling.

N = Number of points averaged.

10.2.10 The total volumetric flow is obtained directly from the dry gas meter or calculated and recorded for each cartridge using the following equation:

$$V_m = \frac{T \times Q_A}{1000}$$

where

V_m = Total volume sampled in liters at measured temperature and pressure.
T = Sampling time = T_2-T_1, minutes.

10.2.11 The total volume sampled (V_s) at standard conditions, 760 mm Hg and 25°C, is calculated from the following equation:

$$V_s = V_m \times \frac{Pa}{760} \times \frac{298}{273 + ta}$$

where

Pa = Average barometric pressure, mm Hg
ta = Average ambient temperature, °C.

11. Sample Analysis

11.1 Sample Purging

11.1.1 Prior to analysis all samples are purged at room temperature with pure, dry air or nitrogen to remove water vapor. Purging is accomplished as described in 9.7 except that the gas flow is in the same direction as sample flow (i.e. marked end of cartridge is connected to the flow system).

11.1.2 The sample is purged at 500 mL/minute for 5 minutes. After purging the endcaps are immediately replaced. The cartridges are returned to the metal can or analyzed immediately.

11.1.3 If very humid air is being sampled the purge time may be increased to more efficiently remove water vapor. However, the sum of sample volume and purge volume must be less than 75% of the retention volume for the most volatile component of interest.

11.2 GC/MS Setup

11.2.1 Considerable variation from one laboratory to another is expected in terms of instrument configuration. Therefore, each laboratory must be responsible for verifying that their particular system yields satisfactory results. Section 14 discusses specific performance criteria which should be met.

11.2.2 A block diagram of the analytical system required for analysis of CMS cartridges is depicted in Figure 3. The thermal desorption system must be designed to accommodate the particular cartridge configuration. For the CMS cartridge design shown in Figure 1, the cartridge heating is accomplished as described in 9.8. The use of a desorption oven, in conjunction with a

simplier cartridge design is also acceptable. Exposure of the sample to metal surfaces should be minimized and only stainless steel or nickel should be employed. The volume of tubing leading from the cartridge to the GC column must be minimized and all areas must be well-swept by helium carrier gas.

11.2.3 The GC column oven must be capable of being cooled to -70°C and subsequently temperature programmed to 150°C.

11.2.4 The specific GC column and temperature program employed will be dependent on the compounds of interest. Appropriate conditions are described in the literature (2). In general, a nonpolar stationary phase (e.g. SE-30, OV-1) temperature programmed from -70 to 150°C at 8°/minute will be suitable. Fused silica, bonded-phase columns are preferable to glass columns since they are more rugged and can be inserted directly into the MS ion source, thereby eliminating the need for a GC/MS transfer line. Fused silica columns are also more readily connected to the GC injection valve (Figure 3). A drawback of fused silica, bonded-phase columns is the lower capacity compared to coated, glass capillary columns. In most cases the column capacity will be less than 1 microgram injected for fused silica columns.

11.2.5 Capillary column dimensions of 0.3 mm ID and 50 meters long are generally appropriate although shorter lengths may be sufficient in many cases.

11.2.6 Prior to instrument calibration or sample analysis the GC/MS system is assembled as shown in Figure 3. Helium purge flow (through the cartridge) and carrier flow are set at approximately 50 mL/minute and 2-3 mL/minute respectively. When a cartridge is not in place a union is placed in the helium purge line to ensure a continuous inert gas flow through the injection loop.

11.2.7 Once the column and other system components are assembled and the various flows established the column temperature is increased to 250°C for approximately four hours (or overnight if desired) to condition the column.

11.2.8 The MS and data system are set up according to the manufacturer's instructions. Electron impact ionization (70eV) and an electron multiplier gain of approximately 5×10^4 should be employed. Once the entire GC/MS system has been setup the system is calibrated as described in Section 11.3. The user should prepare a detailed standard operating procedure (SOP) describing this process for the particular instrument being used.

11.3 GC/MS Calibration

11.3.1 Tuning and mass standardization of the MS system is performed according to manufacturer's instructions and relevant user prepared SOPs. Perfluorotributylamine (FC-43) should generally be employed as the reference compound. The material is introduced directly into the ion source through a molecular leak. The instrumental parameters (e.g., lens voltages, resolution, etc.) should be adjusted to give the relative ion abundances shown in Table 2, as well as acceptable resolution and peak shape. If these approximate relative abundances cannot be achieved, the ion source may require cleaning according to manufacturer's instructions. In the event that the user's instrument cannot achieve these relative ion abundances, but is otherwise operating properly, the user may adopt another set of relative abundances as performance criteria. However, these alternate values must be repeatable on a day-to-day basis.

11.3.2 After the mass standardization and tuning process has been completed and the appropriate values entered into the data system, the user should then calibrate the entire GC/MS system by introducing known quantities of the components of interest into the system. Three alternate procedures may be employed for the calibration process including 1) direct injection of dilute vapor phase standards, prepared in a dilution bottle or compressed gas cylinder, onto the GC column, 2) injection of dilute vapor phase standards into a flowing inert gas stream directed onto a CMS cartridge, and 3) introduction of permeation or diffusion tube standards onto a CMS cartridge. Direct injection of a compressed gas cylinder (aluminum) standard containing trace levels of the compounds of interest has been found to be the most convenient practice since such standards are stable over a several month period. The standards preparation processes for the various approaches are described in Section 13. The following paragraphs describe the instrument calibration process for these approaches.

11.3.3 If the system is to be calibrated by direct injection of a vapor phase standard, the standard, in either a compressed gas cylinder or dilution flask, is obtained as described in Section 13. The MS and data system are setup for acquisition, but the ionizer filament is shut off. The GC column oven is cooled to -70°C, the injection valve is placed in the <u>load</u> mode, and the cryogenic loop is immersed in liquid nitrogen or liquid argon. Liquid argon is required for standards prepared in nitrogen or air, but not for standards prepared in helium. A known volume of the standard (10-1000 mL) is injected through the cryogenic loop at a rate of 10-100 mL/minute.

11.3.4 Immediately after loading the vapor phase standard, the injection valve is placed in the inject mode, the GC program and system clock are started, and the cryogenic loop is heated to 60°C by applying voltage (15-20 volts) to the thermocouple wire heater surrounding the loop. The voltage is adjusted to maintain a loop temperature of 60°C. An automatic temperature controller can be used in place of the manual control system. After elution of unretained components (∿3 minutes after injection) the ionizer filament is turned on and data acquisition is initiated. The helium purge line (set at 50 mL/minute) is connected to the injection valve and the valve is returned to the load mode. The loop temperature is increased to 150 °C, with helium purge, and held at this temperature until the next sample is to be loaded.

11.3.5 After the last component of interest has eluted, acquisition is terminated and the data is processed as described in Section 11.3.8. The standard injection process is repeated using different standard concentrations and/or volumes to cover the analytical range of interest.

11.3.6 If the system is to be calibrated by analysis of standard CMS cartridges, a series of cartridges is prepared as described in Sections 13.2 or 13.3. Prior to analysis the cartridges are stored (no longer than 48 hours) as described in Section 9.10. For analysis the injection valve is placed in the load mode and the cryogenic loop is immersed in liquid nitrogen (or liquid argon if desired). The CMS cartridge is installed in the helium purge line (set at 50 mL/minute) so that the helium flow through the cartridge is opposite to the direction of sample flow and the purge gas is directed through the cryogenic loop and vented to the

atmosphere. The CMS cartridge is heated to 370-400°C and maintained at this temperature for 10 minutes (using the temperature control process described in Section 9.8). During the desorption period, the GC column oven is cooled to -70°C and the MS and data system are setup for acquisition, but the ionizer filament is turned off.

11.3.7 At the end of the 10 minute desorption period, the analytical process described in Sections 11.3.4 and 11.3.5 is conducted. During the GC/MS analysis heating of the CMS cartridge is discontinued. Helium flow is maintained through the CMS cartridge and cryogenic loop until the cartridge has cooled to room temperature. At that time, the cryogenic loop is allowed to cool to room temperature and the system is ready for further cartridge analysis. Helium flow is maintained through the cryogenic loop at all times, except during the installation or removal of a CMS cartridge, to minimize contamination of the loop.

11.3.8 Data processing for instrument calibration involves determining retention times, and integrated characteristic ion intensities for each of the compounds of interest. In addition, for at least one chromatographic run, the individual mass spectra should be inspected and compared to reference spectra to ensure proper instrumental performance. Since the steps involved in data processing are highly instrument specific, the user should prepare a SOP describing the process for individual use. Overall performance criteria for instrument calibration are provided in Section 14. If these criteria are not achieved, the user should refine the instrumental parameters and/or operating procedures to meet these criteria.

11.4 Sample Analysis

11.4.1 The sample analysis is identical to that described in Sections 11.3.6 and 11.3.7 for the analysis of standard CMS cartridges.

11.4.2 Data processing for sample data generally involves 1) qualitatively determining the presence or absence of each component of interest on the basis of a set of characteristic ions and the retention time using a reversed-search software routine, 2) quantification of each identified component by integrating the intensity of a characteristic ion and comparing the value to that of the calibration standard, and 3) tentative identification of other components observed using a forward (library) search software routine. As for other user specific processes, a SOP should be prepared describing the specific operations for each individual laboratory.

12. Calculations

12.1 Calibration Response Factors

12.1.1 Data from calibration standards is used to calculate a response factor for each component of interest. Ideally the process involves analysis of at least three calibration levels of each component during a given day and determination of the response factor (area/nanogram injected) from the linear least squares fit of a plot of nanograms injected versus area (for the characteristic ion). In general, quantities of components greater than 1,000 nanograms should not be injected because of column overloading and/or MS response nonlinearity.

12.1.2 In practice the daily routine may not always allow analysis of three such calibration standards. In this situation calibration data from consecutive days may be pooled to yield a response factor, provided that analysis of replicate standards of the same concentration are shown to agree within 20% on the consecutive days. In all cases one given standard

concentration, near the midpoint of the analytical range of interest, should be injected at least once each day to determine day-to-day precision of response factors.

12.1.3 Since substantial nonlinearity may be present in the calibration curve, a nonlinear least squares fit (e.g. quadratic) should be employed. This process involves fitting the data to the following equation:

$$Y = A + BX + CX^2$$

where

Y = peak area
X = quantity of component injected nanograms
A, B, and C are coefficients in the equation.

12.2 Analyte Concentrations

12.2.1 Analyte quantities on a sample cartridge are calculated from the following equation:

$$Y_A = A + BX_A + CX^2$$

where Y_A is the area of the analyte characteristic ion for the sample cartridge.
X_A is the calculated quantity of analyte on the sample cartridge, in nanograms.
A, B, and C are the coefficients calculated from the calibration curve described in Section 12.1.3.

12.2.2 If instrumental response is essentially linear over the concentration range of interest, a linear equation (C=0 in the equation above) can be employed.

12.2.3 Concentration of analyte in the original air sample is calculated from the following equation:

$$C_A = \frac{X_A}{V_s}$$

where

C_A is the calculated concentration of analyte in ng/L.

V_s and X_A are as previously defined in Section 10.2.11 and 12.2.1, respectively.

13. Standard Preparation

13.1 Standards for Direct Injection

13.1.1 Standards for direct injection can be prepared in compressed gas cylinders or in dilution vessels. The dilution flask protocol has been described in detail in another method and is not repeated here (6). For the CMS method where only volatile compounds (boiling point <120°C) are of concern, the preparation of dilute standards in 15 liter aluminum compressed gas cylinders has been found to be most convenient. These standards are generally stable over at least a 3-4 month period and in some cases can be purchased from commercial suppliers on a custom prepared basis.

13.1.2 Preparation of compressed gas cylinders requires working with high pressure tubing and fittings, thus requiring a user prepared SOP which ensures that adequate safety precautions are taken. Basically, the preparation process involves injecting a predetermined amount of neat liquid or gas into an empty high pressure cylinder of known volume, using gas flow into the cylinder to complete the transfer.

The cylinder is then pressurized to a given value (500-1000 psi). The final cylinder pressure must be determined using a high precision gauge after the cylinder has thermally equilibrated for a 1-2 hour period after filling.

13.1.2 The concentration of components in the cylinder standard should be determined by comparison with National Bureau of Standards reference standards (e.g. SRM 1805-benzene in nitrogen) when available.

13.1.3 The theoretical concentration (at 25°C and 760 mm pressure) for preparation of cylinder standards can be calculated using the following equation:

$$C_T = \frac{V_I \times d}{V_c} \times \frac{14.7}{P_c + 14.7} \times 24.4 \times 1000$$

where C_T is the component concentration, in ng/mL at 25°C and 760 mm Hg pressure.

V_I is the volume of neat liquid component injected, in µL.

V_c is the internal volume of the cylinder, in L.

d is the density of the neat liquid component, in g/mL.

P_c is the final pressure of the cylinder standards, in pounds per square inch gauge (psig).

13.2 Preparation of Spiked Traps by Vapor Phase Injection

This process involves preparation of a dilution flask or compressed gas cylinder containing the desired concentrations of the compound(s) of interest and injecting the desired volume of vapor into a flowing gas stream which is directed onto a clean CMS cartridge. The procedure is described in detail in another method within the Compendium (6) and will not be repeated here.

13.3 Preparation of Spiked Traps Using Permeation or Diffusion Tubes

13.3.1 A flowing stream of inert gas containing known amounts of each compound of interest is generated according to ASTM Method D3609 (4). Note that a method of accurately maintaining temperature within ± 0.1°C is required and the system generally must be equilibrated for at least 48 hours before use.

13.3.2 An accurately known volume of the standard gas stream (usually 0.1-1 liter) is drawn through a clean CMS cartridge using the sampling system described in Section 10.2.1, or a similar system. However, if mass flow controllers are employed, they must be calibrated for the carrier gas used in Section 13.3.1 (usually nitrogen). Use of air as the carrier gas for permeation systems is not recommended, unless the compounds of interest are known to be highly stable in air.

13.3.3 The spiked traps are then stored or immediately analyzed as in Sections 11.3.6 and 11.3.7.

14. Performance Criteria and Quality Assurance

This section summarizes the quality assurance (QA) measures and provides guidance concerning performance criteria which should be achieved within each laboratory. In many cases the specific QA procedures have been described within the appropriate section describing the particular activity (e.g. parallel sampling).

14.1 Standard Operating Procedures (SOPs)

14.1.1 Each user should generate SOPs describing the following activities as accomplished in their laboratory: 1) assembly, calibration and operation of the sampling system, 2) preparation, handling and storage of CMS cartridges, 3) assembly and operation of GC/MS system including the thermal desorption apparatus and data system, and 4) all aspects of data recording and processing

14.1.2 SOPs should provide specific stepwise instructions and should be readily available to, and understood by the laboratory personnel conducting the work.

14.2 CMS Cartridge Preparation

14.2.1 Each batch of CMS cartridges, prepared as described in Section 9, should be checked for contamination by analyzing one cartridge, immediately after preparation. While analysis can be accomplished by GC/MS, many laboratories may chose to use GC/FID due to logistical and cost considerations.

14.2.2 Analysis by GC/FID is accomplished as described for GC/MS (Section 11) except for use of FID detection.

14.2.3 While acceptance criteria can vary depending on the components of interest, at a minimum the clean cartridge should be demonstrated to contain less than one-fourth of the minimum level of interest for each component. For most compounds the blank level should be less than 10 nanograms per cartridge in order to be acceptable. More rigid criteria may be adopted, if necessary, within a specific laboratory. If a cartridge does not meet these acceptance criteria, the entire lot should be rejected.

14.3 Sample Collection

14.3.1 During each sampling event at least one clean cartridge will accompany the samples to the field and back to the laboratory, having been placed in the sampler but without sampling air, to serve as a field blank. The average amount of material found on the field blank cartridges may be subtracted from the amount found on the actual samples. However, if the blank level is greater than

25% of the sample amount, data for that component must be identified as suspect.

14.3.2 During each sampling event at least one set of parallel samples (two or more samples collected simultaneously) should be collected, preferably at different flow rates as described in Section 10.1.4. If agreement between parallel samples is not generally within ±25% the user should collect parallel samples on a much more frequent basis (perhaps for all sampling points). If a trend of lower apparent concentrations with increasing flow rate is observed for a set of parallel samples one should consider using a reduced sampling rate and longer sampling interval, if possible. If this practice does not improve the reproducibility further evaluation of the method performance for the compound of interest might be required.

14.3.3 Backup cartridges (two cartridges in series) should be collected with each sampling event. Backup cartridges should contain less than 10% of the amount of components of interest found in the front cartridges, or be equivalent to the blank cartridge level, whichever is greater.

14.4 GC/MS Analysis

14.4.1 Performance criteria for MS tuning and mass standardization have been discussed in Section 11.2 and Table 2. Additional criteria can be used by the laboratory, if desired. The following sections provide performance guidance and suggested criteria for determining the acceptability of the GC/MS system.

14.4.2 Chromatographic efficiency should be evaluated daily by the injection of calibration standards. A reference compound(s) should be chosen from the calibration standard and plotted on an expanded time scale so that its width at 10% of the peak height can be calculated, as shown in Figure 6. The width of the peak at 10% height should not exceed 10 seconds. More stringent criteria may be required for certain applications. The asymmetry factor (see Figure 6) should be between 0.8 and 2.0. The user should also evaluate chromatographic performance for any polar or reactive compounds of interest, using the process described above. If peaks are observed that exceed the peak width or asymmetry factor criteria above, one should inspect the entire system to determine if unswept zones or cold spots are present in any of the fittings or tubing and/or if replacement of the GC column is required. Some laboratories may chose to evaluate column performance separately by direct injection of a test mixture onto the GC column. Suitable schemes for column evaluation have been reported in the literature (7).

14.4.3 The detection limit for each component is calculated from the data obtained for calibration standards. The detection limit is defined as

$$DL = A + 3.3S$$

where

DL is the calculated detection limit in nanograms injected.

A is the intercept calculated in Section 12.1.3.

S is the standard deviation of replicate determinations of the lowest level standard (at least three such determinations are required). The lowest

level standard should yield a signal to noise ratio (from the total ion current response) of approximately 5.

14.4.4 The relative standard deviation for replicate analyses of cartridges spiked at approximately 10 times the detection limit should be 20% or less. Day to day relative standard deviation for replicate cartridges should be 25% or less.

14.4.5 A useful performance evaluation step is the use of an internal standard to track system performance. This is accomplished by spiking each cartridge, including blank, sample, and calibration cartridges with approximately 100 nanograms of a compound not generally present is ambient air (e.g. perfluorotoluene). Spiking is readily accomplished using the procedure outlined in Section 13.2, using a compressed gas standard. The integrated ion intensity for this compound helps to identify problems with a specific sample. In general the user should calculate the standard deviation of the internal standard response for a given set of samples analyzed under identical tuning and calibration conditions. Any sample giving a value greater than $\pm$ 2 standard deviations from the mean (calculated excluding that particular sample) should be identified as suspect. Any marked change in internal standard response may indicate a need for instrument recalibration.

14.5 Method Precision and Recovery

14.5.1 Recovery and precision data for selected volatile organic compounds are presented in Table 1. These data were obtained using ambient air, spiked with known amounts of the compounds in a dynamic mixing system (2).

14.5.2 The data in Table 1 indicate that in general recoveries better than 75% and precision (relative standard deviations) of 15-20% can be obtained. However, selected compounds (e.g. carbon tetrachloride and

benzene) will have poorer precision and/or recovery. The user must check recovery and precision for any compounds for which quantitative data are needed.

References

1. Kebbekus, B. B. and J. W. Bozzelli. Collection and Analysis of Selected Volatile Organic Compounds in Ambient Air. Proceedings of Air Pollution Control Association, Paper No. 82-65.2, Air Pollution Control Association, Pittsburgh, Pennsylvania, 1982.

2. Riggin R. M. and L. E. Slivon. Determination of Volatile Organic Compounds in Ambient Air Using Carbon Molecular Sieve Adsorbants, Special Report on Contract 68-02-3745 (WA-7), U.S. Environmental Protection Agency, Research Triangle Park, North Carolina, September, 1983.

3. Riggin, R. M., "Technical Assistance Document for Sampling and Analysis of Toxic Organic Compounds in Ambient Air", EPA-600/4-83-027, U.S. Environmental Protection Agency, Research Triangle Park, North Carolina, 1983.

4. Annual Book of ASTM Standards, Part 11.03, "Atmospheric Analysis: Occupational Health and Safety", American Society for Testing and Materials, 1983.

5. Walling, J. F., Berkley, R. E., Swanson, D. H., and Toth, F. J. "Sampling Air for Gaseous Organic Chemical-Applications to Tenax", EPA-600/7-54-82-059, U.S. Environmental Protection Agency, Research Triangle Park, North Carolina, 1982.

6. This Methods Compendium - Tenax Method (TO 1).

7. Grob, K., Jr., Grob, G., and Grob, K., "Comprehensive Standardized Quality Test for Glass Capillary Columns", J. Chromatog., 156 1-20, 1978.

TABLE 1. VOLATILE ORGANIC COMPOUNDS FOR WHICH THE CMS ADSORPTION METHOD HAS BEEN EVALUATED

Compound	Retention Time, Minutes[a]	Characteristic Mass Fragment Used For Quantification	Method Performance Data[b]		
			Concentration, ng/L	Percent Recovery	Standard Deviation
Vinyl Chloride	6.3	62	17	74	19
Acrylonitrile	10.8	53	20	85	18
Vinylidene Chloride	10.9	96	36	94	19
Methylene Chloride	11.3	84	28	93	16
Allyl Chloride	11.4	76	32	72	19
Chloroform	13.8	83	89	91	12
1,2-Dichloroethane	14.5	62	37	85	11
1,1,1-Trichloroethane	14.7	97	100	75	9.1
Benzene	15.4	78	15	140	37
Carbon Tetrachloride	15.5	117	86	55	2.9
Toluene	18.0	91	4.1	98	5.4

a) GC conditions as follows:

Column - Hewlett Packard, crosslinked methyl silicone, 0.32 mm ID x 50 mm long, thick film, fused silica.

Temperature Program - 70°C for 2 minutes then increased at 8°C/minute to 120°C.

b) From Reference 2. For spiked ambient air.

TABLE 2. SUGGESTED PERFORMANCE CRITERIA FOR RELATIVE ION ABUNDANCES FROM FC-43 MASS CALIBRATION

M/E	% Relative Abundance
51	1.8 ± 0.5
69	100
100	12.0 ± 1.5
119	12.0 ± 1.5
131	35.0 ± 3.5
169	3.0 ± 0.4
219	24.0 ± 2.5
264	3.7 ± 0.4
314	0.25 ± 0.1

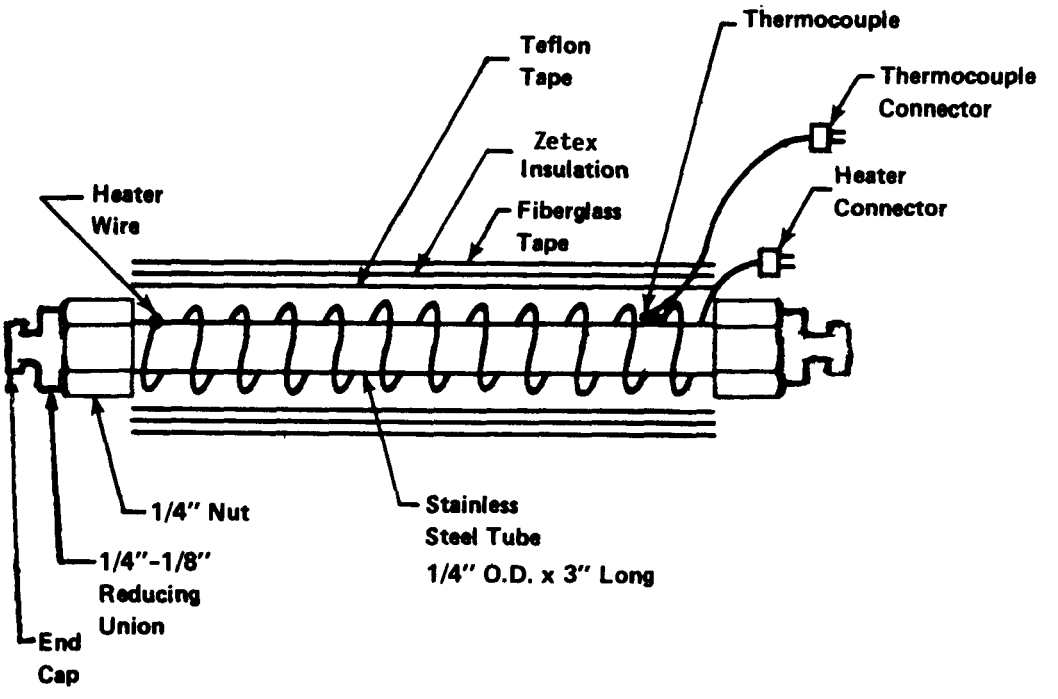

FIGURE 1. DIAGRAM SHOWING CARBON MOLECULAR SIEVE TRAP (CMS) CONSTRUCTION

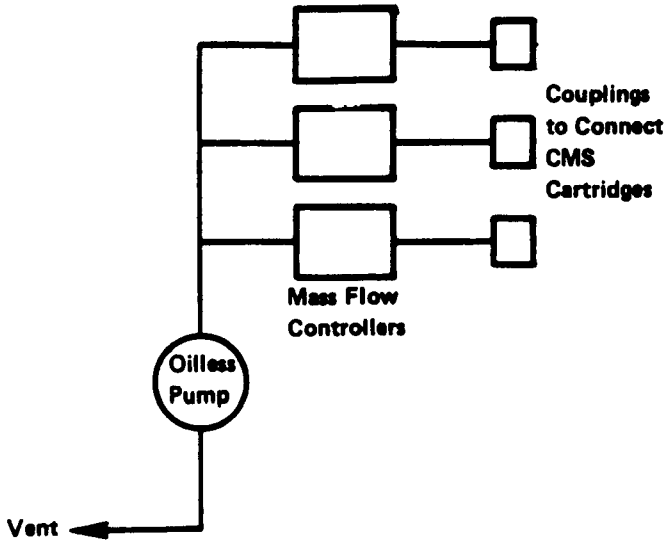

(a) Mass Flow Control

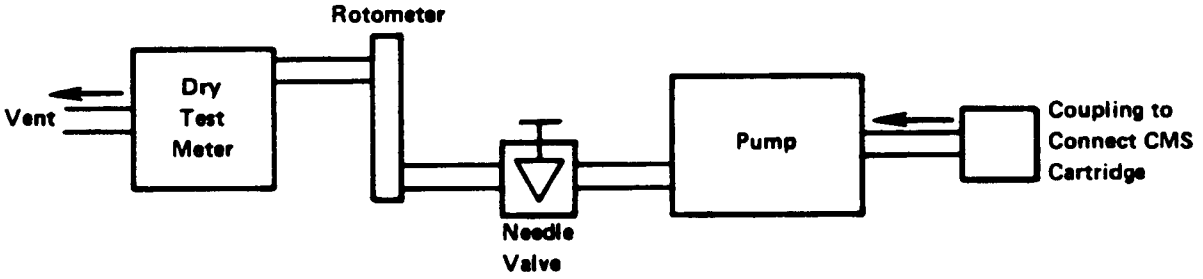

(b) Needle Valve Control

FIGURE 2. TYPICAL SAMPLING SYSTEM CONFIGURATIONS

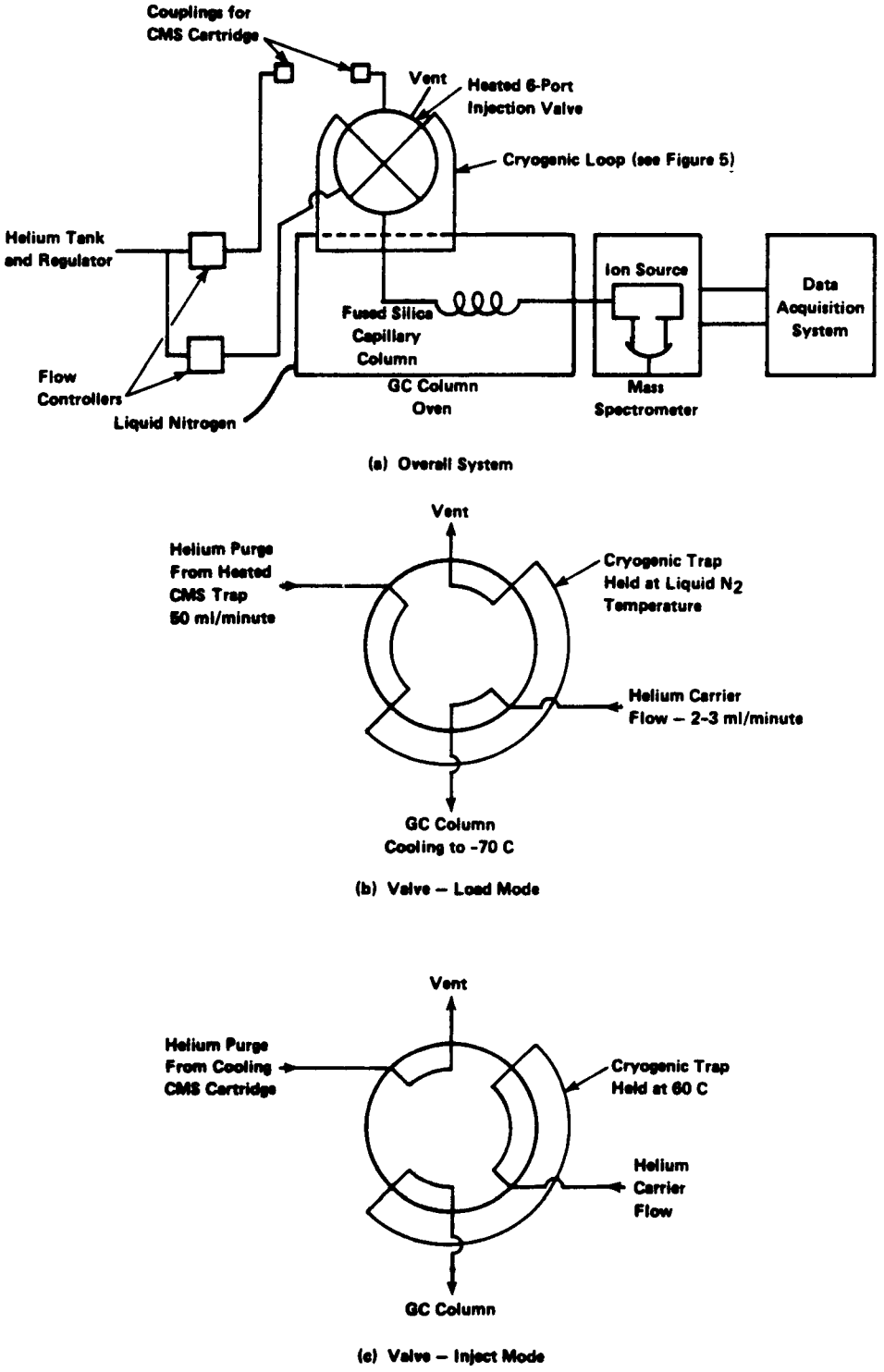

FIGURE 3. GC/MS ANALYSIS SYSTEM FOR CMS CARTRIDGES

SAMPLING DATA SHEET
(One Sample Per Data Sheet)

PROJECT: _____ DATE(S) SAMPLED: _____

SITE: _____ TIME PERIOD SAMPLED: _____

LOCATION: _____ OPERATOR: _____

INSTRUMENT MODEL NO: _____ CALIBRATED BY: _____

PUMP SERIAL NO: _____

SAMPLING DATA

Sample Number: _____

Start Time: _____ Stop Time: _____

Time	Dry Gas Meter Reading	Rotameter Reading	Flow Rate,*Q ml/Min	Ambient Temperature °C	Barometric Pressure, mmHg	Relative Humidity, %	Comments
1.							
2.							
3.							
4.							
N.							

Total Volume Data**

V_m = (Final - Initial) Dry Gas Meter Reading, or = _____ Liters

$$\frac{Q_1 + Q_2 + Q_3 \ldots Q_N}{N} \times \frac{1}{1000 \times (\text{Sampling Time in Minutes})} = _____ \text{ Liters}$$

* Flowrate from rotameter or soap bubble calibrator (specify which).
** Use data from dry gas meter if available.

FIGURE 4. EXAMPLE SAMPLING DATA SHEET

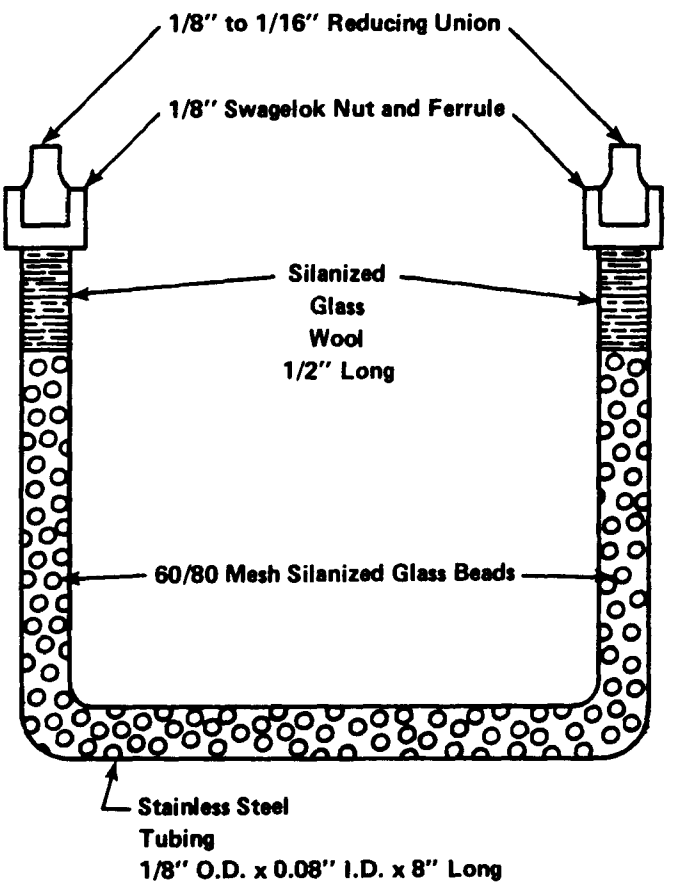

FIGURE 5. CRYOGENIC TRAP DESIGN

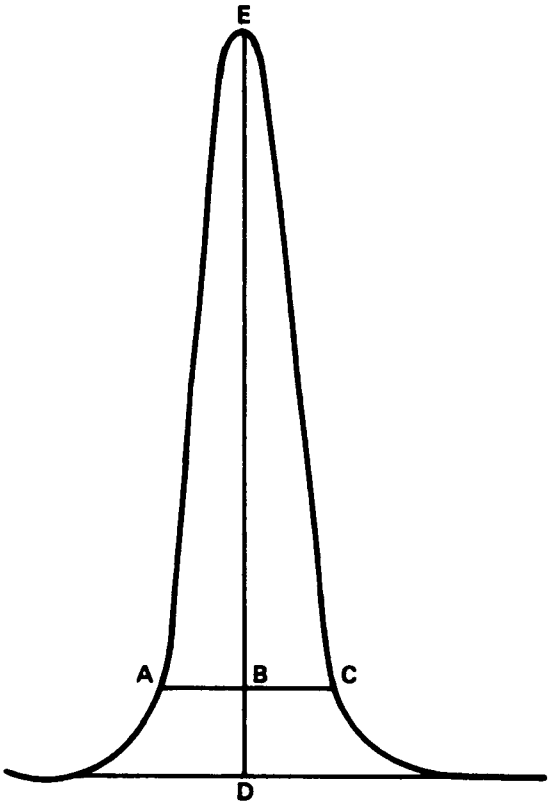

$$\text{Asymmetry Factor} = \frac{BC}{AB}$$

Example Calculation:

Peak Height = DE = 100 mm
10% Peak Height = BD = 10 mm
Peak Width at 10% Peak Height = AC = 23 mm
AB = 11 mm
BC = 12 mm

Therefore: Asymmetry Factor = $\frac{12}{11}$ = 1.1

FIGURE 6. PEAK ASYMMETRY CALCULATION

METHOD FOR THE DETERMINATION OF VOLATILE ORGANIC COMPOUNDS IN AMBIENT AIR USING CRYOGENIC PRECONCENTRATION TECHNIQUES AND GAS CHROMATOGRAPHY WITH FLAME IONIZATION AND AND ELECTRON CAPTURE DETECTION

1. Scope

1.1 This document describes a method for the determination of highly volatile compounds having boiling points in the range of -10 to 200°C.

1.2 The methodology detailed in this document is currently employed by numerous laboratories (1-4;8-11). Modifications to this methodology should be accompanied by appropriate documentation of the validity and reliability of these changes.

2. Applicable Documents

2.1 ASTM Standards

D1356 Definition of Terms Related to Atmospheric Sampling and Analysis
E 355 Recommended Practice for Gas Chromatography Terms and Relationships

2.2 Other Documents

Ambient Air Studies (1-4).
U. S. EPA Technical Assistance Document (5).

3. Summary of Method

3.1 Ambient air analyses are performed as follows. A collection trap, as illustrated in Figure 1, is submerged in either liquid oxygen or argon. Liquid argon is highly recommended for use because of the safety hazard associated with liquid

oxygen. With the sampling valve in the fill position an air sample is then admitted into the trap by a volume measuring apparatus. In the meantime, the column oven is cooled to a sub-ambient temperature (-50°C). Once sample collection is completed, the valve is switched so that the carrier gas sweeps the contents of the trap onto the head of the cooled GC column. Simultaneously, the liquid cryogen is removed and the trap is heated to assist the sample transfer process. The GC column is temperature programmed and the component peaks eluting from the columns are identified and quantified using flame ionization and/or electron capture detection. Alternate detectors (e.g. photoionization) can be used as appropriate. An automated system incorporating these various operations as well as the data processing function has been described in the literature (8,9).

3.2 Due to the complexity of ambient air samples, high resolution (capillary column) GC techniques are recommended. However, when highly selective detectors (such as the electron capture detector) are employed, packed column technology without cryogenic temperature programming can be effectively utilized in some cases.

4. Significance

4.1 Volatile organic compounds are emitted into the atmosphere from a variety of sources including industrial and commercial facilities, hazardous waste storage facilities, etc. Many of these compounds are toxic, hence knowledge of the levels of such materials in the ambient atmosphere is required in order to determine human health impacts.

4.2 Because these organic species are present at ppb levels or below, some means of sample preconcentration is necessary in order to acquire sufficient material for identification and quantitation. The two primary preconcentration techniques are cryogenic collection and the use of solid adsorbents. The method described herein involves the former technique.

5. Definitions

Definitions used in this document and any user prepared SOPs should be consistent with ASTM D1356 (6). All abbreviations and symbols are defined within this document at the point of use.

6. Interferences/Limitations

6.1 Compounds having similar GC retention times will interfere in the method. Replacing the flame ionization detector with more selective detection systems will help to minimize these interferences. Chlorinated species, in particular, should be determined using the electron capture detector to avoid interference from volatile hydrocarbons.

6.2 An important limitation of the technique is the condensation of moisture in the collection trap. The possibility of ice plugging the trap and stopping the flow is of concern, and water subsequently transferred to the capillary column may also result in flow stoppage and cause deleterious effects to certain column materials. Use of permaselective Nafion® tubing in-line before the cryogenic trap avoids this problem; however, the material must be used with caution because of possible loses of certain compounds. Another potential problem is contamination from the Nafion ® tubing. The user should consult the literature (7-12) for details on the use of permeation-type driers.

7. Apparatus

7.1 Gas chromatograph/Flame Ionization/Electron Capture Detection System- must be capable of subambient temperature programming. A recent publication (8) describes an automated GC system in which the cyrogenic sampling and analysis features are combined. This system allows simultaneous flame ionization and electron capture detection.

7.2 Six-port sampling valve - modified to accept a sample collection trap (Figure 1).

7.3 Collection trap - 20 cm x 0.2 cm I.D. stainless steel tubing packed with 60/80 mesh silanized glass beads and sealed with glass wool. For the manual system (Section 9.2) the trap is externally wrapped with 28 gauge (duplex and fiberglass insulated) type "K" thermocouple wire. This wire, beaded at one end, is connected to a powerstat during the heating cycle. A thermocouple is also attached to the trap as shown in Figure 1.

7.4 Powerstat - for heating trap.

7.5 Temperature readout device - for measuring trap temperature during heating cycle.

7.6 Glass dewar flask - for holding cryogen.

7.7 Sample volume measuring apparatus - capable of accurately and precisely measuring a total sample volume up to 500 cc at sampling rates between 10 and 200 cc/minute. See Section 9.

7.8 Stopwatch.

7.9 Dilution container for standards preparation - glass flasks or Teflon (Tedlar) bags, .002 inch film thickness (see Figure 2).

7.10 Liquid microliter syringes - 5-50 µl for injecting liquid standards into dilution container.

7.11 Volumetric flasks - various sizes, 1-10 mL.

7.12 GC column - Hewlett Packard 50 meter methyl silicone cross-linked fused silica column (.3 mm I.D., thick film) or equivalent.

7.13 Mass flow controller - 10-200 mL/minute flow control range.

7.14 Permeation drier - PermaPure® - Model MD-125F, or equivalent. Alternate designs described in the literature (7-12) may also be acceptable.

8. Reagents and Materials

8.1 Glass beads - 60/80 mesh, silanized.

8.2 Glasswool - silanized.

8.3 Helium - zero grade compressed gas, 99.9999%.

8.4 Hydrogen - zero grade compressed gas, 99.9999%.

8.5 Air - zero grade compressed gas.

8.6 Liquid argon (or liquid oxygen).

8.7 Liquid nitrogen.

8.8 SRM 1805 - benzene in nitrogen standard. Available from the National Bureau of Standards. Additional such standards will become available in the future.

8.9 Chemical standards - neat compounds of interest, highest purity available.

9. Sampling and Analysis Apparatus

Two systems are described below which allow collection of an accurately known volume of air (100-1000 mL) onto a cryogenically cooled trap. The first system (Section 9.1) is an automated device described in the literature (8,9). The second system (Section 9.2) is a manual device, also described in the literature (2).

9.1 The automated sampling and analysis system is shown in Figure 3. This system is composed of an automated GC system (Hewlett Packard Model 5880A, Level 4, or equivalent) and a sample collection system (Nutech Model 320-01, or equivalent). The overall system is described in the literature (8).

9.1.1 The electronic console of the sampling unit controls the mechanical operation of the six-port valve and cryogenic trapping components as well as the temperatures in each of the three zones (sample trap, transfer line, and valve).

9.1.2 The valve (six-port air activated, Seiscor Model 8 or equivalent) and transfer line are constantly maintained at 120°C. During sample collection the trap temperature is maintained at -160 ± 5°C by a flow of liquid nitrogen controlled by a solenoid valve. A cylindrical 250 with heater, held in direct contact with the trap, is used to heat the trap to 120°C in 60 seconds or less during the sample desorption step. The construction of the sample trap is described in Section 7.3.

9.1.3 The sample flow is controlled by a pump/mass flow controller assembly, as shown in Figure 3. A sample flow of 10-100 mL/minute is generally employed, depending on the desired sampling period. A total volume of 100-1000 mL is commonly collected.

9.1.4 In many situations a permaselective drier (e.g. Nafion®) may be required to remove moisture from the sample. Such a device is installed at the sample inlet. Two configurations for such devices are available. The first configuration is the tube and shell type in which the sample flow tube is surrounded by an outer shell through which a countercurrent flow of clean, dry air is maintained. The dry air stream must be free from contaminants and its flow rate should be 3-4 times greater than the sample flow to achieve effective drying. A second configuration (7) involves placing a drying agent, e.g. magnesium carbonate, on the outside of the sample flow tube. This approach eliminates the need for a source of clean air in the field. However, contamination from the drying agent can be a problem.

9.2 The manual sampling consists of the sample volume measuring apparatus shown in Figure 4 connected to the cryogenic trap/GC assembly shown in Figure 1. The operation of this

assembly is described below.

9.2.1 Pump-Down Position

The purpose of the pump-down mode of operation is to evacuate the ballast tank in preparation for collecting a sample as illustrated in Figure 4. (While in this position, helium can also be utilized to back-flush the sample line, trap, etc. However, this cleaning procedure is not normally needed during most sampling operations). The pump used for evacuating the system should be capable of attaining 200 torr pressure.

9.2.2 Volume Measuring Position

Once the system has been sufficiently evacuated, the 4-way ball valve is switched to prepare for sample collection. The 3-position valve is used to initiate sample flow while the needle valve controls the rate of flow.

9.2.3 Sample Volume Calculation

The volume of air that has passed through the collection trap corresponds to a known change in pressure within the ballast tank (as measured by the Wallace Tiernan gauge). Knowing the volume, pressure change, and temperature of the system, the ideal gas law can be used to calculate the number of moles of air sampled. On a volume basis, this converts to the following equation:

$$V_s = \frac{\Delta P}{760} \times \frac{298}{T_A + 273}$$

where

V_s = Volume sampled at 760 mm Hg pressure and 25°C.

ΔP = Change in pressure within the ballast tank, mm of Hg.

V = Volume of ballast tank and gauge.

T_A = Temperature of ballast tank, °C.

The internal volume of the ballast tank and gauge can be determined either by H_2O displacement or by injecting calibrated volumes of air into the system using large volume syringes, etc.

10. Sampling and Analysis Procedure - Manual Device

10.1 This procedure assumes the use of the manual sampling system described in Section 9.2

10.2 Prior to sample collection, the entire assembly should be leak-checked. This task is accomplished by sealing the sampling inlet line, pumping the unit down and placing the unit in the flow measuring mode of operation. An initial reading on the absolute pressure gauge is taken and rechecked after 10 minutes. No apparent change should be detected.

10.3 Preparation for sample collection is carried out by switching the 6-port valve to the "fill" position and connecting the heated sample line to the sample source. Meanwhile the collection trap is heated to 150°C (or other appropriate temperature). The volume measuring apparatus is pumped-down and switched to the flow measuring mode. The 3-position valve is opened and a known volume of sample is then passed through the heated sample line and trap to purge the system.

10.4 After the system purge is completed, the 3-position valve is closed and the corresponding gauge pressure is recorded. The collection trap is then immersed into a dewar of liquid argon (or liquid oxygen) and the 3-position valve is temporarily opened to draw in a known volume of air, i.e. a change in pressure corresponds to a specific volume of air (see Section 9). Liquid nitrogen cannot be used as the cryogen since it will also condense oxygen from the air. Liquid oxygen represents a potential fire hazard and should not be employed unless absolutely necessary.

10.5 After sample collection is completed, the 6-port valve is switched to the inject position, the dewar is removed and the trap is heated to 150°C to transfer the sample components to the head of the GC column which is initially maintained at -50°C. Temperature programming is initiated to elute the compounds of interest.

10.6 A GC integrator (or data system if available) is activated during the injection cycle to provide component identification and quantitation.

11. Sampling and Analysis Procedure - Automated Device

11.1 This procedure assumes the use of the automated system shown in Figure 3. The components of this system are discussed in Section 9.1.

11.2 Prior to initial sample collection the entire assembly should be leak-checked. This task is completed by sealing the sample inlet line and noting that the flow indication or the mass flow controller drops to zero (less than 1 mL/minute).

11.3 The sample trap, valve, and transfer line are heated to 120°C and ambient air is drawn through the apparatus (~60 mL/minute) for a period of time 5-10 minutes to flush the system, with the sample valve in the inject position. During this time the GC column is maintained at 150°C to condition the column.

11.4 The sample trap is then cooled to -160 ± 5°C using a controlled flow of liquid nitrogen. Once the trap temperature has stabilized, sample flow through the trap is initiated by placing the valve in the inject position and the desired volume of air is collected.

11.5 During the sample collection period the GC column is stabilized at -50°C to allow for immediate injection of the sample after collection.

11.6 At the end of the collection period the valve is immediately placed in the inject position, and the cryogenic trap is rapidly heated to 120°C to desorb the components onto GC column. The GC temperature program and data acquisition are initiated at this time.

11.7 At the desired time the cryogenic trap is cooled to - 160°C, the valve is returned to the collect position and the next sample collection is initiated (to coincide with the completion of the GC analysis of the previous sample).

12. Calibration Procedure

Prior to sample analysis, and approximately every 4-6 hours thereafter, a calibration standard must be analyzed, using the identical procedure employed for ambient air samples (either Section 10 or 11). This section describes three alternative approaches for preparing suitable standards.

12.1 Teflon® (on Tedlar®) Bags

12.1.1 The bag (nominal size; 20L) is filled with zero air and leaked checked. This can be easily accomplished by placing a moderate weight (text book) on the inflated bag and leaving overnight. No visible change in bag volume indicates a good seal. The bag should also be equipped with a quick-connect fitting for sample withdrawal and an insertion port for liquid injections (Figure 2).

12.1.2 Before preparing a standard mixture, the bag is sequentially filled and evacuated with zero air (5 times). After the 5th filling, a sample blank is obtained using the sampling procedure outlined in Section 10.

12.1.3 In order to prepare a standard mixture, the bag is filled with a known volume of zero air. This flow should be measured via a calibrated mass flow controller or equivalent flow measuring device. A measured aliquot of each analyte of interest is injected into the bag through the insertion port using a microliter syringe. For those compounds with vapor pressures lower than benzene or for strongly adsorbed species, the bag should be heated (60°C) oven) during the entire calibration period.

12.1.4 To withdraw a sample for analysis, the sampling line is directly connected to the bag. Quick connect fittings allow this hook-up to be easily accomplished and also minimizes bag contamination from laboratory air. Sample collection is initiated as described earlier.

12.2 Glass Flasks

12.2.1 If a glass flask is employed (Figure 2) the exact volume is determined by weighing the flask before and after filling with deionized water. The flask is dried by heating at 200°C.

12.2.2 To prepare a standard, the dried flask is flushed with zero air until cleaned (i.e. a blank run is made). An appropriate aliquot of each analyte is injected using the same procedures as described for preparing bag standards.

12.2.3 To withdraw a standard for analysis, the GC sampling line is directly connected to the flask and a sample obtained. However, because the flask

is a rigid container, it will not remain at atmospheric pressure after sampling has commenced. In order to prevent room air leakage into the flask, it is recommended that no more than 10% of the initial volume be exhausted during the calibration period (i.e. 200 cc if a 2 liter flask is used).

12.3 Pressurized Gas Cylinders

12.3.1 Pressurized gas cylinders containing selected analytes at ppb concentrations in air can be prepared or purchased. A limited number of analytes (e.g. benzene, propane) are available from NBS.

12.3.2 Speciality gas suppliers will prepare custom gas mixtures, and will cross reference the analyte concentrations to an NBS standard for an additional charge. In general, the user should purchase such custom mixtures, rather than attempting to prepare them because of the special high pressure filling apparatus required. However, the concentrations should be checked, either by the supplier or the user using NBS reference materials.

12.3.3 Generally, aluminum cylinders are suitable since most analytes of potential interest in this method have been shown to be stable for at least several months in such cylinders. Regulators constructed of stainless steel and Teflon® (no silicon or neoprene rubber).

12.3.4 Before use the tank regulator should be flushed by alternately pressuring with the tank mixture, closing the tank valve, and venting the regulator contents to the atmosphere several times.

12.3.5 For calibration a continuous flow of the gas mixture should be maintained through a glass or Teflon® manifold from which the calibration standard is drawn. To generate various calibration concentrations the

pressurized gas mixture can be diluted, as desired, with zero grade air using a dynamic dilution system (e.g. CSI Model 1700).

13. Calibration Strategy

13.1 Vapor phase standards can be prepared with either neat liquids or diluted liquid mixtures depending upon the concentration levels desired. It is recommended that benzene, also be included in this preparation scheme so that flame ionization detector response factors, relative to benzene, can be determined for the other compounds. The benzene concentration generated in this fashion should be cross-checked with an NBS (e.g. SRM 1805) for accuracy determinations.

13.2 Under normal conditions, weekly multipoint calibrations should be conducted. Each multipoint calibration should include a blank run and four concentration levels for the target species. The generated concentrations should bracket the expected concentration of ambient air samples.

13.3 A plot of nanograms injected versus area using a linear least squares fit of the calibration data will yield the following equation:

$$Y = A + BX$$

where

Y = quantity of component, nanograms
A = intercept
B = slope (response factor)

If substantial nonlinearity is present in the calibration curve a quadratic fit of the data can be used:

$$Y = A + BX + CX^2$$

where

$$C = \text{constant}$$

Alternatively, a, stepwise multilevel calibration scheme may be used if more convenient for the data system in use.

14. Performance Criteria and Quality Assurance

This section summarizes the quality assurance (QA) measures and provides guidance concerning performance criteria which should be achieved within each laboratory.

14.1 Standard Operating Procedures (SOPs)

14.1.1 Each user should generate SOPs describing the following activities as accomplished in their laboratories:

1) assembly, calibration and operation of the sampling system.
2) preparation and handling of calibration standards.
3) assembly, calibration and operation of the GC/FID system and
4) all aspects of data recording and processing.

14.1.2 SOPs should provide specific stepwise instructions and should be readily available to, and understood by, the laboratory personnel conducting the work.

14.2 Method Sensitivity, Precision and Accuracy

14.2.1 System sensitivity (detection limit) for each component is calculated from the data obtained for calibration standards. The detection limit is defined as

$$DL = A + 3.3S$$

where

DL = calculated detection limit in nanograms injected.
A = intercept calculated in Section 13.
S = standard deviation of replicate determination of the lowest level standard (at least three determinations are required).

For many compounds detection limits of 1 to 5 nanograms are found using the flame ionization detection. Lower detection limits can be obtained for chlorinated hydrocarbons using the electron capture detector.

14.2.2 A precision of ± 5% (relative standard deviation) can be readily achieved at concentrations 10 times the detection limit. Typical performance data are included in Table 1.

14.2.3 Method accuracy is estimated to be within ± 10%, based on National Bureau of Standard calibrated mixtures.

REFERENCES

1. Holdren, M., Spicer, C., Sticksel, P., Nepsund, K., Ward, G., and Smith, R., "Implementation and Analysis of Hydrocarbon Grab Samples from Cleveland and Cincinnati 1981 Ozone Monitoring Study", EPA-905/4-82-001. U.S. Environmental Protection Agency, Research Triangle Park, North Carolina,1982.

2. Westberg, H., Rasmussen, R., and Holdren, M., "Gas Chromatographic Analysis of Ambient Air for Light Hydrocarbons Using a Chemically Bonded Stationary Phase", Anal. Chem. 46, 1852-1854, 1974.

3. Lonneman, W. A., "Ozone and Hydrocarbon Measurements in Recent Oxidant Transport Studies", in Int. Conf. on Photochemical Oxidant Pollutant and Its Control Proceedings, EPA-600/3-77-001a, 1977.

4. Singh, H., "Guidance for the Collection and Use of Ambient Hydrocarbon Species Data in Development of Ozone Control Strategies", EPA-450/4-80-008. U.S. Environmental Protection Agency, Research Triangle Park, North Carolina, 1980.

5. Riggin, R. M., "Technical Assistance Document for Sampling and Analysis of Toxic Organic Compounds in Ambient Air", EPA-600/4-83-027. U.S. Environmental Protection Agency, Research Triangle Park, North Carolina, 1983.

6. Annual Book of ASTM Standards, Part 11.03, "Atmospheric Analysis", American Society for Testing and Materials, Philadelphia, Pennsylvania, 1983.

7. Foulger, B. E. and P. G. Sinamouds, "Drier for Field Use in the Determination of Trace Atmospheric Gases", Anal. Chem., 51, 1089-1090, 1979.

8. Pheil, J. D. and W. A. McClenney, "Reduced Temperature Preconcentration Gas Chromatographic Analysis of Ambient Vapor-Phase Organic Compounds: System Automation", Anal. Chem., submitted, 1984.

9. Holdren, M. W., W. A. McClenney, and R. N. Smith "Reduced Temperature Preconcentration and Gas Chromatographic Analysis of Ambient Vapor-Phase Organic Compounds: System Performance", Anal. Chem., submitted, 1984.

10. Holdren, M., S. Rust, R. Smith, and J. Koetz, "Evaluation of Cryogenic Trapping as a Means for Collecting Organic Compounds in Ambient Air", Draft Final Report on Contract No. 68-02-3487, 1984.

REFERENCES (Continued)

11. Cox R. D. and R. E. Earp,"Determination of Trace Level Organics in Ambient Air by High-Resolution Gas Chromatography with Simultaneous Photoionization and Flame Ionization Detection", Anal. Chem. 54, 2265-2270, 1982.

12. Burns W. F., O. T. Tingy, R. C. Evans and E. H. Bates, "Problems with a Nafion® Membrane Dryer for Chromatographic Samples", J. Chrom. 269, 1-9, 1983.

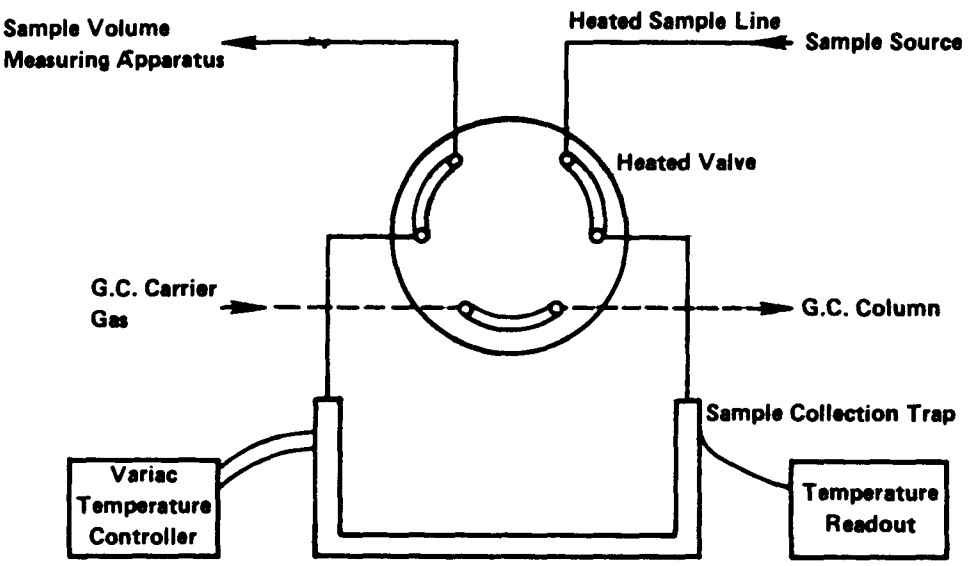

a. Fill Position

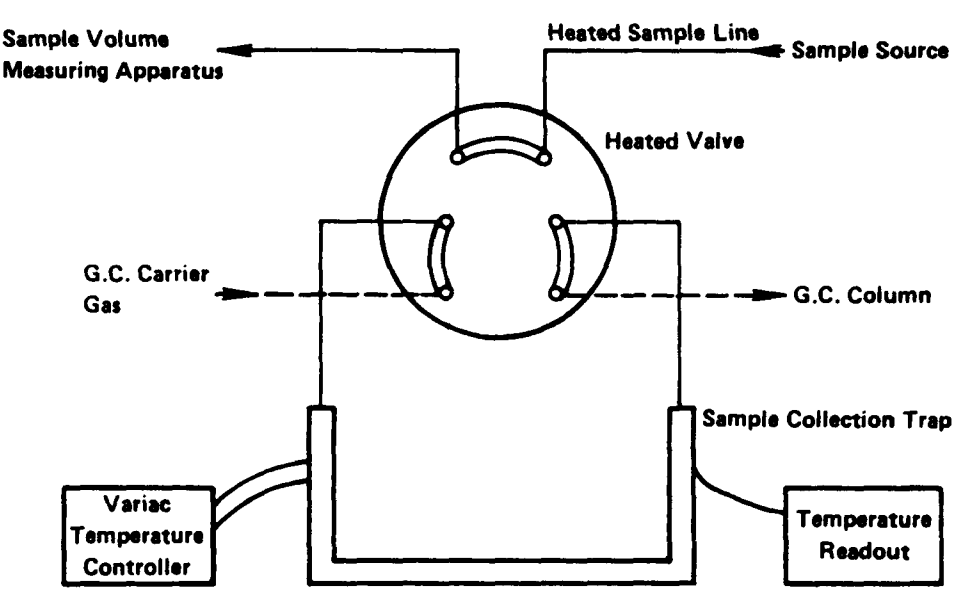

b. Injection Position

Figure 1. Schematic of Six-Port Valve Used for Sample Collection.

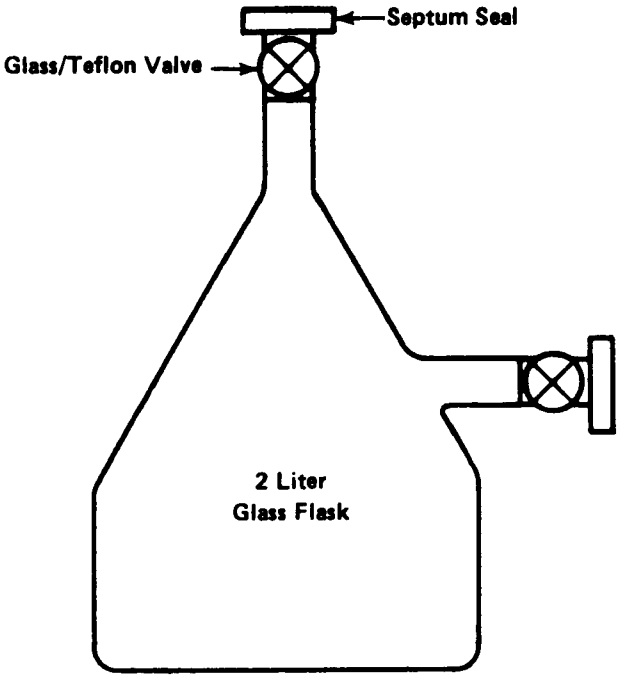

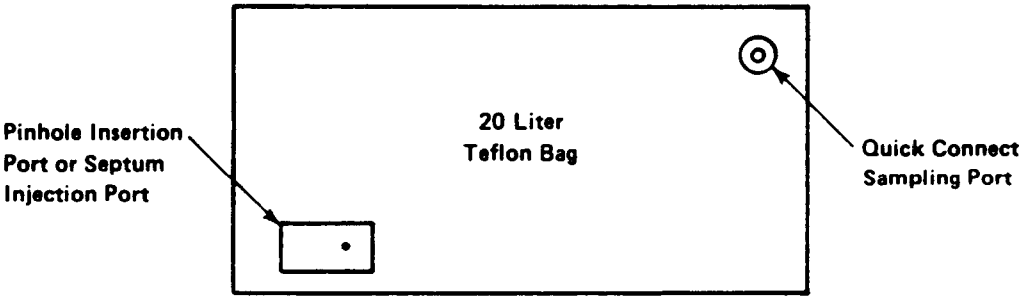

Figure 2. Dilution Containers for Standard Mixtures

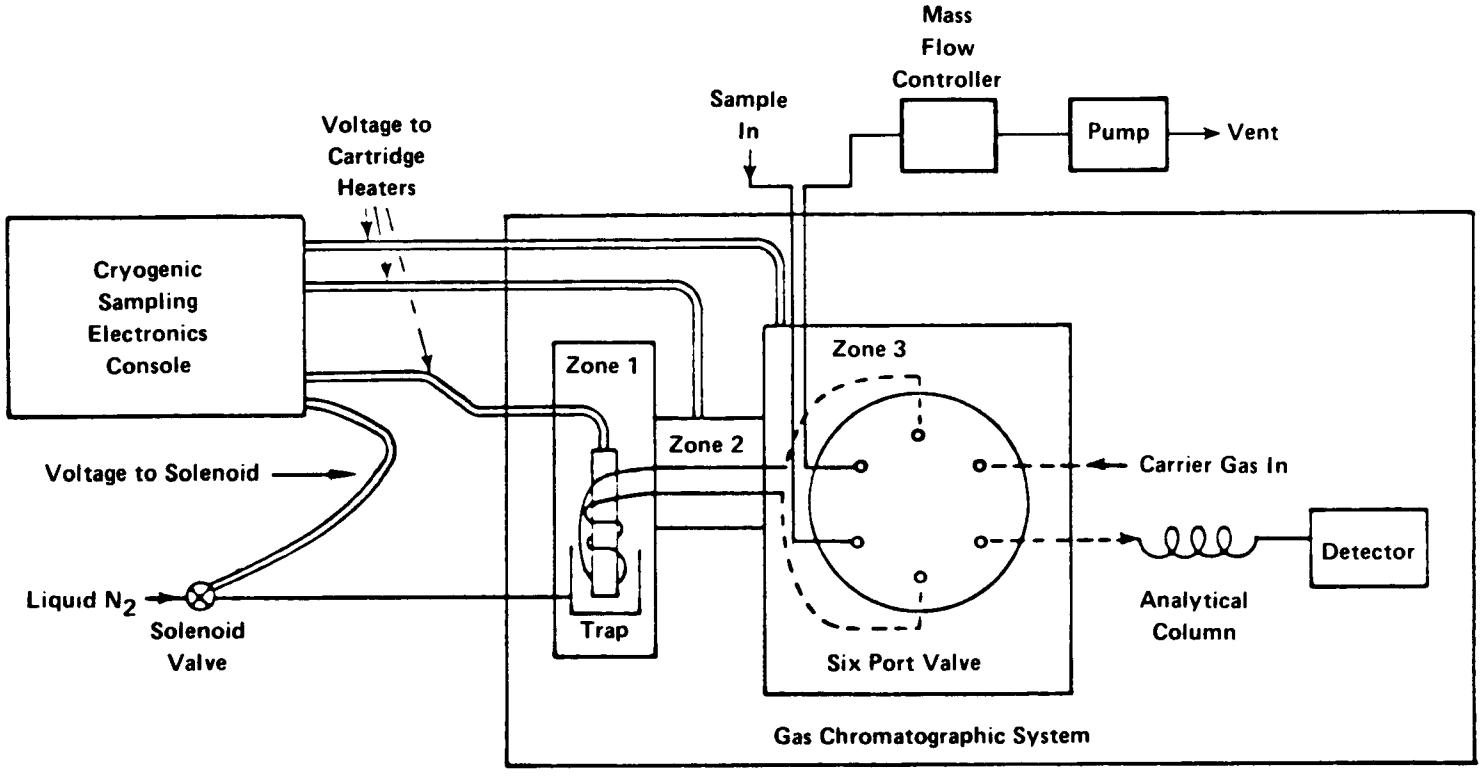

FIGURE 3. AUTOMATED SAMPLING AND ANALYSIS SYSTEM FOR CRYOGENIC TRAPPING

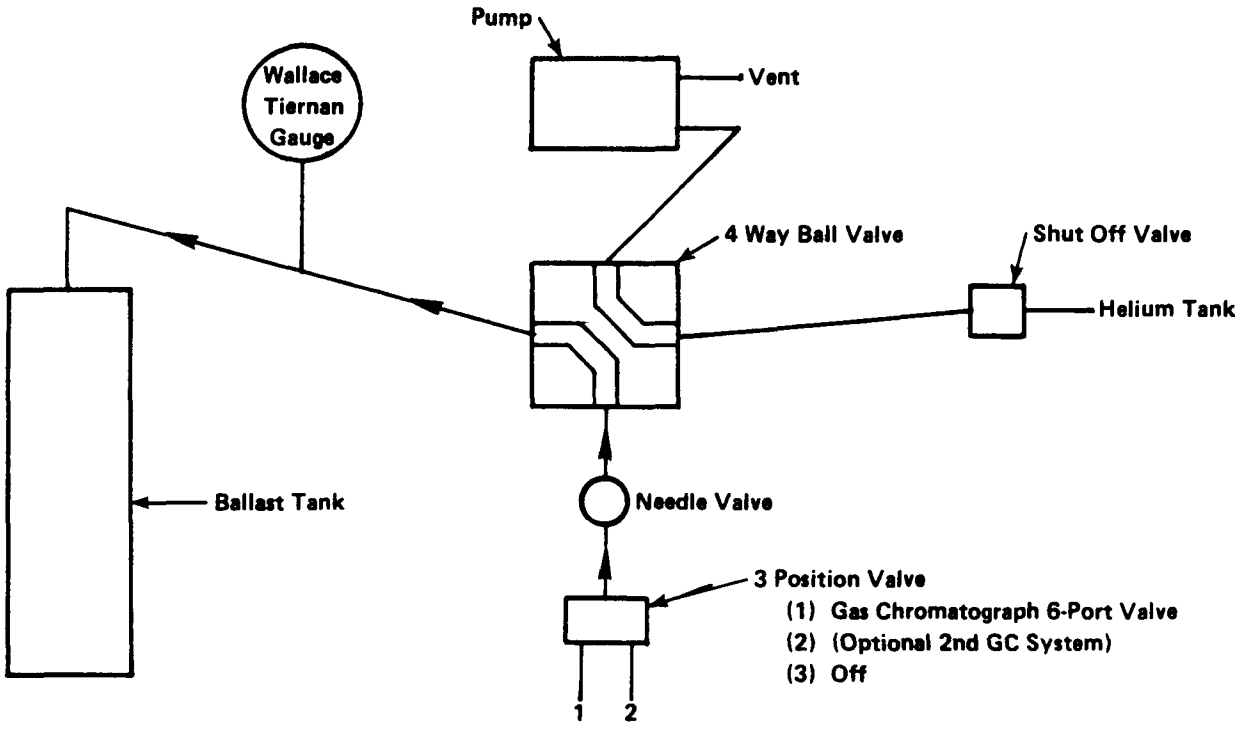

(a) Volume Measuring Position

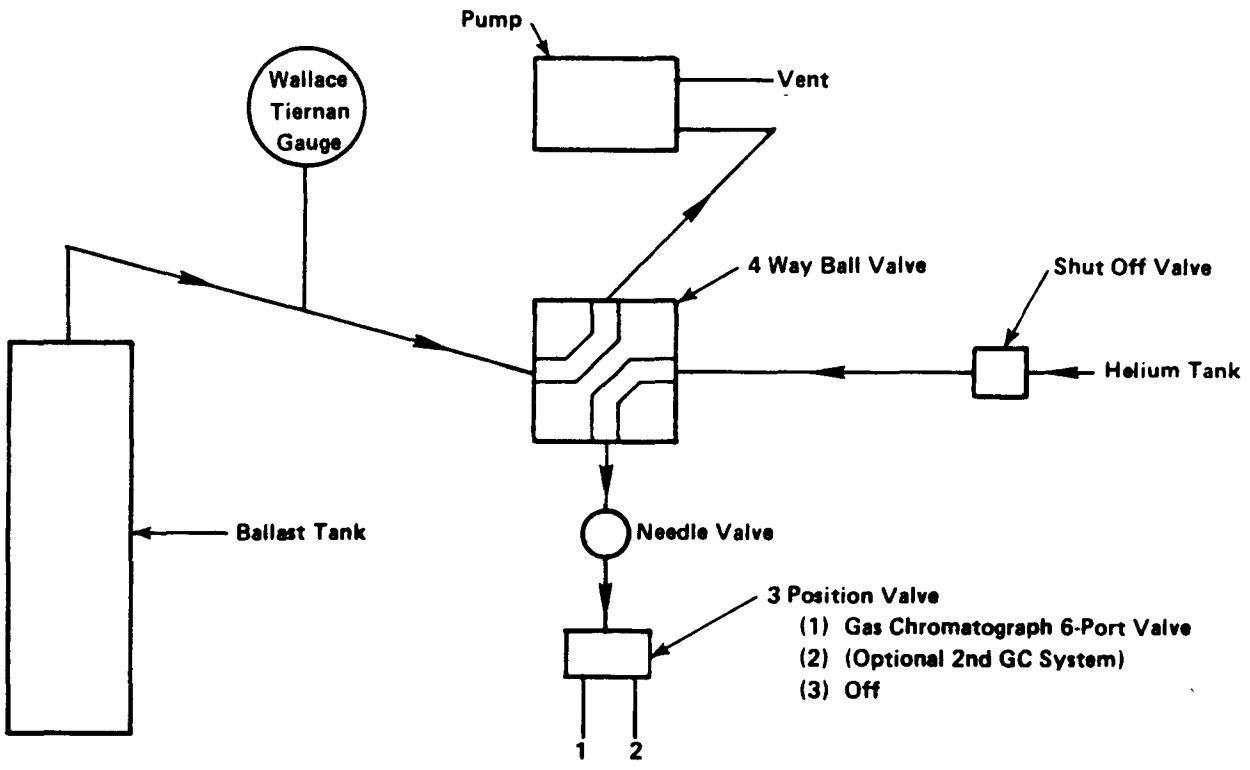

(b) Pump – Down Position

Figure 4. Sample Volume Measuring Apparatus

TABLE 1. VOLATILE ORGANIC COMPOUNDS FOR WHICH THE CRYOGENIC SAMPLING METHOD HAS BEEN EVALUATED[a]

Compound	Retention Time, Minutes[b]	Test 1 (4 runs, 200cc samples) Mean (ppb)	%RSD	Test 2 (8 runs, 200-cc samples) Mean (ppb)	%RSD
Vinylidene Chloride	9.26	144	4.4	6.1	3.9
Chloroform	12.16	84	3.8	3.5	5.8
1,2-Dichloroethane	12.80	44	3.7	1.9	5.1
Methylchloroform	13.00	63	4.5	2.7	4.9
Benzene	13.41	93	4.0	3.9	5.1
Trichloroethylene	14.48	84	3.7	3.5	4.1
Tetrachloroethylene	17.37	69	3.7	2.9	4.3
Chlorobenzene	18.09	46	3.3	1.9	3.2

a)Recovery efficiencies were 100 ± 5% as determined by comparing direct sample loop (5cc) injections with cryogenic collection techniques (using test 1 data). Data from reference 10.

b)GC conditions as follows:

Column - Hewlett Packard, crosslinked methyl silicone, 0.32 mm ID x 50 m long, thick film, fused silica.

Temperature Program - 50°C for 2 minutes, then increased at 8°C/minute to 150°C.

METHOD T04

Revision 1.0
April, 1984

METHOD FOR THE DETERMINATION OF ORGANOCHLORINE PESTICIDES AND POLYCHLORINATED BIPHENYLS IN AMBIENT AIR

1. Scope

1.1 This document describes a method for determination of a variety of organochlorine pesticides and polychlorinated biphenyls (PCBs) in ambient air. Generally, detection limits of >1 ng/m^3 are achievable using a 24-hour sampling period.

1.2 Specific compounds for which the method has been employed are listed in Table 1. Several references are available which provide further details on the development and application of the method. The sample cleanup and analysis methods are identical to those described in U. S. EPA Method 608. That method is included as Appendix A of this methods compendium.

2. Applicable Documents

2.1 ASTM Standards

D1356 Definition of Terms Related to Atmospheric Sampling and Analysis (7).

2.2 Other Documents

Ambient Air Studies (1-3)

U. S. EPA Technical Assistance Document (4).

U. S. EPA Method 608 (5). See Appendix A of methods compendium.

3. Summary of Method

3.1 A modified high volume sampler consisting of a glass fiber filter with a polyurethane foam (PUF) backup absorbent cartridge is used to sample ambient air at a rate of ∿200-280 L/minute.

3.2 The filter and PUF cartridge are placed in clean, sealed containers and returned to the laboratory for analysis. The PCBs and pesticides are recovered by Soxhlet extraction with 5% ether in hexane.

3.3 The extracts are reduced in volume using Kuderna-Danish (K-D) concentration techniques and subjected to column chromatographic cleanup.

3.4 The extracts are analyzed for pesticides and PCBs using gas chromatography with electron capture detection (GC-ECD), as described in U. S. EPA Method 608 (5).

4. Significance

4.1 Pesticides, particularly organochlorine pesticides, are widely used in both rural and urban areas for a variety of applications. PCBs are less widely used, due to extensive restrictions placed on their manufacture. However, human exposure to PCBs continues to be a problem because of their presence in various electrical products.

4.2 Many pesticides and PCBs exhibit bioaccumulative, chronic health effects and hence monitoring ambient air for such compounds is of great importance.

4.3 The relatively low levels of such compounds in the environment requires the use of high volume sampling techniques to acquire sufficient sample for analysis. However, the volatility of these compounds prevents efficient collection on filter media. Consequently, this method utilizes both a filter and a PUF backup cartridge which provides for efficient collection of most organochlorine pesticides, PCBs, and many other organics within the same volatility range.

5. Definitions

Definitions used in this document and any user-prepared SOPs should be consistent with ASTM D1356 (7). All abbreviations

and symbols are defined within this document at the point of use.

6. Interferences

6.1 The use of column chromatographic cleanup and selective GC detection (GC-ECD) minimizes the risk of interference from extraneous organic compounds. However, the fact that PCBs as well as certain organochlorine pesticides (e.g. toxaphene and chlordane) are complex mixtures of individual compounds can cause difficulty in accurately quantifying a particular formulation in a multiple component mixture.

6.2 Contamination of glassware and sampling apparatus with traces of pesticides or PCBs can be a major source of error in the method, particularly when sampling near high level sources (e.g. dumpsites, waste processing plants, etc.) careful attention to cleaning and handling procedures is required in all steps of the sampling and analysis to minimize this source of error.

7. Apparatus

7.1 Hi-Vol Sampler with PUF cartridge - available from General Metal Works (Model PS-1). See Figure 1.

7.2 Sampling Head to contain glass cartridge with PUF plug - available from General Metal Works. See Figure 2.

7.3 Calibration orifice - available from General Metal Works.

7.4 Manometer - to use with calibration orifice.

7.5 Soxhlet extraction system - including Soxhlet extractors (500 and 250 mL), heating mantels, variable voltage transformers, and cooling water source - for extraction of PUF cartridges before and after sampling. Also for extraction of filter samples.

7.6 Vacuum oven connected to water aspirator - for drying extracted PUF cartridges.

7.7 Gas chromatograph with electron capture detector - (consult U. S. EPA Method 608 for specifications).

7.8 Forceps - to handle quartz fiber filter samples.

7.9 Die - to cut PUF plugs.

7.10 Various items for extract preparation, cleanup, and analysis - consult U. S. EPA Method 608 for detailed listing.

7.11 Chromatography column - 2 mm I.D. x 15 cm long - for alumina cleanup.

8. Reagent and Materials

8.1 Polyurethane foam - 3 inch thick sheet stock, polyether type used in furniture upholstering. Density 0.022 g/cm^3.

8.2 Polyester gloves - for handling PUF cartridges and filters

8.3 Filters, quartz fiber - Pallflex 2500 QAST , or equivalent.

8.4 Wool felt filter - 4.9 mg/cm^2 and 0.6 mm thick. To fit sample head for collection efficiency studies. Pre-extracted with 5% diethyl ether in hexane.

8.5 Hexane - Pesticide or distilled in glass grade.

8.6 Diethyl ether - preserved with 2% ethanol - distilled in glass grade, or equivalent.

8.7 Acetone - Pesticide or distilled in glass grade.

8.8 Glass container for PUF cartridges.

8.9 Glass petri dish - for shipment of filters to and from the laboratory.

8.10 Ice chest - to store samples at ∿0°C after collection.

8.11 Various materials needed for extract preparation, cleanup, and analysis - consult U. S. EPA Method 608 for details (Appendix A of this compendium).

8.12 Alumina - activity grade IV. 100/200 mesh

9. Assembly and Calibration of Sampling Apparatus

9.1 Description of Sampling Apparatus

9.1.1 The entire sampling system is diagrammed in Figure 1. This sampler was developed by Syracuse University

Research Corporation (SURC) under a U. S. EPA contract (6) and further modified by Southwest Research Institute and the U. S. EPA. A unit specifically designed for this method is now commercially available (Model PS-1 - General Metal Works, Inc., Village of Cleves, Ohio). The method writeup assumes the use of the commercial device, although the earlier modified device is also considered acceptable.

9.1.2 The sampling module (Figure 2) consists of a glass sampling cartridge and an air-tight metal cartridge holder. The PUF plug is retained in the glass sampling cartridge.

9.2 Calibration of Sampling System

9.2.1 The airflow through the sampling system is monitored by a venturi/Manehelic assembly, as shown in Figure 1. A multipoint calibration of the venturi/magnehelic assembly must be conducted every six months using an audit calibration orifice, as described in the U. S. EPA High Volume Sampling Method (8). A single point calibration must be performed before and after each sample collection, using the procedure described below.

9.2.2 Prior to calibration a "dummy" PUF cartridge and filter are placed in the sampling head and the sampling motor is activated. The flow control valve is fully opened and the voltage variator is adjusted so that a sample flow rate corresponding to ∿110% of the desired flow rate is indicated on the magnehelic (based on the previously obtained multipoint calibration curve). The motor is allowed to warmup for ∿10 minutes and then the flow control valve is adjusted to achieve the desired flow rate. The ambient temperature and barometric pressure should

be recorded on an appropriate data sheet (e.g. Figure 3).

9.2.3 The calibration orifice is then placed on the sampling head and a manometer is attached to the tap on the calibration orifice. The sampler is momentarily turned off to set the zero level of the manometer. The sampler is then switched on and the manometer reading is recorded, once a stable reading is achieved. The sampler is then shut off.

9.2.4 The calibration curve for the orifice is used to calculate sample flow from the data obtained in 9.2.3, and the calibration curve for the venturi/ magnehelic assembly is used to calculate sample flow from the data obtained in 9.2.2. The calibration data should be recorded on an appropriate data sheet (e.g. Figure 3). If the two values do not agree within 10% the sampler should be inspected for damage, flow blockage, etc. If no obvious problems are found the sampler should be recalibrated (multipoint) according to the U. S. EPA High Volume Sampling procedure (8).

9.2.5 A multipoint calibration of the calibration orifice, against a primary standard, should be obtained annually.

10. Preparation of Sampling (PUF) Cartridges

10.1 The PUF adsorbent is a polyether-type polyurethane foam (density No. 3014 or 0.0225 g/cm^3). This type of foam is used for furniture upholstery. It is white and yellows on exposure to light.

10.2 The PUF inserts are 6.0 cm diameter cylindrical plugs cut from 3 inch sheet stock and should fit with slight compression in the glass cartridge, supported by the wire

screen. See Figure 2. During cutting the die is rotated at high speed (e.g. in a drill press) and continuously lubricated with water.

10.3 For initial cleanup the PUF plug is placed in a Soxhlet extractor and extracted with acetone for 14-24 hours at approximately 4 cycles per hour. When cartridges are reused, 5% diethyl ether in n-hexane can be used as the cleanup solvent.

10.4 The extracted PUF is placed in a vacuum oven connected to a water aspirator and dried at room temperature for approximately 2-4 hours (until no solvent odor is detected).

10.5 The PUF is placed into the glass sampling cartridge using polyester gloves. The module is wrapped with hexane rinsed aluminum foil, placed in a labeled container and tightly sealed.

10.6 Other adsorbents may be suitable for this method as indicated in the various references (1-3). If such materials are employed the user must define appropriate preparation procedures based on the information contained in these references.

10.7 At least one assembled cartridge from each batch must be analyzed, as a laboratory blank, using the procedures described in Section 12, before the batch is considered acceptable for field use. A blank level of <10 ng/plug for single compounds is considered to be acceptable. For multiple component mixtures (e.g. Arochlors) the blank level should be <100 ng/plug.

11. Sampling

11.1 After the sampling system has been assembled and calibrated as described in Section 9 it can be used to collect air samples as described below.

11.2 The samples should be located in an unobstructed area, at least two meters from any obstacle to air flow. The exhaust hose should be stretched out in the downwind

direction to prevent recycling of air.

11.3 A clean sampling cartridge and quartz fiber filter are removed from sealed transport containers and placed in the sampling head using forceps and gloved hands. The head is tightly sealed into the sampling system. The aluminum foil wrapping is placed back in the sealed container for later use.

11.4 The zero reading of the Magnehelic is checked. Ambient temperature, barometric pressure, elapsed time meter setting, sampler serial number, filter number and PUF cartridge number are recorded. A suitable data sheet is shown in Figure 4.

11.5 The voltage variator and flow control valve are placed at the settings used in 9.2.3 and the power switch is turned on. The elapsed time meter is activated and the start time recorded. The flow (Magnehelic setting) is adjusted, if necessary using the flow control valve.

11.6 The Magnehelic reading is recorded every six hours during the sampling period. The calibration curve (Section 9.2.7) is used to calculate the flow rate. Ambient temperature and barometric pressure are recorded at the beginning and end of the sampling period.

11.7 At the end of the desired sampling period the power is turned off and the filter and PUF cartridges are wrapped with the original aluminum foil and placed in sealed, labeled containers for transport back to the laboratory.

11.8 The Magnehelic calibration is checked using the calibration orifice as described in Section 9.2.4. If the calibration deviates by more than 10% from the initial reading the flow data for that sample must be marked as suspect and the sampler should be inspected and/or removed from service.

11.9 At least one field blank will be returned to the laboratory with each group of samples. A field blank is treated exactly as a sample except that no air is drawn through the cartridge.

11.10 Samples are stored at ∿20°C in an ice chest until receipt at the analytical laboratory, at which time they are stored refrigerated at 4°C.

12. Sample Preparation and Analysis

12.1 Sample Preparation

12.1.1 All samples should be extracted within 1 week after collection.

12.1.2 PUF cartridges are removed from the sealed con-container using gloved hands, the aluminum foil wrapping is removed, and the cartridges are placed into a 500-mL Soxhlet extraction. The cartridges are extracted for 14-24 hours at ∿4 cycles/hour with 5% diethyl ether in hexane. Extracted cartridges can be dried and reused following the handling procedures in Section 10. The quartz filter can be placed in the extractor with the PUF cartridges. However, if separate analysis is desired then one can proceed with 12.1.3.

12.1.3 If separate analysis is desired, quartz filters are placed in a 250-mL Soxhlet extractor and extracted for 14-24 hours with 5% diethyl ether in hexane.

12.1.4 The extracts are concentrated to 10 mL final volume using 500-mL Kuderna-Danish concentrators as described in EPA Method 608 (5), using a hot water bath. The concentrated extracts are stored refrigerated in sealed 4-dram vials having teflon-lined screw-caps until analyzed or subjected to cleanup.

12.2 Sample Cleanup

12.2.1 If only organochlorine pesticides and PCBs are sought, an alumina cleanup procedure reported in the literature is appropriate (1). Prior to cleanup the sample

extract is carefully reduced to 1 mL using a gentle steam of clean nitrogen.

12.2.2 A glass chromatographic column (2 mm ID x 15 cm long) is packed with alumina, activity grade IV and rinsed with ∿20 mL of n-hexane. The concentrated sample extract (from 12.2.1) is placed on the column and eluted with 10 mL of n-hexane at a rate of 0.5 mL/minute. The eluate volume is adjusted to exactly 10 mL and analyzed as described in 12.3.

12.2.3 If other pesticides are sought, alternate cleanup procedures (e.g. Florisil) may be required. Method 608 (5) identifies appropriate cleanup procedures.

12.3 Sample Analysis

12.3.1 Sample analysis is performed using GC/ECD as described in EPA Method 608 (5). The user must consult this method for detailed analytical procedures.

12.3.2 GC retention times and conditions are identified in Table 1 for the compounds of interest.

13. GC Calibration

Appropriate calibration procedures are identified in EPA Method 608 (5).

14. Calculations

14.1 The total sample volume (V_m) is calculated from the periodic flow readings (Magnehelic) taken in Section 11.6 using the following equation.

$$V_m = \frac{Q_1 + Q_2 \cdots Q_N}{N} \times \frac{T}{1000}$$

where

V_m = Total sample volume (m^3).

Q_1, $Q_2 \ldots Q_N$ = Flow rates determined at the beginning, end, and intermediate points during sampling (L/minute).

N = Number of data points averaged.

T = Elapsed sampling time (minutes).

14.2 The volume of air sampled can be converted to standard conditions (760 mm Hg pressure and 25°C) using the following equation:

$$V_s = V_m \times \frac{P_A}{760} \times \frac{298}{273+t_A}$$

where

V_s = Total sample volume at 25°C and 760 mm Hg pressure (m^3)

V_m = Total sample flow under ambient conditions (m^3)

P_A = Ambient pressure (mm Hg)

t_A = Ambient temperature (°C)

14.3 The concentration of compound in the sample is calculated using the following equation:

$$C_A = \frac{A \times V_E}{V_i \times V_s}$$

where

C_A = Concentration of analyte in the sample, $\mu g/m^3$

A = Calculated amount of material injected onto the chromatograph based on calibration curve for injected standards (nanograms)

V_i = Volume of extract injected (μL).

V_E = Final volume of extract (mL).
V_s = Total volume of air samples corrected to standard conditions (m^3).

14. Performance Criteria and Quality Assurance

This section summarizes the quality assurance (QA) measures and provides guidance concerning performance criteria which should be achieved within each laboratory.

14.1 Standard Operating Procedures (SOPs)

14.1.1 Users should generate SOPs describing the following activities as accomplished in their laboratory: 1) assembly, calibration and operation of the sampling system, 2) preparation, purification, storage and handling of sampling cartridges, 3) assembly, calibration and operation of the GC/ECD system, and 4) all aspects of data recording and processing.

14.1.2 SOPs should provide specific stepwise instructions and should be readily available to, and understood by, the laboratory personnel conducting the work.

14.2 Process, Field, and Solvent Blanks

14.2.1 One PUF cartridge and filter from each batch of approximately twenty should be analyzed, without shipment to the field, for the compounds of interest to serve as a process blank.

14.2.2 During each sampling episode at least one PUF cartridge and filter should be shipped to the field and returned, without drawing air through the sampler, to serve as a field blank.

14.2.3 During the analysis of each batch of samples at least one solvent process blank (all steps conducted but no PUF cartridge or filter included) should be

carried through the procedure and analyzed.

14.2.4 Blank levels should not exceed ∿10 ng/sample for single components or ∿100 ng/sample for multiple component mixtures (e.g. PCBs).

14.3 Collection Efficiency and Spike Recovery

14.3.1 Before using the method for sample analysis each laboratory must determine their collection efficiency for the components of interest.

14.3.2 The glass fiber filter in the sampler is replaced with a hexane-extracted wool felt filter (weight 14.9 mg/cm^2, 0.6 mm thick). The filter is spiked with microgram amounts of the compounds of interest by dropwise addition of hexane solutions of the compounds. The solvent is allowed to evaporate and filter is placed into the sampling system for immediate use.

14.3.3 The sampling system, including a clean PUF cartridge, is activated and set at the desired sampling flow rate. The sample flow is monitored for 24 hours.

14.3.4 The filter and PUF cartridge are then removed and analyzed as described in Section 12.

14.3.5 A second sample, unspiked is collected over the same time period to account for any background levels of components in the ambient air matrix.

14.3.6 A third PUF cartridge is spiked with the same amounts of the compounds used in 14.3.2 and extracted to determine analytical recovery.

14.3.7 In general analytical recoveries and collection efficiencies of 75% are considered to be acceptable method performance.

14.3.8 Replicate (at least triplicate) determinations of collection efficiency should be made. Relative standard deviations for these replicate determinations of ± 15% or less is considered acceptable performance.

14.3.9 Blind spiked samples should be included with sample sets periodically, as a check on analytical performance.

14.4 Method Precision and Accuracy

Typical method recovery data are shown in Table 1. Recoveries for the various chlorobiphenyls illustrate the fact that all components of an Arochlor mixture will not be retained to the same extent. Recoveries for tetrachlorobiphenyls and above are generally greater than 85% but di- and trichloro homologs may not be recovered quantitatively.

REFERENCES

1. Lewis, R. G., Brown, A. R., and Jackson, M. D., "Evaluation of Polyurethane Foam for Sampling of Pesticides, Polychlorinated Biphenyls, and Polychlorinated Naphthalenes in Ambient Air", Anal. Chem. 49, 1668-1672, 1977.

2. Lewis, R. G. and Jackson, M. D., "Modification and Evaluation of a High-Volume Air Sampler for Pesticides and Semivolatile Industrial Organic Chemicals", Anal. Chem. 54, 592-594, 1982.

3. Lewis, R. G., Jackson, M. D., and MacLeod, K. E., "Protocol for Assessment of Human Exposure to Airborne Pesticides", EPA-600/2-80-180, U.S. Environmental Protection Agency, Research Triangle Park, NC, 1980.

4. Riggin, R. M., "Technical Assistance Document for Sampling and Analysis of Toxic Organic Compounds in Ambient Air", EPA-600/4-83-027., U. S. Environmental Protection Agency, Research Triangle Park, NC, 1983.

5. Longbottom, J. E. and Lichtenberg, J. J., "Methods for Organic Chemical Analysis of Municipal and Industrial Wastewater", EPA-600/4-82-057, U. S. Environmental Protection Agency, Cincinnati, OH, 1982.

6. Bjorkland, J., Compton, B., and Zweig, G., "Development of Methods for Collection and Analysis of Airborne Pesticides." Report for Contract No. CPA 70-15, National Air Pollution Control Association, Durham, NC, 1970.

7. Annual Book of ASTM Standards, Part 11.03, "Atmospheric Analysis", American Society for Testing and Materials, Philadelphia, PA, 1983.

8. Reference Method for the Determination of Suspended Particulates in the Atmosphere (High Volume Method). Federal Register, Sept. 14, 1972 or 40CFR50 Appendix B.

TABLE 1. SELECTED COMPONENTS DETERMINED USING HI-VOL/PUF SAMPLING PROCEDURE

Compound	GC Retention Time, Minutes[a]	24-Hour Sampling Efficiency[b]	
		Air Concentration ng/m^3	% Recovery
Aldrin	2.4	0.3-3.0	28
4,4'-DDE	5.1	0.6-6.0	89
4,4'-DDT	9.4	1.8-18	83
Chlordane	(c)	15-150	73
Chlorobiphenyls			
4,4' Di-	--	2.0-20	62
2,4,5 Tri-	---	0.2-2.0	36
2,4',5 Tri-	--	0.2-2.0	86
2,2',5,5' Tetra-	--	0.2-2.0	94
2,2',4,5,5' Penta-	--	0.2-2.0	92
2,2',4,4',5,5' Hexa	--	0.2-2.0	86

(a) Data from U.S. EPA Method 608. Conditions are as follows:

Stationary Phase - 1.5% SP2250/1.95% SP-2401 on Supelcoport (100/120 mesh) packed in 1.8 mm long x 4 mm ID glass column.

Carrier - 5/95 methane/Argon at 60 mL/Minute

Column Temperature - 160°C except for PCBs which are determined at 200°C.

(b) From Reference 2.

(c) Multiple component formulation. See U.S. EPA Method 608.

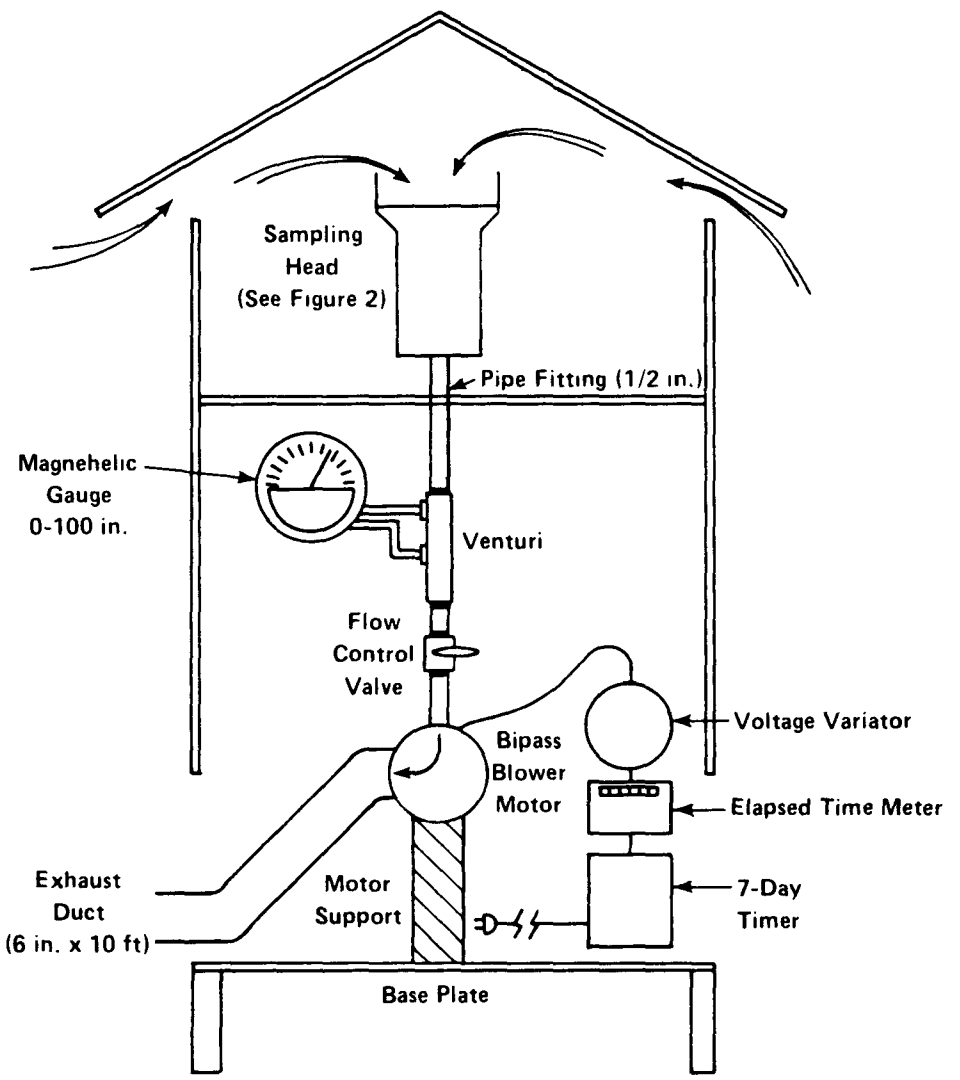

FIGURE 1. HIGH VOLUME AIR SAMPLER. AVAILABLE FROM GENERAL METAL WORKS (MODEL PS-1)

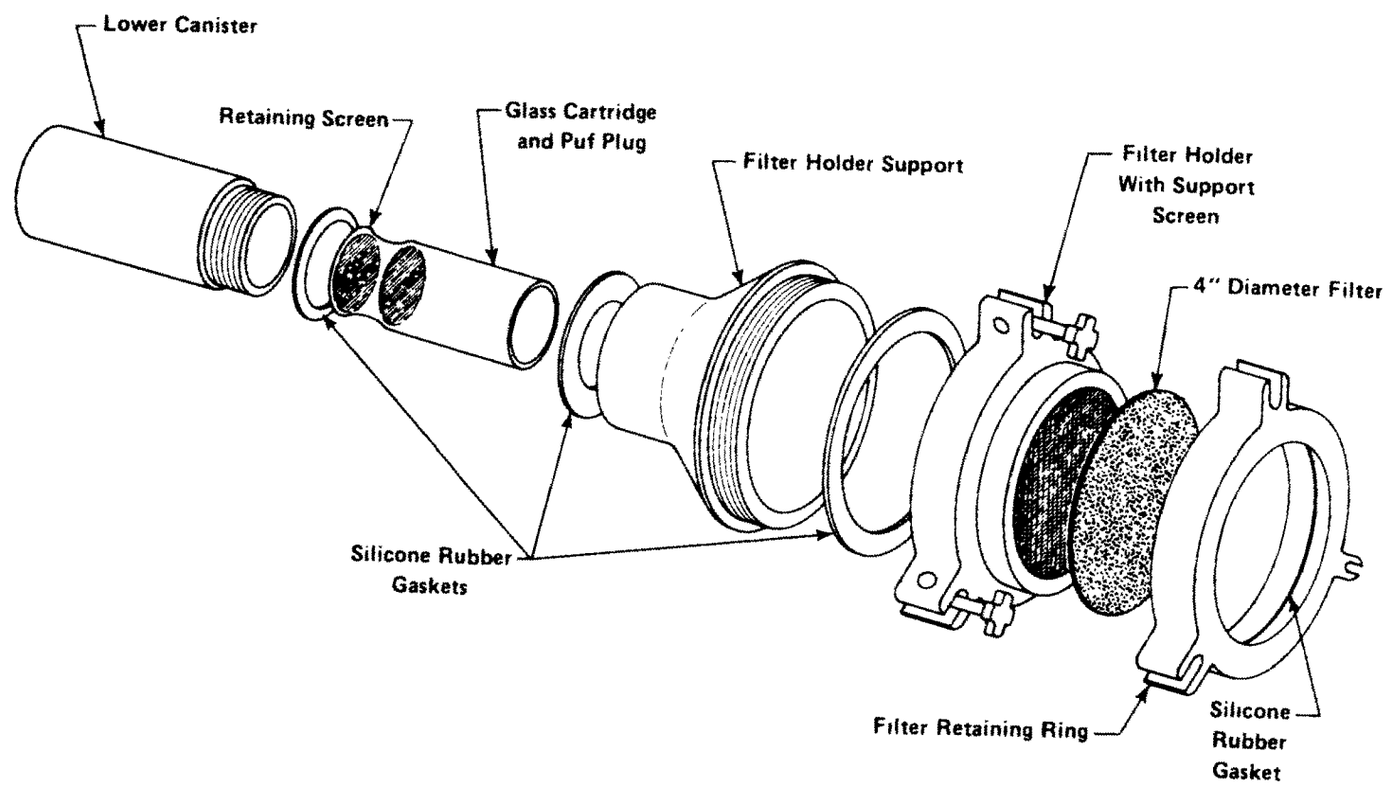

FIGURE 2. SAMPLING HEAD

T04-18

Performed by_____ Calibration Orifice S/N_____ Ambient Temperature_____°C

Date/Time_____ Manometer S/N _____ Bar.Press. _____ mm Hg

Sampler S/N	Variac Setting V	Timer OK? Yes/No	Calibration Orifice Data		Sampler Venturi Data		% Difference Between Calibration and Sample Venturi Flow Rates	Comments
			Manometer, in. H_2O	Flow Rate, scm /min[a]	Magnehelic, in. H_2O	Flow Rate scm/min [b]		

(a) From Calibration Tables for Calibration Orifice or Venturi Tube

(b) From Calibration Tables for Venturi Tube in each Hi-Vol unit. Date check by_____ Date_____

FIGURE 3. TYPICAL CALIBRATION SHEET FOR HIGH VOLUME SAMPLER

Site _____ Date _____ Performed by _____

Sampler S/N	Sampling Location I D	New Filter (√)	PUF Cart No	Variac Setting	Clock Time			Sampler Timer			Venturi Readings Time/Magnehelic in H_2O				Ambient Temperature, °C		Barometric Pressure mm Hg		Comments
					Start, hr CDT	Stop, hr CDT	Min Elapsed	Start, min	Stop min	Min Elapsed	1	2	3	4	Start	Stop	Start	Stop	

(a) Record any evidence of tampering with sampler and/or abnormalities in sampler operation, PUF cartridge condition or handling, etc

Data Checked By _____ Date _____

FIGURE 4. TYPICAL SAMPLING DATA FORM FOR HIGH VOLUME PESTICIDE/PCB SAMPLER

METHOD FOR THE DETERMINATION OF ALDEHYDES AND KETONES IN AMBIENT AIR USING HIGH PERFORMANCE LIQUID CHROMATOGRAPHY (HPLC)

1. Scope

1.1 This document describes a method for determination of individual aldehydes and ketones in ambient air. With careful attention to reagent purity and other factors the method can detect most monofunctional aldehydes and ketones at the 1-2 ppbv level.

1.2 Specific compounds for which the method has been employed are listed in Table 1. Several studies have used the same basic method, with minor procedural differences, for analysis of ambient air (1-3).

2. Applicable Documents

2.1 ASTM Standards:
D 1356 Definitions of Terms Related to Atmospheric Sampling and Analysis (s)

2.2 Other Documents
Ambient air studies (1-3).
U.S. EPA Technical Assistance Document (4)

3. Summary of Method

3.1 Ambient air is drawn through a midget impinger containing 10 mL of 2N HCl/0.05% 2,4-dinitrophenylhydrazine (DNPH reagent) and 10 mL of isooctane. Aldehydes and ketones readily form stable 2,4-dinitrophenylhydrazones (DNPH derivatives).

3.2 The impinger solution is placed in a screw-capped vial having a teflon-lined cap and returned to the laboratory for analysis. The DNPH derivatives are recovered by removing the isooctane layer, extracting the aqueous layer with 10 mL of 70/30 hexane/methylene chloride, and combining the organic layers.

3.3 The combined organic layers are evaporated to dryness under a steam of nitrogen and the residue dissolved in methanol.

3.4 The DNPH derivatives are determined using reversed phase HPLC with an ultraviolet (UV) adsorption detector operated at 370 nm.

4. Significance

4.1 Aldehydes and ketones are emitted into the atmosphere from chemical operations and various combustion sources. In addition, several of these compounds (e.g. formaldehyde and acetaldehyde) are produced by photochemical degradation of other organic compounds. Many of these compounds are acutely toxic and/or carcinogenic, thus requiring their determination in ambient air in order to assess human health impacts.

4.2 Conventional methods for aldehydes and ketones have generally employed colorimetric techniques wherein only one or two compounds are detected, or the sum of numerous compounds is determined. The method described herein provides a means for specifically determining a wide variety of aldehydes and ketones at typical ambient concentrations.

5. Definitions

Definitions used in this document and any user prepared SOPs should be consistent with ASTM D1356(5). All abbreviations and symbols are defined within this document at the point of use.

6. Interferences

6.1 The only significant interferences in the method are certain isomeric aldehydes or ketones which may be unresolved by the HPLC system. Such interferences can often be overcome by altering the separation conditions (e.g. using alternate HPLC columns or mobile phase compositions).

6.2 Formaldehyde contamination of the DNPH reagent is a frequently encountered problem. The reagent must be prepared within 48 hours before use and must be stored in an uncontaminated environment before and after sampling to minimize blank problems. Acetone contamination is apparently unavoidable. Consequently, the method cannot be used to accurately measure acetone levels except in highly contaminated environments.

7. Apparatus

7.1 Isocratic HPLC system-consisting of high pressure pump, injection valve, Zorbax ODS column (25 cm x 4.6 mm ID), variable wavelength UV detector, and data system or stripchart recorded. See Figure 3.

7.2 Sampling system-capable of accurately and precisely sampling 100-1000 mL/minute of ambient air. See Figure 1.

7.3 Stopwatch

7.4 Friction top metal can e.g. one-gallon (paint can) - to hold DNPH reagent and samples

7.5 Thermometer - to record ambient temperature.

7.6 Barometer (optional)

7.7 Analytical balance - 0.1 mg sensitivity

7.8 Reciprocating shaker

7.9 Midget impingers - jet inlet type - 25 mL volume.

7.10 Ice bath - for cooling impingers during sampling.

7.11 Nitrogen evaporator with heating block - for concentrating samples

7.12 Suction filtration apparatus - for filtering HPLC mobile phase.

7.13 Volumetric flasks - 100 mL and 500 mL.

7.14 Pipettes - various sizes, 1-10 mL.

7.15 Helium purge line (optional) - for degassing HPLC mobile phase.

7.16 Erlenmeyer flask, 1-liter - for preparing HPLC mobile phase.

7.17 Graduated cylinder, 1 liter - for preparing HPLC mobile phase.

7.18 Microliter syringe, 10-25 µL - for HPLC injector.

8. Reagents and Materials

8.1 Bottles, 10 oz. glass, with teflon-lined screw cap - for storing DNPH reagent.

8.2 Vials, 50 mL, with teflon-lined screw cap - for holding samples and extracts.

8.3 Disposable pipettes and bulbs.

8.4 Granular charcoal.

8.5 Methanol, hexane, methylene chloride, isooctane - distilled in glass or pesticide grade.

8.6 2,4-Dinitrophenylhydrazine - highest purity available (20% moisture).

8.7 Nitrogen, compressed gas cylinder - 99.99% purity for sample evaporation.

8.8 Polyester filters, 0.22 µm - Nuclepore or equiv.

8.9 DNPH derivatives of the components of interest - synthesized from DNPH and neat aldehydes according to reference (7). Recrystallized from ethanol before use.

9. Preparation of DNPH Reagent

9.1 Each batch of DNPH reagent should be prepared and purified within 48 hours of sampling, according to the procedure described in this section.

9.2 Two hundred and fifty milligrams of solid 2,4-dinitrophenylhydrazine and 90 mL of concentrated hydrochloric acid are placed into a 500 mL volumetric flask and the flask is filled to the mark with reagent water. The flask is then inverted several times or sonified until all of the solid material has dissolved.

9.3 Approximately 400 mL of the DNPH reagent is placed in a 16 ounce glass screw-capped bottle having a teflon-lined cap. Approximately 50 mL of a 70/30 (V/V) hexane/methylene chloride mixture is added to the bottle and the capped bottle is shaken for 15 minutes on a reciprocating shaker. The organic layer is then removed and discarded by decanting as much as possible and using a disposable pipette to remove the remaining organic layer.

9.4 The DNPH reagent is extracted two more times as described in 9.3. The bottle is then tightly capped, sealed with teflon tape, and placed in a friction top can (paint can) containing a 1-2 inch layer of granulated charcoal. The bottle is kept in the sealed can prior to use.

9.5 A portion of the DNPH reagent is analyzed using the procedure described in Section 11 prior to use in order to ensure that adequate background levels are maintained.

10. Sampling

10.1 The sampling apparatus is assembled and should be similar to that shown in Figure 1. EPA Method 6 uses essentially the same sampling system (8). All glassware (e.g. impingers, sampling bottles, etc.) must be thoroughly rinsed with methanol and oven dried before use.

10.2 Prior to sample collection the entire assembly (including empty sample impingers) is installed and the flow rate checked at a value near the desired rate. In general flow rates of 100-1000 mL/minute are useful. Flow rates greater than ∿1000 mL/minute should not be used because impinger collection efficiency may decrease. Generally calibration is accomplished using a soap bubble flow meter or calibrated wet test meter connected to the flow exit, assuming the entire system is sealed. ASTM Method D3686 describes an appropriate calibration scheme not requiring a sealed flow system downstream of the pump.

10.3 Ideally a dry gas meter is included in the system to record total flow. If a dry gas meter is not available the operator must measure and record the sampling flow rate at the beginning and end of the sampling period to determine sample volume. If the sampling period exceeds two hours the flow rate should be measured at intermediate points during the sampling period. Ideally a rotameter should be included to allow observation of the flow rate without interruption of the sampling process.

10.4 To collect an air sample two clean midget impingers are loaded with 10 mL of purified DNPH reagent and 10 mL of isooctane. The impingers are connected in series to the sampling system and sample flow is started. The following parameters are recorded on the data sheet (see Figure 3 for an example): date, sampling location, time, ambient temperature, barometric pressure (if available), relative humidity (if available), dry gas meter reading (if appropriate), flow rate, rotometer setting, DNPH reagent batch number, and dry gas meter and pump identification numbers.

10.5 The sampler is allowed to operate for the desired period, with periodic recording of the variables listed above. The total flow should not exceed ∿80 liters. The operator must ensure that at least 2-3 mL of isooctane remains in the first impinger at the end of the sampling interval (i.e. for high ambient temperatures lower sampling volumes may be required).

10.6 At the end of the sampling period the parameters listed in 10.4 are recorded and the sample flow is stopped. If a dry gas meter is not used the flow rate must be checked at the end of the sampling interval. If the flow rate at the beginning and end of the sampling period differ by more than 15% the sample should be marked as suspect.

10.7 Immediately after sampling the impingers are removed from the sampling system. The contents of the first impinger are emptied into a clean 50 mL glass vial having a teflon-lined screw cap. The first impinger is then rinsed with the contents of the second (backup) impinger and the rinse solution is added to the vial. The vial is then capped, sealed with teflon tape and placed in a friction top can containing 1-2 inches of granular charcoal. The samples are stored in the can, refrigerated until analysis.

10.8 If a dry gas meter or equivalent total flow indicator is not used the average sample flow rate must be calculated according to the following equation:

$$Q_A = \frac{Q_1 + Q_2 \cdots Q_N}{N}$$

where

Q_A = Average flow rate in mL/minute.

$Q_1, Q_2, \ldots Q_N$ = Flow rates determined at the beginning, end, and intermediate points during sampling.

N = Number of points averaged.

10.9 The total flow is then calculated using the following equation:

$$V_m = \frac{(T_2 - T_1)Q_A}{1000}$$

V_m = Total volume sampled in liters at measured temperature and pressure

T_2 = Stop time

T_1 = Start time ($T_2 - T_1$ given in minutes)

11. Sample Analysis

11.1 Sample Preparation

11.1.1 The samples are returned to the laboratory in 50 mL screw-capped glass vials. To recover the DNPH derivatives the following procedure is employed.

11.1.2 The vials are shaken in a horizontal position on a reciprocating shaker for 10 minutes. The vials are then removed from the shaker and the isooctane layer is removed and placed in a second clean 50 mL screw-capped glass vial using a disposable pipette.

11.1.3 The remaining aqueous layer is extracted with 10 mL of 70/30 (V/V) hexane/methylene chloride in the same manner as described in 11.1.2. The organic layer is removed and combined with the isooctane extract.

11.1.4 The combined organic extracts are then concentrated to dryness at 40°C under a steam of pure nitrogen. When the sample just reaches dryness the vial is removed from the nitrogen stream and a measured volume (2-5 mL) of methanol is added to the vial. The vial is tightly capped and stored refrigerated until analysis.

11.2 HPLC Analysis

11.2.1 The instrument is assembled and calibrated as described in Section 12. Prior to each analysis the detector baseline is checked to ensure stable operation.

11.2.2 A 5-25 µL aliquot of the sample, dissolved in methanol, is drawn into a clean HPLC injection syringe. The sample injection loop is loaded and an injection is made. The data system, if available, is activated simultaneously with the injection and the point of injection is marked on the stripchart recorder.

11.2.3 After approximately one minute, the injection valve is returned to "load" position and the syringe and valve are flushed with methanol in preparation for the next sample analysis.

11.2.4 After elution of the last component of interest the acquisition is terminated and the component concentrations are calculated as described in Section 13.

11.2.5 After a stable baseline is achieved the system can be used for further sample analyses as described above.

11.2.6 If the concentration of a component exceeds the linear range of the instrument the sample should be diluted with methanol, or a smaller volume can be injected onto the HPLC.

12. HPLC Assembly and Calibration

12.1 The HPLC system is assembled as shown in Figure 3. The typical chromatographic performance and operating parameters are shown in Figure 4.

12.2 Mobile phase is prepared by mixing 800 mL of methanol and 200 mL of reagent water. This mixture is filtered through a 0.22 µm polyester membrane filter in an all glass and teflon suction filtration apparatus. The filtered mobile phase is degassed by purging with helium gas for 10-15 minutes (∿ 100 mL/minute) or by heating to ∿60°C for 5-10 minutes in an Erlenmeyer flask covered with a watch glass. A constant back pressure restrictor (∿ 50 psi) or short length (6-12 inches) of 0.01 inch I.D. teflon tubing should be placed after the detector to further eliminate mobile phase outgassing.

12.3 The mobile phase is placed in the HPLC solvent reservoir and the pump flow is set at 1 mL/minute and allowed to pump for 20-30 minutes prior to the first analysis. The detector is switched on at least 30 minutes prior to the first analysis and the detector output is displayed on a stripchart recorder or similar output device at a sensitivity of .008

absorbance units full scale (AUFS). Once a stable baseline is achieved the system is ready for calibration.

12.4 Calibration standards are prepared in methanol from the solid DNPH derivatives. Individual stock solutions of ∿ 100 mg/L are prepared by dissolving 10 mg of the solid derivative in 100 mL of methanol. These individual solutions are used to prepare calibration standards containing all of the derivatives of interest at concentrations of 0.1 - 10 mg/L, which spans the concentration of interest for most ambient air work.

12.5 All calibration runs are performed as described for sample analyses in Section 11. Before initial use the operator should inject a series of calibration standards (at least three levels) spanning the concentration range of interest. Using the UV detector, a linear response range of approximately 0.1 to 10 mg/L should be achieved, for ∿ 10 μL injection volumes. Linear response is indicated where a correlation coefficient of a least 0.999 for a linear least squares fit of the data (concentration versus area response) is obtained.

12.6 Once linear response has been documented an intermediate concentration standard near the anticipated levels for each component, but at least 10 times the detection limit, should be chosen for daily calibration. The response for the various DNPH components should be within 10% day to day. If greater variability is observed more frequent calibration may be required to ensure that valid results are obtained.

12.7 The response for each component in the daily calibration standard is used to calculate a response factor according to the following equation:

$$RF_C = \frac{C_C \times V_I}{R_C}$$

where

RF_c = response factor for the component of interest in nanograms injected/response unit (usually area counts).

C_c = concentration of component in the daily calibration standard (mg/L).

V_I = volume of calibration standard injected (µL).

R_c = response for component of interest in calibration standard (area counts).

13. Calculations

13.1 The volume of air sampled is often reported uncorrected for atmospheric conditions (i.e. under ambient conditions). However, the value can be adjusted to standard conditions (25°C and 760 mm pressure) using the following equation:

$$V_s = V_m \times \frac{P_A}{760} \times \frac{298}{273 + T_A}$$

where

V_s = total sample volume at 25°C and 760 mm Hg pressure (liters).

V_m = total sample volume under ambient conditions (liters). Calculated in 10.9 or from dry gas meter reading.

P_A = ambient pressure (mmHg).

T_A = ambient temperature (°C).

13.2 The concentration of each aldehyde (as the DNPH derivative is calculated for each sample using the following equation:

$$W_d = RF_c \times R_d \times \frac{V_E}{V_I}$$

where

W_d = total quantity of derivative in the sample (μg).

RF_c = response factor calculated in 12.7

R_d = response for component in sample extract (area counts or other response units).

V_E = final volume of sample extract (mL).

V_I = volume of extract injected onto the HPLC system (μL).

13.3 The concentration of aldehyde in the original sample is calculated from the following equation:

$$C_A = \frac{W_d}{V_m \text{ (or } V_s \text{)}} \times \frac{MW_A}{MW_d} \times 1000$$

where

C_A = concentration of aldehyde in the original sample (ng/L).

V_m or V_s are as specified in Section 13.1.

MW_A and MW_d are the molecular weights (g/mole) of the aldehyde and its corresponding DNPH derivative, respectively.

13.4 The aldehyde concentrations can be converted to ppbv using the following equation:

$$C_A(\text{ppbv}) = C_A(\text{ng/L}) \times \frac{24.4}{MW_A}$$

where

C_A(ng/L) is calculated using V_s.

14. Performance Criteria and Quality Assurance

This section summarizes the quality assurance (QA) measures and provides guidance concerning performance criteria which should be achieved within each laboratory.

14.1 Standard Operating Procedures (SOPs).

14.1.1 Each user should generate SOPs describing the following activities as accomplished in their laboratory: 1) assembly, calibration and operation of the sampling system, 2) preparation, purification, storage and handling of DNPH reagent and samples, 3) assembly, calibration and operation of the HPLC system, and 4) all aspects of data recording and processing.

14.1.2 SOPs should provide specific stepwise instructions and should be readily available to, and understood by, the laboratory personnel conducting the work.

14.2 HPLC System Performance

14.2.1 The general appearance of the HPLC chromatograph should be similar to that shown in Figure 4.

14.2.2 The HPLC system efficiency and peak asymmetry factor should be determined in the following manner. A solution of the formaldehyde DNPH derivative corresponding to at least 20 times the detection limit should be injected with the recorder chart sensitivity and speed set to yield a peak approximately 75% of full scale and 1 cm wide at half height. The peak asymmetry factor is determined as shown in Figure 5, and should be between 0.8 and 1.8.

14.2.3 HPLC system efficiency is calculated according to the following equation:

$$N = 5.54 \left(\frac{t_r}{W_{1/2}} \right)$$

where

N = column efficiency, theoretical plates
t_r = retention time of components (seconds)
$W_{1/2}$ = width of component peak at half height (seconds)

A column efficiency of >5,000 should be obtained.

14.2.4 Precision of response for replicate HPLC injections should be ± 10% or less, day to day, for calibration standards. Precision of retention times should be ± 2%, on a given day.

14.3 Process Blanks

14.3.1 Prior to use a 10 mL aliquot of each batch of DNPH reagent should be analyzed as described in Section 11. In general, formaldehyde levels equivalent to >5 ng/L in a 60 liter sample should be achieved and other aldehyde levels should be <1 ng/L.

14.3.2 At least one field blank should be shipped and analyzed with each group of samples. The field blank is treated identically to the samples except that no air is drawn through the reagent. The same performance criteria described in 14.3.1 should be met for process blanks.

14.4 Method Precision and Accuracy

14.4.1 Analysis of replicate samples indicates a precision of ± 15-20% relative standard deviation can be readily achieved. Each laboratory should collect parallel samples periodically (at least one for each batch of samples) to document their precision in conducting the method.

14.4.2 Precision for replicate HPLC injections should be ± 10% or better, day to day, for calibration standards.

14.4.3 Method accuracy is difficult to assess because of the difficulty in generating accurate gaseous standards. Literature results indicate (1-3) recoveries of 75% or greater are achieved for a broad range of aldehydes. Each laboratory should periodically collect field samples wherein the impinger solution is spiked with a known quantity of the compound of interest, prepared as a dilute methanol solution. Formaldehyde cannot be spiked in this manner and therefore a solution of the DNPH derivative should be used for spiking purposes.

14.4.4 Before initial use of the method each laboratory should generate triplicate spiked samples at a minimum of three concentration levels, bracketing the range of interest for each compound. Triplicate nonspiked samples must also be processed. Recoveries of >70 ± 20% and blank levels of <5 ng/L for formaldehyde and 1 ng/L for the other compounds (assuming a 60 liter air sample) should be achieved.

References

(1) Grosjean, D., Fung, K., and Atkinson, R., "Measurements of Aldehydes in the Air Environment", Proc. Air Poll. Cont. Assoc., Paper 80-50.4, 1980.

(2) Grosjean, D. and Fung K., "Collection Efficiencies of Cartridges and Micro-Impingers for Sampling of Aldehydes in Air as 2,4-Dinitrophenylhydrazones", Anal. Chem. 54, 1221-1224, 1982.

(3) Grosjean, D., "Formaldehyde and Other Carbonyls in Los Angeles Ambient Air", Environ. Sci. Technol. 16, 254-262, 1982.

(4) Riggin, R. M., "Technical Assistance Document for Sampling and Analysis of Toxic Organic Compounds in Ambient Air", EPA-600/4-83-027. U.S. Environmental Protection Agency, Research Triangle Park, North Carolina, 1983.

(5) Annual Book of ASTM Standards, Part 11.03, "Atmospheric Analysis", American Society for Testing and Material, Philadelphia, Pennsylvania, 1983.

(6) Berry, D. A., Holdren, M. W., Lyon, T. F., Riggin, R. M., and Spicer, C. W., "Turbine Engine Exhaust Hydrocarbon Analysis-Interim Report on Task 1 and 2", Report on Contract No. F-08635-82-C-0131, Air Force Engineering and Services Center, Tyndall AFB, Florida, 1983.

(7) Shiner, R., Fuson, R., and Curtin, D., "The Systematic Identification of Organic Compounds", John Wiley and Sons, Inc., 5th ed., New York, 1964.

(8) "Method 6 Determination of SO_2 Emissions from Stationary Sources", Federal Register, Vol. 42., No. 160, August 1977.

TABLE 1. ALDEHYDES AND KETONES FOR WHICH THE METHOD HAS BEEN EVALUATED

Compound	Molecular Weight Derivative	Molecular Weight Compound	Typical Relative Retention Time[a]
Formaldehyde	210	30	1.0
Acetaldehyde	224	44	1.3
Acrolein	236	56	1.6
Propanal	238	58	1.7
Acetone	238	58	1.9[b]
Crotonaldehyde	250	70	2.3
Isobutyraldehyde	252	72	2.4
Methyl Ethyl Ketone	252	72	2.8
Benzaldehyde	286	106	3.2
Pentanal	266	86	3.7
o-Tolualdehyde	300	120	4.8
m-Tolualdehyde	300	120	5.1
p-Tolualdehyde	300	120	5.3
Hexanal	280	100	5.7

(a) Using HPLC conditions shown in Figure 4. Formaldehyde = 1.0

(b) Acetone background levels in the reagent prevent its determination in most cases.

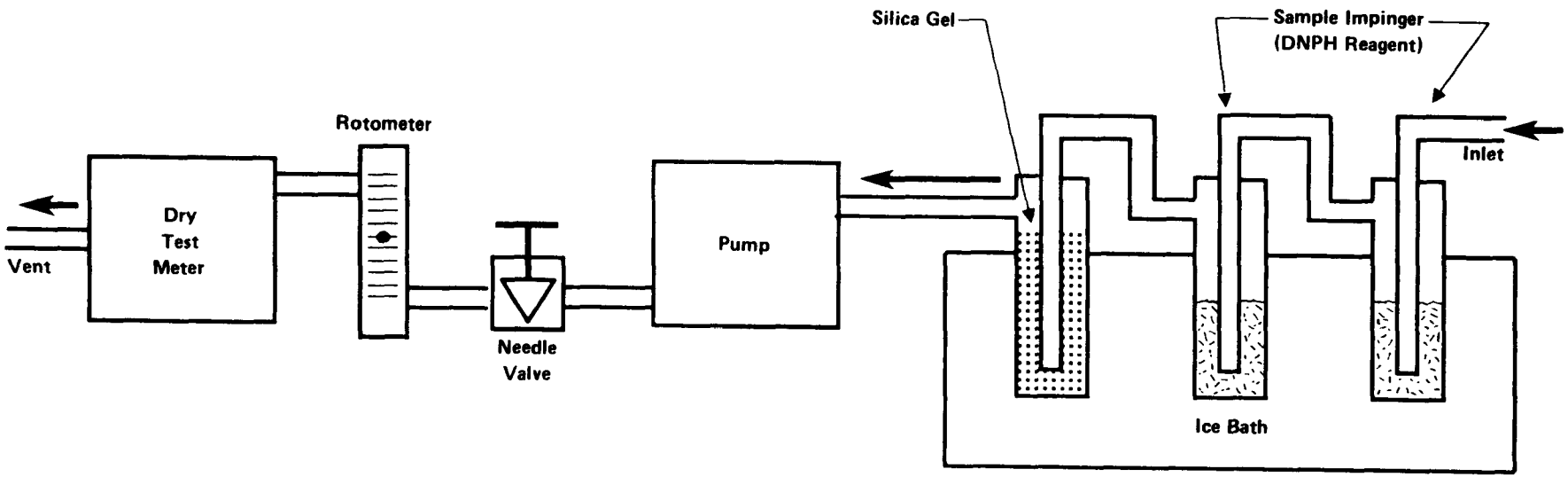

FIGURE 1. TYPICAL SAMPLING SYSTEM

SAMPLING DATA SHEET
(One Sample Per Data Sheet)

PROJECT: _____ DATE(S) SAMPLED: _____

SITE: _____ TIME PERIOD SAMPLED: _____

LOCATION: _____ OPERATOR: _____

INSTRUMENT MODEL NO: _____ CALIBRATED BY: _____

PUMP SERIAL NO: _____

SAMPLING DATA

Sample Number: _____

Start Time: _____ Stop Time: _____

Time	Dry Gas Meter Reading	Rotameter Reading	Flow Rate,*Q ml/Min	Ambient Temperature °C	Barometric Pressure, mmHg	Relative Humidity, %	Comments
1.							
2.							
3.							
4.							
N.							

Total Volume Data**

V_m = (Final - Initial) Dry Gas Meter Reading, or = _____ Liters

$$= \frac{Q_1 + Q_2 + Q_3 \ldots Q_N}{N} \times \frac{1}{1000 \times (\text{Sampling Time in Minutes})} = _____ \text{ Liters}$$

* Flowrate from rotameter or soap bubble calibrator (specify which).
** Use data from dry gas meter if available.

FIGURE 2. EXAMPLE SAMPLING DATA SHEET

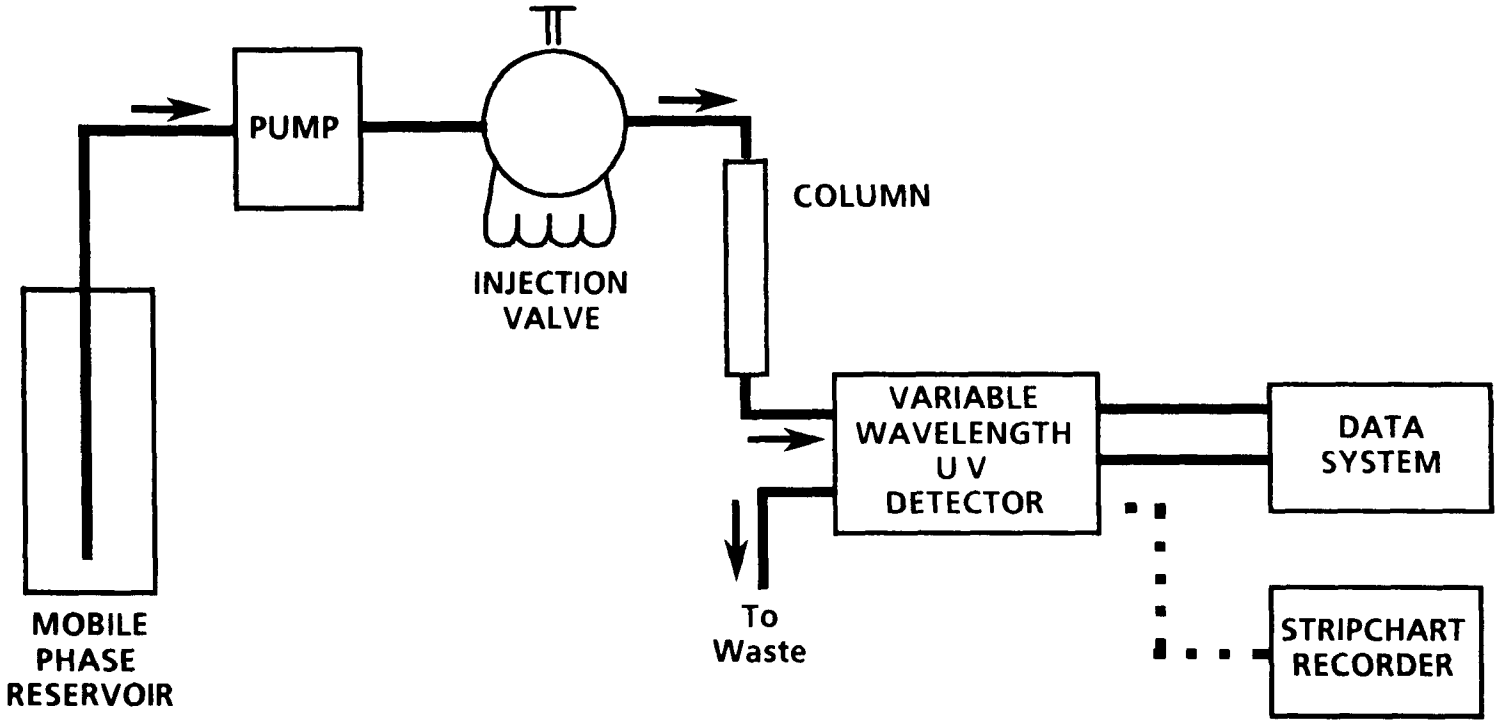

FIGURE 3. TYPICAL HPLC SYSTEM

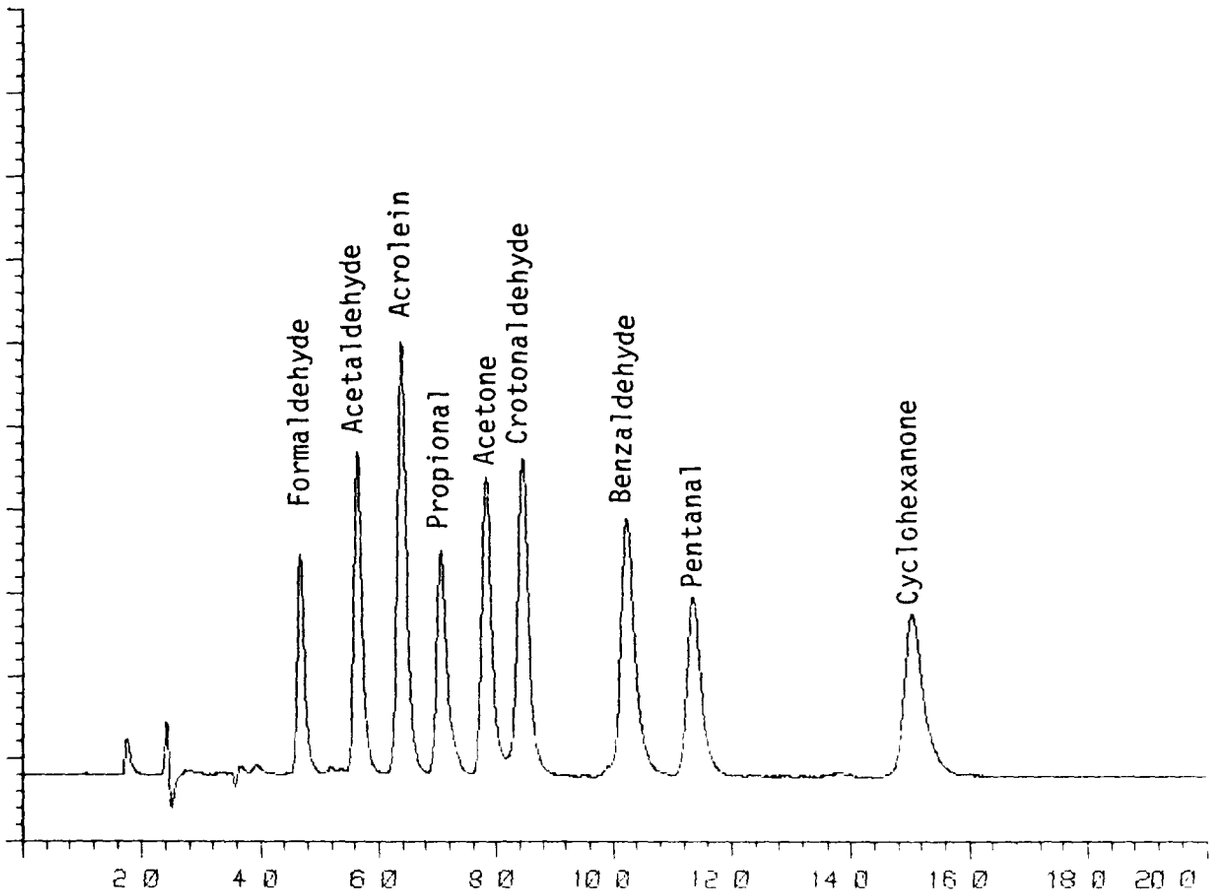

FIGURE 4. TYPICAL HPLC CHROMATOGRAM

Column - Zorbax ODS, 250 x 4.6 mm
Mobile Phase - 80/20 Methanol/H_2O
Flow Rate - 1 mL/Minute
Detector - UV at 370 nm

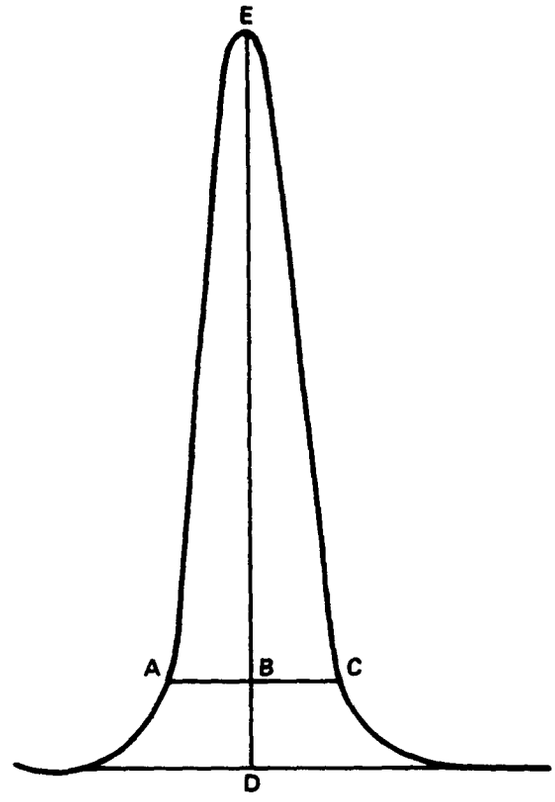

$$\text{Asymmetry Factor} = \frac{BC}{AB}$$

Example Calculation:

Peak Height = DE = 100 mm
10% Peak Height = BD = 10 mm
Peak Width at 10% Peak Height = AC = 23 mm
AB = 11 mm
BC = 12 mm

Therefore: $\text{Asymmetry Factor} = \frac{12}{11} = 1.1$

FIGURE 5. PEAK ASYMMETRY CALCULATION

United States
Environmental Protection
Agency

Environmental Monitoring and
Support Laboratory
Cincinnati OH 45268

Research and Development

Test Method

Organochlorine Pesticides and PCBs — Method 608

1. Scope and Application

1.1 This method covers the determination of certain organochlorine pesticides and PCBs. The following parameters can be determined by this method:

Parameter	STORET No.	CAS No.
Aldrin	39330	309-00-2
α-BHC	39337	319-84-6
β-BHC	39338	319-85-7
δ-BHC	34259	319-86-8
γ-BHC	39340	58-89-9
Chlordane	39350	57-74-9
4,4′-DDD	39310	72-54-8
4,4′-DDE	39320	72-55-9
4,4′-DDT	39300	50-29-3
Dieldrin	39380	60-57-1
Endosulfan I	34361	959-98-8
Endosulfan II	34356	33212-65-9
Endosulfan sulfate	34351	1031-07-8
Endrin	39390	72-20-8
Endrin aldehyde	34366	7421-93-4
Heptachlor	39410	76-44-8
Heptachlor epoxide	39420	1024-57-3
Toxaphene	39400	8001-35-2
PCB-1016	34671	12674-11-2
PCB-1221	39488	11104-28-2
PCB-1232	39492	11141-16-5
PCB-1242	39496	53469-21-9
PCB-1248	39500	12672-29-6
PCB-1254	39504	11097-69-1
PCB-1260	39508	11096-82-5

1.2 This is a gas chromatographic (GC) method applicable to the determination of the compounds listed above in municipal and industrial discharges as provided under 40 CFR 136.1. When this method is used to analyze unfamiliar samples for any or all of the compounds above, compound identifications should be supported by at least one additional qualitative technique. This method describes analytical conditions for a second gas chromatographic column that can be used to confirm measurements made with the primary column. Method 625 provides gas chromatograph/mass spectrometer (GC/MS) conditions appropriate for the qualitative and

quantitative confirmation of results for all of the parameters listed above, using the extract produced by this method

1.3 The method detection limit (MDL, defined in Section 14.1)[1] for each parameter is listed in Table 1. The MDL for a specific wastewater may differ from those listed, depending upon the nature of interferences in the sample matrix.

1.4 The sample extraction and concentration steps in this method are essentially the same as in methods 606, 609, 611 and 612. Thus, a single sample may be extracted to measure the parameters included in the scope of each of these methods. When cleanup is required, the concentration levels must be high enough to permit selection of aliquots as necessary to apply appropriate cleanup procedures. The analyst is allowed the latitude to select gas chromatographic conditions appropriate for the simultaneous measurement of combinations of these parameters.

1.5 Any modification of this method, beyond those expressly permitted, shall be considered as major modifications subject to application and approval of alternate test procedures under 40 CFR 136.4 and 136.5.

1.6 This method is restricted to use by or under the supervision of analysts experienced in the use of gas chromatography and in the interpretation of gas chromatograms. Each analyst must demonstrate the ability to generate acceptable results with this method using the procedure described in Section 8.2.

2. Summary of Method

2.1 A measured volume of sample, approximately one-liter, is solvent extracted with methylene chloride using a separatory funnel. The methylene chloride extract is dried and exchanged to hexane, during concentration to a final volume of 10 mL or less. Gas chromatographic conditions are described which permit the separation and measurement of the parameters in the extract by electron capture GC[2].

2.2 The method provides a Florisil column procedure and elemental sulfur removal procedure to aid in the elimination of interferences that may be encountered.

3. Interferences

3.1 Method interferences may be caused by contaminants in solvents, reagents, glassware, and other sample processing hardware that lead to discrete artifacts and/or elevated baselines in gas chromatograms. All of these materials must be routinely demonstrated to be free from interferences under the conditions of the analysis by running laboratory reagent blanks as described in Section 8 5.

3.1.1 Glassware must be scrupulously cleaned[3]. Clean all glassware as soon as possible after use by rinsing with the last solvent used in it This should be followed by detergent washing with hot water, and rinses with tap water and distilled water. It should then be drained dry and heated in a muffle furnace at 400 °C for 15 to 30 minutes Some thermally stable materials, such as PCBs, may not be eliminated by this treatment. Solvent rinses with acetone and pesticide quality hexane may be substituted for the muffle furnace heating. Thorough rinsing with such solvents usually elminates PCB interference. Volumetric ware should not be heated in a muffle furnace. After drying and cooling, glassware should be sealed and stored in a clean environment to prevent any accumulation of dust or other contaminants Store inverted or capped with aluminum foil

3.1.2 The use of high purity reagents and solvents helps to minimize interference problems. Purification of solvents by distillation in all-glass systems may be required.

3.2 Interferences by phthalate esters can pose a major problem in pesticide analysis when using the elution capture detector. These compounds generally appear in the chromatogram as large eluting peaks, especially in the 15 and 50% fractions from Florisil. Common flexible plastics contain varying amounts of phthalates. These phthalates are easily extracted or leached from such materials during laboratory operations. Cross contamination of clean glassware routinely occurs when plastics are handled during extraction steps, especially when solvent wetted surfaces are handled. Interferences from phthalates can best be minimized by avoiding the use of plastics in the laboratory. Exhaustive cleanup of reagents and glassware may be required to eliminate background phthalate contamination[4,5]. The interferences from phthalate esters can be avoided by using a microcoulometric or electrolytic conductivity detector.

3.3 Matrix interferences may be caused by contaminants that are coextracted from the sample The extent of matrix interferences will vary considerably from source to source, depending upon the nature and diversity of the industrial complex or municipality being sampled. The cleanup procedures in Section 11 can be used to overcome many of these interferences, but unique samples may require additional cleanup approaches to achieve the MDL listed in Table 1.

4. Safety

4.1 The toxicity or carcinogenicity of each reagent used in this method has not been precisely defined; however, each chemical compound should be treated as a potential health hazard. From this viewpoint, exposure to these chemicals must be reduced to the lowest possible level by whatever means available. The laboratory is responsible for maintaining a current awareness file of OSHA regulations regarding the safe handling of the chemicals specified in this method. A reference file of material data handling sheets should also be made available to all personnel involved in the chemical analysis. Additional references to laboratory safety are available and have been identified[6-8] for the information of the analyst.

4.2 The following parameters covered by this method have been tentatively classified as known or suspected, human or mammalian carcinogens: 4,4'-DDT,4,4'-DDD, the BHCs, and the PCBs. Primary standards of these toxic compounds should be prepared in a hood.

5. Apparatus and Materials

5.1 Sampling equipment, for discrete or composite sampling.

5.1.1 Grab sample bottle—Amber glass, one-liter or one-quart volume, fitted with screw caps lined with Teflon. Foil may be substituted for Teflon if the sample is not corrosive. If amber bottles are not available, protect samples from light. The container must be washed, rinsed with acetone or methylene chloride, and dried before use to minimize contamination.

5.1.2 Automatic sampler (optional)—Must incorporate glass sample containers for the collection of a minimum of 250 mL. Sample containers must be kept refrigerated at 4 °C and protected from light during compositing. If the sampler uses a peristaltic pump, a minimum length of compressible

silicone rubber tubing may be used. Before use, however, the compressible tubing should be thoroughly rinsed with methanol, followed by repeated rinsings with distilled water to minimize the potential for contamination of the sample. An integrating flow meter is required to collect flow proportional composites.

5.2 Glassware (All specifications are suggested. Catalog numbers are included for illustration only).

5.2.1 Separatory funnel—2000-mL, with Teflon stopcock.

5.2.2 Drying column—Chromatographic column approximately 400 mm long × 19 mm ID, with coarse frit.

5.2.3 Chromatographic column—Pyrex, 400 mm long × 22 mm ID, with coarse fritted plate and Teflon stopcock (Kontes K-42054 or equivalent).

5.2.4 Concentrator tube, Kuderna-Danish—10-mL, graduated (Kontes K-570050-1025 or equivalent). Calibration must be checked at the volumes employed in the test. Ground glass stopper is used to prevent evaporation of extracts.

5.2.5 Evaporative flask, Kuderna-Danish—500-mL (Kontes K-570001-0500 or equivalent). Attach to concentrator tube with springs.

5.2.6 Snyder column, Kuderna-Danish—three-ball macro (Kontes K-503000-0121 or equivalent).

5.2.7 Vials—Amber glass, 10- to 15-mL capacity, with Teflon-lined screw cap.

5.3 Boiling chips—approximately 10/40 mesh. Heat to 400 °C for 30 minutes or Soxhlet extract with methylene chloride.

5.4 Water bath—Heated, with concentric ring cover, capable of temperature control (± 2 °C). The bath should be used in a hood.

5.5 Balance—Analytical, capable of accurately weighing 0.0001 g.

5.6 Gas chromatograph—An analytical system complete with gas chromatograph suitable for on-column injection and all required accessories including syringes, analytical columns, gases, detector, and strip-chart recorder. A data system is recommended for measuring peak areas.

5.6.1 Column 1—1.8 m long × 4 mm ID glass, packed with 1.5% SP-2250/1.95% SP-2401 on Supelcoport (100/120 mesh) or equivalent. Column 1 was used to develop the method performance statements in Section 14. Guidelines for the use of alternate column packings are provided in Section 12.1.

5.6.2 Column 2—1.8 m long × 4 mm ID glass, packed with 3% OV-1 on Supelcoport (100/120 mesh) or equivalent.

5.6.3 Detector—Electron capture. This detector has proven effective in the analysis of wastewaters for the parameters listed in the scope, and was used to develop the method performance statements in Section 14. Guidelines for the use of alternate detectors are provided in Section 12.1.

6. Reagents

6.1 Reagent water—Reagent water is defined as a water in which an interferent is not observed at the MDL of each parameter of interest.

6.2 Sodium hydroxide solution (10 N)—(ACS). Dissolve 40g NaOH in reagent water and dilute to 100 mL.

6.3 Sodium thiosulfate—(ACS). Granular

6.4 Sulfuric acid solution (1 + 1)—(ACS). Slowly, add 50 mL H_2SO_4 (sp. gr. 1.84) to 50 mL of reagent water.

6.5 Acetone, hexane, isooctane (2,2,4-trimethylpentane), methylene chloride—Pesticide quality or equivalent.

6.6 Ethyl ether—Pesticide quality or equivalent, redistilled in glass if necessary.

6.6.1 Must be free of peroxides as indicated by EM Laboratories Quant test strips (Available from Scientific Products Co., Cat. No. P1126-8, and others suppliers.)

6.6.2 Procedures recommended for removal of peroxides are provided with the test strips. After cleanup, 20 mL ethyl alcohol preservative must be added to each liter of ether.

6.7 Sodium sulfate—(ACS) Granular, anhydrous. Purify by heating at 400 °C for 4 hours in a shallow tray.

6.8 Florisil—PR grade (60/100 mesh); purchase activated at 1250 °F and store in dark in glass containers with glass stoppers or foil-lined screw caps. Before use, activate each batch at least 16 hours at 130 °C in a foil covered glass container.

6.9 Mercury—Triple distilled.

6.10 Copper powder—Activated.

6.11 Stock standard solutions (1.00 μg/μL)—Stock standard solutions can be prepared from pure standard materials or purchased as certified solutions.

6.11.1 Prepare stock standard solutions by accurately weighing about 0.0100 grams of pure material Dissolve the material in isooctane, dilute to volume in a 10-mL volumetric flask. Larger volumes can be used at the convenience of the analyst. If compound purity is certified at 96% or greater, the weight can be used without correction to calculate the concentration of the stock standard. Commercially prepared stock standards can be used at any concentration if they are certified by the manufacturer or by an independent source.

6.11.2 Transfer the stock standard solutions into Teflon-sealed screw-cap bottles Store at 4 °C and protect from light. Stock standard solutions should be checked frequently for signs of degradation or evaporation, especially just prior to preparing calibration standards from them. Quality control check standards that can be used to determine the accuracy of calibration standards will be available from the U.S. Environmental Protection Agency, Environmental Monitoring and Support Laboratory, Cincinnati, Ohio 45268.

6.11.3 Stock standard solutions must be replaced after six months, or sooner if comparison with check standards indicate a problem.

7. Calibration

7.1 Establish gas chromatographic operating parameters which produce retention times equivalent to those indicated in Table 1. The gas chromatographic system may be calibrated using the external standard technique (Section 7.2) or the internal standard technique (Section 7.3).

7.2 External standard calibration procedure:

7.2.1 Prepare calibration standards at a minimum of three concentration levels for each parameter of interest by adding volumes of one or more stock standards to a volumetric flask and diluting to volume with isooctane. One of the external standards should be at a concentration near, but above, the MDL and the other concentrations should correspond to the expected range of concentrations found in real samples or should define the working range of the detector.

7.2.2 Using injections of 2 to 5 μL of each calibration standard, tabulate peak height or area responses against the mass injected. The results can be used to prepare a calibration curve for each compound. Alternatively, if the ratio of response to amount injected (calibration factor) is a constant over the working range (<10% relative standard deviation, RSD), linearity through the origin can be assumed and the average ratio or calibration factor can be used in place of a calibration curve.

7.2.3 The working calibration curve or calibration factor must be verified on each working day by the measurement of one or more calibration standards. If the response for any parameter varies from the predicted response by more than ±10%, the test must be repeated using a fresh calibration standard. Alternatively, a new calibration curve or calibration factor must be prepared for that compound.

7.3 Internal standard calibration procedure. To use this approach, the analyst must select one or more internal standards that are similar in analytical behavior to the compounds of interest. The analyst must further demonstrate that the measurement of the internal standard is not affected by method or matrix interferences. Because of these limitations, no internal standard can be suggested that is applicable to all samples.

7.3.1 Prepare calibration standards at a minimum of three concentration levels for each parameter of interest by adding volumes of one or more stock standards to a volumetric flask. To each calibration standard, add a known constant amount of one or more internal standards, and dilute to volume with isooctane. One of the standards should be at a concentration near, but above, the MDL and the other concentrations should correspond to the expected range of concentrations found in real samples or should define the working range of the detector.

7.3.2 Using injections of 2 to 5 μL of each calibration standard, tabulate peak height or area responses against concentration for each compound and internal standard, and calculate response factors (RF) for each compound using equation 1.

Eq. 1. $RF = (A_s C_{is})/(A_{is} C_s)$

where:

A_s = Response for the parameter to be measured.

A_{is} = Response for the internal standard.

C_{is} = Concentration of the internal standard, (μg/L).

C_s = Concentration of the parameter to be measured, (μg/L).

If the RF value over the working range is a constant (<10% RSD), the RF can be assumed to be invariant and the average RF can be used for calculations. Alternatively, the results can be used to plot a calibration curve of response ratios, A_s/A_{is}, vs. RF.

7.3.3 The working calibration curve or RF must be verified on each working day by the measurement of one or more calibration standards. If the response for any parameter varies from the predicted response by more than ±10%, the test must be repeated using a fresh calibration standard. Alternatively, a new calibration curve must be prepared for that compound.

7.4 The cleanup procedure in Section 11 utilizes Florisil chromatography. Florisil from different batches or sources may vary in absorptive capacity. To standardize the amount of Florisil which is used, the use of lauric acid value[9] is suggested. The referenced procedure determines the adsorption from hexane solution of lauric acid (mg) per gram Florisil. The amount of Florisil to be used for each column is calculated by dividing this factor into 110 and multiplying by 20 g.

7.5 Before using any cleanup procedure, the analyst must process a series of calibration standards through the procedure to validate elution patterns and the absence of interferences from the reagents.

8. Quality Control

8.1 Each laboratory that uses this method is required to operate a formal quality control program. The minimum requirements of this program consist of an initial demonstration of laboratory capability and the analysis of spiked samples as a continuing check on performance. The laboratory is required to maintain performance records to define the quality of data that is generated. Ongoing performance checks must be compared with established performance criteria to determine if the results of analyses are within accuracy and precision limits expected of the method.

8.1.1 Before performing any analyses, the analyst must demonstrate the ability to generate acceptable accuracy and precision with this method. This ability is established as described in Section 8.2.

8.1.2 In recognition of the rapid advances that are occurring in chromatography, the analyst is permitted certain options to improve the separations or lower the cost of measurements. Each time such modifications are made to the method, the analyst is required to repeat the procedure in Section 8.2.

8.1.3 The laboratory must spike and analyze a minimum of 10% of all samples to monitor continuing laboratory performance. This procedure is described in Section 8.4.

8.2 To establish the ability to generate acceptable accuracy and precision, the analyst must perform the following operations.

8.2.1 Select a representative spike concentration for each compound to be measured. Using stock standards, prepare a quality control check sample concentrate in acetone 1000 times more concentrated than the selected concentrations. Quality control check sample concentrates, appropriate for use with this method, will be available from the U.S. Environmental Protection Agency, Environmental Monitoring and Support Laboratory, Cincinnati, Ohio 45268.

8.2.2 Using a pipet, add 1.00 mL of the check sample concentrate to each of a minimum of four 1000-mL aliquots of reagent water. A representative wastewater may be used in place of the reagent water, but one or more additional aliquots must be analyzed to determine background levels, and the spike level must exceed twice the background level for the test to be valid. Analyze the aliquots according to the method beginning in Section 10.

8.2.3 Calculate the average percent recovery, (R), and the standard deviation of the percent recovery (s), for the results. Wastewater background corrections must be made before R and s calculations are performed.

8.2.4 Using Table 2, note the average recovery (X) and standard deviation (p) expected for each method parameter. Compare these to the calculated values for R and s. If $s > 2p$ or $|X - R| > 2p$, review potential problem areas and repeat the test.

8.2.5 The U.S. Environmental Protection Agency plans to establish performance criteria for R and s based upon the results of interlaboratory testing. When they become available, these criteria must be met before any samples may be analyzed.

8.3 The analyst must calculate method performance criteria and define

the performance of the laboratory for each spike concentration and parameter being measured.

8.3.1 Calculate upper and lower control limits for method performance:

Upper Control Limit (UCL) = R + 3s
Lower Control Limit (LCL) = R − 3s

where R and s are calculated as in Section 8.2.3. The UCL and LCL can be used to construct control charts[10] that are useful in observing trends in performance. The control limits above be replaced by method performance criteria as they become available from the U.S. Environmental Protection Agency.

8.3.2 The laboratory must develop and maintain separate accuracy statements of laboratory performance for wastewater samples. An accuracy statement for the method is defined as R ± s. The accuracy statement should be developed by the analysis of four aliquots of wastewater as described in Section 8.2.2, followed by the calculation of R and s. Alternately, the analyst may use four wastewater data points gathered through the requirement for continuing quality control in Section 8.4. The accuracy statements should be updated regularly[10].

8.4. The laboratory is required to collect a portion of their samples in duplicate to monitor spike recoveries. The frequency of spiked sample analysis must be at least 10% of all samples or one sample per month, whichever is greater. One aliquot of the sample must be spiked and analyzed as described in Section 8.2. If the recovery for a particular parameter does not fall within the control limits for method performance, the results reported for that parameter in all samples processed as part of the same set must be qualified as described in Section 13.5. The laboratory should monitor the frequency of data so qualified to ensure that it remains at or below 5%.

8.5 Before processing any samples, the analyst should demonstrate through the analysis of a one-liter aliquot of reagent water, that all glassware and reagent interferences are under control. Each time a set of samples is extracted or there is a change in reagents, a laboratory reagent blank should be processed as a safeguard against laboratory contamination.

8.6 It is recommended that the laboratory adopt additional quality assurance practices for use with this method. The specific practices that are most productive depend upon the needs of the laboratory and the nature of the samples. Field duplicates may be analyzed to monitor the precision of the sampling technique. When doubt exists over the identification of a peak on the chromatogram, confirmatory techniques such as gas chromatography with a dissimilar column, specific element detector, or mass spectrometer must be used. Whenever possible, the laboratory should perform analysis of standard reference materials and participate in relevant performance evaluation studies.

9. Sample Collection, Preservation, and Handling

9.1 Grab samples must be collected in glass containers. Conventional sampling practices[11] should be followed, except that the bottle must not be prewashed with sample before collection. Composite samples should be collected in refrigerated glass containers in accordance with the requirements of the program. Automatic sampling equipment must be as free as possible of Tygon tubing and other potential sources of contamination.

9.2 The samples must be iced or refrigerated at 4 °C from the time of collection until extraction. If the samples will not be extracted within 72 hours of collection, the sample should be adjusted to a pH range of 5.0 to 9.0 with sodium hydroxide or sulfuric acid. Record the volume of acid or base used. If aldrin is to be determined, add sodium thiosulfate when residual chlorine is present. U.S. Environmental Protection Agency methods 330.4 and 330.5 may be used to measure chlorine residual[12]. Field test kits are available for this purpose.

9.3 All samples must be extracted within 7 days and completely analyzed within 40 days of extraction[2].

10. Sample Extraction

10.1 Mark the water meniscus on the side of the sample bottle for later determination of sample volume. Pour the entire sample into a two-liter separatory funnel.

10.2 Add 60 mL methylene chloride to the sample bottle, seal, and shake 30 seconds to rinse the inner surface. Transfer the solvent to the separatory funnel and extract the sample by shaking the funnel for two minutes with periodic venting to release excess pressure. Allow the organic layer to separate from the water phase for a minimum of 10 minutes. If the emulsion interface between layers is more than one-third the volume of the solvent layer, the analyst must employ mechanical techniques to complete the phase separation. The optimum technique depends upon the sample, but may include stirring, filtration of the emulsion through glass wool, centrifugation, or other physical methods. Collect the methylene chloride extract in a 250-mL Erlenmeyer flask.

10.3 Add a second 60-mL volume of methylene chloride to the sample bottle and repeat the extraction procedure a second time, combining the extracts in the Erlenmeyer flask. Perform a third extraction in the same manner.

10.4 Assemble a Kuderna-Danish (K-D) concentrator by attaching a 10-mL concentrator tube to a 500-mL evaporative flask. Other concentration devices or techniques may be used in place of the Kuderna Danish if the requirements of Section 8.2 are met.

10.5 Pour the combined extract through a drying column containing about 10 cm of anhydrous sodium sulfate, and collect the extract in the K-D concentrator. Rinse the Erlenmeyer flask and column with 20 to 30 mL of methylene chloride to complete the quantitative transfer.

10.6 Add one or two clean boiling chips to the evaporative flask and attach a three-ball Snyder column. Prewet the Snyder column by adding about 1 mL methylene chloride to the top. Place the K-D apparatus on a hot water bath (60 to 65 °C) so that the concentrator tube is partially immersed in the hot water and the entire lower rounded surface of the flask is bathed with hot vapor. Adjust the vertical position of the apparatus and the water temperature as required to complete the concentration in 15 to 20 minutes. At the proper rate of distillation the balls of the column will actively chatter but the chambers will not flood with condensed solvent. When the apparent volume of liquid reaches 1 mL, remove the K-D apparatus and allow it to drain and cool for at least 10 minutes.

10.7 Increase the temperature of the hot water bath to about 80 °C. Momentarily remove the Snyder column, add 50 mL of hexane and a new boiling chip and reattach the Snyder column. Prewet the column by adding about 1 mL of hexane to the top. Concentrate the solvent extract as before. The elapsed time of concentration should be 5 to 10 minutes. When the apparent volume of liquid reaches 1 mL, remove the K-D apparatus and allow it to drain and cool at least 10 minutes.

10.8 Remove the Snyder column and rinse the flask and its lower joint into the concentrator tube with 1 to 2 mL of hexane. A 5-mL syringe is recommended for this operation. Stopper the concentrator tube and store refrigerated if further processing will not be performed immediately. If the extracts will be stored longer than two days, they should be transferred to Teflon-sealed screw-cap bottles. If the sample extract requires no further cleanup, proceed with gas chromatographic analysis. If the sample requires cleanup proceed to Section 11.

10.9 Determine the original sample volume by refilling the sample bottle to the mark and transferring the liquid to a 1000-mL graduated cylinder. Record the sample volume to the nearest 5 mL.

11. Cleanup and Separation

11.1 Cleanup procedures may not be necessary for a relatively clean sample matrix. The cleanup procedures recommended in this method have been used for the analysis of various clean waters and industrial effluents. If particular circumstances demand the use of an alternative cleanup procedure, the analyst must determine the elution profile and demonstrate that the recovery of each compound of interest is no less than 85%. The Florisil column allows for a select fractionation of the compounds and will eliminate polar materials. Elemental sulfur interferes with the electron capture gas chromatography of certain pesticides, but can be removed by the techniques described below.

11.2 Florisil column cleanup:

11.2.1 Add a weight of Florisil (nominally 21 g) predetermined by calibration (Section 7.4 and 7.5), to a chromatographic column. Settle the Florisil by tapping the column. Add sodium sulfate to the top of the Florisil to form a layer 1 to 2 cm deep. Add 60 mL of hexane to wet and rinse the sodium sulfate and Florisil. Just prior to exposure of the sodium sulfate to air, stop the elution of the hexane by closing the stopcock on the chromatography column. Discard the eluate.

11.2.2 Adjust the sample extract volume to 10 mL with hexane and transfer it from the K-D concentrator tube to the Florisil column. Rinse the tube twice with 1 to 2 mL hexane, adding each rinse to the column.

11.2.3 Place a 500-mL K-D flask and clean concentrator tube under the chromatography column. Drain the column into the flask until the sodium sulfate latyer is nearly exposed. Elute the column with 200 mL of 6% ethyl ether in hexane (V/V) (Fraction 1) using a drip rate of about 5 mL/min. Remove the K-D flask and set aside for later concentration. Elute the column again, using 200 mL of 15% ethyl ether in hexane (V/V)(Fraction 2), into a second K-D flask. Perform the third elution using 200 mL of 50% ethyl ether in hexane (V/V)(Fraction 3). The elution patterns for the pesticides an PCB's are shown in Table 2.

11.2.4 Concentrate the eluates by standard K-D techniques (Section 10.6), substituting hexane for the glassware rinses and using the water bath at about 85 °C. Adjust final volume to 10 mL with hexane. Analyze by gas chromatography.

11.3 Elemental sulfur will usually elute entirely in Fraction 1 of the Florisil column cleanup. To remove sulfur interference from this fraction or the original extract, pipet 1.00 mL of the concentrated extract into a clean concentrator tube or Teflon-sealed vial. Add one to three drops of mercury and seal[13]. Agitate the contents of the vial for 15 to 30 seconds. Prolonged shaking (two hours) may be required. If so, this may be accomplished with a reciprocal shaker. Alternatively, activated copper powder may be used for sulfur removal[14]. Analyze by gas chromatography.

12. Gas Chromatography

12.1 Table 1 summarizes the recommended operating conditions for the gas chromatograph. This table includes retention times and MDL that were obtained under these conditions. Examples of the parameter separations achieved by column 1 are shown in Figures 1 to 10. Other packed columns, chromatographic conditions, or detectors may be used if the requirements of Section 8.2 are met. Capillary (open-tubular) columns may also be used if the relative standard deviations of responses for replicate injections are demonstrated to be less than 6% and the requirements of Section 8.2 are met.

12.2 Calibrate the system daily as described in Section 7.

12.3 If the internal standard approach is being used, the internal standard must be added to the sample extract and mixed thoroughly immediately, before injection into the instrument.

12.4 Inject 2 to 5 µL of the sample extract using the solvent-flush technique[15]. Smaller (1.0 µL) volumes can be injected if automatic devices are employed. Record the volume injected to the nearest 0.05 µL, the total extract volume, and the resulting peak size in area or peak height units.

12.5 The width of the retention time window used to make identifications should be based upon measurements of actual retention time variations of standards over the course of a day. Three times the standard deviation of a retention time for a compound can be used to calculate a suggested window size; however, the experience of the analyst should weigh heavily in the interpretation of chromatograms.

12.6 If the response for the peak exceeds the working range of the system, dilute the extract and reanalyze.

12.7 If the measurement of the peak response is prevented by the presence of interferences, further cleanup is required.

13. Calculations

13.1 Determine the concentration of individual compounds in the sample.

13.1.1 If the external standard calibration procedure is used, calculate the amount of material injected from the peak response using the calibration curve or calibration factor in Section 7.2.2. The concentration in the sample can be calculated from equation 2:

Eq. 2. Concentration, µg/L = $\frac{(A)(V_t)}{(V_i)(V_s)}$

where:

A = Amount of material injected, in nanograms.
V_i = Volume of extract injected (µL).
V_t = Volume of total extract (µL).
V_s = Volume of water extracted (mL).

13.1.2 If the internal standard calibration procedure was used, calculate the concentration in the sample using the response factor (RF) determined in Section 7.3.2 and equation 3.

Eq. 3

Concentration, µg/L = $\frac{(A_s)(I_s)}{(A_{is})(RF)(V_o)}$

where:

A_s = Response for the parameter to be measured.
A_{is} = Response for the internal standard.
I_s = Amount of internal standard added to each extract (µg).
V_o = Volume of water extracted, in liters.

13.2 When it is apparent that two or more PCB (Aroclor) mixtures are present, the Webb and McCall procedure[16] may be used to identify and quantify the Aroclors.

13.3 For multicomponent mixtures (chlordane, toxaphene and PCBs) match retention times of peaks in the standards with peaks in the sample. Quantitate every identifiable peak unless interference with individual peaks persist after cleanup. Add peak height or peak area of each identified peak in the chromatogram. Calculate as total response in the sample versus total response in the standard.

13.4 Report results in micrograms per liter without correction for recovery data. When duplicate and spiked samples are analyzed, report all data obtained with the sample results.

13.5 For samples processed as part of a set where the laboratory spiked sample recovery falls outside of the control limits in Section 8.3, data for the affected parameters must be labeled as suspect.

14. Method Performance

14.1 The method detection limit (MDL) is defined as the minimum concentration of a substance that can be measured and reported with 99% confidence that the value is above zero[1]. The MDL concentrations listed in Table 1 were obtained using reagent water[17]. Similar results were achieved using representative wastewaters.

14.2 This method has been tested for linearity of spike recovery from reagent water and has been demonstrated to be applicable over the concentration range from 4 × MDL up to 1000 × MDL with the following exceptions: Chlordane recovery at 4 × MDL was low (60%); Toxaphene recovery was demonstrated linear over the range of 10 × MDL to 1000 × MDL[17].

14.3 In a single laboratory (Southwest Research Institute), using spiked wastewater samples, the average recoveries presented in Table 3 were obtained[4]. Each spiked sample was analyzed in triplicate on two separate days. The standard deviation of the percent recovery is also included in Table 3.

14.4 The U.S. Environmental Protection Agency is in the process of conducting an interlaboratory method study to fully define the performance of this method.

References

1 See Appendix A

2. "Determination of Pesticides and PCBs in Industrial and Municipal Wastewaters." Report for EPA Contract 68-03-2606 In preparation.

3. ASTM Annual Book of Standards, Part 31, D3694. "Standard Practice for Preparation of Sample Containers and for Preservation," American Society for Testing and Materials, Philadelphia, PA, p. 679, 1980

4. Giam, D.S., Chan H S. and Nef, G.S., "Sensitive Method for Determination of Phthalate Ester Plasticizers in Open-Ocean Biota Samples," *Analytical Chemistry, 47,* 2225, (1975).

5. Giam, C.S., Chan, H.S , "Control of Blanks in the Analysis of Phthalates in Air and Ocean Biota Samples," U.S. National Bureau of Standards. Special Publication 442, pp 701 708, 1976.

6. "Carcinogens—Working With Carcinogens," Department of Health, Education, and Welfare, Public Health Service. Center for Disease Control, National Institute for Occupational Safety and Health, Publication No. 77-206, Aug. 1977

7. "OSHA Safety and Health Standards, General Industry," (29 CFR 1910), Occupational Safety and Health Administration, OSHA 2206, (Revised, January 1976).

8. "Safety in Academic Chemistry Laboratories," American Chemical Society Publication, Committee on Chemical Safety, 3rd Edition, 1979.

9. Mills, P.A., "Variation of Florisil Activity: Simple Method for Measuring Absorbent Capacity and Its Use in Standardizing Florisil Columns," *Journal of the Association of Official Analytical Chemists, 51,* 29 (1968).

10. "Handbook for Analytical Quality Control in Water and Wastewater Laboratories," EPA-600/4-79-019, U.S. Environmental Protection Agency, Environmental Monitoring and Support Laboratory, Cincinnati, Ohio 45268, March 1979.

11. ASTM Annual Book of Standards, Part 31, D3370, "Standard Practice for Sampling Water," American Society for Testing and Materials, Philadelphia, PA. p. 76, 1980.

12. "Methods 330.4 (Titrimetric, DPD-FAS) and 330 5 (Spectrophotometric, DPD) for Chlorine, Total Residual," Methods for Chemical Analysis of Water and Wastes, EPA 600-4/79-020, U S Environmental Protection Agency, Environmental Monitoring and Support Laboratory, Cincinnati, Ohio 45268, March 1979.

13. Goerlitz, D.F. and Law, L.M., *Bulletin for Environmental Contamination and Toxicology, 6* 9 (1971).

14. "Manual of Analytical Methods for the Analysis of Pesticides in Human Environmental Samples," U.S. Environmental Protection Agency, Health Effects Research Laboratory, Research Triangle Park, N.C., EPA Report 600/8-80-038, Section 11,B, p.6.

15 Burke, J.A., "Gas Chromatography for Pesticide Residue Analysis; Some Practical Aspects," *Journal of the Association of Official Analytical Chemists, 48,* 1037 (1965).

16. Webb, R.G., and McCall, A.C., "Quantitative PCB Standards for Electron Capture Gas Chromatography," *Journal of Chromatographic Science, 11,* 366 (1973)

17. "Method Detection Limit and Analytical Curve Studies, EPA Methods 606, 607, and 608," Special letter report for EPA Contract 68-03-2606. Environmental Monitoring and Support Laboratory—Cincinnati, Ohio 45268.

Table 1. *Chromatographic Conditions and Method Detection Limits*

Parameter	Retention Time (min.) Column 1	Retention Time (min.) Column 2	Method Detection Limit µg/L
α-BHC	1.35	1.82	0.003
γ-BHC	.70	2.13	0.004
β-BHC	1.90	1.97	0.006
Heptachlor	2.00	3.35	0.003
δ-BHC	2.15	2.20	0.009
Aldrin	2.40	4.10	0.004
Hepachlor epoxide	3.50	5.00	0.083
Endosulfan I	4.50	6.20	0.014
4,4'-DDE	5.13	7.15	0.004
Dieldrin	5.45	7.23	0.002
Endrin	6.55	8.10	0.006
4,4'-DDD	7.83	9.08	0.011
Endosulfan II	8.00	8.28	0.004
4,4'-DDT	9.40	11.75	0.012
Endrin aldehyde	11.82	9.30	0.023
Endosulfan sulfate	14.22	10.70	0.066
Chlordane	mr	mr	0.014
Toxaphene	mr	mr	0.24
PCB-1016	mr	mr	nd
PCB-1221	mr	mr	nd
PCB-1232	mr	mr	nd
PCB-1242	mr	mr	0.065
PCB-1248	mr	mr	nd
PCB-1254	mr	mr	nd
PCB-1260	mr	mr	nd

Column 1 conditions: Supelcoport (100/120 mesh) coated with 1.5% SP-2250/1.95% SP-2401 packed in a 1.8 m long × 4 mm ID glass column with 5% Methane/95% Argon carrier gas at a flow rate of 60 mL/min. Column temperature isothermal at 200°C, except for PCB-1016 through PCB-1248, which should be measured at 160°C.

Column 2 conditions: Supelcoport (100/120 mesh) coated with 3% OV-1 in a 1.8 m long × 4 mm ID glass column with 5% Methane/95% Argon carrier gas at a flow rate of 60 mL/min. Column temperature, isothermal at 200°C, for the pesticides; 140°C for PCB-1221 and 1232; 170°C for PCB-1016 and 1242 to 1268.

mr — Multiple peak response. See Figures 2 thru 10.

nd — Not determined.

Table 2. *Distribution of Chlorinated Pesticides and PCBs into Florisil Column Fractions[2]*

Parameter	Percent Recovery by Fraction: Fraction 1	Fraction 2	Fraction 3
Aldrin	100		
α-BHC	100		
β-BHC	97		
δ-BHC	98		
γ-BHC	100		
Chlordane	100		
4,4'-DDD	99		
4,4'-DDE	98		
4,4'-DDT	100		
Dieldrin	0	100	
Endosulfan I	37	64	
Endosulfan	0	7	91
Endosulfan sulfate	0	0	106
Endrin	4	96	
Endrin aldehyde	0	68	26
Heptachlor	100		
Heptachlor epoxide	100		
Toxaphene	96		
PCB-1016	97		
PCB-1221	97		
PCB-1232	95	4	
PCB-1242	97		
PCB-1248	103		
PCB-1254	90		
PCB-1260	95		

Eluant composition by fraction:
Fraction 1 — 6% ethyl ether in hexane
Fraction 2 — 15% ethyl ether in hexane
Fraction 3 — 50% ethyl ether in hexane

Table 3. *Single Operator Accuracy and Precision*

Parameter	Average Percent Recovery	Standard Deviation %	Spike Range (µg/L)	Number of Analyses	Matrix Types
Aldrin	89	2.5	2.0	15	3
α-BHC	89	2.0	1.0	15	3
β-BHC	88	1.3	2.0	15	3
δ-BHC	86	3.4	2.0	15	3
γ-BHC	97	3.3	1.0	15	3
Chlorane	93	4.1	20	21	4
4-4'-DDD	92	1.9	6.0	15	3
4,4'-DDE	89	2.2	3.0	15	3
4,4'-DDT	92	3.2	8.0	15	3
Dieldrin	95	2.8	3.0	15	2
Endosulfan I	96	2.9	3.0	12	2
Endosulfan II	97	2.4	5.0	14	3
Endosulfan sulfate	99	4.1	15	15	3
Endrin	95	2.1	5.0	12	2
Endrin aldehyde	87	2.1	12	11	2
Heptachlor	88	3.3	1.0	12	2
Heptachlor epoxide	93	1.4	2.0	15	3
Toxaphene	95	3.8	200	18	3
PCB-1016	94	1.8	25	12	2
PCB-1221	96	4.2	55-110	12	2
PCB-1232	88	2.4	110	12	2
PCB-1242	92	2.0	28-56	12	2
PCB-1248	90	1.6	40	12	2
PCB-1254	92	3.3	40	18	3
PCB-1260	91	5.5	80	18	3

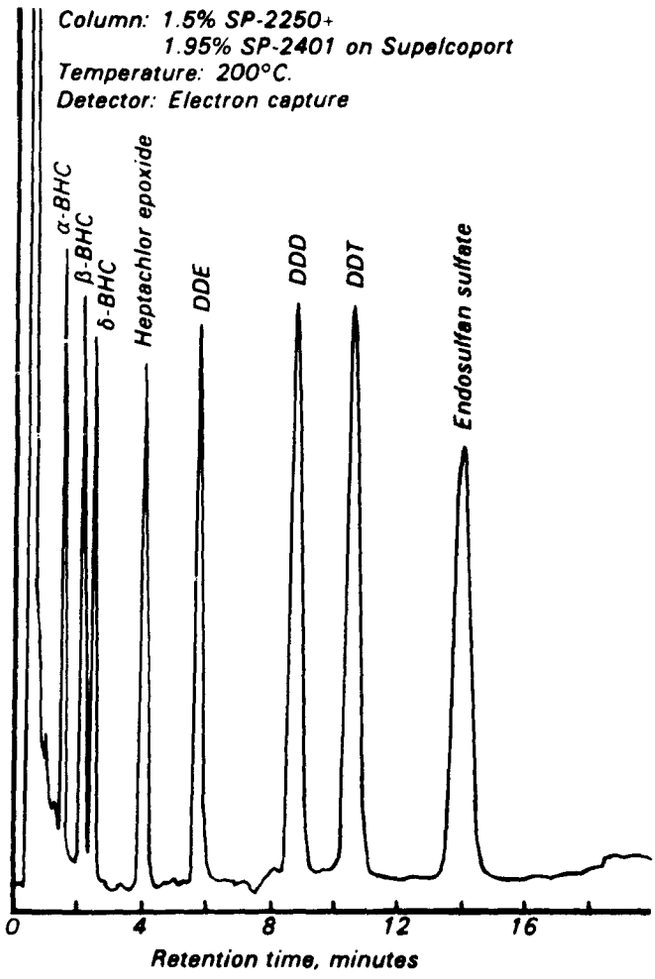

Figure 1. *Gas chromatogram of pesticides.*

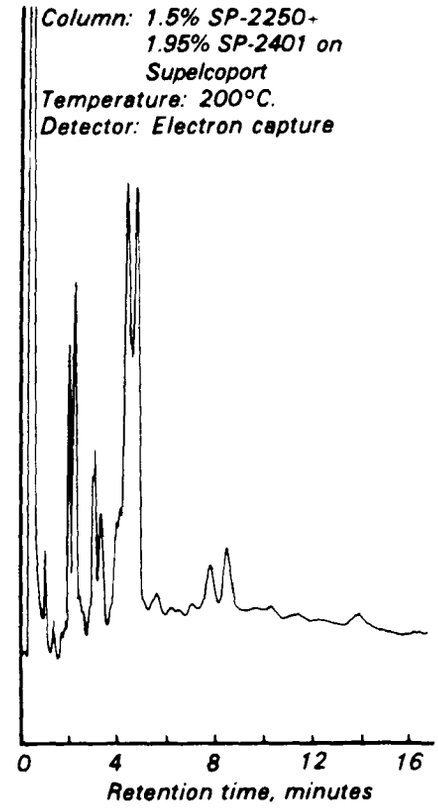

Figure 2. *Gas chromatogram of chlordane.*

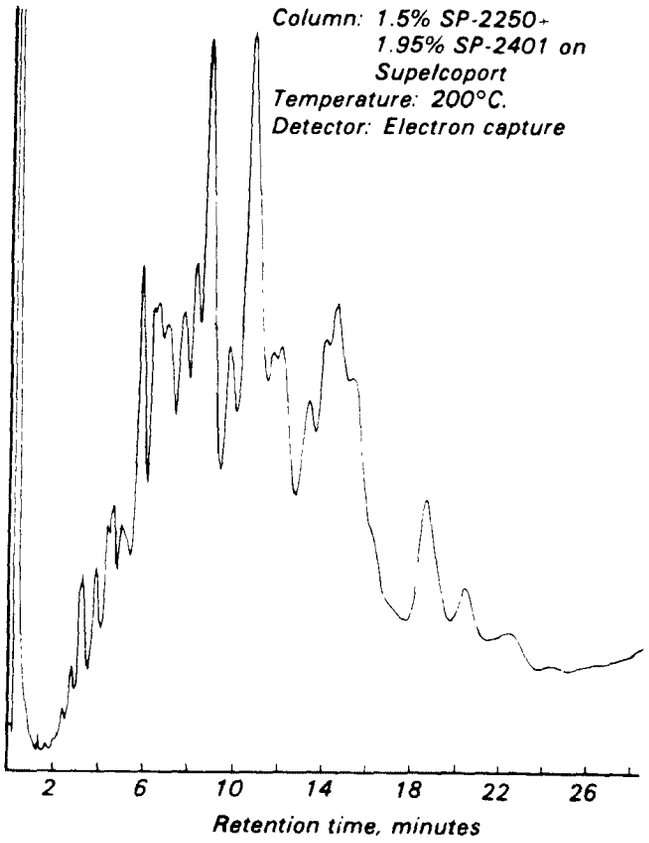

Figure 3. *Gas chromatogram of toxaphene*

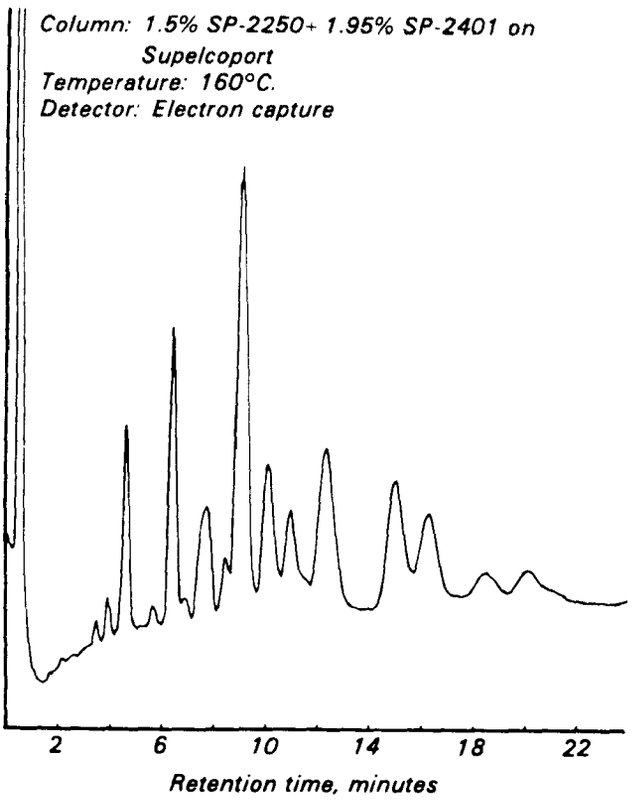

Figure 4. *Gas chromatogram of PCB-1016.*

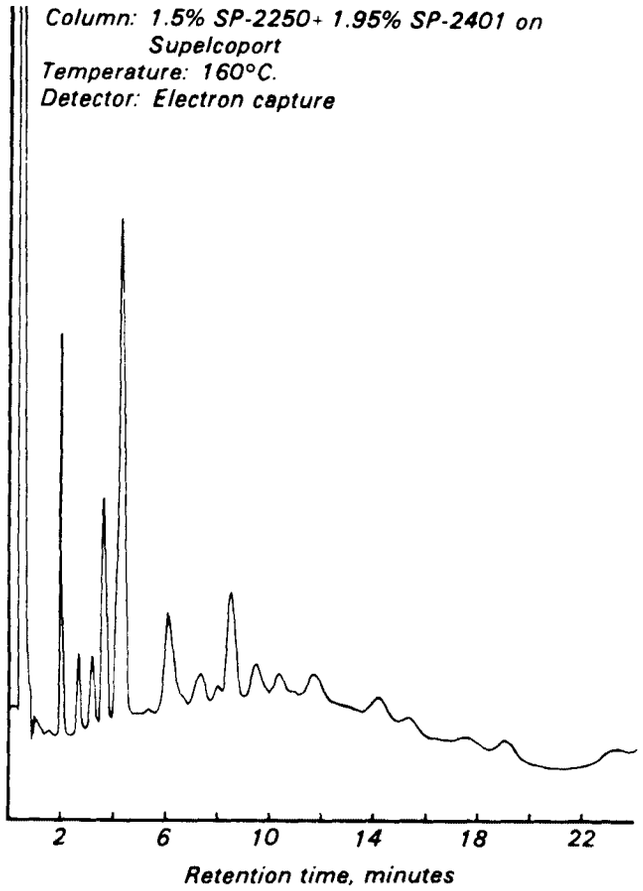

Figure 5. *Gas chromatogram of PCB-1221.*

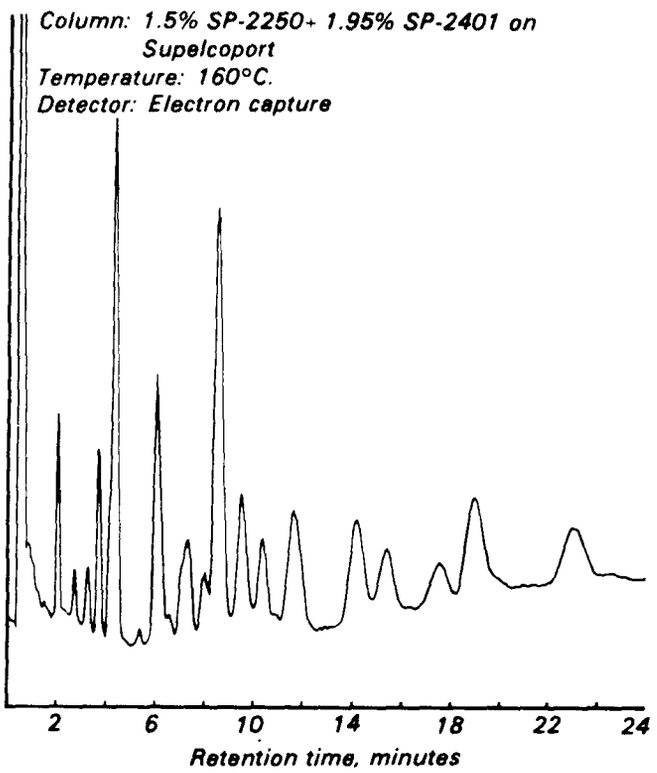

Figure 6. *Gas chromatogram of PCB-1232.*

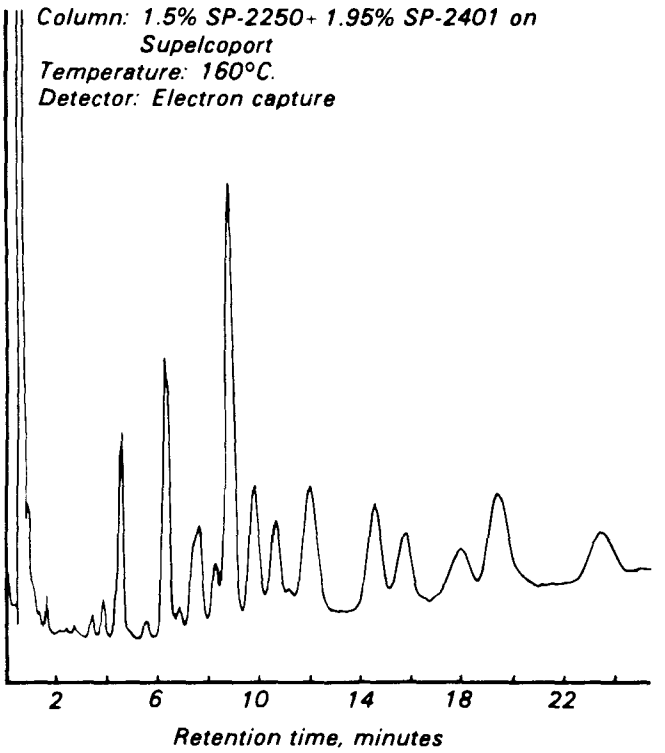

Figure 7. *Gas chromatogram of PCB-1242.*

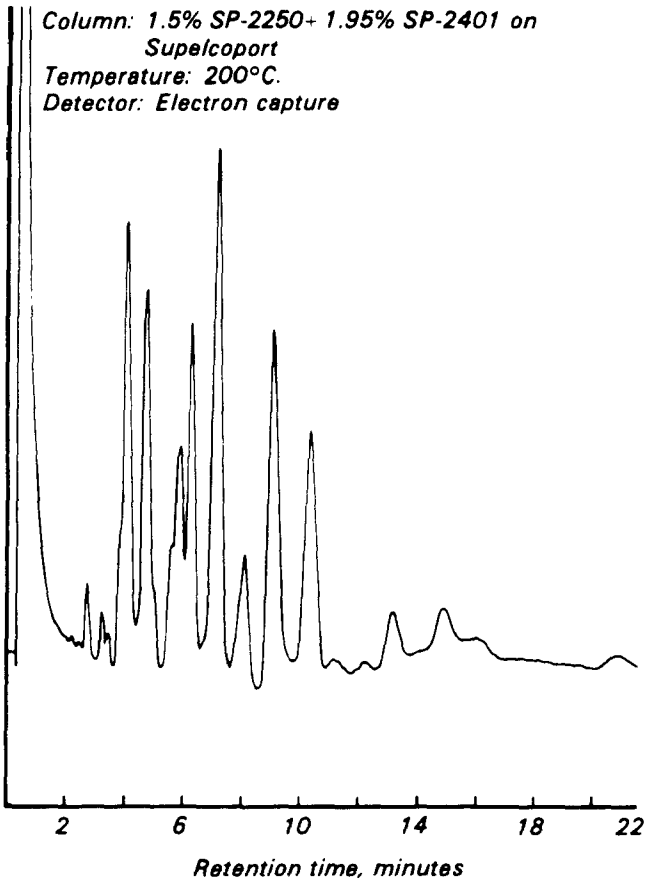

Figure 9. *Gas chromatogram of PCB-1254.*

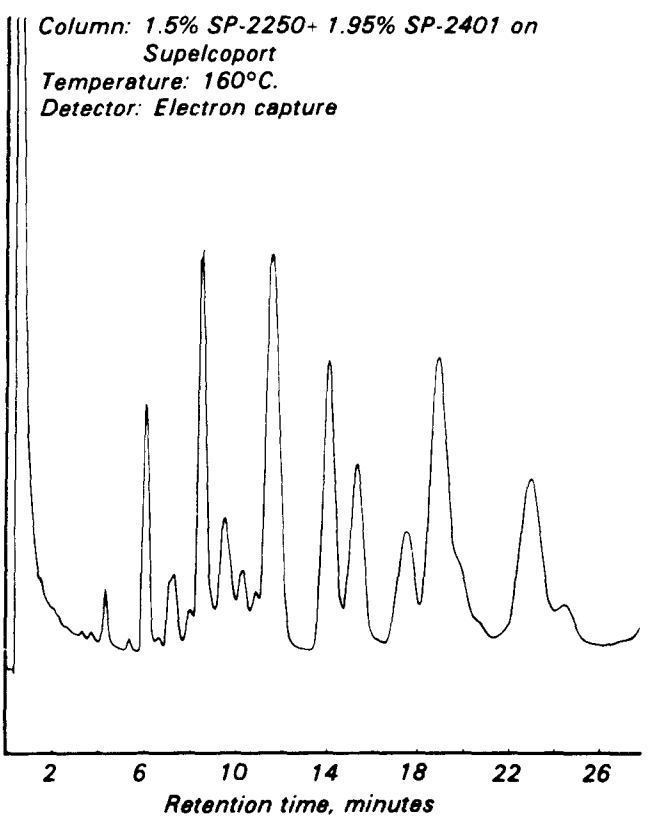

Figure 8. *Gas chromatogram of PCB-1248.*

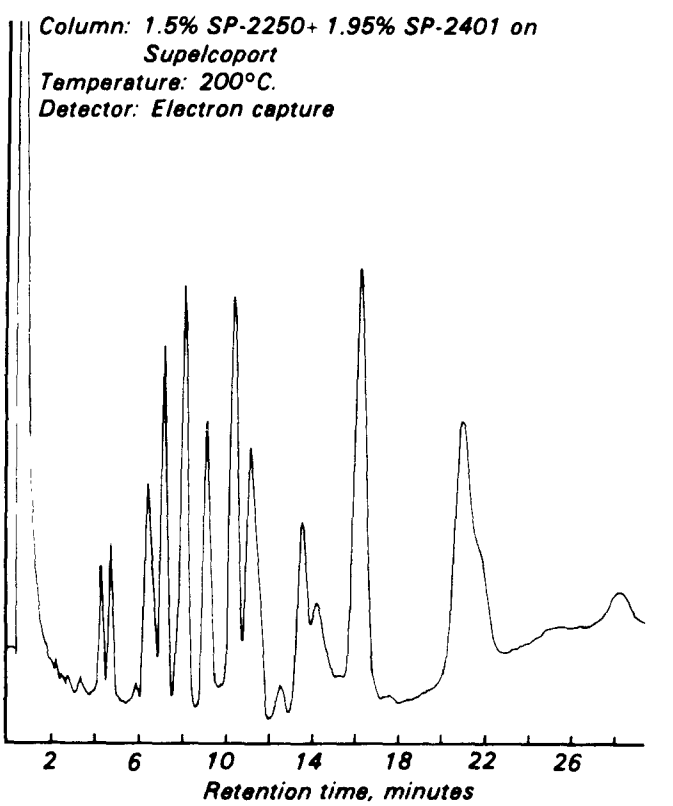

Figure 10. *Gas chromatogram of PCB-1260.*

July 1982

U.S. GOVERNMENT PRINTING OFFICE 1984 759-102/0944