United States
Environmental
Protection Agency

Office of Solid Waste
and Emergency Response
Washington, DC 20460

Office of Air
and Radiation
Washington, DC 20460

Office of Research
and Development
Washington, DC 20460

EPA/530-SW-87-021d
June 1987

EPA

Municipal Waste Combustion Study

Flue Gas Cleaning Technology

U.S. Environmental Protection Agency
Region 5, Library (5PL-16)
230 S. Dearborn Street, Room 1670
Chicago, IL 60604

EPA/530-SW-87-021d
June 1987

MUNICIPAL WASTE COMBUSTION STUDY: FLUE GAS CLEANING TECHNOLOGY

Prepared by:

Charles B. Sedman
and
Theodore G. Brna
Air and Energy Engineering Laboratory
U.S. Environmental Protection Agency
Research Triangle Park, North Carolina 27711

Prepared for:
U.S. Environmental Protection Agency
Office of Solid Waste
Washington, DC 20460

EPA REVIEW NOTICE

This document has been approved for publication by the Office of Solid Waste, U.S. Environmental Protection Agency. Approval does not signify that the contents necessarily reflect the view and policies of the Environmental Protection Agency, nor does the mention of trade names or commercial products constitute endorsement or recommendation for use.

TABLE OF CONTENTS

		Page
EPA Review Notice		ii
List of Figures		iv
List of Tables		v
Acknowledgements		vii
CHAPTER 1	INTRODUCTION	1-1
CHAPTER 2	PARTICULATE MATTER CONTROL	2-1
	2.1 Electrostatic Precipitators	2-1
	2.1.1 Principles of ESP Design	2-1
	2.1.2 Factors Affecting ESP Performance	2-3
	2.1.3 Design Considerations	2-6
	2.1.4 Performance of ESPs	2-7
	2.2 Fabric Filters	2-7
	2.2.1 Theory and Principles of Filtration	2-7
	2.2.2 Gas Stream Factors that Affect Fabric Filter Design and Operation	2-12
	2.2.3 Fabric Filter Systems	2-14
	2.3 Wet Scrubbers	2-19
CHAPTER 3	GASEOUS EMISSION CONTROLS	3-1
	3.1 Acid Gas Scrubbers (HCl and HF only)	3-1
	3.2 Post Combustion NO_x Control	3-1
	3.2.1 Selective Catalytic Reduction (SCR)	3-1
	3.2.2 Wet NO_x Removal Processes	3-6
CHAPTER 4	MULTIPOLLUTANT CONTROL SYSTEMS	4-1
	4.1 Wet Scrubbing	4-1
	4.1.1 Wet Scrubbing for Acid Gases (HCl, HF, and SO_2)	4-1
	4.1.2 Wet Scrubbing for Acid Gases and NO_x	4-3
	4.1.3 Performance of Wet Scrubbers	4-4
	4.2 Dry and Semi-Dry Scrubbing	4-5
	4.2.1 Dry Injection Processes	4-5
	4.2.2 Semi-Dry Scrubbing	4-13
	4.3 Combination Scrubbers	4-16
	4.3.1 Semi-Dry/Dry Scrubbing	4-16
	4.3.2 Semi-Dry/Wet Scrubbing	4-20
CHAPTER 5	EFFECTIVENESS OF FLUE GAS CLEANING METHODS	5-1
	5.1 Particulate Matter Control	5-1
	5.2 Acid Gas Control	5-1
	5.3 Post Combustion NO_x Control	5-3
	5.4 Post Combustion Organic Pollutant Control	5-3
	5.5 Heavy Metals Control	5-4
CHAPTER 6	OPERATION AND MAINTENANCE OF FLUE GAS CLEANING SYSTEM	6-1
	6.1 Electrostatic Precipitators	6-1
	6.2 Fabric Filters	6-5
	6.3 Scrubbers	6-5
	6.3.1 Lime/Limestone Wet Scrubbing	6-10
	6.3.2 Semi-Dry Scrubbing	6-15
REFERENCES		

LIST OF FIGURES

Figure		Page
2-1	Principles of the electrostatic precipitation process.....	2-2
2-2	Diagram of a two-field, weighted-wire ESP.....	2-8
2-3	PM emissions vs. SCA for best-fit equations.....	2-9
2-4	Municipal waste incinerator equipped with dry flue gas cleaning system.....	2-11
2-5	Small shaker-type fabric filter.....	2-15
2-6	Example of a large reverse-air fabric filter.....	2-16
2-7	Example of a small pulse-jet fabric filter.....	2-18
3-1	Acid gas scrubber.....	3-2
3-2	SCR options for municipal incinerators.....	3-5
4-1	Lime scrubbing for acid gas and SO_2 removal.....	4-2
4-2	Dry absorption system, Malmo, Sweden.....	4-6
4-3	Circulating fluid bed absorption (dry) process.....	4-12
4-4	Spray absorption (semi-dry) process.....	4-12
4-5	Semi-dry/dry scrubber.....	4-17
4-6	Semi-dry/wet scrubber.....	4-21
5-1	Saturation points of metal and metal compounds.....	5-6

LIST OF TABLES

Table		Page
2-1	Partial list of MWC/ESP applications	2-3
2-2	Plant test data	2-10
3-1	SCR plant designs for sludge incinerator flue gas	3-4
4-1	Wet scrubber outlet emissions	4-4
4-2	Inlet pollutant concentration and pollutant control with a lime dry injection process	4-7
4-3	Summary of key operating parameters	4-8
4-4	PCDD concentrations (ng/Nm^3 @ 8% O_2) in flue gas and efficiency of removal	4-9
4-5	PCDF concentrations (ng/Nm^3 @ 8% O_2) in flue gas and efficiency of removal	4-9
4-6	Percent removal of other organics	4-10
4-7	Inlet/outlet metal concentrations (μg/Nm^3 @ 8% O_2)	4-10
4-8	Hydrogen chloride concentrations (@ 8% O_2) and removal efficiencies	4-11
4-9	Sulfur dioxide concentrations (@ 8% O_2) and removal efficiencies	4-11
4-10	Outlet emission guarantees for municipal waste combustors	4-14
4-11	Acid gas emissions from municipal waste combustor	4-15
4-12	Trace heavy metals control by pilot plant FGC systems	4-15
4-13	Pollutant emissions and control by semi-dry/dry scrubbing	4-16
4-14	Summary of emission results for tests of September - October, 1986 at the Marion County, OR waste-to-energy facility	4-18
4-15	Permitted emissions from the Marion County, OR waste-to-energy facility	4-19

LIST OF TABLES (cont'd)

Table		Page
4-16	Expected pollutant emissions from MWC equipped with semi-dry/wet scrubbing.....	4-20
5-1	Effectiveness of acid gas controls (% Removal).....	5-2
5-2	Spray dryer control of selected organic pollutants.....	5-4
6-1	Inspections for ESP.....	6-2
6-2	Typical maintenance inspection schedule for a fabric filter system.....	6-6
6-3	Routine inspection data for reverse air fabric filters..	6-8
6-4	Routine inspection data for pulse-jet fabric filters....	6-9

ACKNOWLEDGEMENTS

The authors express their appreciation to the numerous persons who provided information for this report. Especially noteworthy were the contributions of Claus Jorgensen (Acurex Corporation) regarding European technology and test data; James D. Kilgroe and Julian W. Jones (Air and Energy Engineering Research Laboratory) for their constructive reviews of the initial draft report; Abe Finkelstein and Raymond Klicius (Environment Canada) for NITEP program data and results; James Crowder and Peter Schindler (EPA's Office of Air Quality and Planning Standards) regarding emissions data and results; and Steve Green (EPA's Office of Solid Waste) and Glynda Wilkins (Radian Corporation) for their assistance in revising and finalizing the report. Many useful comments were received from industrial, environmental, and other interested organizations in response to the release of the draft report for public comment. Most comments have been addressed in the revised report as permitted by the data and time available. Although too numerous to mention the respondents here, their comments are gratefully acknowledged and have, hopefully, resulted in a more comprehensive and soundly based report.

1.0 INTRODUCTION

This report presents the results of a recent study of flue gas cleaning technology applied to municipal waste combustors. The information presented here was developed during a comprehensive, integrated study of municipal waste combustion. An overview of the findings of this study is included in the Report to Congress on Municipal Waste Combustion (EPA/530-SW-87-021a). Other technical volumes issued as part of the Municipal Waste Combustion Study include:

- o Emission Data Base for Municipal Waste Combustors (EPA/530-SW-87-021b)
- o Combustion Control of Organic Emissions (EPA/530-SW-87-021c)
- o Cost of Flue Gas Cleaning Devices (EPA/530-SW-87-021e)
- o Sampling and Analysis of Municipal Waste Combustors (EPA/530-SW-87-021f)
- o Assessment of Health Risks Associated with Exposure to Municipal Waste Combustion Emissions (EPA/530-SW-87-021g)
- o Characterization of the Municipal Waste Combustion Industry (EPA/530-SW-87-021h)
- o Recycling of Solid Waste (EPA/530-SW-87-021i)

Until recently post combustion emission control technology was applied to waste incinerators strictly for particulate matter removal. Early installations used either electrostatic precipitators (ESPs) or wet scrubbers to meet local and state emission codes. With the advent of 40CFR60 Subpart E, the New Source Performance Standards for municipal incinerators in the early 1970's, the ESP became the dominant choice. This is reflected by recent studies which indicate that 75 percent of conventional incinerators in the United States use ESPs and 20 percent wet scrubbers.[1]

Because several foreign governments are regulating pollutants other than particulate matter (notably Japan and some in Western Europe), many advanced concepts for scrubbing acid gases--sulfur dioxide (SO_2), hydrochloric acid (HCl), and hydrofluoric acid (HF)--have been commercially applied. State and local regulations in the U.S. are requiring the control of these and other pollutants in new municipal waste combustion (MWC) facilities and those now being planned. These control systems include wet, dry, and semi-dry scrubbers and fabric filters (FFs) or ESPs. More recent concern over trace metals emissions, organics such as dioxins and furans, and nitrogen oxides have reinforced the selection of scrubbers as well as post-combustion NO_x control.

The combustion process is important in controlling organics, such as dioxins and furans. Post combustion emission control technology is not a substitute for good combustion, although it may remove some pollutants resulting from poor combustion. Its use is aimed at controlling acid gases and particulate matter to permitted levels, but it may also effect some control of volatile and semi-volatile organics and trace metals while achieving its primary aims. Post combustion emission control technology also offers an alternative for controlling NO_x downstream of the combustor or boiler if such control is required.

The major focus of this report is on the use of scrubbers to control pollutants in flue gas. Scrubbers have been classified as either wet or dry depending on whether the cleaned flue gas leaving the scrubbing system is saturated or not. With this classification, a wet scrubbing system emits a saturated flue gas (generally with water vapor), while a dry scrubber has a gaseous effluent which is unsaturated. In the U.S., SO_2 scrubbers are called wet and dry when the solids from the scrubbers are wet and dry, respectively. Scrubber terminology in other countries often uses "semi-dry" or "wet/dry" and "dry" scrubber. The former usually applies to a spray dryer and fabric filter or ESP system in which the sorbent enters the spray dryer as a slurry or solution, and the cleaned flue gas leaves the particulate (dust) collector unsaturated. A "dry" scrubber, as often used in the same countries, refers to a dry powdered sorbent being injected into the flue gas duct or a reactor upstream of the particulate collector (either a baghouse or ESP), with an unsaturated, cleaned flue gas leaving this collector. Because of references to scrubbing systems developed or being developed outside the U.S. in this report, semi-dry and wet/dry scrubbing in this report means that a dirty, hot flue gas from a boiler (steam generator) or a following air preheater contacts a wet reagent in a spray dryer, but the gas stream leaves the spray dryer unsaturated before entering the particulate collector of the flue gas cleaning system. It is also noted that in the U.S. a scrubbing system with either a spray dryer or a dry-injected sorbent into the flue gas upstream of the particulate collector is commonly called a "dry" scrubber.

In-furnace NO_x control (thermal $DeNO_x$ and flue gas recirculation) is not discussed in this report as it is more appropriate to a companion report in the Municipal Waste Combustion series.[2] However, post combustion NO_x control [selective catalytic reduction (SCR) and wet NO_x scrubbing] is addressed in Chapter 3 of this report.

The following chapters will describe briefly each generic control system, design and operating considerations, and control effectiveness on selected pollutants. Control systems which reflect the most prevalent current U.S. practice--that of particulate matter control--are discussed initially, followed by gaseous controls, and finally, the more advanced multipollutant control systems. Chapter 5 summarizes the effectiveness of the control systems discussed in the preceding three chapters for particulate matter, selected acid gas, selected organic pollutants, and selected trace heavy metals. Since the data from commercial municipal solid waste incinerators are limited, pilot plant data were also considered in reporting the control effectiveness of some pollutants. The final chapter, Chapter 6, addresses the operation and maintenance of flue gas cleaning systems.

2.0 PARTICULATE MATTER CONTROL

2.1 Electrostatic Precipitators[3,4]

2.1.1 Principles of ESP Design

Review of ESP Fundamentals. The basic steps of the electrostatic precipitation process are: (1) development of a current of negative molecular ions, from a high voltage corona discharge, that is used to charge dust particles in the gas stream; (2) development of an electric field in the gas space between the high voltage discharge electrode and the collection electrode that propels the negatively charged ions and particulate matter toward the collection electrode; and (3) removal of the collected particulate matter into hoppers by use of a rapping mechanism. The basic principles of electrostatic precipitation are illustrated in Figure 2-1.

The electrostatic precipitation process occurs within an enclosed chamber. A high voltage transformer and a rectifier converts the alternating current (a.c.) electrical power input into direct current (d.c.). Suspended within the chamber are the grounded collection electrodes (metal plates) which are connected to the grounded steel framework of the supporting structure. Suspended between the collection plates are the high voltage discharge (wire) electrodes (corona electrodes) which are insulated from ground and negatively charged with voltages ranging from 20 kV to 100 kV. The large difference in voltage between the discharge electrodes and collection electrodes and the interelectrode space charge of ions and charged particles create the electric field that drives the ions and particles toward the collection electrodes. The particles may travel some distance through the ESP before they are collected or they may be collected, reentrained, and collected again.

The last step of the process involves the removal of the dust from the collection electrodes. In dry ESPs, this is accomplished by periodic striking of the collection and discharge electrode with a rapping device that is activated by a solenoid, air pressure, or gravity after release of a magnetic field, or through a series of rotating cams, hammers, or vibrators. The dust is collected in hoppers and then conveyed to storage or disposal. In wet ESPs, the collected dust is removed by an intermittent or continuous stream of water that flows down over the collection electrodes and into a receiving sump.

History of MWC/ESP Applications. Lurgi installed the first electrostatic precipitator on a refuse incinerator in Zurich in 1927. Three more installations followed in Hamburg in 1930. By 1968, this manufacturer could claim 40 MWC/ESP installations in Europe and Japan, either in operation or under construction. Measured collection efficiencies of seven precipitators started up between 1961 and 1967 ranged from 98.9% to 99.9%.

A recent list of MWC/ESP installations tested between 1970 and 1985 is given in Table 2-1.[5] The trend of lower emission levels in the newer installations is evident in this table. The Munich installation

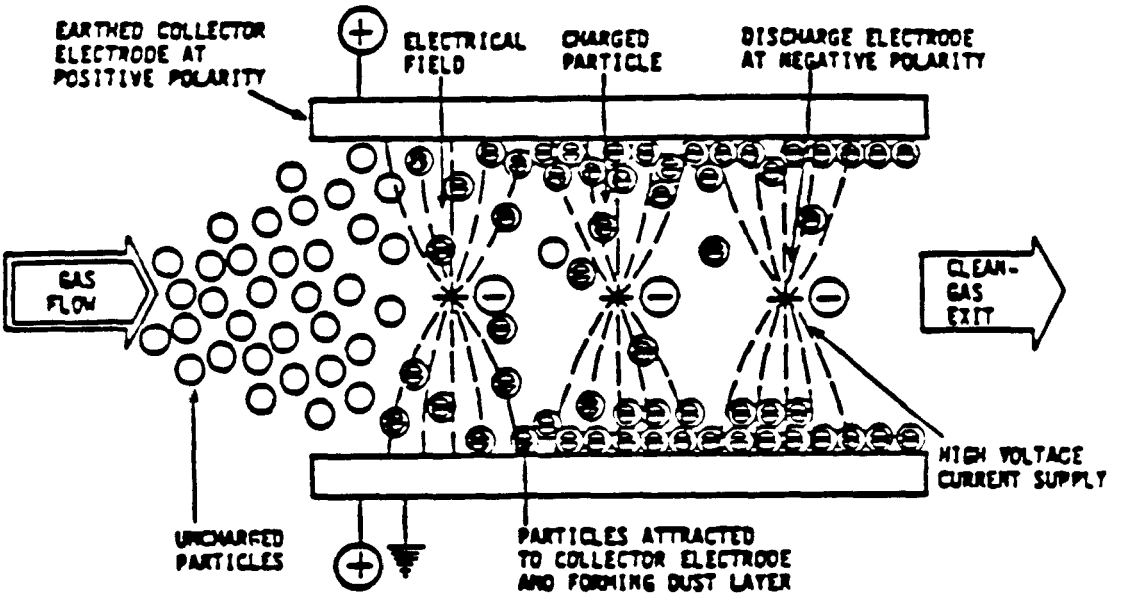

Figure 2-1. Principles of the electrostatic precipitation process.[3]

(Munich North, built in 1984) has only a two-field ESP following a cyclone and spray dryer (for acid gas control). Nevertheless, the particulate emissions are limited to 0.0104 gr/dscf by the 99.5% collection efficiency. In addition, this installation achieves average removal efficiencies of 95% for HCl, 76% for SO_2, and 96.3% to 98.4% for heavy metals in particulate form.

TABLE 2-1. PARTIAL LIST OF MWC/ESP APPLICATIONS[5]

Plant	Sample/ Report Date	Pollution Control Equipment	Particulate Emissions gr/dscf
S. W. Brooklyn, NY	1970-71	ESP	0.114/0.146
South Shore, Brooklyn, NY	1970	ESP	0.056
Dade, FL	1970	ESP	0.027
Braintree, MA	1970/78	ESP	0.108/0.083
Montreal, Canada	1970/71	ESP	0.013/0.08
Chicago, IL	1971/75	ESP	0.025/0.03
Washington, DC	1972	ESP	0.0548
Harrisburg, PA	1974	ESP	0.06
Quebec City, Canada	1974	ESP	0.095
Nashville, TN	1978	ESP	0.018
Saugus, MA	1983	ESP	0.025
Bamberg, West Germany	1983	Wet Scr/ESP	0.009
Munich, West Germany	1984	Dry Scr/ESP	0.0104
Lausanne, Switzerland	1984	Elec Scr/ESP	0.014
Baltimore, MD	1984	4 Field ESP	0.01
Westchester, NY	1985	3 Field ESP	0.016
Avesta, Sweden	1985	Cond Scr/ESP	0.0115

2.1.2 Factors Affecting ESP Performance

Several important properties of the gas stream and particulate matter determine how well an ESP will collect a given dust at a given dust loading. They include particle size distribution, gas flow rate, and particulate resistivity, which is influenced by the mineral composition and density of the particulate matter and the process temperature. These factors can also affect the corrosiveness of the dust and gas and the ability to remove the dust from the plates and wires. Brief discussions of these properties are given in the following paragraphs.

Dust Particle Size Distribution. ESP performance is very sensitive to the distribution of particle sizes in the combustion gas because of variations in the effectiveness of particle charging by molecular ions. Particle charging is least effective in the range from 0.1 to 1.0 μm. The particulate penetration through an ESP (loss to the atmosphere) is typically a

maximum somewhere in this range. On the other hand, the penetration of any particles larger than a few micrometers is due almost entirely to reentrainment. Thus, the variation in collection efficiency with particle size is typically much greater for an ESP than for a baghouse.

Dust Electrical Resistivity. Electrical current from the high voltage corona discharge in an ESP passes through the dust layer on the collection plate to reach electrical ground. The product of the average plate current density (A/cm^2) and the bulk electrical resistivity of the collected dust (ohm-cm) is a measure of the average electric field (V/cm) within the collected dust layer. When that average electric field becomes too large (greater than about 5 to 10 kV/cm), electrical breakdown occurs within voids in the dust layer. That breakdown leads to sparking and/or back corona that place the practical operating limit on the useful electrical power input to an ESP. Thus, the value of dust resistivity bears upon the useful electrification of an ESP. The electrification is usually limited below desirable levels when the dust resistivity exceeds about 6×10^{10} ohm-cm.

A dust resistivity that is too low is also undesirable. The lower limit is not well defined, but it is generally believed to lie in the range of 10^7 to 10^8 ohm-cm. Low resistivity dust is easily precipitated, but it also discharges quickly on the collecting plate. The electrical force holding the collected dust layer (against the scouring effect of the gas stream) diminishes, and reentrainment problems become severe. In precipitators serving municipal waste combustors, reentrainment problems may be associated with carbonaceous particles resulting from incomplete combustion.

Gas Flow Parameters. Uniformity of gas velocity and gas temperature is essential to the optimum performance of a precipitator. Large variations in gas temperature over the face of a precipitator can result in large variations in dust resistivity. The electrical operation of one entire precipitator field energized by a high voltage power supply will be limited by that portion of the field where the collected dust has the highest resistivity.

The average gas velocity through a precipitator determines the treatment time for charging and collecting dust particles. However, regions of low gas velocity do not compensate for other regions of high gas velocity. Optimum ESP collection efficiency is achieved with uniform gas velocity. The standard deviation of a matrix of gas velocity measurements over the face of a precipitator divided by the average value usually does not exceed 0.15 in a modern precipitator. Too low a gas velocity leads to dust deposits in the duct upstream of the ESP. Too high a gas velocity leads to scouring of collected ash from the plates of the ESP and high reentrainment. The optimum average gas velocity usually lies in the range of 3 to 6 ft/s. Considering that the ash from municipal waste combustion may have low electrical resistivity, with the accompanying tendency to reentrain particles from the collecting plates, the average gas velocity should lie at the lower end of this range.

The total volume gas flow (cfm) through an ESP is related to the designed average gas velocity by the designed face area of the ESP. Furthermore, the total volume gas flow, compared with the size of the ESP, is mathematically related to the collection efficiency of the ESP. The specific collection

plate area (SCA, defined as the ratio of the total plate area to the volume gas flow, $ft^2/1000$ cfm) appears in the exponent of the Deutsch equation which gives the theoretical collection efficiency for dust particles of a specific size.

Combustion Parameters. Stable and optimized ESP performance depends on stable and complete fuel combustion. However, control of the combustion process is particularly difficult with municipal waste as the fuel. The fuel is usually wet. Depending on the size and time of year, moisture content can vary from 20 to 60 percent by weight. Food wastes, grass and tree clippings, and other wet wastes add to the moisture content of the material. Large quantities of paper products and plastics help offset this problem somewhat. The effect of a high moisture content is to lower the heating value of the material charged. At a fixed charging rate, this in turn lowers the overall heat release rate and the combustion temperature in the furnace.

Another problem is the substantial quantity of noncombustible materials that may be charged to the incinerator. These materials include cans, other metallic materials, rocks, dirt, etc. Although paper products and plastics tend to have low ash contents, the overall "ash" content of the charged material is typically 20 to 30 percent by weight. This high ash content also contributes to a lower heating value. Considering noncombustible and moisture effects, heating values varying from 3000 to 6000 BTU/lb are not unusual.

Another problem is the variation in size of fuel. Good combustion relies on even distribution of properly sized material on the grate. The underfire air will follow the path of least resistance. If the distribution of material on the grate is uneven, the gas will channel through the path of least resistance and the remainder of the fuel bed will be "starved" for air. In some instances the time/temperature relationship in the furnace may not be sufficient to produce complete combustion. Incomplete combustion can result in ash that is high in carbon content and is easily reentrained from the ESP collection plates. Incomplete combustion can also result in condensed fumes of submicrometer particles that are more difficult to collect and more likely to create undesirable visible emissions.

Finally, the excess air in municipal waste combustion affects ESP performance. Increasing the amount of air in excess of stoichiometric requirements generally improves combustion and raises combustion temperatures. At some point, however, no real increase in combustion efficiency (or conversion of hydrocarbons to CO_2 and H_2O) results, and increasing the quantity of combustion air actually decreases the flame temperature (because both the combustion products and the excess air must be heated). This can also increase the flue gas volume leaving the incinerator. Even after the gases are cooled in an evaporative spray chamber or passed through a heat exchanger, the result is a higher gas volume flow to the ESP, which reduces the SCA and treatment time and increases the average gas velocity and the opportunity for dust reentrainment. Another report of this series[2] provides a detailed description of combustion processes.

2.1.3 Design Considerations

The design of a precipitator to clean the flue gas from municipal waste combustion presents no new problems that have not already been faced in applications to coal combustion, cement kilns, and metallurgical refining. In fact, a great deal of ESP operating experience on hundreds of incinerator applications worldwide has been acquired by ESP manufacturers in Europe, Japan, and the United States. Several considerations of special emphasis in the ESP design process are reviewed briefly in the following paragraphs, assuming no acid gas controls on the flue gas entering the ESP.

Combustion Efficiency. The main source of difficulty in ESP applications to municipal waste combustors, especially mass burn units, is the variability of waste material fired as fuel. Variations in the fuel and in the excess air supplied can cause large variations in the combustion efficiency and in critical parameters of combustion flue gas entering the ESP--gas volume flow, gas temperature, and dust particle size distribution. The precipitator design must take into account worst case conditions. This is a familiar problem in electric generating plants firing a variety of coals. In municipal incinerators, it is essential to maintain and monitor good combustion.

Acid Corrosion. The acid dew point depends on the (variable) concentrations of moisture and acid vapors (SO_2, HCl) in the combustion flue gas. Corrosion problems can be expected when the temperature in the ESP falls below 350°F without acid gas control ahead of the ESP. Heated purge air must be supplied to the high voltage bushings to keep them dry, and special precautions are required during startup and shutdown. Use of corrosion resistant materials, proper insulation, prevention of air inleakage, purging acid gas directly after shutdown, and use of an indirect heating system during shutdown can extend the life of the ESP. Prevention of acid corrosion is a familiar problem in electric generating plants firing high sulfur coal and in pulp and paper mills.

Fine Particle Collection. Particular attention must be paid to the collection of submicrometer particles because these particles tend to be enriched in heavy metals. Combustion variability complicates this design consideration because incomplete combustion tends to partition metals to the bottom ash. As combustion improves, submicrometer fumes can be controlled and finer particles can be generated. Experience with modern utility fly ash precipitators has demonstrated that an ESP which is designed for high total mass collection efficiency (99.9%) will also have satisfactory collection of fine particles although lower than for large particles and the total particulate matter.

Dust Reentrainment. Higher carbon content in the dust decreases the dust electrical resistivity and leads to increased dust reentrainment from the collecting plates. A uniform gas flow distribution, without large-scale turbulence, will minimize reentrainment problems. Proper design of the aspect ratio (length or depth of the ESP to height of the plate) and the gas flow baffling in the ESP are essential to uniform flow. After the precipitator is brought on line, the electrode rapping schedule and rapping intensity must

be gradually adjusted (over a period of many weeks) to minimize emissions from rapping reentrainment. Figures 2-2 depicts a typical ESP for existing municipal incinerators in the U.S.

2.1.4 Performance of ESPs[6]

ESP control data are available for total particulate matter, heavy metals, dioxins, and acid gases (see Reference 7). The particulate matter data have been analyzed, fitted to a modified Deutsch-Anderson equation, and correlated with specific collection area (SCA). Figure 2-4 illustrates this correlation for solid waste-fired industrial boilers. The curves shown are based on emission data and may not reflect what vendors would guarantee for a given SCA. Table 2-2 shows the data used to develop the 1986 correlation, reflecting data for high SCA ESP applications which were obtained after 1982.

Very limited performance data on control of heavy metals, dioxins, and acid gases by ESPs alone are available. Based on data from the Chicago Northwest and Andover, MA, tests, an ESP without an appreciable drop in flue gas temperature offers little or no control of volatile organics. Data in Reference 6 show that control of arsenic, chromium, and lead emissions are less than the total particulate control, suggesting that heavy metals are somewhat concentrated in the very fine particles. The limited ESP data show no appreciable reduction in mercury emissions as mercury is mainly a vapor at normal operating temperatures.

2.2 Fabric Filters

Fabric filters have not generally been applied directly to flue gas from municipal incinerators, but rather as a sorbent collector and secondary reactor for dry and semi-dry scrubbers as discussed later in Chapter 4. The basic theory and operation of fabric filtration is presented here as background for Chapter 4; no performance data will be discussed in this section.

Three reasons that fabric filters have not been applied to incinerator flue gas are: (1) attack by acid gases upon fabric, (2) fabric blinding by "sticky" particles, and (3) baghouse fires caused by unstable combustion and carryover of sparks into the flue. Electrostatic precipitators and wet scrubbers have been somewhat more forgiving to these phenomena and have generally been applied. However, with upstream scrubbing of acid gases and sorbent accumulation on fabric materials, all the above concerns are addressed and fabric filters become a very attractive choice for particulate control as well as control of other pollutants.

Figure 2.3 shows a municipal solid waste incinerator facility with a flue gas cleaning system having a fabric filter although an ESP may be used in lieu of the baghouse.

2.2.1 Theory and Principles of Filtration[8]

The five basic mechanisms for particulate collection by fibers in a fabric filter are: (1) inertial impaction, (2) Brownian diffusion, (3) direct interception, (4) electrostatic attraction, and (5) gravitational settling.

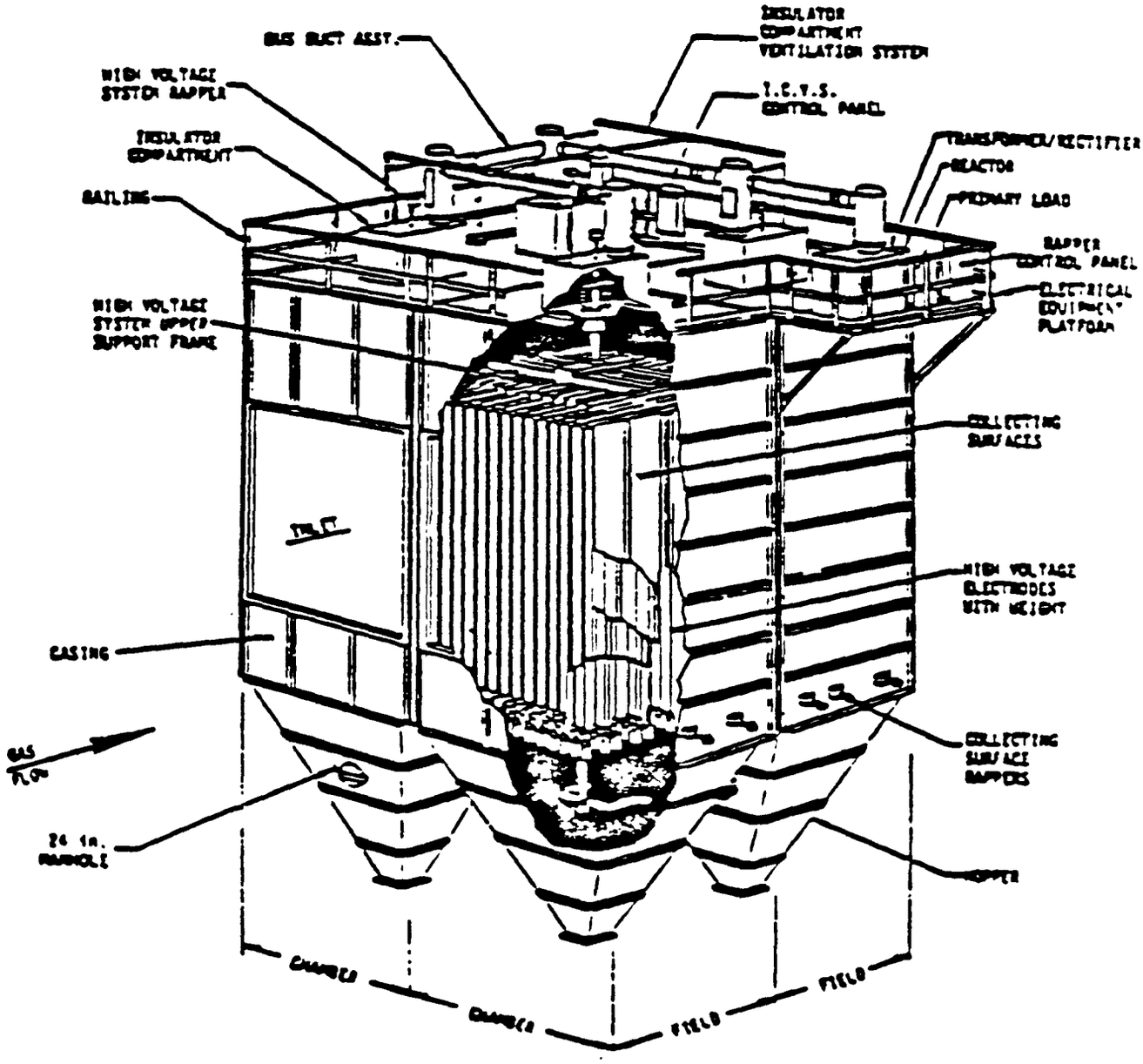

Figure 2-2. Diagram of a two-field, weighted-wire ESP.[9] (Courtesy of Western Precipitation.)

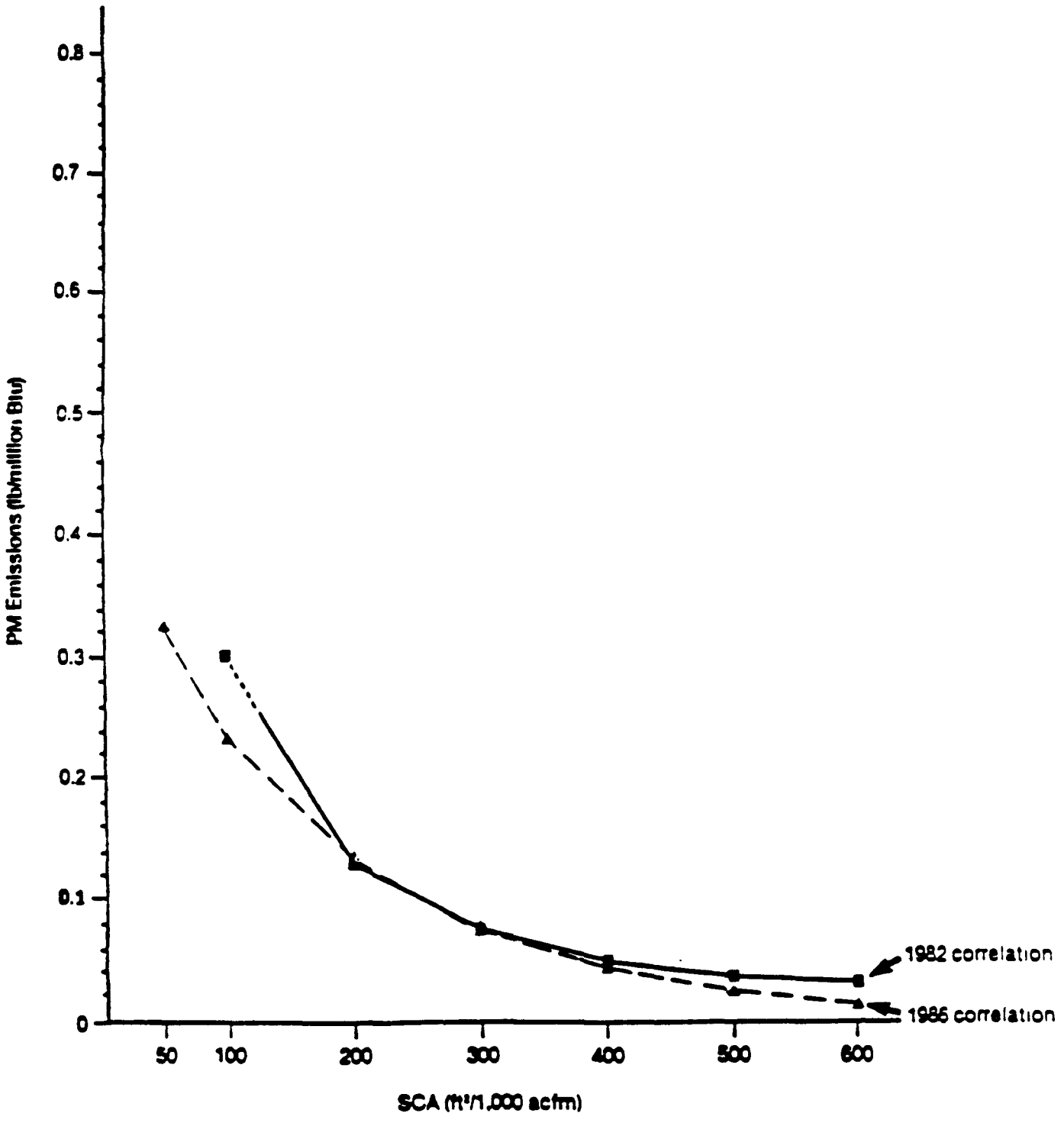

Figure 2-3. PM emissions vs. SCA for best-fit equations.[6]

TABLE 2-2. PLANT TEST DATA[6]
(1986 Correlation)

PM Emissions, $lb/10^6$ Btu	SCA, $ft^2/1,000$ cfm
0.266	138
0.167	145
0.167	134
0.092	240
0.082	246
0.083	260
0.071	297
0.099	288
0.040	343
0.059	347
0.050	630
0.053	616
0.036	474

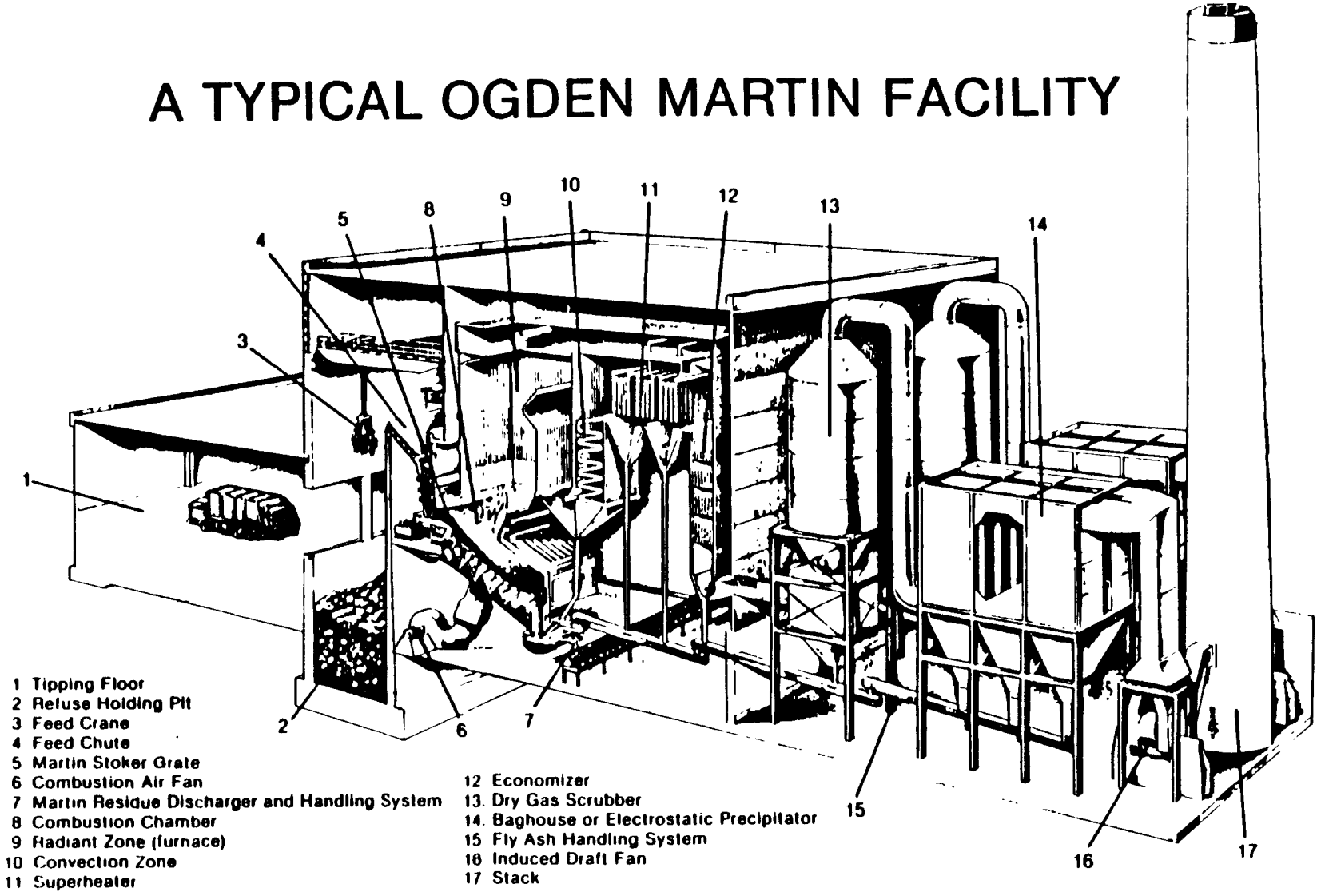

Figure 2.4. Municipal waste incinerator equipped with a dry flue gas cleaning system. (Courtesy of Ogden Martin Systems, Inc.)

Inertial impaction is the dominant collection mechanism within the dust cake. The forward motion of the particles results in impaction on fibers or on already deposited particles. Although impaction increases with higher gas velocities, these high velocities reduce the effectiveness of Brownian diffusion. Increasing the fabric and dust cake porosity by use of a less dense fabric or more frequent cleaning also reduces diffusional deposition. Except at low gas velocities, gravity settling of particles as a method of collection is usually assumed to be negligible. Electrostatic forces may affect collection because of the difference in electrical charge between the particles and the filter; however, the impact on commercial-scale equipment is not fully understood. Sieving, or particle filtering, occurs when the particle is too large to pass through the fabric matrix. It is not a major mechanism for collecting particulate. The combination of all these particle collection mechanisms results in the high efficiency removal of particulate matter.

Dust Accumulation on Fabrics. The fabric filtration process or the accumulation of particulate on a new fabric surface occurs in three phases: (1) early dust bridging of the fabric substrate, (2) subsurface dust cake development, and (3) surface dust cake development. The fabric used in a fabric filter is typically a woven or felted material, which forms the base on which particulate emissions are collected. Woven fabrics consist of parallel row of yarns in a square array. The open spaces between adjacent yarns are occupied by projecting fibers called fibrils. Felted fabrics are constructed of close, randomly intertwined fabrics that are compacted to provide fabric strength.

In the first phase, particles entering a new fabric initially contact the individual fibers and fibrils and are collected by the filtration mechanisms. These deposited particles, which are essentially lodged within the fabric structure, promote the capture of additional particles. As these particles build up during the second phase, particle aggregates form, bridging of the interweave and interstitial spaces occurs, and a more or less continuous deposit is formed. In the third phase, particles continue to collect on the previous deposit, and the surface dust cake is developed.

The cleaning cycle (via shaking, reverse air, or pulse jet) removes some of the surface cake. After a few cleaning cycles, theoretically a steady-state dust cake should be formed, which will remain until the bag is damaged, replaced, or washed. Actually, however, the dust cake can vary significantly from cycle to cycle, particularly in applications involving utility boilers or metallurgical processes. This remaining cake forms a base for the collection of particles when the bag is put back on line after cleaning.

2.2.2 Gas Stream Factors that Affect Fabric Filter Design and Operation

A complete characterization of the effluent gas stream is important in the design and operation of the fabric filter system. It should include the gas flow rate; minimum and maximum gas temperatures; acid dew point; moisture content; presence of large particulate matter; presence of sticky particulate matter; particulate mass loading; chemical, adhesion, and abrasion properties of the particulate; and presence of potentially explosive

gases or particulate matter. These data are used to design a collector with the required degree of control or to optimize the operation of an existing fabric filter, as illustrated by the following considerations:

- The size of a fabric filter system is determined by the gas volume to be filtered and the pressure drop at which the filter can be operated, given the fabric type, dust cake properties, and cleaning method. The area of fabric surface (A) is determined by multiplying the total gas flow by the selected air-to-cloth ratio (A/C), which is based on the cleaning method or type of fabric filter.

- Penetration is related to the effective A/C ratio in the system, particularly if the A/C ratio is outside the optimum range for the specific application and type of fabric filter. Therefore, the lowest possible face velocity (particle velocity at filter surface) consistent with economic constraints should be specified during the design phase. This parameter should also be considered in the operation of an existing fabric filter, if process flow rates increase significantly or additional sources are added.

- Variations in gas stream temperature over time affect the operation and design of a fabric filter. The temperature of gases emitted from industrial processes may vary more than several hundred degrees within short periods of time. It may fall below the gas moisture and acid dew points, or it may exceed the maximum temperature that the fabric will tolerate. The temperature extremes must be determined before the filter fabric is selected and during evaluation of fabric filter performance.

- The particle size distribution of the dust must be considered in the design and operation of the collector. Particle size distribution affects both the porosity of the dust cake and abrasion of the fabric. The presence of fine particles in the gas stream can create a very compact dust cake and increase the static pressure drop through the cake. These fine particles can also cause fabric bleeding if pulled through the fabric. The presence of large abrasive particles can reduce bag life and may necessitate the use of a precleaner or gas distribution devices in the collection system.

Moisture content and acid dew point are important gas composition factors. Operating a fabric filter at close to the acid dew point introduces substantial risk of corrosion, especially in localized spots close to hatches, in dead air pockets, in hoppers, or in areas adjacent to heat sinks, such as external supports. Allowing the operating temperature to drop below the water and/or acid dew point, either during startup or at normal operation, will usually cause blinding of the bags. Acids or alkali materials can also weaken the fabric and shorten its useful life. Trace components, such as fluorine, also can attack certain fabrics.

2.2.3 Fabric Filter Systems

Although the basic particulate collection mechanisms are the same for all fabric filters and gas stream factors affecting their performance are relatively similar, the equipment itself and fabrics used in fabric filter systems may vary widely among vendors and applications. Some of these variations are necessary to meet various performance capability demands and physical characteristics; others are the products of individual contributions of the numerous equipment and fabric vendors.

Although fabric filters can be classified in a number of ways, the most common way is by their method of fabric cleaning: shaker, reverse-air, and pulse-jet.

Shaker-Type Fabric Filters. A conventional shaker-type fabric filter is shown in Figure 2-5. Particulate-laden gas enters below the tube sheet and passes from the inside bag surface to the outside surface. At regular intervals a portion of the dust cake is removed by manual shaking (small systems) or mechanical shaking (large systems), the preferred method in MWC applications. Mechanical shaking of the filter fabric is normally accomplished by rapid horizontal motion induced by a mechanical shaker bar attached at the top of the bag. The shaking creates a standing wave in the bag and causes flexing of the fabric. The flexing causes the dust cake to crack, and portions are released from the fabric surface. The cleaning intensity is controlled by bag tension and by the amplitude, frequency, and duration of the shaking. Woven fabrics are generally used in shaker-type collectors. Because of the low cleaning intensity, the gas flow is stopped before cleaning begins to eliminate particle reentrainment and to allow the release of the dust cake. The cleaning may be done by bag, row, section, or compartment.

Gas flow through shaker-type fabric filters is usually limited to a low superficial velocity (numerically equals A/C ratio) of less than 3 ft/min., typically ranging from 1 to 2 ft/min. High A/C values can lead to excessive particle penetration or blinding, which reduces fabric life and results in high pressure drop. Typical A/C ratios are 2 to 6 cfm/ft^2.

Mechanical shaker-type units differ with regard to the shaker assembly design, bag length and arrangement, and type of fabric. All sizes of control systems can use the shaker design.

Reverse-Air Fabric Filters. A large and typical reverse air filter is shown in Figure 2-6.

Regardless of design differences, the cleaning principle is the same. Cleaning is accomplished by reversal of the gas flow through the filter media. The change in direction causes the surface contour of the filter surface to change (relax) and promotes dust-cake cracking. The flow of gas through the fabric assists in removal of the cake. The reverse flow may be supplied by cleaned exhaust gases or by ambient air introduced by a secondary fan.

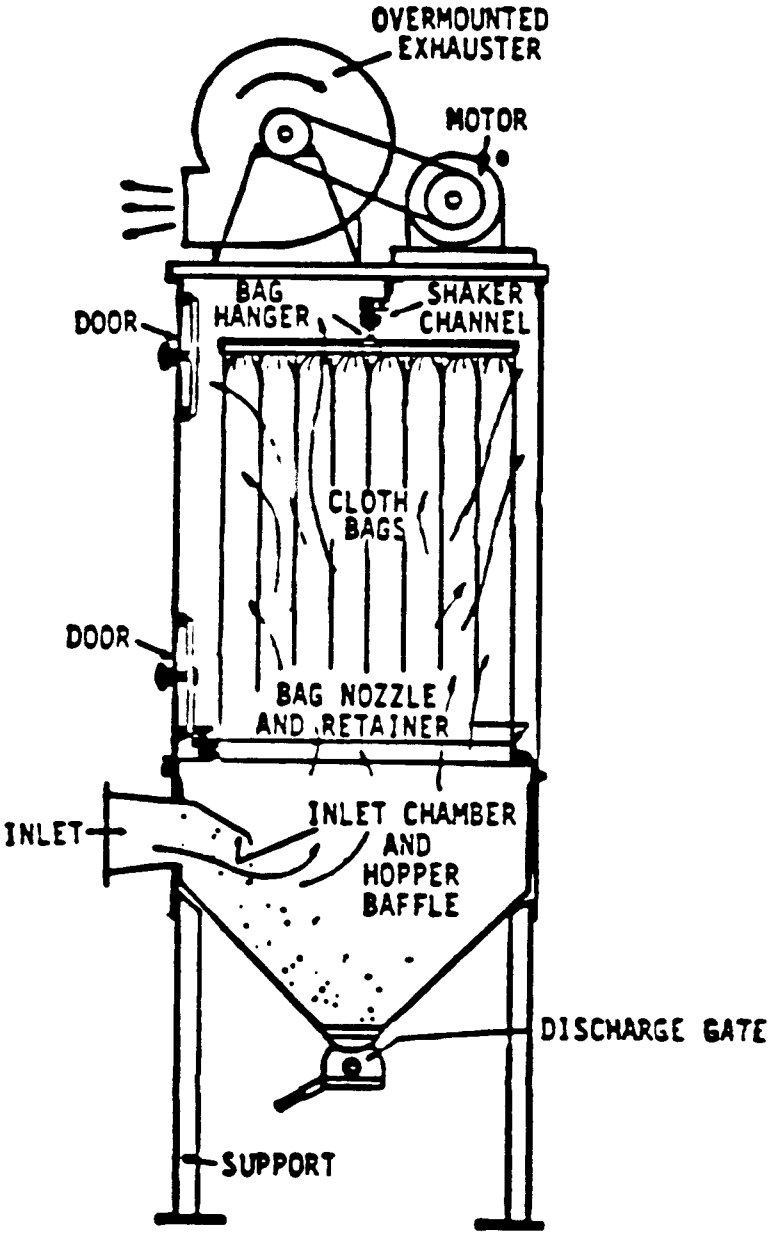

Figure 2-5. Small shaker-type fabric filter.[8]

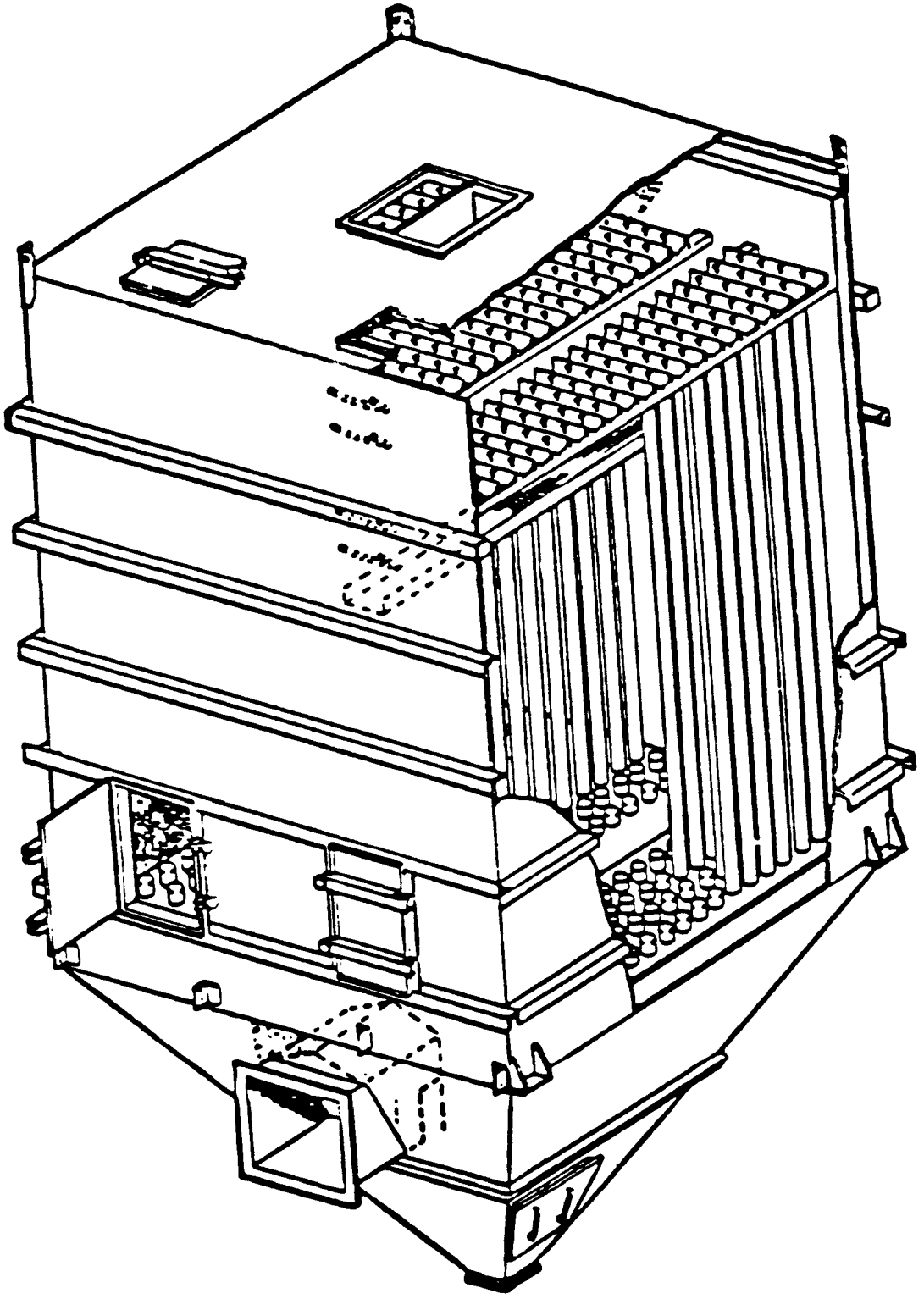

Figure 2-6. Example of a large reverse-air fabric filter.[8]

In filters with inside bag dust collection, cleaning is done with compartments isolated. The filter bags may require anticollapse rings to prevent closure of the bag and dust bridging.

Reverse-air filters are usually limited to A/C ratios of less than 3 cfm/ft^2 and a range of about 1 to 2.5 cfm/ft^2. In general, the appropriate A/C ratio for a reverse-air unit should be about one-third lower than for a similar shaker-type unit application.

Pulse-Jet Fabric Filters. In pulse-jet fabric filters, filtering takes place on exterior bag surfaces. A small pulse-jet fabric filter is illustrated in Figure 2-7. The bags supported by inner retainers (usually called cages) are suspended from a tube sheet, an upper cell plate. Compressed air for cleaning is supplied through a manifold-solenoid assembly into blow pipes. Venturis are sometimes mounted in the bag entry area to improve the pulse-jet effect and to protect the top part of the bag. The diffuser is placed at the gas inlet to prevent large particles from abrading lower portions of the bag.

During cleaning, a brief (generally less than 0.2-second) pulse of compressed air injected into the top of the bag creates a traveling wave in the fabric, which shatters the cake and throws it from the surface of the fabric. The dominant cleaning mechanism in a pulse-jet unit is fabric flexing. Felted fabrics are normally used, and the cleaning intensity (energy) is high. The cleaning usually proceeds by rows, and all bags in a row are cleaned simultaneously. The compressed-air pulse, which is delivered at 80 to 120 psi, results in local stoppage of the gas flow. The cleaning intensity is a function of compressed-air pressure. Pulse-jet units can operate at substantially higher A/C ratios than the previously discussed fabric filters because of their higher cleaning intensity. Typical ratios range from 5 to 10 cfm/ft^2.

The plenum pulse cleaning method is a variation of the pulse-jet cleaning mechanism; in this method, an entire compartment of bags is taken off-line and pulsed with compressed air from the clean air plenum.

Other Designs and Modifications. Fabric filters can be constructed either as a positive-pressure unit with the fan upstream of the fabric filter or as a negative-pressure unit with the fan downstream of the unit. Recent applications have employed the fan downstream of the fabric filter.

The use of a positive-pressure fabric filter eliminates the need for ductwork and a stack downstream of the unit, which reduces requirements for space and other materials but makes sampling to determine particulate loading more difficult. Because positive-pressure units are generally not exposed to as high a static pressure as negative-pressure units, their housings can sometimes be constructed of a bolted light-gauge material. Any leaks from the fabric filter will enter the surrounding air and increase the fugitive emissions from the unit.

In negative-pressure units, the fan is located on the clean side of the filter, where it is subject to less wear from dust abrasion. The fabric filter housing must be gas-tight, as any leaks will draw air in from the

outside. This outside air will normally cool the gas stream. This could reduce the gas temperature below the dew point and cause condensation on the inside of the unit. In some processes, introduction of outside air increases the risk of fire and/or explosion. On the other hand, leaks will not result in fugitive emissions because ambient air is drawn into the unit.

2.3 Wet Scrubbers

Wet scrubbers for particulate matter control in municipal incineration are not likely to be used in the future. Although accounting for nearly one-fifth of all particle control systems on U. S. incinerators,[1] wet scrubbers have the following disadvantages:

- cannot meet current or future particulate matter emission requirements without very high pressure losses with accompanying erosion and increased maintenance requirements,
- a liquid waste is generated, and
- water scrubbers will absorb acid gases to some extent and, if not designed to handle acids, will have significant operating problems.

In short, any wet scrubber applied to an incinerator will be designed for gas absorption/multipollutant control, and any particulate matter control will complement a fabric filter or electrostatic precipitator. For this reason wet scrubber descriptions and functions are discussed in Chapters 3 and 4.

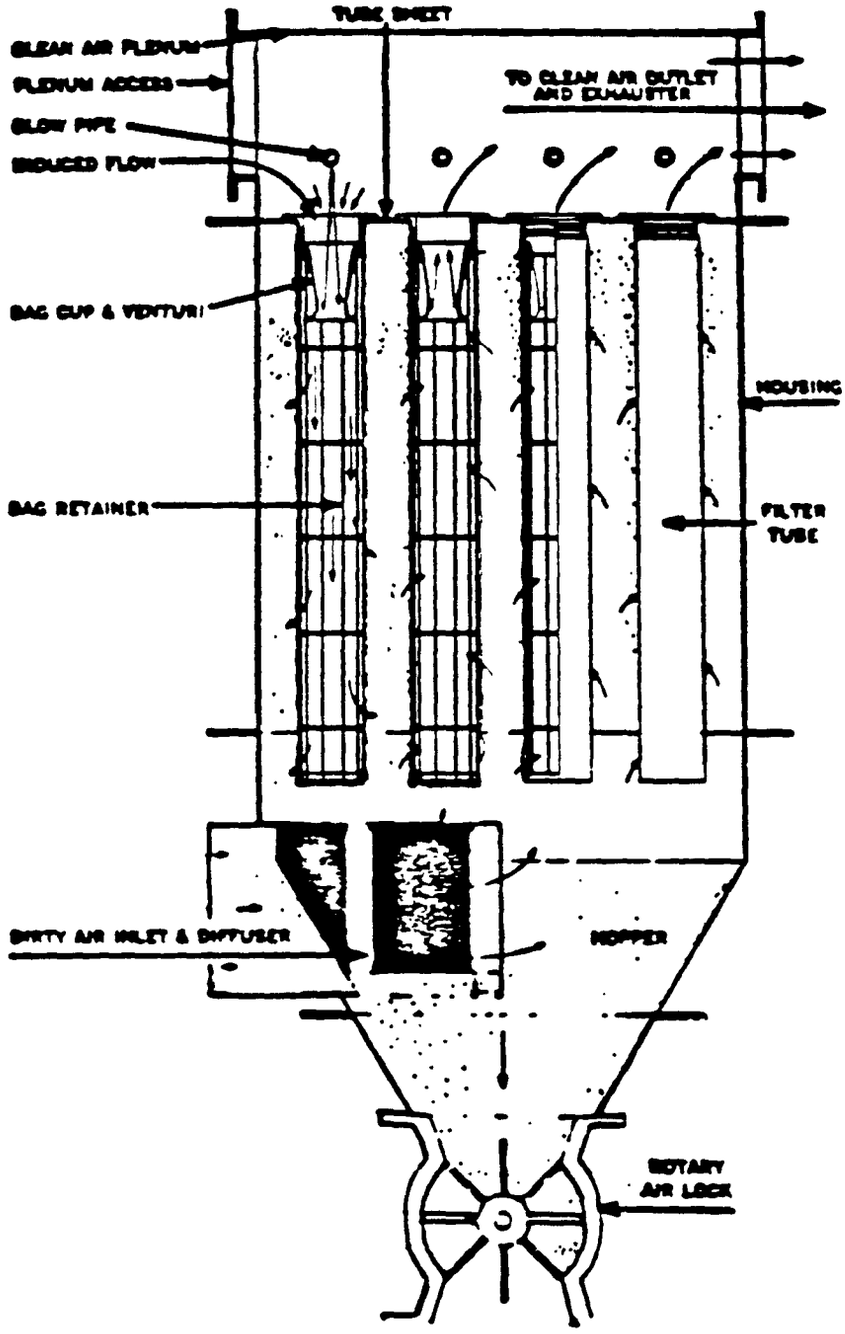

Figure 2-7. Example of a small pulse-jet fabric filter.[8]

3.0 GASEOUS EMISSION CONTROLS

Gaseous emission controls are designed for capture of a particular gas or gases and are intended for use in series with particulate control devices. Although several wet scrubbers are available for specific hydrochloric acid mist control, their use has been confined to special waste incinerator applications. Post-combustion NO_x control systems have been applied in Japan to non-incinerator combustion scrubbers and more recently to municipal incinerators. Consequently, post-combustion NO_x controls are also discussed below.

3.1 Acid Gas Scrubbers (HCl and HF only)[10]

Acid gas scrubbers are generally found in small waste incinerator applications in convenient packaged form. Using water or very dilute sodium solutions, hydrochloric acid and hydrofluoric acids are easily absorbed with little regard to operation and maintenance. However, in municipal incinerator applications with particulate matter, sulfur oxides, and condensible organics, exclusive control of acid gases becomes more complex.

Trace alkali in scrubber water can react with flue gas components to form insoluble salts; therefore, the pH must be controlled to less than 4 to limit absorption of gases other than HCl and HF and precipitation of insolubles. Calcium scrubbing is not likely for this reason, while clear liquor (sodium) scrubbing is also potentially troublesome due to erosion and corrosion.

Commercial practice in Europe has been to use water only scrubbing with minimal internals--spray towers or venturi scrubbers--at very low (0 to 1) pH to minimize absorption of other gases. Water is introduced at roughly one liter per 20-25 mg HCl to be absorbed. Water injection rate is controlled by monitoring solution conductivity. Scrubber blowdown is neutralized with lime before being discharged or further treated. HCl and HF removals over 90 percent are routinely achieved.

Scrubbers are made of corrosion-resistant materials with mist eliminators and rubber-lined stacks to minimize acid attack by the exhaust gases. Figure 3-1 illustrates a typical system of this type. Effluent regulations in Europe are already forcing installations of this type to evaporate liquids and send residue and solids to special waste storage. Newly enacted SO_2 removal requirements and restrictions on liquid wastes are rendering single-stage acid gas wet scrubbers obsolete. Multistage scrubbers with effluent fed to spray dryers upstream are currently considered state-of-the-art in Europe. These are discussed in Chapter 4.

3.2 Post Combustion NO_x Control

3.2.1 Selective Catalytic Reduction (SCR)[11]

For post combustion NO_x control, selective catalytic reduction is the most advanced process, with ammonia reducing NO_x to nitrogen, N_2, and water vapor in the presence of a catalyst. This approach differs from the

LEGEND:

1 Gas-Gas Heat Exchanger
2 Venturi Scrubber
3 Stack
4 Lime Silo
5 Lime Slaker
6 Neutralization Tank

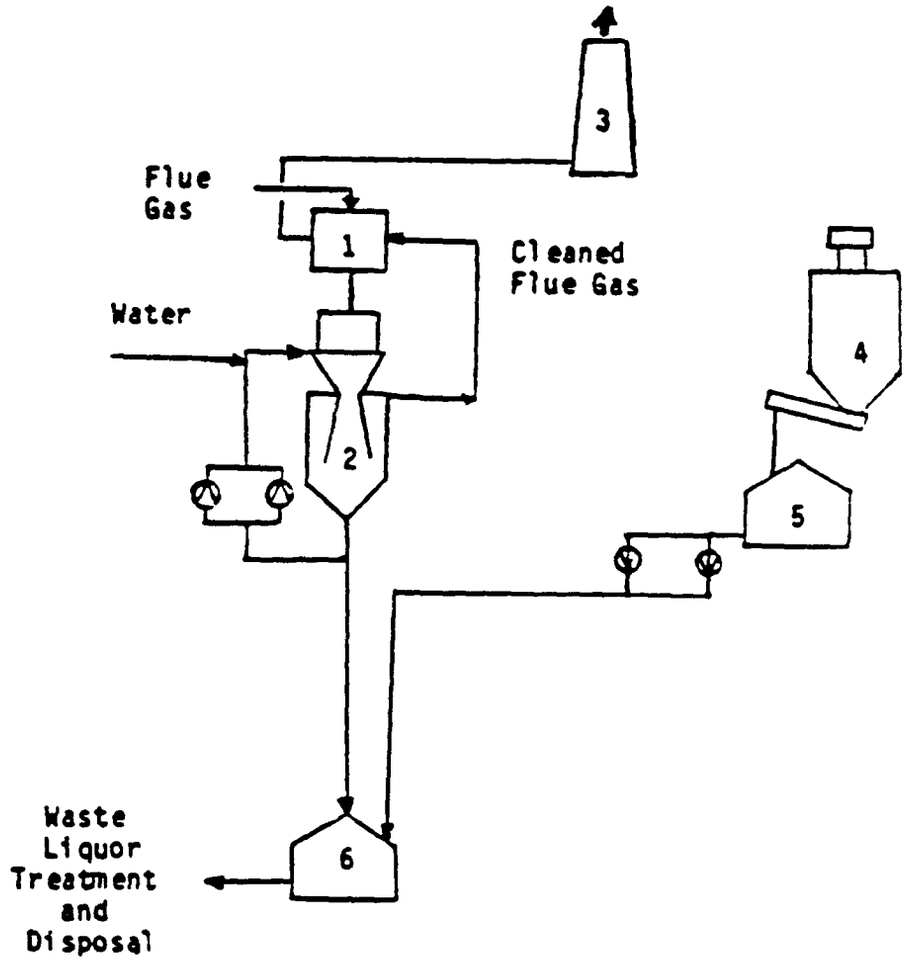

Figure 3-1. Acid gas scrubber.[10]

selective non-catalytic reduction (SNR) process (commonly called Thermal De-NO_x) discussed in the combustion report of this series in several ways:

- o Ammonia is injected into the flue gas at lower temperature [150-400°C (302-752°F)] zones,
- o A catalyst is used to compensate for the lower driving force of reaction and to better utilize ammonia,
- o Higher NO_x removal is possible than for Thermal De-NO_x,
- o SCR can be adversely affected by certain metals and acid gases, and
- o Secondary ammonia emissions are higher with Thermal De-NO_x than with SCR.

Since virtually all of the NO_x in combustion gases is in the form of nitrogen oxide (NO), a small amount of oxygen promotes the reaction as follows:

$$4NO + 4NH_3 + O_2 \longrightarrow 4N_2 + 6H_2O \qquad (3\text{-}1)$$

For typical applications on fossil-fuel-fired boilers, SCR removes 60-85 percent of the NO_x using 0.61-0.90 mole NH_3 per mole NO_x, leaving a few ppm unreacted NH_3 (although monitoring methods for NH_3 are not available to confirm this on a continuous basis). The addition of larger amounts of NH_3 increases NO_x removal but produces larger amounts of unreacted NH_3 (ammonia slip). The optimum temperature for Reaction (3-1) is 300-400°C (572-752°F), so SCR is generally applied to flue gas at the economizer outlet.

Earlier SCR problems such as catalyst poisoning by SO_x, plugging, ammonium bisulfate deposition, production of SO_3, and erosion of catalyst have generally been overcome. However, attack of conventional SCR catalysts (which use base metal with titanium dioxide) by hydrochloric acid is still a major problem. This may be overcome by either (1) development of HCl-resistant catalyst or (2) location of SCR downstream of HCl controls.

Two commercial applications of SCR on municipal incinerators in Japan began operation in late 1986. Both use a special low temperature, acid-resistant catalyst developed by Mitsubishi Heavy Industries (MHI). One, a 150 ton/day plant in Tokyo, is a retrofit application with very limited space for the catalyst. Consequently, the design NO_x removal is only 30-40 percent from flue gas having 120 ppmv NO_x and 500-800 ppmv HCl. The SCR unit is located downstream of an ESP and upstream of a sodium-based wet scrubber.

The other SCR system, also developed by MHI, has been integrated with two new 65 ton/day incinerators in Tokyo and follows the lime spray dryer/baghouse systems. This SCR system will treat a gas stream [$\sim$ 200°C ($\sim$392°F)] containing about 50 ppmv HCl, 50 ppmv SO_x, 30 mg/Nm^3 dust, and 150 ppmv NO_x. The system is designed to remove 73 percent NO_x (40 ppmv at outlet), but the guarantee is only 33 percent NO_x removal or an emission NO_x concentration of 100 ppmv.

SCR is also being applied to sludge incinerators in Japan. At least 15 SCR plants on municipal sludge incinerators have been constructed by MHI. Normally, impurities such as HCl and trace metals degrade SCR catalysts, so the incinerator gas is typically subjected to sodium wet scrubbing and, in some cases, a wet ESP to remove HCl and trace metals to acceptable levels. Then a special titanium-based honeycomb catalyst developed by MHI is used to remove NO_x by 80-90 percent. Flue gas volumes for this application typically range from 2,500 to 108,000 Nm^3/h.

Design data for some sludge incinerator installations are presented in Table 3-1. As shown, uncontrolled NO_x levels of 100-150 ppmv are reduced by 80-90 percent with only 5 ppmv of ammonia slip. Performance data are not available at this time.

TABLE 3-1. SCR PLANT DESIGNS FOR SLUDGE INCINERATOR FLUE GAS[11]

Gas Treated, Nm^3/hr	108,000	40,000	24,000	2,500
SO_2, ppmv	10	50	20	20
NO_x, ppmv	100	150	130	130
Temperature, °C	350	400	400	400
NH_3/NO_x molar ratio	1.0	1.0	1.0	1.0
NO_x removal, %	90	80	90	90
NH_3 slip, ppmv	5	5	5	5

Three SCR options for incinerators are shown in Figure 3-2.[12] Option I shows conventional SCR as practiced in coal-fired utility applications. Option II uses SCR after the metals and acids have been removed, but the catalyst operates in a lower temperature range. Such catalysts are in advanced development in both Europe and Japan, and two commercial applications of low temperature catalysts in Japan were noted above. Option III is one of several possible schemes to utilize current commercially demonstrated technology as discussed earlier. Note that air preheat is replaced by reheat of SCR inlet gas, incurring a substantial energy penalty. Other schemes could use auxiliary reheat, but in no case can bypass reheat be used.

Noteworthy are the temperatures of operation. Depending on the catalyst used, temperatures as low as 200°C (392°F) may be used, and reheat costs are reduced (see Figure 3-2, Option III). Another benefit is that noxious and difficult to scrub gases, such as mercaptans and sulfides, are decomposed by oxidation by about 80 percent.

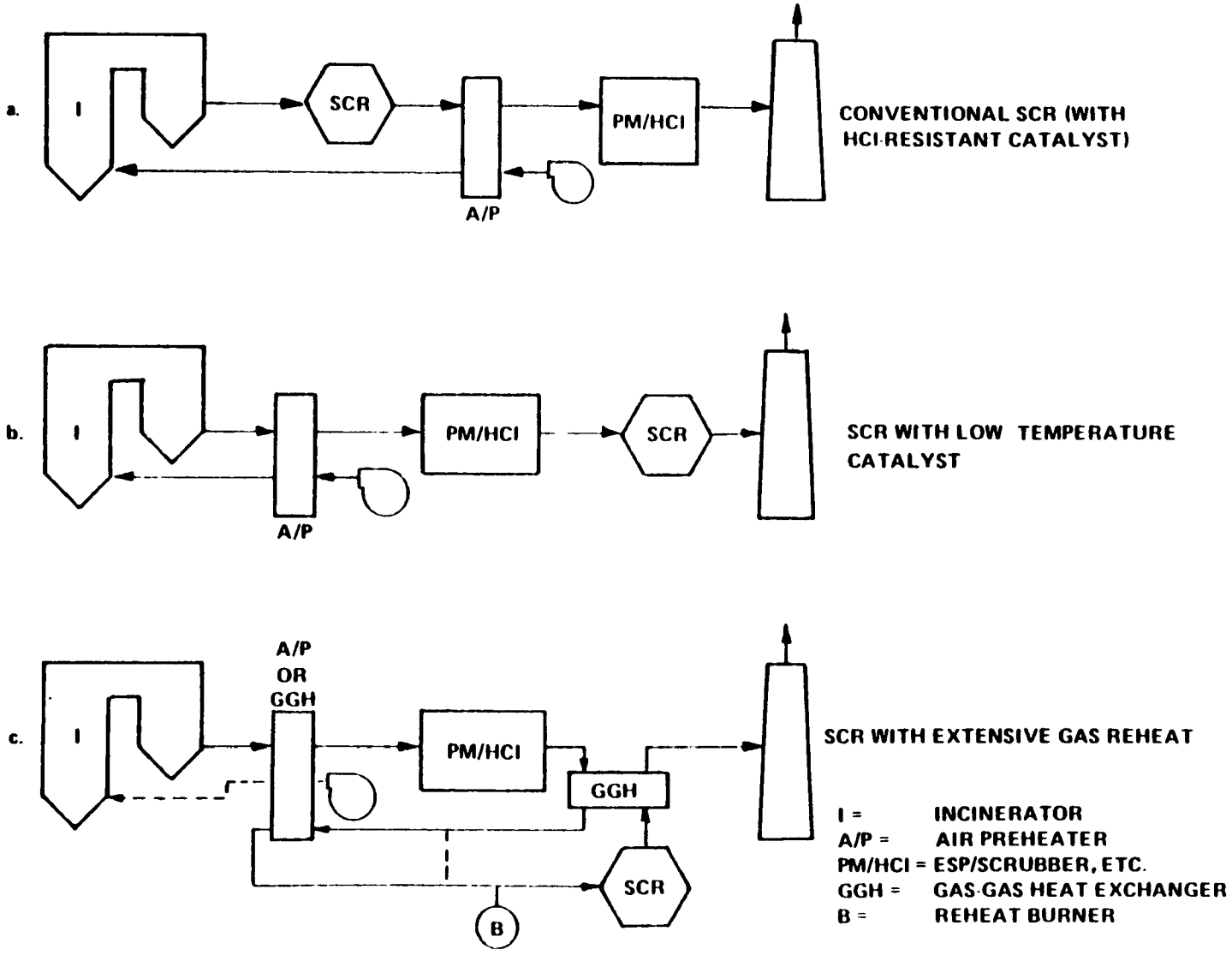

Figure 3-2. SCR options for municipal incinerators.[12]

Although this SCR process is commercially used, improvement efforts focus on two areas: low temperature catalysts (Option II, Figure 3-2) and high temperature catalysts resistant to HCl attack and metals poisoning.

Operation and maintenance techniques to ensure reliable operation include periodic inspection of the catalyst, with the partial replacement of the bed during annual outages. Routine monitoring of NO_x emissions and ammonia slip by grab sampling is necessary to determine the catalyst activity and potential for buildup of ammonium sulfate on internal surfaces downstream. The pressure drop across the catalyst bed should be monitored to determine plugging and/or channeling, both of which result in poor performance.

The gradual loss in catalyst activity is inevitable during SCR operation. If a minimum NO_x removal is mandated, the NH_3/NO_x molar ratio can be gradually increased to compensate for the degradation of the catalyst. This approach entails increased ammonia leakage and potential sulfate buildup downstream. Alternatively, the catalyst may be partially or totally replaced depending on the tradeoffs of ammonia cost, increased maintenance, and lower reliability versus catalyst cost.

3.2.2 Wet NO_x Removal Processes[11]

Wet processes for NO_x removal have several drawbacks: (1) most nitrogen oxides are present as nitric oxide (NO) which is relatively unreactive; (2) NO_2 is relatively soluble but somewhat less reactive than SO_2 or other acid gases; (3) oxidation of NO to NO_2 is difficult; and (4) nitrate and nitrite byproducts have limited use, requiring expensive processing to produce a salable product, such as fertilizer.

The processes which have been used in Japan and are planned in Germany for incinerators include oxidation/reduction and complex absorption. In oxidation/reduction, a strong oxidizing agent such as sodium chlorite or ozone is added to flue gas to convert all NO_x to NO_2 prior to wet scrubbing (usually sodium-based). The complex absorption process uses ethylenediamine tetracetic acid (EDTA) and ferrous ions which promote NO absorption by forming a complex compound.

Another wet NO_x process involves addition of ammonia upstream of a sodium hydroxide spray dryer in Japan. At temperatures of 400 to 500°C (752 to 932°F), ammonia is injected at a molar ratio of 0.35 NH_3/NO_x to get 30 percent NO_x reduction in the spray dryer-ESP system. Sodium sulfite is the only product waste; hence a reduction of NO_x to N_2 is suspected, similar to the SCR reactions. Because the effect of HCl on this process is not known, the applicability of this process to municipal solid waste incineration is uncertain.

Since the above wet NO_x processes involve scrubbing where more reactive species (SO_2, HCl) than NO_x are present in the flue gas, all wet NO_x schemes are essentially multiple pollutant control scrubbers. They are discussed in more detail in Chapter 4.

4.0 MULTIPOLLUTANT CONTROL SYSTEMS

European and Japanese regulations generally require control of gaseous and particulate matter emissions; hence control systems which simultaneously remove several pollutants are commonly used. In addition, a growing number of local and state permitting agencies in the United States recognize the need for multipollutant control and, in essence, require the installation of systems similar to those in Europe. This section will review the various types of multipollutant control systems commercially available today and discuss their performance in controlling pollutants of concern.

4.1 Wet Scrubbing

The use of wet scrubbers for multipollutant control has been practiced since the early 1970s, notably in Europe and Japan. By addition of alkali--sodium or calcium--a particulate scrubber also significantly reduces the level of acid gases--SO_2, HCl and HF--and converts them into an aqueous salt solution or slurry requiring treatment and disposal. More recently wet scrubbers designed for acid gas removal have been augmented by addition of chemicals to enhance NO_x removal as well. These augmentations involve expensive chemicals and increase the volume of scrubber waste.

4.1.1 Wet Scrubbing for Acid Gases (HCl, HF, and SO_2)[10]

Wet scrubbing for acid gases differs markedly from wet scrubbing for particulate matter in several ways: (1) emphasis is on gas/liquid contact and not impingement of particles, (2) chemical additives to the scrubber liquor require careful attention to the system chemistry and accelerate the potential for corrosion and fouling of scrubber internals, and (3) the volume of waste is substantially increased. As a result, significantly more attention is paid to process conditions and effluent/exhaust chemical composition with wet scrubbing for gases.

Many types of wet scrubber are used for removing acid gases--spray towers, centrifugal scrubbers, venturi scrubbers. Scrubbers with internals, such as packed-beds and trays, are less commonly used. Figure 4-1 illustrates a typical wet scrubber installation for gas absorption.

Gas enters the absorber where it is contacted with an alkaline solution. For this discussion lime is used as the reagent. The lime solution reacts with the acid gases to form salts, which are generally insoluble and may be removed by sequential clarifying, thickening, and vacuum filtering. The dewatered salts or sludges are then landfilled.

In coal-fired utility boiler applications, the process features potential closed-loop operation, wherein all water is recycled to the process except for evaporative losses and residual moisture in the solid waste. Further, the suspended solids usually contain mostly calcium sulfite which may be oxidized in an intermediate step by blowing air through the liquor to form calcium sulfate or gypsum which is a potentially salable by-product, as well as a more manageable, drier solid waste.

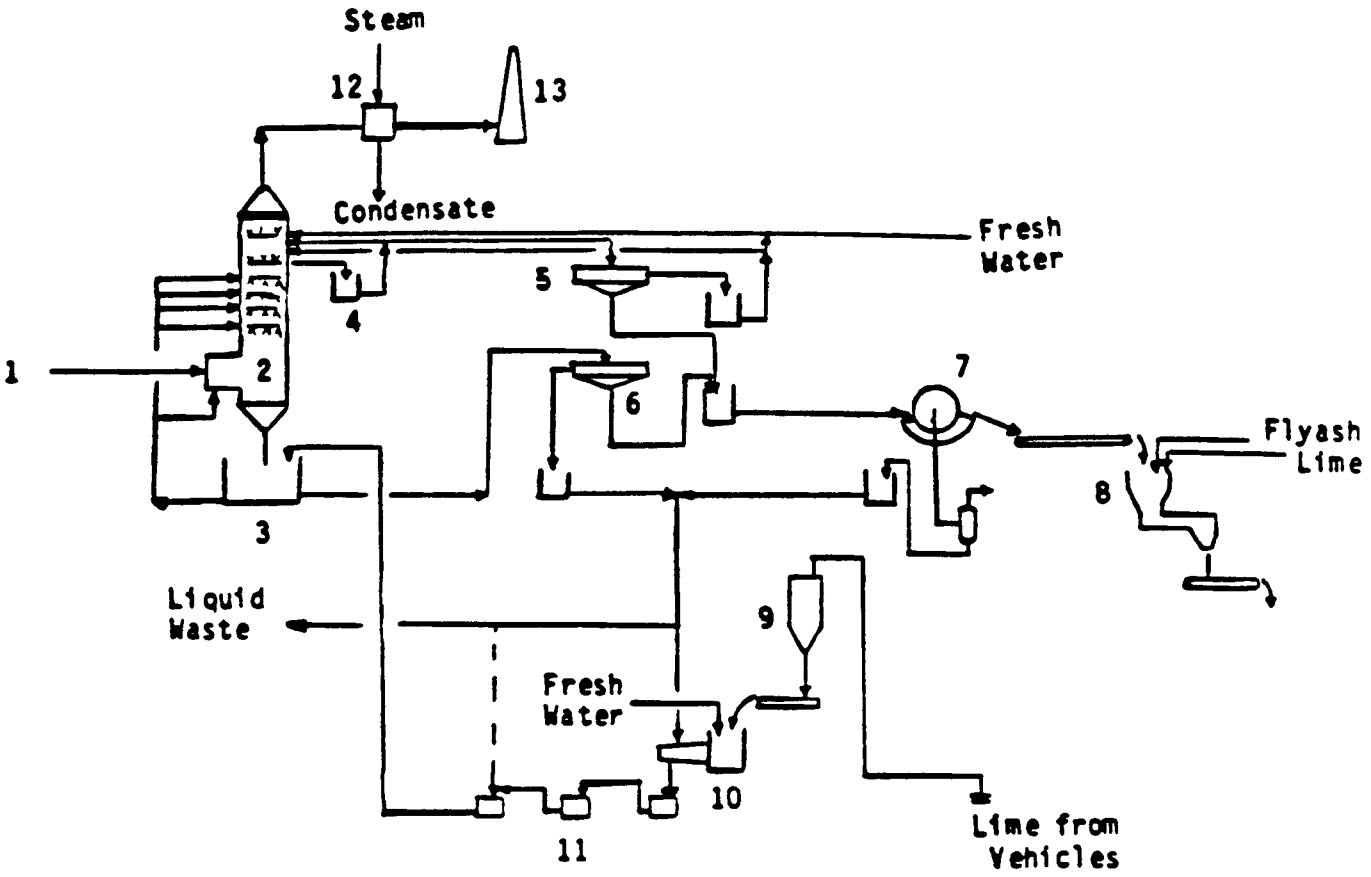

LEGEND:

1 Flue Gas Inlet
2 Absorber
3 Hold Tank
4 Wash Tray Tank
5 Clarifier
6 Thickener
7 Vacuum Filter
8 Pug Mill
9 Lime Storage
10 Lime Slaker
11 Dilution Tank
12 Heat Exchanger
13 Stack

Figure 4-1. Lime scrubbing for acid gas and SO_2 removal.[13]

For incinerator lime scrubbing, the following chemical reactions occur:

$$Ca(OH)_2 + SO_2 \text{ ---> } CaSO_3 \cdot 1/2H_2O + 1/2H_2O \qquad (4\text{-}1)$$

$$CaSO_3 \cdot 1/2H_2O + 1/2O_2 + 3/2H_2O \text{ ---> } CaSO_4 \cdot 2H_2O \qquad (4\text{-}2)$$

$$Ca(OH)_2 + 2HCl \text{ ---> } CaCl_2 \cdot 2H_2O \qquad (4\text{-}3)$$

$$Ca(OH)_2 + 2HF \text{ ---> } CaF_2 \cdot 2H_2O \qquad (4\text{-}4)$$

However, the presence of substantial HCl in incinerator flue gas results in a significant portion of calcium chloride ($CaCl_2$) in waste solids as well as a buildup of chlorides in the liquor such that waste handling and liquor recycle are more difficult. Solids become more difficult to settle and dewater with $CaCl_2$, and generation of a useful waste material such as gypsum is impractical. The buildup of chlorides in liquor necessitates a purge stream to retain good scrubber performance and minimize plugging, scaling, and corrosion. In the case of incinerator flue gas, a single scrubber would operate in essentially an open loop, with large amounts of water consumption, treatment, and waste.

A more practical scheme is to install a prescrubber just upstream of the absorber in Figure 4-1 which operates independently, with a separate liquor loop, primarily as a chloride/fluoride scrubber. In this way the main absorber may act as an SO_2 scrubber (or SO_2/NO_x scrubber in more advanced schemes) and generate more stable waste with liquor recycle. This will be discussed in more detail in Section 4.3 when the hybrid scrubber systems are discussed.

4.1.2 Wet Scrubbing for Acid Gases and NO_x[11]

In more recent advances, NO_x control is possible by either adding a chemical which absorbs nitric oxide (NO), the primary constituent of NO_x, or oxidizes NO to NO_2 (nitrogen dioxide) which is more readily absorbed in scrubber liquor.

In the former case, a dissolved catalyst, ethylenediamine tetraacetic acid (EDTA), is used in a sodium or ammonia solution with ferrous ion. The sulfur oxides present are absorbed by either sodium sulfite or ammonium hydroxide, and these compounds enter into a complex series of reactions that take place after the NO is absorbed. The overall reaction is as follows for ammonia scrubbing:

$$2NO + 5SO_2 + 8NH_3 + 8H_2O \text{ ---> } 5(NH_4)_2SO_4 \qquad (4\text{-}5)$$

Since this process has not been operated on a municipal incinerator application, it is assumed that chlorides and fluorides will be removed in a separate loop to minimize adverse effects. This process is offered by one German vendor, Saarberg-Hoelter-Lurgi, and is scheduled for installation on utility boilers. Little information has been disclosed about process details, but

it is suspected that the EDTA process may well be one of the seven wet NO_x absorption processes recently announced for installation on incinerators in West Germany.[14]

The other wet NO_x absorption technique uses an oxidizing agent such as ozone, chlorine dioxide, or sodium chlorite to oxidize NO to NO_2. Then the NO_2 is scrubbed in a conventional sodium or magnesium scrubber along with other acid gases. The reactions are:

$$NaClO_2 + 2NO \longrightarrow NaCl + 2NO_2 \qquad (4\text{-}6)$$

$$2NaOH + 2NO_2 + 1/2O_2 \longrightarrow 2NaNO_3 + H_2O \qquad (4\text{-}7)$$

If a calcium scrubber is used, a catalyst must be added, and the resulting waste stream requires special treatment to avoid gaseous ammonia evolution from the waste liquor.

These processes are discussed further in Section 4.3.

4.1.3 Performance of Wet Scrubbers[10]

The performance of wet scrubbers is dependent on many factors, and the data base is too limited on incineration applications for detailed discussions of the effects. Theoretically, the reaction of strong acid gases (HCl, HF) proceeds rapidly with alkaline solutions and even mildly acidic solutions. Hence, HCl and HF removal should be high (greater than 90 percent) in every case, assuming proper operation. The reaction of SO_2 proceeds more slowly and over a limited pH range, the limiting factors being the rate of SO_2 absorption and, for calcium systems, the dissolution rate of solid caustic particles. Thus, SO_2 removal may vary greatly over a limited range of operation, depending on pH control, inlet SO_2 concentration, and many other factors discussed under operation and maintenance. Since wet scrubbers operate at saturation [40-50°C (104-122°F) typically], the quenching of flue gas by some 150 to 200°C (302-392°F) should reduce considerably the volatile compounds, including organics and trace metals.

Reported European outlet emissions for a wet scrubber designed for multipollutant control, preceded by an electrostatic precipitator, are shown in Table 4-1.

TABLE 4-1. WET SCRUBBER OUTLET EMISSIONS[10]

HCl	5-10 ppmv
HF	1 ppmv
SO_2	25 ppmv
Particulate Matter	<0.01 gr/dscf
Heavy Metals[a]	<0.001 gr/dscf
Hg	0.00002 gr/dscf

[a]Classes 1-3 of West German regulations. Includes Cd, Tl, Hg, As, Co, Ni, Se, Te, Sb, Pb, kCr, Cu, Mn, V.

It would be expected that volatile organic pollutants would also be removed by wet scrubbers because these pollutants would be condensed to form particulate matter which would be collectible in the scrubber. However, no data are available to test this hypothesis.

4.2 Dry and Semi-Dry* Scrubbing

Because of the difficulty in managing the buildup of chlorides necessitating dual wet scrubbing and the burden of a liquid waste disposal, the most popular flue gas scrubbers are the dry and semi-dry types. Dry scrubbing involves the injection of a solid powder such as lime or sodium bicarbonate into the flue gas where acid gas removal occurs in the duct and continues in the dust collector as sorbent and ash particles and condensed volatile matter are captured. In a semi-dry process, better known as spray drying, the sorbent enters the flue gas as a liquid spray with sufficient moisture to promote rapid absorption of acid gases but yet produces only dry solid particles entering the particle collector.

4.2.1 Dry Injection Processes[10]

Dry injection of alkaline sorbent into circulating flue gas followed by a particle collector has been recently developed in Europe, and more than 20 installations on incinerators are known in Europe and Japan. The best known and studied process of this type is the Malmo, Sweden, installation as shown in Figure 4-2. A cyclone precollector removes a large amount of coarse fly ash prior to the waste heat boilers but does not play a role in the process. Dry calcium hydroxide (hydrated lime) is pneumatically injected into a reactor where the gas rises and mixes with the sorbent. The reactor also provides additional solids residence time to allow reactions to occur. An older electrostatic precipitator removes about 95 percent of the dust, while a newer pulse-jet fabric filter removes the remainder. In a new facility, it is likely that a fabric filter would be used, although several units with ESPs are reported.

One interesting fact about the Malmo installation is the recent attempt to increase acid gas removal. A heat exchanger was installed to lower inlet flue gas from 250°C (482°F) to 160-180°C (320-356°F), and the ESP was downgraded to allow more sorbent to enter the fabric filter. It is well known that fabric filters may remove substantial amounts of acid gas in proportion to the ratio of sorbent on the fabric to the acid gas flow rate. Also, a lower flue gas temperature or higher relative humidity in the flue gas increases acid gas removal.

*A semi-dry scrubber is also known as wet/dry scrubbing and spray drying. It consists of a spray dryer and a dry solids collection device (ESP or fabric filter). In the U.S., dry scrubbing refers to a process in which solids from the process are dry (i.e., the cleaned flue gas is unsaturated with water vapor). Using the U.S. terminology, both a dry sorbent injection plus particulate collection system and a spray dryer plus particulate collection system are dry scrubbers.

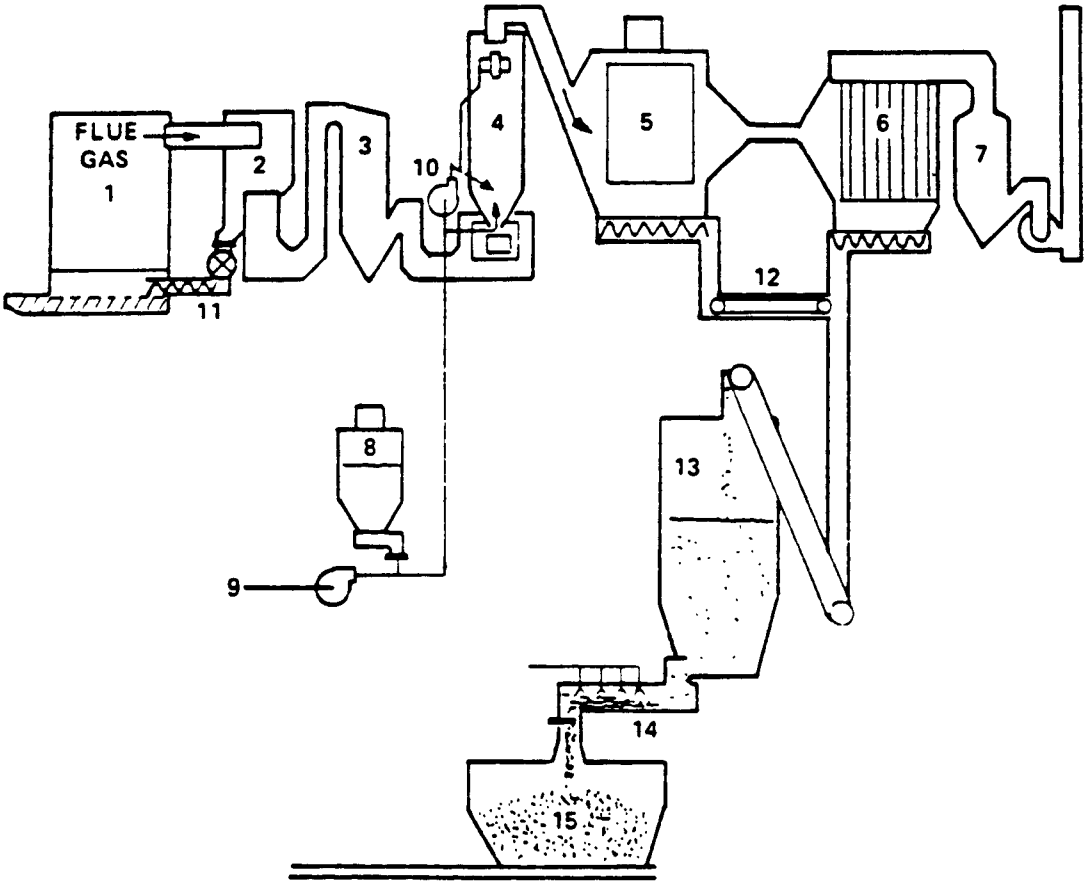

1. FURNACE AND BOILER
2. PRECOLLECTOR
3. WASTE HEAT BOILER NO. 1
4. REACTOR
5. ELECTROSTATIC PRECIPITATOR
6. FABRIC FILTER
7. WASTE HEAT BOILER NO. 2
8. LIME SILO
9. LIME FEEDING
10. LIME RECIRCULATION
11. COARSE DUST CONVEYING
12. FINE DUST CONVEYING
13. DUST SILO
14. DUST HUMIDIFIER
15. DUST BIN

Figure 4-2. Dry absorption system, Malmo, Sweden.[10]

Performance of Dry Injection/Fabric Filter Systems

The following normal control device inlet pollutant concentrations and removal data have been reported at Malmo:[10]

TABLE 4-2. INLET POLLUTANT CONCENTRATION AND POLLUTANT CONTROL WITH A LIME DRY INJECTION PROCESS[11]

Pollutant	Inlet Concentration (mg/Nm^3)	Removal (%)
Particulate Matter	10	Not reported
HCl	200	80
HF	0.2	98
SO_2	150	50
Cd	0.002	99+
Pb	0.04	99+
Zn	0.17	99+
Hg	0.04	90

It should also be noted that dioxin emissions were reported below the detectable limit (0.1 ng/Nm^3), but this is likely due to very efficient combustion efficiency in the incinerators (reported as 99.8 percent). Recent data from Canada on a slipstream pilot plant indicate very high control of pollutants in municipal solid waste flue gas with dry scrubbing (lime injection followed by fabric filtration) for temperatures from 110-140°C (230-284°F) when humidification precedes the scrubber. Effective pollutant control was also obtained with a wet/dry or semi-dry (spray dryer plus fabric filter) system at 140°C (fabric filter inlet temperature with and without recycle from this flue gas cleaning system). Only the mercury and SO_2 removals appear to vary with flue gas temperature. Mercury capture was 90 percent or better at 110-140°C but essentially nil with flue gas at about 200°C (392°F) into the fabric filter. SO_2 capture ranged from 96 percent at 110°C to 29 percent for the 200°C fabric filter inlet temperature. Removal efficiencies for other trace organics (chlorobenzenes, polychlorinated biphenyls, and chlorophenols) were generally 95 percent or higher over the temperature range of 110-140°C. Polycyclic aromatic hydrocarbons removal was about 85 percent over the same temperature range but rose to 98 percent at 200°C, while the removal of the other trace organics fell to the 55-60 percent neighborhood at 200°C. Tables 4-3 through 4-9 summarize the test conditions and results reported by Environment Canada for the Quebec City test program.[15]

A second type of dry injection process is a circulating fluid bed-absorption process shown in Figure 4-3. The process is offered semi-dry for utility applications and totally dry for incinerator applications. A few

TABLE 4-3. SUMMARY OF KEY OPERATING PARAMETERS[15]

	Dry System[a]				Wet/Dry System[a]	
	110°C	125°C	140°C	>200°C	140°C	140°C "Recycle"
Incinerator						
Steam flow, kg/h x 10^3	32.8	33.4	33.2	33.0	32.1	31.3
Gas temperature @ boiler outlet, °C	303	287	291	287	278	293
Fabric Filter						
Pressure drop, cm water gauge	15.7	14.4	14.9	14.7	15.2	15.9
Flow Rate						
Lime, kg/h	3.7	3.6	3.7	3.6	3.5	3.5
Dry Flue Gas						
Inlet, Nm^3/h[b]	3600	3730	3520	3010	3650	3560
Midpoint, Nm^3/h[b]	4400	4430	4120	3650	4180	4110
Outlet, Nm^3/h[b]	4230	4350	4170	3600	4220	4090
Temperature						
Inlet to pilot plant, °C	267	258	261	253	254	263
Inlet to fabric filter, °C	113	125	142	209	140	141
Flue Gas Composition at Outlet to Pilot Plant						
CO_2, %	7.1	7.4	7.5	7.3	8.3	7.5
O_2, %	12.7	12.4	12.5	12.9	11.8	12.5
CO, ppm	140	180	220	160	130	170
THC, ppm	5	4	5	4	4	4
Particulate Loading						
Inlet to pilot plant, mg/Nm^3 @ 8% O_2	7710	7260	6250	5740	5560	7190

[a]Temperatures shown are nominal values at the midpoint (fabric filter inlet) of the pilot plant flue gas cleaning system.
[b]Reference conditions are 25°C and 101.325 kPa.

TABLE 4-4. PCDD CONCENTRATIONS (ng/Nm^3 @ 8% O_2) IN FLUE GAS AND EFFICIENCY OF REMOVAL[15]

	Dry System[a]				Wet/Dry System[a]	
	110°C	125°C	140°C[b]	>200°C	140°C	140°C "Recycle"
Inlet, ng/Nm^3	580	1400	1300	1030	1100	1300
Midpoint, ng/Nm^3	310	570	540	1140	840	1270
Outlet, ng/Nm^3	0.2	ND[c]	ND[c]	6.1	ND[c]	0.4
Efficiency						
Inlet/midpoint, %	47	60	57	(11)	24	2
Overall, %	>99.9	>99.9	>99.9	99.4	>99.9	>99.9

[a]Temperatures shown are nominal values at the midpoint (fabric filter inlet) of the pilot plant flue gas cleaning system.
[b]Based on one test.
[c]ND = Not detected.

TABLE 4.5 PCDF CONCENTRATIONS (ng/Nm^3 @ 8% O_2) IN FLUE GAS AND EFFICIENCY OF REMOVAL[15]

	Dry System[a]				Wet/Dry System[a]	
	110°C	125°C	140°C[b]	>200°C	140°C	140°C "Recycle"
Inlet, ng/Nm^3	300	940	1000	560	660	850
Midpoint, ng/Nm^3	270	440	630	490	690	1030
Outlet, ng/Nm^3	2.3	ND[c]	1.0	1.2	ND[c]	0.9
Efficiency						
Inlet/midpoint, %	11	54	37	13	-4	-21
Overall, %	99.3	>99.9	99.9	99.8	>99.9	99.9

[a]Temperatures shown are nominal values at the midpoint (fabric filter inlet) of the pilot plant flue gas cleaning system.
[b]Based on one test.
[c]ND = Not detected.

TABLE 4-6. PERCENT REMOVAL OF OTHER ORGANICS[15]

	Dry System[a]				Wet/Dry System[a]	
	110°C	125°C	140°C[b]	>200°C	140°C	140°C "Recycle"
Chlorobenzenes	95	98	98	62	>99	99
Polychlorinated biphenyls	72	>99	>99	54	>99	>99
Polycyclic aromatic hydrocarbons	84	82	84	98	>99	79
Chlorophenols	97	99	99	56	99	96

[a]Temperatures shown are nominal values at the midpoint (fabric filter inlet) of the pilot plant flue gas cleaning system.
[b]Based on one test.

TABLE 4-7. INLET/OUTLET METAL CONCENTRATIONS ($\mu g/Nm^3$ @ 8% O_2)[15]

		Dry System[a]				Wet/Dry System[a]	
Metal	Location	110°C[b]	125°C[b]	140°C	>200°C	140°C	140°C "Recycle"
Zinc (Zn)	Inlet	99000	108000	93000	91000	77000	88000
	Outlet	7	5	6	10	5	6
Cadmium (Cd)	Inlet	1300	1300	1500	1000	1200	1100
	Outlet	0.4	0.4	ND[d]	0.6	ND[d]	ND[d]
Lead (Pb)	Inlet	41000	44000	34000	35000	36000	34000
	Outlet	4	3	5	6	1	6
Chromium (Cr)	Inlet	3100	1900	2000	1900	1400	1700
	Outlet	0.4	0.4	1	0.5	0.2	0.7
Nickel (Ni)	Inlet	1000	1800	1300	800	700	2500
	Outlet	1.3	0.4	0.7	2	1.3	2
Arsenic (As)	Inlet	150	100	130	80	110	130
	Outlet	0.02	0.04	0.04	0.07	0.04	0.03
Antimony (Sb)	Inlet	2000	800	1000	1500	1000	2200
	Outlet	0.2	0.4	0.6	[illegible].5	0.3	0.6
Mercury (Hg)	Inlet	440	480	320	450	190	360
	Outlet	40	13	20	610	10	19

[a]Temperatures shown are nominal values at the midpoint (fabric filter inlet of the pilot plant flue gas cleaning system.
[b]Based on one test, except for mercury which is based on two tests.
[c]All concentrations are rounded off for simplicity.
[d]ND = Not detected.

TABLE 4-8. HYDROGEN CHLORIDE CONCENTRATIONS (@ 8% O_2) AND REMOVAL EFFICIENCIES[15]

	Dry System[a]				Wet/Dry System[a]	
	110°C	125°C	140°C	>200°C	140°C	140°C "Recycle"
Stoichiometric Ratio	1.16	1.03	1.04	1.49	1.19	1.10
Inlet, ppm	423[b]	464[c]	475[b,e]	392[c,e]	366[d]	470[b]
Midpoint, ppm	15[b]	69[b]	129[b,e]	196[b,e]	149[b]	152[b]
Outlet, ppm	7[b]	9[b]	29[b,e]	91[c,e]	29[b]	42[b]
Eff. to midpoint, %	96	85	73	50	59	68
Eff. Overall, %	98	98	94	77	92	91

[a]Temperatures shown are nominal values at the midpoint (fabric filter inlet) of the pilot plant flue gas cleaning system.
[b]Based on continuous gas monitors.
[c]Based on manual sampling (15-30 minute tests).
[d]Based on a combination of continuous gas monitors and manual sampling (15-30 minute tests).
[e]One test only.

TABLE 4-9. SULFUR DIOXIDE CONCENTRATIONS (@ 8% O_2) AND REMOVAL EFFICIENCIES[15]

	Dry System[a]				Wet/Dry System[a]	
	110°C	125°C	140°C[b]	>200°C	140°C	140°C "Recycle"
Stoichiometric Ratio	1.16	1.03	1.04	1.49	1.19	1.10
Inlet, ppm	119	118	99	117	106	106
Midpoint, ppm	24	65	64	103	67	70
Outlet, ppm	4	10	41	83	35	43
Eff. to midpoint, %	80	45	35	11	37	35
Eff. Overall, %	96	92	58	29	67	60

[a]Temperatures shown are nominal values at the midpoint (fabric filter inlet) of the pilot plant flue gas cleaning system.
[b]Based on one test.

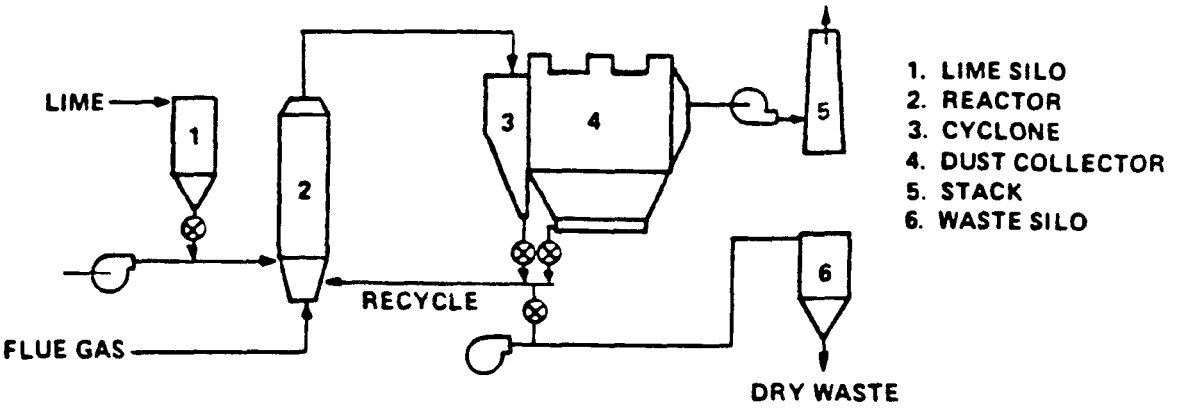

Figure 4.3 Circulating fluid bed absorption (dry) process.[10]

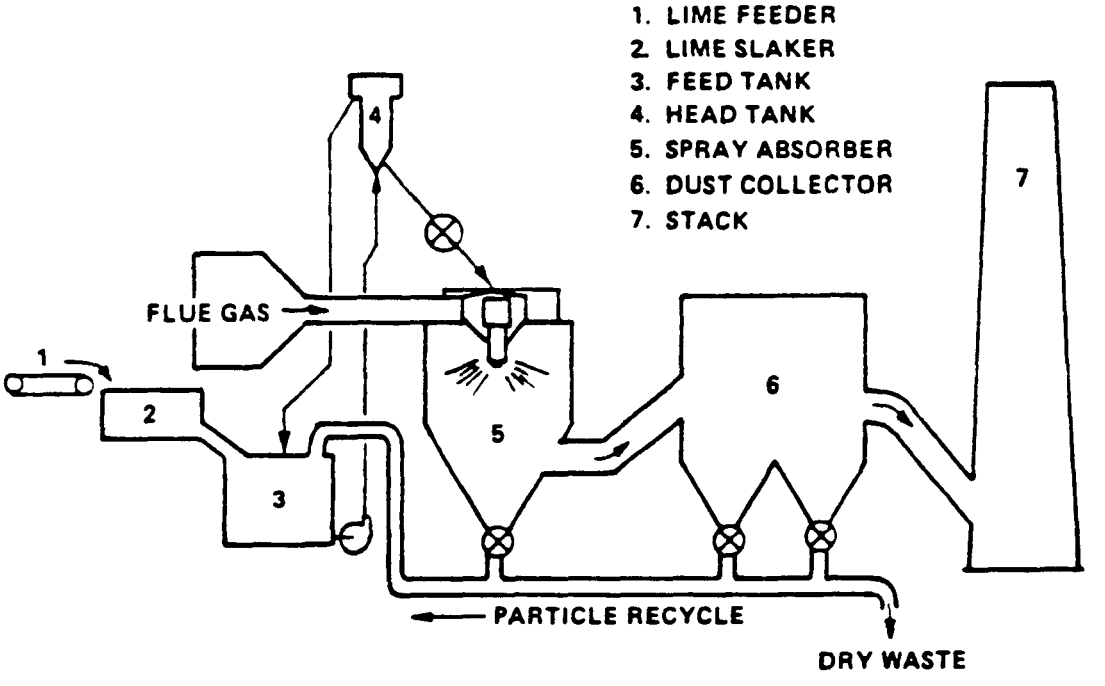

Figure 4-4. Spray absorption (semi-dry) process.[10]

installations on incinerators are currently in operation in Western Europe, but the process has some significant advantages for an ESP retrofit application discussed in the following paragraphs.

Flue gas enters the vertical reactor equipped with a venturi-type gas disperser, where gas velocity is reduced and dry lime introduced. The reactor forms a fluidized layer of fly ash and sorbent reacting with acid gases. Eventually all dry solids are entrained and enter the dust separator just upstream of the electrostatic precipitator. A substantial portion of this collected product is reintroduced into the fluid bed.

Important features of this process are high gas/solid mass transfer rates and recycle which improves the normally low sorbent utilization of dry injection processes. Also, reactors and precollectors are small volume vessels compared to wet and semi-dry process vessels. The important control parameter is the pressure drop across the entrained bed, which is maintained at around 20 mbar by controlling the recycle solids. Recycle product is mechanically conveyed to the venturi section and fed by gravity to the system. The fresh reagent rate is controlled by stack gas monitors.

It should be mentioned that the circulating fluid bed has found only limited use for incinerator applications, primarily because emissions of heavy metals cannot be adequately controlled to meet many European requirements. Addition of moisture to the flue gas, which could condense heavy metals, enlarges the fluid bed considerably, making spray drying more attractive for new sources. It is also possible that high $CaCl_2$ concentrations may complicate the bed dynamics considerably.

As a retrofit process for ESPs, this system has several desirable features including:

- o Substantial acid gas removal upstream of the ESP,
- o Simple operation of small vessels,
- o No wet solids handling, and
- o Better utilization of sorbent than simple dry injection.

Typical outlet emissions data[10] for the variables studied are as follows:

HCl	75 mg/m^3 (90% removal)
HF	0.06-0.13 mg/m^3 (98-99% removal)
Cd	0.3 mg/m^3

4.2.2 Semi-Dry Scrubbing [10]

Semi-dry scrubbing is also called spray dryer scrubbing, dry scrubbing (a misleading title), or wet/dry scrubbing. In this process,the sorbent is injected as a liquid or liquid slurry and the product collected as a dry solid. For the purposes of this discussion, it will be referred to as semi-dry scrubbing to differentiate among true dry scrubbing (dry sorbent injection plus dust collection) and true wet scrubbing.

Semi-dry scrubbing has many variations: sorbent may be injected through liquid nozzles or rotary atomizers, the sorbent may be screw-fed or pneumatically blown in dry and rewetted by water-only nozzles, or it may be injected wet or dry into a fluidized bed with overhead water sprays. The ensuing discussion will focus upon one of these systems--the spray dryer absorber--because it is the most common and successful.

Figure 4-4 illustrates a typical spray drying process for incinerator applications. Lime is slaked, mixed with water, and then pumped as a slurry to a head tank, an option for spray drying. Depending on the inlet concentration of pollutants, slurry is metered into the spray absorber (shown with a rotary atomizer in Figure 4-4). Flue gas heat is sufficient to dry the slurry into a solid powder within the reactor vessel, and part of the solids are collected in the bottom of the absorber vessel while the remainder are collected in the particle collector. Recycle of solids back to the feed tank may be selected as an option if sorbent utilization is very low or higher removals of gaseous pollutants are desired.

The control of this process is relatively simple for incinerator applications. The spray dryer outlet flue gas is controlled at temperatures well above its saturation value. This precludes any sorbent from contacting downstream surfaces as a wet powder leading to solids buildup. It also assures operation well above the dew points of any acid gases. Because of the presence of calcium chloride (a very hygroscopic, difficult-to-dry solid), temperatures are typically controlled at 110°-160°C (230-320°F) by limiting the amount of water injected. In view of the Environment Canada data[15], it appears important that fine atomization of the feed slurry and good gas/slurry droplet mixing be attained to achieve reliable spray dryer operation at a temperature below 140°C (284°F).

A second control loop is usually provided based on the pollutant emission levels in stack gases to regulate the addition of reagent to the system. Therefore with liquid and solids regulated by separate control loops, the solids composition of the slurry may vary somewhat. It is typically low (~ 10 percent) for incinerator applications and easily managec In many cases, the sorbent rate is fixed at a conservatively high rate to ensure low stack emissions, but waste disposal plus sorbent operating costs are increased.

Many additional details of operation of spray drying are given in References 10, 16, and 17. Compared with other systems, considerable emissions testing has been performed on both pilot- and full-scale spray dryer installations. Outlet emission guarantees for spray dryer plus fabric filters and spray dryer plus ESP are as follows:[10]

TABLE 4-10. OUTLET EMISSION GUARANTEES FOR MUNICIPAL WASTE COMBUSTORS[10]

FGC System	Spray Dryer + Fabric Filter		Spray Dryer + ESP	
Flue Gas Component	Concentration	Removal,%	Concentration	Removal,%
HCl	20-60 ppmv	88-99	20-60 ppmv	90-98
HF	2-5 ppmv	50-80	2-5 ppmv	50-80
SO_2	20-70 ppmv	67-90	50-175 ppmv	15-50
Particulate	0.013-0.02 gr/scf		0.015-0.04 gr/scf	

From these guarantees, performance data seem similar for either application except for SO_2 and particulate. Results from these installations at 130-140°C (266-284°F) flue gas outlet temperatures show these similarities. However, when the heavy metal and dioxin/furan removals were examined at the pilot plant level, dramatic differences were noted.

First, actual removal of acid gases and particles has substantially exceeded guaranteed levels as shown in a typical case using a fabric filter at 140°C (284°F):

TABLE 4-11. ACID GAS EMISSIONS FROM MUNICIPAL WASTE COMBUSTOR[10]

Acid Gas	Guarantee, mg/Nm^3	Actual Emissions, mg/Nm^3
HCl	35	12-35
HF	5	0.2
SO_2	70	20-70

On a pilot plant, the following heavy metal removals were observed for ESP and fabric filter applications at the same flue gas conditions:

TABLE 4-12. TRACE HEAVY METALS CONTROL BY PILOT PLANT FGC SYSTEMS[10]

	Spray Dryer + ESP, %	Spray Dryer + Fabric Filter, %
Hg[a]	35-40	75-85
Pb	65-75	95-98
Cd	95-97	95-97
As	93-98	95-98
Particulate	99.2-99.4	99.8-99.9

[a]Vapor only.

Further, when dioxins and furans were measured in the pilot plant, from 48-89 percent of the dioxins and 64-85 percent of the furans were controlled by the spray dryer plus ESP. However, a spray dryer plus fabric filter improved removal in every case, usually by a substantial margin. In fact at 110°C (230°F), over 99 percent control of both dioxins and furans was observed out of the fabric filter.

Recent Canadian data[15] (see Tables 4-3 through 4-9) on a slipstream pilot plant show high pollutant capture for a lime spray dryer/fabric filter. The removal of dioxins/furans approached 100 percent for a fabric filter inlet gas temperature of 140°C (284°F). SO_2 and HCl removals were 60 and over 90 percent, respectively. Metals recovery was over 99 percent except for mercury which was about 95 percent at 140°C. The overall removal efficiencies for other trace organics in the MWC flue gas (chlorobenzenes, chlorophenols, polychlorinated biphenyls, and polycyclic aromatic hydrocarbons) were 99 percent or more at 140°C without recycle. With product recycle, the removal of polycyclic hydrocarbons and chlorophenols fell to 79 and 96 percent, respectively. The control efficiencies need to be verified on full-scale operating facilities.

Tests at the Marion County, OR, MWC facility in 1986 were made to determine compliance with permit conditions. Results for units (boilers) 1 and 2 are shown in Table 4-13, and the discharge permit emission limits are shown in Table 4-14 so that a comparison of test results with the discharge permit emissions may be made.[18] Each unit has a rated capacity of 275 tons/day (tpd) and is equipped with a semi-dry/dry scrubber/fabric filter system (see Figure 4-5). Lime slurry is fed to the quench reactor (spray dryer) and a cement kiln dust is supplied to the dry reactor (venturi) just upstream of of the fabric filter. Annual compliance tests for the Oregon Department of Environmental Quality are also slated at this facility in June 1987.

Comparison of values in the preceding tables show that NO_x emissions from the Marion County facility were about 15% higher than that specified in its discharge permit. All of the other test results showed values lower than the permit limits.

4.3 Combination Scrubbers

Several innovative processes have been recently developed specifically for incinerator applications which utilize combinations of existing scrubber technology. These include a dry/semi-dry process and wet/dry processes.

4.3.1 Semi-Dry/Dry Scrubbing[19]

Figure 4-5 depicts the semi-dry/dry scrubbing process which has been commercially operated in Japan and is currently installed on three U. S. facilities. The process is relatively simple, consisting of a quench reactor, dry venturi reactor, and baghouse. The quench reactor is essentially an upflow spray dryer with multiple sprays of lime slurry used to ensure reliability. An upflow system is claimed to ensure against large droplets (due to sprayer malfunction) impinging on downstream surfaces.

The quenched gas then enters a venturi reactor where a dry powder of calcium silicate/lime composition is introduced. This addition reportedly increases the particle size of fly ash and sorbent such that the baghouse pressure loss (and hence need for bag cleaning) is minimized. This also results in the lime and calcium silicate sorbents being retained on the filters for very long times, reportedly up to eight hours.

With the combination of a more reactive sorbent (calcium silicate) and very long retention time in the gas stream, high removals of acid gases would be expected. Reported data[19] for a commercial system are summarized below:

TABLE 4.13. POLLUTANT EMISSIONS AND CONTROL BY SEMI-DRY/DRY SCRUBBING[19]

Pollutant	Emission Concentration	Removal, %
Particulate	0.0004-0.039 gr/dscf or 1-9 mg/Nm^3	98.7 - 99.1
HCl	1-4 ppmv	95 (average)
SO_2	0-5 ppmv	
Hg	85 g/Nm^3	

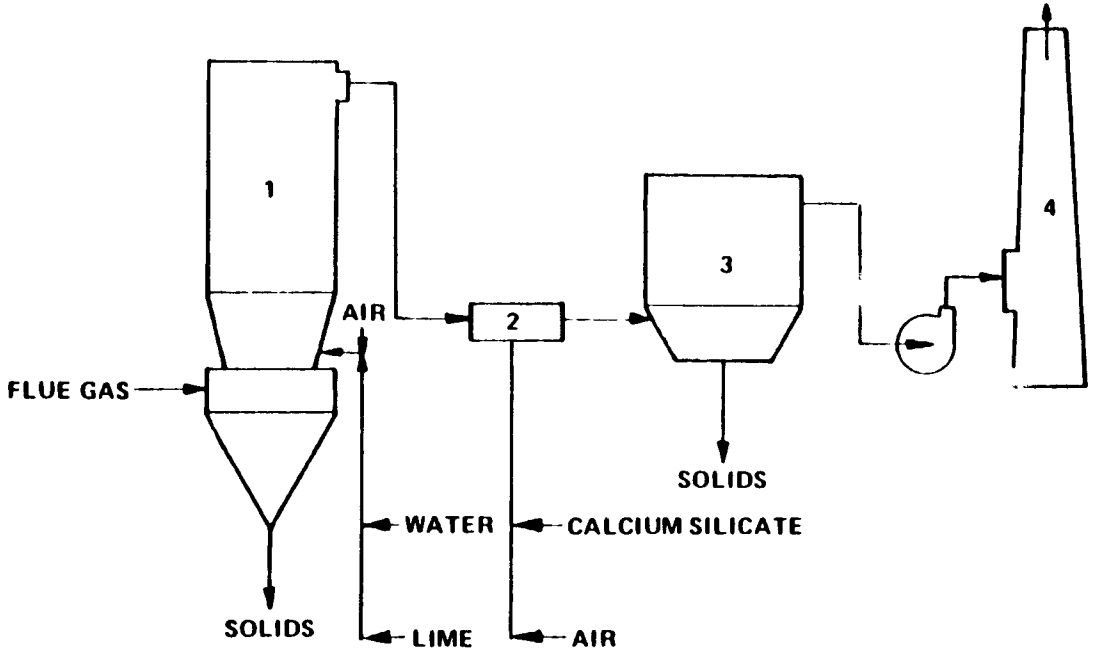

1. QUENCH REACTOR (SPRAY DRYER)
2. DRY VENTURI
3. BAGHOUSE
4. STACK

Figure 4-5. Semi-dry/dry scrubber.[19]

TABLE 4-14. SUMMARY OF EMISSION RESULTS FOR TESTS OF SEPTEMBER - OCTOBER 1986 AT THE MARION COUNTY, OR, WASTE-TO-ENERGY FACILITY[18]

Pollutant	Flue Gas from Boiler 1		Flue Gas from Boiler 2		Flue Gas in Main Stack			
	Avg lb/hr	Max lb/hr	Avg lb/hr	Max lb/hr	Avg lb/hr	@91.5%[a] tpy	Max lb/hr	@100%[a] tpy
NO_x	60.1	69.0	48.4	53.2	108.5	435	122.2	535
SO_2	10.3	12.8	10.6	17.9	20.9	83.8	30.7	134
CO	1.9	2.0	2.2	2.6	4.1	16	4.6	20
TSP	3.7	4.7	0.8	1.2	4.5	18	5.9	25.8
Pb normal	0.003	---	---	---	0.006	0.02	---	---
Pb bypass[b]	---	0.02	---	---	---	---	0.04	0.2
Be	2.4×10^{-7}	2.7×10^{-7}	$<2.0 \times 10^{-7}$	---	$<4.4 \times 10^{-7}$	$<1.8 \times 10^{-6}$	5.4×10^{-7}	2.4×10^{-6}
TCDD	1.9×10^{-8}	2.3×10^{-8}	---	---	3.8×10^{-8}	1.5×10^{-7}	4.5×10^{-8}	2.0×10^{-7}
VOC	0.2	0.2	0.1	0.2	0.3	1.2	0.4	1.8
Fluorides	0.046	0.071	---	---	0.092	0.37	0.14	0.61
Hg	0.026	---	0.034	---	0.060	0.24	0.068	0.30
HCl	0.61	0.73	2.7	2.9	3.3	13	3.6	16
Corrected TSP gr/dscf @ 12% CO_2	0.016	0.021	0.004	0.006				
Other Requirement	Visible Emissions		0%					

[a]Facility availability.
[b]Data based on one test of 5 minutes duration during which the baghouse was bypassed.

TABLE 4-15. PERMITTED EMISSIONS FROM THE MARION COUNTY, OR, WASTE-TO-ENERGY FACILITY[18]

Pollutant	Flue Gas from Boiler 1 (lb/hr)	Flue Gas from Boiler 2 (lb/hr)	Emission Limits Main Stack for Flue Gas from Both Boilers (lb/hr)	(gr/dscf) at 12% CO_2)	(tpy)
NO_x	47.0	47.0	94.0		290
SO_2	36.5	36.5	73.0		220
CO	27.5	27.5	55.0		170
TSP	10.0	10.0	20.0	0.030	61
Pb	00.26	00.26	00.52		1.6
Be	1.45×10^{-6}	1.45×10^{-6}	2.9×10^{-6}		8.8×10^{16}
TCDD	8.5×10^{-7}	8.5×10^{-7}	1.7×10^{-6}		5.1×10^{16}
VOC	1.65	1.65	3.1		9.6
Fluorides	0.8	0.8	1.6		4.8
Hg	0.085	0.085	0.17		0.51
HCl	< 11.5	< 11.5	< 23		< 69

Other Requirement

Opacity	Visible Emissions	10%

Design conditions for this system are typically 90 percent HCl removal, 80 percent SO_2 removal, and 0.008 gr/dscf particulate matter emission.

4.3.2 Semi-Dry/Wet Scrubbing[10]

A flow sheet of this process is shown in Figure 4-6. As discussed earlier, a wet scrubber system designed for multipollutant control will likely require separate treatment for HCl and SO_2 if high removals of both are desired and liquid wastes are to be minimized. The primary feature of this process is separate scrubbing for HCl and SO_2, and the significant innovation is location of an upstream spray dryer which disposes of liquid effluent from both wet scrubbers.

Flue gas enters a spray chamber in which spent scrubber liquor is introduced through a series of nozzles, or a rotary atomizer. The reported retention time for gases is 4-5 seconds. Gas then enters a particulate collector (usually an ESP, but it is not clear that a fabric filter would not work as well) and then to the two-stage wet scrubbing system. The first stage is essentially an HCl scrubber (described in Section 3.1) operated with water injection in a venturi column at a pH of between 0 and 1. Water injection is controlled by monitoring the solution conductivity, and the blowdown stream is neutralized with lime externally.

A second option is to raise the pH to 3-4 and inject a sodium chlorite ($NaClO_2$) solution, which results in oxidation of nitric oxide (NO) to nitrogen dioxide (NO_2), described in Section 3.2.2.

The second stage scrubber, also a venturi, is operated at a higher pH (5-6) with sodium hydroxide for SO_2 removal (and NO_x removal if required). Both stages are designed to intentionally minimize internal surfaces to avoid scaling and erosion. Blowdown from the second stage is sent to a sludge holding tank prior to being sent back to the spray dryer.

No plant is currently known to be operating with this system. However, several plants were in the design or construction stage at the end of 1986 and incorporate all features, including NO_x removal in the wet scrubbers. Since no data for this system are available, the performance is assumed to be at least equivalent to that described for two-stage wet scrubbing:[10]

TABLE 4-16. EXPECTED POLLUTANT EMISSIONS FROM MWC EQUIPPED WITH SEMI-DRY/WET SCRUBBING[10]

Pollutant	Emissions Concentration
HCl	10 mg/Nm^3 (8 ppmv)
SO_2	50 mg/Nm^3 (25 ppmv)
HF	0.5 mg/Nm^3 (0.78 ppmv)
Particulate	10 mg/Nm^3 (0.0057 gr/dscf)
Heavy Metals (group 1-3)	1 mg/Nm^3 (0.00057 gr/dscf)
Hg (vapor)	0.5 mg/Nm^3 (0.000028 gr/dscf)

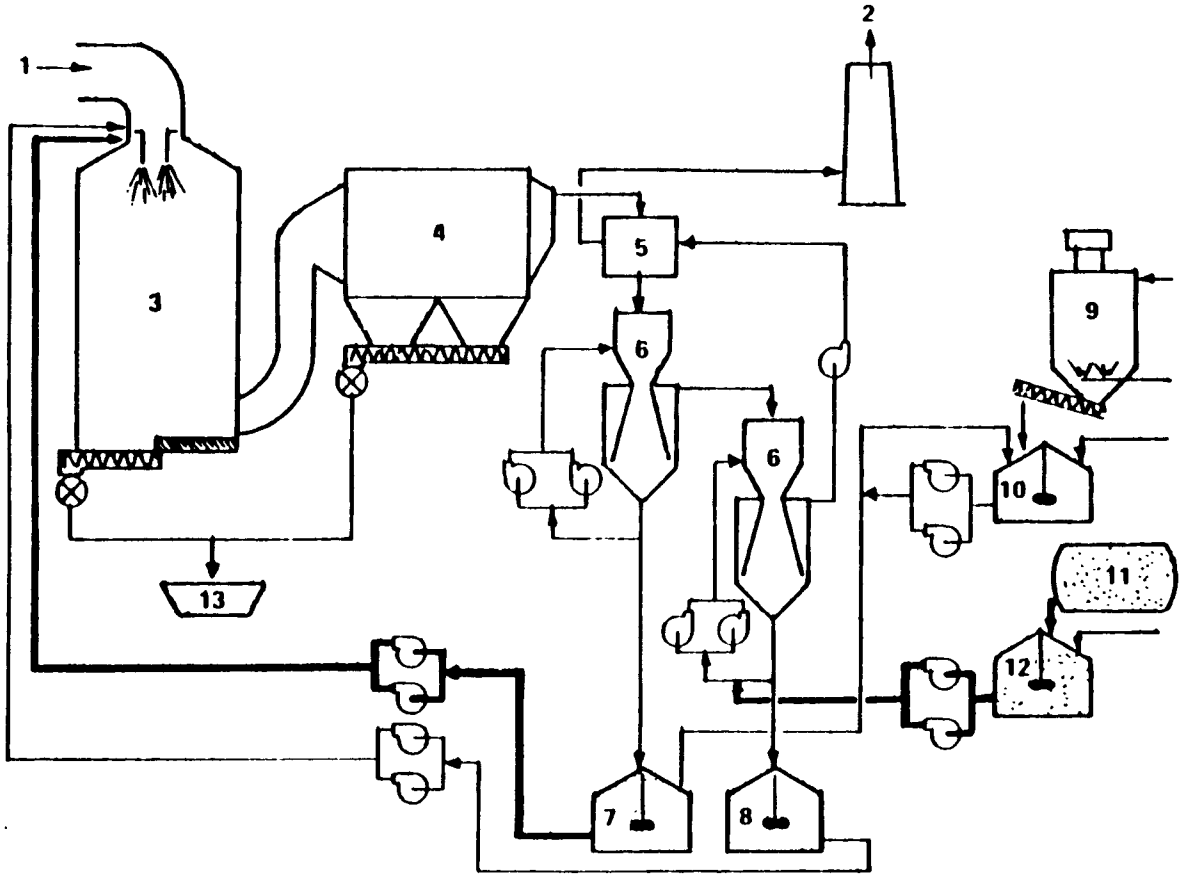

1. FLUE GAS
2. EXHAUST GAS
3. SPRAY DRYER
4. ELECTROSTATIC PRECIPITATOR OR FABRIC FILTER
5. GAS GAS HEAT EXCHANGER
6. VENTURI SCRUBBER
7. NEUTRALIZATION TANK
8. SLUDGE TANK
9. LIME SILO
10. LIME SLAKER
11. SODIUM HYDROXIDE STORAGE
12. SODIUM AIR TANK
13. DRY WASTE

Figure 4-6. Semi-dry/wet scrubber.[10]

As discussed in Section 3.2.2, NO_x removal by oxidation/absorption has been practiced in Japan with 30-90 percent NO_x removal when sodium or magnesium is the second stage scrubber reagent. These systems use chlorine dioxide, ClO_2, rather than $NaClO_2$, however.

The mixing of streams containing chlorides, fluorides, sulfites, sulfates and perhaps nitrates appears to be a complicating factor. Problems relating to corrosion are dealt with by using Hastelloy steel and rubber linings in critical scrubber components. However, when the mixed streams are handled, co-precipitation (scale) due to saturation must be addressed. Also, the amount of water to be spray dried is limited by the evaporative capacity of the flue gas and the minimum approach to saturation desired. Thus, waste liquor must necessarily be very concentrated with respect to dissolved and suspended solids.

5.0 EFFECTIVENESS OF FLUE GAS CLEANING METHODS

5.1 Particulate Matter Control

Particulate matter control for incinerator flue gas applications is a simple matter of choice of control device and proper operation of that device. Wet scrubbers are relatively ineffective for particle control, removing 80 to 95 percent at normal operating ranges. Very high pressure losses are required to remove fine particles, and the erosion and corrosion potential in acidic gas streams makes this a poor choice from economic and reliability standpoints.

Electrostatic precipitators are the most widely used and are the most versatile control systems. Very low emission levels are achievable (<0.02 gr/dscf) at high ratios of collector plate surface area to gas flow volume in the range of 500 min./ft or greater. Fabric filters are seldom used without upstream sorbent injection due to a potential for fires and/or blinding by sticky particles. However, fabric filters are also capable of control to less than 0.02 gr/dscf and are less sensitive to operational upsets that disrupt ESP performance.

5.2 Acid Gas Control

Control of acid gases (HCl, HF, and SO_2) requires scrubbing or devices for gas/liquid or gas/solid contact. Water alone is a reasonably effective sorbent for very reactive acid gases such as HCl and HF, but an alkali sorbent (or control of liquid pH to the 5 or greater range) is necessary for substantial SO_2 control. Totally dry sorbents require substantial residence time in the gas for effective acid gas control. Injection of sorbent into a duct must be complemented by either a fluid bed reactor, humidification, a fabric filter dust collector, or combinations of these to be effective.

Spray drying or semi-dry injection of sorbent is more effective than dry injection, with increasing acid gas control as the approach to saturation temperature is decreased, either by waste heat recovery or water injection/humidification. The most effective control of acid gases is by alkali scrubbers operating at saturation, or wet scrubbing, but this has to be weighed against the amounts of waste water generated.

Pilot plant Canadian data show dry lime injection to be effective for removing over 90% of the inlet HCl for a fabric filter inlet temperature of 140°C (284°F) or less. In the same plant, the SO_2 removal was over 90% for 125°C (257°F), but only 58% at the 140°C filter inlet temperature. The stoichiometric ratio was about 1.1 (based on both HCl and SO_2) in these tests.

Combination dry, semi-dry scrubbers control acid gases perhaps more effectively than once-through spray drying and are probably similar in effectiveness to spray drying with recycle, depending on approach to saturation

TABLE 5-1. EFFECTIVENESS OF ACID GAS CONTROLS (% REMOVAL)

Control System	Pollutant		
	HCl	HF	SO_2
Dry Injection + Fabric Filter[a]	80	98	50
Dry Injection + Fluid Bed Reactor/ESP[b]	90	99	60
Spray Dryer-ESP	95+	99	50-70
(Recycle)[c]	(95+)	(99)	(70-90)
Spray Dryer-Fabric Filter	95+	99	70-90
(Recycle)[c]	(95+)	(99)	(80-95)
Dry/Spray Dryer[d]	95+	99	90+
Wet Scrubber[e]	95+	99	90+
Wet/Dry Scrubber[e]	95+	99	90+

a T = 160-180°C (320-356°F)
b T = 230°C (446°F)
c T = 140-160°C (284-320°F)
d T = 200°C (392°F)
e T = 40-50°C (104-122°F)

T is the temperature at the exit of the control device.

temperature. Combination wet-dry systems are the potentially most effective system for acid gas control but are increasingly complex as the number of pollutants targeted increase. Table 5-1 summarizes the above discussion. The reader is cautioned that the reagent requirements and solid/liquid wastes are not factored in, and this table only reflects systems as operated. Any of these techniques may be enhanced by more reactive sorbents or operation at more favorable temperatures.

In summary, effective acid gas control is possible with dry, semi-dry, and wet scrubbers. HCl and HF are relatively easy to control, while SO_2 control is more difficult and is favored by wet or semi-dry systems with lower flue gas temperatures. Although not discussed due to lack of data, very effective sulfur trioxide control was reported on a spray dryer pilot plant. Should SO_3 control also become a concern, systems which contact the gas with wet or dry sorbent prior to a particulate control device should be encouraged, since after scrubbing, SO_3 apparently becomes an aerosol and is amenable to capture. Control systems with particle collectors upstream of the scrubber have historically reported poor SO_3 control effectiveness.

5.3 Post Combustion NO_x Control

Probably the most difficult and expensive pollutant to control is NO_x, primarily due to the unreactivity of NO which is 95 percent or more of the total uncontrolled NO_x. The most effective control is selective catalytic reduction (SCR) which currently must be preceded by acid gas and heavy metals control to be effective. (However, a low temperature, acid-resistant catalyst has recently been applied to three small municipal incinerators in Japan, but performance data are not yet available.) If the thermal penalties are acceptable, then SCR can remove 80-90 percent of NO_x with a NH_3/NO molar ratio of 1.0 and about 5 ppmv NH_3 slip. Use of special lower temperature, HCl-resistant catalysts in the future can make SCR more attractive. Potentially less effective and more complicated NO_x control may be achieved by an oxidation step integrated into sodium- or magnesium-based wet scrubbing. Due to the liquid waste potential, this may be best applied to the combination wet-dry scrubber system described in Section 4.3.2. Using SCR, a NO_x control of 30 to 50 percent would be expected.

5.4 Post Combustion Organic Pollutant Control

Control of dioxins and furans, as well as other trace organic compounds, is not well understood because the mechanism of capture is not known. Likely, condensation and capture as a particle is significant, and attack and capture by caustic reagents is also probable. These capture phenomena are best addressed by lowering flue gas temperatures, subjecting the VOCs in the flue gas to caustic sorbent, and collecting the product on a highly efficient particle collector. Limited data (mostly for pilot plants) show that spray drying followed by fabric filtration is very effective for VOC control and superior to spray dryer/ESP control. Also lower flue gas temperatures favor increased VOC control. Reference 13 is a good discussion of

these observations. The results are summarized in Table 5-2, where CDD refers to chlorinated dibenzo-paradioxins and CDF to chlorinated dibenzofurans.

TABLE 5-2. SPRAY DRYER CONTROL OF SELECTED ORGANIC POLLUTANTS[17]

	Control System (% Removal)		
Compound	SD + ESP	SD + FF @ High Temp.	SD + FF @ Low Temp.
Dioxins:			
tetra CDD	48	<52	>97
penta CDD	51	75	>99.6
hexa CDD	73	93	>99.5
hepta CDD	83	82	>99.6
octa CDD	89	NA	>99.8
Furans:			
tetra CDF	65	98	>99.4
penta CDF	64	88	>99.6
hexa CDF	82	86	>99.7
hepta CDF	83	92	>99.8
octa CDF	85	NA	>99.8

Reference 7 notes that only limited data have been collected on control device efficiencies for dioxins and furans, with only outlet concentrations being reported for most tests. Unfortunately, test data and methodologies are lacking to compare the effectiveness of various control systems on organic pollutants. However, the superiority of a sorbent on a fabric filter for control is evident from Table 5-2. The data shown were based on tests in a single pilot plant, and thus should be used with caution.

The results of Canadian tests, based on an incinerator flue gas slipstream and the use of dry lime injection (110-140°C) and lime spray drying (140°C), each with a downstream fabric filter for dust collection, show high overall removal efficiencies (99+%) for dioxins and furans for the fabric filter inlet temperatures noted. With dry lime injection, the removal of other organics (chlorobenzenes, chlorophenols, and polychlorinated biphenyls) fell markedly at 200°C compared with inlet fabric filter temperatures of 110-140°C (230-284°F).

5.5 Heavy Metals Control

The control of heavy metals is similar to organic pollutant control in that the effective control of particles and low flue gas temperatures are major factors. Sorbents, however, are not suspected to play a major role.

Toxic metals enter the collectors as solids, liquids, and vapors, and as the flue gas cools, the vapor portion converts to collectible solids and liquids. Figure 5-1 illustrates various heavy metals as they appear in flue gas and their relative theoretical concentrations (vapor pressures) as a function of flue gas temperature.

From Figure 5-1, it can be deduced that reduction of flue gas temperatures below 200°C (392°F) and high efficiency particulate collection should result in a very large reduction of metals, except for mercury (Hg), arsenates $(As_2O_3)_2$, and selenium (SeO_2 and Se_6). Corresponding reductions of these compounds proceed dramatically as temperatures are lowered. With the metals at there saturation temperatures, each is expected to be reduced by 90 percent for each additional temperature drop of 11 to 17°C (20 to 30°F). If this temperature effect is true, then wet scrubbing or wet/dry scrubbing which operates at saturation [$\sim$40°C (104°F)] will be most effective for total heavy metals control, while most dry and semi-dry systems will be effective for practically all metals except mercury, arsenic, and selenium.

Reported metals control data generally show 95-98 percent control or greater for most heavy metals except mercury. Vapor phase mercury control has been reported as follows: 75 to 85 percent control with spray dryer plus baghouse; 35 to 45 percent control with spray dryer plus ESP.[12] This is important in that vapor control is possible with fabric filters and ESPs, although limited data show the former to be clearly superior. Wet scrubbers would appear to be ideal for mercury control, but the collection of mercury vapors via condensation and capture is not well documented. Therefore, the choice of the most effective mercury control is still the subject of controversy (see Reference 10).

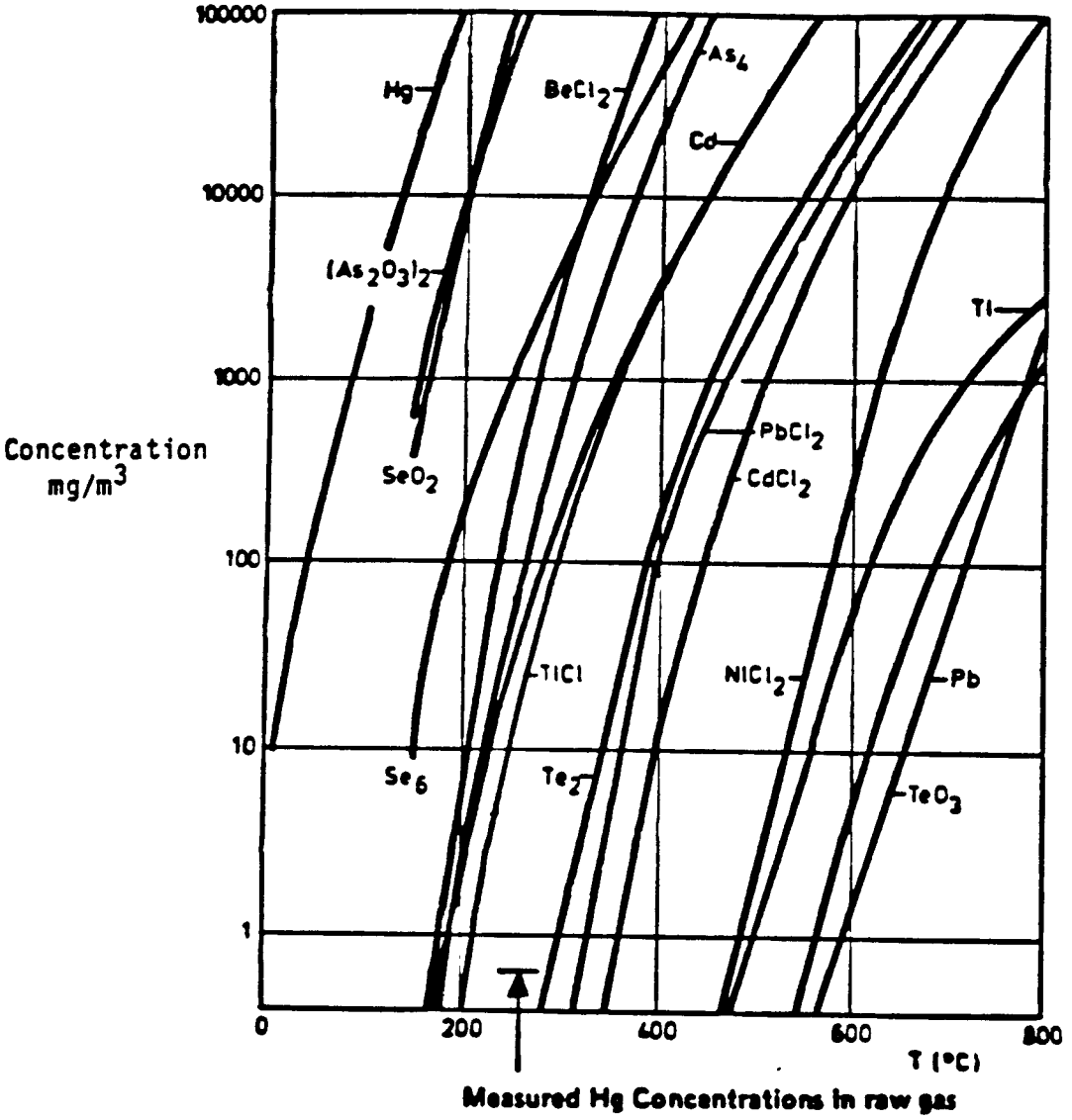

Figure 5-1. Saturation points of metal and metal compounds.[16]

6.0 OPERATION AND MAINTENANCE OF FLUE GAS CLEANING SYSTEM

This section is intended to summarize good operating and maintenance (O&M) practices for flue gas controls typically applied to municipal waste incinerators. Advanced controls, such as selective catalytic reduction and wet oxidation-absorption NO_x control, are not addressed here, as experience with these systems is too limited to warrant a discussion.

6.1 Electrostatic Precipitators[9]

Poor performance of an electrostatic precipitator can be divided into fundamental problems, mechanical problems, and operational problems. Fundamental problems include design inadequacies such as poor gas flow distribution, inadequate collector area, or unstable energization equipment. These are best addressed by replacement or redesign of problem areas and are independent of the O&M program. Mechanical problems include electrode misalignment, wire breakage, cracked collector surfaces, air inleakage, cracked insulators, plugged hoppers, and dust deposits. Defective components should be replaced once the cause of the problem has been identified. Operational problems, which are those last addressed by O&M programs, include process upsets, inadequate power input, electrical problems, rapper failures, and dust removal valve failures.

A good performance monitoring program for ESPs is recommended, which includes measurement of key operating parameters, performance tests, and monitoring and recordkeeping of key operating parameters. These parameters include gas volume flow, velocity, and temperature; chemical composition of gases and particles; particle concentrations, size distribution, and resistivity; and power input to the ESP. Use of on-line instrumentation (such as voltage and current meters, spark meters, rapper monitors, transmissometers, and hopper level indicators) are essential for proper ESP operation. Periodic performance testing for particulate concentrations, such as Reference Methods 5 or 17 and Method 9, are useful tools in evaluating long-term or gradual effects not easily monitored.

O&M practices include development of procedures for startup, shutdown, and routine operation. Inspections on a daily, weekly, and annual basis are recommended as shown in Table 6-1.

Inspection procedures and detailed O&M guidance for ESPs may be found in Reference 9.

TABLE 6-1. INSPECTIONS FOR ESP[9]

Daily:

- o Corona power levels (i.e., primary current, primary voltage, secondary current, secondary voltage) by field and chamber. (twice a shift)
- o Process operating conditions [i.e., firing rates, steam flow or load (lb/h), flue gas temperature, flue gas oxygen, etc.]. The normal operator's log may serve this purpose. (hourly)
- o Rapper conditions (i.e., rappers out, rapper sequence, rapper intensity, rapping frequency by field and chamber).
- o Dust discharge system (conveyors, air locks, valves for proper operation, hopper levels, wet-bottom liquor levels).
- o Opacity (i.e., absolute value of current 6-minute average and range of magnitude of rapper spiking) for each chamber duct if feasible. (2-hour intervals)
- o Abnormal operating conditions (i.e., bus duct arcing, T-R set control problems, T-R set trips excessive sparking). (twice a shift)
- o Audible air inleakage (i.e., location and severity).

Weekly:

- o Trends analysis (plot gas load V-I curves for each field and chamber and other key parameters to check for changes in values as compared with baseline).
- o Check and clean or replace T-R set cabinet air filters and insulator purge air and heating system filters.
- o Audible air inleakage (i.e., location and severity).
- o Abnormal conditions (i.e., bus duct arcing, penthouse and shell heat systems, insulator heaters, T-R set oil levels, and temperature).
- o Flue gas conditions exiting the ESP (i.e., temperature and oxygen content).
- o More extensive rapper checks (also optimize rapper operation if needed).

TABLE 6-1 (Cont'd)

Annually:

- o Transformer Enclosure

  HV line, insulators, bushings, and terminals
  Electrical connections
  Broken surge arrestors

- o High-Voltage Bus Duct

  Corrosion of duct
  Wall and post insulators
  Electrical connections

- o Penthouse, Rappers, Vibrators

  Upper rapper rod alignment
  Rapper rod insulators
  Ash accumulation
  Insulator clamps
  Lower rapper rod alignment
  Support insulator heaters
  Dust in penthouse area
  Corrosion in penthouse area
  Water inleakage
  HV connections
  HV support insulators
  Rapper rod insulator alignment

- o Collecting Surface Anvil Beam

  Hanger rods
  Ash buildup
  Weld between anvil beam and lower rapper rod

- o Upper Discharge Electrode Frame Assembly

  Welds between hanger pipe and hanger frame
  Discharge frame support bolts
  Support beam welds
  Upper frame levelness and alignment to gas stream

- o Lower Discharge Electrode Frame Assembly

  Weight guide rings
  Levelness of frame
  Distortion of the frame

TABLE 6-1 (Cont'd)

- o Stabilization Insulators

  Dust buildup and electrical tracking
  Broken insulators

- o Collecting Electrodes

  Dust deposits; location and amount
  Plate alignment
  Plate plumbness
  Plate warpage

- o Discharge Electrode Assembly

  Location of dust buildup and amount
  Broken wires
  Wire alignment
  Weight alignment and movement

- o Hoppers

  Dust buildup
  Level detectors
  Heaters
  Vibrators
  Chain wear, tightness, and alignment
  Dust buildup in corners and walls

- o Dust Discharge System

  Condition of valves, air locks, conveyors

- o General

  Corrosion
  Interlocks
  Ground system
  Turning vanes, distribution plates, and ductwork

6.2 Fabric Filters[8]

Poor performance of fabric filters can be categorized by (1) problems that affect all fabric filters, regardless of type, and (2) problems that are characteristic of a particular cleaning system design. The first category includes fabric failure, dust discharge problems, corrosion, and improper maintenance considerations.

Fabric failures that occur immediately after the baghouse goes on line are generally caused by improper installation or manufacturing defects. With proper design and operation, these failures are usually isolated in early stages of operation. Generally reverse-air and shaker-type fabric filters are more prone to initial failures than pulse-jet systems. Other fabric failures may be caused by high temperatures, condensation, chemical degradation, too high air-to-cloth ratio, high pressure drops, and bag abrasion. Dust discharge failures generally result from cool spots in the dust hopper, air leakage, or failure (either mechanical or human error) to keep the dust level in the hopper manageable. Also bag cleaning systems have failures generic to the system type. Failure to clean bags properly results in increased pressure drop, bag failure, and reduced bag life.

An effective monitoring program that includes performance evaluation and data collection is a necessity. The most important parameters to record and evaluate are the opacity of exhaust gases and pressure drop across an individual compartment or the entire baghouse. As a general rule, these are checked daily to determine if operation is within the normal range for that system.

O&M procedures include established startup, operating, and shutdown procedures which emphasize avoiding dew point conditions through cold gas bypass, auxiliary heat, and system purges. Preventive maintenance practices include periodic inspections of components as shown in Tables 6-2 through 6-4.

Inspection procedures and detailed O&M guidance for fabric filters may be found in Reference 8.

6.3 Scrubbers

Although wet scrubbers with liquid wastes are not expected to be installed in quantity, operation and maintenance procedures are presented briefly here. The more likely to be used dry scrubber systems are discussed separately from wet scrubbers. Considerations are based on calcium-based scrubbing for both systems, sodium-based systems being unlikely to be used because of soluble waste disposal restrictions and cost considerations.[11]

TABLE 6-2. TYPICAL MAINTENANCE INSPECTION SCHEDULE FOR A FABRIC FILTER SYSTEM[8]

Inspection frequency	Component	Procedure
Daily	Stack and opacity monitor	Check exhaust for visible dust.
	Manometer	Check and record fabric pressure loss and fan static pressure. Watch for trends.
	Compressed air system	Check for air leakage (low pressure). Check valves.
	Collector	Observe all indicators on control panel and listen to system for properly operating subsystems.
	Damper valves	Check all isolation, bypass, and cleaning damper valves for synchronization and proper operation.
	Rotating equipment and drives	Check for signs of jamming, leakage, broken parts, wear, etc.
	Dust removal system	Check to ensure that dust is being removed from the system.
Weekly	Filter bags	Check for tears, holes, abrasion, proper fastening, bag tension, dust accumulation on surface or in creases and folds.
	Cleaning system	Check cleaning sequence and cycle times for proper valve and timer operation. Check compressed air lines including oilers and filters. Inspect shaker mechanisms for proper operation.
	Hoppers	Check for bridging or plugging. Inspect screw conveyor for proper operation and lubrication.

TABLE 6-2 (Cont'd)

Inspection frequency	Component	Procedure
Monthly	Shaker mechanism	Inspect for loose bolts.
	Fan(s)	Check for corrosion and material buildup and check V-belt drives and chains for proper tension and wear.
	Monitor(s)	Check accuracy of all indicating equipment.
Quarterly	Inlet plenum	Check baffle plate for wear; if appreciable wear is evident, replace. Check for dust deposits.
	Access doors	Check all gaskets.
	Shaker mechanism	Tube type (tube hooks suspended from a tubular assembly): Inspect nylon bushings in shaker bars and clevis (hanger) assembly for wear. Channel shakers (tube hooks suspended from a channel bar assembly): Inspect drill bushings in tie bars, shaker bars, and connecting rods for wear.
Semi-annually	Motors, fans, etc.	Lubricate all electric motors, speed reducers, exhaust and reverse-air fans, and similar equipment.
Annually	Collector	Check all bolts and welds. Inspect entire collector thoroughly, clean, and touch up paint where necessary.

TABLE 6-3. ROUTINE INSPECTION DATA FOR REVERSE AIR FABRIC FILTERS[8]

o Routine Inspection Data

Stack	Average Opacity Opacity During the Cleaning Cycles (for each compartment)
Fabric Filter	Inlet and Outlet Static Pressures Inlet Gas Temperature Rate of Dust Discharge (Qualitative Evaluation) Presence or Absence of Audible Air Infiltration Presence or Absence of Clean Side Deposits Ripping Strength of Discarded Bags

o Baseline and Diagnostic Inspection Data

Stack	Average Opacity Opacity During the Cleaning Cycles (for each compartment)
Fabric Filter	Date of Compartment Rebagging Inlet Static Pressure (Average) Outlet Static Pressure (Average) Minimum, Average, and Maximum Gas Inlet Temperatures Average O_2 and CO_2 Concentrations (Combustion Sources Only) Time to Complete a Cleaning Cycle of all Compartments Length of Shake Period Length of Null Period Bag Tension (Qualitative Evaluation) Rate of Dust Discharge (Qualitative Evaluation) Presence or Absence of Audible Air Infiltration Presence or Absence of Clean Side Deposits
Stack Test	Emission Rate Gas Flow Rate Stack Temperature O_2 and CO_2 Content Moisture Content
Fan	Fan Speed Fan Motor Current Gas Inlet and Outlet Temperatures Damper Position

TABLE 6-4. ROUTINE INSPECTION DATA FOR PULSE-JET FABRIC FILTERS[8]

o Routine Inspection Data

Stack	Average Opacity Duration and Timing of Puffs
Fan	None
Fabric Filter	Inlet and Outlet Gas Temperatures Inlet and Outlet Static Pressures Presence or Absence of Clean Side Deposits Air Reservoir Pressure Audible Checks for Air Inleakage Qualitative Solids Discharge Rate

o Diagnostic Inspection Data

Stack	Average Opacity Peak Opacity During Puffs Duration and Timing of Puffs
Fan	Inlet Gas Temperature Speed Damper Position Motor Current
Fabric Filter	Inlet Gas Temperature Outlet Gas Temperature Inlet Static Pressure Outlet Static Pressure Inlet O_2 and CO_2 Content (Combustion Sources) Outlet O_2 and CO_2 Content (Combustion Sources) Qualitative Solids Discharge Rate Air Reservoir Pressure Frequency of Cleaning Presence or Absence of Clean Side Deposits Audible Air Infiltration

6.3.1 Lime/Limestone Wet Scrubbing[13]

Extensive surveys of lime/limestone wet scrubbing technology have shown the eight major areas of failure listed below in order of decreasing likelihood of failure:

- o mist eliminators
- o ductwork
- o absorber
- o stack
- o fans
- o pipes and valves
- o thickener
- o dampers

Design considerations allow ease in addressing these problems but are too detailed to be presented here. They are discussed extensively in Reference 13. Inspection procedures for each major unit operation are also detailed in this reference.

O&M practices, preventive maintenance procedures, and unscheduled maintenance procedures are presented in detail in the following discussion.

Standard O&M procedures for lime/limestone scrubbers include:

- o Variable Load Operation. With each change in load, the operator must check the system to verify that all in-service modules are operating in a balanced condition. As the acid gas concentrations in the inlet flue gas change, the FGD system should be able to accommodate and compensate for such change. Operator surveillance of system performance is needed, however, to verify proper system response (e.g., slurry recirculation umps can be added and removed from service as the acid gas concentration increases or decreases).

- o Verification of Flow Rates. The easiest method of verifying liquid flow rates is for an operator to determine the discharge pressure in the slurry recirculation spray header with a hand-held pressure gauge (permanently mounted pressure gauges frequently plug in slurry service). Flow in slurry piping can be checked by touching the pipe. If the piping is cold to the touch at the normal operating temperature of 52-54°C (125-130°F), the line may be plugged.

- o Routine Surveillance of Operation. Visual inspection of the absorbers and reaction tanks can identify scaling, corrosion, or erosion before they seriously impact the operation of the system. Visual observation can identify leaks, accumulation of liquid or scale around process piping, or discoloration on the ductwork surface resulting from inadequate or deteriorated lining material.

- Mist Eliminators. Many techniques have been employed to improve mist collection and minimize operational problems. The mist eliminator can be washed with a spray of process makeup water or a mixture of makeup water and thickener overflow water. Successful long-term operation without mist eliminator plugging generally requires continuous operator surveillance, both to check the differential pressure across the mist eliminator section and to visually inspect the appearance of the blade surface during shutdown periods.

- Reheaters. Inline reheaters are frequently subject to corrosion by chlorides and sulfates. Plugging and deposition can also occur but are more rare. Usually, proper use of soot blowers prevents these problems.

- Reagent Preparation. Operational procedures associated with handling and storage of solid reagent are generic to solids handling. Operation of pumps, valves, and piping in the slurry preparation equipment is similar to that in other slurry service.

- Pumps, Pipes, and Valves. Operating experience has shown that pumps, pipes, and valves can be significant sources of trouble in the abrasive and corrosive environments of lime/limestone FGD systems. The flow streams of greatest concern are the reagent feed slurry, the slurry recirculation loop, and the slurry bleed streams. When equipment is temporarily removed from slurry service, it must be thoroughly flushed.

- Thickeners. Considerable operator surveillance is required to minimize the suspended solids in the thickener overflow so that this liquid can be recycled to the system as supplementary pump seal water, mist eliminator wash water, or slurry preparation water. For optimum performance, the operator must maintain surveillance of such parameters as underflow slurry density, flocculant feed rate, inlet slurry characteristics, and turbidity of the overflow.

- Waste Disposal. For untreated waste slurry disposal, operation of both the discharge to the pond and the return water equipment requires attention of the operating staff. In addition to normal operations, the pond site must be monitored periodically for proper water level, embankment damage, and security for protection of the public. Landfill disposal involves the operation of secondary dewatering equipment. Again, when any of the process equipment is temporarily removed from service, it must be flushed and cleaned to prevent deposition of waste solids. For waste treatment (stabilization or fixation), personnel are required to operate the equipment and to maintain proper process chemistry.

- Process Instrumentation and Controls. Operation of the FGD system requires more of the operating staff than surveillance of automated control loops and attention to indicator readouts on a control panel. Manual control and operator response to manual data indication are often more reliable than automatic control systems and are often needed to prevent failure of the control system. Many problems can be prevented when an operator can effectively integrate manual with automated control techniques.

Preventive Maintenance Programs. Preventive maintenance is the practice of maintaining system components in such a way as to prevent malfunctions during periods of operation and to extend the life of the equipment. The goal of preventive maintenance is to increase availability of the FGD system by eliminating the need for emergency repair ("reactive maintenance").

The term preventive maintenance is synonymous with periodic maintenance. Such procedures may be as simple as lubrication of a pump or as complex as complete disassembly for inspection and overhaul. Some of the more important preventive maintenance procedures by subsystems are summarized in the following sections:

- Absorbers. Of primary concern in the absorber module is the integrity of the structural materials. Maintenance personnel should enter and inspect the absorber module at least semi-annually.

- Mist Eliminators. Scale deposits typically are the chief maintenance factor with mist eliminators. The mist eliminator may be subject to nonuniform flow or a faulty wash system. Wash spray pressure should be monitored. Mist eliminators should be inspected during forced or scheduled outages.

- Reheaters. Both inline and indirect reheaters are subject to scaling and corrosion. In addition to visual inspection, pressure testing and measurement of heat transfer efficiency are useful in quantifying the magnitude of a reheater problem. In a direct reheat system, the mixing chamber and the air heating equipment must be checked routinely.

- Dampers, Fans, Ductwork, and Chimneys. All points in the system must be checked for integrity of lining materials and for damage resulting from collection of condensation products in stagnant air spaces (e.g., duct elbows and corners). Components located in the wet portion of the system are subject to scaling and corrosion. Upstream fans and ductwork may be subjected to erosion.

- Reagent Preparation. Reagent preparation subjects the ball mill or slaker to abrasive wear. Because the equipment sees intermittent service, it should be inspected visually each time it is placed in service. Annual disassembly is also needed to check for excessive wear.

- Reagent Feed. Maintenance of the reagent slurry feed system is critical because failure of this equipment strongly impacts the FGD system operation. The slurry storage tank should be checked daily for leakage and associated equipment inspected for proper operation.

- Pumps, Pipes, and Valves. Slurry pumps are normally disassembled at least annually. The purpose of the inspection is to verify lining integrity and to detect wear and corrosion or other signs of potential failure. Bearings and seals are checked but not necessarily replaced. Pipelines also must be periodically disassembled or tested in other ways (e.g., hand-held nuclear and ultrasonic devices) both for solids deposition and for wear. Valves must be serviced routinely, especially control valves.

- Thickeners. Thickener coatings should be inspected periodically to prevent corrosion. Drag rakes, torque arms, and support cables must also be inspected for wear.

- Waste Disposal Equipment. Secondary dewatering devices, mixing components, and transport equipment must also have periodic maintenance to check for abrasive wear and solids deposition. Vacuum filters, both drum and belt type, require periodic replacement of the filter media. In a centrifuge, both the scroll coating and the bowl surfaces are subject to wear.

- Process Instruments and Controls. All electronic equipment (pH, flow, pressure, temperature, level, vibration, noise, and continuous monitors) must be calibrated periodically. Numerous installation and maintenance techniques have proved beneficial in ensuring the reliability of sensors. Ease of access to the sensors is very important. The sensors should be cleaned and calibrated routinely. Experience with process instrumentation and controls in FGD systems has shown that a good preventive maintenance program begins with daily operating procedures. Proper use of instruments will include daily flushing of most instrument lines in slurry service just before monitoring of process variables. Routine comparison of the instruments in a process stream with similar instruments in parallel streams can point out incipient failures. Operating data, especially from the startup test program, can also indicate potential problem areas.

Unscheduled Maintenance. Even the most rigorous preventive maintenance program will not prevent random failures to which the maintenance staff must respond. Most malfunctions are correctable by unscheduled (reactive) maintenance. In some situations, usually during initial system startup, design modifications may be required to bring the system into compliance with operating standards. Each subsystem of the FGD system is subject to malfunctions from a variety of causes. The discussion that follows introduces these problems and the probable responses.

- Absorbers. Structural failure of absorber internals and recycle pump suction screens have occurred as a result of excessive vibration, uncorrected corrosion damage, or high pressure differentials. These malfunctions must be repaired immediately before operation is resumed.

- Mist Eliminators. Failure of the mist eliminator is typically due to scaling and plugging. The scale may be removed either by thorough washing or by mechanical methods, in which maintenance personnel enter the absorber and manually chip away the scale deposits.

- Reheaters. Reheater malfunctions include tube failures in inline reheaters, damper problems in bypass reheat, or nonuniform flows in indirect reheaters. Correction of these problems will probably necessitate changes in equipment design.

- Fans. Fans can develop vibrations resulting from deposition of scale in wet service or from erosion of blades in dry service. The cause of the vibration must be eliminated and the fan repaired and rebalanced.

- Ductwork. Most problems associated with ducts develop over a long period. Sudden or gross failures, such as a major leak, call for immediate repair. Temporary repair or patching may suffice until the next scheduled outage. Acid condensation in a chimney can cause lining deterioration and subsequent damage to the base metal. These problems are usually identified during preventive maintenance inspections and require long-term solutions.

- Reagent Feed. Malfunctioning components such as slakers must be repaired in accordance with the manufacturer's instructions. Some facilities have experienced trouble with plugging of the lime/limestone feeder due to intrusion of moisture. Correction of these problems will probably necessitate changes in equipment design.

- Pumps, Pipes, and Valves. Excessive wear of the impeller or separation of the lining from the pump casing is a common problem. Operation of a slurry pipeline with insufficient flow velocity can cause clogging. High flow velocity or extended service can cause erosion. Malfunction and binding of a valve actuator are typically caused by wear-induced misalignment.

- Thickeners. The thickener underflow can become plugged because of excessive solids in the slurry or failure of the underflow pump. A plugged underflow or rapidly settling waste solids will produce a heavy "blanket" in the bottom of the thickener. The rake must then be raised so that the torque remains within acceptable limits. If the torque cannot be kept within limits, the thickener must be drained and the sludge blanket removed manually.

6.3.2 Semi-dry Scrubbing[20]

Although little information is published on O&M of dry or semi-dry scrubbing systems, some vendor-specific information has been compiled and condensed into a general guide for the spray dryer/absorber unit operation. Keep in mind that the particle collector is an integral part of the overall system and information in 6.1 or 6.2 should be added to the guidelines below in developing an integrated O&M program.

The following operations are key O&M considerations in spray dryer operation:

Temperature Measurements - A key operating parameter is the approach to adiabatic saturation temperature. The "approach" is the difference between the dry and wet bulb temperatures at the exit of the spray dryer (or fabric filter as appropriate). While instrumentation is available to monitor the wet bulb temperature, the reliability of such instrumentation is not as high as desired, and frequent manual wet bulb measurements are recommended for systems operated close to the adiabatic saturation temperature. Also, the spray dryer outlet thermocouples should be regularly checked for proper calibration.

Slurry Preparation. SO_2 removal performance depends greatly on lime reactivity. While most lime vendors produce a consistently high quality product, the quicklime reactivity should be checked frequently using the ASTM C110-10, 3-minute temperature rise test. The slaker outlet temperature should also be checked routinely to verify exit temperatures in the desired range of 77-89°C (170°F-190°F). This is a good indicator of proper slaker operation, suitable quicklime reactivity, and proper slaker exit solids content in the product slurry.

The lime and atomizer feed preparation systems require handling of slurries with high solids concentrations. Settling of solids can lead to buildup and pluggage of the handling equipment. Routine checks should be made for proper mixing of solids in the slurry and for buildup of solids in piping, on tank walls, etc. In particular, screens or strainers need to be checked frequently for pluggage.

The atomizer feed slurry solids content can be an important parameter for assuring proper solids drying and to assure that maximum recycle ratios are being employed. The solids contents are generally continuously measured by and controlled to some type of density meter reading. These meters are notorious for calibration drift and should be checked for calibration regularly. Some systems installed on utility boilers check density meter calibration as often as once per day.

Atomizers. If rotary atomizers are used in the spray system, the atomizer drive system requires continuous monitoring. The atomizer drive lubrication and cooling system should be continuously monitored and maintained according to the manufacturer's instructions. The vibrations produced by the drive system should also be monitored either continuously or at regular intervals. Improper operation of the atomizer drive system at normal operating speed can result in immediate and usually catastrophic failure. The atomizer should always be dynamically balanced prior to use. The atomizer wheel or disk should also be periodically inspected for nozzle blockage, solids buildup, and excessive nozzle surface wear.

Two-fluid nozzle or pressure atomization is mechanically a much simpler process than rotary atomization and requires less rigorous monitoring. Nozzles should be periodically inspected for blockage, wear, and corrosion. Nozzles should be properly positioned inside the reactor vessel, and all fittings should be free of leaks. Liquid and air pressure should be monitored and kept at the appropriate levels to assure proper atomization. The spray dryer vessel should be periodically inspected to ensure that a nozzle or several nozzles are not partially plugged and producing a coarse spray which has caused a buildup of wet solids on vessel walls.

REFERENCES

1. Municipal Waste Combustion Study - Data Gathering Phase. Preliminary Draft. Radian Corporation, October 16, 1985, Part I, Chapter 4.0.

2. Municipal Waste Combustion Study: Combustion Control of Organic Emissions. EPA/530-SW-87-021c, June 1987.

3. DuBard, J. L., Southern Research Institute. Private Communication to Dale L. Harmon, EPA/AEERL, October 8, 1986.

4. DuBard, J. L., Southern Research Institute. Private Communication to Dale L. Harmon, EPA/AEERL, October 28, 1986.

5. Clarke, M. J., "Emission Control Technologies for Resource Recovery." Presented at the Symposium on Environmental Pollution in the Urban Area, Booklyn, NY, Subsection of the American Chemical Society, March 15, 1986.

6. Review and Update of PM Emissions Database for Solid Waste-Fired Industrial Boilers. Memorandum. Radian Corporation, August 29, 1986.

7. Municipal Waste Combustion Study: Emission Data Base for Municipal Waste Combustors, EPA/530-SW-87-021b, June 1987.

8. Operation and Maintenance Manual for Fabric Filters. EPA-625/1-86-020, June 1986, pp. 2-1 through 2-17.

9. Operation and Maintenance Manual for Electrostatic Precipitators. EPA-625/1-85-017, September 1985, pp. 5-1 through 6-72.

10. Assessment of Flue Gas Cleaning Technology for Municipal Waste Combustion. Draft Report. Acurex Corporation, September 1986.

11. Ando, J. Recent Developments in SO_2 and NO_x Abatement Technology for Stationary Sources in Japan. Draft Report. (to be published as an EPA report in 1987).

12. Ellison, William H. "Status of German FGD and $DeNO_x$." Presented at the Third Annual Pittsburgh Coal Conference, Pittsburgh, PA, September 9, 1986.

13. Flue Gas Desulfurization Inspection and Performance Evaluation. EPA-625/1-85-019, October 1985, pp. 99-222.

14. Scrubber-Adsorber Newsletter. McIlvaine Co., Northbrook, IL, July 30, 1986, No. 145, pp 3-6.

15. The National Incinerator Testing and Evaluation Program: Air Pollution Control Technology. Environment Canada, Ottawa, Ontario. Report EPS 3/UP/2, September 1986.

16. Moeller, J. T., Jorgensen, C., and Fallenkamp, F., "Dry Scrubbing of Toxic Incinerator Flue Gas by Spray Absorption." Presented at ENVITEC 83, Dusseldorf, W. Germany, February 21-24, 1983.

17. Neilsen, K. K., Moeller, J. T., and Rasmussen, S., "Reduction of Dioxins and Furans by Spray Dryer Absorption from Incinerator Flue Gas." Presented at Dioxin 85, Bayreuth, W. Germany, September 16-19, 1985.

18. Environmental Test Report: Marion County Solid Waste-to-Energy Facility. Ogden Projects, Inc., Emeryville, CA. Report No. 107, November 21, 1986.

19. Teller, A. J., "The Landmark Framingham, Massachusetts, Incinerator." Presented at the Hazardous Materials Management Conference, Philadelphia, PA, June 5-7, 1984

20. Design and Selection Considerations for Spray Dryer Based Flue Gas Desulfurization Systems. EPA Contract 68-02-2994, WA 1/081. Radian Corporation, September 30, 1986, pp. 5-1 to 5-3.