7397-79-03

National Emission Standards for Halogenated Solvent Cleaning: Summary of Requirements for Implementating the NESHAP

September 1997

DISCLAIMER

This report is not a legally binding document and is not meant to replace the published regulation titled "National Emission Standard for Hazardous Air Pollutants (NESHAP): Halogenated Solvent Cleaning" (59 FR 61801). This document discusses specific aspects of the regulation and may not cover all parts of the regulation. It is intended solely as guidance, does not represent final Agency action, and is not ripe for judicial review. It is not intended, nor can it be relied upon, to create any rights enforceable by any party in litigation with the United States. The EPA may change this document at any time without public notice.

TABLE OF CONTENTS

Section **Page**

1.0 INTRODUCTION 1-1

2.0 SUMMARY OF THE RULE 2-1
- 2.1 Which Sources are Affected? 2-1
- 2.2 When Must Sources Comply? 2-5

3.0 DETERMINE MACHINE TYPE AND SIZE 3-1
- 3.1 Cleaning Machine Type 3-1
  - 3.1.1 Batch vs. In-Line 3-1
  - 3.1.2 Vapor vs. Cold 3-1
  - 3.1.3 Batch Cold Machines 3-4
- 3.2 Cleaning Machine Size 3-4
  - 3.2.1 Batch Cold Machines 3-4
  - 3.2.2 Batch Vapor Machines 3-4
  - 3.2.3 In-line (cold & vapor) Machines 3-8
  - 3.2.4 Calculating Solvent-Air Interface Area 3-8
  - 3.2.5 Calculating Cleaning Capacity 3-8

4.0 DETERMINING COMPLIANCE OPTIONS 4-1
- 4.1 Batch Vapor Machines 4-1
  - 4.1.1 Equipment Compliance Options 4-1
  - 4.1.2 Overall Emission Limit 4-5
  - 4.1.3 Machines Without a Solvent-Air Interface 4-5
- 4.2 In-line Machines 4-7
  - 4.2.1 Machines Without a Solvent-Air Interface 4-7
- 4.3 Batch Cold-cleaning Machines 4-7

5.0 INSPECTION PROCEDURES 5-1
- 5.1 Preparing for the Inspection 5-1
- 5.2 On-site Inspection 5-2
  - 5.2.1 General Protocol 5-2
  - 5.2.2 Specific Requirements 5-3
- 5.3 Post-inspection Follow-up 5-5

6.0 QUESTIONS AND ANSWERS 6-1

7.0 OTHER IMPLEMENTATION MATERIALS 7-1

OCW 3821430

TABLE OF CONTENTS (Continued)

Section **Page**

APPENDIX A - Glossary

APPENDIX B - Checklist

B.1 Applicability Checklist
B.2 Batch Vapor Machines or In-Line (Vapor or Cold) Checklist
B.3 Batch Cold-Cleaning Machines Checklist

APPENDIX C - Conversion Chart

APPENDIX D - Emission Limits for Machines Without a Solvent-Air Interface

LIST OF FIGURES

Figure		Page
2-1	Applicability Flow Chart	2-2
2-2	Example Weight-Average Calculation	2-4
3-1	Batch Vapor Cleaning Machine	3-2
3-2	In-Line Cleaning Machine	3-3
3-3	Remote Reservoir Cleaning Machine	3-5
3-4	Immersion Cleaning Machine	3-6
3-5	Calculation of the Solvent-Air Interface	3-8
3-6	Solvent Cleaning Machine Cleaning Capacity = IW x IL x D	3-10
4-1	Batch Vapor Solvent Cleaning Machines Compliance Options	4-2
4-2	In-Line Solvent Cleaning machine Compliance Options	4-8
4-3	Batch Cold Cleaning Machines Compliance Options	4-9

LIST OF TABLES

Table		Page
4-1	Control Combinations for Batch Vapor Cleaning Machines	4-5
4-2	Control Combinations for In-Line Cleaning Machines	4-7
7-1	Other Implementation Materials for the Halogenated Solvent Cleaning NESHAP	7-3

1.0 INTRODUCTION

On December 2, 1994, the U.S. Environmental Protection Agency promulgated the final rule for the national emission standards for hazardous air pollutants (NESHAP) for halogenated solvent cleaning (59 FR 61801). These standards implement Section 112 of the Clean Air Act (CAA), and can be found in 40 Code of Federal Regulations (CFR) Part 63, Subpart T. Subsequent amendments and corrections to the rule can also be found in Subpart T. Subpart T is located on the EPA Technology Transfer Network (TTN) at http:/www.epa.gov/docs/epacfr40/chapt-I.info/subch-c/40P0063/.

The halogenated solvent cleaning NESHAP was enacted to reduce emissions of certain halogenated solvents that have been identified as hazardous air pollutants (HAPs). As promulgated, the standard includes multiple alternatives to allow owners or operators maximum compliance flexibility. These alternatives which are summarized in Section 4.0, include an equipment standard with work practice requirements and an overall emission standard.

This document focuses on inspection of affected halogenated solvent cleaning machines and provides tools for ensuring compliance with the standard. The use of this document is not a requirement of the rule. Instead, it is intended to educate and provide guidance to EPA regional, state, and local agency personnel, who will be responsible for implementing and enforcing many of the provisions of this standard through inspections. Other materials have been developed that provide background information on the halogenated solvent cleaning NESHAP and instruct owners and operators on how to comply. Therefore, this document will not exhaustively dissect and discuss the rule, but will refer the reader to places where background information is already available. It is recommended that this document be used in conjunction with the EPA publication "Guidance document for Halogenated Solvent Cleaner NESHAP", EPA-453/R-94-081, April 1995. The publication is located on the EPA TTN at http://www.epa.gov/ttn/sbap/access.html. The file name is haloguid.zip, dated November 12, 1996.

A set of applicability and compliance checklists are appended to this document. These checklists provide the detail needed by an inspector to assess compliance with the standard for each type of halogenated solvent cleaning machine affected. The information presented in the body of this document is intended to equip those who will be using the checklists and to provide a framework for applying them in the field. The implementing authority is encouraged to use the checklists or modify them to meet state and local needs.

Section 2.0 briefly summarizes the sources to which this NESHAP applies. Section 3.0 illustrates the general types and sizes of solvent cleaning machines that an inspector could encounter in the field. Compliance options are outlined in Section 4.0, which presents flow charts that will help determine the provisions that apply to different solvent cleaning machines. Section 5.0 suggests procedures to follow before, during, and after a field inspection of a solvent cleaning machine, and lists the tools and methods an inspector will need to use. Commonly asked questions about implementing the standard, along with suggested answers, are presented in Section 6.0. Other materials that might be helpful on the halogenated solvent cleaning NESHAP are listed in Section 7.0. A glossary of terms associated with the standard can be found in Appendix A. A set of applicability and compliance checklists appears in Appendix B. Appendix C presents a unit conversion chart, and Appendix D contains a table of emission limits for machines with no solvent-air interface area.

2.0 SUMMARY OF THE RULE

2.1 Which Sources are Affected?

The halogenated solvent cleaning NESHAP rule applies to solvent cleaning machines. Unlike some rules, this NESHAP does not apply to the facility, but to each individual machine. Therefore, compliance is determined machine by machine and affects both major and non-major (ie., area) sources of Hazardous Air Pollutants (HAPs) . This NESHAP applies to solvent cleaning machines that use a solvent containing 5 percent or more by weight of any one or any combination of the following halogenated solvents:

- Carbon tetrachloride (CAS No. 56-23-5)
- Chloroform (CAS No. 67-66-3)
- Perchloroethylene (CAS No. 127-18-4)
- 1,1,1-Trichloroethane (CAS No. 71-55-6)
- Trichloroethylene (CAS No. 79-01-6)
- Methylene chloride (CAS No. 75-09-2)

In the rule, the definition of solvent cleaning machine *excludes* the following:

- Small buckets, pails, or beakers with capacities less than 7.6 liters (2 gallons)
- Wipe cleaning activities, such as cleaning using a rag containing [1] halogenated solvent or a spray cleaner containing halogent solvent.

Therefore, these uses of halogenated solvents are not covered by the requirements of this rule. Figure 2-1 presents the above applicability criteria in the form of a flow chart.

---

[1]Found in the corrections to final regulations published on June 5, 1995 60 FR 29485

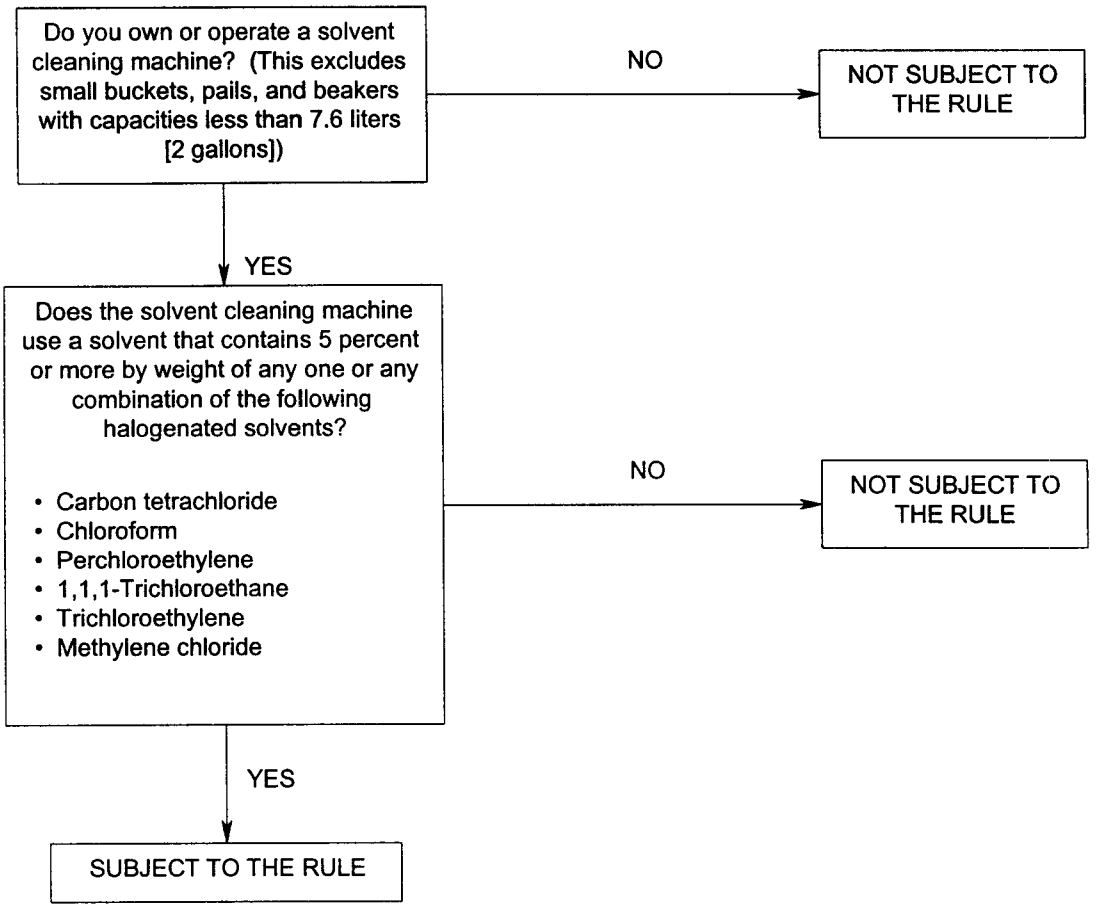

Figure 2-1. Applicability Flow Chart

Generally, the listed solvents (when used in cleaning operations) are used in amounts much greater than 5 percent by weight. If the halogenated solvent content is greater than 5 percent by weight, no documentation of solvent content is required.

A solvent may be used that has a solvent content below the 5-percent cut-off level. In these cases, documentation is required to demonstrate that the solvent falls below this cut-off. For solvents that are used as supplied (i.e., without further mixing on site), the material safety data sheets (MSDS) should provide sufficient documentation of solvent content. This information (or equivalent as determined by the implementing agency) should be available from the source upon request.

If the facility to be inspected blends solvent on site (i.e., mixes solvents together), and the blend contains less than 5 percent by weight of the solvents listed above, the source must document that the resulting solvent content is below the 5-percent cut-off level. The solvent content of the blend can be calculated using a weighted average of the solvent contents of the individual constituents based on their respective MSDS. An example weight-average calculation is shown in Figure 2-2.[2]

Alternatively, the solvent content can be demonstrated using EPA Method 18, which is based on the use of a flame ionization detector. A test report from a Method 18 test showing a solvent content less than 5 percent is adequate to document that the rule does not apply to the solvent cleaning machine in question.

Demonstration of applicability should be determined each time there is a reformulation of an existing solvent or when a new solvent is used in a solvent cleaning machine.

---

[2]Blank forms are available in EPA Publication "Guidance Document for the Halogenated Solvent Cleaner NESHAP", EPA-453/R-94-081, April 1995

Example Calculation:

A facility blends solvent mixture X using three components. Knowing the mass of each component and its respective solvent content in the batch, calculate the total solvent content.

Step 1: Solvent Mixture X

Solvent Mixture Component	TW Total Weight of Component	S% % of Listed Solvent
1 = PCE	20g	0.3
2 = MC	30g	0
3 = TCE	10g	1.0
Total Weight of Solvent Mixture (M)	= 60g	

Step 2:

TW		S%		WS
20g	x	0.3	=	6g
30g	x	0	=	0
10g	x	1.0	=	10g
				TB = 16g

Step 3:

$$WS_1 + WS_2 + WS_3 = TB$$
$$6g + 0g + 10g = 16g$$

[Where, WS = weight of solvent in component
TB = Total WS per batch]

Sept 4:

$$(TB \div M) \times 100 = TW\%$$
$$(16g \div 60g) \times 100 = 27\%$$

Solvent mixture X contains 27 percent by weight of the listed solvents. Solvent mixture X is therefore considered to be a halogenated solvent, and solvent cleaning machines using solvent mixture X <u>are</u> subject to rule.

Figure 2-2. Example Weight-Average Calculation

2.2 When Must Sources Comply?

Compliance dates depend on whether the machine is an "existing" or "new" machine. An existing machine is one that was installed or reconstructed on or before November 29, 1993. A machine is defined as new if it was installed or reconstructed after November 29, 1993. Existing machines must comply by December 2, 1997. New machines must comply at startup or by December 2, 1994, whichever is later. If a source commences construction or reconstruction on a solvent cleaning machine on or before November 29, 1993, but does not use halogenated solvents until after December 2, 1994, the source has until December 2, 1997 or 60 days after commencing the use of the halogenated solvent to comply, whichever is later. A solvent cleaning machine moved within a contiguous facility or to another facility under the same ownership constitutes an existing machine. Specific reporting requirements are discussed in Section 4.0.

3.0 DETERMINE MACHINE TYPE AND SIZE

Once you have determined that the rule applies to the machine to be inspected, you will need to identify which type of machine it is. The type of machine determines the available compliance options. The three basic types of machines covered by this regulation are: **batch vapor, batch cold**, and **in-line** machines. In-line machines can be either vapor or cold.

3.1 Cleaning Machine Type

The rule has different requirements for different types of machines. Cleaning machine types are classified by how parts are processed through the machine (batch vs. in-line), and by whether or not solvent vapor is created in the cleaning process (vapor vs. cold).

3.1.1 Batch vs. In-Line

Batch: New parts or baskets of parts are introduced into a batch machine after the previous parts or baskets of parts have been cleaned. Examples of batch machines include "open top vapor" cleaning machines, which clean multiple batch loads simultaneously and are manually loaded, such as a "Ferris wheel" machines, and "cross-rod" machines that move parts semi-continuously through the cleaning process. Figure 3-1 is an example of a batch vapor machine with a cutaway to show internal features.

In-line: A cleaner is an in-line machine if the movement of the conveyor that carries parts is continuous. Figure 3-2 illustrates an in-line vapor machine.

3.1.2 Vapor vs. Cold

Vapor: A vapor machine heats the solvent enough to create vapor (the batch and in-line machines illustrated here are vapor machines).

Cold: A cold machine does not heat the solvent enough to create vapor. A carburetor cleaning machine is an example of a cold cleaning machine.

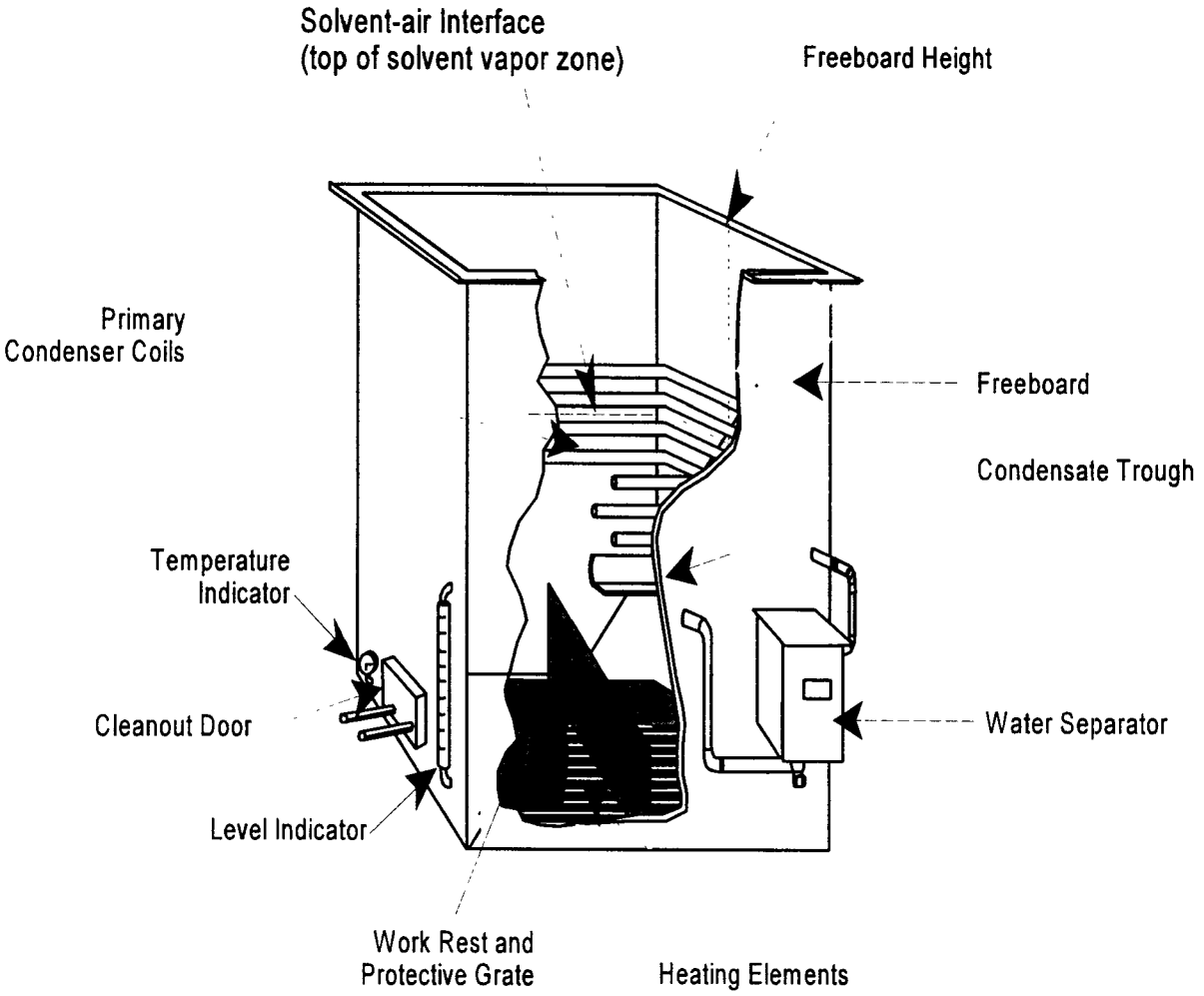

Figure 3-1. Batch Vapor Cleaning Machine

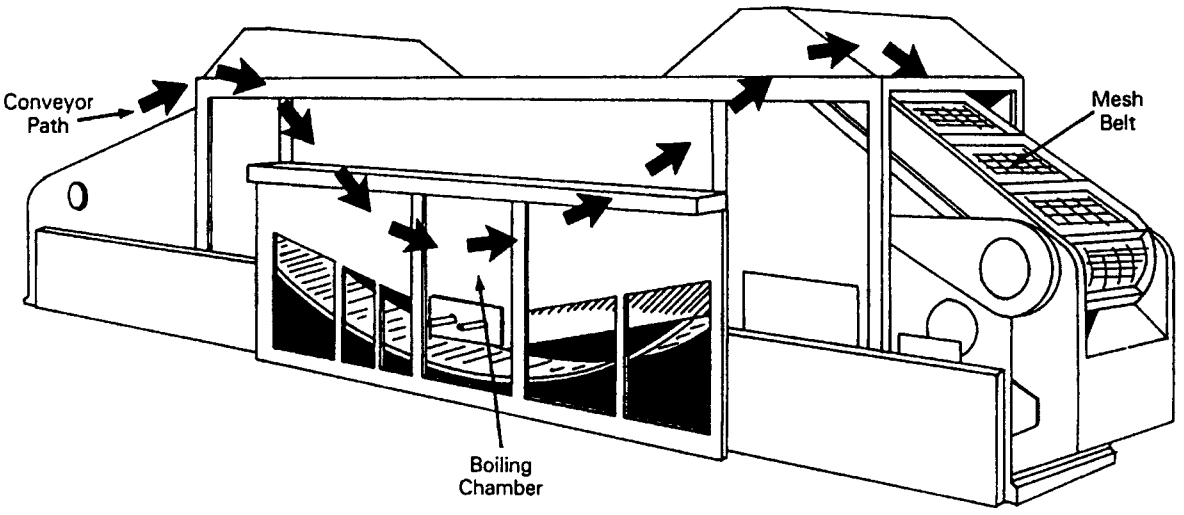

Figure 3-2. In-Line Vapor Cleaning Machine

3.1.3 Batch Cold Machines

The two different types of batch cold machines covered by the rule are immersion and remote reservoir.

- In a remote reservoir batch cold cleaning machine, solvent is sprayed onto the parts in a sink-like work area and drains back into an enclosed container through a small drain (see Figure 3-3).
- An immersion batch cold cleaning machine cleans parts by immersing them in the solvent (see Figure 3-4). Note that an immersion machine may store solvent in a remote reservoir, but is still considered an immersion machine if parts are immersed in the solvent.

3.2 Cleaning Machine Size

The rule has different requirements for different sizes of machines. Machine size is particularly important for determining compliance options for batch vapor machines.

3.2.1 Batch Cold Machines

The size of an affected batch cold cleaning machine does not determine requirements or compliance options, so size does not have to be determined or verified for this machine type.

3.2.2 Batch Vapor Machines

The size of a batch vapor machine is important, because the available compliance options depend on machine size. Additionally, machine size is needed to determine compliance with an overall emission limit (i.e., alternative standard, discussed in Section 4) if the alternative compliance option has been selected. Machine size is determined by calculating the solvent-air interface area of the machine. For machines that do not have a solvent-air interface (i.e., closed loop systems), the cleaning capacity will need to be determined.

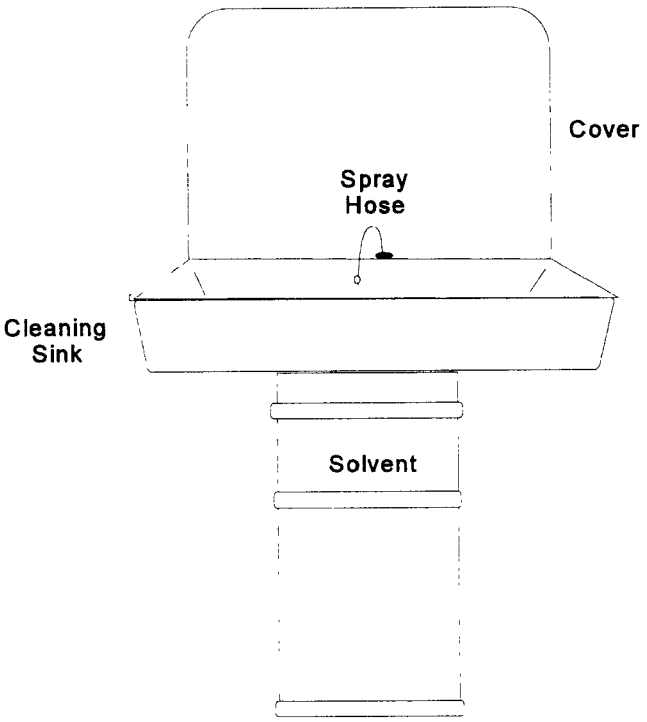

Figure 3-3. Remote Reservoir Cleaning Machine (Batch Cold Cleaning)

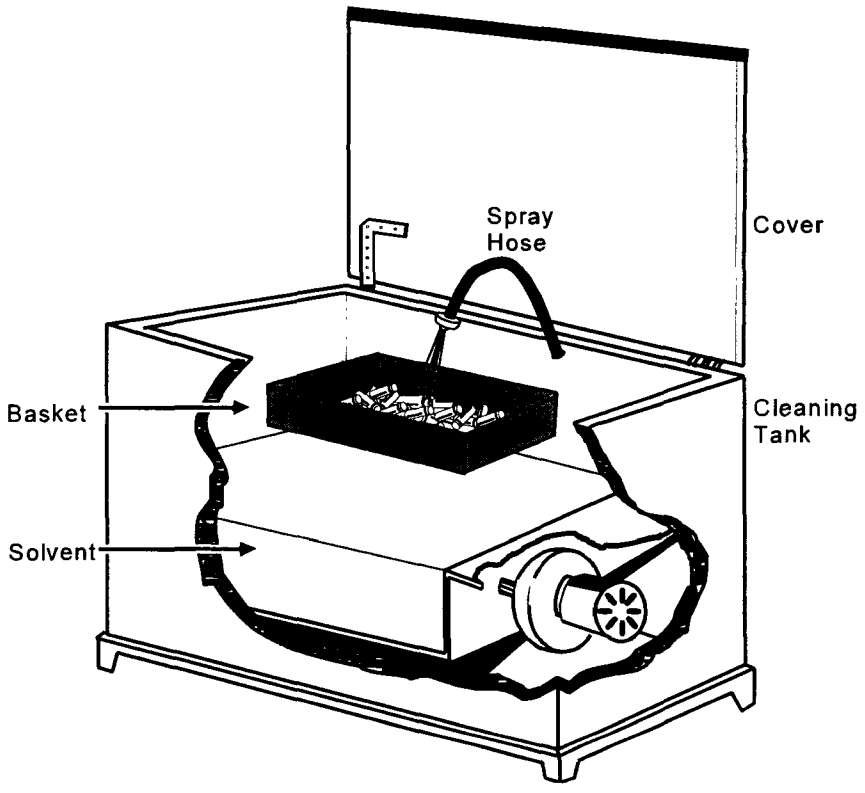

Figure 3-4. Immersion Cleaning Machine (Batch Cold Cleaning)

3.2.3 In-line (cold & vapor) Machines

Machine size is needed to determine compliance with an overall emission limit if the alternative compliance option has been selected (see Section 4.0).

3.2.4 Calculating Solvent-Air Interface Area

The solvent-air interface area for a vapor machine is the location of contact between the concentrated solvent vapor layer and the air. In a vapor machine, the vapor layer is formed when the primary cooling coils condense the rising solvent vapor. This typically occurs at the midline of the primary condenser coils (see Figure 3-1). For a cold machine, it is the location of contact between the liquid solvent and the air.

The solvent-air interface area can be determined in any of the following ways:

- The information can be provided by the manufacturer via literature on the machine; or
- The solvent-air interface area (SA) can be calculated by multiplying the width (W) (in meters [or feet]) by the length (L) (in meters [or feet]) of each sump and totaling the areas of all sumps (see Figure 3-5). Dimensions can be either measured or obtained from literature.

The solvent-air interface area is equal to the surface area of all of the cleaning tanks in the machine. For an in-line machine, it may not be possible to directly measure the solvent-air interface area. In such cases, you will need to rely on the manufacturer or literature supplied by the manufacturer for the appropriate information.

3.2.5 Calculating Cleaning Capacity

Some cleaning machines do not have a solvent-air interface area, because they do not expose the cleaning solvent to the ambient air during or between the cleaning of parts. An

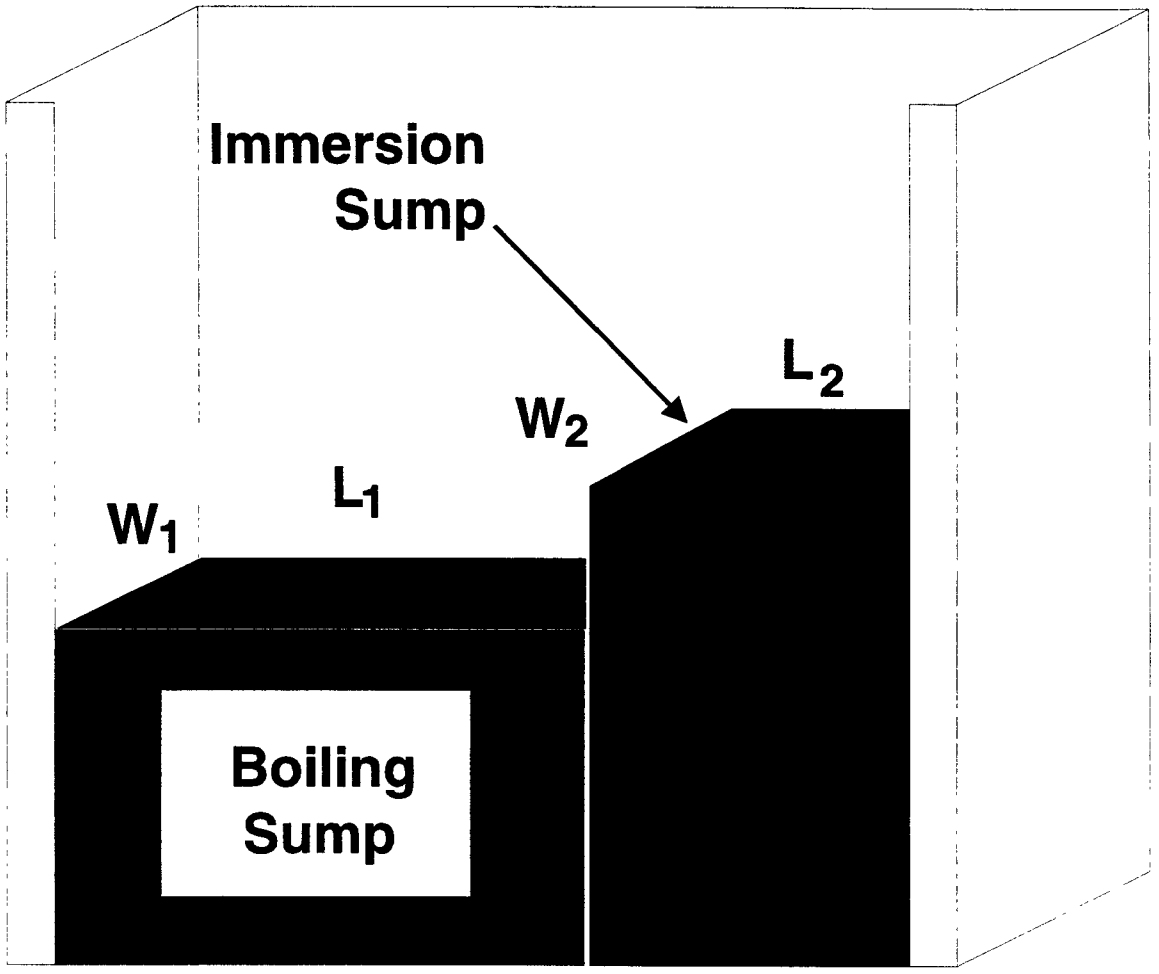

$$SA_1 = L_1 \times W_1$$
$$SA_2 = L_2 \times W_2$$

$$\text{Solvent-air Interface Area} = SA_1 + SA_2$$

Figure 3-5. Example Calculation of the Solvent-Air Interface

example of this type of cleaner is a vacuum-to-vacuum machine, which uses a processing chamber capable of withstanding both full vacuum and pressure. These machines operate in a closed loop, so solvent is not exposed to the air outside of the machine at any time.

For a machine that does not have a solvent-air interface area, the cleaning capacity must be determined or verified. Cleaning capacity may be available from the vendor or in the literature provided by the manufacturer. If the cleaning capacity is not directly available, it can be calculated from measurements of the internal width (IW), internal length (IL), and depth of the cleaner tank. These measurements can be taken from manufacturer literature or measured directly as shown in Figure 3-6.

The cleaning capacity is then calculated by multiplying the dimensions [CAPACITY = IW x IL x D]. The units of measurement can be meters or feet, resulting in a cleaning capacity in m^3 or ft^3. As discussed in Section 4, cleaning capacity will determine the required emission limit for the machine.

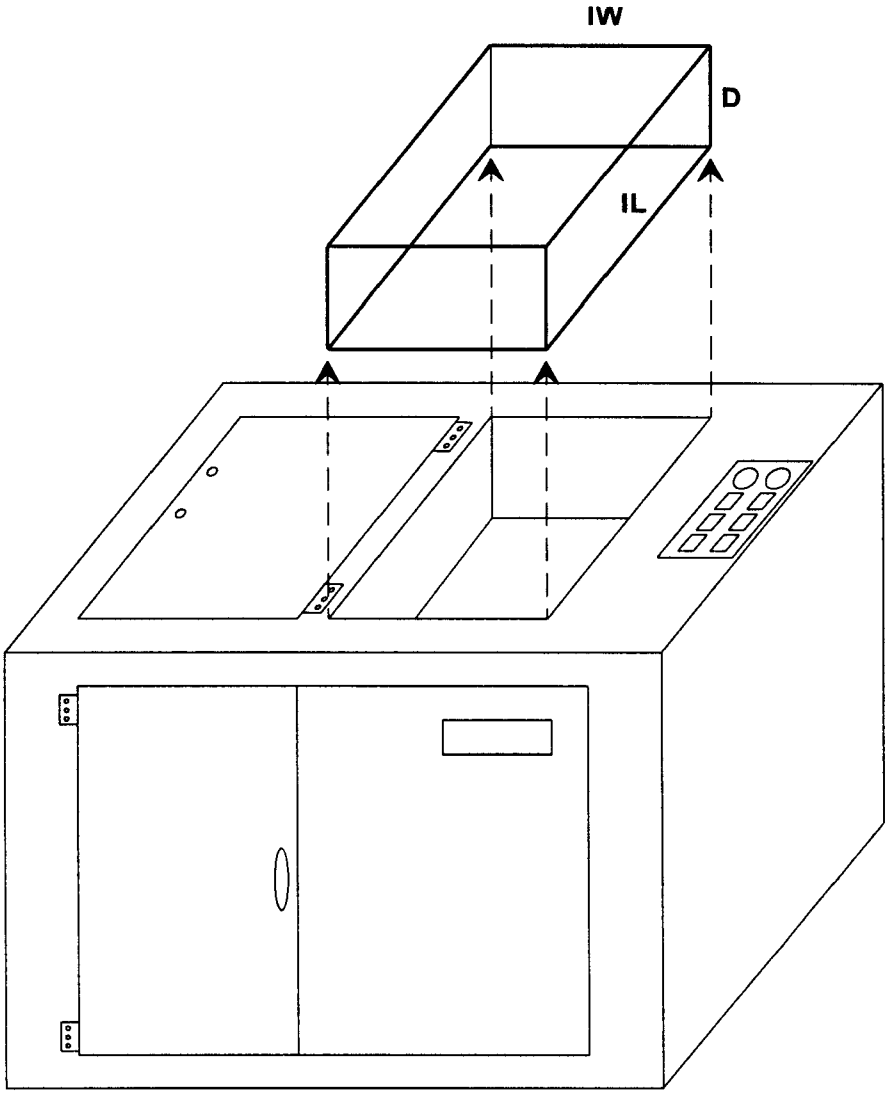

Figure 3-6. Solvent Cleaning Machine Cleaning Capacity = lW x lL x D

4.0 DETERMINING COMPLIANCE OPTIONS

To accurately assess compliance, the inspector should first be familiar with the options available to an owner or operator under the standard. In this section, the compliance options available for each type and size of machine are summarized. A more detailed listing and discussion of these options, along with their respective recordkeeping and reporting requirements, can be found in 40 CFR 63 Subpart T and in the "Guidance Document for the Halogenated Solvent Cleaner NESHAP" published by the U.S. Environmental Protection Agency (EPA-453/R/94-081). In addition, the compliance checklists in Appendix B delineate the compliance requirements for each option in sufficient detail to assess whether the machine being inspected is in compliance. The implementing agency will find it useful to review the source's initial notification report prior to conducting an inspection. The initial notification report should provide the compliance option selected by the source.

4.1 Batch Vapor Machines

Figure 4-1 summarizes in a flow chart the compliance options available for owners and operators of batch vapor machines under this NESHAP. For machines that have a solvent-air interface, the owner or operator can choose to comply with equipment compliance options (§63.463) or the overall emission limit (i.e., the alternative standard in §63.464).

4.1.1 Equipment Compliance Options

If equipment compliance options are chosen, the owner or operator must comply with the base design and work practice requirements listed below.

Base Design:

- Cover or reduced room draft
- 0.75 or greater freeboard ratio

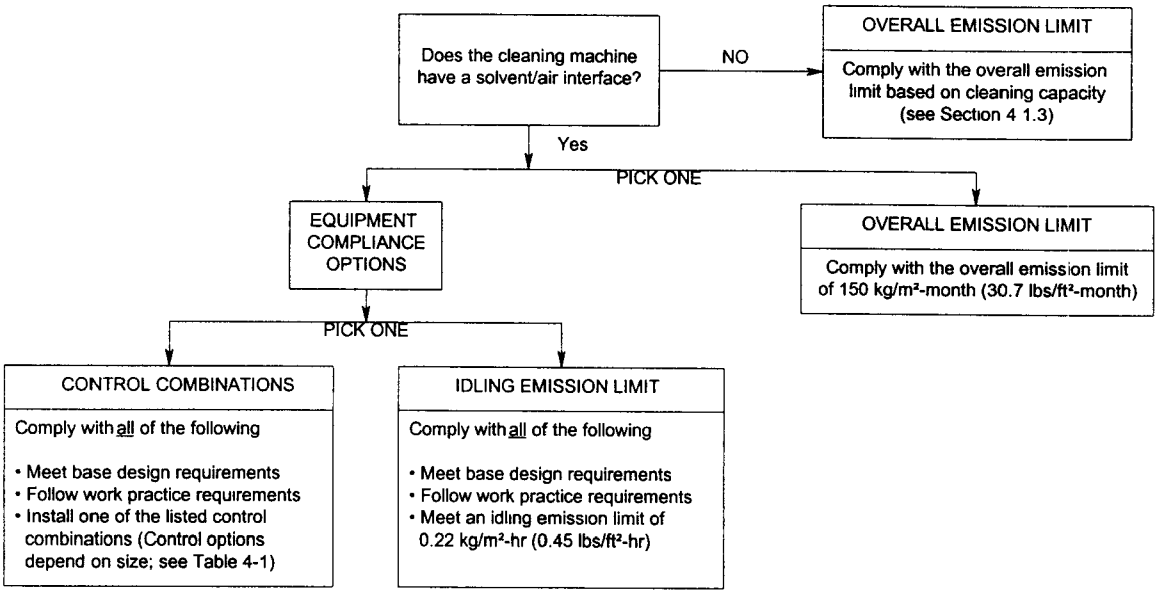

Figure 4-1. Batch Vapor Solvent Cleaning Machines Compliance Options

- Maximum parts handling speed of 3.4 m/min (11 ft/min)
- Liquid and vapor level indicators that shut off sump heat
- Primary condenser
- Carbon adsorber if using a lip exhaust

Work Practice:

- Control air disturbances in the cleaning machine and in the room.
- Do not introduce parts or baskets that occupy more than 50% of the solvent-air interface area unless the speed is 0.9 m/min (3 ft/min) or less (for open-top machines).
- Conduct spraying operations only in the vapor zone or areas not exposed to ambient air.
- Orient parts so that solvent drains freely.
- Remove parts only after solvent dripping stops.
- During startup, turn primary condenser on before sump heater.
- During shutdown, turn sump heater off before primary condenser.
- Maintain equipment as recommended by the manufacturer or using alternate maintenance practices approved by the EPA Administrator.
- Store solvent waste in closed containers.
- Do not clean absorbent materials.
- Take and pass an operator test, if requested.
- Transfer solvent using leakproof couplings.

Control Options:

If the control combinations option is chosen, the owner or operator is required to select one of the control combinations listed for that particular cleaning machine size (based on solvent-air interface area) and ensure that all of the controls marked for that control combination are installed on the machine. The control options available, which are summarized in Table 4-1, depend on the solvent-air interface area of the machine.

Idling Emission Limit:

The idling emission rate may be provided by the manufacturer or can be determined using Reference Method 307, which was finalized with the NESHAP. Control combinations and the idling emission limit, including Method 307, are discussed in detail in the "Guidance Document for the Halogenated Solvent Cleaner NESHAP."

4.1.2 Overall Emission Limit

If the owner or operator chooses instead to comply with the overall emission limit, the base design and working practice requirements do not apply. The machine only has to achieve an emission limit of 150 kg/m^2-month, identified in Figure 4-1, based on a 3-month rolling average. The methodology that must be used by the owner or operator to calculate monthly and 3-month rolling average emissions is discussed in the "Guidance Document for the Halogenated Solvent Cleaner NESHAP."

4.1.3 Machines Without a Solvent-Air Interface

Machines with no solvent-air interface must select the overall emission limit option. The applicable emission limit depends on the cleaning capacity of the machine. For machines with a cleaning capacity less than or equal to 2.95 m^3 (104 ft^3), determine the emission limit using either Table 6 of §63.464 (see Appendix D) or the equation:

$$EL = 330\ (Vol)^{0.6} \qquad (1)$$

where:

EL = 3-month rolling average emission limit (kg/month)

Vol = cleaning capacity of the machine (m^3).

Table 4-1. Control Combinations for Batch Vapor Cleaning Machines

(with solvent-air interface)

Batch Vapor Cleaning Machine Size	Control Combination Option	Controls						
		Working Mode Cover	1.0 Freeboard Ratio	Super Heated Vapor	Freeboard Refrigeration	Reduced Room Draft	Carbon Adsorber	Dwell
Solvent-air Interface Area Less than or equal to 1.21 m^2 (13 ft^2)	1	√	√	√				
	2			√	√			
	3	√			√			
	4		√	√		√		
	5				√	√		
	6		√		√			
	7				√			√
	8		√			√		√
	9				√		√	
	10		√	√			√	
Solvent-air Interface Area Greater than 1.21 m^2 (13 ft^2)	1		√	√	√			
	2				√	√		√
	3	√		√	√			
	4		√	√		√		
	5			√	√	√		
	6		√		√	√		
	7			√	√		√	

For machines with a cleaning capacity greater than 2.95 m^3 (104 ft^3), Equation 1 must be used to determine the applicable emission limit.

4.2 In-line Machines

Compliance options for in-line machines are illustrated in Figure 4-2. The options available depend on whether the machine is new or existing. Owners or operators choosing equipment compliance options for in-line machines must meet the same base design and work practice requirements listed above for batch vapor machines. The control combinations available for in-line machines are shown in Table 4-2.

If the owner or operator chooses the alternative standard, the owner or operator must achieve an emission limit, identified in Figure 4-2, based on a 3-month rolling average.

4.2.1 Machines Without a Solvent-Air Interface

An in-line machine with no solvent-air interface is subject to the same procedure for determining an emission limit (based on cleaning capacity) that is discussed above for batch vapor machines.

4.3 Batch Cold-cleaning Machines

The compliance options available to owners or operators of batch cold-cleaning machines depend on whether the type of machine is immersion or remote reservoir. Figure 4-3 illustrates the differences in the compliance options. Work practices for remote reservoir machines are as follows.

Table 4-2. Control Combinations for In-Line Cleaning Machines (with solvent-air interface)

In-Line Cleaning Machine Type	Control Combination Option	Controls				
			Super Heated Vapor	Freeboard Refrigeration	Carbon Adsorber	Dwell
Existing Machines	1	√	√			
	2	√		√		
	3			√		√
	4				√	√
New Machines	1		√	√		
	2			√	√	
	3		√		√	

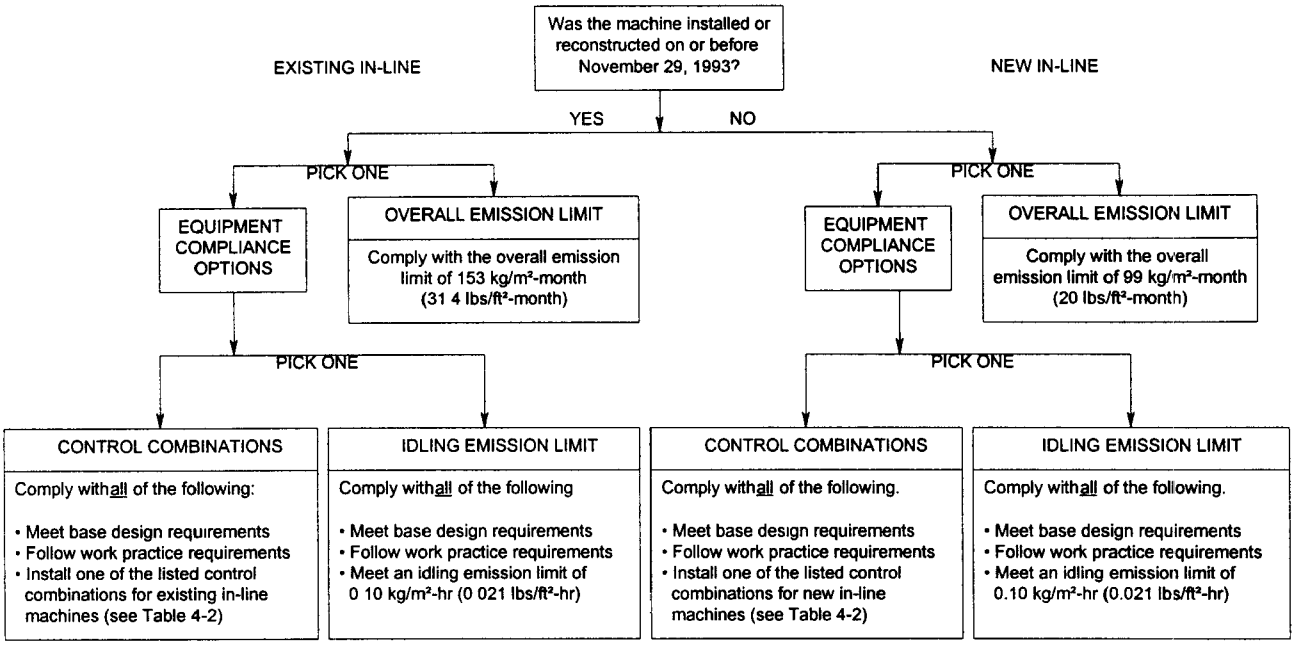

Figure 4-2. In-Line Solvent Cleaning machine Compliance Options

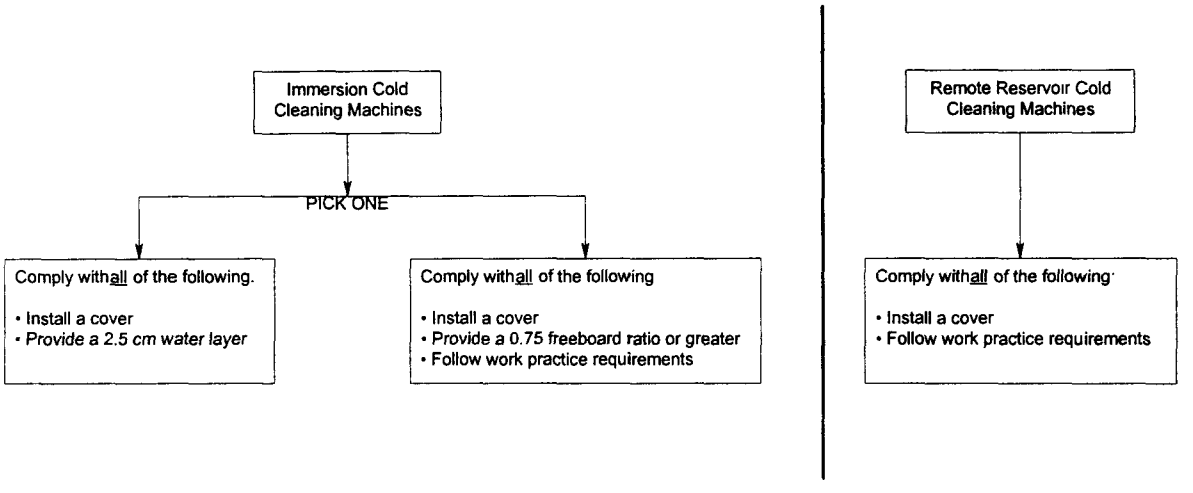

Figure 4-3. Batch Cold Cleaning Machines Compliance Options

Work Practices:

- Store solvent waste in closed containers.
- Flush parts in freeboard area.
- Minimize the pooling of solvent on and in parts.
- Do not fill machine above fill line.
- Clean up spills immediately.
- Store wiperags in closed containers.
- Do not agitate solvent to the point of causing splashing.
- When cover is open, control room drafts.
- Do not clean absorbent materials.

5.0 INSPECTION PROCEDURES

This section suggests guidelines for conducting an on-site compliance inspection of a halogenated solvent cleaning machine. Pre-inspection preparation, on-site procedures, and inspection follow-up are outlined. The applicability and compliance checklists appended to this document will be useful tools in directing both file review and equipment inspection.

5.1 Preparing for the Inspection

The first step in preparing to inspect a halogenated solvent cleaning machine should be to review records available for the cleaner and facility in the regulating authority's files, including any required reports related to the cleaning machine and general facility information from permit files. The agency file review should provide background information on the cleaning machine, allow determination of compliance with reporting requirements, and indicate which compliance options will need to be assessed on site. The inspector should complete as much of the applicability and appropriate compliance checklist as possible based on the file review before making the site inspection to reduce the amount of paperwork and time required at the facility. Information gleaned from agency files can then be checked and revised as needed during the inspection.

The next step should be to contact the facility being inspected (unless the inspection is to be purposefully unannounced). By contacting the facility in advance, the inspector can arrange to have all the owner's or operator's files on the cleaning machine(s) collected and available for review upon arrival. In addition, the inspector can ask that facility personnel most familiar with the machine(s) be available for interviews, and appropriate contacts can be established.

Finally, the inspectors should ensure that they have all the materials needed to conduct an inspection. Inspection tools could include:

- appropriate checklists
- a copy of the standard
- copies of the operator required tests
- a tape measure to check machine dimensions
- a stop watch to determine hoist speed
- a thermometer or thermocouple for temperature readings
- a velometer to check room-draft air speeds
- a colorimetric detector tube to measure exhaust concentrations from a carbon adsorber
- a calculator and calculation pad to check calculations required of the owner or operator
- a camera or video camera and film to record machine and facility conditions
- safety equipment, such as a hard hat, safety shoes, chemical resistant gloves, hearing and vision protection, etc.

5.2 On-site Inspection

5.2.1 General Protocol

Upon arrival at the facility, an inspection kick-off meeting is useful and appropriate. During the kick-off meeting, the inspector explains the purpose of the inspection and outlines the schedule for the inspection, meets important facility contacts, answers questions, and determines the location of records for the machine(s). The facility contact should be made aware that all cold halogenated solvent cleaners are covered by the standard so that none of the small, batch cold cleaners are overlooked during the visit. Also, the contact should be informed that wipe cleaning, spray cleaning, and solvent cleaning machines not using halogenated solvent, etc., are not covered by the standard to avoid spending time viewing these operations.

After the kick-off meeting the inspector can inspect the halogenated solvent cleaning machine(s). The applicability and appropriate compliance checklists serve to guide the inspector through the inspection. Completing the applicability checklist will help determine the machine type and size and whether it is new or existing. The inspector will then be directed to the appropriate compliance checklist for the machine. The compliance checklists walk the inspector through the requirements for the compliance option chosen for the machine. Where there is compliance, the inspector can simply check the "Yes" box. If the machine is out of compliance, the "No" box should be checked and an explanation logged on the checklist or a separate record.

After inspecting the machines, the inspector will want to review owner or operator files to verify information obtained from agency files and to check compliance with recordkeeping requirements. Material safety data sheets (MSDS) on solvents could also be collected at this time.

When on-site inspection and file review are complete, the inspector should have a wrap-up meeting with appropriate facility personnel. The purpose of the meeting is to summarize findings, explain any compliance violations noted, and inform the owner or operator of the next step.

5.2.2 Specific Requirements

The following list describes how compliance with certain requirements of the standard must be monitored, if it is assessed by the inspector. It is not the purpose of this document to provide instructions on how field equipment works, for which the manufacturer's manuals should be reviewed, but to direct its use according to the NESHAP.

- **Wind speed measurements for establishing reduced room draft:** (1) Determine the direction of the wind by rotating a velometer (or similar wind speed measuring device) withing six inches above the freeboard area of the machine until the maximum speed is located; (2) Orient the velometer in the direction of the wind at each of the four corners of the machine and record the reading for each corner; and (3) Total the values obtained at

each corner and divide by four to obtain the average wind speed. Average room wind speed should not exceed 15.2 meters/minute (50 feet/minute).

- **Hoist speed of automated parts handling:** Measure the time (in minutes) that it takes the hoist to move parts or a parts basket a measured vertical distance (in meters). The hoists speed can then be calculated by dividing the distance measured by the time recorded. For example, if the time measured for the hoist to travel from a point above the freeboard to a point at the fill line is 45 seconds (0.75 min.), and the distance between these two points is 2 meters, the hoist speed is: 2 m/0.75 min = 2.7 m/min. Parts handling speed should not exceed 3.4 meters/minute (11 feet/minute).

- **Exhaust concentration from a carbon adsorber:** Measure and record the exhaust concentration using a colorimetric detector tube while the machine is in working mode. The colorimetric detector must be designed to measure a concentration of 100 ppmv of solvent in air with an accuracy of ±25 ppmv. The samples must be taken at a point where the air flow is unobstructed, at least 8 stack or duct diameters downstream and 2 stack or duct diameters upstream of any flow disturbance such as a bend, contraction, expansion, or outlet. Exhaust concentrations should not exceed 100 ppm. Colormetric tubes are designed to detect specific chemicals. The regulatory agency may wish to carry tubes for each type of halogenated solvent regulated under the rule, then sample based on the halogenated content of the solvent used for a specific cleaning tank.

- **Freeboard ratio:** Determine freeboard ratio by measuring the freeboard height and the smallest interior freeboard width and dividing the height by the width. A freeboard ratio of 0.75 or greater is required when base design requirements apply. When using control options available in the rule, follow the freeboard ratio identified in the control options tables.

- **Super-heated vapor (SHV) temperature:** Measure the temperature of the super-heated vapor at the center of the SHV zone. The solvent vapor at the center of the super-heated vapor zone must be heated to at least 10°F above the solvent's boiling point.

- **Freeboard refrigeration temperature:** Measure the temperature of the freeboard refrigeration device at the center of the air blanket above the vapor zone while the machine is in idling mode. Freeboard refrigeration temperature must be no greater than 30% of the solvent's boiling point (°F).

- **Dwell time:** Measure the primary cleaning time, which is the amount of time required for parts or parts baskets to cease dripping after being placed in the vapor zone (parts must be at room temperature before being placed in the vapor zone). The allowable dwell time is no less than 35 percent of the primary cleaning time.

- **Solvent-air Interface area:** See the discussion in Section 3.2.4.

- **Cleaning Capacity:** See the discussion in Section 3.2.5.

5.3 Post-inspection Follow-up

Procedures to follow once the inspection is completed will be specific to the responsible regulating authority. A written report of the inspection should be forwarded to the owner or operator. The report describes the findings from the inspection, clearly delineates any compliance violation discovered, and educates the owner or operator about what is required to correct the violations and achieve compliance. If responsibility for enforcement will be transferred to another person or agency, the inspector should provide this information.

6.0 QUESTIONS AND ANSWERS

Below is a compilation of questions that an inspector may be asked about implementation of the standard. An answer approved by the U.S. Environmental Protection Agency follows each question. Most of the questions listed came from two sources: (1) inquiries made at a satellite downlink seminar for small business owners in May 1995 on compliance with the rule for vapor degreasers and (2) the Applicability Determination Index found on the TTN. Section 7.0 describes and references both of these sources.

Applicability

Q1. Does the standard have a lower cut-off level for solvent use?

A1. No. The standard has no de minimis or solvent use cut-off level to determine applicability. Except for buckets, pails, or beakers with capacities of 2 gallons or less, the standard applies to all solvent cleaning machines that use the listed solvents in concentrations of at least 5 percent.

Q2. Are solvent spray cans containing greater than 5 percent of a listed solvent covered under the standard?

A2. No. Spray cans and hand wipes are not covered under this standard.

Q3. Does this standard apply to both major and area sources?

A3. Some NESHAP do differentiate between major and area sources and regulate only major sources. However, this standard regulates both major *and* area sources.

Q4. Are paint strippers used to remove paint from wood furniture subject to 40 CFR 63, Subpart T?

A4. No. The finish on furniture is not a soil.

Q5. Is a bucket with a capacity of 2.4 gallons subject to 40 CFR 63, Subpart T?

A5. No. It is not subject if the following conditions are met: (1) a solvent capacity of 2 gallons or less is established with the container by clearly marking a fill line on the container below the 2-gallon mark, (2) written facility standard operating

procedures prohibit filling the container with a regulated solvent above the fill line, and (3) the facility follows the standard operating procedures.

Q6. **Does the halogenated solvent NESHAP apply to ordinary 5-gallon buckets or pails?**

A6. Depending on site-specific circumstances, pails or buckets may be required to comply with the batch cold cleaning machine standards in Section 63.462 of the halogenated solvent cleaner NESHAP. (Also, see Q&A #5 above.)

Q7. **An ultrasonic cleaning machine is not specified by name in the definition for solvent cleaning machines, but it still uses the halogenated HAP liquid solvent to remove soils from the surfaces of materials. Is it considered to be a solvent cleaning machine?**

A7. Yes. Even though it is not specifically stated by name, it is not excluded from the requirements of 40 CFR Part 63, Subpart T.

Q8. **A batch vapor coating extractor separates polyethylene from paper using trichloroethylene. Is this extractor subject to Subpart T?**

A8. No. Section 63.461 says a solvent cleaning machine is one that removes soils from surfaces. The described activity is not a cleaning operation.

Q9. **Is an enclosed tank system that sprays PCE onto dirty masks to clean them classified as a batch cold cleaning tank without a solvent interface?**

A9. Yes. This arrangement would be subject to Subpart T.

Q10. **Does Subpart T apply to a chemical stripping operation using solvents containing PCE?**

A10. Yes. Although this process differs from cleaning of parts, the use of a solution containing 5% or more of regulated solvents triggers the application of Subpart T.

Q11. **Are vapor degreasers used to restore the surface of molded plastic devices subject to the degreasing NESHAP rule?**

A11. Yes.

Compliance Options and Requirements

Q12. **For an in-line machine with a carbon adsorber, can the dwell area be outside the freeboard if solvent from the dwell goes back into the machine and the area is vented to the carbon adsorber?**

A12. Yes, if the solvent is recovered from the dwell area and returned to the machine, and vapors from the dwell area are vented through a carbon adsorber, the dwell area can be located outside the freeboard.

Q13. **If the alternative standard is chosen, do machines with lip exhausts have to have carbon adsorbers?**

A13. No specific control is required if the source chooses to comply with the alternative standard. A carbon adsorber would only be required under the equipment control options.

Q14. **Does a machine have to be cleaned out on a monthly basis?**

A14. The standard does not require that solvent cleaning machine be cleaned out on a monthly basis. However, if the alternative standard is chosen for compliance, the owner or operator might want to clean the machine monthly. Solvent contained in the solid waste from the machine does not have to be counted toward monthly emissions. If the machine is not cleaned and the solvent content of the waste is not determined, the waste solvent will be not be accounted for in the mass balance and will be included in the monthly emissions estimate.

Q15. **Does the 11-ft/min parts handling requirement refer to the conveyor speed, the vertical hoist speed, or both?**

A15. The automated parts handling speed of 3.4 m/min (11 ft/min) in the base design requirements refers to *both* the vertical and horizontal speeds of the system.

Q16. **To meet the freeboard requirements in the halogenated solvent cleaner NESHAP, would the following design be allowed: Mount a by-parting cover on top of an existing degreaser lip, then add the freeboard extension immediately on top of the by-parting cover structure?**

A16. The halogenated solvent cleaner NESHAP rule defines freeboard height. However, the rule does not require specific design parameters regarding freeboard construction. The objective of the NESHAP is to reduce emissions of selected

halogenated solvents used in parts cleaning. In developing the rule, EPA has provided the regulated community some flexibility on how best to meet this objective.

Q17. If room parameters are used and a door is closed during the test, can that door ever be opened or does the test need to be done with the door both opened and closed to ever be able to use a door?

A17. If a door is closed when measurements are taken to establish room conditions, it may still be used for entry and exit, but the door must remain closed at all other times to demonstrate compliance.

Definitions

Q18. What is meant by the "location" of the degreaser mentioned in the reporting requirements?

A18. The location required in reports that must be submitted under the standard refers to the physical address of the facility where the machine is located (as opposed to the mailing address). It does not refer to the location of the machine within the facility.

Measurements and Calculation Methods

Q19. Where can you get the test apparatus for Method 307?

A19. Reference Method 307 is described in Appendix A of 40 CFR 63 Subpart T. The Method involves reading level indicators that are required design components under the standard. Therefore, the only "equipment" needed will be incorporated as a component of the cleaning machine. No additional apparatus is required.

Q20. How do you determine the solvent content of the solid waste resulting from cleaning out a machine?

A20. Either engineering calculations or Method 25d are acceptable under the standard.

Q21. How often do values of idling emissions have to be verified?

A21. The idling emission rate must be initially established based on information from the manufacturer or a Reference Method 307 test. The conditions and parameters used to establish initial compliance must then be monitored periodically, but the

actual idling emission rate does not. However, if *any* of the conditions or parameters change, the idling emission rate will have to be reestablished using Method 307 under the new conditions.

Q22. Where is the interior dimension measured for calculating the freeboard ratio of a halogenated solvent cleaning machine?

A22. The measurements of the interior dimension should be made at the opening of the degreaser.

Q23. If a freeboard refrigeration device is used and the air blanket temperature has to be measured at the center of the air blanket, where is the center of the air blanket? Is the center in the middle of the length and width of the machine at some point above the condensers or is it at the middle of the length, width and height (distance from middle of primary condensing coils to top of freeboard)?

A23. As defined in the rule, the "centerline of the air blanket is equidistant between the sides of the machine." (§ 63.461)

Q24. When measuring wind speed with the velometer, is the velometer rotated in only the horizontal plane or rotated in all directions (horizontal and verticle)?

A24. The velometer should be rotated in a horizontal plane within six inches of the top of the freeboard area to determine the direction of maximum wind speed. The wind speed is then measured at the four corners of the top of the machine. Because individual velometers are different, check the owners manual for the correct method of operation for your velometer.

Operator Testing

Q25. How will the operator test be administered if the operator is unable to read or write in English?

A25. The test could be administered verbally or translated into a language understood by the operator. The specifics of administration in this type of situation will be up to the regulatory authority implementing the standard.

Q26. What if an operator misses questions on the test (i.e., what is considered passing), and what are the consequences?

A26. The test and the answers are supplied in 40 CFR 63 Subpart T, Appendix B, so operators should be able to thoroughly familiarize themselves with it in case it is given by an inspector. Whether an operator passes, and thus compliance is demonstrated, will be determined by the regulatory authority implementing the standard.

Regulatory Deadlines

Q27. Why is a machine defined as new or existing based on a date of November 29, 1993?

A27. November 29, 1993 was the date that EPA proposed the emission standard for halogenated solvent cleaning.

Q28. Can the compliance method selected for existing machines be changed before the December 2, 1997 compliance date?

A28. Yes, the method of compliance chosen by an owner or operator may be changed before the compliance date. A revision to the initial notification should be submitted to the regulating authority.

Q29. A solvent cleaning machine was built prior to 11/29/93, but has not used any regulated halogenated solvent since prior to 12/2/94. There are no plans to use it again. Is the machine considered an existing source and, therefore, subject to the 12/2/97 compliance date?

A29. Yes. It is an existing source, because it was built prior to the cutoff date.

Reporting

Q30. What are the consequences of late submittal or failure to submit the initial notification report?

A30. A late submittal or failure to submit the initial notification would be violation of the reporting requirements of the standard and, therefore, a violation of the standard itself. The appropriate regulatory or enforcement authority would deal with specific penalties associated with such violations.

Q31. Is an exceedance report required even if there is no exceedance?

A31. Yes, an exceedance report is required at least semiannually for all affected batch vapor and in-line cleaners. If no exceedance has occurred during the reporting period, the report should state so.

Q32. Do batch cold-cleaning machines require an initial notification report?

A32. Yes, an initial notification report must be submitted for affected batch cold cleaners.

Q33. If an existing machine will be shut down by December 2, 1997, is an initial notification report required?

A33. Yes, an initial notification report was due by August 29, 1995. The report, or any revision to the report, should clearly state that the machine will be shut down before the compliance date to avoid inquiries about the initial compliance report.

Q34. When are compliance notifications due?

A34. Initial compliance reports for existing machines are due by May 1, 1998. For new machines, initial compliance reports are due no later than 150 days after startup. Annual compliance reports are due before February 1 of the year following the year covered by the initial compliance report.

Solvents

Q35. Are there plans to eliminate or ban the use of any of the solvents covered by the rule?

A35. The Montreal Protocol on substances that deplete the ozone layer will phase out production and consumption of carbon tetrachloride and 1,1,1-trichloroethane, because they are ozone depleting substances. The EPA considers each of the other listed solvents to be well regulated, and there are currently no plans to ban their use.

Title V

Q36. What are the Title V permitting requirements for this NESHAP?

A36. If the solvent cleaning machine is located at a major source, it must be included in the Title V permit. For machines covered by this standard that are not located at a major Title V source, EPA is allowing the States flexibility to defer requirement of a permit for up to five years.

7.0 OTHER IMPLEMENTATION MATERIALS

Other materials are currently available that might be helpful to those responsible for implementing this NESHAP. Table 7-1 lists a number of these materials, ranging from published documents to videotapes to information on the Internet. The table presents the following information for each item:

- Title
- Publishing or producing organization
- Intended purpose
- Summary of contents
- Where it is available

Many of the documents listed can be down-loaded via the Internet from EPA's Office of Air Quality Planning and Standards (OAQPS) Technology Transfer Network (TTNWeb) [ttnwww.rtpnc.epa.gov/html/sscd/compli.htm]. If assistance is needed, the TTNWeb has a helpline at (919) 541-5384 to provide help to users.

As referenced in previous sections, some of the information in this implementation document was taken from the first item mentioned in the table, the "Guidance Document for the Halogenated Solvent Cleaner NESHAP", which was developed under the Small Business Assistance Program. The guidance document discusses the rule and compliance with the rule in detail and presents examples of forms that sources may use to comply with monitoring and recordkeeping requirements.

Another item that may be of particular interest to those who conduct field inspections but do not have extensive experience with vapor degreasers is the videotape "Clean Air Act Compliance for Solvent Degreasers: Regulatory Strategies for Manufacturers Affected by the Clean Air Act Amendment NESHAP for Halogenated Solvent Cleaners" (Satellite

Teleconference). The video captures the 4-hour satellite downlink session sponsored by EPA's Air Pollution Training Institute (APTI) that was produced to assist small businesses in complying with the standard. Segments of the video present case studies of compliance issues, with footage of batch vapor and in-line degreasers and their components. The instruction manual for this video, "Clean Air Act Compliance for Solvent Degreasers," published by the University of Tennessee Center for Industrial Studies, includes drawings of various types of halogenated solvent cleaners. Further information in the manual is listed in Table 7-1.

Finally, EPA's Office of Enforcement and Compliance Assurances (OECA) maintains a database called the Applicability Determination Index (ADI), which contains memoranda issued by EPA on applicability and compliance issues associated with the New Source Performance Standards (NSPS), NESHAP (Part 61, and MACT, Part 63), and chlorofluorocarbons (CFC). Recently issued determinations are added to the database on a quarterly basis. Determinations for Subpart T can be accessed on the TTNWeb.

Table 7-1
Other Implementation Materials for the Halogenated Solvent Cleaning NESHAP

Title	Published/Produced by:	Purpose	Contents	Where Available?
Guidance Document for the Halogenated Solvent Cleaner NESHAP EPA-453/R-94-081	U. S. EPA (OAQPS/ESD) Research Triangle Park, NC April 1995	Assist owners and operators of solvent cleaning machines, particularly in small business, to determine whether the NESHAP applies to them and compliance options available	• Applicability criteria • Descriptions and diagrams of different types of machines with corresponding compliance options and requirements • Alternatives to halogenated solvent cleaning • Appendices with calculation and monitoring instructions, recordkeeping forms, EPA Regional office contacts	TTNWeb [www.epa.gov/ttn/]
Clean Air Act Compliance for Solvent Degreasers	The University of Tennessee Center for Industrial Services April 1995	Help small business understand the NESHAP for halogenated solvent cleaners	• Applicability criteria and deadlines • Cleaner types (diagrams and descriptions) • Compliance strategies • Recordkeeping and reporting • Appendices with worksheets, reporting and recordkeeping forms, Title V overview	UT Center for Industrial Studies 423-974-2249 www.cis.utk.edu (In print only)
Permitting Guide for Solvent Degreasers to Comply with the Federal National Emission Standard for Hazardous Air Pollutant (NESHAP) for Solvent Cleaning and the Significant New Alternative Policy Requirements-Version 1.1 (DRAFT)	South Coast Air Quality Management District Los Angeles, CA August 20, 1996	Permitting guidance for SCAQMD relative to NESHAP for solvent cleaning machines and Title VI Significant New Alternatives Policy	• Permit application checklist • SNAP Program summary • Permit conditions for each solvent cleaner type and compliance option	South Coast AQMD 21865 E. Copley Dr. Diamond Bar, CA 91765-4182 909-396-2000 (In print only)

Table 7-1
Other Implementation Materials for the Halogenated Solvent Cleaning NESHAP (Continued)

Title	Published/Produced by:	Purpose	Contents	Where Available?
National Emission Standard for Hazardous Air Pollutants Halogenated Solvent Cleaning - Background Information for Final Standards EPA-453/R-94-071	U. S. EPA (OAQPS/ESD) Research Triangle Park, NC November 8, 1994	Provide information on final NESHAP	Summary of public comments on the proposed rule, EPA responses to the comments, and changes from the proposed rule	TTNWeb [www.epa.gov/ttn/]
Fact Sheet - Halogenated Solvent Cleaning Machine NESHAP	U. S. EPA Research Triangle Park, NC November 1994	Summary of NESHAP	Highlights of background, standards and impacts	TTNWeb [www.epa.gov/ttn/]
New Regulation Controlling Air Emissions from Solvent Cleaning Machines (Degreasers) EPA-453/F-94-083	U. S. EPA Research Triangle Park, NC March 1995	Brochure on compliance options and requirements of NESHAP	Summary of compliance options and requirements for each type of cleaning machine	TTNWeb [www.epa.gov/ttn/]
Understanding Regulations on Solvent Cleaning Equipment: What You Need to Know to Comply	Pacific Northwest Pollution Prevention Center (Northwest Business Assistance Network) November 1996	Provide compliance information to small businesses in Northwest with cold cleaners	Summary of provisions for batch cold cleaning machines and pollution prevention opportunities	[www.pprc.org/pprc]

Table 7-1
Other Implementation Materials for the Halogenated Solvent Cleaning NESHAP (Continued)

Title	Published/Produced by:	Purpose	Contents	Where Available?
Clean Air Act Compliance for Solvent Degreasers: Regulatory Strategies for Manufacturers Affected by the Clean Air Act Amendment NESHAP for Halogenated Solvent Cleaners. Satellite Teleconference.	University of Tennessee Center for Industrial Services and Center for Telecommunications and Video April 1995	Information to small business on compliance for vapor degreasers	• Explanation of Subpart T • Compliance case studies • Instruction on cleaner parts • Solvent substitution • Sources of assistance for small business • Question and answer sessions	(VHS video; 2 tapes)
Uniform Air Quality Training Program Course #233: Solvent Cleaning and Degreasing	California Air Resources Board	Slides from a training course for California inspectors of solvent cleaners and degreasers	• Descriptions of various solvent cleaners • Emissions and control devices • CA rule discussion • Inspection procedures	California Air Resources Board Compliance Division Contact: Randy Opfer 916-445-0961 [ropfer@arb.ca.gov]
Solvents: Cleaning, Degreasing, Recycling, and Disposing	California Air Resources Board December 1995	Manual to assist inspectors and operators conduct inspections of solvent operations	• Overview of California ARB • Overview of common solvents and their applications • Descriptions of various solvent operations and emissions control • Inspection procedures • California legal requirements • Discussion of toxics and halogenated solvents	California Air Resources Board/ Compliance Division/ Attn: Manager, Compliance Assistance Program/ P.O.Box 2815/ Sacramento, CA 95812 (In print only)

Table 7-1
Other Implementation Materials for the Halogenated Solvent Cleaning NESHAP (Continued)

Title	Published/Produced by:	Purpose	Contents	Where Available?
Halogenated Solvent Degreasers Air General Permit Notification Form	Florida Department of Environmental Protection (Division of Air Resources Management) June 25, 1996	Instruct sources on application for general Title V permit for halogenated solvent cleaners	• Procedures for use of general permit • Permit terms and conditions • Notification forms and instructions • Fact sheets	Division of Air Management Resources, MS-5510 2600 Blair Stone Rd. Tallahassee, FL 32399-2400 904-488-6140 [www.dep.state.fl.us/air/regulation/permitting/forms]
Ohio EPA Inspection Form, Fact Sheet, and Standard Terms & Conditions	Ohio EPA	Information for permit writers and inspectors of halogenated solvent cleaners	• Standard permit terms and conditions • Inspection forms • Fact sheet	[www.epa.ohio.gov/dapc/mact/degrease.html]
Sage 2.1, Solvent Alternatives Guide: User's Guide EPA-600/SR-95-049	U.S. EPA May 1995	Assist users in identifying alternatives to halogenated solvents	Interactive database that provides a list of potential alternative solvents based on user inputs	TTNWeb [www.epa.gov/ttn/] Contact: Charles Darvin 919-541-7633
Notification of Compliance Deadline	Lincoln-Lancaster County Health Department	Initial notification and statement of compliance form for cold cleaners	Form for sources using cold cleaning buckets subject to the rule	Lincoln-Lancaster County Health Dept. 3140 "N" Street Lincoln, NE 68510 Contact: Jim Fobben 402-441-8040 (in print only)

Table 7-1
Other Implementation Materials for the Halogenated Solvent Cleaning NESHAP (Continued)

Title	Published/Produced by:	Purpose	Contents	Where Available?
Project Summary, Demonstration of Alternative Cleaning Systems EPA-600/SR-95/120	U.S. EPA Office of Research and Development August 1995	Summarize evaluation of substitutes for halogenated solvents as part of the 33/50 program	• Objective • Methodology • Technical, environmental, and economic evaluations • Conclusions	TTNWeb [www.epa.gov/ordntrnt/ORD/Webpubs/projsum/index.html]

APPENDIX A

Glossary

GLOSSARY

Air blanket means the layer of air inside the solvent cleaning machine freeboard located above the solvent-air interface. The center of the air blanket is equidistant between the sides of the cleaning machine.

Automated parts handling system means a mechanical device that carries all parts and parts baskets at a controlled speed from the initial loading of soiled parts through the removal of the cleaned parts. Automated parts handling systems include, but are not limited to, hoists and conveyors.

Carbon Adsorber means a bed of activated carbon into which an air-solvent gas-vapor stream is routed and that adsorbs the solvent on the carbon.

Clean liquid solvent means fresh unused solvent, recycled solvent, or used solvent that has been cleaned of soils (e.g., skimmed of oils or sludge and strained of metal chips). The rule did not intend that usable solvent should be disposed. It intended that all metal and dirt soils be removed from the machine so that solvent emissions are not underestimated.

Construction means the on-site fabrication, erection, or installation of an affected source.

Cover means a lid, top, or portal cover that shields the solvent cleaning machine openings from air disturbances when it is in place and is designed to be easily opened and closed without disturbing the vapor zone. Air disturbances include, but are not limited to, lip exhausts, ventilation fans, and general room drafts. Types of covers include, but are not limited to, sliding, biparting, and roll-top covers.

Downtime mode means the time period when a solvent cleaning machine is not cleaning parts and the sump heating coils, if present, are turned off.

Dwell means the technique of holding parts within the freeboard area but above the vapor zone of the solvent cleaning machine. Dwell occurs after cleaning to allow solvent to drain from the parts or parts baskets back into the solvent cleaning machine.

Existing cleaning machine means a cleaning machine constructed or reconstructed on or before November 29, 1993. An existing machine is also a machine in which construction or reconstruction was commenced on or before November 29, 1993, but that did not meet the definition of a solvent cleaning machine on December 2, 1994, because it did not use a listed halogenated solvent liquid or vapor. A machines in this category shall become an existing source when the machine begins to use such liquid or vapor. A solvent cleaning machine moved within a contiguous facility or to another facility under the same ownership constitutes an existing machine.[3]

Freeboard height means for a batch vapor cleaning machine, the distance from the solvent-air interface, as measured during the idling mode, to the top of the cleaning machine. For an in-line cleaning machine, it is the distance from the solvent-air interface to the bottom of the entrance or exit opening, whichever is lower as measured during the idling mode. The freeboard height for a batch cold cleaning machine is the distance from the solvent fill line (the line that the sump is filled to) to the lip of the cleaning machine.

Freeboard ratio means the ratio of the solvent cleaning machine freeboard height to the smaller interior dimension (length, width, or diameter) of the solvent cleaning machine. For example, if the height of the freeboard is 2 meters and the smaller interior dimension is 1.8 meters, the freeboard ratio would be 2 meters/1.8 meters or 0.9.

Freeboard refrigeration device (FRD, also called a chiller) means a set of secondary coils mounted in the freeboard area that carries a refrigerant or other chilled substance to provide a

---

[3]Found in the corrections to final regulations published on June 5, 1995 60 FR 29485

chilled air blanket above the solvent vapor. The rule requires that a FRD have enough cooling capacity to cool the air in the freeboard area of the machine to a temperature no greater than 30 percent of the boiling point of the solvent being used. The following lists the temperature that a FRD must achieve for each of the solvents covered under the rule.

Solvent	Boiling Point (°F)	Maximum Allowed Air Blanket Temperature	
		°F	°C
Methylene Chloride	104	31	0
Trichloroethylene	189	57	14
1,1,1,-Trichloroethane	165	50	10
Chloroform	143	43	6
Carbon Tetrachloride	168	50	10
Perchloroethylene	250	75	24

Freeboard zone for a batch vapor cleaning machine, means the area from the solvent-air interface, as measured during the idling mode, to the top of the cleaning machine. For an in-line cleaning machine, it is the area within the solvent cleaning machine that extends from the solvent-air interface to the bottom of the entrance or exit opening, whichever is lower. The freeboard zone for a batch cold cleaning machine is the area from the solvent fill line (the line that the sump is filled to) to the lip of the cleaning machine.

Hoist means a mechanical device that carries the parts and parts baskets from the loading area into the solvent cleaning machine and to the unloading area at a controlled speed. A hoist may be operated by controls or may be programmed to cycle parts through the cleaning cycle automatically.

Idling mode means the time period when a solvent cleaning machine is turned on but is not actively cleaning parts.

Idling-mode cover means any cover or solvent cleaning machine design that allows the cover to shield the cleaning machine openings during the idling mode. A cover that meets this definition can also be used as a working-mode cover if that definition is also met.

Lip exhaust means a device installed at the top of the opening of a solvent cleaning machine that draws in air and solvent vapor emissions from the freeboard area and ducts the air and vapor away from the solvent cleaning area.

New cleaning machine means a solvent cleaning machine for which the construction or reconstruction is commenced after November 29, 1993.

Potential to emit, as defined in 40 CFR Part 63, Subpart A, means the maximum capacity of a stationary source to emit a pollutant under its physical and operational design. Any physical or operational limitation on the capacity of the stationary source to emit a pollutant, including air pollution equipment and restrictions on hours of operation or on the type or amount of material combusted, stored, or processed, shall be treated as part of its design if the limitation or the effect it would have on emissions is federally enforceable.

For solvent cleaning machines, potential to emit is determined on the basis of the yearly hours of operation, the working-mode uncontrolled emission rate, and the solvent/air interface area. Unless otherwise restricted by a federally enforceable requirement, the hours of operation must be based on the total number of hours in a year (8,760 hours). A facility's total potential to emit is the sum of the HAP emissions from all solvent cleaning operations, plus all HAP emissions from other sources within the facility.

Primary cleaning time means the amount of time it takes a part to reach the vapor zone temperature.

Primary condenser means a series of circumferential cooling coils on a vapor cleaning machine through which chilled liquid or gas is circulated or recirculated to provide continuous condensation of rising solvent vapors and, thereby, create a controlled vapor zone.

Reconstruction, as defined in 40 CFR Part 63, Subpart A, means the replacement of components of an affected or a previously unaffected stationary source to such an extent that:

(1) The fixed capital cost of the new components exceeds 50 percent of the fixed capital cost that would be required to construct a comparable new source; and

(2) It is technologically and economically feasible for the reconstructed source to meet the relevant standard(s) established by the Administrator (or a State) pursuant to Section 112 of the Act. Upon reconstruction, an affected source, or a stationary source that becomes an affected source, is subject to relevant standards for new sources, including compliance dates, irrespective of any change in emissions of hazardous air pollutants from that source.

Reduced room draft means decreasing the flow or movement of air across the top of the freeboard area of the solvent cleaning machine to less than or equal to 15.2 meters per minute (50 feet per minute). Methods of achieving a reduced room draft include, but are not limited to, redirecting fans and/or air vents so that they do not blow across the cleaning machine, moving the cleaning machine to a corner where there is less room draft, and constructing a partial or complete enclosure around the cleaning machine.

Solvent fill line means the line, typically on the interior of a solvent cleaning machine sump, that indicates the level to which the cleaning machine should be filled with solvent (established before parts are added).

Solvent-air interface means for a vapor cleaning machine, the location of contact between the concentrated solvent vapor layer and the air. This location of contact is defined as the midline height of the primary condenser coils. For a cold cleaning machine, it is the location of contact between the liquid solvent and the air.

Solvent-air interface area for a vapor cleaning machine, means the surface area of the solvent vapor zone that is exposed to the air. For an in-line cleaning machine, it is the total surface area of all the sumps; for a cold cleaning machine, it is the surface area of the liquid solvent that is exposed to the air.

Solvent vapor zone for a vapor cleaning machine, means the area that extends from the liquid solvent surface to the level at which the solvent vapor is condensed. This level is defined as the midline height of the primary condenser coils.

Sump means the part of a solvent cleaning machine where the liquid solvent is located.

Super-heated vapor system (SHV) means a system that heats the solvent vapor, either passively or actively, to at least 10°F (5°C) above the solvent's boiling point. Parts are held in the super-heated vapor before exiting the machine to evaporate the liquid solvent on them. Hot vapor recycle is an example of a SHV system. The following is the minimum temperature that a SHV system much achieve in the super-heated vapro zone for the solvents covered by the rule.

Solvent	Boiling Point (°F)	Maximum Allowed Air Blanket Temperature	
		°F	°C
Methylene Chloride	104	114	46
Trichloroethylene	189	199	93
1,1,1,-Trichloroethane	165	175	79
Chloroform	143	153	67
Carbon Tetrachloride	168	178	81
Perchloroethylene	250	260	127

Water cover for a cold cleaning machine, means a layer of water that floats above denser solvent and provides control of solvent emissions. If the solvent used is not denser than water, a water layer (water cover) will not float above your cleaning solvent and will not control solvent emissions. In many cases the solvent used in batch cold cleaning machines is sold containing the appropriate amount of water to create a water cover. The water cover must be 2.5 cm (1 in) thick to comply with this option of the rule.

Working-mode means the time period when the solvent cleaning machine is actively cleaning parts.

Working-mode cover means any cover or solvent cleaning machine design that allows the cover to shield the cleaning machine openings from outside air disturbances during the working mode (i.e., while parts are in the cleaning machine) and during the idling and downtime modes. A working-mode cover is opened only during parts entry and removal. A cover that meets this definition can also be used as an idling-mode cover if that definition is also met.

APPENDIX B

Checklist

B.1 Applicability Checklist
B.2 Batch Vapor or In-Line (Vapor or Cold) Machines Checklist
B.3 Batch Cold-Cleaning Machines Checklist

B.1 Applicability Checklist

APPLICABILITY CHECKLIST
Halogenated Solvent Cleaning NESHAP

NOTE: This checklist will help determine whether a solvent cleaning machine/degreaser is subject to the Halogenated Solvent cleaning NESHAP.

1. GENERAL INFORMATION

A. Date of Inspection: _____

B. Facility Name: _____

C. Facility Address: _____

D. Facility Contact:

(Name, Title, and Phone) _____

E. Is the facility a major or area source? Major ☐ Area ☐

F. Inspector(s):

Name	Title/Affiliation	Phone Number

2. MACHINE AND SOLVENT IDENTIFICATION

A. Solvent Cleaning Machine Identification Number _____

B. Solvent Cleaning Machine Location (within facility) _____

C. Is the machine a solvent cleaning machine as defined by the rule?

(see below) Yes ☐ No ☐

(If no, do not proceed, this rule does not apply to this machine.)

- A solvent cleaning machine is anything that holds solvent (greater than 2 gallons or 7.6 liters) into which parts are placed to be cleaned. If the unit is less than 2 gallons, it is only subject to this rule if it is specifically designed to clean parts (i.e., an open bucket that has a capacity of less than 2 gallons is *not* a solvent cleaning machine.).

- Almost anything can be considered a "part." If things are put into the unit to be to be cleaned, it is likely a solvent cleaning machine.

  - Wipe cleaning activities (e.g., using a rag) or a spray cleaner containing halogenated solvents are not subject to the rule.

D. Does the machine use one of the following halogenated solvents (the solvent must contain at least 5 percent, in total, of the following HAP solvents)?

		Yes	No
perchlorethylene	(CAS No. 127-18-4)	☐	☐
1,1,1-trichloroethane	(CAS No. 71-55-6)	☐	☐
trichlorethylene	(CAS No. 79-01-6)	☐	☐
methylene chloride	(CAS No. 75-09-2)	☐	☐
carbon tetrachloride	(CAS No. 56-23-5)	☐	☐
chloroform	(CAS No. 67-66-3)	☐	☐

(If you answered no to all, do not proceed, this rule does not apply to this machine.)

E. Is the machine a new source or existing source?

Installed or constructed after 11/29/93	New	☐
Installed or constructed on or before 11/29/93	Existing	☐

[Note: Moving a machine from one location to another within the facility does not make it a new source.]

F. What is the type of the cleaning machine?

Batch Vapor ☐
In-line Vapor ☐
In-line Cold ☐
Batch Cold ☐

(Go to the appropriate compliance checklist for this machine type.)

3. **INSPECTOR COMMENTS:**

_____

_____

_____

_____

_____

_____

_____

_____

END OF FORM

B.2 Batch Vapor or In-Line (Vapor or Cold) Machines Checklist

COMPLIANCE CHECKLIST FOR
BATCH VAPOR OR IN-LINE MACHINES
Halogenated Solvent Cleaning NESHAP

NOTE: This checklist will help determine whether a batch vapor or in-line (cold or vapor) machine is in compliance with the Halogenated Solvent Cleaning NESHAP.

1. GENERAL INFORMATION

A. Cleaning machine ID No.: _____

B. Installation Date: _____

C. Machine is: New ☐ Existing ☐

2. MACHINE SIZE

Indicate the machine size based on whether the machine has a solvent-air interface.

A. **Solvent-air interface area:** _____ m^2 or ft^2

(Equal to the surface area of all cleaning sumps. $\Sigma (L_i \times W_i)$ = solvent-air interface)

OR if no solvent-air interface area

B. **Cleaning Capacity:** _____ m^3 or ft^3

(Equal to the product of internal width, length and depth of the tank. IW x IL x D = cleaning capacity)

3. COMPLIANCE OPTION

Mark the compliance option chosen by owner/operator, and complete the checklist sections indicated for this option.

A. Base design + work practices + *control combination* ☐

Complete sections 4, 5, 8 and 9

B. Base design + work practices + *idling emission limit* ☐

Complete Sections 4, 6, 8 and 9

C. Alternate standard (i.e., *overall emission limit*) ☐

[Note: This is the only option available for machines with no solvent-air interface.]

Complete Sections 7, 8 and 9

4. BASE DESIGN AND WORK PRACTICE REQUIREMENTS

Complete the tables below by filling in any required measurements, calculations, or observations, and check either "Yes" or "No" to document compliance.

A. Base Design Requirements:

The solvent cleaning machine must meet all criteria in the table to be in compliance.

Citation	Base Design Parameter	Measurement, Calculation, or Observation	In Compliance?	
			Yes	No
Compliance §63.463(a)(1)(i) §63.463(d)(1)(i) §63.463(e)(2)(iv) **Monitoring** §63.466(b)(1) **OR**	Machine idling and downtime cover is tightly fitting; free of holes cracks, or other defects; and is in place when parts are not in the machine.[4] Cover is inspected *monthly* to ensure it is free of holes, cracks, or other defects.[5]	Monitoring frequency: _____		
Compliance §63.463(a)(1)(ii), §63.463(e)(2)(ii)(A) **Monitoring** §63.466(d) **Compliance** §63.463(e)(2)(ii)(B)	Room draft not exceeding 15.2 m/min (50 ft/min)[2]. Room draft is monitored according to §63.466(d). Owner/operator established and maintains the operating conditions of testing.[1]	Average wind speed: _____ Room parameters or enclosure used?: _____ Monitoring frequency: _____		
Compliance §63.463(a)(2)	Machine has a freeboard ratio of 0.75 or greater. Calculate by dividing freeboard height by the smallest interior freeboard width.	Freeboard ratio: _____ Freeboard height: _____ Interior width: _____		

[4] Exceedance has occurred if this requirement has not been met and is not corrected within 15 days of detection (§63.463(e)(3)(ii)).

[5] Exceedance has occurred if this requirement has not been met (§63.463(e)(3)(i)).

A. Base Design Requirements (Continued):

Citation	Base Design Parameter	Measurement, Calculation, or Observation	In Compliance?	
			Yes	No
Compliance §63.463(a)(3) **Monitoring** §63.466(c)	Machine has an automated handling system, and it moves at a speed of 3.4 m/min (11 ft/min) or less. Determine hoist speed *monthly* (quarterly if no exceedances for year or otherwise approved by Administrator) by taking the distance and dividing by rate.	Handling speed: _____ Distance: _____ (m) Rate: _____ (min) Monitoring frequency: _____		
Compliance §63.463(a)(4)	Liquid level indicators to shut off sump heat are present and functioning for vapor machines.			
Compliance §63.463(a)(5)	Vapor level indicators to shut off sump heat are present and functioning for vapor machines.			
Compliance §63.463(a)(6)	Primary condenser present and functioning.			
Compliance §63.463(a)(7) **Monitoring** §63.466(e)(2)(vii)	Lip exhaust carbon adsorber (if applicable) exhaust must not exceed 100 ppm halogenated solvent. Carbon adsorber bed is not bypassed during desorption. Lip exhaust is above the cover.	Outlet concentration: _____ Solvent sampled: _____		

B. Work Practice Requirements:

The solvent cleaning machine must meet all criteria in the table to be in compliance.

Citation	Work Practice Requirement	Observation	In Compliance?	
			Yes	No
Compliance §63.463(d)(1)(i) §63.463(d)(1)(ii)	Control air disturbances across cleaning machine openings by (check one): ❑ Keeping cover(s) in place during idling and downtime or ❑ Room draft reduction			
Compliance §63.463(d)(2)	For open-top machines, ensure that parts or parts baskets do not occupy more than 50% of the solvent-air interface area, or introduce the parts or baskets at a speed of 0.9 m/min (3 ft/min) or less.	Solvent-air interface area: _____ Handling speed: _____ Distance: _____ Rate: _____		
Compliance §63.463(d)(3)	Perform all spraying operations within the vapor zone or within a section of the machine that is not directly exposed to ambient air.			
Compliance §63.463(d)(4)	Orient parts so that the solvent drains from them freely.			
Compliance §63.463(d)(5)	Remove parts or baskets only after dripping has stopped.			
Compliance §63.463(d)(6)	When starting up, turn on the primary condenser before the sump heater.			
Compliance §63.463(d)(7)	When shutting down, turn off sump heater before the primary condenser.			
Compliance §63.463(d)(8)	Add or drain solvent using threaded or other leak-proof couplings, and ensure that the end of the pipe or hose introducing solvent is located beneath the liquid solvent surface.			
Compliance §63.463(d)(9)	Maintain equipment as recommended by manufacturer or using approved alternate maintenance practices.			

B. Work Practice Requirements:

Citation	Work Practice Requirement	Observation	In Compliance?	
			Yes	No
Compliance §63.463(d)(10)	Operators must complete and pass applicable sections of the Test of Solvent Cleaning Procedures (Appendix B of Part 63, Subpart T) if asked to do so by the inspector.			
Compliance §63.463(d)(11)	Collect and store waste solvent, still bottoms, and sump bottoms in closed containers.			
Compliance §63.463(d)(12)	Do not clean absorbent materials, such as sponges, fabric, wood, and paper, in the machine.			

5. CONTROL COMBINATIONS

A. Options for Batch Vapor Machines

Circle the Control Combination number in the table below that applies to this machine (§63.463(c)(1)-(2)). Then complete the compliance inspection information in the referenced sections.

Batch Vapor Cleaning Machine Size	Control Combination (circle the number that applies)	Control and Checklist Section to Complete:						
		Working Mode Cover	1.0 Freeboard Ratio	Super Heated Vapor	Freeboard Refrigeration	Reduced Room Draft	Carbon	Dwell
		C.1	C.2	C.3	C.4	C.5	C.6	C.7
Solvent-air Interface Area Less than or equal to 1.21 m^2 (13 ft^2) [§63.463(b)(1)(i)]	1	√	√	√				
	2			√	√			
	3	√			√			
	4		√	√		√		
	5				√	√		
	6		√		√			
	7				√			√
	8		√			√		√
	9				√		√	
	10		√	√			√	
Solvent-air Interface Area Greater than 1.21 m^2 (13 ft^2) [§63.463(b)(2)(i)]	1		√	√	√			
	2				√	√		√
	3	√		√	√			
	4		√	√		√		
	5			√	√	√		
	6		√		√	√		
	7			√	√		√	

B. Options for In-line Machines

Circle the Control Combination number in the table below that applies to this machine (§63.463(c)(1)-(2)). Then complete the compliance inspection information in the sections for the applicable controls following this table and check either "Yes" or "No" to document compliance.

In-Line Cleaning Machine Type	Control Combination (circle the number that applies)	Control and Checklist Section to Complete:				
		1.0 Freeboard Ratio	Super Heated Vapor	Freeboard Refrigeration	Carbon Adsorber	Dwell
		C.2	C.3	C.4	C.6	C.7
Existing Machines [§63.463(c)(1)(i)]	1	√	√			
	2	√		√		
	3			√		√
	4				√	√
New Machines [§63.463(c)(2)(i)]	1		√	√		
	2			√	√	
	3		√		√	

C. Control Combination Requirements

C.1 Working Mode Cover

Citation	Working Mode Cover Parameter	Measurement, Calculation, or Observation	In Compliance?	
			Yes	No
Compliance §63.463(e)(2)(iii)(A)	Cover opens only during parts entry and removal and completely covers machine openings when closed.			
Compliance §63.463(e)(2)(iii)(B)	Cover is maintained free of cracks, holes, and other defects.			
Monitoring §63.466(b)(1)	Cover is inspected *monthly* to ensure it is free of holes, cracks, or other defects.			

C.2 Freeboard Ratio of 1.0

Citation	Freeboard Ratio Parameter	Measurement, Calculation, or Observation	In Compliance?	
			Yes	No
Compliance §63.463(c)(1)(i) §63.463(c)(2)(i)	Machine has a freeboard ratio of 1.0 or greater. Calculate by dividing freeboard height by the smallest interior freeboard width.	Freeboard ratio: _____ Freeboard height: _____ Interior width:		

C.3. Superheated Vapor

Citation	Superheated Vapor Parameter	Measurement, Calculation, or Observation	In Compliance?	
			Yes	No
Compliance §63.463(e)(2)(vi)(A)	Solvent vapor at the center of the superheated vapor zone must be heated to at least 10°F above the solvent boiling point (BP)[6].	Temperature: _____ Solvent BP: _____ Temp. difference: _____		
Compliance §63.463(e)(2)(vi)(B)	Manufacturers specifications for determining proper dwell time are followed[7].	Specification: _____ Dwell time: _____		
Compliance §63.463(e)(2)(vi)(C)	Parts must remain in the superheated vapor zone for minimum proper dwell time[4].			
Monitoring §63.466(a)(2)	The temperature at the center of the superheated vapor zone must be measured and recorded *weekly* while the machine is idling (retain the records for 5 years).			

[6]Exceedance has occurred if this requirement has not been met and are not corrected within 15 days of detection (§63.463(e)(3)(ii)).

[7]Exceedance has occurred if this requirement has not been met (§63.463(e)(3)(i)).

C.4 Freeboard Refrigeration

Citation	Freeboard Refrigeration Parameter	Measurement, Calculation, or Observation	In Compliance?	
			Yes	No
Compliance §63.463(e)(2)(i)	Air in the freeboard must be at a temperature no greater than 30 percent of the solvent boiling point (in °F)[3].	Solvent BP (°F) : _____ Temp (°F): _____ Temp. As % of BP: _____		
Monitoring §63.466(a)(i)	The air blanket temperature above the vapor zone must be measured and recorded *weekly* while the machine is idling (retain the records for 5 years).			

C.5 Reduced Room Draft

Citation	Reduced Room Draft Parameter	Measurement, Calculation, or Observation	In Compliance?	
			Yes	No
Compliance §63.463(e)(2)(ii)(A)	The average windspeed in the room or enclosure is less than or equal to 15.2 m/min (50 ft/min).	Average windspeed: _____		
Compliance §63.463(e)(2)(ii)(B)	Owner/operator established and maintains the operating conditions of testing.			
Monitoring (room parameters) §63.466(d)(1)	Windspeed is measured and recorded *quarterly*. Room conditions established during testing are monitored *weekly*.			
Monitoring (enclosure) §63.466(d)(2)	Windspeed is measured and recorded *monthly*. Enclosure conditions is monitored *monthly*.			

[3]Exceedance has occurred if this requirement has not been met and are not corrected within 15 days of detection (§63.463(e)(3)(ii)).

C.6 Carbon Adsorber (with Lip Exhaust)

Citation	Carbon Adsorber Parameter	Measurement, Calculation, or Observation	In Compliance?	
			Yes	No
Compliance §63.463(e)(2)(vii)(A)	Halogenated solvent concentration in the exhaust does not exceed 100 ppm using colorimetric detector tube.[5]	Concentration: _____ Solvent tested: _____		
Compliance §63.463(e)(2)(vii)(B)	The carbon bed cannot be bypassed during desorption.[6]			
Compliance §63.463(e)(2)(vii)(C)	The lip exhaust must be located above the cover.[6]			
Monitoring and Recordkeeping §63.466(e) §63.467(b)(4)	The exhaust concentration of the halogenated solvent must be measured and recorded *weekly*. (retain the records for 5 years).			

[5]Exceedance has occurred if this requirement has not been met and are not corrected within 15 days of detection (§63.463(e)(3)(ii)).

[6]Exceedance has occurred if this requirement has not been met (§63.463(e)(3)(i))

C.7 **Dwell**

Citation	Dwell Parameters	Measurement, Calculation, or Observation	In Compliance?	
			Yes	No
Compliance §63.463(e)(2)(v)(A)	Determine the proper or maximum dwell time for each type of part or parts basket to be cleaned.[6]	Proper dwell time recorded (sec) _____		
Compliance §63.463(e)(2)(v)(B)	Ensure that parts are held in the freeboard area above the vapor zone for the proper dwell time.[6]			
Test Methods §63.465(d)(1)	Determine the amount of time for the parts to cease dripping once placed in the vapor zone.	Actual measured dwell time (sec) _____		
Test Methods §63.465(d)(2)	Proper dwell time for parts to remain in the freeboard area above the vapor zone is no less than 35% of the actual dwell time.	% of actual dwell time: _____		
Monitoring §63.466(b)(2)	Actual dwell time must be measured and recorded *monthly.*			
Recordkeeping §63.467(a)(3)	Retain records of the tests to determine proper dwell time for the lifetime of the machine.			

[6]Exceedance has occurred if this requirement has not been met (§63.463(e)(3)(i))

6. IDLING EMISSION LIMIT

Complete the tables below by filling in any required measurements, calculations, or observations, and check either "Yes" or "No" to document compliance.

Citation	Idling Parameters	Measurement, Calculation, or Observation	In Compliance?	
			Yes	No
Compliance (batch vapor) §63.463(f)(1)(i) §63.463(b)(1)(ii) §63.463(b)(2)(ii)	Demonstrate that the *batch vapor* machine can meet an emission limit of 0.22 kg/hr-m^2 (0.045 lbs/hr-ft^2) of solvent-air interface area when idling.[7]			
Compliance (in-line) §63.463(f)(1)(i) §63.463(c)(1)(ii) §63.463(c)(2)(ii)	Demonstrate that the *in-line* machine can meet an emission limit of 0.10 kg/hr-m^2 (0.021 lbs/hr-ft^2) of solvent-air interface area when idling.[7]			
Test Methods §63.465(a)	Determine idling emission rate using Reference Method 307 (in Appendix A of Subpart T).			
Compliance §63.463(f)(1)(ii)	Establish operating parameters to demonstrate compliance. For example, if a control from the Control Combination section of the rule was used, the requirements for that control must be followed.[7]	Periodic monitoring of parameters selected: _____ Parameters machine is operated within: _____		
Compliance §63.463(f)(2)	Conduct periodic monitoring to demonstrate compliance.[7]	Frequency of monitoring performed: _____ Type of monitoring: _____		

[7]Exceedance has occurred if this requirement has not been met. Determine if exceedance of parameters are classified as an immediate exceedance or whether a 15-day repair period would be allowed (§63.463(f)(4)(i)-(ii)).

6. IDLING EMISSION LIMIT (Continued)

Citation	Idling Parameters	Measurement, Calculation, or Observation	In Compliance?	
			Yes	No
Compliance §63.463(f)(3)	Operate machine within parameters identified in the initial performance test.[8]			
Recordkeeping §63.467(a)(4)	Retain the results of the initial test, including the idling emission rate and values of monitoring parameters measured, for the life of the machine.			
Monitoring §63.466(f)	If using a control from the Control Combinations list, monitoring requirements for that control must be followed <u>or</u> alternative monitoring must be approved by the Administrator			

[8]Exceedance has occurred if this requirement has not been met. Determine if exceedance of parameters are classified as an immediate exceedance or whether a 15-day repair period would be allowed (§63.463(f)(4)).

7. ALTERNATIVE STANDARD (Overall Emission Limit)

Complete one of the sections below based on whether the machine being inspected has a solvent-air interface. Check "Yes" or "No" to document compliance.

A. Machines with Solvent-air Interface

NOTE: For machines with solvent-air interface areas, compliance requirements depend on machine type and whether the machine is existing or new.

Citation	Solvent-air Interface Alternative Standard Parameters	Measurement, Calculation, or Observation	In Compliance?	
			Yes	No
Compliance §63.464(a)(1)(ii)	For a ***batch vapor machine,*** the 3-month rolling average emissions of listed solvent from the machine, calculated monthly, must not exceed 150 kg/m^2-month (30.7 lbs/ft^2-month).[9]	Rolling Average: _____		
Compliance §63.464(a)(1)(ii)	For an ***existing in-line machine,*** the 3-month rolling average emissions of listed solvent from the machine, calculated monthly, must not exceed 153 kg/m^2-month (31.4 lbs/ft^2-month).[10]	Rolling average: _____		
Compliance §63.464(a)(1)(ii)	For a ***new in-line machine***, the 3-month rolling average emissions of listed solvent from the machine, calculated monthly, must not exceed 99 kg/m^2 -month (20 lbs/ft^2 month).[11]	Rolling average: _____		

[9]Exceedance has occurred if this the 3-month rolling average emission limit has not been met(§63.464(c)).

[10]Exceedance has occurred if this the 3-month rolling average emission limit has not been met(§63.464(c)).

[11]Exceedance has occurred if this the 3-month rolling average emission limit has not been met(§63.464(c)).

A. Machines with Solvent-air Interface (Continued)

Citation	Solvent-air Interface Alternative Standard Parameters	Measurement, Calculation, or Observation	In Compliance?	
			Yes	No
Compliance §63.464(a)(1)(i) **Recordkeeping** §63.467(c)(1)-(2)	Maintain records (dates and amounts) of solvent added to the machine and solvent and waste removed from the machine (retain records for 5 years).			
Compliance §63.464(b) **Recordkeeping** §63.467(c)(3)	Maintain records of calculations of monthly and 3-month rolling average emissions on a monthly basis (retain records for 5 years).			
Test Methods §63.465(b)	On the first day of every month, ensure that the machine contains only clean solvent.			
Test Methods §63.465(b)	Return the solvent each month to the fill line established during the first month the measurements were made.			
Test Methods §63.465(c)	Determine solvent emissions on the first operating day of each month.			

B. Machines without Solvent-air Interface

NOTE: For machines without solvent-air interface areas, compliance requirements depend on the cleaning capacity of the machine.

Citation	Alternative Standard Parameters (No Solvent-air Interface)	Measurement, Calculation, or Observation	In Compliance?	
			Yes	No
Compliance §63.464(a)(2)(ii)(A)	For machines with a ***cleaning capacity less than or equal to 2.95 m³***, the monthly emissions must not exceed the emission limited determined using use either Table 6 or Equation 1 of 40 CFR 63.464.[12]	Monthly emissions: _____ Emission limit determined by: _____		
Compliance §63.464(a)(2)(ii)(B)	For machines with a ***cleaning capacity greater than 2.95 m³***, the monthly emissions must not exceed the emission limit determined using Equation 1 of 40 CFR 63.464.[11]	Monthly emissions: _____		
Compliance §63.464(a)(1)(i) **Recordkeeping** §63.467(c)(1)-(2)	Maintain records (dates and amounts) of solvent added to the machine and solvent and waste removed from the machine (retain records for 5 years).			
Compliance §63.464(b) **Recordkeeping** §63.467(c)(3)	Maintain records of calculations of monthly and 3-month rolling average emissions on a monthly basis (retain records for 5 years).			
Test Methods §63.465(b)	On the first day of every month, ensure that the machine contains only clean solvent.			
Test Methods §63.465(b)	Return the solvent each month to the fill line established during the first month the measurements were made.			
Test Methods §63.465(c)	Determine solvent emissions the first operating day of each month.			
Recordkeeping §63.467(d).	Maintain records on the method used to determine cleaning capacity (retain for 5 years).			

[12]Exceedance has occurred if this the 3-month rolling average emission limit has not been met (§63.464(c)).

8. GENERAL TESTING AND RECORD KEEPING REQUIREMENTS

A. Potential to Emit

Determine the potential to emit from **all** solvent cleaning operations at the facility (§63.465(e)).

Potential to emit (kg/yr) _____

{PTE_i = (annual hours of operation)$_i$ x (working mode emission rate, kg/m^2-hr)$_i$ x (SAI, m^2)$_i$; SAI = 2.20 x (Vol, m^3)$^{0.6}$ for machines with no solvent-air interface; SAI = solvent-air interface area, Vol = cleaning capacity}

Permit limit (kg/yr) _____ (if applicable)

B. Records Retained For Lifetime of Machine

Are the following maintained by the owner/operator?:

- Owner's manual or written maintenance and operating procedures for the solvent cleaning machine and control equipment (§63.467(a)(1)):

Yes ☐ No ☐ Comment: _____

- The date of installation for the solvent cleaning machine and all control devices. (If exact date is unknown, a letter certifying that the machine and controls were installed prior to, on, or after 11/29/93 can be substituted) (§63.467(a)(2)):

Yes ☐ No ☐ Comment: _____

- Halogenated HAP solvent content for each listed solvent used in the machine (§63.467(a)(5)):

Yes ☐ No ☐ Comment: _____

C. Records Retained For 5 Years

Does the owner/operators using control combination or idling emission limit, maintain estimates of annual solvent consumption for the machine (§63.467(b)(3)):

Yes ☐ No ☐ Comment: _____

9. REPORTING REQUIREMENTS

For:	Complying with:	Complete:
New machines	Control combination or idling emission limit	(A) and (C)
New machines	Overall emission limit (i.e., alternative standard)	(A) and (D)
Existing machines	Control combination or idling emission limit	(B) and (C)
Existing machines	Overall emission limit (i.e., alternative standard)	(B) and (D)

A. Initial Notification Requirements for New Machines:

Notification Type/ Citation	New Machine Reporting Parameters	Observation/ Date	In Compliance?	
			Yes	No
Initial Notification §63.468(b)	If construction or reconstruction had commenced but initial startup had not occurred before 12/2/94, an *initial notification report* was submitted before startup, but no later than 1/31/95.	Construction:_____ Startup: _____ Notification:_____		
Initial Notification §63.468(b)	If construction or reconstruction began or will begin after 12/2/94, an *initial notification report* has been submitted as soon as possible before starting construction or reconstruction of the machine.	Construction:_____ Startup: _____ Notification:_____		

Does the ***initial notification report*** for the new machine comprise the following (§63.468(b)(1)-(3)):

- Description of machine, including type, solvent-air interface area and existing controls: Yes ☐ No ☐
- Anticipated compliance approach: Yes ☐ No ☐
- Estimate of annual halogenated solvent consumption for each cleaning machine: Yes ☐ No ☐

B. Initial Notification Requirements for Existing Machines:

Initial notification for existing machines are based on a fixed date. Complete the table below by checking either "Yes" or "No" to document compliance.

Notification Type/ Citation	Existing Machine Reporting Parameter	Observation/ Date	In Compliance?	
			Yes	No
Initial Notification §63.468(a)	An *initial notification* report was submitted no later than 8/29/95.	Notification:_____		

Did the ***initial notification report*** for existing sources comprise the following (§63.468(a)(1)-(6)):

- Owner/operator name and address: Yes ☐ No ☐
- Address (i.e., physical location of machine): Yes ☐ No ☐
- Description of machine, including type, solvent-air interface area and existing controls: Yes ☐ No ☐
- Installation date of the machine or letter certifying installation before or after 11/29/93: Yes ☐ No ☐
- Anticipated compliance approach: Yes ☐ No ☐
- Estimate of annual halogenated solvent consumption: Yes ☐ No ☐

C. Reporting Requirements with Control Combinations and Idling Emission Limit

Notification Type/ Citation	Control and Idling Emission Reporting Parameter	Observation/ Date	In Compliance?	
			Yes	No
Initial Statement of Compliance (New) §63.468(d)	For new sources, an *initial statement of compliance* has been submitted no later than 150 days after startup or 5/1/95, whichever is later.	Notification:_____		
Initial Statement of Compliance (Existing) §63.468(d)	For existing sources, an *initial statement of compliance* has been submitted no later than May 1, 1998 (150 days after 12/2/97).	Notification:_____		
Annual Report §63.468(f)	An *annual report* must be submitted by February 1 of the year following the one for which the report is being made.			
Exceedance Report §63.468(h)	An *exceedance report* must be submitted semiannually unless it is determined that more frequent reporting is necessary to accurately assess compliance status.	Reporting frequency: _____		

Does the ***initial statement of compliance*** comprise the following (§63.468(d)(1)-(7)):

- Owner/operator name and address: Yes ☐ No ☐
- Address (i.e., physical location) of the machine: Yes ☐ No ☐
- List of parameters monitored for each control and the values measured on or during the first month after the compliance date: Yes ☐ No ☐
- List of control equipment used to achieve compliance: Yes ☐ No ☐
- Conditions to maintain wind speed requirements, if applicable: Yes ☐ No ☐
- A test report on tests of idling emissions meeting the specifications in Reference Method 307 and complying with the requirements of §63.468(d)(6)(i) through §63.468(d)(6)(iv), if applicable: Yes ☐ No ☐
- Date and results of the weekly measurement of the halogenated HAP solvent concentration in the carbon adsorber exhaust, if applicable: Yes ☐ No ☐

Do the ***annual reports*** comprise the following (§63.468(f)(1)-(2)):

- A signed statement from the facility owner or the owner's designee stating that, "All operators of solvent cleaning machines have received training on the proper operation of solvent cleaning machines and their control devices sufficient to pass the test required in §63.643(d)(10).": Yes ☐ No ☐
- An estimate of solvent consumption for each solvent cleaning machine during the reporting period: Yes ☐ No ☐

Do the ***exceedance reports*** comprise the following (§63.468(h)(1)-(3)):

- Records of written or verbal orders for replacement parts, a description of repairs to be made, and additional monitoring conducted to demonstrate that monitored values have returned to accepted levels: Yes ☐ No ☐
- If an exceedance has occurred, the reason for the exceedance and a description of the actions taken: Yes ☐ No ☐
- If no exceedance of a parameter has occurred, or a piece of equipment has not been inoperative, out of control, repaired or adjusted, a statement to this effect: Yes ☐ No ☐

D. Reporting Requirements with Overall Emission Limit (i.e., Alternative Standard)

Notification Type/ Citation	Overall Emission Limit Reporting Parameter	Observation/ Date	In Compliance?	
			Yes	No
Initial Statement of Compliance §63.468(e)	For new sources, an *initial statement of compliance* has been submitted no later than 150 days after startup or 5/1/95, whichever is later.	Notification:_____		
Initial Statement of Compliance §63.468(e)	For existing sources, an *initial statement of compliance* has been submitted no later than May 1, 1998 (150 days after 12/2/97).	Notification:_____		
Solvent Emission Report §63.468(g)	A *solvent emission report* must be submitted every year.	Annual report: _____		
Exceedance Report §63.468(h)	An *exceedance report* must be submitted semiannually unless it is determined that more frequent reporting is necessary to accurately assess compliance status.	Reporting frequency: _____		

Does the ***initial statement of compliance*** comprise the following(§63.468(e)(1)-(4)):

- Owner/operator name and address: Yes ☐ No ☐
- Address (i.e., physical location) of the machine: Yes ☐ No ☐
- Solvent-air interface area, or for machines without solvent-air interface, a description of the method used to determine cleaning capacity: Yes ☐ No ☐
- Results of the first 3-month average emission calculations: Yes ☐ No ☐

Do the ***solvent emission reports*** comprise the following (§63.468(g)(1)-(3)):

- Type and size of each unit subject to this NESHAP: Yes ☐ No ☐
- Average monthly solvent consumption in kilograms/month: Yes ☐ No ☐
- The 3-month rolling average solvent emission estimates calculated each month: Yes ☐ No ☐

[Note: Reporting requirements under §63.468(f) and (g) can be combined into one report.]

Do the ***exceedance reports*** comprise the following (§63.468(h)(1)-(3)):

- Records of written or verbal orders for replacement parts, a description of repairs to be made, and additional monitoring conducted to demonstrate that monitored values have returned to accepted levels: Yes ☐ No ☐
- If an exceedance has occurred, the reason for the exceedance and a description of the actions taken: Yes ☐ No ☐
- If no exceedance of a parameter has occurred, or a piece of equipment has not been inoperative, out of control, repaired or adjusted, a statement to this effect: Yes ☐ No ☐

9. INSPECTOR COMMENTS:

_____
_____
_____
_____
_____
_____
_____
_____
_____
_____
_____
_____
_____
_____
_____

END OF FORM

B3. Batch Cold-Cleaning Machines Checklist

COMPLIANCE CHECKLIST FOR
BATCH COLD-CLEANING MACHINES
Halogenated Solvent Cleaning NESHAP

1. GENERAL INFORMATION:

A. Cleaning machine ID No.: _____

B. Machine is: New ☐ Existing ☐

C. Machine type is: Immersion ☐ Remote Reservoir ☐

(go to Section 2.A) (go to Section 2.B)

2. COMPLIANCE REQUIREMENTS BASED ON MACHINE TYPE:

A. Immersion Machine:

The machine employs a tightly fitting cover that is closed at all times except during parts entry and removal, *and* a water layer at a thickness of 2.5 cm (1 in.) on the surface of the solvent within the cleaning machine. [§63.462(a)(1)]

In compliance?: Yes ☐ No ☐ Not Applicable ☐

[Note: If the owner/operator has chosen and is in compliance with this option, complete Section 4 (for new machines) *or* 5 (for existing machines) only.]

OR

The machine employs a tightly fitting cover that is closed at all times except during parts entry and removal, *and* a freeboard ratio of 0.75 of greater. [§63.462(a)(2)]

In compliance?: Yes ☐ No ☐ Not Applicable ☐

[Note: If the owner/operator has chosen and is in compliance with this option, complete Section 3 and either Section 4 (for new machines) *or* 5 (for existing machines).]

B. Remote Reservoir Machine:

The machine employs a tightly fitting cover over the solvent sump that is closed at all times except during the cleaning of parts. [§63.462(b)]

In compliance?: Yes ☐ No ☐

[Complete Section 3 and either Section 4 (for new machines) *or* 5 (for existing machines) .]

3. WORK AND OPERATIONAL PRACTICE REQUIREMENTS:

Citation	Work/Operational Practice	Measurement, Calculation, or Observation	In Compliance?	
			Yes	No
§63.462(c)(1)	All waste solvent is collected and stored in closed containers.			
§63.462(c)(2)	Flushing is only performed in the freeboard area.			
§63.462(c)(3)	Parts are drained for 15 seconds or until dripping has stopped, whichever is longer, and parts with cavities or blind holes are tipped or rotated while draining.			
§63.462(c)(4)	The solvent level does not exceed the fill line.			
§63.462(c)(5)	Spills of solvent during transfer are wiped up immediately, and the wipe rags are stored in a covered container.			
§63.462(c)(6)	When an air- or pump-agitated solvent bath is used, the agitator produces a rolling motion of the solvent but not observable splashing against tank walls or parts being cleaned			

3. WORK AND OPERATIONAL PRACTICE REQUIREMENTS (Continued):

Citation	Work/Operational Practice	Measurement, Calculation, or Observation	In Compliance?	
			Yes	No
§63.462(c)(7)	When the cover is opened, the machine is not exposed to drafts greater than 40 m/min (132 ft/min), as measured between 1-2 m (3.3-6.6 ft) upwind and at the same elevation as the tank lip.	Wind speed: _____		
§63.462(c)(8)	Sponges, fabric, wood, and paper products are not cleaned in the machine.			

4. REPORTING REQUIREMENTS FOR NEW MACHINES:

Initial Notification Report

If construction or reconstruction had commenced but initial startup had not occurred before 12/2/94, an *initial notification report* was submitted before startup, but no later than 1/31/95. [§63.468(b)]

In compliance?: Yes ☐ No ☐ Not Applicable ☐

OR

If construction or reconstruction began or will begin after 12/2/94, an *initial notification report* has been submitted as soon as possible before starting construction or reconstruction of the machine. [§63.468(b)]

In compliance?: Yes ☐ No ☐ Not Applicable ☐

The *initial notification report* comprises the following:

Citation	Initial Notification Report Component	In Compliance?	
		Yes	No
§63.468(b)(1)	Description of machine, including type and existing controls.		
§63.468(b)(2)	Anticipated compliance approach.		
§63.468(b)(3)	Estimate of annual halogenated solvent consumption.		

Compliance Report

A *compliance report* has been submitted no later than 5/1/98, whichever is later. [§63.468(c)]

In compliance?: Yes ☐ No ☐

The *compliance report* comprises:

Citation	Compliance Report Component	In Compliance?	
		Yes	No
§63.468(c)(1)	Owner/operator name and address.		
§63.468(c)(2)	Address (i.e., physical location) of the machine.		
§63.468(c)(3)	A statement signed by the owner/operator stating that the machine is in compliance with this NESHAP.		
§63.468(c)(4)	Compliance Approach.		

5. REPORTING REQUIREMENTS FOR EXISTING MACHINES:

Initial Notification Report

An *initial notification report* was submitted no later than 8/29/95. [§63.468(a)]

In compliance?: Yes ☐ No ☐

The *initial notification report* comprises the following:

Citation	Initial Notification Report Component	In Compliance?	
		Yes	No
§63.468(a)(1)	Owner/operator name and address.		
§63.468(a)(2)	Address (i.e., physical location of machine).		
§63.468(a)(3)	Description of machine, including type and existing controls.		
§63.468(a)(4)	Installation date of the machine or letter certifying installation before or after 11/29/93.		
§63.468(a)(5)	Anticipated compliance approach.		
§63.468(a)(6)	Estimate of annual halogenated solvent consumption.		

Compliance Report

A *compliance report* has been submitted no later than 5/1/98.

In compliance?: Yes ☐ No ☐

The *compliance report* comprises:

Citation	Compliance Report Component	In Compliance?	
		Yes	No
§63.468(c)(1)	Owner/operator name and address.		
§63.468(c)(2)	Address (i.e., physical location) of the machine.		
§63.468(c)(3)	A statement signed by the owner/operator stating that the machine is in compliance with this NESHAP.		
§63.468(c)(4)	Compliance approach.		

Appendix C

Conversion Chart

Appendix C
Conversion Chart

Multiply	By	To Obtain
Centimeters	0.3937	Inches
Cubic centimeters	3.531×10^{-5}	Cubic feet
Cubic centimeters	6.10×10^{-2}	Cubic inches
Cubic centimeters	10^{-6}	Cubic meters
Cubic feet	0.02832	Cubic meters
Cubic inches	5.787×10^{-4}	Cubic feet
Cubic inches	16.39	Cubic centimeters
Cubic meters	10^{6}	Cubic centimeters
Cubic meters	35.31	Cubic feet
Cubic meters	61,023	Cubic inches
Cubic yards	7.646×10^{5}	Cubic centimeters
Cubic yards	27	Cubic feet
Cubic yards	0.7646	Cubic meters
Feet per minute	0.01829	Kilometers per hour
Feet per minute	0.3048	Meters per minute
Gallons	0.1337	Cubic feet
Kilograms	2.2046	Pounds
Kilograms	1.102×10^{-3}	Tons (short)
Kilograms per cubic meter	0.06243	Pounds per cubic foot
Kilograms per cubic meter	3.61×10^{-5}	Pounds per cubic inch
Meters	100	Centimeters
Meters	3.2808	Feet
Meters	39.37	Inches
Meters per minute	1.667	Centimeters per second
Meters per minute	3.281	Feet per minute
Meters per minute	0.05468	Feet per second

Appendix C
Conversion Chart (Continued)

Multiply	By	To Obtain
Meters per second	1968	Feet per minute
Meters per second	3.284	Feet per second
Pounds	453.6	Grams
Pounds	16	Ounces
Pounds	0.4536	Kilograms
Pounds per cubic foot	0.01602	Grams per cubic centimeter
Pounds per cubic foot	16.02	Kilograms per cubic meter
Pounds per cubic foot	5.787×10^{-4}	Pounds per cubic foot
Pounds per cubic foot	1728	Pounds per cubic foot
Pounds per foot	1.488	Kilograms per meter
Pounds per inch	178.6	Grams per centimeter
Pounds per square foot	4.882	Kilograms per square meter
Pounds per square foot	6.944×10^{-3}	Pounds per square inch
Pounds per square inch	703.1	Kilograms per square
Pounds per square inch	144	Pounds per square foot
Square feet	144	Square inches
Square feet	0.09290	Square meters
Square inches	6.452	Square centimeters
Square inches	6.944×10^{-3}	Square feet
Square meters	10.764	Square feet
Square yards	0.8361	Square meters
Yards	91.44	Centimeters
Yards	3	Feet
Yards	36	Inches
Yards	0.9144	Meters

APPENDIX D

Emission Limits For Machines Without a Solvent-Air Interface

Emission Limits for Cleaning Machines Without a Solvent-air Interface

Cleaning capacity (cubic meters[a])	3-Month rolling average monthly emission limit (kilograms/ month[b])	Cleaning capacity (cubic meters[a])	3-Month rolling average monthly emission limit (kilograms/ month[b])	Cleaning capacity (cubic meters[a])	3-Month rolling average monthly emission limit (kilograms/ month[b])
0.00	0	0.90	310	1.80	470
0.05	55	0.95	320	1.85	477
0.10	83	1.00	330	1.90	485
0.15	106	1.05	340	1.95	493
0.20	126	1.10	349	2.00	500
0.25	144	1.15	359	2.05	508
0.30	160	1.20	368	2.10	515
0.35	176	1.25	377	2.15	522
0.40	190	1.30	386	2.20	530
0.45	204	1.35	395	2.25	537
0.50	218	1.40	404	2.30	544
0.55	231	1.45	412	2.35	551
0.60	243	1.50	421	2.40	558
0.65	255	1.55	429	2.45	565
0.70	266	1.60	438	2.50	572
0.75	278	1.65	446	2.55	579
0.80	289	1.70	454	2.60	585
0.85	299	1.75	462	2.65	592
2.70	599	3.60	712	4.50	814
2.75	605	3.65	718	4.55	819
2.80	612	3.70	723	4.60	824
2.85	619	3.75	729	4.65	830
2.90	625	3.80	735	4.70	835
2.95	632	3.85	741	4.75	840
3.00	638	3.90	747	4.80	846

Emission Limits for Cleaning Machines Without a Solvent-air Interface (Continued)

Cleaning capacity (cubic meters[a])	3-Month rolling average monthly emission limit (kilograms/ month[b])	Cleaning capacity (cubic meters[a])	3-Month rolling average monthly emission limit (kilograms/ month[b])	Cleaning capacity (cubic meters[a])	3-Month rolling average monthly emission limit (kilograms/ month[b])
3.05	644	3.95	752	4.85	851
3.10	651	4.00	758	4.90	856
3.15	657	4.05	764	4.95	862
3.20	663	4.10	769	5.00	867
3.25	669	4.15	775	5.05	872
3.30	675	4.20	781	5.10	877
3.35	682	4.25	786	5.15	882
3.40	688	4.30	792	5.20	887
3.45	694	4.35	797	5.25	893
3.50	700	4.40	803	5.30	898
3.55	706	4.45	808	5.35	903
5.40	908	6.30	996	7.20	1079
5.45	913	6.35	1000	7.25	1083
5.50	918	6.40	1005	7.30	1088
5.55	923	6.45	1010	7.35	1092
5.60	928	6.50	1015	7.40	1097
5.65	933	6.55	1019	7.45	1101
5.70	938	6.60	1024	7.50	1105
5.75	943	6.65	1029	7.55	1110
5.80	947	6.70	1033	7.60	1114
5.85	952	6.75	1038	7.65	1119
5.90	957	6.80	1042	7.70	1123
5.95	962	6.85	1047	7.75	1127
6.00	967	6.90	1052	7.80	1132
6.05	972	6.95	1056	7.85	1136

Emission Limits for Cleaning Machines Without a Solvent-air Interface (Continued)

Cleaning capacity (cubic meters[a])	3-Month rolling average monthly emission limit (kilograms/ month[b])	Cleaning capacity (cubic meters[a])	3-Month rolling average monthly emission limit (kilograms/ month[b])	Cleaning capacity (cubic meters[a])	3-Month rolling average monthly emission limit (kilograms/ month[b])
6.10	977	7.00	1061	7.90	1140
6.15	981	7.05	1065	7.95	1145
6.20	986	7.10	1070	8.00	1149
6.25	991	7.15	1074	8.05	1153
8.10	1158	9.00	1233	9.90	1306
8.15	1162	9.05	1237	9.95	1310
8.20	1166	9.10	1241	10.00	1314
8.25	1171	9.15	1246	10.05	1318
8.30	1175	9.20	1250	10.10	1322
8.35	1179	9.25	1254	10.15	1326
8.40	1183	9.30	1258	10.20	1329
8.45	1187	9.35	1262	10.25	1333
8.50	1192	9.40	1266	10.30	1337
8.55	1196	9.45	1270	10.35	1341
8.60	1200	9.50	1274	10.40	1345
8.65	1204	9.55	1278	10.45	1349
8.70	1208	9.60	1282	10.50	1353
8.75	1213	9.65	1286	10.55	1357
8.80	1217	9.70	1290	10.60	1360
8.85	1221	9.75	1294	10.65	1364
8.90	1225	9.80	1298	10.70	1368
8.95	1229	9.85	1302	10.75	1372
10.80	1376	11.20	1406	11.60	1436
10.85	1380	11.25	1410	11.65	1440
10.90	1383	11.30	1414	11.70	1444

Emission Limits for Cleaning Machines Without a Solvent-air Interface (Continued)

Cleaning capacity (cubic meters[a])	3-Month rolling average monthly emission limit (kilograms/ month[b])	Cleaning capacity (cubic meters[a])	3-Month rolling average monthly emission limit (kilograms/ month[b])	Cleaning capacity (cubic meters[a])	3-Month rolling average monthly emission limit (kilograms/ month[b])
10.95	1387	11.35	1417	11.75	1447
11.00	1391	11.40	1421	11.80	1451
11.05	1395	11.45	1425	11.85	1455
11.10	1399	11.50	1429	11.90	1458
11.15	1402	11.55	1432	11.95	1562

[a] Divide cubic feet by 35.31 to obtain the cleaning capacity in cubic meters.
[b] Multiply kilograms/month by 2.2046 to obtain the 3-month rolling average monthly emission limit in pounds/month.

Note: If the cleaning capacity for your machine falls between those presented above, the limit for your machine is the lower emissions limit.