United States
Environmental Protection
Agency

Office of Research and
Development
Washington, DC 20460

EPA/530/SW-91/054
June 1991

EPA

Technical Resource Document

Design, Construction, and Operation of Hazardous and Non-Hazardous Waste Surface Impoundments

EPA/530/SW-91/054
June 1991

TECHNICAL RESOURCE DOCUMENT

DESIGN, CONSTRUCTION, AND OPERATION OF HAZARDOUS AND NON-HAZARDOUS WASTE SURFACE IMPOUNDMENTS

Robert P. Hartley
Cincinnati, OH 45230

EPA Purchase Order No. 1C6081 NATX

Project Officer

Robert E. Landreth
Waste Minimization, Destruction, and
Disposal Research Division
Risk Reduction Engineering Laboratory
Cincinnati,. OH 45268

RISK REDUCTION ENGINEERING LABORATORY
OFFICE OF RESEARCH AND DEVELOPMENT
U.S. ENVIRONMENTAL PROTECTION AGENCY
CINCINNATI, OHIO 45268

U.S. Environmental Protection Agency
Region 5, Library (PL-12J)
77 West Jackson Boulevard, 12th Floor
Chicago, IL 60604-3590

Printed on Recycled Paper

DISCLAIMER

The information in this document has been funded wholly or in part by the United States Environmental Protection Agency under Purchase Order No. 1C6081 NATX to Robert P. Hartley. It has been subjected to the Agency's peer and administrative review, and it has been approved for publication as an EPA document. Mention of trade names or commercial products does not constitute endorsement or recommendation for use.

FOREWORD

Today's rapidly developing and changing technologies and industrial products and practices frequently carry with them the increased generation of solid and hazardous wastes. These materials, if improperly dealt with, can threaten both public health and the environment. Abandoned waste sites and accidental releases of toxic and hazardous substances to the environment also have important environmental and public health implications. The Risk Reduction Engineering Laboratory assists in providing an authoritative and defensible engineering basis for assessing and solving these problems. Its products support the policies, programs and regulations of the Environmental Protection Agency, the permitting and other responsibilities of State and local governments, and the needs of both large and small businesses in handling their wastes responsibly and economically.

This report is a Technical Resource Document, summarizing the state-of-the-art in the design, construction and operation of hazardous waste and non-hazardous waste surface impoundments. Details are generally left to referenced materials. Some of the information, presented in more detail, has not been previously published. Most of the information has been gathered in the course of hazardous waste research, in accord with past regulatory emphasis. However, it is believed that most of the technical information will also be applicable to non-hazardous waste surface impoundments.

E. Timothy Oppelt, Director
Risk Reduction Engineering Laboratory

PREFACE

Subtitle C of the Resource Conservation and Recovery Act (RCRA) requires the U. S. Environmental Protection Agency (EPA) to establish a Federal hazardous waste management program. The program must ensure that hazardous wastes are handled safely from generation until final disposal. EPA issued a series of hazardous waste regulations under Subtitle C of RCRA that are published in Title 40 Code of Federal Regulations (CFR) Parts 260 through 265 and Parts 122 through 124.

Parts 264 and 265 of 40 CFR contain standards applicable to owners/operators of all facilities that treat, store, or dispose of hazardous wastes. Wastes are identified or listed as hazardous under 40 CFR Part 261. Part 264 standards are implemented through permits issued by authorized States or EPA according to 40 CFR Part 122 and Part 124 regulations. Land treatment, storage, and disposal (LTSD) regulations in 40 CFR Part 264 issued on July 26, 1982, and July 15, 1985, establish performance standards for hazardous waste landfills, surface impoundments, land treatment units, and waste piles. Part 265 standards impose minimum technology requirements on the owners/operators of certain landfills and surface impoundments.

EPA is developing three types of documents to assist preparers and reviewers of permit applications for hazardous waste land disposal facilities. These are RCRA Technical Guidance Documents (TGDs), Permit Guidance Manuals (PGMs), and Technical Resource Documents (TRDs). Although emphasis is given to hazardous waste facilities, the information presented in these documents may be used for designing, constructing, and operating non-hazardous waste LTSD facilities as well.

The RCRA TGDs present design, construction, and operating specifications or evaluation techniques that generally comply with or demonstrate compliance with the design and operating requirements and the closure and post-closure requirements of Part 264. The Permit Guidance Manuals are being developed to describe the permit application information the Agency seeks and to provide guidance to applicants and permit writers in addressing information requirements. These manuals will include a discussion of each step in the permitting process and a description of each set of specifications that must be considered for inclusion in the permit.

The TGDs and PGMs present guidance, not regulations. They do not supersede the regulations promulgated under RCRA and published in the CFR. Instead, they provide recommendations, interpretations, suggestions, and references to additional information that may be used to help interpret the requirements of the regulations. The recommendations of methods, procedures, techniques, or specifications in these manuals and documents is not intended to suggest that other alternatives might not satisfy regulatory requirements.

The TRDs present summaries of state-of-the-art technologies and evaluation techniques determined by the Agency to constitute good engineering designs, practices, and procedures. They support the RCRA TGDs and PGMs in certain areeas by describing current technologies and methods for designing hazardous waste facilities or for evaluating the performance of a facility design. Whereas the RCRA TGDs and PGMs are directly related to the regulations, the information in the TRDs covers a broader perspective and should not be used to interpret the requirements of the regulations.

This document is a Technical Resource Document. It reflects the considerable research that has been performed in the area of waste containment and the experience that has been gained in this technology. It incorporates responses to many comments received in the peer review of the draft document.

Comments on this publication will be accepted at any time. The Agency intends to update these TRDs periodically based on comments received and/or the development of new information. Comments on any of the current TRDs should be addressed to Docket Clerk, Room S-269(c), Office of Solid Waste and Emergency Response (WH-562), U. S. Environmental Protection Agency, 401 M Street, S.W., Washington, D.C., 20460. Communications should identify the document by title and report number.

ABSTRACT

This Technical Resource Document provides current information on the design, construction, and operation of surface impoundments used for the treatment, storage, or disposal of hazardous and non-hazardous wastes. The pertinent regulations under the Resource Conservation and Recovery Act (RCRA) are summarized. Surface impoundment structures that will meet the regulatory requirements are described. RCRA's "minimum technology requirements" specify double-lined structures with a leak collection and removal layer between the two liners. Dikes, liners, and leak collection layers may be constructed of combinations of soils and synthetic materials in multilayer systems. Other components, also described in the document, include leak detection systems, secondary containment, and liquid level monitoring systems. Methods for closing surface impoundments, either in-place or by waste removal, are described. In-place closure requires waste treatment and stabilization and the installation of a landfill cover that also must meet minimum technology regulatory requirements. Cover technology is also summarized. Details of the technologies summarized in this document may be found in the many references cited.

This report was submitted in fulfillment of EPA Purchase Order No. 1C6081 NATX by Robert P. Hartley under sponsorship of the U. S. Environmental Protection Agency. This report covers a period from October 1990 to February 1991, and work was completed as of February 15, 1991.

TABLE OF CONTENTS

SECTION PAGE

DISCLAIMER ii
FOREWORD iii
PREFACE. iv
ABSTRACT vi
LIST OF FIGURES. xiii
LIST OF TABLES xvi
ACKNOWLEDGMENTS. xvii

CHAPTER 1. INTRODUCTION 1

1.1 PURPOSE AND SCOPE. 1
1.2 BACKGROUND INFORMATION AND PREVIOUS STUDIES. 1
1.3 SURFACE IMPOUNDMENT REGULATIONS. 4

1.3.1 Design and Operating Requirements 4
1.3.2 Monitoring and Inspection Requirements. . . . 6
1.3.3 Emergency Repairs and Contingency Plans . . . 6
1.3.4 Response Action Plans 7
1.3.5 Closure and Post-closure Care 8

CHAPTER 2. PRE-DESIGN CONSIDERATIONS. 9

2.1 TOPOGRAPHY 9
2.2 SURFACE AND SUBSURFACE HYDROLOGY 9
2.3 GEOLOGY AND SUBSURFACE SOIL CONDITIONS 11
2.4 LAND USE 14
2.5 CLIMATE. 16

2.5.1 Flooding. 16
2.5.2 Precipitation vs. Evaporation 18
2.5.3 Soil Freezing and Thawing 19

2.6 AIR QUALITY. 19

CHAPTER 3. DESIGN 21

3.1 SELECTION OF BASIC CONFIGURATION 21

3.1.1 Impoundment Type. 21
3.1.2 Number, Size, and Position. 21
3.1.3 Impoundment Surface Area. 24
3.1.4 Impoundment Depth 25

3.1.4.1 Normal Operating Level 26
3.1.4.2 Maximum Operating Level without External Runoff Input. 26

TABLE OF CONTENTS (continued)

SECTION PAGE

Water Budget Approach. 27
Design Storm Approach. 30

3.1.4.3 Maximum Operating Level with External Watershed 31
3.1.4.4 Freeboard Determination. 32

3.2 STRUCTURAL COMPONENT DESIGN. 33

3.2.1 Foundation Analysis 34

3.2.1.1 Settlement 34
3.2.1.2 Bearing Capacity 35

3.2.2 Dike Design 35

3.2.2.1 Shear Strength 37
3.2.2.2 Slope Stability Analysis 39

Minimum Factory of Safety. 42

3.2.3 Liner Systems 44

3.2.3.1 Regulatory Constraints and Guidance 44
3.2.3.2 Geomembrane/Composite Double Liner .46
3.2.3.3 Geomembrane/Compacted Soil Double Liner 47
3.2.3.4 Double Composite Liner 48
3.2.3.5 Multiple-Layer Liner Materials and Specifications 49

Geomembranes 49
Geomembrane Protective Layers 52
Low-Permeability Soil Liners 54
Leak Detection and Collection Systems 57
Geotextile Filter. 59
Gas-Venting Layer. 60

3.3 LIQUID LEVEL CONTROL 60
3.4 SECONDARY CONTAINMENT. 65
3.5 LEAK DETECTION SYSTEMS 65
3.6 SURFACE WATER MANAGEMENT 68
3.7 CONTROLS FOR VOLATILE ORGANIC COMPOUND EMISSIONS . .71
3.8 CONSTRUCTION QUALITY ASSURANCE (CQA) PLAN. 73

TABLE OF CONTENTS (continued)

SECTION **PAGE**

CHAPTER 4. CONSTRUCTION 74

4.1 SITE PREPARATION 74
4.2 CUT-SLOPE AND FOUNDATION CONSTRUCTION. 74

4.2.1 Cut-slopes. 75
4.2.2 Dike Foundation 76

4.3 DIKE AND SOIL LINER CONSTRUCTION 77

4.3.1 General Construction Process. 77
4.3.2 Pre-placement Soil Preparation. 79
4.3.3 Soil Material Placement 80
4.3.4 Soil Compaction 80

4.4 GEOMEMBRANE LINER INSTALLATION 82

4.4.1 Storage of Materials and Equipment. 83
4.4.2 Construction Quality Assurance/Inspection . .83
4.4.3 Subgrade Preparation. 83
4.4.4 Geomembrane Liner Placement 84
4.4.5 Sealing Around Structures and Anchoring the Geomembrane 86

4.5 LEAK COLLECTION AND REMOVAL SYSTEMS. 88
4.6 TESTING THE LINER SYSTEM 90
4.7 PROTECTIVE COVERINGS 91

4.7.1 Liner Protection. 91
4.7.2 Dike Protection 91

4.8 LIQUID LEVEL CONTROL SYSTEMS 92

4.8.1 Active Liquid Level Control 92
4.8.2 Passive Liquid Level Control. 93

4.9 SECONDARY CONTAINMENT. 93

CHAPTER 5. OPERATION, MAINTENANCE, AND MONITORING 94

5.1 OPERATION AND MAINTENANCE ACTIVITIES 94

5.1.1 Facility Start-up 94
5.1.2 Routine Inspections and Maintenance 95

5.1.2.1 Regulatory Inspections of Facility 95

TABLE OF CONTENTS (continued)

SECTION PAGE

5.1.2.2 Operator Inspections of Dike Slopes, Faces, and Crest 97
5.1.2.3 Operator Inspections of Ancillary Site Facilities. 97
5.1.2.4 Liner Systems. 99

Detecting and Measuring Liner Leakage. 99
Determining the Cause of Liner Leakage. 102
Liner Repair 102
Solids and Liquid Removal. . . . 103

5.1.3 Record-keeping. 104

5.2 SAMPLING AND ANALYSIS MONITORING ACTIVITIES. . . . 104

5.2.1 Hazardous Waste Monitoring. 104
5.2.2 Air Monitoring. 107

5.2.2.1 Estimating Emissions from Surface Impoundments 107
5.2.2.2 Air Sampling and Analyses. 109

5.2.3 Ground-water Monitoring 110
5.2.4 Soil-vapor Monitoring 112
5.2.5 Leak Collection and Removal System Monitoring. 113

CHAPTER 6. CONTINGENCY PLANNING 115

6.1 LIQUID-LOSS RESPONSE PLANS 115

6.1.1 Contingency Plan. 115
6.1.2 Response Action Plan. 116
6.1.3 Corrective Action Program 118

6.2 TYPES OF FAILURE 119
6.3 RESPONSE PLAN IMPLEMENTATION 120

6.3.1 Contingency Plan Implementation 120

6.3.1.1 Immediate Actions. 121
6.3.1.2 Contamination Assessment 122
6.3.1.3 Selection and Implementation of Remedial Actions 123

TABLE OF CONTENTS (continued)

SECTION **PAGE**

6.3.1.4 Cleanup Verification 124

6.3.2 Implementation of Response Action Plan. . . 125

6.3.2.1 Leak Correction Verification . . . 127

6.3.3 Implementation of Corrective Action Program 127

6.3.3.1 Ground-water Cleanup Verification 128

6.4 PERSONAL SAFETY DURING REMEDIAL OPERATIONS 128

CHAPTER 7. CLOSURE AND POST-CLOSURE CARE. 130

7.1 ASSESSMENT OF CLOSURE OPTIONS. 132

7.1.1 Waste Characteristics 134
7.1.2 Site Location Features. 134
7.1.3 Cost. 134
7.1.4 Intended Future Site Use. 135
7.1.5 Environmental Risk. 135

7.2 CLEAN CLOSURE (CLOSURE BY REMOVAL) 135

7.2.1 Free Liquids. 136
7.2.2 Residual Sludges. 137
7.2.3 Subsoils, Liners, and Other Contaminated Materials 137
7.2.4 Verification Sampling 137

7.2.4.1 Sampling Schemes 138
7.2.4.2 Indicator Parameters 139
7.2.4.3 Quality Assurance/Quality Control. 139

7.2.5 Regulatory Variance 140
7.2.6 Backfilling 141

7.3 IN-PLACE CLOSURE 141

7.3.1 Removal of Free Liquids 142
7.3.2 Sludge Dewatering 142
7.3.3 Waste Residuals 143

7.3.3.1 Stabilization. 143
7.3.3.2 Treatment of Residues. 145

TABLE OF CONTENTS (concluded)

SECTION		PAGE
	Extraction	146
	Immobilization	146
	Biodegradation	148
	Chemical Degradation	148
7.3.4	Final Cover System	149
7.3.4.1	Protective Surface Layer	151
	Vegetation	151
	Topsoil Layer	151
7.3.4.2	Drainage Layer	152
7.3.4.3	Biotic Barrier	153
7.3.4.4	Hydraulic Barrier Layer	153
7.3.4.5	Gas-Vent Layer	154
7.3.4.6	Hydraulic Barrier Support Layer	155
7.4	POST-CLOSURE ACTIVITIES	155
7.4.1	Monitoring	157
7.4.2	Maintenance	157
7.4.3	Use of the Site	158
7.4.4	Delisting	158
REFERENCES		161

LIST OF FIGURES

FIG. NO. **PAGE**

1. Area of net evaporation in the United States. 19

2. Maximum anticipated depths of freezing. 20

3. Components of maximum operating level for (a) treatment, (b) surge, and (3) evaporation/disposal 22

4. Example of one large vs. four small impoundments. 22

5. Components making up impoundment design depth 25

6. Example of frequency distribution of monthly climatic data 29

7. Percent confidence that design return period will not be exceeded during design life. 30

8. Example of the effect of differential foundation compressibility on a surface impoundment dike 34

9. Forces and displacements in bearing capacity analysis . .35

10. Surface impoundment dike and liner interfaces and layers. 36

11. Mohr-Coulomb failure envelopes for clays and sands. . . .38

12. Typical compaction curves showing (a) dry unit weight - water content relation and (b) variation of shear strength with water content for a cohesive soil 39

13. Types of slope instability. 40

14. Factor-of-safety contours for slope stability 43

15. Cross section of double liner with composite bottom liner. 45

16. Cross section of double liner with soil-only bottom liner. 45

17. Cross section of double-composite bottom liner. 45

18. Impoundment dike cross section showing optional protective layers 53

LIST OF FIGURES (continued)

FIG. NO. **PAGE**

19. Junction of side-wall geonet and bottom granular layers of leak detection, collection, and removal system. 58

20. Example access for leak collection system and liquid removal. 59

21. Liner system showing gas vent layer and exit through top of dike 61

22. Dike spillway with protective apron 62

23. Impoundment overflow discharge pipe through dike. 62

24. Example of liquid-level monitoring setup; manually read staff gauge. 63

25. Example of liquid-level recording and alarm system. . . .63

26. Primary and secondary containment dikes 65

27. System to detect and locate leaks in top (primary) liner 66

28. System to detect leakage through top (primary) liner. . .67

29. System to detect leakage to the vadose zone 67

30. Lysimeter for leak detection beneath bottom liner 68

31. Runoff diversion past surface impoundment 69

32. Typical diversion ditch and berm cross sections 69

33. Wind diversion fences for VOC control 72

34. Cut-slope, dike, and side-wall cross section. 75

35. Idealized schematic showing effects of slope on compactive effort. 76

36. Dike cross section showing lifts and final slope cuts . .78

37. Compactor foot designs. 82

38. Geomembrane liner panel layout. 85

39. Geomembrane anchor designs at top of dike 87

LIST OF FIGURES (concluded)

FIG. NO.		PAGE
40.	Seals at geomembrane penetrations	88
41.	Example of leak collection system layout	90
42.	Example of geotextile use in leak collection system drain layer	90
43.	Cutaway view of emission sampling apparatus	109
44.	Example layout of ground-water monitoring wells	111
45.	Schematic of soil-gas sampling probe	113
46.	Flow chart of closure options and requirements	131
47.	USEPA-recommended landfill cover design	150
48.	USEPA-recommended landfill cover design with optional layers	152

LIST OF TABLES

TABLE NO. **PAGE**

1. Distribution of Surface Impoundment Applications. 2

2. Geotechnical Soil Properties Used to Characterize Surface Impoundment Site Soils. 14

3. Geotechnical Soil Properties Used to Characterize Borrow Material Sources 15

4. Sources of Climatic Data Used in Surface Impoundment Design and Analysis 17

5. Cost Comparisons of Different Surface Impoundment Positions with Respect to Grade (Geomembrane/Composite Liner) 24

6. Current Procedures for Stability Analysis 41

7. Typical Optimum Soil Liner Design Specifications. 56

8. Average Leak Rates (m^3/yr) from Different Size and Shape Flows in 0.08-cm HDPE Liner over Gravel at Two Liquid Heads 101

9. Calculated Leak Rate (m^3/yr) for a Range of Hole Sizes in Geomembrane Liners over Soils of Different Conductivities and for Three Heads. 101

10. Recommended Air Emission Models for Hazardous Waste Disposal Facilities 108

11. Outline of Contingency Plan Response Data Sheet 117

12. Innovative Investigation Technologies to Assess Site Contamination. 123

13. Advantages and Disadvantages of Closure Options 133

14. Test Procedures for Stabilized Wastes 145

15. Compatibility of Surface Impoundment Features and Various Site Uses for In-place Closure. 159

16. Compatibility of Surface Impoundment Features and Various Site Uses after Hazardous Waste Removal 160

ACKNOWLEDGMENTS

This document was prepared in draft form by PEI Associates, Cincinnati, OH, K. W. Brown and Associates, College Station, TX, and E. C. Jordan Co., Portland, ME. After updating and peer review, it was rewritten and prepared in final form under EPA Purchase Order No. 1C6081 NATX with Robert P. Hartley. The document was prepared under the supervision of Robert E. Landreth of the Risk Reduction Engineering Laboratory. Dr. Robert M. Koerner, Dr. Gregory N. Richardson, Dr. David E. Daniel, and Dirk Brunner were especially helpful in the final review of the document.

CHAPTER 1

INTRODUCTION

A surface impoundment is an excavation or diked area typically used for the treatment, storage, or disposal of liquids (e.g., wastewater) or materials containing free liquids (e.g., sludges). The hydraulic barriers in surface impoundments are usually constructed of low-permeability soil or polymeric membranes or both.

Liquids and solids typically separate in a surface impoundment by gravity settling. Liquids can be removed by draining, evaporation, or flow from an outlet structure. Accumulated solids may be removed by dredging during impoundment operation or when it is closed. Alternatively, solids may be left in place, as a landfill, when the surface impoundment is closed.

1.1 PURPOSE AND SCOPE

This document summarizes and supplements existing sources of information on the state-of-the-art in the design, construction, operation, and closure of surface impoundments used for waste containment. In addition, relevant regulations are briefly summarized, and post-closure activities are discussed. The document reflects the fact that most of the available information, ongoing research, and pertinent regulations deal with surface impoundments used to contain hazardous waste. However, much of the technical information should be applicable to non-hazardous waste impoundments, which comprise the majority of waste impoundment sites.

1.2 BACKGROUND INFORMATION AND PREVIOUS STUDIES

Two major baseline studies by the U.S. Environmental Protection Agency (USEPA) have gathered background information on surface impoundments. The first study (USEPA, 1983a) was a national survey to determine the number, size, and location of hazardous and non-hazardous waste surface impoundments and their potential influence on ground-water quality. The survey characterized over 180,000 surface impoundments. Nearly 30,000 are used by industry, including chemical manufacturers, food

processors, oil refineries, primary and fabricated metals manufacturers, paper plants, and commercial waste facilities. Most of the remainder are used in sewage and wastewater treatment. Organic chemical manufacturers are the largest industrial contributors to impounded hazardous waste. Most surface impoundments are not used for waste disposal but rather for waste treatment processes (i.e., neutralization, settling, anaerobic or aerobic digestion, pH adjustment, and polishing). The industrial surface impoundments ranged in size from less than 0.1 acre (29 percent) to greater than 100 acres (1 percent), with the majority less than 5 acres. (One acre = 0.405 hectare.)

The EPA national survey categorized surface impoundment applications into five groups with the percentages in each group used for storage, disposal, or treatment. The results are shown in Table 1. Note that the majority of agricultural surface impoundments were used for waste storage, the majority of oil and gas surface impoundments for disposal, and the majority of municipal, industrial, and mining impoundments were used for treatment.

TABLE 1. DISTRIBUTION OF SURFACE IMPOUNDMENT APPLICATIONS.*

	Storage	Disposal	Treatment
	%	%	%
Agricultural	55	26	19
Municipal	5	31	64
Industrial	17	31	52
Mining	18	27	56
Oil & Gas	29	67	4

*EPA (1983a).

The second major study (USEPA, 1984a), reviewed the design of surface impoundments and operating and maintenance practices, based on nine case studies and interviews with technical experts. Topics included site selection, liner material selection and performance, construction quality assurance (CQA) programs, operation and maintenance programs, and leak detection systems. USEPA concluded that, in many cases, inappropriate design criteria, CQA programs, and operation and maintenance procedures have resulted in release of impounded waste constituents to

ground water and/or surface water. The study identified areas in need of further research and development, including evaluation of new design concepts, compatibility of wastes and liner materials, and monitoring systems.

USEPA (1982a) has identified typical industrial surface impoundment applications as follows:

1. Mining and Milling Operations -- Surface impoundments are used to contain various wastewaters such as acid mine water, solvent wastes from solution mining, and wastes from dump leaching. Surface impoundments may also be used for separation settling, washing, sorting of mineral products from tailings, and recovery of valuable minerals by precipitation.

2. Oil and Gas Industry -- one of the largest users of surface impoundments. Surface impoundments may contain salt water associated with oil extraction and deep-well repressurizing operations, oil-water and gas-fluids to be separated or stored during emergency conditions, and drill cuttings and drilling muds.

3. Textile and Leather Industries -- Surface impoundments are primarily used for wastewater treatment and sludge disposal. Organic species impounded include dye carriers such as halogenated hydrocarbons and phenols; heavy metals impounded include chromium, zinc, and copper. Tanning and finishing wastes may contain sulfides and nitrogenous compounds.

4. Chemical and Allied Products Industries -- Surface impoundments are used for wastewater treatment, sludge disposal, and residuals treatment and storage. Waste constituents are process-specific, including phosphates, fluoride, nitrogen, and assorted trace metals.

5. Other Industries -- Surface impoundments are found at petroleum-refining, primary metals production, wood-treating, and metal-finishing facilities. Surface impoundments are also used for the containment and/or treatment of air pollution scrubber sludge and dredging spoils sludge.

Waste impoundments may contain complex mixtures of materials, often aggressive to lining materials, capable of rapid migration to ground water, and producing harmful emissions to the surrounding air. The design engineer must understand and minimize these potentials.

Much of the information needed in the design and construction of surface impoundments can be found in Technical Resource Documents published by the USEPA that deal with structural components common to both landfills and surface impoundments. The more significant of these include "Lining of

Waste Containment and Other Impoundment Facilities" (USEPA, 1988a), "Design, Construction, and Evaluation of Clay Liners for Waste Management Facilities" (USEPA, 1988b), and "Technical Guidance Document: Construction Quality Assurance for Hazardous Waste Land Disposal Facilities" (USEPA, 1986a). The USEPA's Office of Solid Waste has also issued technical guidance relevant to hazardous waste surface impoundments. Included are "Draft Minimum Technology Guidance on Double Liner Systems for Landfills and Surface Impoundments -- Design, Construction, and Operation" (USEPA, 1987a) and "Technical Guidance Document: Final Covers on Hazardous Waste Landfills and Surface Impoundments" (USEPA, 1989). The cited documents are supported by a significant amount of research and field experience, most of which is referenced in this document. Some of the later information has not yet been published, but has been cited here for completeness.

1.3 SURFACE IMPOUNDMENT REGULATIONS

The design, construction, operation, and closure of hazardous waste surface impoundments are regulated under authority of the 1984 Hazardous and Solid Waste Amendments (HSWA) to the Resource Conservation and Recovery Act of 1976 (RCRA). The most pertinent regulations are contained in 40 CFR 264, Subpart K, dealing specifically with new hazardous waste surface impoundments. They are summarized below.

1.3.1 Design and Operating Requirements

The rules for design and operation of liner systems for hazardous waste surface impoundments, provided in 40 CFR 264.221, are summarized as follows:

(1) A new or expanded surface impoundment must have a liner system that prevents migration of wastes to the adjacent subsurface soil, ground water, or surface water at any time during the active life of the surface impoundment. The liner system must be:

- constructed of materials with appropriate chemical properties and sufficient strength and thickness to prevent failure;
- placed on a foundation or base capable of supporting the liner and resisting pressure gradients above and below the liner to prevent failure; and
- installed to cover all surrounding earth likely to be in contact with the waste or leachate.

(2) New surface impoundments, and replacement or lateral expansion of existing surface impoundments, must have two or more liners and a leachate collection system between the liners. The liner and leachate collection system must include the following:

- a top (primary) liner that will prevent migration of any chemical constituent <u>into</u> such liner during the active life and post-closure care period;

- a lower (secondary) liner, that will prevent the migration of any chemical constituent <u>through</u> such liner during the active life and post-closure care period, (this requirement may be satisfied by a layer at least 3 feet [0.91 meter]* thick of recompacted clay or other natural material with a permeability equal to or less than 3.9×10^{-8} in./sec [1×10^{-7} cm/sec]); and

- a leachate collection system that must detect and remove liquids that leak through the primary liner (without clogging) during the active life and post-closure care period.

(3) Double-liner requirements may be waived by the Regional Administrator for any monofill (i.e., surface impoundment containing one type of waste) if the following requirements are met:

- the wastes are from foundry furnace emission controls or metal-casting molding sand, and contain no constituents that would render them hazardous for reasons other than EP Toxicity characteristics;

- the monofill has at least one liner for which there is no evidence of leakage;

- the monofill is located more than 0.25 miles (0.4 kilometers) from an underground source of drinking water;

- the monofill is in compliance with generally applicable ground-water monitoring requirements for RCRA-permitted facilities; and

---

* Throughout this document, English units of measurement are used, followed by metric equivalents in parentheses. English units are primary because nearly all cited work was originally done using English units and because most engineers still use the English system, except in referring to hydraulic conductivity.

- the monofill is located, designed, and operated so as to assure that there will be no migration of hazardous constituents into ground water or surface water at any future time.

(4) Surface impoundments must prevent overtopping resulting from normal or abnormal operations; overfilling; wind and wave action; rainfall; runon; malfunctions of level controllers, alarms, and other equipment; and human error.

(5) Surface impoundments must have dikes with sufficient structural integrity to prevent massive failure; dike stability should be analyzed with the presumption that liners will leak during the active life of the unit.

(6) The Regional Administrator will specify in the permit, the design and operating practices that are necessary to ensure compliance with the requirements of this section.

1.3.2 Monitoring and Inspection Requirements

The rules for monitoring and inspecting surface impoundments, provided in 40 CFR 264.226, are summarized as follows:

- During construction and installation, liners and cover systems (including synthetic, soil-based, and admixed systems) must be inspected for uniformity, damage, and imperfections. (Detailed construction quality assurance requirements have been proposed in 40 CFR 264.19 and 264.20 covering most structural features of a surface impoundment [USEPA, 1987i]).

- During operation, surface impoundments must be inspected weekly and after storms for evidence of overtopping, sudden drops in liquid level, and deterioration of dikes or other containment devices.

- Before a permit is issued or after an extended period of downtime, a qualified engineer must certify the structural integrity of the surface impoundment dike. (Note: it is assumed that a "qualified engineer" is a registered professional engineer.)

1.3.3 Emergency Repairs and Contingency Plans

The rules pertaining to emergency repairs and contingency plans for hazardous waste surface impoundments, provided in 40 CFR 264.227, are summarized as follows:

- Surface impoundments must be removed from service when the liquid level suddenly drops for reasons other than changes in the inflow or outflow (e.g., when the dike or liner(s) leak).

- To remove a surface impoundment from service, the owner/operator must cease adding wastes to it; contain surface leakage and stop the leak; stop or prevent catastrophic failure; empty the impoundment if the leak cannot be stopped; and notify the Regional Administrator within seven days of detecting the problem.

- The owner/operator must provide a contingency plan, as required in 40 CFR 264, Subpart D, that specifies procedures for complying with the requirements for removing a surface impoundment from service.

- Surface impoundments removed from service in accordance with these requirements may be restored to service only if the failed portion is repaired and the following steps are taken, if appropriate: the structural integrity of the dike is recertified; a new liner is installed; or the repaired liner system is certified by a qualified engineer to comply with the permitted design specifications.

- Surface impoundments removed from service and not repaired must be closed in accordance with the closure and post-closure care provisions of 40 CFR 264.228.

1.3.4 Response Action Plans

USEPA has proposed rules in 40 CFR 264.222 and 265.222 detailing the requirements for a response action plan to be implemented in case of leakage from a hazardous waste impoundment into the leak collection system. The proposal is summarized as follows:

- Two action leakage levels are proposed: (1) an "action leakage rate," (ALR) of between 5 and 20 gallons/acre/day (47 and 187 liters/hectare/day), which requires Agency notification and correction, but does not constitute an emergency; and (2) "rapid and extremely large leakage rate" (RLL) which must be determined for each site, and is the rate that exists when the fluid head is greater than the thickness of the leak collection layer.

- Response to a RLL must be immediate and major, because of the increased risk of escape of contaminants in a swamped system. Response to an ALR may be less immediate,

because the leak collection system can still handle the leak rate.

- The Response Action Plan for a RLL must accompany the permit application for a new surface impoundment. It may be submitted for ALR at a later time, but not later than the leak event.

USEPA (1987i) in 40 CFR 264.301 and 265.301 has also proposed that leak collection systems be capable of detecting a leak in the top liner as low as one gallon/acre/day (9.35 liters/hectare/day).

1.3.5 Closure and Post-closure Care

Rules for closure and post-closure care of hazardous waste surface impoundments are provided in 40 CFR 264.228. There are currently two closure options available:

- clean closure, which may be accomplished by removing or decontaminating all waste residues, contaminated containment system components, contaminated subsoils, and contaminated structures and equipment; or

- in-place closure (landfill or disposal unit closure), which may be accomplished by dewatering and stabilizing the wastes and placing an impermeable cover over the surface impoundment to minimize infiltration.

If clean closure is accomplished, no post-closure care is required. If in-place closure is performed, some waste residues or contaminated materials are left in place at final closure because it is technically or economically impractical to remove all waste materials; a 30-year (or other appropriate period) post-closure program is required. This program includes monitoring and maintaining the cover; monitoring the ground water and maintaining the ground-water monitoring system; monitoring, maintaining, collecting, and removing liquids in the leachate collection system; and preventing runon and runoff from damaging cover integrity.

Also included in 40 CFR 264.228 are rules that stipulate if clean closure of an surface impoundment is intended without satisfaction of the liner requirements of 40 CFR 264.221(a), then the closure plan must include both a plan for clean closure and a contingent plan for in-place closure, in case all contaminated subsoils cannot be practicably removed at closure.

CHAPTER 2

PRE-DESIGN CONSIDERATIONS

Factors affecting impoundment design include topography, geology, surface and subsurface hydrology, soil conditions, land use, and climate. Some environments should simply be avoided without further consideration of other factors. These environments include populated areas, flood-prone areas, karst terrain, unstable soils, wetlands, and aquifer recharge areas.

2.1 TOPOGRAPHY

Topographically, an ideal surface impoundment site is one that requires minimal physical modification to accommodate construction. This generally means an area of low relief. Wherever possible, the site should be above the 100-year flood elevation to minimize the height of dikes and the threat of flooding and washout.

A detailed topographic map is fundamental to site selection and impoundment design. The topographic survey can be conducted by aerial or field surveying methods; however, all sites will require some field surveying. Although published topographic maps may not provide sufficient detail for design, they may be used as base maps for the topographic survey and as sources of information on land use of the surrounding areas.

2.2 SURFACE AND SUBSURFACE HYDROLOGY

The proximity of surface and subsurface water is directly related to the risk of contamination from surface impoundment releases. High water tables, in addition to being high risk, may interfere with surface impoundment construction if they are above the bottom of the impoundment. The subsurface risk is higher in porous materials and less in dense clays. Desirable subsurface conditions include great depth to the uppermost aquifer and a massive clay soil zone enclosing the impoundment.

The direction of ground-water movement must be known, since downstream property is at risk if a release should occur. The flow velocity is also important as it may be directly related to the time available for remediation before significant environmental damage.

Information to be obtained during the hydrogeologic investigation includes the following:

- presence of a perched water table;
- depths to the uppermost saturated zones;
- ground-water flow direction;
- ground-water flow rates;
- vertical components of ground-water flow;
- potentiometric surface attitude;
- effects of seasonal and temporal factors on ground-water flow; and
- aquiclude characteristics.

Existing descriptions of the occurrence, location, hydraulic characteristics, and temporal and spatial behavior of shallow aquifers and aquicludes are unlikely to be sufficient. Gathering the necessary hydrogeologic information may require exploratory borings, installation of piezometers and observation wells, and aquifer testing (e.g., pumping tests, slug tests, and tracer studies). In most cases, placement of borings and sampling efforts can be coordinated with those conducted for the geology and subsurface soil survey. Interpretation of the data obtained from this investigation can be presented as potentiometric maps, geologic cross sections, boring logs, geologic maps, field and analytical test results, and a narrative description of the hydrogeologic conditions. This information is useful in the design of a ground-water monitoring system (see Section 5.2.3).

During the drilling of test borings, the location of saturated layers should be recorded. Piezometers and/or monitoring wells should be installed in selected boreholes to enable the determination of horizontal and vertical ground-water flow directions and for aquifer pumping tests. Core samples collected from saturated zones should be analyzed in the laboratory for particle-size distribution, porosity, and permeability.

The surface drainage pattern and flows and downstream water uses also must be known and related to potential releases from a surface impoundment. The associated risks should be considered and minimized in the design.

The surface water hydrology investigation should include determining stream flow characteristics, peak flood stages, and water quality. If sufficient design-related information is not available in existing sources, a field investigation should be conducted. Stream-flow characteristics can be measured with current meters and weirs or flumes. These devices allow measurement of stream discharge under weather conditions at the time of the survey. However, to estimate flow rates and volumes for 25-, 50-, and 100-year flood events, historical flood and precipitation data must be used.

The scouring and sedimentation effects of surface drainage may affect the stability of a surface impoundment. Any evidence of recent nearby stream meandering should be noted. If impoundment construction involves rerouting of surface drainage networks, the potential for scouring and/or sedimentation must be carefully evaluated.

The surface-water hydrology investigation should also include collecting samples of runoff and nearby streams, during periods of high and low flow, for water quality analysis. Analysis of these samples will be used to provide background data to determine the effect of potential releases to the surface water.

2.3 GEOLOGY AND SUBSURFACE SOIL CONDITIONS

The geologic makeup (rock lithology and structure) of a potential site should be determined in detail, for it can significantly influence the design of a surface impoundment and the environmental risk associated with it. Seismically active (earthquake) and unstable (sliding) areas should be avoided. Areas of differential subsidence, which may be suggested by intensive subsurface mining activity, are likely to be unattractive impoundment locations. Porous rock could allow rapid migration of any released liquids from an impoundment. Larger voids, either natural or man-made, would be of similar concern. Limestone, for example, is often characterized by solution-caused natural voids and channels. On the other hand, thick, dense, undisturbed shales may be nearly impermeable, a desirable characteristic.

The depth to bedrock is important. Fractured, porous rock near the surface may eliminate a site from consideration, while it might be acceptable at deeper levels under dense soil overburden.

The characteristics of the soil underlying the site affect the strength and long-term integrity of a surface impoundment structure and the risk associated with impoundment operation. As noted earlier, great thicknesses of clay and great depths to the upper aquifer, say 20 feet (6.1 meters) or more beneath the impoundment in both cases, are ordinarily most desirable. When such is true, impoundment releases will be naturally slowed and attenuated, thus adding to the time available for remedial actions before significant ground-water contamination occurs.

At the other extreme, coarse-grained, highly porous soils and shallow water tables are generally the least desirable site conditions for a surface impoundment. Perhaps most often, subsurface soil conditions will lie between the extremes of dense clay and highly permeable coarse materials. Layering and lensing

are likely in many, if not most, situations. It is important to determine the subsurface soil characteristics in three-dimensional detail, so that the design may correct for deficiencies and take advantage of soil attributes. Several types require special design treatment, if present at the surface impoundment site. These include expansive and sensitive clays, acid sulfate soils, sodic soils, poorly consolidated soils, saturated soils, and wind-erosive soils.

On-site or near-site soil materials suitable for dike and liner construction are desirable. Ordinarily, soils with a high clay content are sought that can be compacted to a high density and low permeability. Measurement and interpretation of several engineering properties generally reveal the soil's adequacy for construction purposes. The properties include grain size, water content, plasticity, permeability, bearing capacity, and shear strength. Since the soils will be used to retain waste liquids, chemical characteristics of the soils should also be determined. At a minimum, the measured properties should include pH, cation exchange capacity, and resistivity.

A comprehensive subsurface soils and rock investigation should assess the following:

- character, distribution, and thickness of the soil and the surficial geologic units;
- zones of saturation and ground-water surface elevations;
- pertinent physical and engineering properties of site soils and their horizontal and vertical variability;
- unstable conditions, including slopes, active or potentially active faults, seismic activity, and heave potential;
- ground response to excavation and the effect of stress increases from the facility loading; and
- suitability of on-site soil materials for construction of dikes, berms and low-permeability liners.

Several methods of soils and rock investigation are available. Prior to constructing a surface impoundment that covers a large area of land or is located in an area with difficult access, geophysical methods (e.g., seismic refraction surveys) can be used to obtain general information on subsurface conditions. Test pits can be used to observe shallow (i.e., zero to 15 feet [zero to 4.6 meters]) soil and ground-water conditions and to obtain soil and rock samples for laboratory testing. Test borings provide a means for assessing subsurface conditions at deeper depths (i.e., down to 100 feet [30 meters] or more), in-

situ testing, collection of soil samples for laboratory testing, and installation of ground-water observation wells. Test pits and borings should be excavated or drilled on a grid pattern across the site with grid density depending on site uniformity.

Test borings made to assess foundation conditions for structures, dikes, or fills should extend to a depth where the anticipated increase in stress from the proposed facilities will be less than 5 percent of the estimated overburden pressure. Large-diameter borings are sometimes preferable to smaller ones, especially when drilling in expansive soils or known earthslide areas, because it is often possible to locate the slide plane by examining the recovered soil samples. Thin-walled tube samples (i.e., "undisturbed" samples) should be taken for laboratory analysis at selected depths in strata suitable for such sampling.

Soil samples collected from test borings or test pits should be analyzed to determine engineering properties (e.g., hydraulic conductivity, compressibility, and shear strength) and to classify the soils. Shear strength analysis is necessary for surface impoundment design and is discussed in Subsection 3.2.2.1. Classification of soil should be done in accordance with the Unified Soil Classification System (USCS) (ASTM D2488-84). Representative samples from borrow material sources should be analyzed to determine if they meet design specifications. Soil test methods to characterize the geotechnical properties of site soils and potential borrow materials are listed in Tables 2 and 3, respectively. Laboratory test methods are also described in a number of geotechnical references (Lambe, 1951; U.S. Army Corps of Engineers [USACE], 1970a; Head, 1980; 1982; and 1986).

During the pre-design phase, the soils investigation should enable the designer to make the most economical use of the available on-site or nearby borrow materials. The following factors should be considered in selecting the borrow materials:

- expansion of soils of medium to high plasticity when placed under low applied pressure;
- compaction difficulties of plastic soils with high natural moisture;
- necessity of extensive mixing and/or separation of naturally stratified soils to be used for borrow material;
- design specifications for soils to be used for low-permeability soil liners, dikes, foundations, etc.; and
- available quantity of usable borrow material.

TABLE 2. GEOTECHNICAL SOIL PROPERTIES USED TO CHARACTERIZE SURFACE IMPOUNDMENT SITE SOILS.*

Property	Method
Soil Type	
Visual-Manual Procedure	ASTM D 2488
Particle Size Analysis	ASTM D 422
Atterberg Limits	ASTM D 4318
Soil Classification	ASTM D 2487 Soil Survey Staff (1975)
Strength	
Unconfined Compressive Strength	ASTM D 2166
Triaxial Compression	ASTM D 2850
Moisture Content	ASTM D 2216
Moisture-Density Relations	
Standard Proctor	ASTM D 698
Modified Proctor	ASTM D 1557
Hydraulic Conductivity (lab)	
Fixed Wall	EPA, SW-870 (1983b)
Flexible Wall	Daniel et al (1985) EPA, SW-846 (1982b), Method 9100
Hydraulic Conductivity (field)	
Large Diameter Single-Ring and Double-Ring Infiltrometers	Daniel & Trautwein (1986)
Sai-Anderson Infiltrometer	Anderson et al (1984)

*Minimum of 3 tests per soil type.

2.4 LAND USE

Hazardous waste surface impoundments are not normally desirable features of the landscape. They have a high potential for interfering with other land uses. Land use considerations can be the most significant controlling factors in siting a new surface impoundment. For this reason, most new surface impoundments are located in heavy industry areas or at existing waste treatment-disposal areas. They are most often constructed in areas where impoundments already exist. Outside these areas, remoteness from dense population is not only desirable but probably mandatory.

TABLE 3. GEOTECHNICAL SOIL PROPERTIES USED TO CHARACTERIZE BORROW MATERIAL SOURCES.

Property	Frequency of Measurement	Method
Soil Type		
Visual-Manual Procedure	each 1000 yd^3 (836 m^3)	ASTM D 2488
Particle Size Analysis		ASTM D 422
Atterberg Limits		ASTM D 4318
Soil Classification		ASTM D 2487 Soil Survey Staff (1975)
Strength		
Unconfined Compressive Strength	each 5000 yd^3 (4180 m^3)	ASTM D 2166
Triaxial Compression		ASTM D 2850
Moisture Content	each 1000 yd^3 (836 m^3)	ASTM 2216
Moisture-Density Relations		
Standard Proctor	each 5000 yd^3 (4180 m^3)	ASTM D 698
Modified Proctor		ASTM D 1557
Hydraulic Conductivity		
Laboratory-Undisturbed Cores	each 5000 yd^3 (4180 m^3)	
Fixed Wall		EPA, SW-870 (1983b)
Flexible Wall		Daniel et al (1985) EPA, SW-846 (1982b) Method 9100
Volume Change	each 5000 yd^3 (4180 m^3)	
Consolidometer		Holz, 1965
COLE		Grossman et al (1968)
Susceptibility to Frost Damage		
Classification		Chamberlain (1981)

Future land use may be a consideration at an existing or proposed hazardous waste surface impoundment. Uses will probably be restricted, depending upon the degree of contaminant removal

and the character of the waste remaining at the time of closure. Restrictions are likely to parallel post-closure monitoring requirements, with intensively monitored sites being the most restricted. Future use considerations should be integrated with planned uses of adjacent properties.

2.5 CLIMATE

Climate (e.g., excessive rainfall or low evaporation rate) may eliminate a particular type of surface impoundment as a waste-handling option. Otherwise, climate will seldom directly influence the selection of a surface impoundment site.

Climate plays a direct role in sizing a surface impoundment. The unit must be large enough to contain the planned waste volume plus some amount of precipitation. Other climatic factors may affect the operation of the impoundment. For example, air circulation (wind), temperature, and radiation affect waste volatilization rates and dispersion of emissions. These factors also affect the evaporation rate from the unit and thus the unit's size and need for periodic pumpout and treatment.

The most extensive, continuous, and reliable climatic data are available from National Weather Service reporting stations. If a station is not close enough to the planned impoundment, there may be other data sources, as shown in Table 4.

Factors directly related to climate that may influence site selection are discussed in the following subsections.

2.5.1 Flooding

The potential for flash floods and large-scale floods should be considered during the design of a surface impoundment. A flash flood results from localized, very heavy rainfall in a short time acting on a relatively small watershed. In this case, it would be the watershed containing the surface impoundment. Flash flooding occurs very quickly after, or perhaps even during, the precipitation event, and the flow may be high-velocity. It can occur in watersheds not subject to large-scale, longer-term flooding. Predicting peak flow from a flash flood is necessary for the design of runon control and diversion structures. Hydrologic analysis, using methods such as those developed by the Soil Conservation Service (SCS) (Kent, 1973), can be used to predict the maximum discharge and flood levels.

Large-scale flooding is the result of precipitation, often combined with snowmelt, acting on a regional watershed. Lag times are greater and flood duration longer than for flash floods. The events causing large-scale flooding usually occur

TABLE 4. SOURCES OF CLIMATIC DATA USED IN SURFACE IMPOUNDMENT DESIGN AND ANALYSIS.

Parameter	Type	Reference
Rainfall	Atlas of U.S. - Duration to 1 day and return periods to 100 years	Hershfield (1961)
	Atlas of Western U.S. - Durations to 1 day and return periods to 100 years	Miller et al (1974)
	Monthly totals and normals	NOAA (no date)
Evaporation	Atlas of U.S. - Average monthly Class A Pan Evaporation	Brown et al (1983)
	Class A pan evaporation - Monthly totals	NOAA (no date)
	Atlas of U.S. - Class A pan and pond evaporation	Kohler et al (1959)
	Atlas of Western U.S. - Class A and pond evaporation	Nordenson (1962)
	Mean annual Class A pan-to-lake coefficients	NOAA (1968) Kohler (1954)
	Monthly mean Class A pan coefficients	Jenson (1973)
	Monthly totals	State Climatologist or Agricultural Experiment Stations

over a sizable area that may include the locale of the surface impoundment, but they may take place completely outside it.

While flash flooding may occur almost anywhere near a stream, large-scale flooding ordinarily occurs in the valleys of larger, slower-moving streams. Units in areas prone to large-

scale floods must be designed to prevent washout from at least a 100-year flood.

Several sources of flood data are available (see Table 4). Because watershed characteristics may be altered by natural forces or by man's activities, flood maps may be inaccurate or outdated, and direct field evidence should be acquired to supplement or revise data from published sources.

Siting an impoundment within the 100-year flood plain or in an area prone to flash floods is generally not advisable and makes the acquisition of a permit more difficult. However, it does not preclude the construction of a surface impoundment that is designed accordingly. The erosive action of flowing flood waters or wave action, in addition to the potential for dike overtopping (externally and <u>into</u> the impoundment), must be addressed in the surface impoundment design in these situations, using estimates of flood depth and flow rate. Additionally, dike stability analyses should consider rapid drawdown effects, which occur when flood waters on outer dike slopes quickly recede. Larger safety factors are likely to be required.

2.5.2 Precipitation vs. Evaporation

Precipitation adds an unwanted liquid volume to a surface impoundment. In effect, it reduces the impoundment's waste-holding capacity. On the other hand, evaporation has the opposite effect, and is generally desirable. Precipitation and evaporation rates rank with the rate of waste input in design consideration. Together, they control the design capacity of the surface impoundment, and the design of the berms, discharge pumps, inflow/outflow structures, secondary containment structures, and surface water controls.

In humid regions, and in cases where the impoundment's purpose is to collect contaminated storm runoff, provisions for the storage and periodic discharge must be included in the freeboard design and in the design of inflow/outflow structures. Long-life, non-discharging surface impoundments (evaporation ponds) are feasible in the drier western U.S. where the evaporation rate exceeds precipitation (see Figure 1). Even there they are feasible only when storage capacity is adequate to handle extremes of precipitation and seasonal periods of excess precipitation. Short-life (say, less than five years), non-discharging storage impoundments may be designed in excess precipitation areas, with input being terminated when a pre-determined level is reached. Further discussions on surface impoundment water budgets and sizing considerations are included in Subsection 3.1.

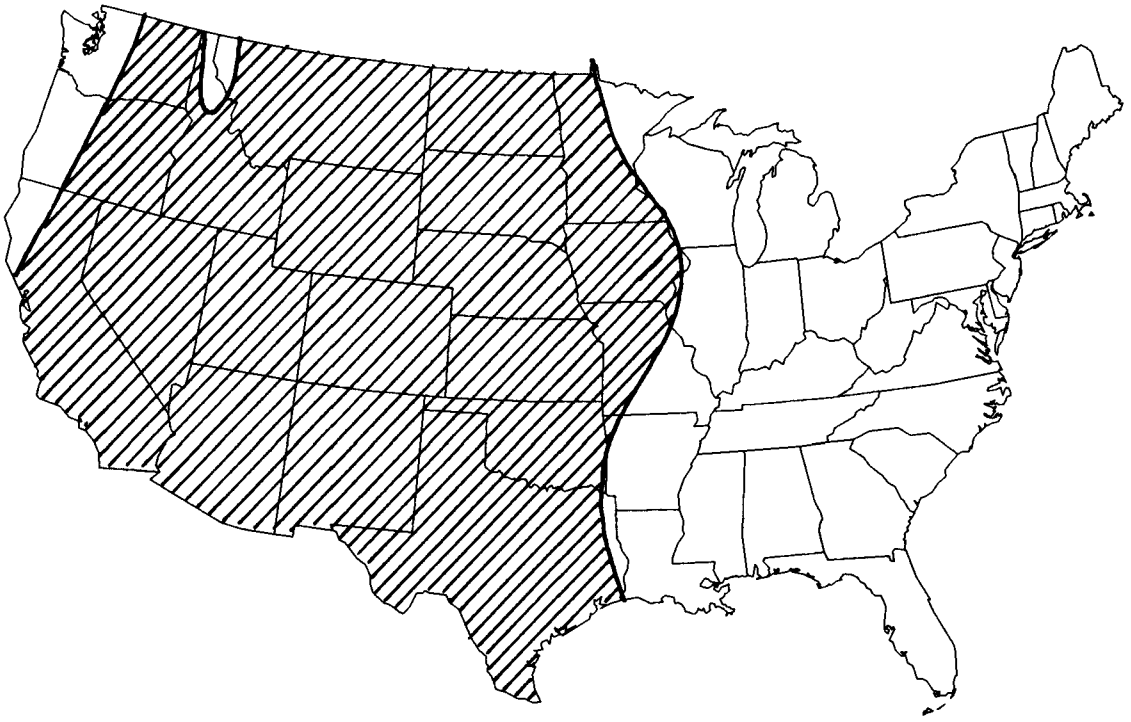

Figure 1. Area (shaded) of net evaporation in the U.S. (derived from NOAA data).

2.5.3 Soil Freezing and Thawing

Cycles of freezing and thawing, particularly in the northern states, can change the chemical and physical properties of soil from the surface down to the maximum freezing depth. Critical properties, such as permeability and shear strength, of constructed soil dikes and liner components may be adversely affected. Therefore, in evaluating some sites, particularly in northern areas, it may be necessary to add a protective cover over the liner or dike to the depth of maximum frost penetration.

Figure 2 shows the maximum anticipated depth of freezing for the contiguous United States. Local sources should be sought to determine the soil freezing depth for a specific site.

The freeze-thaw phenomena, as they affect soil-based structures, are summarized in an EPA publication on clay liner construction (USEPA, 1988b).

2.6 AIR QUALITY

Background air quality should be tested before surface impoundment construction to avoid potential distortion by later site activities. Background air measurements are particularly important in industrial areas where other emission sources are

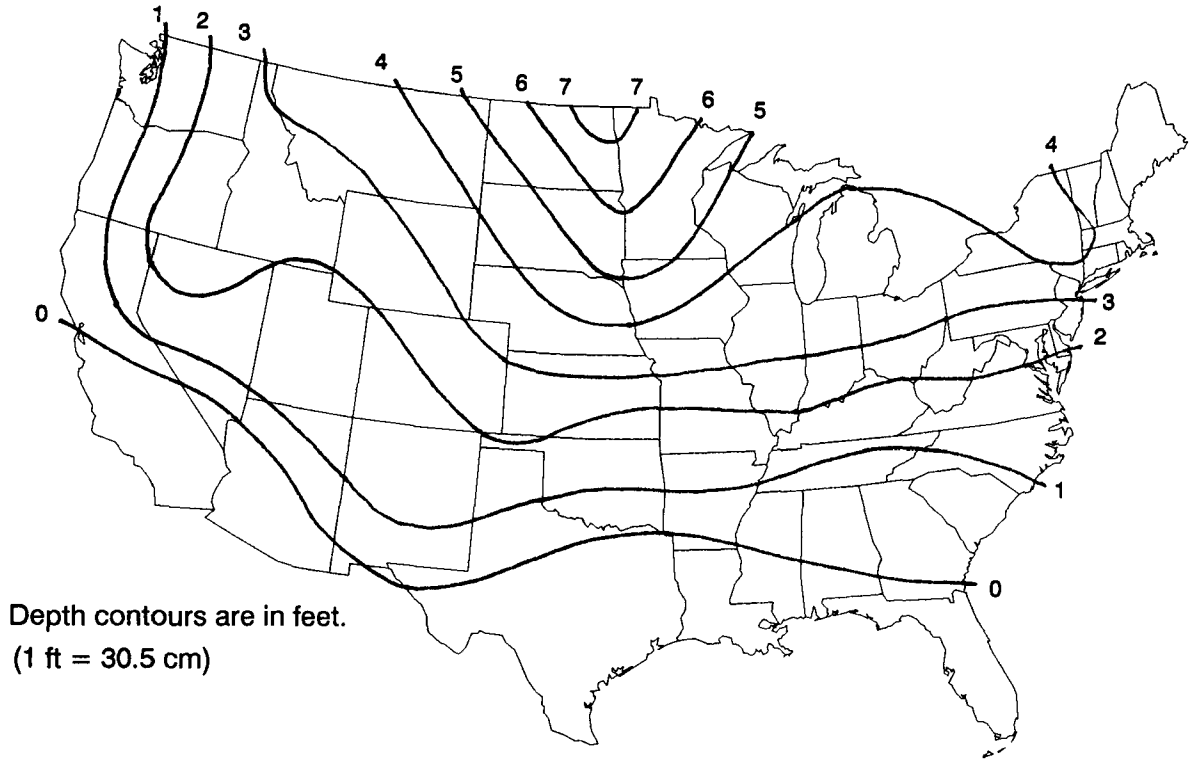

Figure 2. Maximum anticipated depths of freezing. (Spangler and Handy, 1982)

common. Testing should be conducted under a variety of weather conditions. Without background data, it may be difficult or impossible to confirm or defend against later accusations of emissions violations. Several air sampling techniques have been described by the USEPA (1985f).

CHAPTER 3

DESIGN

Fundamental impoundment design decisions include the basic configuration and the selection, justification, and arrangement of the structural components and ancillary facilities. Certain components of the configuration (e.g., a double-liner system) are now required by minimum technology regulations.

3.1 SELECTION OF BASIC CONFIGURATION

Among the first design decisions are the type of impoundment based on specific use; the number, size, and position of impoundment units; the impoundment shape and areal dimensions; and the selection of liner type.

3.1.1 Impoundment Type

The type of surface impoundment required depends on waste composition, waste-generation rate, and the purpose of the impoundment. A surface impoundment can be classified as one of three generic impoundment types: (1) treatment; (2) surge or equalization (i.e., storage); and (3) non-discharging (evaporation or disposal). Figure 3 depicts the three types. The greatest number in use are of the treatment type.

Waste inputs and treated waste discharges from treatment impoundments may be steady, fluctuating, or intermittent. Except for some surge or equalization impoundments that are intended to collect runoff, the only external water input is direct precipitation on the impoundment surface and interior dike slopes. Non-discharging surface impoundments generally rely strictly on natural evaporation to maintain liquid level.

3.1.2 Number, Size, and Position

More than one impoundment may be required where several incompatible liquid wastes are to be stored. Multiple impoundments may also be desirable for single or compatible wastes in some situations. Unger et al. (1985) compared a large single surface impoundment to multiple small impoundments, as depicted in Figure 4, with respect to cost and the implications

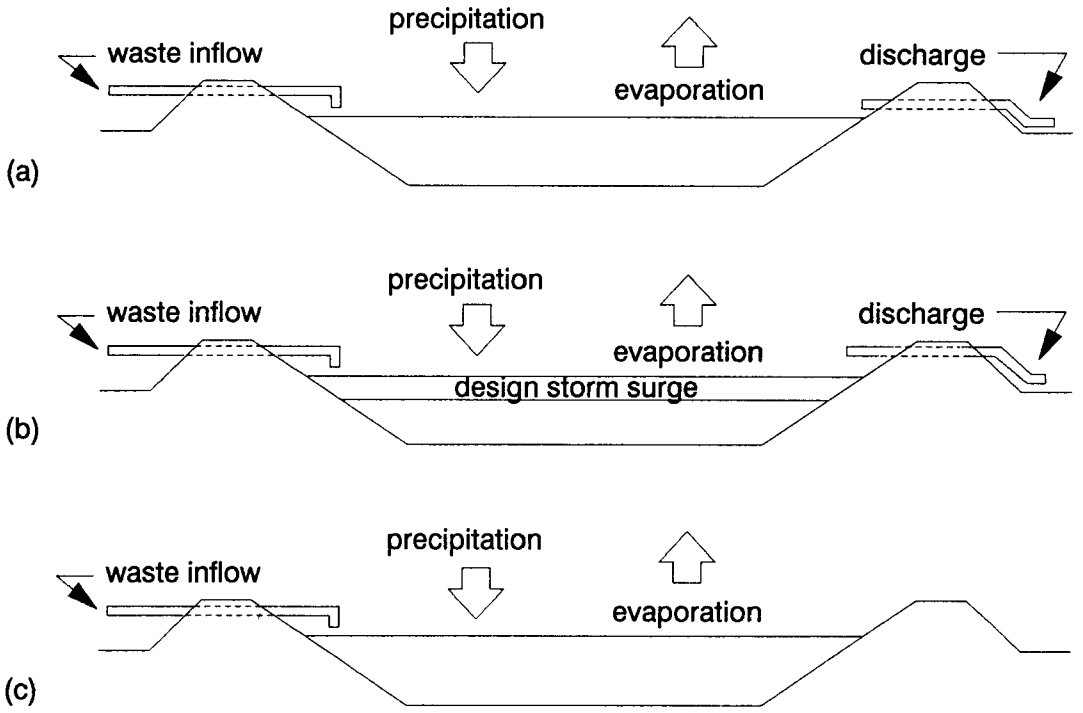

Figure 3. Components of maximum operating level for (a) treatment, (b) surge, and (c) evaporation/disposal.

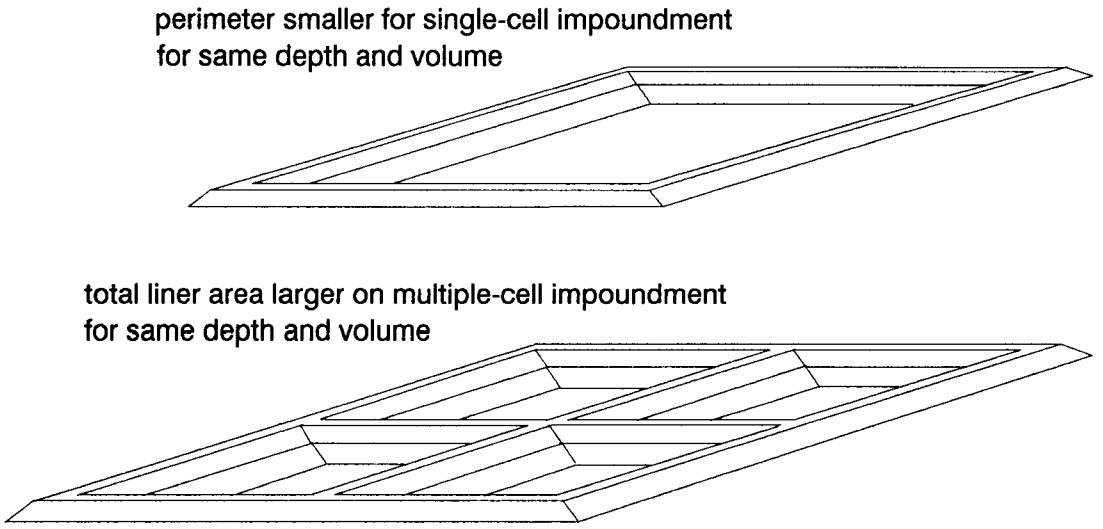

Figure 4. Example of one large vs. four small impoundments.

of dike and liner failure. Each was optimized for the highest "fill efficiency ratio," which is defined as the most cost-effective dimensions for a given volume. The side slopes were 3H:1V in each case. It was found that four small impoundments would cost nearly twice as much as a single large impoundment. Other factors were also considered. For example, there is a risk of greater leakage due to more geomembrane liner seam length and greater bottom surface area in multiple impoundments. On the other hand, higher head, and higher hydraulic gradients in clay liners, make can increase the risk in a single large impoundment. The risk of a dike failure occurrence is greater in multiple impoundments due to more dike length, but greater environmental damage would ensue from dike failure of a single large impoundment. All things considered, it appears that a single large impoundment and multiple small impoundments, constructed to serve the same purpose, are approximately equal in environmental risk.

According to the USEPA (1983b) the most common and most economical shape for a surface impoundment is rectangular with straight-sloped sides. Other shapes increase the cost of grading, dike construction, and liner installation. The rectangular shape was confirmed in the later study by Unger et al (1985). That study did not consider the cost differences between impoundments excavated entirely below grade, those diked entirely above grade, and combinations of excavation and above-grade dikes. Unger's study assumed the combination type.

Orientation of a surface impoundment with respect to compass direction is probably relatively unimportant as a design consideration. However, if the primary geomembrane liner is exposed (not covered with a protective soil layer), weathering effects are likely to be the most severe on south-facing slopes (those slopes exposed to direct sunlight for the longest periods) (USEPA, 1985j). The designer may want to consider this potential in orienting a rectangular impoundment, if he has the freedom to do so. Another possible consideration in larger impoundments is the fetch, or the orientation of the long dimension compared to higher-velocity prevailing winds.

The position of the surface impoundment with respect to natural grade can vary from one excavated below-grade, to one entirely above grade and surrounded by containment dikes, to a combination of the two. The most common is the combination type, probably because it is the most economical to construct. For this type, the excavated material can often be used as dike material. Below-grade surface impoundments have the environmental advantage of being less prone to catastrophic failure, since no dike is involved. Above-grade impoundments, on the other hand, could lose all their waste to the surrounding area if the dike were breached. Table 5 is a cost comparison for a surface impoundment with respect to the three positions.

TABLE 5. COST COMPARISONS OF DIFFERENT SURFACE IMPOUNDMENT POSITIONS WITH RESPECT TO GRADE (GEOMEMBRANE/COMPOSITE LINER)

Operation	Cost		
	Above Grade	Below Grade	Combination
Geotechnical Invest.	$13,805	$13,805	$13,805
Clear and Grub	2,325	2,325	2,325
Excavation	0	40,562	20,602
Foundation Preparation	1,670	3,463	2,708
Berm Construction	41,095	0	8,556
Soil Liner	126,982	123,657	125,734
Sand Drain Layer	26,928	26,170	26,639
Geosynthetic Drain Layer	27,182	28,478	27,432
Geotextile Layer	6,313	5,869	6,175
Primary Geomembrane Liner	18,151	16,873	17,754
Geotextile Layer	6,313	5,869	6,175
Geomembrane in Composite Liner	21,825	20,452	21,397
Leak Detection			
Main	421	372	408
Lateral	1,234	728	1,196
Riser	0	82	425
Pump	8,955	8,955	8,955
Sump	4,964	4,964	4,964
Riprap	8,186	0	3,314
Level Controller	5,000	5,000	5,000
TOTAL	$321,349	$307,624	$303,564

Note: All impoundments are designed to hold 9,940 m^3 (2.63 million gallons) of waste liquid (Unger et al, 1985). Construction materials assumed to be the same in all 3 cases. Actual site-specific costs of construction may be grossly different.

3.1.3 Impoundment Surface Area

Standard reservoir tables (Kays, 1977) can be used to determine volume and liner areas for various surface impoundment configurations. Usually, the surface area and storage capacity requirements are known beforehand or are determined during pre-design. The surface area may be limited by available land area. If so, it can usually be compensated, within reason, by increasing the impoundment depth.

Surface area is one of the more important factors in impoundments used for evaporation. The rate of evaporation must equal or exceed the rate of precipitation plus the liquid (aqueous waste) inflow rate. If, for example, evaporation is 40 inches (102 cm) per year and precipitation is 30 inches (76 cm), then 10 inches (25 cm) per year is available for waste liquid input. Thus, the larger the surface area, the larger the amount of waste liquid that can be accommodated.

The potential for slope damage by wave action increases with impoundment size and is directly related to both area and depth.

3.1.4 Impoundment Depth

The surface impoundment depth is a function of the waste volume to be handled, its eventual disposition, and the increased depth necessary to contain foreseeable and unforeseen events. Assuring adequate depth by accurately predicting liquid levels for all circumstances is a very important design operation.

The liquid level in a surface impoundment will change due to waste inflow and outflow, storm surges, precipitation, runon (if applicable), wind speed, and dike slope. Figure 5 is a cross-sectional representation of a surface impoundment, showing the components which cumulatively make up its design depth. The bottom liquid level shown on the figure is the normal operating level which takes into account only waste inflows and discharges. The next higher liquid level on the figure is the maximum operating level. The maximum operating level is the resultant level caused by the addition of water from a major climatic event to the normal operating liquid level. The major climatic event may be, for example, the wettest month in 25 years, or a 100-year 24-hour rainstorm. Additional impoundment depth allowances (freeboard) are included for wind set-up, wave run-up, and finally a safety factor.

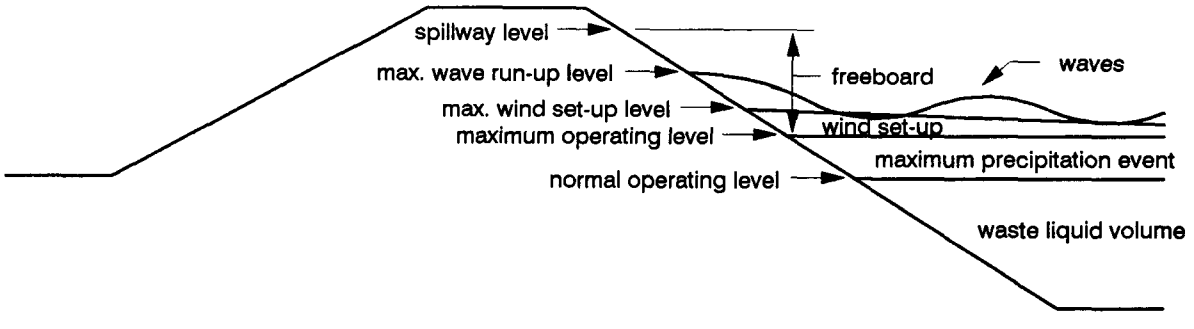

Figure 5. Components making up impoundment design depth.

3.1.4.1 Normal Operating Level --

For flow-through impoundments, normal operating liquid level can be determined from waste inflow and outflow rates, liquid surface area, and detention time of wastes in the impoundment, using the following formula:

$$d = \frac{Q_i t - Q_o t}{A}$$

where:

d = normal liquid level or depth in ft. (m)
t = average detention time (hr)
Q_i = maximum rate of inflow during t in ft^3/hr (m^3/hr)
Q_o = average rate of outflow during t in ft^3/hr (m^3/hr)
A = liquid surface area in ft^2 (m^2)

For non-flowthrough (storage) impoundments, where inflow exceeds evaporation over the long term, the liquid level will rise. Reaching the design level would call for an end to operations, or for cleanout and resumption of operations. In this case, the above equation would be solved for t, for a given design depth (d) and surface area (A).

The normal operating level in a surface impoundment used for evaporation may be considered, in some cases, to be the highest liquid level reached during a normal year, for example during a "rainy season," when precipitation exceeds evaporation. If the waste inflow is variable, the highest expected waste inflow would be added to the higher precipitation.

3.1.4.2 Maximum Operating Level without External Runoff Input --

Designing the surface impoundment's maximum operating level is typically done using one of three methods: hydrologic models; water budget approach; or design storm approach.

The additional storage capacity calculated as being necessary to contain climatic extremes will vary depending upon the method used. Geographic areas having high temporal variability in rainfall amounts (e.g., the southwestern U.S.), generally have larger storm surcharges that are calculated using a recorded rare return-period storm rather than using a water budget or hydrologic simulation approach. The choice of approach for determining the maximum operating level will depend on the availability of climatic data and hydrologic models, and the type of impoundment operation, waste characteristics, and the risks associated with an uncontrolled release of hazardous waste from the surface impoundment.

Water Budget Approach -- The water budget can determine the feasibility of using a surface impoundment at the given locale and can help determine the needed storage volume for non-discharging disposal or evaporation units. Storage requirements are a function of precipitation and evaporation and waste inputs. A basic assumption in a water budget for most non-discharging surface impoundments is that there is no net change in the volume of liquid in the impoundment over the long term.

Regardless of the intended impoundment use, the water budget for determining the maximum operating level (and storage capacity) can be derived from the following expression:

$$S = P + W - E - D - L$$

where:

S = change in storage
P = precipitation
W = waste input
E = evaporation
D = discharge
L = leakage (negligible for a functional liner)

The water budget can be computed using the climatic record, watershed properties (for units that collect runoff), waste input rates, and discharge rate, if applicable. For the purpose of these calculations, it is assumed that adequate volume will be available to contain all events (i.e., no overtopping of passive level controls, such as spillways).

The approach taken is a frequency analysis to determine the amount of excess precipitation (i.e., rainfall minus evaporation) that can accumulate in the impoundment in a given period, at least equal to the active life of the impoundment. Long-term records (preferably more than 20 years, but at least equal to the impoundment life) of precipitation and lake evaporation are required for these water budget calculations. Measurements of pan evaporation can also be used, although pan-to-lake coefficients will have to be applied (Saxton and McGuinness, 1982). The data should be obtained from National Oceanic and Atmospheric Administration (NOAA) weather stations or other local weather stations located as close to the impoundment site as possible, and from hydrologically similar areas. Long-term precipitation records are available for weather stations across the U.S. (NOAA, 1983). While stations collecting evaporation data are fewer in number, evaporation rates are reasonably similar over regional areas (Saxton and McGuinness, 1982); therefore, evaporation data collected at the nearest weather station recording that parameter can often be used.

Usually an empirical probability distribution is used with observations of precipitation and lake evaporation data to determine excess precipitation amounts. Monthly totals are commonly used to simplify data requirements, although data compiled for shorter increments (e.g., the design retention time) may lead to a more accurate estimate of storage requirements.

The occurrence frequency of excess precipitation amounts is determined by ranking the observed data, computing a plotting position, and plotting the excess precipitation amounts and positions on probability paper. A widely used, consistent plotting position formula is the Weibull Relationship (Haan, 1977). Haan (1977) and Osborne et al (1972) present information on frequency analysis and probability plotting. The Weibull Relationship is expressed as follows:

$$P(y) = \frac{m}{N + 1}$$

where: y = the excess precipitation value
P(y) = the plotting position
m = the rank of the excess precipitation value
N = the number of observations

The return period, or recurrence interval, is given by the inverse of P(y). There is no general agreement as to which statistical distribution should be used for this type of frequency analysis. The National Weather Service (NWS) used a modified version of the Gumbel extreme value distribution to develop a rainfall frequency atlas (Miller et al., 1974) for the U.S. Pruitt and Snyder (1984) recommend using the normal distribution for determining surface impoundment storage needs for reclaimed wastewater irrigation projects.

Regardless of the distribution chosen, if a data set plots as a straight line on the probability paper, the data are said to be distributed as the distribution corresponding to the probability paper. Because it is rare for a set of data to plot exactly on a line, a decision must be made as to whether the deviations from the line are random or true deviations, indicating that the data do not follow the given probability distribution. Often, several types of frequency plots must be evaluated to select the appropriate distribution. Figure 6 is an example probability plot for excess precipitation which follows a normal distribution.

In this example, excess precipitation was greater than six inches (15 cm) in 10 percent of the months recorded. This additional six-inch (15-cm), one-month storage requirement corresponds with a 10-year return period.

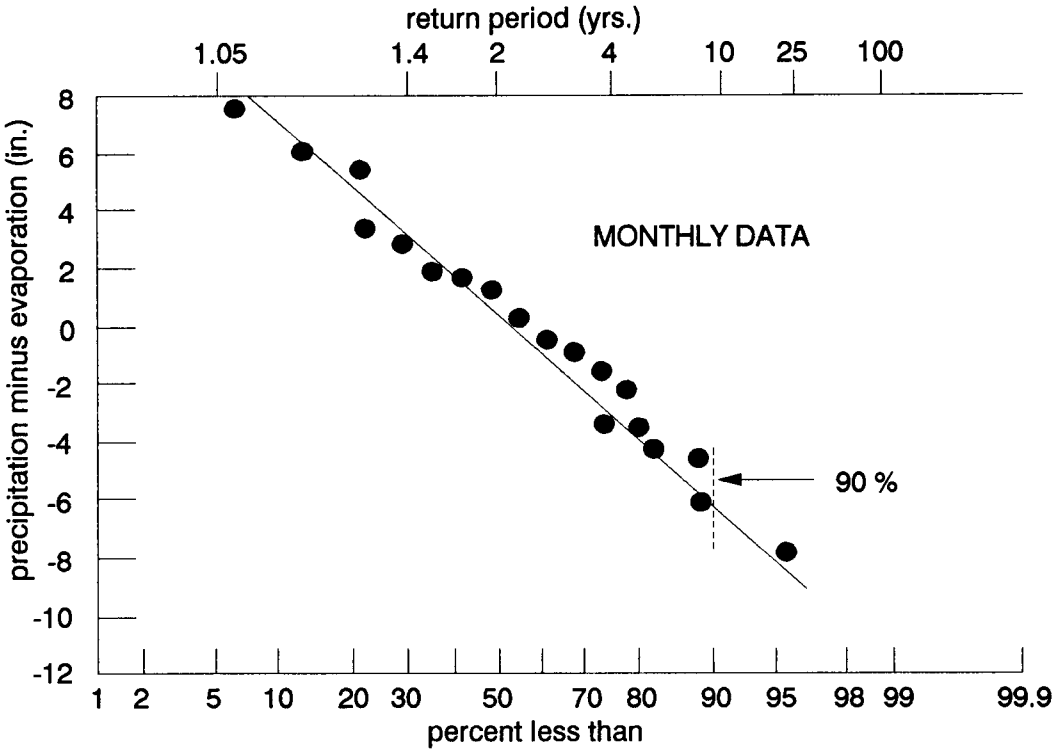

Figure 6. Example of frequency distribution of monthly climatic data.

Once the probability plot of excess precipitation is constructed, the next step in establishing the maximum operating level is selecting the maximum climatic event (monthly precipitation minus evaporation) that can be tolerated, and the associated precipitation amount. Because surface impoundments may contain hazardous waste, the probability of occurrence of a climatic event that results in exceedance of the maximum operating level (and possible release) must be very small. The maximum probability recommended is a 1 in 25, or 4%, probability that the maximum operating level will be exceeded in any year. This probability level represents a return period of 25 years for the maximum monthly excess precipitation calculated using the water balance approach. However, this does not mean that the maximum operating level will not be exceeded during a 25-year design life.

Figure 7 shows the design return period required so that the maximum operating level will not be exceeded during the expected facility life for various degrees of confidence. As shown on the graph, to be 90% confident that the maximum operating level will not be exceeded in a surface impoundment with a 10-year design life, the impoundment must be designed using a 100-year climatic event.

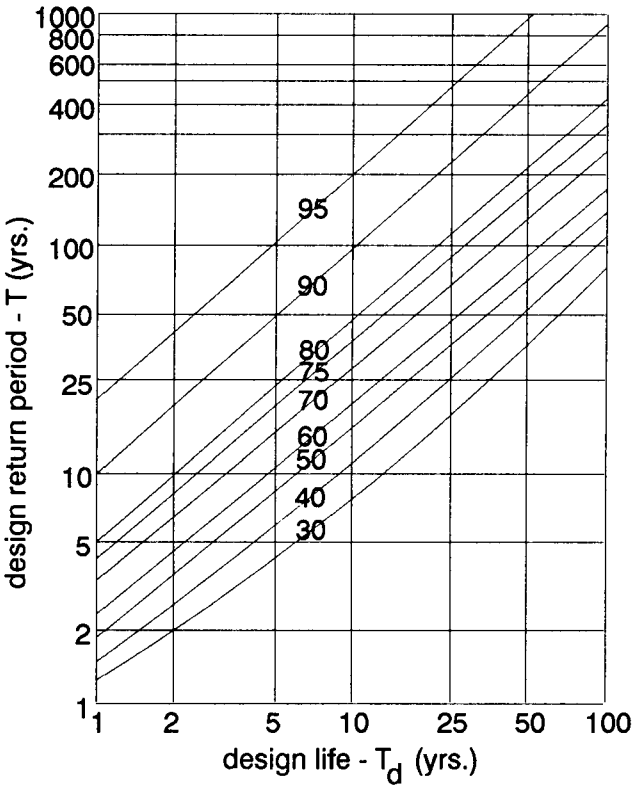

Figure 7. Percent confidence that design return period will not be exceeded during design life.

Design Storm Approach -- The simplest approach for determining the maximum operating level is to make it equivalent to the additional storage capacity, over the normal operating level, that is needed to contain precipitation from a single design storm. The minimum acceptable probability of a discharge for hazardous waste surface impoundments is the 100-year, 24-hour storm. This value represents a 1-percent probability that the given amount will be equaled or exceeded in any given year. It also says that if 1,000 surface impoundments are in operation throughout the U.S., using the 100-year, 24-hour storm would result in about 10 units (1% x 1,000) equaling or exceeding this amount each year.

Figure 7 should be consulted to evaluate the risk or percent chance of a precipitation event in excess of the design storm during the facility design life. For the 100-year return period and 10-year design life, there is a about a 10% chance that the maximum operating level will be exceeded.

Adding to the confidence that the maximum operating level will not be exceeded is the fact that the storm surge amount is

added to the normal operating liquid level, which already accounts for extremes in waste inputs. The likelihood that the extreme events would coincide is slight. The further inclusion of freeboard that accounts for wind set-up, wave run-up, and a safety factor adds still more assurance that wastes can be safely contained under any conditions.

3.1.4.3 Maximum Operating Level with External Watershed --

Computing the maximum operating level of a surface impoundment having an external watershed (e.g., an impoundment used for detention of runoff) requires adding watershed runoff to the direct precipitation on the impoundment surface. The volume contributed by runoff will be directly related to the watershed area and is likely to be much larger than the volume contributed by rainfall directly on the impoundment surface.

Available hydrologic models were not developed for surface impoundment design, but can be modified to meet the need. Most rainfall models are designed to predict runoff and are suited for estimating storm surges to surface impoundments that act as catchment basins. To date, none of the many available models has been widely used. One of the better suited models is STORM (Storage, Treatment, Overflow, Runoff Model), developed for the USACE Hydrologic Engineering Center (HEC). STORM is a stochastic rainfall model used to predict thunderstorm activity and to generate a synthetic rainfall record for watersheds (Corotis, 1976). Stochastic rainfall models such as STORM are particularly useful in geographic areas where the weather record may not be sufficiently long for use in impoundment design.

The Soil Conservation Service developed a method for estimating volume and rate of runoff from U.S. agricultural watersheds (Kent, 1973). A more detailed description of the SCS method has been provided by McCuen (1982). The "Rational Formula" is another widely used method for predicting peak runoff from a small watershed for a given design storm intensity:

$$Q = CIA$$

where

Q = runoff volume (cubic feet per second)
C = runoff coefficient (dimensionless); the percentage of rainfall that is surface runoff
I = average rainfall intensity (inches per hour)
A = watershed area (acres)

Introductions to the SCS and Rational Formula methods and others have been provided by Whipple et al (1983) and Osborne et al (1972). The hydrologic models discussed earlier will commonly estimate runoff volumes directly or provide synthetic rainfall records to be used in a runoff model.

3.1.4.4 Freeboard Determination --

Freeboard is the distance from the water line on a structure to the top of the structure. In the case of a surface impoundment it is the distance between the maximum operating level and the liquid level (e.g., spillway level) which would result in the release of stored liquid. Determining necessary freeboard in impoundment design requires considering wind speed, fetch, maximum liquid depth, and the slope and roughness of the embankment. These factors influence the development of waves, wave run-up, and wind set-up. Wave run-up and wind set-up, plus a safety factor, are accounted for in the calculation of freeboard.

Wind speeds used in freeboard calculations should be based on local historical data for maximum sustained winds. In the absence of such data, a value of 75 mph (120 km/hr) is suggested for areas that are not subject to hurricanes, and a value of 100 mph (161 km/hr) for areas that are hurricane-prone. In this document, a "hurricane-prone area" is any area within 50 statute miles (80 km) of a coast subject to hurricanes (USEPA, 1986b).

Fetch is the distance that the wind blows over the water (or waste liquid) surface. For a surface impoundment, it will vary with the wind direction vs. the orientation and dimensions of the impoundment. In a rectangular impoundment, the maximum fetch will be along the diagonal.

Depth of the impoundment will ordinarily be uniform, or nearly so, over most of the liquid area, with relatively small slope areas along the edges, if the total area is more than, say, an acre. For calculation of wave height and set-up, the depth can be considered essentially uniform. For small impoundments, where the slopes make up most of the area, fetch, and thus wave action and runup, are likely to be insignificant.

Techniques for predicting wave action in shallow water are provided by USACE (1984). Maximum wave height and wave length are directly related to fetch and water depth. Using a fetch (distance that the wind blows across the impoundment) of 300 feet (91 m), a liquid depth of 10 feet (3 m) and a wind speed of 75 mph (120 km/hr), the maximum wave height would be 0.9 feet (0.3 m). Waves would not be expected to break under these conditions, or in any normally designed surface impoundment.

Wind set-up is the rise in liquid level on the downwind side of a surface impoundment caused by the wind pushing the liquid to that side (Figure 5). A corresponding drop in level occurs on the upwind side. In the past, wind set-up has largely been ignored in determining freeboard requirements for surface impoundments. Two methods considered acceptable for set-up calculation have been presented by Keulegan (1951) and Van Dorn

(1953). Given the same wind conditions and impoundment dimensions shown above, the set-up would be 1.11 feet (0.34 m).

Wave run-up is the vertical height to which approaching waves force water above the still water level on a sloped embankment (see Figure 5). Wave height, embankment slope and slope roughness affect wave run-up height. Typically, the highest run-up occurs on low smooth slopes. Most investigations conducted to accurately define the parameters that control run-up have been directed toward run-up on beaches, seawalls, and breakwaters (USACE, 1984; Machemehl and Herbich, 1970; Saville, 1956; Toyoshima et al, 1966). Roughness factors will vary from a value of 1.0 for smooth synthetic liners to 0.45 for coarse surfaces (e.g., riprap) (USACE, 1984). Curves that relate slope roughness to other freeboard parameters are convenient for estimating roughness effects and can be found in Saville (1956) and USEPA (1986b). Saville (1956) looked at run-up on smooth surfaces, which applies to defining run-up on smooth synthetic liners used in many surface impoundment designs. In surface impoundments, the highest run-up can be expected on slopes of 3:1 to 5:1 lined with impermeable synthetic membranes (Saville, 1956). Therefore, the designer should consider, as protective cover, rough-surfaced materials such as riprap, to reduce run-up, or he should consider, generally as a lesser option, designing steeper slopes.

More detail on freeboard calculation can be found in references by Herbich (1986) and those cited above.

3.2 STRUCTURAL COMPONENT DESIGN

The following subsections discuss the structural considerations necessary in the design of a surface impoundment. References are presented that may be consulted for detailed information on specific mechanics of the design process. The design components discussed include the following:

- dikes and foundations
- liner systems
- liquid level controls
- inflow and outflow
- protective coverings
- secondary containment
- leak detection systems
- surface water management
- controls for emissions of volatile organic compounds (VOC)
- construction quality assurance

3.2.1 Foundation Analysis

The foundation underlying a surface impoundment is the native soil. The soil must be capable of supporting the added load of an overlying dike. It also must be capable of supporting the load imposed by the impounded waste. Although it is not likely, that load may exceed the load removed by excavation. The potential for soil compression and the soil's bearing capacity are the properties of principal concern.

3.2.1.1 Settlement --

Foundation compressibility is an important consideration if sections of a dike will be placed on soils that are soft or loose. Such soils will consolidate (compress) under the additional load imposed by the dike. If the dike height, foundation thickness, and/or foundation compressibility vary, differential settlement and perhaps cracking of the dike and liner could result as shown in Figure 8.

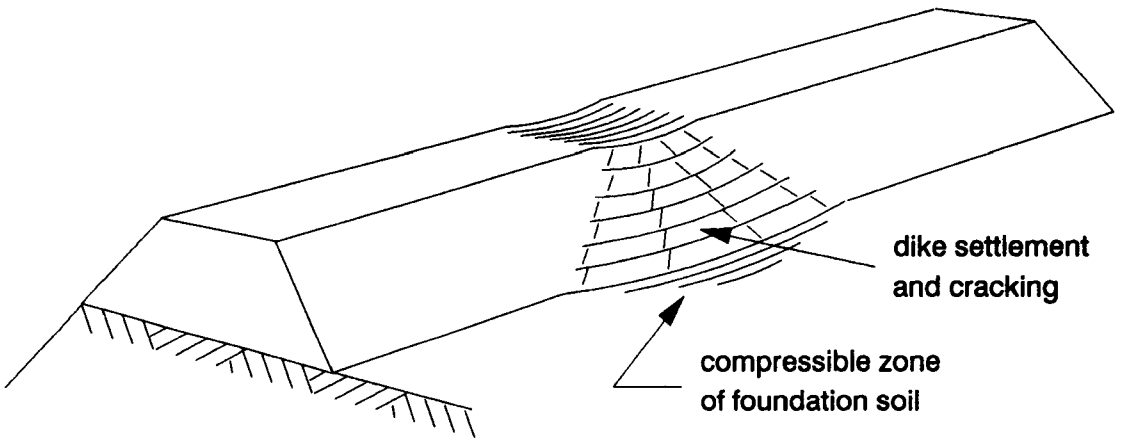

Figure 8. Example of the effect of differential foundation compressibility on a surface impoundment dike.

The compressibility of fine-grained soils can best be determined in the laboratory by consolidation tests on undisturbed tube or block samples obtained during field exploration. Methods for predicting consolidation settlement are presented in several introductory geotechnical texts (Spangler and Handy, 1982; Terzaghi and Peck, 1967; Bowles, 1977). Settlement of granular soils can be determined by a method devised by Schmertmann (Schmertmann, 1970; Winterkorn and Fang, 1975).

If the foundation soils are granular, loose, uniformly graded, and saturated, and could be subjected to earthquake loading, liquefaction (loss of foundation support) could result. Liquefaction-potential assessment is also discussed in geotechnical texts (Winterkorn and Fang, 1975). Low-density granular soils are best identified during field exploration, using standard penetration tests or other in-situ testing and/or field density determinations made in test pits.

3.2.1.2 Bearing Capacity --

The foundation soil that will underlie a dike or other massive structure associated with the surface impoundment should be evaluated for its bearing capacity. The bearing capacity of a foundation is the maximum loading to which the foundation soil may be subjected without permitting shear displacements detrimental to the function of the structure (Spangler and Handy, 1982). Figure 9 shows the forces and displacements that occur when the bearing capacity is exceeded. The design bearing capacity should have a safety factor of 2.5 to 3.0. Methods of determining a soil's bearing capacity are presented in several introductory geotechnical texts (Spangler and Handy, 1982; Terzaghi and Peck, 1967; Bowles, 1977). Input variables include the dike and foundation geometry, and the weight and shear strength of the soil materials.

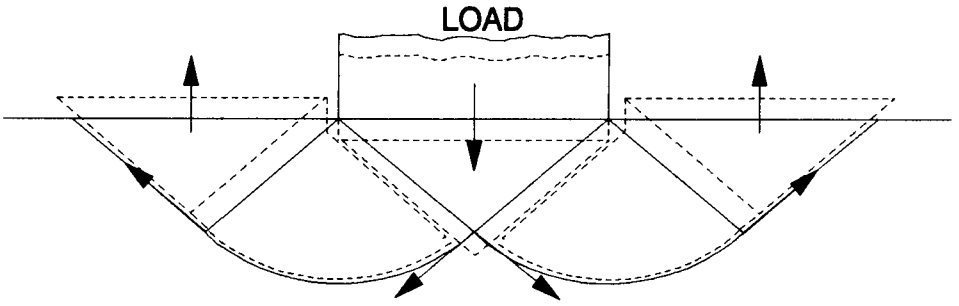

Figure 9. Forces and displacements in bearing capacity analysis (adapted from Scott, 1980)

3.2.2 Dike Design

Surface impoundments may range from completely above grade to completely below grade, but most will be a combination with an excavated portion below grade and a diked portion above grade. The excavated materials may be used to build the dike. Figure 10 is a cross-section of one side of the combination type showing the various dike and liner interfaces.

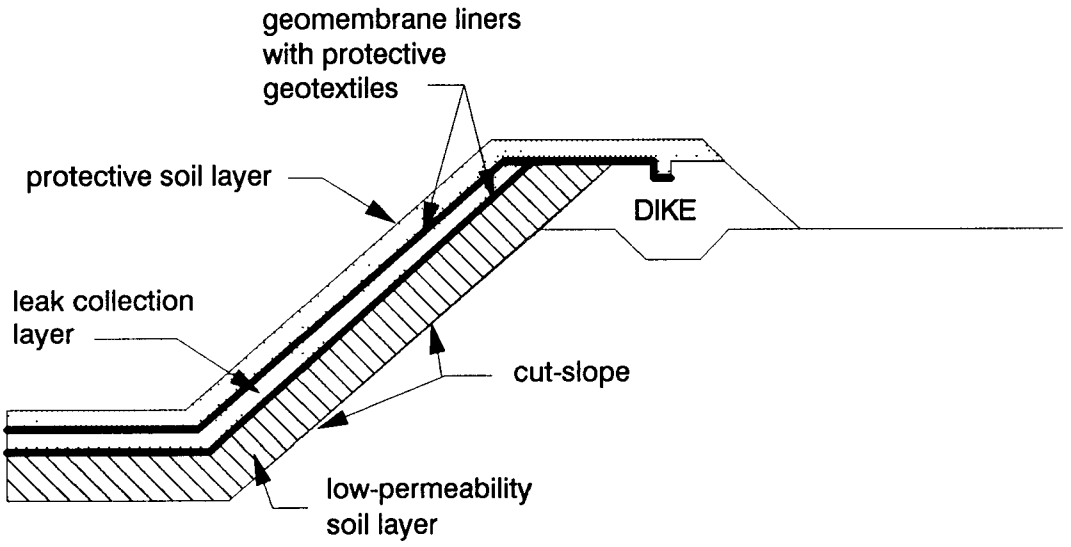

Figure 10. Surface impoundment dike and liner interfaces and layers.

A surface impoundment dike and the associated double liner comprise a relatively complex structure. Stability of the native foundation soil and internal stability of the dike proper must be considered, along with the stability of the double liner components on the inside slope of the dike and excavation. Each of the liner slope interfaces may be a plane of weakness.

Dike and foundation stability must be evaluated for the construction and operating conditions, using expected in situ engineering properties of the foundation and berm materials, pertinent geologic information (see Section 3.3), and planned dike slope and height. Side slopes of 2H:1V or flatter are usually considered adequate for maintaining dike stability. However, the slope limits for the soil liner component may be controlling for the dike. USEPA's Minimum Technology Guidance (USEPA, 1987a) for surface impoundments recommends a demonstration to show that the low-permeability soil liner on the side walls can be compacted effectively at the maximum slope used in the design (USEPA, 1987a). Soil liner slopes steeper than 3H:1V are not recommended due to the difficulty in constructing them to meet current USEPA performance standards.

Dike stability is determined primarily by the ability of the dike and foundation soils to resist shear stress. Shear stresses result from externally applied artificial loads (e.g., the impoundment contents), the internal body forces caused by the weight of the soil and dike slopes, and external forces (e.g., earthquakes). When the ability of the soils to resist shear stresses is exceeded, the result can be (1) slope failure, characterized by a failure plane or surface along which a portion

of the embankment slides; (2) excessive settlement; or (3) a bearing capacity failure. The following sections describe design against these failure modes.

3.2.2.1 Shear Strength --

The principal parameter in analyzing dike and foundation stability is soil shear strength (or shearing resistance). It is generally determined by field or laboratory tests. To obtain meaningful shear strength results from a laboratory test program, structurally undisturbed samples, representative of the in-situ soils or compacted soils proposed for the project, must be obtained for testing. For native, cohesive foundation soils, samples of "undisturbed" materials are typically used. (Soil is always disturbed to some extent when the sampling operation is performed. "Undisturbed" samples are those taken in a way to try to retain as many of, or as near to, the in-place physical properties as possible.) To determine the shear strength of soils to be used as compacted fills (dikes and liners), the soils must simulate as-constructed field conditions, including method of compaction, dry unit weight, and water content. These samples may be prepared in the laboratory, or, preferably, they are "undisturbed" samples taken from a field test fill prepared under construction conditions.

Test methods for determining shear strength in the laboratory include triaxial tests, unconfined compression tests, direct shear tests, and laboratory vane shear tests. Procedures and descriptions for such testing, and interpretation of the test results, are provided by several sources (Lambe, 1951; USACE, 1970; Head, 1980; 1982; and 1986).

Methods for determining in-situ shear strength include standard penetration, vane shear, pressure meter, cone penetrometer, and dilatometer. In-situ testing is described in several sources (ASCE, 1986; FHWA, 1980).

The shearing resistance of cohesive soils differs from that of cohesionless soils due to the following factors:

- particle size -- cohesive soils are finer
- particle shape -- cohesive soils are platy; cohesionless are rounded to angular
- permeability -- cohesive soils are less permeable and drain more slowly
- internal friction angle -- lower in cohesive soils
- plasticity -- cohesive soils more plastic

The Mohr-Coulomb failure envelopes for clays and sands are shown in Figure 11 for comparison. The value C indicated on the shear stress axis, also referred to as the "cohesion intercept,"

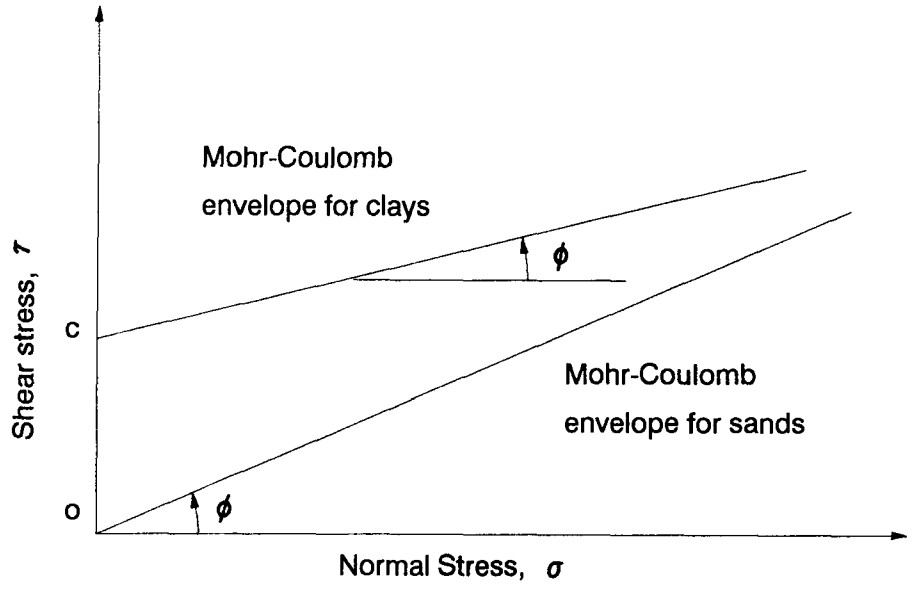

Figure 11. Mohr-Coulomb failure envelopes for clays and sands.

is due to the attractive forces between the plate-shaped particles forming cohesive soils such as clays.

Dikes are ordinarily constructed of compacted soil. A typical soil compaction curve showing the dry-unit-weight to water-content relationship for a cohesive soil is given in Figure 12a. The variation of shear strength with water content is shown in Figure 12b. Although a cohesive soil can be compacted at the same dry weight at points A and B in Figure 12a, the water content at these points would differ considerably. The shear strength of the compacted soil at A would be higher than that at B. Thus, it is necessary to prepare samples in the laboratory at values of water content and dry unit weight comparable to those of the field-compacted soils.

The structure of a compacted clay is highly dependent upon the method of compaction and molding water content, and structure has a significant influence on both shear strength and permeability in compacted soil. It is important to use a laboratory compaction procedure that would yield compacted test samples with a structure similar to that of the field-compacted soils.

Shear strength parameters appropriate to a particular analysis depend on drainage condition, stress condition, and rate of shear. The parameters fall into two general categories: (1) total stress (undrained strength parameters); and (2) effective stress (drained strength or undrained strength with pore pressure measurement parameters). In addition, pore water pressure, the

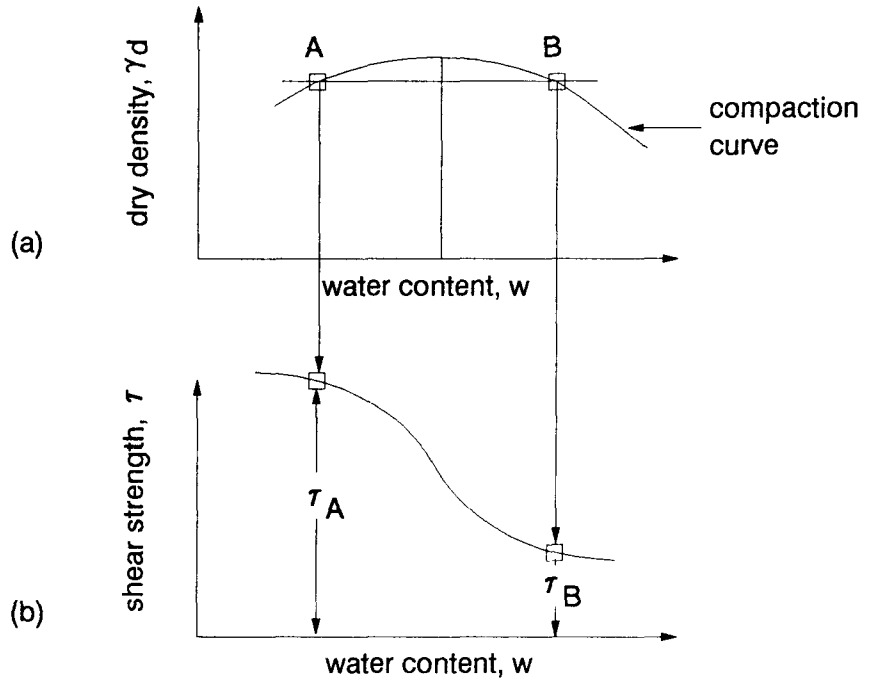

Figure 12. Typical compaction curves showing (a) dry unit weight-water content relation and (b) variation of shear strength with water content for cohesive soil.

hydrostatic pressure present in the water contained in the soil voids, affects shear strength determined by effective stress parameters. During stress application to a soil mass, the applied stress tends to compress the soil, causing an increase in the pore water pressure. This pore water pressure buildup may reduce shear strength.

The low permeability of clays causes pore-water pressure to build up during laboratory or field tests, thereby controlling the shear strength properties that are measured and used in design computations. Therefore, it becomes necessary to understand the mechanisms of pore-water pressure changes in cohesive soils when making an attempt to understand the shear strength behavior of cohesive soils. Discussions of pore pressure and shear strength relationships can be found in most soil mechanics texts (e.g. Bowles, 1984; Scott, 1980; Sowers, 1979, etc.).

3.2.2.2 Slope Stability Analysis --

A dike that includes a conservatively specified height and slope may require only a simple stability chart analysis or a

basic computer analysis. Guidelines for such conservative design embankment heights and slopes are provided by the U.S. Bureau of Reclamation (1974). A dike design that includes relatively high embankments and steeper slopes, however, may require a complex computer analysis.

Slope stability analysis techniques are well-developed. They are described in most soil mechanics text books and various references (Perloff and Baron, 1976; USACE, 1970b; Wright, 1969). The conventional stability analysis failure modes can be classified as either "circular arc" (rotational slide) or "sliding wedge" (translational slide). A third type of instability is soil "flow." The three types are depicted in Figure 13.

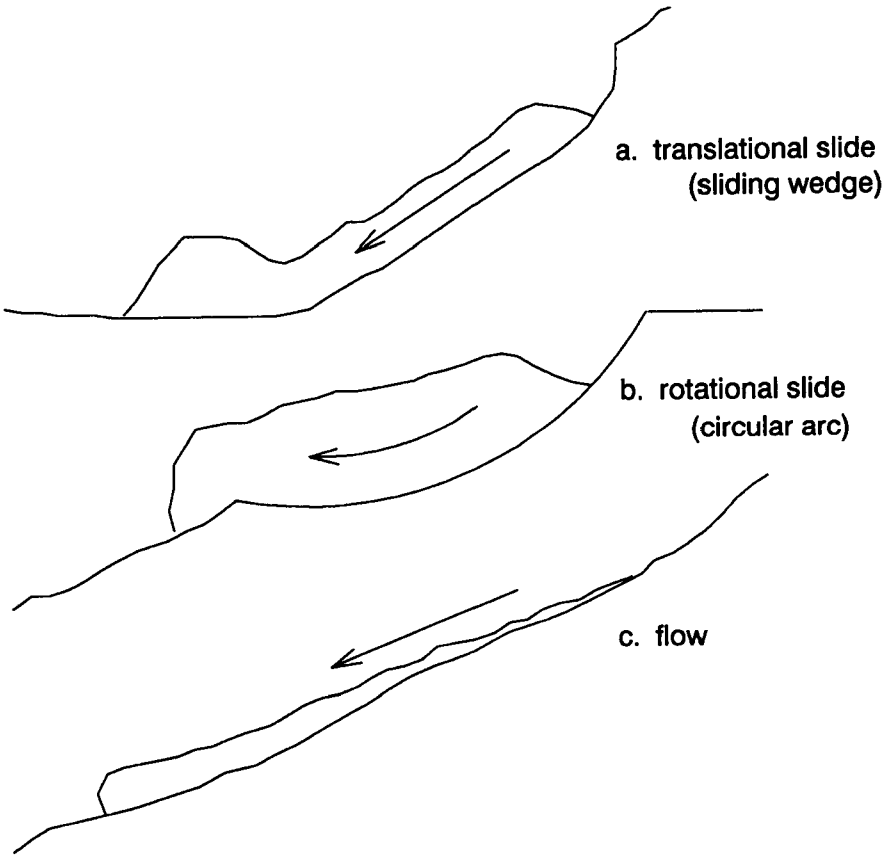

Figure 13. Types of slope instability.

Stability analysis should be performed considering the following load cases:

- end-of-construction or short-term
- steady seepage or long-term
- rapid drawdown
- seismic

Descriptions of these load cases and appropriate strength parameters for each are presented in several sources (USACE, 1970b; Sherard, 1963; Perloff and Baron, 1978). Depending on the subsurface conditions, embankment geometry, operational characteristics, and regional location of the impoundment, one or more of the noted load cases may be eliminated from the analysis.

More than 30 methods for performing slope stability analysis exist. Among these, Bishop's Modified Method and the Ordinary Method of Slices are the most commonly used for circular failure surfaces, and Spencer's Method for non-circular failure surfaces. Johnson (1975) recommends using the simplest suitable procedure, because even the most detailed of the conventional or limiting equilibrium methods is relatively crude and neglects stress-strain relationships. Several of the methods available and applicable stability conditions are listed in Table 6.

TABLE 6. CURRENT PROCEDURES FOR STABILITY ANALYSIS.

Procedure	Equilibrium Conditions Satisfied				Shape of Sliding Surface	Computation by	
	Overall Moment	Slice Moment	Vertical Force	Horiz. Force		Computer	Hand
Ordinary method of slices - Swedish method	Yes	No	No	No	Circular	Yes	Yes
Simplified Bishop	Yes	No	Yes	No	Circular	Yes	Yes
Janbu	Yes	Yes	Yes	Yes	Any	Yes	Yes
Morgenstern and Price	Yes	Yes	Yes	Yes	Any	No	Yes
Spencer	Yes	Yes	Yes	Yes	Any	Yes	Yes
Sarma	Yes	Yes	Yes	Yes	Any	Yes	Yes

These methods are applied to dike stability evaluations using computer programs and stability charts. Generally, embankments less than 10 to 15 feet (3 to 4.6 m) high can be analyzed effectively using stability charts. For higher embankments or more sensitive situations, computer analysis may be recommended and verified by the design engineer.

Software programs for personal computers are available from USEPA and other sources (e.g., Jeyapalan, 1986; Geo-Slope Programming, Ltd., 1985; and USEPA, 1986c). These programs typically include various options to handle even the most difficult site conditions.

"Geotechnical Analysis for Review of Dike Stability (GARDS)" software, developed for the USEPA (1986c), is a menu-driven software package for design review of earth dike stability. It can be used to analyze site hydraulic conditions, dike slope and foundation stability, dike settlement, and soil liquefaction potential. The program was designed expressly for the evaluation of dikes at hazardous waste disposal facilities. It is intended to help determine whether a design meets minimum safety criteria under service conditions.

Slope stability can be analyzed quickly using stability charts. The charts generally assume smooth, straight-line slopes and uniform soil conditions. They can be used to obtain approximate safety factors for most complex problems if irregular slopes are approximated by a straight line, and average values of unit weight, cohesion, and friction angle are used. Stability charts are presented in a number of geotechnical references (USACE, 1970b; Naval Facilities Engineering Command, 1982; Winterkorn and Fang, 1975).

Minimum Factor of Safety -- The recommended safety factor for a slope depends on the following:

- the degree of uncertainty in the shear strength measurements, slope geometry, and other conditions;
- the costs of flattening or lowering the slope to increase stability;
- the costs and consequences of a slope failure; and
- whether the slope is temporary or permanent.

When detailed analyses of slope stability are performed, a number of circles must be examined to locate the most critical circle, that is, the one with the lowest factor of safety. The factors may be plotted, on a dike cross-section, at the circle centers and then contoured to find the location of the minimum. Figure 14 shows two examples of the results of this procedure.

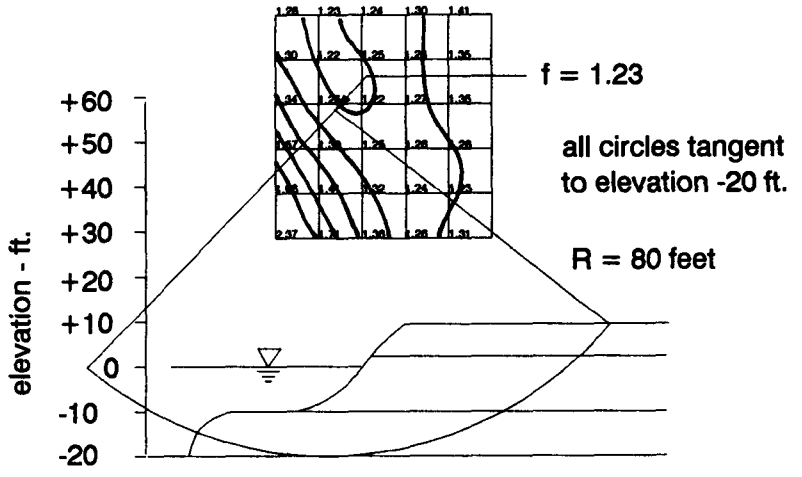

(a) Contours of f for circles tangent to elevation -20 ft.

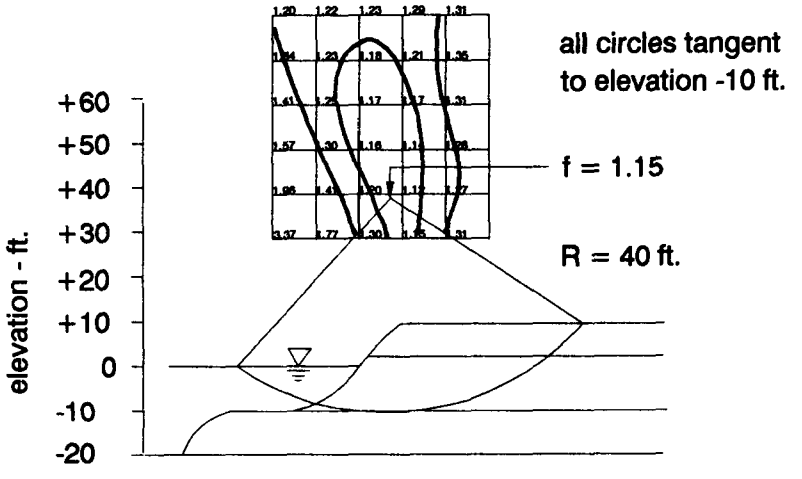

(b) Contours of f for circles tangent to elevation -10 ft.

Figure 14. Factor-of-safety contours for slope stability. (10 feet = 3.05 meters)

Factors of safety for design slopes may range from 1.4 to 2.0. The typical range for a hazardous waste surface impoundment is 1.75 to 2.0, with the actual value depending on consideration of the influence of the four items noted above.

3.2.3 Liner Systems

The liner system includes the barrier layer, the leak collection layer, and any soil protective layers.

3.2.3.1 Regulatory Constraints and Guidance --

Minimum technology requirements have not been specified under the Resource Conservation and Recovery Act for non-hazardous waste surface impoundments. USEPA is currently proposing minimum technology for non-hazardous waste landfills, but not surface impoundments, based upon a single composite liner or its performance equivalent. Similar technology would seem reasonable for non-hazardous waste impoundments, but it has not been officially proposed at this time.

The "minimum technology requirements" specified in HSWA Section 3004(o) for new hazardous waste landfills and surface impoundments, require a double liner with a leak detection and collection layer placed between the liners. The double-liner system must prevent the migration of hazardous constituents through the liner during the impoundment's active life and post-closure care period. USEPA's guidance on the minimum technology requirements (USEPA, 1987a) identified two acceptable double-liner system designs that would meet the HSWA requirements:

- Geomembrane/Composite Double-liner System (Figure 15)
- Geomembrane/Soil Double-liner System (Figure 16)

A double-composite liner may also be used (Figure 17).

A "composite" liner in the guidance is a two-component liner, a geomembrane installed directly on a smooth-surfaced low-permeability soil component, with the two components acting as a unit. The two-component composite liner is the bottom secondary liner of a double-liner system. The top primary liner of the double-liner system is a geomembrane. The drainage (leak detection) layer separates the two liners.

Careful consideration must be given to the relatively low friction angle between the geomembrane and the low-permeability soil, especially for the possibility of moisture collecting between the layers. At the same time, attention must be given to the contact between the geomembrane and the low-permeability soil. The soil surface should be smooth and the contact with the geomembrane as continuous as possible to minimize any potential flow along the interface.

The double-liner system must prevent leakage through the secondary liner of the system for the active life of the impoundment and the post-closure care period. More

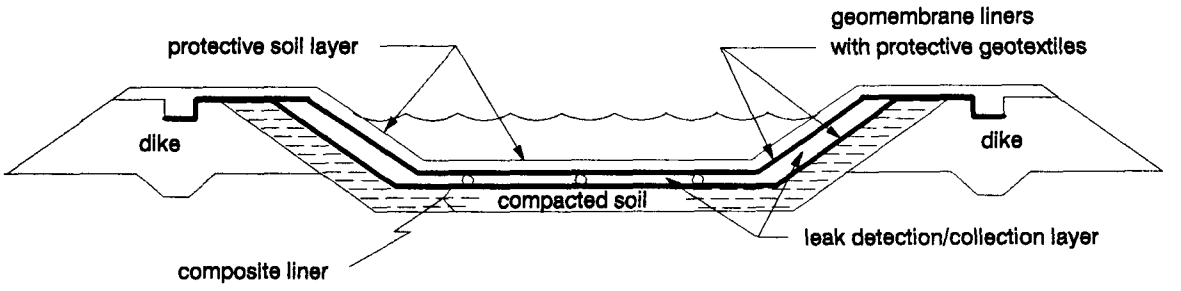

Figure 15. Cross section of double liner with composite bottom liner.

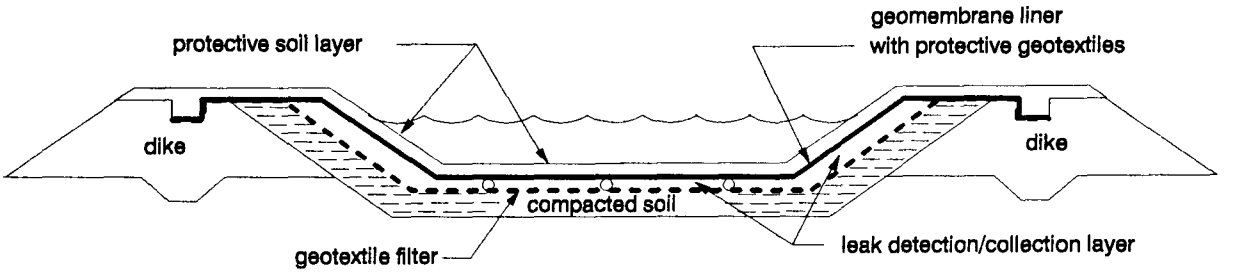

Figure 16. Cross section of double liner with soil-only bottom liner.

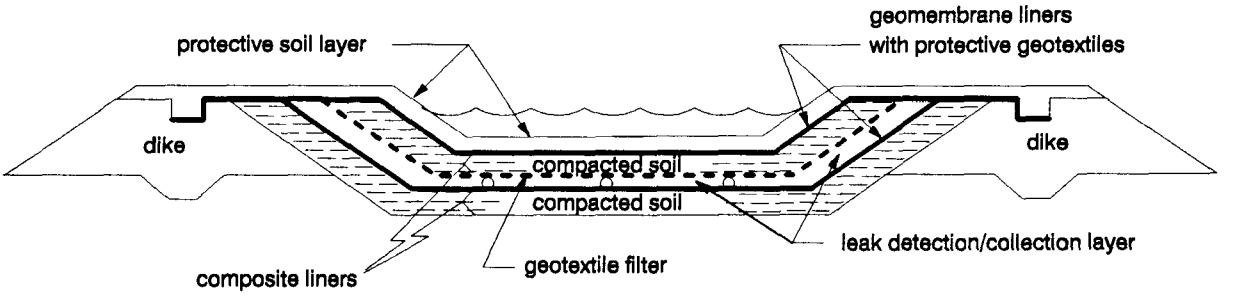

Figure 17. Cross section of double composite bottom liner.

specifically,the double-liner system must prevent migration of contaminants into the primary liner and through the secondary liner during the active life and post-closure monitoring period.

The hydraulic head of liquid above the secondary liner (within the drainage layer) of a double-liner system typically has a non-zero value (Giroud, 1985). This indicates that the primary liner does, in fact, leak. A leak-collection (drainage) layer between the primary and secondary liners, that allows liquids to drain freely to a pumpout unit, will minimize the hydraulic head on the bottom liner and thus will lessen any potential leakage through it.

USEPA has described the interaction of the leak-collection system and the composite bottom liner in the process of detecting, collecting, and removing any contaminant leakage through the top liner (USEPA, 1987g). It was shown that the composite (geomembrane/clay) liner significantly improved the leak detection capability for small leaks (leaks less than 1 gal/acre/day [9.35 liters/hectare/day). Even with small holes in the geomembrane component, the collection efficiency is not significantly reduced. On the other hand, the EPA report suggests that a clay liner alone, meeting the 3.9×10^{-8} in./sec (1×10^{-7} cm/sec) criterion, would absorb a leak on the order of 80 gal/acre/day (748 liters/hectare/day). It is possible then that only a leak in excess of that rate would be detected in the sump of the leak-collection system above a clay liner. Further, USEPA believes that the liquid absorbed in a soil liner will eventually be released to the environment.

Even though a soil liner may not be effective in preventing contamination from eventually escaping the facility, it will minimize leakage through a breach in the adjacent geomembrane component. In addition, it will attenuate migrating waste constituents, provide protective bedding for the geomembrane, and provide a long-lasting stable foundation for the impoundment.

Careful attention must be given to the sliding potential of the geomembrane on the low-permeability soil layer. It is not appropriate to include a geotextile at the interface, because it would destroy the compression seal intended between the geomembrane and soil.

3.2.3.2 Geomembrane/Composite Double Liner --

As noted above, the geomembrane/composite double-liner system consists of two liners -- a top primary geomembrane liner and a bottom secondary geomembrane/soil composite liner, separated by a leak-collection system (Figure 15). USEPA's minimum technology guidance (USEPA, 1987a) recommends that the primary geomembrane be at least 30 mils (0.76 mm) thick where

covered by a protective soil and/or geotextile layer. For an uncovered geomembrane, a thickness of at least 45 mils (1.14 mm) is recommended. The guidance suggests that thicknesses of 60 to 100 mils (1.52 to 2.54 mm) may be required to resist various stresses. In any case, the design engineer should recognize that some geomembrane materials may require greater thicknesses to prevent failure or to accommodate unique seaming requirements. It may be possible to use combinations of geotextiles and geomembranes in lieu of increasing the geomembrane thickness in some instances.

All liner and leak-collection components must be chemically resistant to the waste handled at the facility. Chemical compatibility of geosynthetic materials should be tested using EPA Method 9090. Past test data or actual performance data may be used in lieu of new testing if the materials and wastes can be shown to be the same in both the past and new applications.

As noted above, in the composite secondary liner, the geomembrane upper component and a low-permeability-soil lower component should be in direct and uninterrupted contact. The interface should be smooth and designed and constructed to provide a compression connection between the two components to minimize lateral flow between them, should a hole develop in the geomembrane. Attaining the desired contact is difficult because of the near impossibility of completely flattening all imperfections on the soil surface. It requires careful compaction and construction quality control to minimize the imperfections (Giroud & Bonaparte, 1989).

The low-permeability-soil component of the composite liner should be at least 36 inches (90 cm) thick and have an in-place hydraulic conductivity of 3.9×10^{-8} inches/sec (1×10^{-7} cm/sec) or less. These characteristics have been chosen by USEPA as those that will prevent contaminant breakthrough during the active and post-closure period, when the liner is constructed ideally (USEPA, 1987a).

The leak-collection system is generally a layer of highly permeable sand or synthetic material extending across the bottom and up the sides of the impoundment between the liners. The hydraulic conductivity of the leak-collection system should be at least 2 ft/min (1 cm/sec) for sand. The transmissivity of a geosynthetic layer should be at least 3.3×10^{-2} ft^2/sec (3×10^{-3} m^2/sec). A series of drain pipes, a sump, and pumps are also included in the system to facilitate rapid removal of liquid.

3.2.3.3 Geomembrane/Compacted Soil Double Liner --

In accord with USEPA's minimum technology guidance, the geomembrane/compacted soil double-liner design consists of a

primary geomembrane liner placed above a secondary low-permeability-soil liner, separated by a leak-collection system (Figure 16). It is very similar to the geomembrane/composite double-liner system described above, except that it does not contain the geomembrane component in the secondary liner. The primary geomembrane liner has the same recommended minimum thickness and chemical compatibility as the primary geomembrane liner of the geomembrane/composite liner system. The low-permeability-soil secondary liner thickness depends on site- and design-specific conditions, but should not be less than 36 inches (90 cm) thick, according to the guidance.

Although USEPA (1985b) recommends a 36-inch (90-cm) minimum thickness, the Agency believes that a low-permeability-soil liner of that thickness with a hydraulic conductivity of 3.9×10^{-8} in./sec (1×10^{-7} cm/sec) may not prevent constituents from migrating through the liner prior to the end of the post-closure care period. Note here again that USEPA has concluded that a well-constructed soil liner will allow contaminated liquid to be absorbed, and eventually released, at a rate on the order of 80 gal/acre/day (750 liters/hectare/day) or more (USEPA, 1987g). Therefore, documentation supporting the use of a particular thickness is required and should include responses to the reservations expressed by USEPA (1987a) that such a design meeting the no-breakthrough requirement is neither economically or technically feasible. USEPA states that conservative assumptions should be used to estimate the necessary low-permeability-soil liner thickness, due to the lack of precision with which such estimates can be made (USEPA, 1987a).

The leak-collection (drainage) layer in the geomembrane/soil double liner system is essentially the same as the leak-collection layer in the geomembrane/composite double-liner system described above. In this case it is placed directly on the low-permeability-soil layer, preferably with a geotextile separating them.

3.2.3.4 Double Composite Liner --

A further variation of the double liner is a system comprised of two composite geomembrane/compacted soil layers (Figure 17). USEPA (1987h) recently noted that many owners and operators of landfills and surface impoundments have indicated that they planned to use a composite liner for the top liner as well as the bottom liner.

In a double-composite-liner system, the liners are separated by a leak-collection layer, no different than those of other double-liner designs, except for the insertion of a separation layer at the top of the leak-collection layer. The separation

layer would prevent the migration of the primary soil liner component material into the underlying leak-collection layer. The layer also serves to stabilize the surface of the drainage layer, facilitating compaction of the overlying soil component. Methods for evaluating the effectiveness of geosynthetic filter and separation layers have been discussed in at least three documents (USEPA, 1987c; FHWA, 1985; and Koerner, 1990).

While a double-composite liner should offer further assurance against the escape of contaminated liquid, it is not without its own risks. It appears possible for the primary geomembrane liner to develop a leak that would not drain freely through the soil component to the leak-collection layer. Liquid might thus accumulate between the geomembrane and soil components and go undetected for a long period. On the other hand, this is not altogether contrary to the purpose of the top composite liner's soil component, which would be to impede leakage to the drainage layer.

The following sections discuss design criteria for various components of multiple-layer liner systems.

3.2.3.5 Multiple-Layer Liner Materials and Specifications --

The principal materials used, and recommended by the USEPA for use, in the construction of liner systems for hazardous waste surface impoundments are geosynthetic materials and soils. Types of each are used to impede liquid movement. Other types are used to facilitate liquid movement and removal. Still others are used to prevent one layer from intruding upon another, or to protect other layers from damage by construction, operation, or weather.

Geomembranes -- The USEPA believes that surface impoundment structures must include the use of geomembranes. They are considered by the Agency to be the only practicable means of preventing the migration of chemicals into and through the impoundment liners during the active life and post-closure periods. However, they must be carefully selected for waste compatibility, strength, and constructability in the specific design situation. Geomembranes are not intended to be stress-bearing members, and the design should avoid stressing the material as much as possible.

Since hazardous waste regulations and proposed regulations for municipal solid waste require that the final cover be as impermeable as the liner, geomembranes are also recommended in the final cover for surface impoundments (see Section 7.0), when they are closed as landfills. In this case, a geomembrane is used as the barrier to prevent entry of percolating water to the underlying contaminated material. USEPA's minimum technology guidance for landfill covers describes cover designs using a

geomembrane as the principal barrier (USEPA, 1989a). The geomembrane need not necessarily be of the same composition in both the liner and cover.

Geomembranes are manufactured using low-permeability synthetic polymers, either non-reinforced or reinforced with fabric material. Geomembranes are made with various base polymers and additives, thus varying considerably in their physical and chemical properties and their interactions with different wastes. No geomembrane is applicable to all wastes; a particular type must be selected for each application.

The base materials of geomembranes are high-molecular weight compounds (polymers). Some common polymers presently in use as base products for geomembranes follow:

- thermoplastics (e.g., polyvinyl chloride [PVC])
- crystalline thermoplastics (e.g., high density polyethylene [HDPE])
- thermoplastic elastomers (e.g., chlorosulfonated polyethylene [CSPE])
- elastomers (e.g., butyl rubber); limited availability

Kays (1987), Giroud (1985), and USEPA (1983b) detail the processing and manufacturing techniques used in producing geomembranes. USEPA has provided detailed technical information about geomembrane materials used to contain specific types of hazardous wastes (USEPA, 1983b and 1988a). Geomembranes and their polymers continue to improve as their manufacturers and users gain experience in waste containment. Indestructability and constructability are two general goals difficult to achieve in the same material.

The compatibility of a liner material with a specific waste is an important consideration in planning a surface impoundment. Liquid wastes in surface impoundments may vary from complex mixtures of variably concentrated constituents to highly concentrated contaminants contained in a relatively simple matrix. Additionally, waste constituents may change over time. During the liner design process, a representative sample of the liquid waste should be analyzed for waste properties that could potentially cause damage to liner material. Several methods for obtaining samples of hazardous wastes have been discussed by USEPA (1982). Potentially detrimental waste properties include the following:

- acidity;
- alkalinity (greater than pH 10);
- temperature extremes; and
- hydrocarbons.

For hazardous waste surface impoundments, effective waste containment is required for an extended length of time, including the active impoundment life plus (if the unit is closed in place) a 30-year post-closure period. Testing may be necessary to determine the long-term effect of the impounded wastes on the liner. Performance history and existing test data may preclude site-specific testing in those cases where the waste has not changed characteristics and the same geomembrane material (essentially identical formulation) is used.

Test and/or performance data must be provided with the permit application. Tests should be conducted using representative samples of waste and leachates to which the liner is to be exposed. USEPA has developed Test Method 9090, "Compatibility Test for Wastes and Membrane Liners." This test is intended to facilitate the estimation of the long-term compatibility of liner material with wastes by immersing liner samples in the waste for 30, 60, 90, and 120 days at 23 ± 2°C (73 ± 3.6°F) and at 50 ± 2°C (122 ± 3.6°F). A comparison of specific physical properties of the geomembrane determined before and after immersion is then made to determine suitability of the liner. This test does not address all relevant variables, but does provide a uniform method of testing geomembrane materials. USEPA has published other compatibility test methods and a list of liner manufacturers and material sources (USEPA, 1988a).

Geomembranes used in hazardous waste surface impoundments are susceptible to failure during facility operation. Giroud and Ah-Line (1984) discuss two basic types of geomembrane failure: (1) excessive geomembrane displacement (i.e., vertical or lateral movement) and (2) an unacceptable leak. Geomembrane liner design should specify material components and construction practices to prevent failures by:

- protecting the geomembrane from puncture, scratching, abrasion, or other damage (from above and below);
- demanding that great care be taken to prevent damage to the geomembrane sheet during <u>all</u> installation processes;
- providing gas venting in the drainage layer;
- avoiding bridging, rippling, stretching, or other stressed conditions;
- allowing slack for shrinkage;
- avoiding nonessential penetrations;
- eliminating tensile stresses as much as possible, by design;

- providing detailed and rigorous seaming instructions;
- providing slip-preventing anchorage the tops of slopes;
- requiring well-trained and experienced installation personnel; and
- providing a detailed quality assurance plan.

Design details for geomembranes and other geosynthetics to resist various stresses have been provided by USEPA (1987c) and Koerner (1990). Protective layers such as soil or geotextile can help guard against damage to the geomembranes.

Geomembrane Protective Layers -- A protective layer of soil or a soil/geotextile layer may be used on the surface of the liner system to protect the underlying geomembrane from construction damage during installation, loads imparted by the waste, weathering, erosion and abrasion, to increase friction, and to dampen potential chemical attack. Above the liquid level of the impoundment, coarser-grained (sometimes rubble) material placed over a geotextile protective layer is often used. The coarse material will generally be more stable on steeper slopes and will dampen wave action and run-up. An even coarser layer (e.g., riprap) may be applied over the geomembrane-protective layer to prevent erosion in larger impoundments. Below the liquid level, sand is often used to protect the geomembrane against puncture, and to dampen the effects of strong chemical or high-temperature waste inputs. A cross section showing some protective layer options is shown in Figure 18.

Based on field experience, USEPA (1983b) recommends that protective soil on a liner be placed at no greater than a 3H:1V slope and that it be at least 18 inches (45 cm) thick before allowing any construction equipment over the liner. Slope stability may be a problem with soil placed directly on the geomembrane. Mitchell et al (1989) have examined geomembrane-soil interfacial stability and have concluded that the design should incorporate the effect of pore-water pressure. A geotextile can reduce pore-water pressure at this interface. The recommended general equation for determining the stability is:

$$FS = \frac{[(\gamma z \cos \beta) - \mu] \tan \phi}{\gamma z \sin \beta}$$

where FS = factor of safety
γ = soil density (including moisture)
z = soil depth perpendicular to the geomembrane
β = slope angle
ϕ = interfacial friction angle
μ = pore-water pressure

A factor of safety of at least 1.5 is recommended.

Geotextiles may be used at various places in the liner system as protective layers and, where appropriate, as slide-resistant interface materials between soil and geomembranes. On the top (primary) geomembrane liner, a geotextile may be used to shield the geomembrane from any larger, sharper particles in the overlying soil protective layer. A geotextile layer can be used to reduce the thickness of the soil protective layer from 18 inches (45 cm) to perhaps 12 inches (30 cm). Geotextiles may also be used between that geomembrane and the drain layer material, and again at the bottom of the drain layer atop the second geomembrane as shown in Figure 18. Nonwoven geotextiles ordinarily have excellent protection properties, making them ideal for these applications. In general, the greater the mass per unit area, the greater the protection afforded by the geotextile.

The exterior dike slope may be protected by riprap, vegetation, or other stabilizing material to prevent erosion. Vegetation requires planting a suitable plant species and maintaining it. Several references are available to assist in establishing vegetation (e.g., USEPA, 1979b and 1983g; Lee et al,

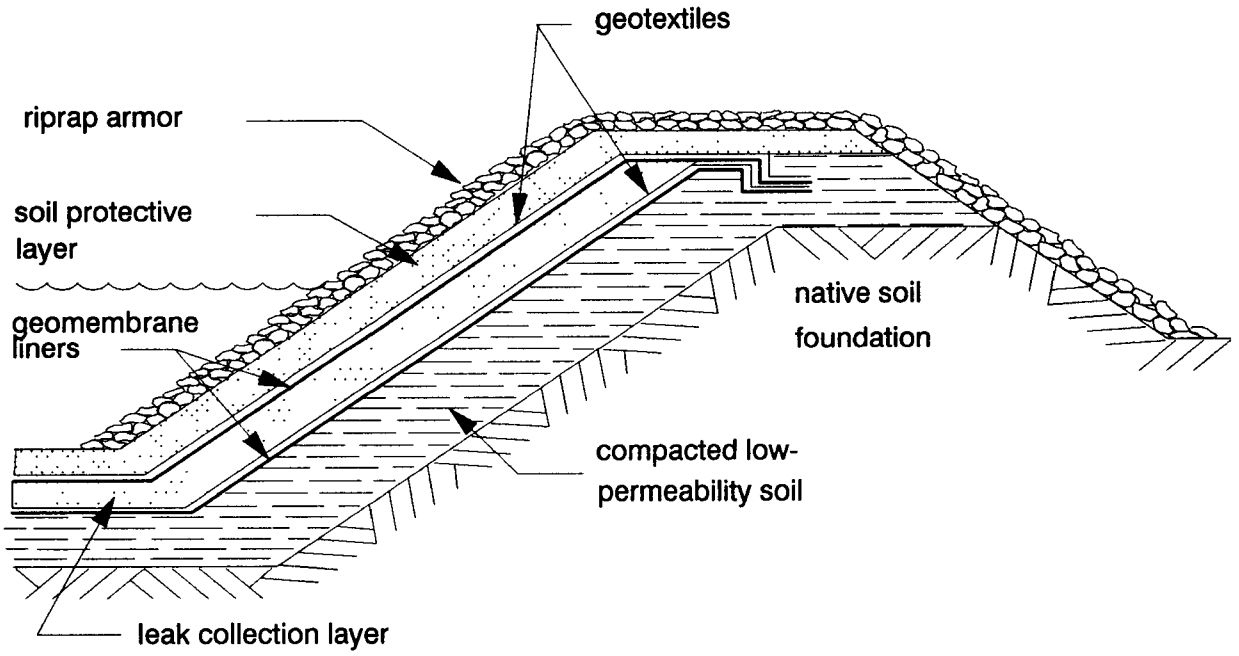

Figure 18. Impoundment dike cross section showing optional protective layers.

1985). Riprap consists of graded rock courses and a geotextile filter placed directly on the dike. Riprap has many advantages, including flexibility, ease of repair, simple construction, and salvageability. Battelle Pacific Northwest Labs (1982), the U.S. Bureau of Reclamation (1974), and Barron (1977) discuss the design of riprap coverings. FHWA (1985 and 1988) and Koerner (1986) have reviewed geotextile design for erosion protection.

Although not common, other materials may be used for dike protection. They include concrete, asphalt, and soil cement. Weather resistance, and resistance to the contained waste where in contact with it, must be carefully considered before designing with these materials.

Low-Permeability Soil Liners -- The purposes of the low-permeability soil component of the secondary liner are (1) to minimize the migration of hazardous liquids through the geomembrane component if a breach in the geomembrane should occur and (2) to attenuate constituents that might leak through the geomembrane.

Soil liners are not impervious, but they do control seepage and have been used, because of that and their low cost, in the past as the sole liner in surface impoundments and landfills. Soil may be treated, remolded, and/or compacted to achieve prescribed flow-impeding and contaminant-attenuating specifications. However, the USEPA does not believe that a soil liner can ordinarily be constructed to meet, by itself, the requirement of no contaminant breakthrough during the active life and post-closure monitoring period for a surface impoundment.

Despite USEPA's wariness of the impermeability of soil liners, they are still recommended in USEPA's minimum technology guidance as backup to the geomembrane component of the secondary liner in the required double-liner system. Further, low-permeability soil may be used as the secondary liner without the geomembrane if it can be shown that it will provide equivalent performance and not allow contaminant breakthrough during the active life and post-closure monitoring period. The Agency believes that such a showing will be very difficult.

Waste fluids or leaked fluids may substantially increase the overall permeability of a soil liner, which then will not meet the design requirements (USEPA, 1983b). USEPA (1983b) provides guidance on evaluating the effects that waste fluids may have on the permeability of soil liners. Selection of soil liner material should include testing the material with a standard aqueous permeant (e.g., site ground water or a 0.01 Normal solution of $CaSO_4$) and a representative sample of the waste liquid to be impounded. Distilled water is not a good aqueous

permeant because it tends to react with clay particles, resulting in an unnaturally low permeability (Olsen and Daniel, 1981).

The material chosen for the low-permeability soil component should be compactable to uniform hydraulic conductivity values no greater than 3.9×10^{-8} in./sec (1×10^{-7} cm/sec). Elsbury et al (1985) found from a survey of hazardous waste disposal facilities that liner soils are generally selected on the bases of grain-size distribution, liquid limit (LL), plasticity index (PI), and laboratory hydraulic conductivity. In that survey, soils used to construct low-permeability soil liners consisted predominantly of the clay groups designated by CL (low-plasticity clay) and CH (high-plasticity clay) in the USCS. LL and PI values were generally in the range of 20 to 45 percent and 5 to 30 percent, respectively. Table 7 lists typical soil liner design specifications.

The USEPA uses the term "low-permeability soil" so as not to imply that there is a narrow restriction on the type of soil that may be used. The term "clay liner" is used casually to refer to any soil liner, but the liner may, in fact, be comprised for the most part of materials other than clay. Also, a sandy soil may be made to meet very low permeability requirements with the addition of only a small percentage of bentonite.

The performance of the soil selected for the design can be verified in a test fill. The test fill data should demonstrate whether a structurally stable soil liner component with uniform hydraulic conductivity of 3.9×10^{-8} inches/sec (1×10^{-7} cm/sec) or less is attainable using the soil, construction equipment, and methodology specified in the design. USEPA (1988b) describes some of the techniques used in constructing and testing a test fill. Data from test fills can be used to evaluate the relationships between density, water content, and hydraulic conductivity, and to validate design and construction procedures (Mundell and Bailey, 1985).

USEPA's minimum technology guidance (1987a) recommends that the soil component of the secondary liner have a thickness of at least 36 inches (90 cm) and be chemically resistant to the impounded waste. The guidance also states that the soil should be compacted in lifts of 6 inches (15 cm) or less, after compaction, and be free of rocks, roots, and rubbish.

The finished surface of the soil component must be as smooth as possible to facilitate continuous contact with the overlying geomembrane.

TABLE 7. TYPICAL OPTIMUM SOIL LINER DESIGN SPECIFICATIONS.

Property	Specification	Test Method/Reference
Thickness	Minimum 36 in. (90 cm) measured perpendicular to slope and compacted in 6-in. (15-cm) lifts.	EPA (1987a)
Grain Size	>50% by weight passing 200 mesh; >25% clay content (0.002 mm)	ASTM D 422-63
Hydraulic Conductivity (laboratory)	$<1 \times 10^{-7}$ cm/sec (3.9×10^{-8} in./sec) when compacted to anticipated field density and moisture content.	Daniel et al (1985) EPA (1983c)
Hydraulic Conductivity (field)	$<1 \times 10^{-7}$ cm/sec (3.9×10^{-8} in./sec)	Day and Daniel (1985) Anderson et al (1984)
Liquid Limit	24 - 60	ASTM D 4318-84
Plasticity Index	10 - 30	ASTM D 4318-84
Compaction	>95% Standard or >90% modified Proctor density	ASTM D 698-78 or ASTM D 1557-78
Maximum Clod Size	< 1 in. (2.5 cm)	Observational
Frost Susceptibility	0.039 - 0.31 in./day (1 - 8 mm/day)	Chamberlain et al (1982)
Volume Change	<10%	Holtz (1965)
General	Liner should be free of all organic matter (e.g., vegetation, wood), large stones, and construction debris.	

Leak Detection and Collection System -- 40 CFR 264.221 requires a leak detection, collection and removal system between the liners, including the sidewalls, of the double-liner system. It must perform its function during the active life and post-closure care period of the impoundment.

The leak collection system should incorporate a granular or synthetic drainage layer designed to rapidly detect, collect, and remove liquid that migrates into the space between the liners. The system should be designed so that little or no liquid head will ever be present to impinge on the bottom (secondary) liner.

Excessive head in the leachate collection system can result in liquid "whales" in the upper liner (USEPA, 1989b). The head would be caused, at least partially, by ground water infiltrating from a high water table. After the collection system along the bottom has been saturated and pumpout is inadequate, water can rise rapidly along the side slopes. Whales may also be caused by gas buildup beneath the primary liner. Either type is less of a concern with double liners than with older single liners.

A minimum bottom slope of 2% should be specified for the secondary liner to facilitate drainage in the collection layer to the pumpout sump. That layer should have a minimum hydraulic conductivity of 2 ft/min (1 cm/sec) and should operate without physical or biological clogging. Granular materials should be USCS-classified as "SP", without fines that may clog the layer, and with grain sizes no larger than 3/8-inch (0.95 cm) if placed directly on the secondary geomembrane liner. A geotextile layer can be placed between the drainage layer and geomembrane to facilitate placement of the granular layer and to reduce the potential for damage to the geomembrane.

The drainage layer materials should be chemically resistant to the waste contained in the surface impoundment, and of sufficient strength and thickness to prevent collapse from the expected overburden pressures. This makes granular drainage especially attractive. Drain pipes of appropriate size and spacing must be located in the bottom of the unit to remove liquids that may collect there. Larger diameter pipes have been recommended (e.g., 6 inches [15.2 cm]) because they offer greater protection against clogging and are simpler to inspect and maintain. Guidance concerning appropriate drain-pipe sizing and spacing has been provided by USEPA (1983a).

Geosynthetic drainage layer materials, available in a variety of configurations, can be used in place of the granular layer. Several of the available materials have been described by Koerner (1990). If used, they must be demonstrated as equivalent in performance to the conventional granular system with pipes. Equivalence in flow capacity equates to a transmissivity of 3 x

10^{-3} m^2/sec (0.032 ft^2/sec) for the geosynthetic material. Geosynthetic drainage materials must also be chemically resistant to the waste and leachates, have no detrimental effect on the geomembrane liners, and withstand the designed loads.

Geosynthetic drainage and filter materials may creep and deform under load, resulting in gradual restriction of flow capacity over time. Design should be based upon laboratory transmissivity tests of the proposed material over time under loads equivalent to and exceeding the expected overburden. A minimum design ratio (factor of safety) of 3.0 for loading has been suggested by USEPA (1987c) to maintain the required transmissivity.

Some impoundment designs use synthetic (e.g., "geonet") drain layers on the side slopes and granular layers on the bottom section (Figure 19). Geosynthetic material is easier to install and may be more stable (with anchorage) on the side slopes and, because it is thinner than a granular layer, allows greater waste containment capacity within an impoundment of the same overall dimensions. A geotextile layer may be placed on either side of the drain layer to prevent creep of the geomembrane into the drainage material, lowering the capacity (see Figure 42). Anchorage for geosynthetic drainage material is usually similar to the anchorage used for the geomembranes and may perhaps be the same trench used for one of them.

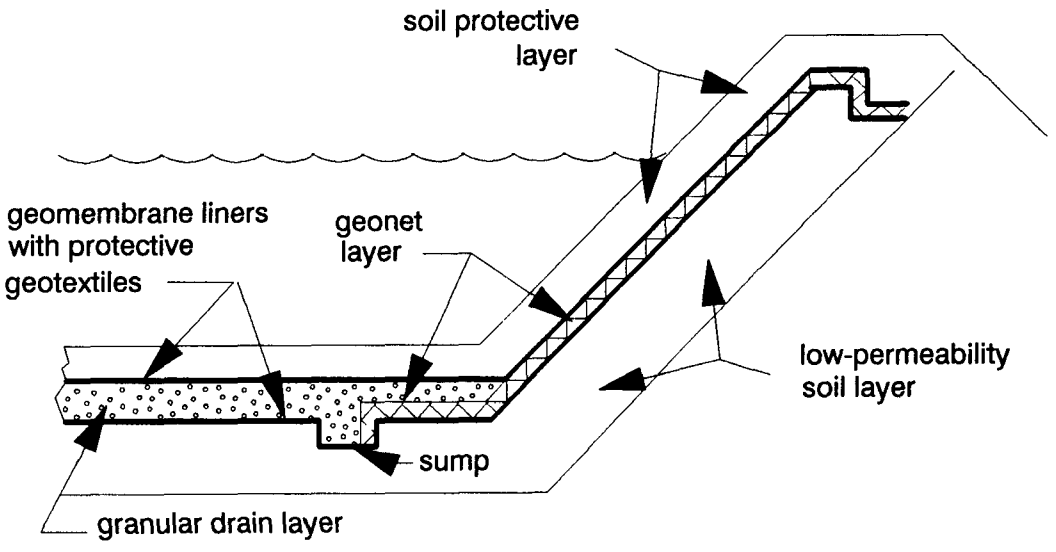

Figure 19. Junction of side-wall geonet and bottom granular layers of leak detection, collection, and removal system.

The system design should include an appropriately sized sump, with a depth of at least 12 inches (30 cm) below the drainage layer grade, to collect and remove liquids. If possible, the pumpout and sampling system should be routed up the side walls and not penetrate the top liner until well above the liquid level (Figure 20). Again, all system components should be designed with materials resistant to the waste being contained in the impoundment. Provision should be made for measuring and recording the liquid volumes collected in the sump, and for disposal of the liquid. Operating procedures for handling liquids collected in leak detection/collection systems are discussed in Section 5.1.2.

Access to all parts of the system should be provided to facilitate inspection and maintenance of components. Manholes and cleanouts should be placed so that maintenance equipment can reach any pipe section. Bass (1985) summarizes the state-of-the-art information on system failure, concerning leak collection system design, construction, inspection, maintenance, and repair.

Geotextile Filter -- Geotextiles are used as filters to prevent fine-grained soils and solids from the waste from entering and clogging the leachate collection system.

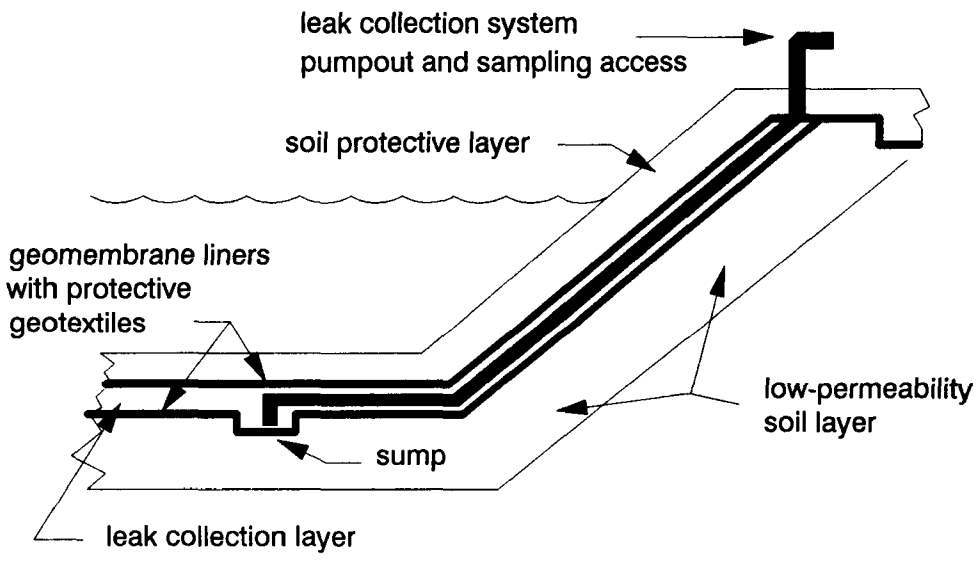

Figure 20. Example access for leak collection system and liquid removal.

Geotextiles, as filters, are placed adjacent to both synthetic and granular drainage layers. Adequate performance will depend on proper selection of the geotextile in relation to its compatibility with the material that is to be filtered. Detailed design of geotextile filters is described by USEPA (1987c), FHWA (1985), and Koerner (1990). Design basically consists of selecting a geotextile whose largest opening, as measured by its "apparent opening size" (AOS), is smaller than the larger of the particles to be filtered, as measured by the d_{85} of that material times a retention factor (λ), i.e.,

$$AOS = d_{85}/\text{factor of safety}$$

The flow rate through the geotextile, as measured by its permittivity, ψ , is then selected to be greater than the flow from the soil times a factor of safety, usually 10 or greater. The clogging potential of the filter is then evaluated based on the fines in the material to be filtered and the type of geotextile. Clogging potential is best evaluated through long-term flow tests using a simulated cross section and leachate.

Other important considerations include physical durability (it must survive construction activities) and chemical and biological resistance to the environment of the impounded waste. One reference for the minimum physical requirements for separation and drainage applications is the AASHO-AGC-ARBTA Task Force 25 set of specifications, as published in "Geotextile Design and Construction Guidelines" (FHWA, 1990).

Gas-Venting Layer -- A gas-venting layer should be considered in the design beneath the bottom (secondary) liner, between it and the foundation. It would be appropriate where the foundation material contains biodegrading organic material or other sources of gas. The material used for the venting layer should be similar to that used for the leak collection layer. It may be either granular or geosynthetic material. Thick geotextiles, with the capacity for in-plane transmission, may be considered where gas generation is anticipated to be low. Geonet strips may be inserted at regular intervals to increase flow capacity and facilitate venting. Gas exits from the venting layer should not penetrate the liners. Instead, wherever possible, they should be brought to the surface outside the side-slope liner (Figure 21).

3.3 LIQUID LEVEL CONTROL

Perhaps the greatest environmental risk in surface impoundment operation is unintentional liquid overflow. Reliable liquid level controls are critically important. Two are

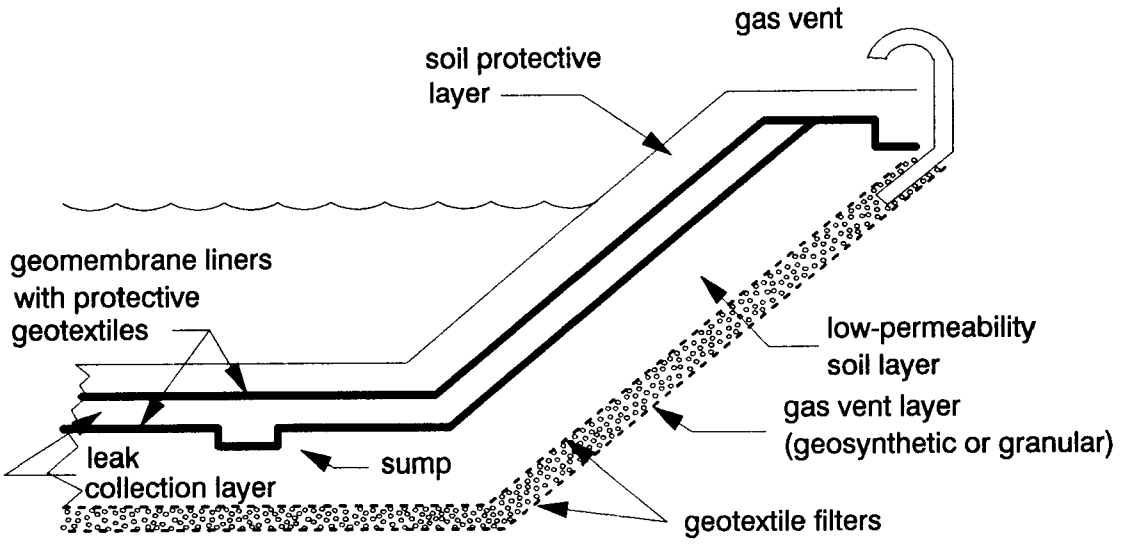

Figure 21. Liner system showing gas-vent layer and exit through top of dike.

required, passive (spillway or overflow pipe) and active (level-actuated pump or valve). For detailed information on liquid level controls, the following references are recommended: Linsley and Franzini (1979), Considine (1974), and Hicks (1972), and Shiver et al (1985).

Unless a passive outfall is part of an intended flowthrough process, it should be designed only as an emergency outlet to prevent a breach in the dike in case of an uncontrolled liquid rise. Spillways or weirs are preferred (Figure 22). Pipe or conduit outlets through the dike (Figure 23) are not generally recommended because seepage may occur around the conduit, leading to soil displacement and possible dike failure. A leak plate, as shown in Figure 23, may be placed within the dike to interrupt possible flow and channel creation along the pipe-soil interface.

Liquid releases from a hazardous waste surface impoundment via a passive outfall operating as a safety valve constitute an emergency situation. Potential releases should be considered in the design. Containment for such releases, such as a secondary perimeter dike, should be provided.

The surface impoundment design must also include a system to monitor liquid level. The system may vary from a manually-read guage (Figure 24) to a liquid-level detection, monitoring, and control system designed to operate as an automated system that detects, monitors, and controls the liquid level with little manual assistance, other than routine maintenance and calibration.

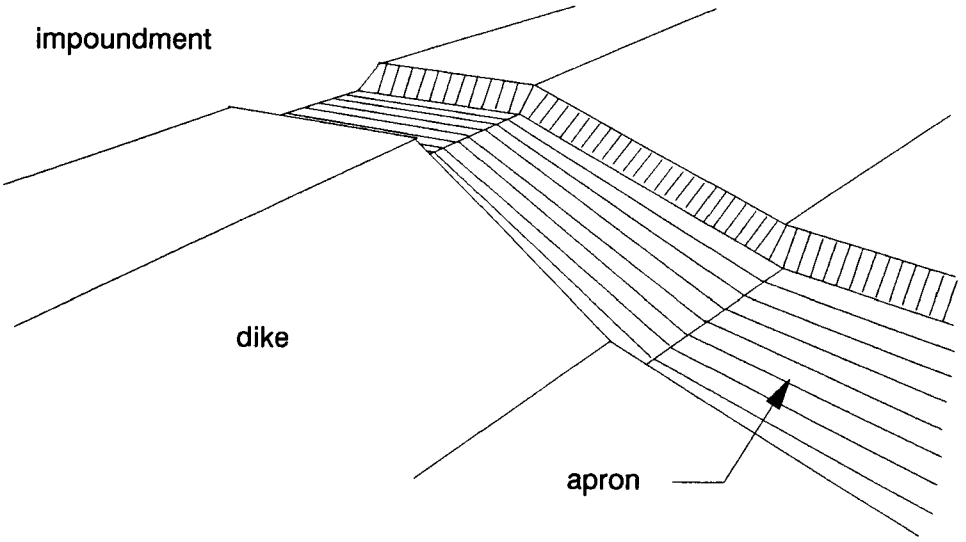

Figure 22. Dike spillway with protective toe apron.

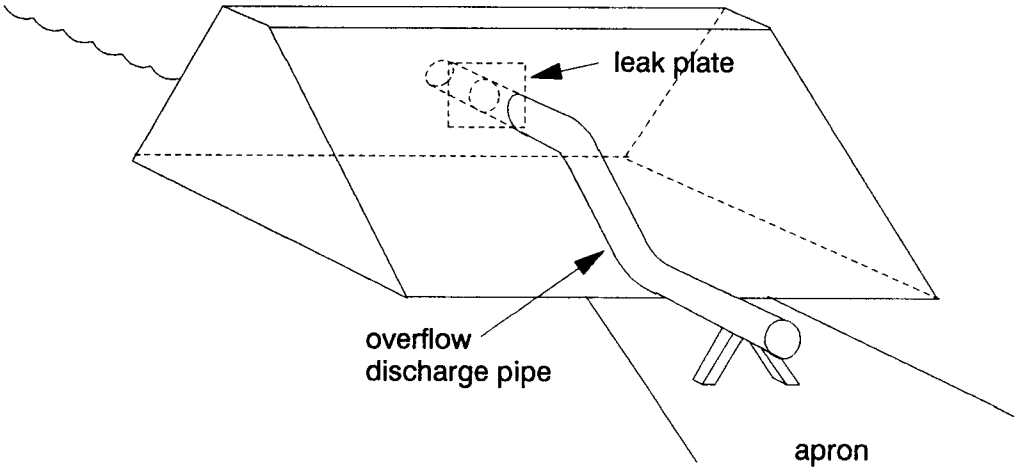

Figure 23. Impoundment overflow discharge pipe through dike.

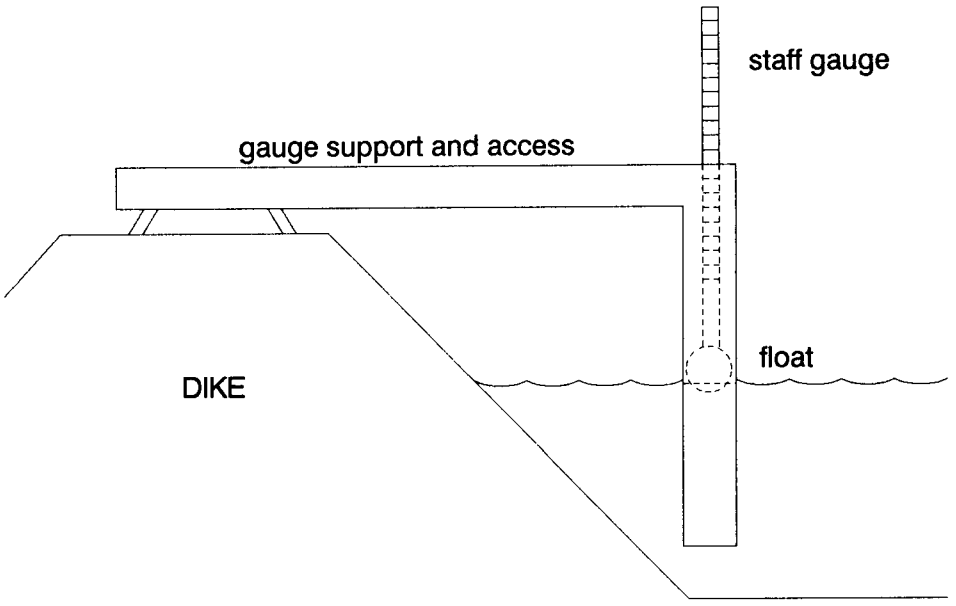

Figure 24. Example of liquid-level monitoring setup; manually-read staff gauge.

In an automated system, the attainment of a specified liquid level may trigger a device to stop input to the impoundment or to open a discharge line, or both. Another option is to trigger a warning signal indicating that some other action is needed. Other options, or combinations of options, may be activated with an automatic level-sensing system. Figure 25 is a sketch of a liquid-level recorder and alarm system.

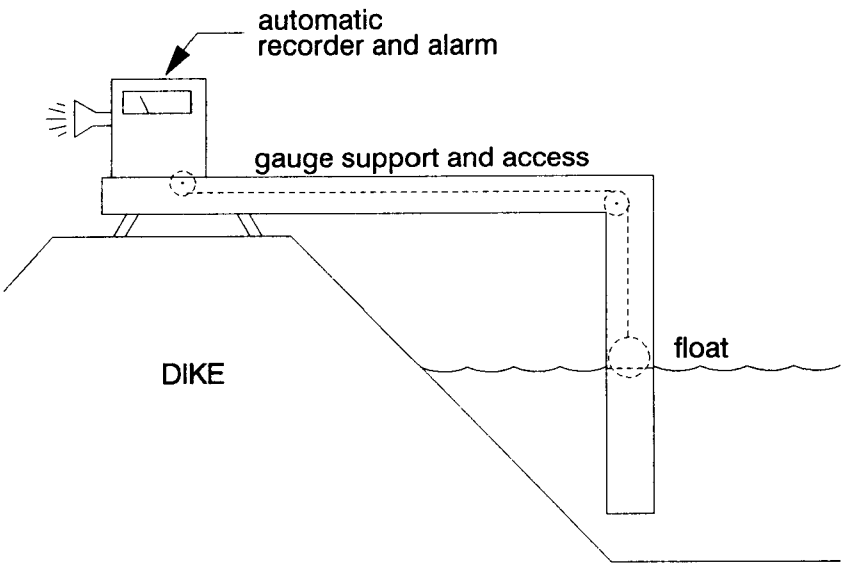

Figure 25. Example of liquid-level recording and alarm system.

The major components governing the flow into and out of a surface impoundment are the inflow and outflow structures. Normally, the inflow structure will be a pipe equipped with a flow valve. Typical outflow structures are pumps, weirs, spillways, and pipes.

The valves used at hazardous waste surface impoundment should be capable of being integrated into the level control system, and acting as a manual override for adjusting flow if the automated system fails. Valves used in hazardous waste service must be constructed of materials that are compatible with the hazardous liquids to which they are exposed. Considine (1974) provides a complete review of the types of valves available.

The selection of a specific pump type should be based on the characteristics of the liquid to be moved (e.g., corrosivity, ignitability, specific gravity, density, and total solids content). Aid in selecting a pump can be found in a reference by Karassik et al (1986).

A protective membrane or apron must be designed to prevent erosion at outfall and inflow structures where the discharge is onto a surface. The design of the protective apron will largely depend on the types of inflow and outflow structures, flow rates, and liner protection. The construction material for the apron is often concrete, but may be geomembrane, or, in some cases, velocity-impeding riprap placed over a geotextile.

When passive outfalls are used, the protective apron should extend from the outflow structure to some distance away from the toe of the dike slope (see Figures 22 and 23). If the outfall is designed for regular process use rather than for emergency overtopping prevention, apron design must prevent erosive flow and reduce terminal velocities. Common methods for reducing flow velocities and erosive flow employ baffled aprons (U.S. Bureau of Reclamation, 1974) and properly designed sloping aprons (Linsley and Franzini, 1979).

In many cases, pipes will be used for both inflow and outfall structures. When used for inflow, the primary concern is to prevent erosion in soil liners and tears in geomembranes caused by impinging liquid. Enlarging the outlet of the pipe to a size several times larger than the average diameter of the inflow pipe will act to dissipate energy, reducing the potential for causing liner failure (Kays, 1977). The outlet may be extended out to the deeper part of the impoundment and located near the liquid surface so that the energy is dissipated into the liquid. If a pipe is used as an impoundment outfall structure, the preferred design is to place the pipe so that the outlet is at or near the same elevation as grade, and extends beyond the outside toe of the berm (see Figure 23).

3.4 SECONDARY CONTAINMENT

Secondary containment structures are not specifically required under current RCRA regulations. However, they can prevent widespread damage if the impoundment should be breached, particularly if the impoundment has been constructed entirely above grade.

Secondary containment structures usually consist of low dikes with a much larger plan area than the primary containment dikes (see Figure 26). The secondary containment structure should be able to withstand a sudden surge of released liquid and should retain the released waste for a period sufficient to allow detection and recovery of the material. Engineering considerations (e.g., soil stability) used in the design, construction, and operation of the primary surface impoundment dike are applicable to secondary containment structures. Hydrologic considerations also should be included in the secondary containment design.

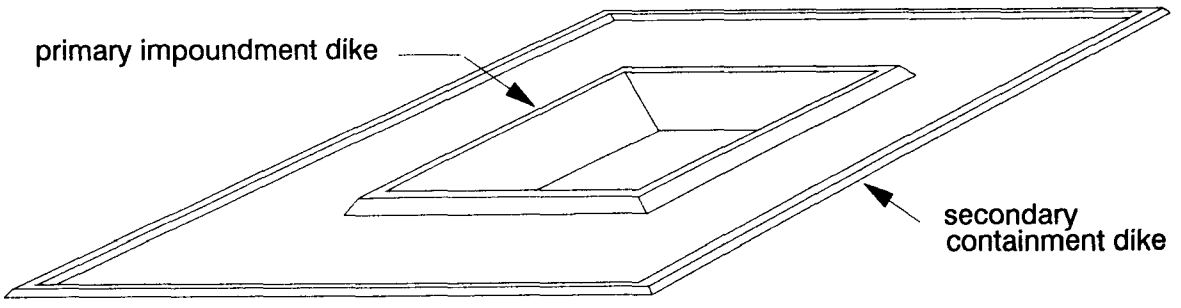

Figure 26. Primary and secondary containment dike layout.

3.5 LEAK DETECTION SYSTEMS

"Leak detection system" is a term applied to a monitoring device or technique which monitors the integrity of an impoundment liner in a non-destructive manner. In a sense, the conventional leak collection system serves that purpose. It can detect the presence of liquid in the leak collection system and thus the occurrence of a leak in the primary liner. If a leak collection system is installed beneath the secondary liner, it could serve the same purpose for the secondary liner. However, detection does not occur in either case until the liquid reaches the sump. Nor can the leak location be pinpointed.

A leak detection system, as the term is used here, should be capable of detecting liquid moving through the liners essentially as soon as a hole appears. In addition, it is desirable that it have the capability of locating very small leaks to within an area of less than 1 ft^2 (0.09 m^2) (USEPA, 1984b).

Leak detection techniques employ either sensors (1) located within the potentially leak-affected zone or (2) remotely located outside the impoundment area. These are referred to as in-situ and remote systems, respectively. An in-situ system is arrayed at the time of construction, while a remote system may be installed at an existing site. Remote sensors may be located at the surface or in a borehole at some distance from the leak. The output of either a remote or in-situ system would be recorded at some convenient surface site. In situ instrumentation can be continuously monitored throughout the active life of the impoundment and during the post-closure period. Remote systems are ordinarily activated periodically during routine monitoring or when liner failure is suspected.

Leak detection techniques that may be adaptable to the surface impoundment situation include (1) electrical resistivity, (2) electromagnetic techniques, (3) acoustic emissions, and (4) seismic methods. Of these techniques, electrical resistivity appears to show the most promise with respect to performance and reliability (USEPA, 1984h).

A leak detection system may be arrayed to detect leakage into the leak collection system and the leak location in the primary liner (Figure 27). This is usually a system that is operated intermittently, because it uses a transducer floating across the impoundment surface. A system may be designed to detect leakage into the leak collection system, but without the capability of locating the leak (Figure 28). One may also be arrayed to detect leakage through the geomembrane component of the secondary liner, or through the entire composite liner into the vadose zone (Figure 29). All of these systems are based on electrical resistivity.

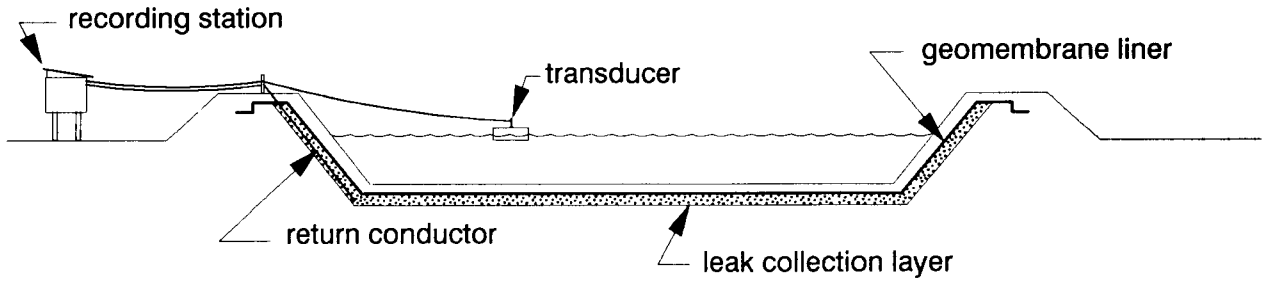

Figure 27. System to detect and locate leaks in top (primary) geomembrane liner.

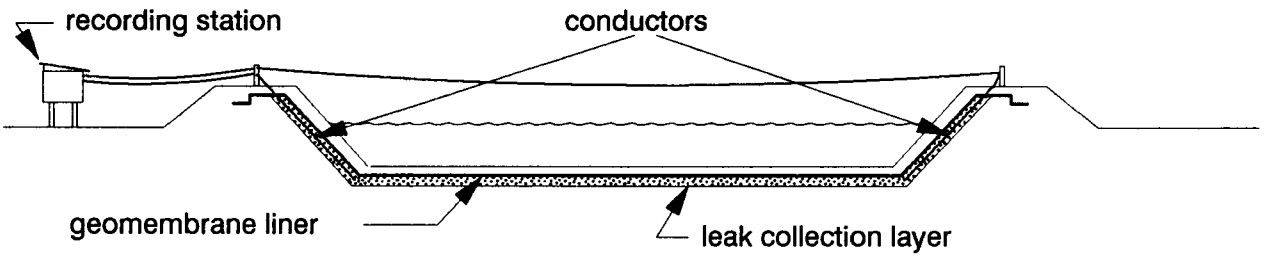

Figure 28. System to detect leakage through top (primary) geomembrane liner.

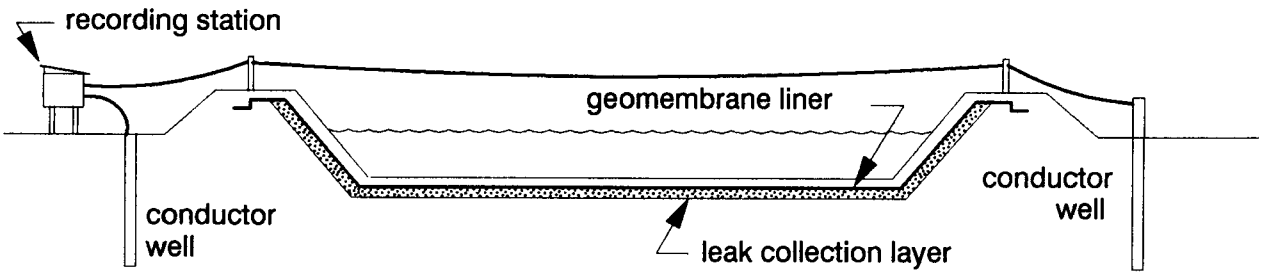

Figure 29. System to detect leakage into vadose zone.

Lysimeters (soil-pore liquid samplers) have been used successfully to monitor leachates migrating through the unsaturated zone at land treatment facilities and other disposal sites (USEPA, 1988b). Lysimeters have also been placed below liners at surface impoundments to collect samples of leaking waste liquid (Figure 30). The advantage of placing lysimeters in the unsaturated zone beneath a liner system is that liquid samples can be collected and analyzed for the presence of hazardous constituents, their rate of degradation, and decomposition by-products (USEPA, 1988b). Unfortunately, lysimeters cannot be used to determine the rate or absolute amount of leachate moving through the soil.

Using a liquid mass balance to identify leaks in some situations may be a reasonable backup method for detecting surface impoundment leaks (USEPA, 1984b). It is not proposed as a primary leak detection method. The liquid mass balance process for leak detection requires long-term measurements of waste input and environmental parameters. Leaks will not be detected in a period of days, weeks, or possibly even months, unless the leak is fairly large.

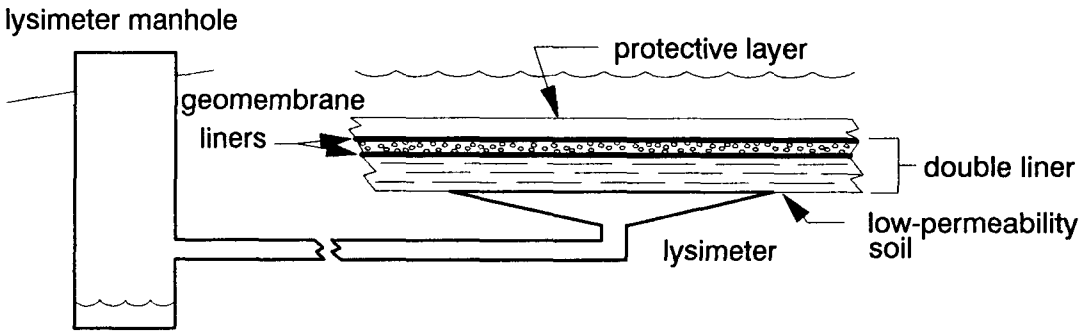

Figure 30. Lysimeter for leak detection beneath bottom liner.

The liquid mass balance method is suited for covered surface impoundments with known or controllable input and output parameters. In open systems, where the parameters cannot be controlled, it is considerably more difficult. Nearly all surface impoundments are open systems where evaporation, precipitation, wind speed, and temperature have not been recorded or have been measured only at low levels of accuracy.

Perhaps the largest source of error in the liquid mass balance is the evaporation estimate. Due to the many uncertainties in applying the mass balance to an open impoundment and the potentially large errors in the parameters, the mass balance should not be considered as a primary leak detection method for open impoundments (USEPA,1984b).

3.6 SURFACE WATER MANAGEMENT

Diversion structures (berms and ditches) intercept and redirect flow of surface water away from a surface impoundment (Figure 31). Surface impoundments, unless they are intended to collect runoff, need to be hydrologically isolated from the surrounding terrain to function properly. Diversion structures must be designed to prevent flow into the impoundment from at least the runoff from a 25-year storm (USEPA, 1982a).

Rather than moving water away from an impoundment, diversion structures can also be used to divert runoff, where contaminated, <u>into</u> a holding pond or surface impoundment.

Runoff diversion is accomplished by constructing a berm of moderately compacted soil or by excavating ditches to divert water around the impoundment. Excess material from constructing the surface impoundment or from ditch excavation is often suitable for constructing diversion berms. Figure 32 shows three different ditch and berm cross sections.

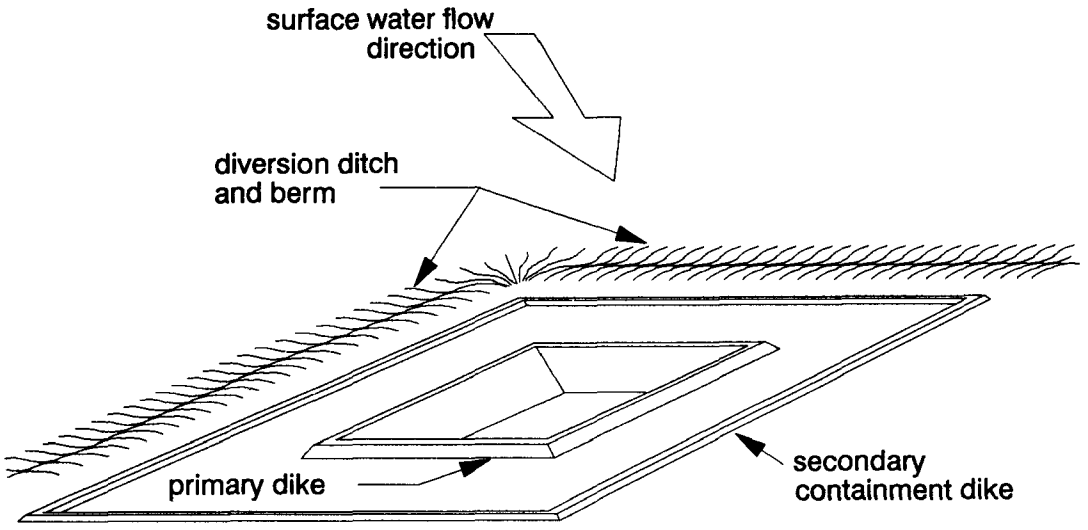

Figure 31. Runoff diversion past surface impoundment.

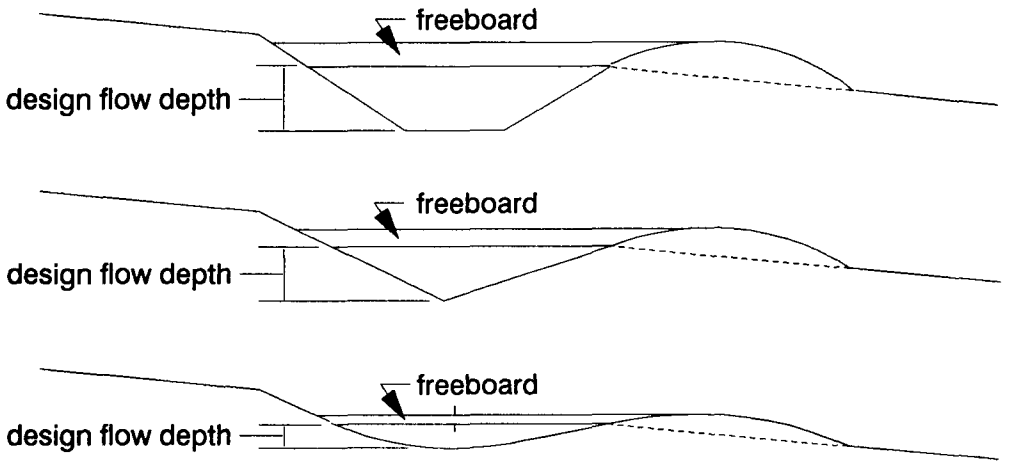

Figure 32. Typical diversion ditch and berm cross sections.

Berms are embankments of earth or other suitable materials constructed to protect a surface impoundment from spreading surface waters. They are designed to provide short-term protection by intercepting storm runoff and diverting the flow to natural or manmade drainageways. Sufficient freeboard should be provided to prevent overtopping of the berm by the design flood. Berm sloughing can be reduced by using proper side slopes and construction methods. A berm should have a minimum top width of 4 feet (120 cm) and a freeboard of 3.5 to 12 inches (9 to 30 cm) (USEPA,1982a).

Berms should be placed across the slope at an angle to the horizontal so that water moving downslope is intercepted and moved laterally around the impoundment at a low velocity to minimize erosion. Longer slopes may need more than one berm.

A diversion ditch should be designed to accommodate flows from a 25-year frequency storm (USEPA, 1982a), and must intercept and convey the flows at non-erosive velocities. Diversion ditches are sized based on the Mannings Formula (USEPA, 1982h):

$$Q = \frac{1.49}{n} AR^{2/3}S^{1/2}$$

where:

Q = discharge in cfs (m^3/sec)
n = coefficient of roughness
A = cross-sectional area of channel in ft^2 (m^2)
R = hydraulic radius of the channel in ft (m)
S = longitudinal slope of the channel in ft/ft (m/m)

Design and construction criteria to use in diversion ditch design follow:

- Location should be based on outlet conditions, topography, soil type, slope length, and grade.
- Capacity should be sufficient to carry the peak discharge from a 25-year design storm using an assumed Mannings' coefficient (n).
- Channel should be trapezoidal, V-shaped, or parabolic, with side slopes no greater than 3H:1V.
- Flow velocity must not exceed the flow for the assumed Mannings coefficient (n) during the storm period.

The USDA (1979) provides information on maximum allowable velocities for an unlined drainage ditch excavated in various soils. However, channels must be grass-lined or riprapped over a geotextile to minimize erosion. Riprapped channels are appropriate for sites with heavy runoff volumes. The maximum allowable velocity for a grass-lined channel can also be found in the SCS manual (USDA, 1979). Channel shape may be based on construction and maintenance equipment available (e.g., graders are suitable for V-shaped channels).

Erosion is a function of velocity, depth, and time. The runoff peaks for the site must be determined to find which of these are key design parameters. Manuals (e.g., Urban Drainage and Flood Control District, 1979) can be used to find the design flow depth of channels.

3.7 CONTROLS FOR VOLATILE ORGANIC COMPOUND (VOC) EMISSIONS

The loss of VOCs from hazardous waste surface impoundments has been the focus of recent research. Investigated methods for reducing VOC emissions include complete enclosure, surface barriers, wind diversion fences, and adsorbents (EPA, 1985e).

Complete enclosure of the impoundment involves the use of an air-supported structure, or an inflated membrane, covering the entire impoundment (USEPA, 1985e). The membrane would be sealed around the edges, and the vapors would be bled off for treatment or incineration. This method could be expected to be nearly 100% effective in preventing the escape of VOCs. Compatibility of the vapors with the synthetic cover material must be considered.

Isolating volatile liquids from the air using a surface barrier involves floating a cover of foam-like material, oil, geomembrane, or other material, on the liquid surface. The objective is to eliminate, or at least reduce, the exposed liquid surface area, thereby reducing VOC emissions. Among the many potential problems associated with this method are dislocation of the surface barrier by wind and wave action, thereby uncovering the waste. In the case of an oil barrier, VOC emission from the oil itself may occur. Valsaraj et al (1985), in laboratory simulations, examined the ability of a mineral oil layer in controlling emissions of acetone, n-propanol, ether, and benzene. It was much more effective in controlling the first two.

If a floating geomembrane is to be used, its compatibility with the waste liquid and vapors must first be considered.

Wind diversion fences have been researched in laboratory simulations by Thibodeaux et al (1985). Study results indicate that various arrangements of perimeter and network grid fences can reduce VOC emissions up to 80 percent (Figure 33). The research is based on the premise that reducing the flow of air across a surface impoundment will cause a subsequent reduction in VOC emissions. This is because the volatilization process which increase with wind speed. (Wind fences are ineffective at zero wind speed.) Because the resistance on the liquid side of the interface is typically much greater than the resistance of the gas side, the liquid controls the volatilization process.

Adsorbents (e.g., activated carbon) appear to be the least attractive of the methods. They are expensive and must be replaced or regenerated. The use of adsorbents is based on the adsorbent "trapping" a VOC, which is then no longer available to volatilize. Increasing the amount of adsorbents in the impoundment reduces the effective concentration of VOCs in the depends on chemical gradients across the liquid/air interface,

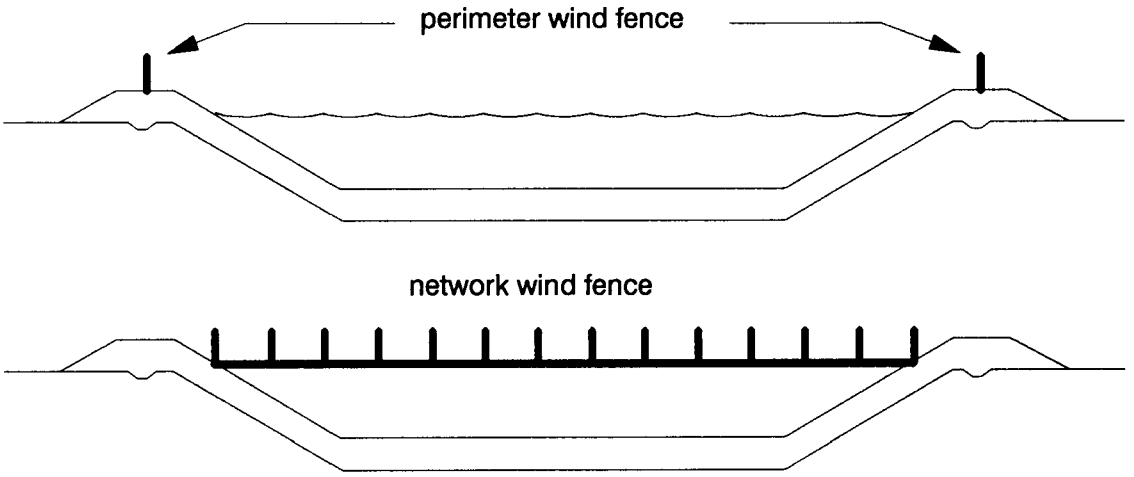

Figure 33. Wind diversion fences for VOC control. (from Thibodeaux et al, 1985)

liquid phase, thereby decreasing the emission rate. Further information on this technique is available in Cudahy and Sandifer (1980).

It is unlikely that these methods will be perfected to a point that they can reduce VOC emissions from surface impoundments by 100%. Therefore, an alternate procedure to reduce the VOCs reaching the impoundment (e.g., by pretreating the waste stream) may become important if regulatory guidelines are adopted that impose stringent VOC emission standards. At the least, VOC monitoring is likely to become a requirement for surface impoundments handling hazardous wastes. Waste-stream pretreatment is a design alternative which should be considered.

Waste pretreatment methods to control VOC emissions may include stripping the waste stream with air or steam, using adsorbents (i.e., activated carbon) or chemical oxidation. Each system has its advantages and disadvantages, and none is best suited for use in all situations. Information on stripping methods, adsorption technology, and chemical oxidation is available in the literature (USEPA, 1984c and 1984d).

Much of the research into methods to reduce VOC emissions has resulted in models that attempt to estimate VOC losses. Unfortunately, these models involve complex mathematical equations and are not easily adapted for practical use. One exception is a procedure suggested by Shen (1982), which provides practical engineering solutions and offers a simple technique for estimating the volatilization rate of VOCs from waste lagoons. Shen emphasizes that this is an estimate and should only be used to evaluate the potential for VOC emissions.

Other methods and related information available for estimating VOC emissions include the following: USEPA (1985c and 1985f), Mackay and Yeun (1983), and Thibodeaux et al. (1982).

3.8 CONSTRUCTION QUALITY ASSURANCE (CQA) PLAN

A Construction Quality Assurance Plan should be developed as part of the surface impoundment design process. The plan describes the programs and principles employed to control quality of construction. Quality Assurance (QA) principles include the following:

- sufficient autonomy and authority for the designated QA personnel or QA/Quality Control (QC) organization;
- establishing procedures to control activities affecting construction quality;
- documenting evidence that these activities are performed satisfactorily; and
- systems to identify, correct, and report nonconforming items.

USEPA (1986a) has provided guidance for preparing a CQA plan to ensure, with a reasonable degree of certainty, that completed disposal facilities meet or exceed design criteria, plans, and specifications. The guidance covers CQA for the following structural components of surface impoundments:

- foundations
- dikes
- low-permeability soil liners
- geomembranes
- geotextiles
- leak collection systems
- final cover systems

CQA activities must be coordinated with construction activities to ensure that specifications and performance standards are achieved. This coordination requires that the contractors establish and modify on a routine basis a schedule of construction activities. An accurate schedule is essential if CQA goals are to be achieved.

CHAPTER 4

CONSTRUCTION

The surface impoundment construction phase includes the following tasks: site preparation; excavating and preparing foundations and cut-slopes; constructing dikes, soil liners, and secondary containment structures; installing geomembrane liners; constructing leak collection systems; placing protective coverings over dikes and liners; and installing liquid level control systems. This section discusses each of these tasks.

4.1 SITE PREPARATION

The surface impoundment site is prepared for construction by clearing trees, vegetation, topsoil, stones, and unwanted structures. Support facilities for work crews and equipment are then installed. They include a management office, field laboratory, and equipment storage and maintenance areas. Safety and spill containment devices are installed. Finally, borrow areas are cleared and established as sources of material for constructing dikes, liners, and other earthen structures.

Surface drainage at the site should be diverted or otherwise controlled to prevent runon to the borrow and construction areas. Runon can adversely impact the workability of clay soils and the time required to complete construction.

Attention to site security is generally required to prevent theft, vandalism, or unauthorized entry. The degree of security depends on the type and amount of equipment and materials stored, the amount of time personnel are off-site, the remoteness of the site, and other site-specific factors. Measures that may be taken include the installation of fencing and locked storage facilities, and providing security personnel.

4.2 CUT-SLOPE AND DIKE FOUNDATION CONSTRUCTION

Dikes and cut-slopes are constructed so that they form the continuous interior slopes of a surface impoundment (Figure 34). Dikes are situated above grade and are constructed of compacted fill material. Cut-slopes are excavation side slopes cut into the native soil. The final interior surface of dikes and cut-slopes, along with the excavated bottom surface, will act as a

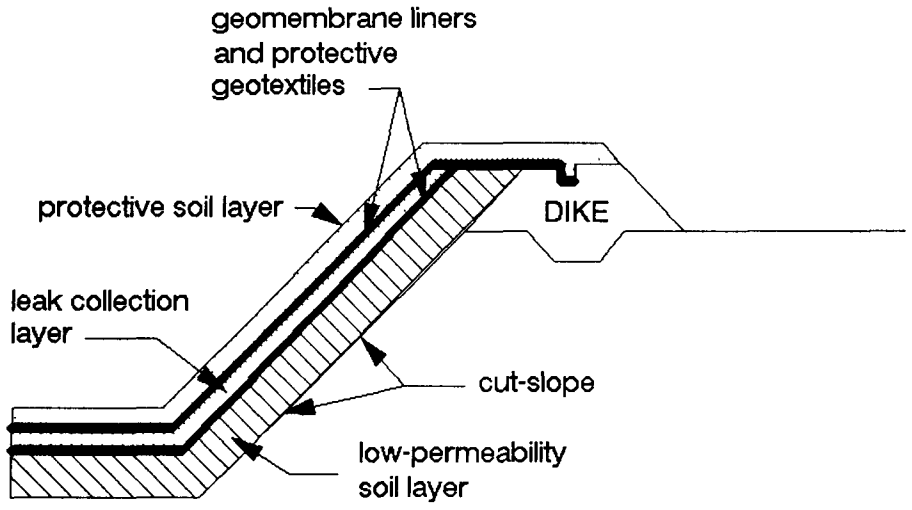

Figure 34. Cut-slope, dike, and side-wall cross section.

uniform foundation for the impoundment liner, and, therefore, must have constructed strength and compressive properties compatible with foundation support requirements.

4.2.1 Cut-slopes

Cut-slopes are required where all or part of the impoundment is to be below grade. They are constructed by removing the soil with standard earth-moving equipment. After the cut forming the sidewall is completed, the cut-slope may require moisture content adjustment and/or compaction to bring the soil to desired specifications. If the moisture content is too high, simply allowing the slope to dry may be adequate. The cut-slope should not be exposed to rain unless runoff will not adversely affect the foundation characteristics of the slope soil.

Some sensitive soils can actually lose strength as a result of attempted compaction. If the design engineer considers compaction appropriate, it can be performed using the same equipment and procedures used to compact dikes and soil liners. Most equipment can adequately compact side-wall slopes up to 3H:1V. Steeper slopes or wet conditions may require that towed compactors be used, or even that towing assistance be provided for self-propelled equipment. Towing may require another piece of heavy equipment or a winch positioned at the top of the slope.

The steepness of the side slope also affects the soil compactive effort. As the slope increases, the effect of the compacting weight applied to the soil decreases due to the increasing force vector directed down the slope (see Figure 35).

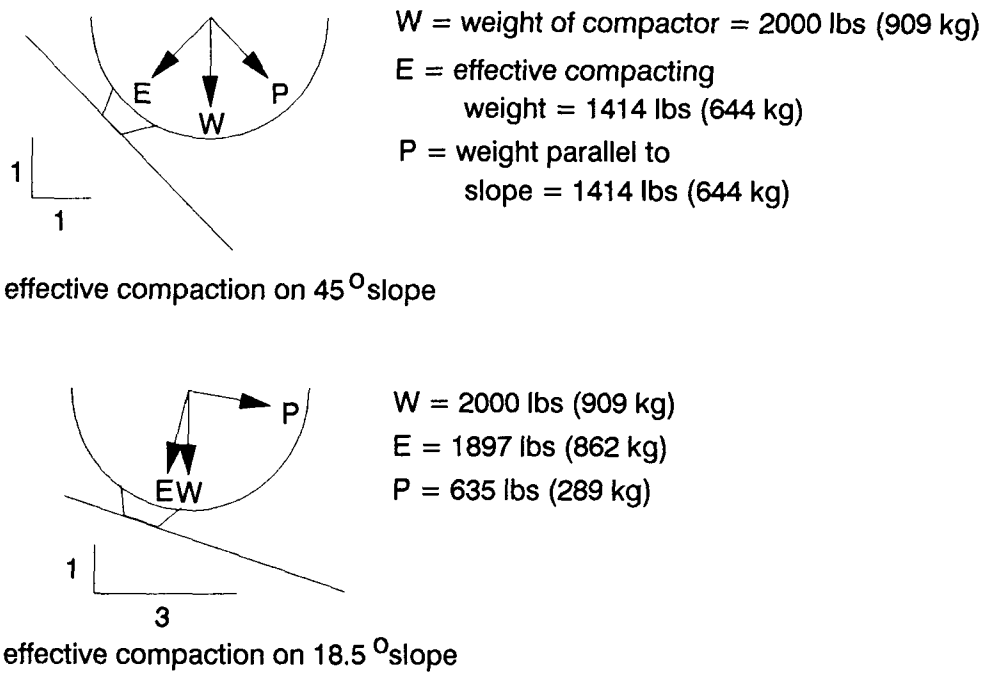

Figure 35. Idealized schematic showing effects of slope on compactive effort.

This effect is overcome by increasing the number of equipment passes required to reach the specified soil density.

The impoundment bottom is also a cut surface that should possess the same characteristics as the side slopes when completed. Most of the same considerations apply.

4.2.2 Dike Foundation

The dike foundation is the base upon which the dike is constructed. The condition of this foundation is as important to dike stability as the strength of the dike material itself. As impoundment construction begins, the foundation area is cleared and the topsoil is removed.

If the foundation soil consists of soft or sensitive fine-grained soil, final excavation to subgrade elevation should be done using a straight-edged excavator bucket (no teeth) to avoid remolding of the subgrade soils and the resulting strength loss. If zones of weak or undesirable soil are suspected, proof-rolling may verify their existence. Proof-rolling consists of passing a piece of heavy compaction equipment, such as a pneumatic roller,

over the soil. Poor or weak areas will be revealed by the development of rutting or ground heaving. If weak areas are exposed, poor soils should be removed and the area filled and recompacted with acceptable material.

Scarification of the foundation soil may be required to provide the soil with an adequate bonding surface for placing the initial soil lift during dike construction (Creager et al, 1945; Hammer and Blackburn, 1977). Scarification is accomplished using a ripper attachment on a bulldozer, disc harrow, or similar implement. Foundations composed of firm soil should be easily scarified, while scarifying soft soils may be less successful. The correct combination of moisture content, density, and scarification should promote bonding between the foundation soil and the initial lift of dike soil by facilitating intermixing of the two materials during compaction. This action will minimize horizontal permeability at the foundation-dike interface.

4.3 DIKE AND SOIL LINER CONSTRUCTION

The construction of dikes and the construction of soil liners have many similarities. The following discussion addresses them together where appropriate.

4.3.1 General Construction Process

Dikes and low-permeability soil liners are constructed of soil which is placed in lifts and compacted at a specified moisture content to a specified density. Successive lifts are placed and compacted until the design height or total thickness is achieved. Standard recommended lift thicknesses are 9 inches (23 cm) for loose lifts; and 6 inches (15 cm) for compacted lifts, when compacting with penetrating-foot rollers on cohesive soils (Church, 1981; Creager et al., 1945; Hammer and Blackburn; 1977). The general sequence for dike construction is as follows:

(1) Scarify and adjust moisture content (if required) of the surface on which the lift is to be compacted; first lift placed on foundation soil.

(2) Place the loose soil over the surface and level to the appropriate thickness.

(3) If the soil has not been processed in the borrow area or if further processing is required, process before compaction.

(4) Compact the soil to the specified density using an appropriate number of passes with the compaction equipment.

(5) Repeat the above steps until a sufficient number of lifts has been placed.

A crest should be maintained along the dike centerline to promote surface drainage (Figure 36).

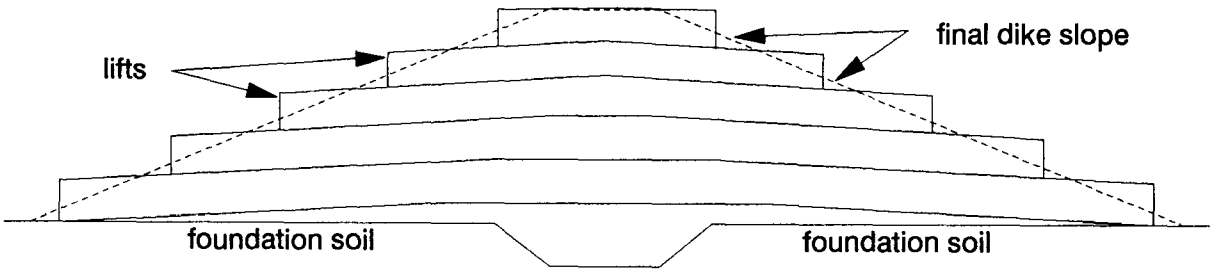

Figure 36. Dike cross section showing lifts and final slope cuts.

Proper soil compaction should provide the dike with sufficient strength and sufficiently low permeability to perform satisfactorily. Further information on soil compaction is given in Section 4.3.2.1.3, as compaction procedures for soil liners and dikes are essentially identical. CQA is critical to properly constructing the dike and other surface impoundment components. CQA monitors the construction process and ensures that design specifications are achieved. The elements of the CQA Plan are discussed in Section 3.11.

Constructing a low-permeability soil liner involves many of the same procedures as dike construction: preparing the soil for compaction, placing the material in loose lifts, compacting the soil to the required density and thickness, and testing to ensure that specifications are met. The soil-liner construction process has been described by USEPA (1986b) in its Technical Resource Document addressing clay liners.

Technical guidance provided by USEPA (1986a) on construction quality assurance recommends constructing a representative test fill before constructing the full-scale soil liner to verify that performance standards can be consistently achieved using specified materials and equipment. A test fill is also recommended as a prerequisite to dike construction. Potential scheduling delays during dike and liner construction due to compaction or material problems can be avoided if a test fill is constructed and problems corrected during the surface impoundment design phase. The test fill should be constructed using the same soil, equipment, procedures, and specifications to be used in constructing the full-scale facility.

Strict control of the test fill construction process and documentation of the test fill data are required for useful results. The test fill data can be compared with data obtained during impoundment construction to indicate acceptable criteria. USEPA (1986a) provides guidance on constructing and utilizing test fills.

4.3.2 Pre-placement Soil Preparation

Preparing or processing soil materials prior to soil liner or dike construction improves compaction efficiency. Processing activities include reducing clod size, removing unwanted material, and adjusting moisture content. Removing unwanted material and adjusting moisture content are often performed in the borrow areas, while clod size reduction may be performed in the construction area. Homogenization thoroughly mixes the soil to dilute small quantities of undesirable materials (e.g., sand and gravel) which tend to increase the hydraulic conductivity of soil liners. Clod-size reduction is best accomplished at water contents at or near the plastic limit. At low water contents, the clod strength is often high; at high water contents, the soil may become sticky and have reduced workability.

Mechanical equipment, (e.g., rototillers, pugmills, and pulverizers) may be used to reduce clod size, homogenize the soil, and mix amendments or moisture prior to soil placement and compaction. These processes may also be accomplished using a disc, blade, or other implement towed by a tractor or dozer. Proper soil processing enhances compaction and uniformity of desired liner or dike properties.

Moisture-content adjustments are often required prior to soil compaction. The moisture content is usually specified with respect to optimum, as determined from standard Proctor (ASTM D 698-78) or modified Proctor (ASTM D 1557-78) compaction tests (ASTM, 1986c). A specific acceptable moisture content range (e.g., 1% less to 3% greater than optimum for liner construction; drier, perhaps up to 2% less than optimum, for dike construction) is generally stated in the design specifications. Moisture is either added or removed to maintain the recommended moisture content. Moisture reduction is normally performed by air-drying the soil or by adding and mixing drier soil. Moisture addition is usually performed using water trucks or sprinklers to add water to the soil. Dozers, disk harrows, or rototillers are then used to mix and incorporate the water into the soil. The preferred procedure suggests that water content be adjusted in the storage or borrow area before the soil is placed for compaction.

Moisture may also be added or removed during construction, or between specific activities, as required. For example, slight

desiccation of the surface of a compacted soil lift may occur due to delays, and CQA may require that moisture be added before continuing construction. Moisture is added or removed in the same or similar manner as in the borrow area before placement for compaction. The moisture content of the soil during and after compaction is monitored according to CQA procedures using equipment such as a neutron moisture-density probe. Actions should be taken to prevent or minimize moisture changes due to construction delays or other factors. For example, a temporary protective cover of soil may be applied to reduce evaporation, or the surface may be sealed (rolled smooth) to hasten runoff and lessen the potential for moisture addition from rainfall.

4.3.3 Soil Material Placement

A survey of liner construction sites and personnel by Elsbury et al (1985) indicates that soils are generally placed in parallel strips over the liner area using earth movers or trucks, and then leveled with bladed equipment to the desired loose lift thickness. Strips may be stepped up the side slopes in liner construction in order to maintain a horizontal working surface and facilitate compaction.

Control of lift thickness is important because it influences compaction effectiveness and the resulting hydraulic conductivity of the compacted soil liner. Horizontal and vertical survey control points should be established to inspect the areal extent and thickness of liner lifts throughout construction. Loose lift thickness is commonly specified at 9 inches (23 cm), which results in a compacted lift of approximately 6 inches (15 cm), whether a dike or a liner is being constructed. However, compacted lift thickness depends on soil, equipment, and operating characteristics (Church, 1981; Creager et al, 1945; Elsbury et al, 1985; Hammer and Blackburn, 1977).

4.3.4 Soil Compaction

Effective compaction imparts strength to dikes, foundations, and other earth structures, and reduces the permeability of the low-permeability soil component of the liner. A proper compaction procedure densifies the loose lifts and bonds the upper lift to the underlying lift. Bonding of layers is essential for eliminating zones of higher horizontal hydraulic conductivities at the lift interfaces. Bonding is achieved by scarifying (roughening) the upper surface of a compacted lift before placing and compacting the next lift, and by compaction equipment that will penetrate through the loose lift into the compacted lift and a zone of intermixed material between the two.

The critical performance standard for surface impoundment soil liner components is low hydraulic conductivity. This characteristic is obtained by efficient compaction at specified water contents, which are generally wetter than optimum (e.g., 1 to 3 percent, dependent on soil type and compactive effort). Preferred compaction induces a homogeneous dispersed or unoriented structure within the soil material which, in turn, provides a lower hydraulic conductivity.

Stability, rather than permeability, is the prime concern for surface impoundment dikes. Thus, dike construction strives for soil strength, which is accomplished by compacting dry of optimum to maximum density.

After a number of passes are completed, in-situ moisture and density measurements should be made with a moisture-density probe or similar equipment, according to CQA requirements. Compaction should continue if measurements show that density specifications have not been achieved. In-place compaction density is normally required to be in the range of 90 to 95 percent of standard Proctor maximum density obtained in laboratory testing.

Soil compaction must be accomplished with equipment that is best suited for the particular soil type and situation. Several equipment types are available, including the following:

(1) Penetrating-foot rollers:
- sheepsfoot
- pad foot
- tamping foot

(2) Pneumatic or rubber-tired rollers
(3) smooth wheel or steel drum rollers
(4) grid rollers

Compaction equipment is manufactured in both towed and self-propelled models. The better-suited model will be based on soil, site, and design characteristics, and equipment model availability. Compactor choice depends on site-specific compaction needs and on soil grain sizes. Dikes and liners are most often compacted with penetrating-foot rollers (Figure 37). Recommendations are provided by Holtz and Kovacs (1981). Equipment can often compact satisfactorily outside the range of prescribed use. Additional information on applicability of compaction equipment is given by USEPA (1988b and 1989b). (1975).

Several older but still useful references discuss compaction with penetrating-foot or kneading compactive force (Hilf, 1975; Johnson and Sallberg, 1960; Lambe, 1958; Mitchell et al, 1965; and Sowers and Gulliver, 1955). The theory of compaction of cohesive soils was developed by R. R. Proctor and presented in a series of articles published in 1933 (Proctor, 1933a;b;c; and d).

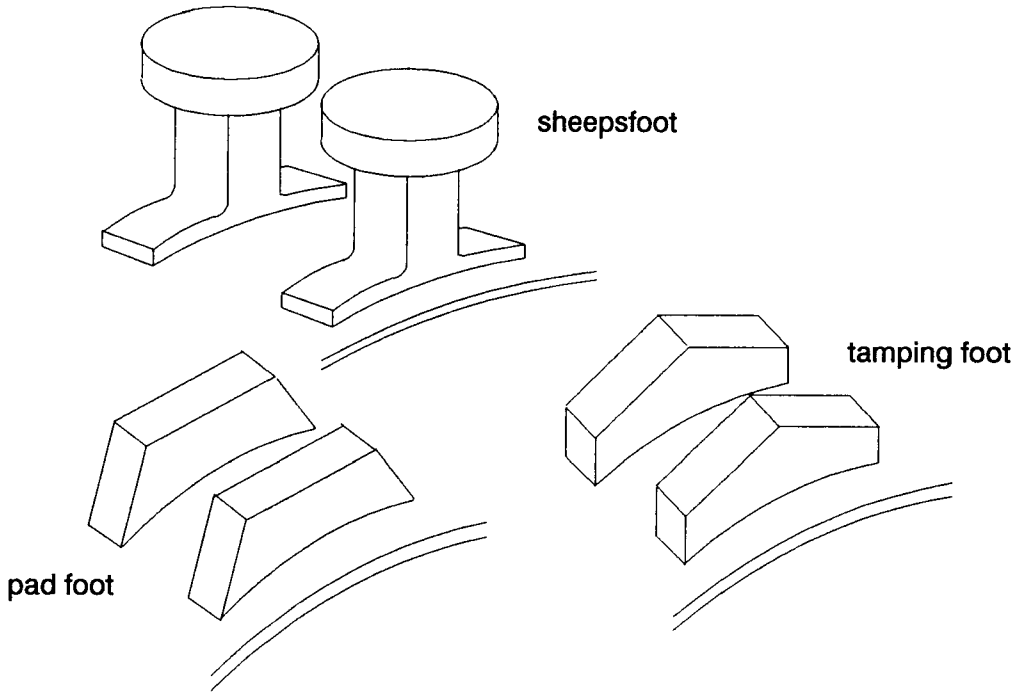

Figure 37. Compactor foot designs.

Steel-wheel (also known as steel drum) rollers are effective in final preparation of the low-permeability soil surface for installing the geomembrane liner. The equipment provides the soil with a smooth, even surface, free of clods that can damage the geomembrane. The smoothest possible surface is required for installation of the overlying geomembrane in a composite liner (Giroud and Bonaparte, 1989).

4.4 GEOMEMBRANE LINER INSTALLATION

Geomembrane liner installation involves placing and seaming panels of the synthetic material over a prepared subgrade to form a barrier against liquid migration. The geomembrane must be inspected and tested throughout installation to ensure that the seams and panels are free of wrinkles, blemishes, holes, inadequate seams or other defects which may allow the escape of liquid. Workmanship, experience of installers, unstinting care in installation, and a commitment to quality control are all critical to a successful, leakproof installation. Giroud (1985) and USEPA (1989b) present information on constructing liners with geomembranes. All facets of geomembrane selection, testing, and installation have been comprehensively addressed by USEPA (1988a). More specific information is being prepared by USEPA on the important topic of geomembrane seaming; the first of these addresses the seaming of polyethylene geomembrane (USEPA, 1989c).

4.4.1 Storage of Materials and Equipment

Geomembrane materials and installation equipment delivered to the site should be stored in a secure location to protect them from vandalism and theft. An existing secured area or a temporary storage area can be used to provide this protection. The impoundment area should also be protected from intrusion and tampering that could damage the geomembrane during construction.

Provisions should be made for appropriate equipment to unload and transfer the membrane rolls or panels. The rolls are heavy and may require special or modified equipment to move them without damaging the material.

Unless the geomembrane is applicable for exposed service, it should be stored out of the sunlight to prevent ultraviolet degradation and to minimize blocking. Blocking occurs when liner materials are heated, causing them to stick together. The material may then tear when unrolled on the subgrade.

4.4.2 Construction Quality Assurance/Inspection

CQA inspection during installation is essential if the geomembrane is to be an effective barrier against waste migration to the underlying soils. CQA assures planned review and tracking of construction activities.

The subgrade condition, geomembrane placement and seaming, and sealing of penetrations through the liner require considerable CQA. A CQA Officer representing the surface impoundment owner/operator is required to assure that installation specifications and the contractual obligations of the installing contractor are met.

An adequate CQA program results in surface impoundments being built as designed. Guidance for preparing CQA programs is given by USEPA (1986a). More information on CQA plan preparation is provided in Section 3.11 of this document.

4.4.3 Subgrade Preparation

Subgrade preparation provides a firm base for the geomembrane liner. In the USEPA-recommended double-liner design, the drain or leak collection layer is the subgrade for the primary or top geomembrane, while the low-permeability soil component is the subgrade for the geomembrane component of the composite secondary liner. Rocks, clods, or irregularities with sharp edges should be eliminated from the finished subgrade by fine-finishing (rolling smooth) the surface before installing the

geomembrane. Fine-finishing of sand layers is accomplished using vibratory rollers and drags on a slightly wet surface. Smooth-wheel rollers may be required to finish the surface in both the low-permeability-soil and sand subgrades. During the fine-finishing stage, grasses and other vegetation must be removed from the subgrade layer, or vegetation killer applied, to prevent their penetrating the geomembrane. Care must be taken to attain a smooth and flawless surface on the low-permeability soil layer of the composite liner to facilitate continuous contact with the geomembrane installed directly on it.

Proper timing of construction activities is essential to maintaining proper moisture content of the subgrade. The geomembrane should be placed on the finished subgrade soon after the finishing process is completed. Uncovered, fine-finished subgrades can be easily disturbed by rain or wind. If rainfall occurs during or after fine-finishing work on a slope, rills, ruts, and ravines may be eroded into the surface. Sealing or covering the fine-finished subgrade with a protective layer will prevent soil erosion by surface runoff. A protective covering is also required to prevent moisture loss and desiccation of the soil layer during extended dry periods. The protective covering, if on the low-permeability soil layer, must be removed before applying the geomembrane.

4.4.4 Geomembrane Liner Placement

The geomembrane liner is secured at the top of the impoundment dike, usually in an anchor trench, extending around the impoundment perimeter. The trench should be excavated and ready to receive the geomembrane before the panels are brought to the installation location. More information on geomembrane anchoring is given in Section 4.4.5.

The geomembrane panels will be placed in a pre-determined pattern, an example of which is shown in Figure 38. Placement begins by arranging (or spotting) the geomembrane rolls or folded panels at the top of the dike or on the impoundment floor. Special or modified equipment may be required to move and locate the geomembrane without damage. The panels are unfolded or unrolled down the side slope or across the floor. The panels are then placed in the proper position and secured with sandbags to protect them from wind damage or displacement. The geomembrane should lie relatively flat and smooth after placement on a smooth compacted subgrade. Sufficient slack should be left in the material to accommodate shrinkage due to temperature changes. Depending on the characteristics of the geomembrane material, shrinkage can occur by temperature increases and decreases. Temperature increases can cause shrinkage by loss of volatiles and by release of manufacturing stresses (Giroud and Peggs, 1990). Shrinkage also occurs by contraction induced by lowering

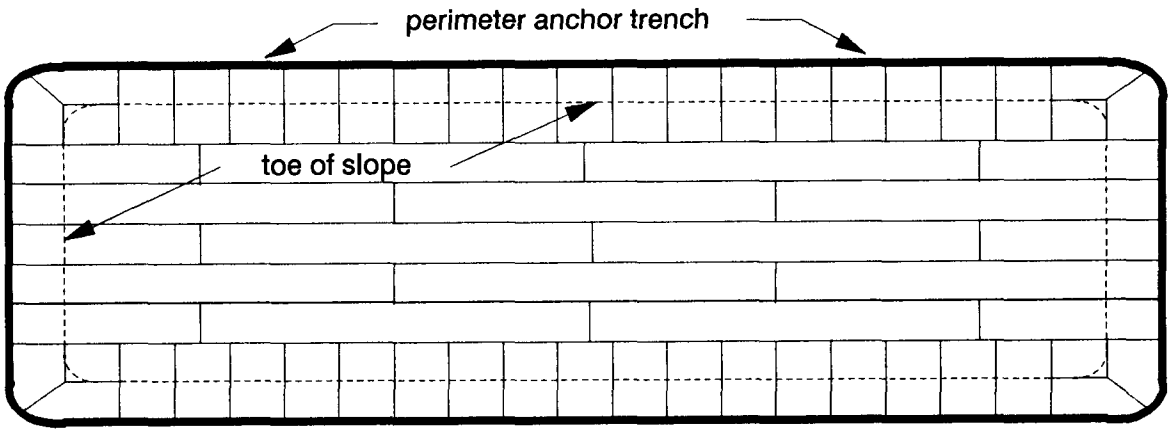

Figure 38. Example of geomembrane liner panel layout. Other patterns may be used.

the temperature. Temperature increases can also expand a geomembrane during installation, creating wrinkles where cracking can later occur. It is a very important aspect of design and construction to accommodate all shrinkage- and expansion-causing factors so that failure-inducing stresses, particularly at seams, are minimized.

The success or failure of a geomembrane installation depends largely on seam integrity and continuity. USEPA (1983b) lists a number of seaming methods and factors which affect field seaming, not the least of which are the skill and experience of the installer. Seaming methods vary among geomembrane materials. Common field seaming methods include the following:

- Thermal (hot air gun, hot wedge and dielectric)
- Heat (extrusion fillet or flat welding, and extrusion/wedge welding)
- Chemical (cement, solvents and vulcanizing adhesive)
- Adhesive Tapes

Recommended panel overlap, where the seam is located, varies from 4 to 12 inches (10 to 30 centimeters). However, the installation contractor must follow the surface impoundment design specifications, which, in turn, should include the manufacturer's recommended overlap and bonding systems. The following factors must be considered in constructing field seams of high integrity:

- Manufacturers' guidelines for adhesives must be followed. The adhesive system must be compatible with the geomembrane and be applied under acceptable ambient conditions.

- Cold temperatures can prevent successful bonding of panels. Many manufacturers recommend that adhesive bonding take place only when temperatures are above 15°C (59°F).

- Preparation of panel edges for seaming must be carefully done to prevent damage. For example, grinding can create deep scratches that may result in cracks (see USEPA, 1989c).

- The seam surface should be clean and dry. The presence of moisture interferes with the curing and bonding characteristics of the adhesive, while the presence of dust creates voids that provide a path for fluid migration through the seam.

- The geomembrane should rest on a dry, hard, and flat surface to facilitate applying pressure rollers.

- Panels should be placed and seamed on the same day to minimize the risk of geomembrane damage by wind, and soil erosion under the geomembrane due to rain; unfinished panels should be anchored by bags of sand.

The finished seams should be free of large wrinkles and the surface should be rolled flat. Many manufacturers recommend that field seaming begin at the panel center, lengthwise, and continue to each seam end; this procedure minimizes the potential for large wrinkles.

As in soil liner compaction, proper placement of the geomembrane on the impoundment side slope is essential to successful liner construction. Generally, the panels should be of sufficient length so that, when placed the field, seams run up and down the side slopes, with no horizontal seams on the slopes (Figure 38). This orientation reduces gravitational stress on field seams, particularly desirable when seams have not yet cured. Corner patterns should be cut to fit where necessary, and in a way that minimizes horizontal seams on the slope.

4.4.5 Sealing Around Structures and Anchoring the Geomembrane

The geomembrane is anchored at the top of the dike in a trench, V-shaped or U-shaped in cross section (Figure 39(a) and (b)). This technique is often recommended by manufacturers, due to its simplicity and economy. Excavating the anchor trench is done using a trenching machine or a bulldozer blade tilted at an angle. The excavated soil should be spread away from the trench and smoothed to facilitate unrolling and spotting of panels.

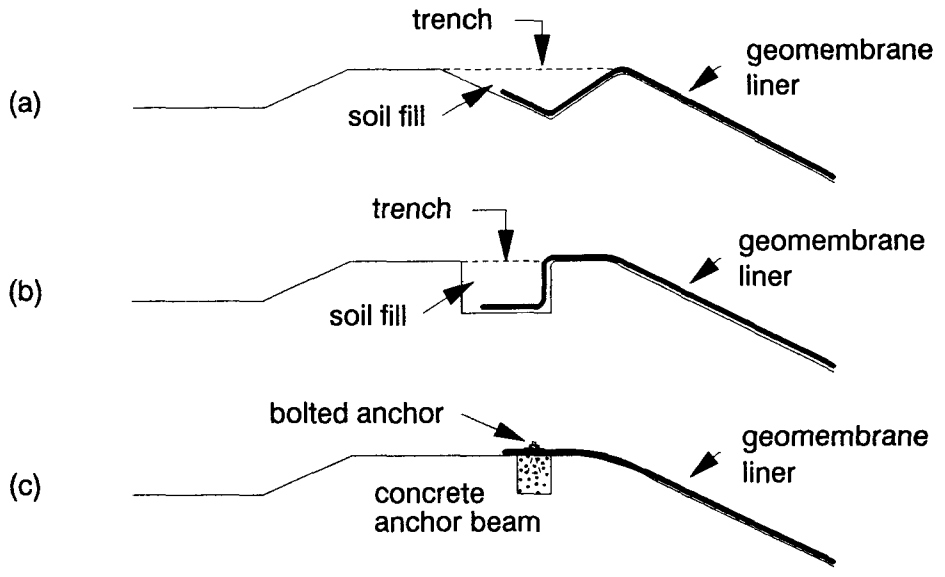

Figure 39. Geomembrane anchor designs at top of dike.

The panels should be anchored in the trench following the field-seaming operation unless other components (e.g., synthetic drainage layer) are also to be anchored in the trench. Once the seams are completed for an individual panel, the trench should be backfilled with soil to anchor the panel. The trench should not be backfilled until the panels have been seamed, to allow positioning for optimum seaming.

The geomembrane can also be anchored to concrete structures along the berm top by securing the liner with batten strips attached to anchor bolts embedded in the concrete (Figure 39(c)). This technique can also be applied to bonding the geomembrane to metal structures (e.g., pipes). A common method places the anchor bolts on 6- to 12-inch (15- to 30-cm) centers. The geomembrane is placed over the bolts, an adhesive is applied to the membrane, and the batten strip is secured and bolted in place. Compatibility of the adhesive/sealant with the synthetic and the impounded liquid must be determined during impoundment design to assure the integrity of the seal. An extruded polymer strip may be cast in the concrete and the liner welded to it as an alternative to the batten strip and bolts. Details of anchoring techniques are discussed by USEPA (1984d) and Kays (1987).

Manufacturers' recommendations for using specific materials and procedures must be followed to establish an effective seal around penetrations through the geomembrane. Bonding synthetic materials (e.g., the geomembrane and a plastic pipe) is typically accomplished using solvents, adhesive, or welding techniques. Where components of different materials are to be bonded, it must

be verified before installation that the materials can be successfully bonded using one of these techniques. For example, the thermal-expansion characteristics of each material must be evaluated to determine if temperature-driven expansion and contraction cycles will permit an effective bond.

Wherever possible, pipes, level control equipment, and other structures should be placed entirely above or beneath the geomembrane to avoid penetration. If penetrating structures are included in the impoundment design, sealing the geomembrane effectively around the structure is critical to liner integrity. Standardized designs include pre-engineered seals installed in the plane of the geomembrane, and pre-formed boots for installations around penetrations (Figure 40). If pipes are installed in the impoundment through a concrete structure, the seal can usually be made in the plane of the liner.

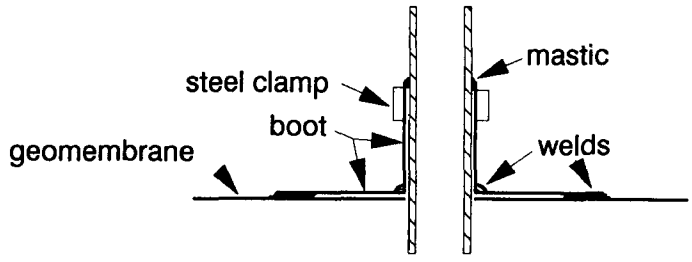

boot seal at geomembrane liner

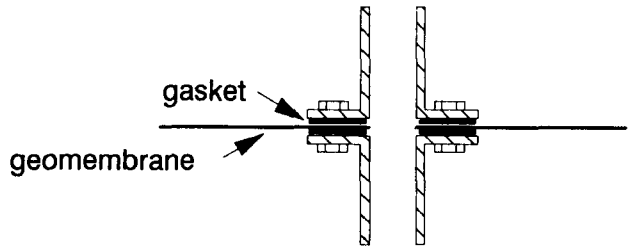

flange seal at geomembrane liner

Figure 40. Seals at geomembrane liner penetrations.

4.5 LEAK COLLECTION AND REMOVAL SYSTEMS

The leak collection and removal system is designed to drain and pump out liquids accumulating in the liner system. Typically, the leak collection system consists of a granular material (sand) immediately overlying a hydraulic barrier (liner). The system's ability to drain away moisture is enhanced by constructing the system at a minimum bottom slope of 2

percent, using highly permeable drainage media and engineered geotextile filters, where needed, to prevent migration of fine-grained soils into the media, and by spacing drain pipes properly.

The leak collection layer is normally constructed to extend up the side slopes. The development of synthetic drainage nets (geonets) has resulted in many surface impoundments being constructed with side-slope leak collection layers of synthetic materials and bottom drainage layers of granular material and drain pipes. Synthetic drainage net material is used on side slopes instead of granular systems because it is more easily installed on steep side slopes. Steep side slopes cause granular drainage material to slump down, while the synthetic drainage material tends to remain in place if anchored properly at the top of the slope (refer to Figure 18).

A typical leak collection and removal system is installed as follows. A layer of sand (about 2 inches [5 cm] thick) is spread over the underlying layer (e.g., a geomembrane) as a protective soil covering. It should consist of material which is free of clods, stones, or other sharp objects that can puncture the geomembrane. Optionally, a geotextile layer may be used. The 2-inch (5-cm) protective layer will also provide bedding for the drain pipes according to the design layout. If a geotextile protective layer is used, a bedding layer is placed only along the pipe alignments for pipe support. Typically, perforated pipes of 4 to 6 inches (10 to 15 cm) in diameter are used. Pipe perforations are placed face down to prevent clogging by the drainage media. After the pipes are placed, the remaining granular material is spread over the area in a single loose lift to the required thickness, and compacted with a vibratory roller into a firm base for the primary geomembrane liner. If a gravelly drainage layer is used, a geotextile protective layer should be placed over the surface prior to placing the primary geomembrane. Figure 41 is an example of a leak collection system layout.

If synthetic drainage materials (e.g., geonet and geotextiles) are used, they should be unrolled and spotted as in geomembrane installation, except that the panels are not overlapped and seamed. The panels are placed edge-to-edge and connected according to the manufacturer's suggested procedures, so that the lower portion of the side-slope panel extends into the granular or other bottom layer to enhance continuity between the drain layers (refer to Figure 18). A geotextile is placed on both sides of the drain panels to prevent intrusion of the geomembranes due to compression or creep phenomena (Figure 42). The synthetic drain system is then secured in the anchor trench as in the geomembrane liner installation.

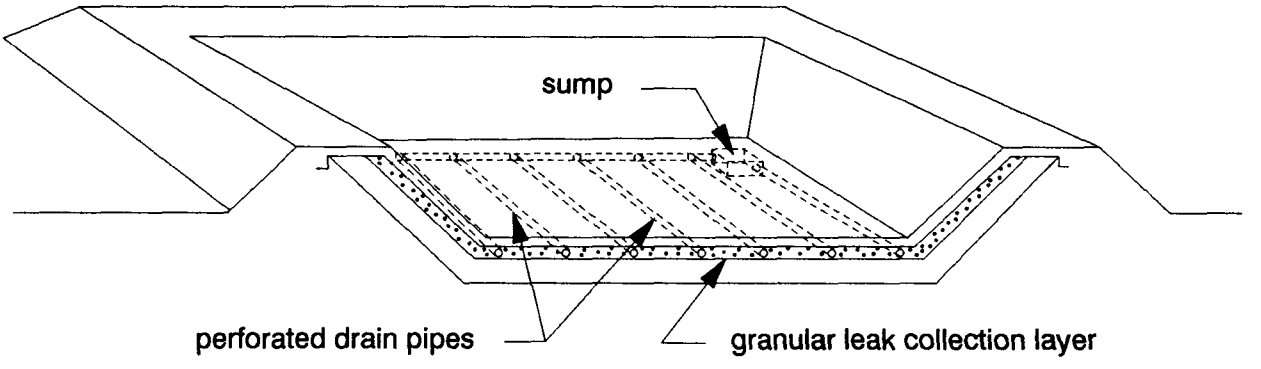

Figure 41. Example leak collection system layout.

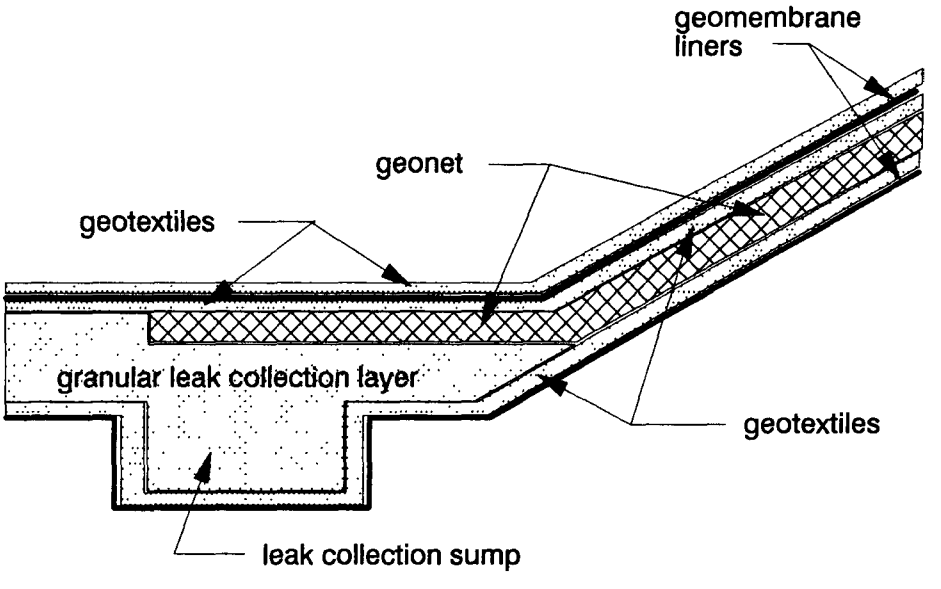

Figure 42. Geosynthetic uses in leak collection layer.

4.6 TESTING THE LINER SYSTEM

After the liner system has been installed, it should be tested for leaks due to pin holes, inadequate seams, and punctures. Methods for liner testing prior to operational start-up include filling the impoundment with water and monitoring the leak collection system for liquid. This method or procedures that use in-situ and remote (e.g., electrical resistivity) leak detection techniques permit the identification and repair of leaks in the primary liner before waste is placed in the surface impoundment. Unless a leak detection system has also been

installed below the secondary liner, the integrity of the secondary liner cannot be tested.

4.7 PROTECTIVE COVERINGS

As discussed in Section 3.7, and shown there in Figure 21, protective coverings are constructed or installed as preventive measures against erosion, weathering, or other degradation of the impoundment's structural components by mechanical and environmental forces. Coverings may consist of natural material (e.g., soil, stone, and vegetation) or synthetic materials (geotextiles). The following discussion covers construction and installation of protective coverings for liner systems and dikes.

4.7.1 Liner Protection

Protection of the primary liner is often provided by a soil cover of sufficient thickness to prevent environmental or mechanical damage. If the liner is a geomembrane, placement of the soil cover must be accomplished so that the synthetic material is not damaged. Geotextile bedding may be placed between the soil and geomembrane (Figure 21). The soil cover should be placed using low-contact-pressure equipment (to avoid puncturing the liner) in a thickness of no less than 18 inches (45 cm). Though not necessary, placing the soil at or near optimum moisture allows slight soil compaction by equipment traffic. The cover soil material must be free of clods, stones, or other sharp objects which can puncture the geomembrane.

Synthetic materials may also be used in some cases for liner protection instead of soil; for example, the liner may be covered with a geotextile for short periods of time. The synthetics must be placed according to manufacturers' suggested methods, and the engineering plans and specifications for the facility. The synthetic materials are generally less thick than a soil cover and, therefore, may be layered (e.g., several layers of geotextile, drainage layer, or both) to provide a thickness which will protect the liner from weathering or puncture. As noted earlier, a reduced-thickness soil protective layer may be placed on the geotextile for added protection.

4.7.2 Dike Protection

Dike protection consists primarily of vegetation and/or riprap (Figure 21). Establishing a vegetative cover on the dike exterior and top surfaces is typically accomplished by hydroseeding, broadcasting, grass or grain drills, blowers, or hand planting. The best-suited seeding method depends on topography, type of vegetation, soil condition, and equipment

availability (Lee et al., 1985). The soil usually requires physical and chemical treatment before vegetation can be established. Physical treatment includes tilling and adding topsoil. Chemical treatment includes applying fertilizer or lime. After seeding, the soil should be watered and mulch applied to prevent erosion until the vegetation is established. Seeding the dike slope may also be accomplished by placing degradable nets on or just below the soil surface to provide soil stability until the vegetation becomes established.

Riprap may be used as dike protection on the inside slope or on both sides (Figure 21). Riprap placement is discussed by the Bureau of Public Roads (1967) and USACE (1977). Riprap should be placed over a geotextile filter selected to prevent washout of the underlying protective soil layer. The stone may be placed using a dragline or similar equipment, or dumped on the dike slope by transport vehicles, spread into place, and compacted with a grid roller if required. Riprap should not be placed directly on a geomembrane, but should be separated from it by a buffer material of soil as in Figure 21. Other materials that may be used for dike protection include synthetics or geogrids, concrete, and asphalt. These should be placed according to manufacturers' accepted methods, and the facility engineering plans and specifications.

4.8 LIQUID LEVEL CONTROL SYSTEMS

Active liquid level controls are installed equipment that control daily level changes within the impoundment. Passive controls are engineered and constructed into the dike. Passive controls function in emergencies to prevent liquid overtopping and catastrophic failure.

4.8.1 Active Liquid Level Control

Construction associated with active liquid level control systems consists primarily of erecting mounting structures (e.g., piers or pilings) needed to suspend a sensor over the liquid surface. The preferred arrangement is to locate the mounting structure outside the impoundment and extend it over the liquid surface (see Figures 24 and 25). This arrangement has no contact with liner-support components and no liner perforations as potential leak sources. An alternative design is to construct a mounting structure that rests on the impoundment bottom, but does not penetrate or abrade the liner. Both approaches preserve liner system integrity and are preferable to mounting structures that penetrate the liner. If the design requires that the structure penetrate the liner, QC should be diligently exercised to maintain the integrity of the seal at the liner penetration.

Regardless of the mounting structure selected, installing the liquid level sensing system properly, according to the manufacturer's specifications, is essential. The system will be integrated with facility inflow and/or outflow devices, monitoring devices, and alarms to control the liquid level in the impoundment. The installed system should be tested to verify that its components function properly. Testing should include deliberate attempts to test the fail-safe aspects of the system. A record of testing procedures should be maintained for reference during routine system maintenance.

4.8.2 Passive Liquid Level Control

Passive outfall structures allow the release of liquid when the freeboard level is exceeded. Release is accomplished by one of two general means: (1) through an opening at the dike crest (e.g., weir, spillway, or flume); or (2) through a conduit (e.g., pipe) extending through the dike and liner system (see Figures 22 and 23). Generally, outfalls provided by an opening in the dike crest are preferred for a surface impoundment because no liner system penetration is required.

The primary concern associated with constructing spillways, weirs, flumes, or conduits is ensuring an effective seal between the outfall structure and the liner. The surface impoundment liner system generally includes synthetic materials which require bonding to the outfall. The outfall may possibly be constructed from the same synthetic material used to line the impoundment, thereby minimizing the bonding problem. However, the material used for the outfall will often differ and a special bonding procedure will be required.

4.9 SECONDARY CONTAINMENT

The secondary containment structure for a surface impoundment is typically a low dike or berm surrounding the facility (Figure 25). The secondary containment berm is constructed in the same manner as the primary dike and consists of compacted lifts of soil. Given the inherent stability of its typically low design, a secondary containment dike can often be compacted effectively with several passes of transportation or dozer equipment. However, field density tests should be conducted to determine that compaction using this method is adequate.

The surface of a secondary dike should not require armored protection from erosion, unless it is in an area of potentially rapid-flowing flood waters. Vegetation should be adequate to the task, similar to vegetation on the primary dike, as discussed in Sections 4.7.2 and 3.2.3.2.4.

CHAPTER 5

OPERATION, MAINTENANCE, AND MONITORING

This section presents guidance on routine operation and monitoring of surface impoundments. Most aspects are similar for all surface impoundments.

5.1 OPERATION AND MAINTENANCE ACTIVITIES

The information in this section emphasizes current industry practice for operating and maintaining surface impoundments for waste treatment, storage, and disposal. The discussions expand upon previous work (e.g., USEPA, 1983a and 1984a).

5.1.1 Facility Start-up

The start-up procedures for a new surface impoundment should lay the framework for future facility inspections. The initial inspection should document baseline conditions against which future operating decisions are made.

A dormant period usually occurs between the time that construction is completed and the time that final approval for use is obtained from regulatory agencies. During this period, several "dry-run" inspections can be made by the operating personnel to perfect procedures, to train personnel conducting the inspections, and to become familiar with various structures and equipment before use. Before the surface impoundment is placed in service, structures and equipment should be maintained and protected from weather damage. Storms present the potential for erosion of dikes and side walls, and to cause flow, level, and volume gauges to operate. These components must be checked and maintained until the facility is ready to accept waste. A small pool of water should be maintained in the impoundment to prevent the protective soil layer covering the liner from drying out. Dike side slopes and top surfaces should be watered regularly to prevent desiccation and to facilitate the initial growth of newly planted vegetation.

A final inspection of the entire facility must be made before start-up. If inflow will enter the impoundment through pipes, all piping, pumps, valves, controls, gauges, and manual

controls must be inspected and shown to be in working order before they are used to accept waste. If discharge to the surface impoundment is directly from tank trucks, the discharge area or ramp must be thoroughly inspected before use. Emergency discharge pipes or spillways must also be inspected to ensure that they are free of debris and ready for use. These items should be covered in the CQA Plan discussed in Section 3.11.

5.1.2 Routine Inspections and Maintenance

The RCRA Part B permit application describes the frequency and detail of inspection for each hazardous waste surface impoundment system component. When conducting an inspection, the inspector should document the nature and extent of problems noted. The inspector should follow up the inspection with a report noting remedial actions taken to correct deficiencies, the time required for correction, special problems encountered, and suggestions for preventing recurring problems. Inspections can be expected to be conducted periodically by the regulatory agency and more frequently by the impoundment's operating personnel.

5.1.2.1 Regulatory Inspections of Facility --

Agencies responsible for inspecting surface impoundments usually have an inspection checklist which emphasizes those areas that serve as "trigger" points; that is, a problem noted in a particular area which usually reflects the existence of a larger problem, which may be less apparent, and triggers a more in-depth investigation. Prudent facility operators will include a similar checklist for routine inspections so that problems can be corrected before more troublesome conditions develop.

Particular questions to be answered during routine inspections include, but are not limited to, the following:

- Does the surface impoundment appear to provide at least the design freeboard?

  To determine this for a nearly full impoundment, the inspector should look for erosion on protective soil cover due to wave action. On geomembranes, the inspector should look for lines of algae growth, salt deposits, and oil and grease marks. If evidence exists of erosion, or markings are evident on the geomembrane, less than the design freeboard vertically below the lowest point on the dike summit (e.g., a spillway), then adequate freeboard is not being maintained. The inspector should also examine outfall structures for evidence of overtopping. The inspector should ask for records of impoundment inflow and discharge volumes and compare these to level-

recorder data to obtain an impoundment volume estimate based on a simple mass balance. Large discrepancies in the balance volume estimate may suggest possible leakage and should be followed by a more detailed evaluation, including checks for possible leaks.

- Do the dike's crest, side slopes, abutment, and toe areas have protective cover (e.g., rock or grass) to minimize wind and water erosion?

  In addition to inspecting these components for signs of erosion, the inspector should look for dead vegetation, oil stains, salt or mineral deposits, seep areas, slumping, irregular settling, sink holes, slides, sloughs, bulges, cracks, animal burrows, roots of shrubs or trees, and other visible evidence of problems. Although some of these items may reflect merely the need for simple maintenance, most indicate the potential for leakage through the dike.

- Is the emergency spillway or overflow structure clean?

  The inspector should look for animal nests, collections of leaves or other detritus that could impede flow, and signs of an overflow (e.g., oil and rust stains).

- Do the emergency (manual) shutoff valves on the influent line work properly?

  The inspector should determine if these valves can be shut off quickly in an emergency.

- Does the emergency and safety equipment work? Is it clearly labeled and accessible?

  This is normally a fairly quick check and is an indication of the impoundment management's attitude toward overall safety and emergency preparedness.

- Is the leak collection/detection system operational?

  Pumps and detection devices should be checked to assure that they function. Routine operational records should be examined for frequency of operation and operational results. Sumps should be checked for liquid level.

- Are geomembrane liner problems apparent?

  If the geomembrane liner is visible (no protective soil cover), the inspector should look for signs of abrasion or tearing along the top edge due to vehicular traffic or other activities. The inspector must also determine if

"whales" are present; that is, gasses forming under the geomembrane which cause it to rise. If the liquid is sufficiently clear, the inspector should look for ripples on the impoundment bottom, or stretch folds along the side slopes. This unevenness is frequently accompanied by liquid beneath the geomembrane. Such liquids should generally be intercepted by the leak collection/detection system. Visible seams and geomembrane anchoring should be checked for signs of weakness.

5.1.2.2 Operator Inspections of Dike Slopes, Faces, and Crest --

The dike system should be inspected by operating personnel weekly and after rain, ice, or wind storms for the following:

- liquid level exceeding the design freeboard;
- wave erosion on the interior embankment;
- erosion due to precipitation or irrigation runoff;
- seepage along toe areas; evidence includes wet or spots, mineralization spots, discoloration or dying vegetation;
- soil movement; evidence includes irregular bank alignment, slides, sloughs, bulges, or depressions;
- animal burrows and shrub or tree growth on dikes;
- fractures or cracks in the crest, embankment slopes, toe areas, or around structures such as spillways and leachate sump pipes;
- damage to crest and interior wall due to traffic when discharge to the impoundment is from vehicles;
- spillage on the crest or outside the embankment at unloading dock or ramp; and
- damage from vehicles or other agents to geomembrane anchorage along the crest.

5.1.2.3 Operator Inspections of Ancillary Site Facilities --

The surface impoundment design normally includes a liquid level indicator and hard copy recorder; leak collection/detection system; emergency spillway or other discharge structure; a system to discourage birds and other animals from using the impoundment;

survey reference points; a weather station (if needed); inlet pipes and valves and/or a vehicle unloading area; security equipment; and health, safety, and emergency response equipment.

A routine inspection and maintenance program for these facilities should be incorporated into the owner/operator's operation and maintenance protocol. The following should be included in the inspection program:

- The liquid-level indicator should be checked for freedom of movement and response. Grease or scum accumulations can adversely affect response. The chart recorder should be checked for calibration and ink supply, as specified in the manufacturer's guidelines.

- Leak collection systems should be checked for component deterioration (e.g., pipes and locks). Pumps should be inspected for proper operation. The sump should be checked for presence of liquid and, if any is present, a sampling program should be initiated to characterize the material. Liquid-level indicators or recorders, if present, in leak-collection sumps should be inspected and maintained as necessary.

- The emergency discharge outfall structure should be checked for cracks, and damage due to mowing or other vehicular contact. Debris or excessive plant growth that may impede its operation should be removed.

- Devices to ward off animals (e.g., plastic banners, fences, and electrically charged wires) should be inspected routinely.

- Elevation reference points or survey markers should be inspected for damage. These reference points should be surveyed annually to monitor soil stability.

- Weather stations (if present) should be inspected per the manufacturer's operation and maintenance protocol.

- Impoundment inflow structures must be inspected to assure that valve systems and recorders work properly, and that piping is not deteriorating. If an unloading dock is present, the liner immediately below the unloading point should be checked for impingement or other damage. The crest area and outside dike wall should also be checked for waste spills.

- Security equipment (e.g., locks and/or locking caps on leak collection sump lines, monitoring wells, gates, and fencing) should be checked to verify that the equipment operates and tampering has not occurred.

- Health, safety, and emergency response equipment (e.g., air sampling systems, safety showers, eye-wash stations, respiratory protective equipment, fire-fighting equipment, caustic and acid neutralization materials, protective clothing, first-aid kits, air horns or flashing lights, and radio systems) should be inspected and maintained according to the manufacturer's recommended procedures. In addition, personnel must receive periodic training in proper equipment use.

5.1.2.4 Liner Systems --

Routine facility operations pertaining to liners include detecting and locating leaks, determining causes of liner failure, maintaining and operating collection systems and pumps, and periodically removing accumulated solids. These topics are discussed in the following paragraphs.

Detecting and Measuring Liner Leakage -- USEPA (1987i) has proposed that the impoundment operator have the capability of detecting a leak through the primary liner as small as 1 gal/acre/day (9.35 liters/hectare/day). Also proposed has been an "action response level" and a "rapid and extremely large leakage" rate. The first is a low rate (to be established) between 5 and 20 gal/acre/day (47 and 187 liters/hectare/day) and the second is the rate, when exceeded, that leads to a hydraulic head greater than the thickness of the leak collection layer. These rates are used as bases for certain leak response actions, as described in the proposed requirements for Response Action Plans, called for under RCRA (USEPA, 1987i).

Continuous monitoring of the leak-collection system should be considered good practice. This can be accomplished by continuous liquid-level recording in collection sumps. An increase in level would be prima facie evidence of a leak in the primary liner. Monitoring for leaks can also be accomplished by electronic leak detection methods as described in Section 3.5, and backed up by sump level monitoring.

If leakage through the primary liner is suspected, one procedure for establishing its existence and magnitude is to pump the leak collection system dry, measure the amount of recovered liquid, and note the rate at which the system refills. Recovery of all the material leaked is not necessarily expected because the drainage layer will retain some liquids (up to the system's "field capacity"). If the underlying secondary liner is compacted soil, it, too, will absorb and retain some liquid. By estimating the total volume of leak-saturated material, the liquid volume retained by the various soil components can be estimated.

If leakage occurs in a small area, its location may be determined by a remote or in-situ leak detection system before the leak-detection layer becomes fully saturated. It is thus possible for the leak to be detected before it reaches the collection sump.

The liquid pumped from the leak-collection system can be managed as a "pump back" problem by returning the leaked liquid to the surface impoundment. This allows the operator additional time to plan and devise appropriate remedial actions. Criteria for determining the type of remedial action required when leakage occurs through surface impoundment liner systems is discussed in Section 6.3.3.

If the amount of recovered leakage indicates a significant loss, or if pump-back rates and leakage rates differ, then the secondary liner may also be leaking and contaminants escaping to the environment. This may be cause for cessation of operations and emptying (and perhaps closing) the impoundment.

Leak-detection technologies should be used to locate the source point of small leaks in the primary geomembrane liner. Similar technologies may be used for early detection of releases to the subsurface soil beneath the secondary liner. Several reliable methods are available to detect and locate geomembrane leaks larger than 0.1 to 0.2 inches (2 to 5 mm), but smaller pin-hole leaks are more difficult to find. Remote and in-situ techniques to locate leaks are discussed in Section 3.5.

The flow of liquids through flaws in geomembranes depends on the size and shape of the flaw, the liquid head, and the hydraulic characteristics of the sub-base. In a recent study of the characteristics of leaks through geomembrane flaws, Brown et al (1986) found that leakage rates through slits and seam flaws, as might logically be expected, were much more variable than those through round holes. This is due to the variable hole sizes which can result when a seam or one side of a slit becomes displaced relative to the other side. The magnitude of leak rates for various geomembrane flaws is shown in Table 8.

Brown et al (1986) also investigated the effects of subbase hydraulic conductivity on the leakage rate through a defective geomembrane liner. Less-permeable soils containing greater amounts of clay had lower leakage through the geomembrane component because a better seal was formed between the geomembrane and soil components, allowing less lateral flow of liquids at the interface. Table 9, taken from Brown et al (1986), gives predicted leakage rates from various hole sizes in geomembranes overlying soils of varying hydraulic conductivities.

TABLE 8. AVERAGE LEAK RATES (m^3/yr) FROM DIFFERENT SIZE AND SHAPE FLAWS IN 30-mil (0.08-cm) HDPE LINER OVER GRAVEL AT TWO LIQUID HEADS. (1 m^3 = 264.2 gal)

Hole Shape and Size	Head (cm) 50	Head (cm) 100
	m^3/yr	
Round - 0.16 cm (.06 in.) diam.	110	145
Round - 0.64 cm (.25 in.) diam.	1482	2208
Round - 1.27 cm (.5 in.) diam.	4257	6780
Slit - 5 cm (1 in.) long	--	79
Slit - 15 cm (6 in.) long	3866	5623
Seam - 5 cm (1 in.) long	404	325
Seam - 15 cm (6 in.) long	4702	7244

TABLE 9. CALCULATED LEAK RATES (m^3/yr) FOR A RANGE OF HOLE SIZES IN GEOMEMBRANE LINERS OVER SOILS OF DIFFERENT CONDUCTIVITIES AND FOR THREE HEADS (H). (1 m^3 = 264.2 gal)

K_{sat} (cm/s)	Hole Diameter (cm) 0.08 (1/32 in.)	0.16 (1/16 in.)	0.64 (1/4 in.)	1.27 (1/2 in.)
		H = 0.3 m (1 ft)		
3.40×10^{-4}	19.30	31.50	43.20	50.60
3.40×10^{-5}	4.30	4.88	6.28	7.30
3.40×10^{-6}	0.54	0.60	0.77	0.89
3.40×10^{-7}	0.066	0.072	0.095	0.107
		H = 1.0 m (3 ft)		
3.40×10^{-4}	42.30	87.80	128.00	147.00
3.40×10^{-5}	12.80	14.80	18.70	21.40
3.40×10^{-6}	1.66	1.83	2.29	2.61
3.40×10^{-7}	0.20	0.22	0.28	0.32
		H = 10.0 m (3.1 ft)		
3.40×10^{-4}	167.00	438.00	1030.00	1170.00
3.40×10^{-5}	84.60	123.10	153.50	171.30
3.40×10^{-6}	14.30	15.60	18.80	21.00
3.40×10^{-7}	1.80	1.90	2.30	2.60

Determining the Cause of Liner Leakage -- If the cause of liner leakage is known, it may affect the type of repair that is made (i.e., strengthen a weak area). In addition it can provide information toward preventing a repetition of the same failure.

An unacceptable geomembrane leakage rate may result from imperfect seaming; rips, punctures, and tears that occur during installation, or later as a result of operational error; failures resulting from subsidence or shear failure of the supporting soil after installation; or exposure to incompatible wastes (e.g., concentrated organic solvents), which can dissolve either the plastic or plasticizer (Brown et al, 1986) of a geomembrane. Solvent attack can also permanently alter the fabric of a low-permeability soil liner should the leak extend to that component.

Leakage does not necessarily result from some events that may be considered liner failures. For example, holes above the liquid level caused by equipment misuse or by tension separation at seams, or anchor pullout, are failures, without immediate leakage. Leakage may be expected later in these situations as such areas of weakness propagate. The cause of liner failure above the liquid level may be observable and relatively obvious, especially if there is no protective soil layer. Below the liquid level, pumpout may be required, followed by a thorough inspection of the primary geomembrane liner. If the failure appears to be chemical-caused, an evaluation of the waste liquids and sludges contained in the impoundment and their compatibility with the liner may be in order.

When a liner is repaired or replaced, it goes without saying that the cause of the failure should not be allowed to repeat itself. In other words, repair or replacement should always be accompanied by elimination of the cause of failure before the operation of the impoundment is resumed.

Liner Repair -- Since liners meeting minimum technology requirements will have a geomembrane as the top or primary liner, a failed (leaking) system will certainly have a leak in that geomembrane. In the recommended system, the secondary liner will also have a geomembrane top component. Thus, the first two barriers are geomembranes. If the secondary liner is leaking, the primary liner is likely to be leaking also. With both leaking, repair becomes much more complicated and much less practical, than if only the primary liner is involved.

The options available for repairing the primary geomembrane liner depend on the type and cause of failure. Mechanical failures are often repairable by patching, re-seaming, or returning the geomembrane to its original position. If the primary geomembrane liner has not been significantly affected by

the waste, such as above the liquid level, or even below the liquid level if the waste and geomembrane are compatible, repair may be very practical. However, if the damage is below the liquid level, and particularly if the primary geomembrane liner's integrity or chemical structure has been compromised by the waste, repair may not be practical or even possible. In this case, the correction is to cease operations and close the impoundment or replace the entire liner. Repair and replacement and the difficulties encountered have been explored (USEPA, 1987d).

Solids and Liquid Removal -- Sludges that accumulate in the surface impoundment will need to be removed periodically, and disposed or temporarily stored. Also, solids removal is likely to be required following leak detection because maintenance or repair of leaking liners cannot be performed with liquid sludges and solids present.

The method selected to remove sludge from the surface impoundment must be non-destructive to the geomembrane liner and underlying leak detection/collection system, particularly if the impoundment is to be put back into operation. The use of shovels, scrapers, backhoes, etc. would not ordinarily be advisable for the removal of sludge in contact with the liner. Pumping would be more appropriate.

Several sludge pumping systems are available. If the liquid contained in the surface impoundment is to be removed and treated beforehand, the intake line should be mounted on a float to prevent pumping of bottom sludge. Sufficient liquid must be retained, however, to form a pumpable sludge slurry. Some of the liquid may be stored in tanks for washing sludge from the geomembrane. This eliminates the need to obtain and use additional water for liner washing, which would then need to be treated before disposal or discharge.

After sludge removal, a solidification-stabilization agent, such as fly ash, lime, portland cement, or a combination, may be used to stabilize the sludge. A pug mill or other mixing system should be installed in the immediate vicinity and sufficient space provided to allow easy vehicle access. Methods for stabilizing and/or solidifying hazardous wastes have been described in a handbook published by USEPA (1986g).

If sludge cannot be disposed of on-site, the owner/operator has two disposal options. Some sludges can be "delisted" (re-classified as non-hazardous) following mixing with Type II fly ash. If this can be achieved, the sludge may gain approval for disposal at a sanitary landfill. If the sludge cannot be delisted, it must be disposed in an approved hazardous waste disposal facility. In any case, loaders and transportation equipment will be required to handle the solidified material.

Waste liquid removed from an impoundment must be treated, or perhaps pre-treated and discharged to a municipal wastewater treatment system. The treatment must be consistent with the liquid composition and will vary depending on that composition. Treatment may be expected to produce more sludge that may require handling and disposal similar to that of the impoundment bottom sludge. Techniques to dewater and solidify sludges are discussed in Section 7.3.

Repairing the secondary liner, or replacing it, will require removal of waste, all or most of the primary liner, and all or most of the leak collection layer. Thus, in many, if not most or all, cases of secondary liner leakage, the entire liner system will require re-building. In these cases, closure may be the most practical solution.

5.1.3 Record-keeping

A complete inspection and maintenance program requires complete, comprehensive records of operating and maintenance actions. The date and nature of the activity, the details of the action taken, the time required to achieve the desired result, and the name of the person responsible should be recorded.

Documenting problems and solutions provides valuable knowledge for future designs and for solving recurring problems that may plague a waste disposal facility. Recurring problems indicate that a change in equipment, personnel training, supervisory practices, operational procedures, or some combination thereof may be needed.

Inspection and maintenance records should be kept in a safe place. Such records are required to be maintained and available for inspection by federal and state regulators.

5.2 SAMPLING AND ANALYSIS MONITORING ACTIVITIES

Routine monitoring activities applicable to a surface impoundment include sampling and analysis of hazardous waste, air emissions, ground water, and liquid from the leak collection and detection systems. The following sections discuss those activities required under current regulations, and those that are either recommended or pending with regulatory agencies.

5.2.1 Hazardous Waste Monitoring

Monitoring waste streams and stored wastes is an essential part of hazardous waste surface impoundment operating procedures.

Because hazardous wastes vary in their composition, degree of hazard, and treatability, the impoundment owner/operator must be familiar with the industrial processes that generate the waste; the physical, chemical, and biological properties of the waste; and any pretreatment processes used on the waste. This knowledge helps the owner/operator determine potential hazards associated with handling and storing the wastes, and aids in developing proper waste handling, isolation, and storage practices.

Federal regulations require that the impoundment owner/operator provide a list to the regulating agency of hazardous wastes that are stored, treated, or disposed of in the impoundment. This list must include the following information for each waste received (USEPA, 1984e):

- common name of each waste;
- chemical analysis of each waste;
- USEPA ID number of each waste;
- location of each waste at the facility;
- volume of each waste received per month (estimates from inflow structures or from transport vehicles such as trucks, trains, and barges);
- physical form of each waste received (i.e., liquid, sludge, or slurry);
- approximate moisture or solids content and other significant characteristics of each waste; and
- special handling requirements for each waste.

In addition, the owner/operator must record the physical characteristics of each waste according to the following classification (USEPA, 1984e):

- aqueous: inorganic and aqueous-organic (water is the solvent and inorganics or organics are the solutes);
- organic: the predominant liquids are organic in composition and the solutes are organic compounds dissolved in the organic solvent; or
- solids, sludges, and slurries.

After the waste is placed in the surface impoundment, routine monitoring (sampling and analysis) should continue to assess the physical and chemical behavior of the waste over time.

If the impoundment serves to temporarily store and physically, chemically, or biologically treat the waste, a routine sampling and analysis program enables the owner/operator to evaluate current waste status and to monitor the treatment process. This monitoring program is essential when an effluent is to be discharged under the facility's National Pollutant Discharge Elimination System (NPDES) discharge permit. Any effluent from a surface impoundment complex must be sampled and analyzed before and during its release into a stream, river, lake, or ocean via spillway or discharge pipe.

Collecting representative samples from a surface impoundment is often difficult due to inaccessibility. If the impounded waste is well-mixed, samples collected from any depth will be representative. However, if the wastes are stratified (i.e., waste density increases with depth), samples should be collected at different depth intervals at each sample location and the sample containers labeled accordingly. The number and locations of samples should be determined by a statistically valid random sampling plan. USEPA has established a protocol for statistically valid sampling (USEPA, 1986a).

A variety of sampling devices exists for collecting hazardous waste samples (USEPA, 1980a and 1986a; Franson, 1985). Liquid or semi-liquid waste samplers include the following:

- pond sampler or rod-and-clamp sampler (beaker attached to a telescopic aluminum pole);
- Kemmerer sampler (vessel with a trigger-activated closure at either end);
- subsurface grab sampler (bottle with a closing lid attached to an aluminum pole); and
- weighted bottle sampler (weighted bottle with corked lid).

The type of equipment selected depends on site-specific conditions. USEPA recommends using a pond sampler for sampling impounded liquid. If the physical form of the waste is a solid, sludge, or slurry, sampling equipment such as spoons, scoops, shovels, hand augers, or small-diameter push tubes should be used (USEPA, 1986). A boat or crane should be used to sample areas beyond reach from dikes (Crawley et al, 1985).

Sampling safety procedures should be tailored to the specific situation and documented in the sampling plan. Sampling may require special safety equipment, clothing, and personal precautions to guard against injury from the impounded waste.

Due to the complexity of wastes often handled in a surface impoundment, waste analyses may be complex. The owner/operator will usually have a written waste analysis plan from the RCRA Part B Permit (standard operating procedures) which describes sampling schedules, sampling methods, analytical methods, and a QA/QC procedure. Information on analytical procedures for analyses of wastes and wastewaters is given by Considine (1974), USEPA (1979a and 1982b), Franson (1985), and 40 CFR 261.

5.2.2 Air Monitoring

Hazardous VOCs, odors, and particulates emitted into the atmosphere during the handling and storage of hazardous wastes can adversely affect air quality. The influent liquid must be properly screened so that the emission potential can be predicted and the appropriate management plans developed to detect and control the emissions. Air quality over the impoundment must be continuously monitored to detect and quantify the VOCs being emitted. Current regulations do not specify which techniques should be employed for air monitoring.

5.2.2.1 Estimating Emissions from Surface Impoundments --

Several predictive mathematical models exist for estimating emission rates of VOCs at hazardous waste disposal facilities (USEPA, 1985c). Table 10 summarizes the recommended air emissions models for various types of facilities. The two models that apply to surface impoundment sites are the Mackay and Leinonen Model (ML) (1975) and the Thibodeaux, Parker, and Heck Model (TPH) (1982). Of these, the TPH model is most widely recognized by regulators. This model applies to surface impoundments under steady-state conditions (i.e., inlet rates, biodegradation rates, and waste constituent concentrations remain constant) and assumes that different waste species do not interact.

USEPA (1985f) determined rates of gaseous emissions from surface impoundments using several sampling techniques and compared the results to predictions from the TPH Model. The study concluded that the TPH Model appears to be generally applicable to several classes of compounds contained in surface impoundments that have no oily surface films or mechanical spraying devices. The presence of oily films on the impoundment surface caused the model to grossly overestimate the rate of gaseous emissions for several VOCs.

TABLE 10. RECOMMENDED AIR EMISSIONS MODELS FOR HAZARDOUS WASTE DISPOSAL FACILITIES.*

Source	Models
Landfill	Farmer et al (1978) - for covered landfills Thibodeaux (1980) - landfill equation w/o internal gas generation Thibodeaux (1981) - landfill equation with internal gas generation
Land Treatment	Hartley model (1969) Thibodeaux - Hwang (1982)
Surface Impoundment	Mackay & Leinonen (1975) - Unsteady-state predictive model for nonaerated surface impoundments Thibodeaux, Parker & Heck (1981) - Steady-state predictive model for nonaerated and aerated surface impoundments
Open Tank	Thibodeaux (1980) - Aerated surface impoundment (ASI) model Hwang (1970) - Activated sludge surface aeration (ASSA) model Freeman (1980) - Diffused air activated sludge (DASS) model
Storage Pile	Midwest Research Institute emission factor equations for storage piles
Fixed Roof Tanks	API (1962), modified by TRW/EPA -- Fixed-roof tank breathing losses API (1962) - Fixed-roof tank working losses
Floating Roof Tanks	API (1980) - Evaporation loss from external floating-roof tanks EPA/API (1981) - Standing storage losses from external floating-roof tanks EPA/API (1981) - Standing storage losses from internal floating-roof tanks

*from EPA (1984c)

Emission models for surface impoundments have been described in some detail by USEPA (1987e) in a volume dealing with treatment, storage and disposal facilities. Estimation models are described for quiescent, mechanically aerated, diffused-air, and oil-film impoundments for flow and non-flow situations.

5.2.2.2 Air Sampling and Analysis --

Air sampling generally involves collecting air over a given area via detection/concentration measurement devices or collection instruments. Direct sampling using an emission isolation flux chamber in contact with the liquid surface (Figure 43) has been used by researchers to measure emission fluxes of sulfur and VOCs from surface impoundments and other waste-handling facilities (Schmidt et al, 1982). USEPA (1985f) reported that the variability in emission rates using the flux chamber was typically much less than the variability using indirect sampling techniques, or predicted emission rates. The flux chamber appears to be the sampling device best suited to measuring emission rates from surface impoundments, provided a sufficient number of sampling stations are placed in appropriate locations.

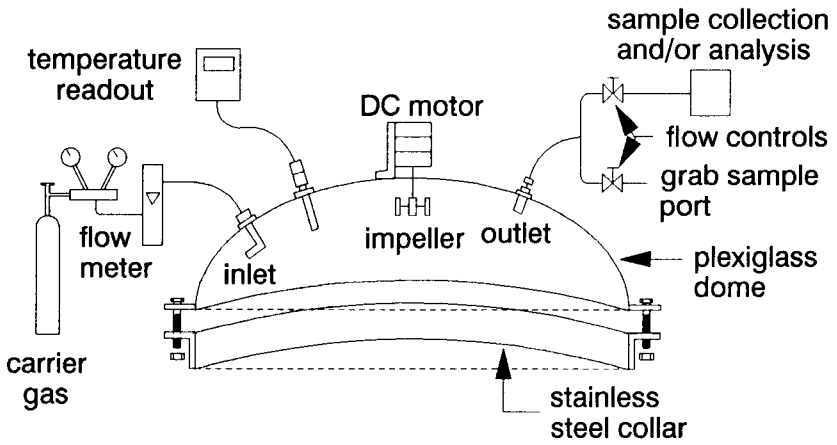

Figure 43. Cutaway view of emission sampling apparatus (USEPA, 1985f).

The flux chamber determines gaseous emission rates by passing clean, dry-sweep air through the chamber at a fixed controlled rate. The carrier gas flow carries with it VOCs present in the collection chamber. The carrier gas volumetric flow rate through the chamber is recorded and the concentration of the species of interest is measured at the chamber exit (USEPA, 1985f).

While the flux sampler is in operation, total hydrocarbon concentrations (THC) are monitored continuously in the chamber outlet gas stream using a photoionization detector (PID) or a portable flame ionization detector (FID). Once steady-state emission rates are obtained from the sampling chamber, gaseous samples can be collected for subsequent gas chromatographic (GC) separation and analyses.

Sampling containers using various solid sorbents can be used to trap low-molecular weight VOCs, while heavier VOCs are sorbed by Florisil, glass fiber filters, or polyurethane foam (USEPA, 1985f). Teflon bags and stainless steel containers have also been used to collect air (emission) samples. If the air monitoring program requires sampling of liquids or solids from the impoundment, the collection containers should be designed to minimize headspace to prevent loss of VOCs from the liquid.

Analyses of collected samples may be performed on- or off-site, depending on site conditions and available instrumentation. Two analytical methods described by USEPA (1985f) include the use of (1) a field-portable GC-FID, and (2) a laboratory-based capillary column GC-FID/PID/Electron Capture Detector (GC-FID/PID/ECD) with cryogenic concentration and subambient temperature programming. When liquid or solid waste samples are collected in conjunction with air samples, the analyses are normally conducted using purge and trap techniques followed by GC-FID/PID/ECD.

5.2.3 Ground-water Monitoring

Under current RCRA regulations, a ground-water monitoring and protection program must be implemented at all surface impoundment sites. The ground-water monitoring program has two parts:

- routine collection and analysis of ground-water samples to detect contaminants that may have leaked from the surface impoundment;
- if releases are detected, the collection and analysis of more ground-water samples over a wider zone to evaluate concentrations of contaminants, plume characteristics, and contaminant migration rates.

Intensive monitoring is implemented when contaminants have entered the ground water. It is continued through the course of remediation in order to evaluate the progress of that activity. More information on this type of monitoring is given by Canter and Knox (1985) and USEPA (1982e; 1983b; and 1986d).

The design of a ground-water monitoring program is based on an evaluation of site-specific conditions. These conditions include the characteristics of the wastes handled by the facility, and the subsurface geology and hydrology and the potential fate of the hazardous constituents. Guidance may be found on a ground-water monitoring design in a recently published handbook on ground water by USEPA (1987f).

A minimum of four monitoring wells is required to meet the objectives of a detection monitoring program (EPA, 1985a). One well is located hydraulically upgradient of the surface impoundment and three wells downgradient. Due to the often complex nature of a facility layout (e.g., more than one impoundment unit) and the complexity of subsurface hydrogeology, it may be necessary to install additional wells (Figure 44).

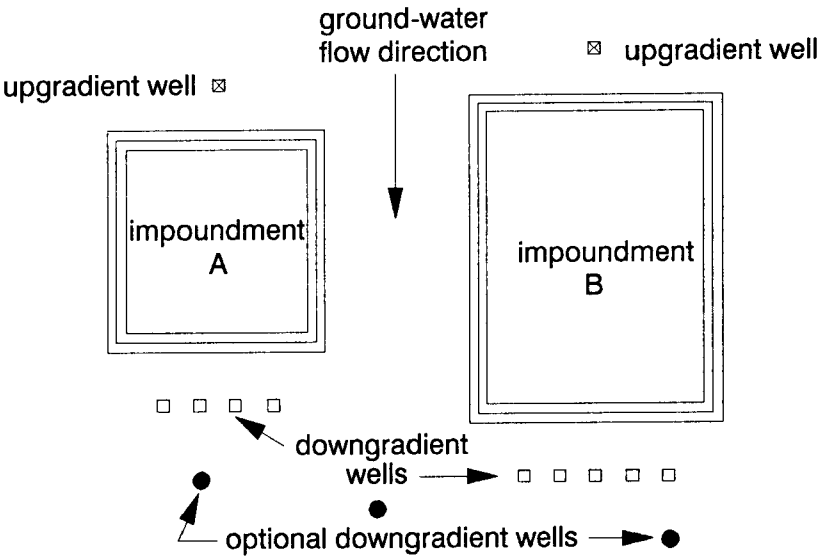

Figure 44. Example layout of ground-water monitoring wells.

As with leak detection in the impoundment liner system, the main objective of ground-water monitoring is the early detection of leakage after a failure of the liner system. Because many existing surface impoundments are not equipped with a sensory leak detection system, the monitoring wells located directly downgradient of the impoundment act as the "early warning" system. The number and location of downgradient wells, and placement of the screened intervals in each well, depend directly on the location of ground-water pathways along which migrating contaminants are transported. General regulatory guidelines for determining the number and spacing of wells have been provided by USEPA (1985a).

Guidance in selecting the best-suited drilling method for a given application (e.g., air rotary, water rotary, cable tool, etc.) has been provided by USEPA (1980b; 1985a; 1987f), Minning (1982), and Scalf et al (1981).

The type of construction materials used for well casings and screens depends on local hydrologic conditions and the chemical properties of the ground water and suspected pollutants (USEPA, 1985a; Lewis, 1982). Pettyjohn et al (1981) discuss well casing

materials and their suitability in the presence of various organic contaminants. Stainless steel, black steel, galvanized steel, polytetrafluoroethylene (teflon), PVC, polyethylene, epoxy biphenol, and polypropylene are commonly used materials.

In most cases, 2- to 4-inch (5- to 10-cm) inside-diameter (ID) well casing is sufficient for monitoring purposes. However, designing for possible future pumping activities (e.g., ground-water recovery) requires a larger-diameter casing. Some large-volume pumping units require up to 36-inch (90-cm) diameter casing.

Once constructed, a well must be developed by overpumping, surging, or jetting. The objective is to produce a clean, debris-free environment in the well bore. At the time of completion, the well should contain only formation water.

For all ground-water monitoring wells, documentation of design, construction, and completion is required by enforcement officials. USEPA (1985a) discusses the information that must be presented as a written record.

The RCRA-required Part B Permit Application for a hazardous waste surface impoundment includes a comprehensive written ground-water sampling and analysis plan, which discusses the following topics:

- sampling equipment
- sampling techniques
- sampling schedules
- sample handling and preservation
- sample analysis procedures
- field and laboratory QA/QC programs
- data collection and statistical analysis

Information on these topics is contained in references by USEPA (1984f and 1985a), Gillham et al (1983), Scalf et al (1981), and USGS (1985).

Each component of the written sampling and analysis plan must be closely followed to ensure sample integrity and data quality. Ground-water sampling and analyses must be conducted by trained personnel, and procedures should follow the techniques recommended by USEPA ground-water monitoring regulations.

5.2.4 Soil-vapor Monitoring

Monitoring soil vapors in the vadose zone just above the water table may be useful in detecting the leakage of volatile contaminants from the impoundment. Use of soil vapor probes is an inexpensive and rapid means to collect data that may indicate

a problem. Soil-vapor probes are designed to collect organic vapors that accumulate in, or migrate through, unsaturated soil zones (Figure 45). Field studies using soil-vapor sampling and analysis at ground-water contamination sites have indicated that the concentrations of VOCs in soil gases correlate strongly with the concentrations of those compounds in the ground water (Kerfoot et al, 1986). Soil-gas sampling should be conducted at surface impoundment sites by experienced operators of soil-gas equipment, where ground-water contamination has occurred or is suspected, provided suitable geologic conditions exist for using the soil-gas technique.

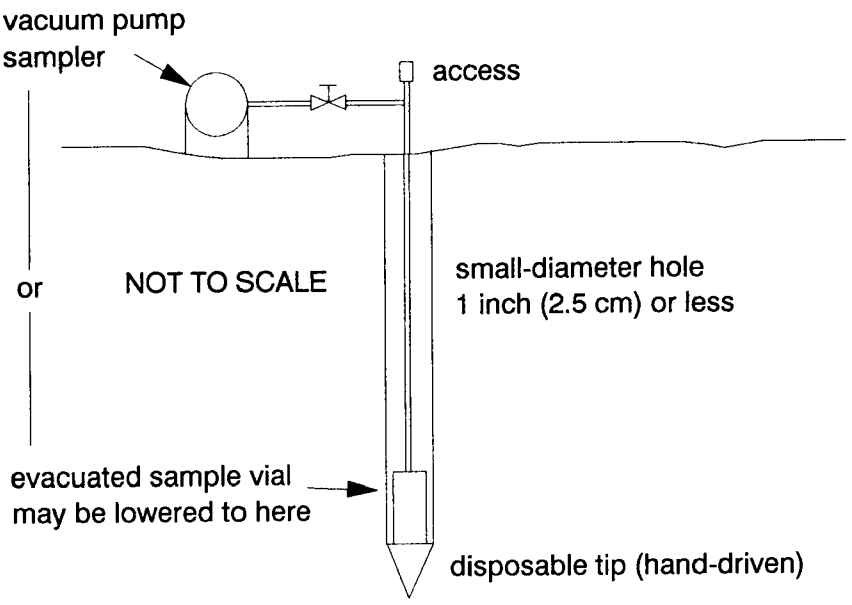

Figure 45. Schematic of soil-gas sampling probe.

5.2.5 Leak Collection and Removal System Monitoring

A leak collection system collects leakage accumulating above the secondary liner and channels the flow through a porous medium (i.e., sand and gravel) and piping networks to an outflow sump or collection basin. Primary liners tend to allow some release, and the intent is to have that waste liquid migrate through the collection system rather than enter the underlying secondary liner. The leak collection system serves another purpose, and that is to monitor the volume and chemical composition of liquid that may enter it (USEPA, 1983a).

The leak collection system generally consists of sampling and pumpout sumps along lateral lines or one sump at the system outflow. For sampling, small-diameter tubing may be inserted

into a sump and extended to the ground surface through a protective riser pipe (Figure 20). Samples are collected by pumping liquid up through the tubing. If excessive leakage occurs in the primary liner and several sumps are available, the general point-source area may be identified from increases in liquid volumes in one or more lateral sumps.

The sump at the system outflow, if any, can be sampled in a similar manner, although some outflow sumps are connected to the ground surface by a manhole and samples can be collected using bailers, pond samplers, grab samplers, or similar devices.

The sampling and analysis schedule for leak-collection systems depends largely on site conditions and the liquid volume moving through the collection system. If the system also serves as the primary method to detect liner leakage, liquid volumes should be monitored at least on a weekly basis. Continuous monitoring of the liquid level is preferred. Sampling for chemical analyses of the liquid should be performed periodically. Samples should be taken immediately upon the occurrence of changes in pumping rates that indicate possible leaks. In cases where the liquid is to be treated and either returned to the impoundment or released under an NPDES discharge permit, frequent analyses must be conducted on samples before and after treatment. Sampling techniques, sample handling and preservation, and analytical procedures are the same as those used in ground-water and waste monitoring.

CHAPTER 6

CONTINGENCY PLANNING

Owners and operators of surface impoundments must take precautions to protect human health and the environment from impoundment failures. In general, RCRA regulations and/or proposed RCRA regulations address three kinds of events that call for corrective or remedial actions. These are (1) sudden drops in impoundment level or dike leaks; (2) leaks through the top liner into the leak detection, collection, and removal system; and (3) whenever a ground-water protection standard is exceeded at a compliance monitoring point.

6.1 LIQUID-LOSS RESPONSE PLANS

All three release event possibilities must be addressed as parts of the facility permit and approved by the Regional Administrator. Sudden drops in impoundment level, and dike leaks, must be addressed as part of the facility's "contingency plan." Liner leaks are addressed in a "response action plan," and ground-water standards violations by "corrective action program" descriptions in the permit. Summaries of the pertinent regulations are provided in Subsection 1.3 of this document.

6.1.1 Contingency Plan

Contingency plans are required for all hazardous waste facilities. They must be submitted and approved as part of the facility permit. The general requirements regarding the plan content are provided in 40 CFR Parts 264 and 265, Subpart D. Additional requirements, specific to surface impoundments, are given in 40 CFR 264.227 and 265.227. Contingency plans address potential unintended, large, sudden releases of hazardous materials. These are the most threatening releases, measured in perhaps tens of liters or more per second, that require immediate response actions to minimize risk to human health and the environment. Immediate response actions might include evacuation of the affected area and mobilization of emergency response teams and spill mitigation equipment. The decision-making process and response should proceed according to the contingency plan.

The general components of a contingency plan are as follows:

- names, addresses, and phone numbers of emergency coordinators;
- locations, amounts, and characteristics of impounded wastes;
- potential hazards to human health or the environment caused by fire, explosion, or uncontrolled release of impounded wastes;
- list of emergency equipment, including descriptions and locations;
- evacuation plan for the surface impoundment facility;
- emergency response procedures (preplanned and discussed with local authorities);
- procedures to reduce and prevent exposure caused by sudden releases, non-sudden releases, fires, and explosions;
- procedures for removing the surface impoundment from service, containing leakage, shutting off inflow, preventing catastrophic failure, and emptying the impoundment;
- potential remedial actions, associated health hazards, decontamination procedures, and methods to provide personal safety for personnel carrying out remedial actions;
- location of contingency plan copies; and
- procedures for updating the contingency plan in the event of system modifications.

Table 11 shows an outline for a "response data sheet," summarizing many of the above points, which should be prepared for each impoundment and made a part of the contingency plan.

6.1.2 Response Action Plan

In proposed regulations, 40 CFR 264.222 and 265.222, published May 29, 1987, the USEPA proposed requirements for response action plans as part of the permit process for hazardous waste surface impoundments. These plans would deal with leaks of waste liquid through the top liner and into the leak collection and removal system.

TABLE 11. OUTLINE OF CONTINGENCY PLAN RESPONSE DATA SHEET.

==========

1. Emergency Coordinator(s)

   Name:
   Address:
   Phone:

2. Surface Impoundment Design

   Volume:
   Flow Controls:
   Flood Routing Data:

3. Properties of Impounded Hazardous Substances

   CIS Class:
   CERCLA Categorization (class and subclass):
   Physical/Chemical Properties:
   Hazardous Characteristics:
   Protection Level Required:

4. Spill Countermeasures

   Physical Countermeasures:
   Chemical Countermeasures:
   Land/Soil:
   Surface Water:
   Ground Water:

5. Emergency Equipment

   Type:
   Capabilities:
   Limitations:
   Location:

==========

USEPA has proposed two types of response action plans. The first, required to be submitted with the Part B permit application, would address a "rapid and extremely large leak." A rapid and extremely large leak is defined as the maximum that the leak collection and removal system can remove without the fluid head on the bottom liner exceeding one foot in a granular leak collection system. The head limit in a geosynthetic leak collection system would be equivalent to the geosynthetic thickness. The actual leakage <u>rate</u> for a rapid and extremely large leak would be site-specific, but might be expected to be several hundreds or thousands of gallons per acre per day.

The second type of response action plan, that may be submitted at a later date, even as late as the leak event, would address a leak through the top liner exeeding an "action leakage rate." USEPA has not determined that rate, but suggests in the preamble to the proposed regulation that it may be established at between 5 and 20 gallons/acre/day (47 and 187 liters/hectare/day). Based upon measurements of actual leakage through top liners at facilities that have been built under rigid quality control, Bonaparte and Gross (1990) have suggested an action leakage rate of 200 liters/hectare/day or about 21 gallons/acre/day for landfills. For surface impoundments, they found little leakage through a top geomembrane liner, and they suggest that an action leakage rate of 200 liters/hectare/day can be met if ponding tests or leak location surveys are carried out.

The proposed regulations would require that a response action plan include the following:

- description of the unit and the planned method of closure;
- hazardous constituents in the waste;
- events that may lead to a rapid and extremely large leak;
- factors affecting leakage into the leak collection system;
- mechanisms to prevent leakage out of the unit;
- assessment of responses that decrease leakage into leak collection system; responses may include limiting waste receipt, expeditious repair, or operational changes; and
- correlation of a range of leakage rates with different responses, indicating why others were not chosen.

For leaks above the action leakage rate but less than rapid and extremely large, the plan must include similar information, but the range of responses could be broader, depending on the severity of the situation. The options could include continuation of liquid removal, treatment and ground-water monitoring, or the maintenance of current operations.

6.1.3 Corrective Action Program

Either a spill or a liner leak could result in contamination of the ground water in the vicinity of the impoundment. In order for such a liner leak to occur in an engineered double-liner system, the response action plan would not have been effective, and both liners will have leaked.

system, the response action plan would not have been effective, and both liners will have leaked.

When a release has escaped a surface impoundment, and a ground-water protection standard has been exceeded at a compliance monitoring point, a corrective action program must be implemented. The corrective action program is required under 40 CFR 264.100 and must be initiated and completed "within a reasonable period of time." The terms of the program are specified by USEPA's Regional Administrator in the facility permit. In the permit, he establishes the ground-water protection standard for the site.

Corrective actions, such as removal or treatment of the ground-water contaminants, must be adequate to bring the ground-water at and downgradient of the compliance point to levels that meet or exceed the standard.

6.2 TYPES OF FAILURE

A surface impoundment failure is manifested by a loss of impounded waste liquid. Ordinarily, the loss will be one of two types, (1) a sudden catastrophic loss, or spill, or (2) a liner leak. As noted above, the two types are reflected in the different requirements for contingency plans and response action plans, respectively. The spill type would be characterized by a large volume lost in a short time, with the flow perhaps measured in tens of liters per second, whereas the leak type might be measured in cubic centimeters or smaller per second.

A surface impoundment spill situation would be expected to be associated with a foundation or dike failure. Causative factors might include unstable soil on dike slopes, very high precipitation and dike overtopping, or subsurface weakness (solution channel or sink hole). The last of these might result in a spill to ground water, whereas the first two would result in surface spills. Spills, because of inherently higher volumes, are usually emergency situations. The real possibility of spills justifies the contingency plan.

The hazard associated with a sudden release or spill involves immediate, short-term exposure to hazardous liquids. In this situation, the appropriate emergency response involves attention to the safety of persons, immediate spill control, cessation of process operations, notification of regulatory and local authorities, and implementation of remedial activities for treating, storing, or disposing of contaminated soil and water.

Leaks can be associated most often with weaknesses in the impoundment liner, such as pipe penetrations and liner attachment to structures. Leaks may also be attributed to accidental

puncture, parted seams, tensional tears, and low chemical resistance of the liner. Most impoundment failures appear to be of this type without a discernible sudden onset. Leaks would be expected to permeate to ground water, but they could also permeate the dike to surface water. Leaks generally constitute serious, but not emergency, instant-response situations.

The risk associated with an impoundment leak, or non-sudden release, involves the potential for long-term exposure to low concentrations of hazardous substances in drinking water. Additionally, a non-sudden release may result in potential long-term, lower-level exposure to aquatic organisms in surface water or terrestrial biota in contact with contaminated soil.

6.3 RESPONSE PLAN IMPLEMENTATION

The primary difference in response to a spill and response to a leak lies in the amount of time, and therefore the degree of detail, available for investigating the distribution of contamination and selecting and implementing the remedial actions. In general, response to a sudden release requires quick application of containment and protective measures. Responses to a non-sudden release (a leak detected in the leak collection system or at a ground-water compliance point) are generally less urgent and allow more time to assess the contamination and select appropriate remedies.

6.3.1 Contingency Plan Implementation

When a large sudden release or spill is detected at a surface impoundment, the contingency plan is implemented by the Emergency Coordinator (designated in the plan), who has independent authority to initiate and carry out the response. Immediate response actions include controlling the source, containing the leaked liquid, and notifying the authorities. When immediate threats have been controlled, the response process proceeds with the contamination assessment; determining the necessary response objectives; screening available remedial options; selecting and implementing an appropriate remedy; and sampling to verify cleanup effectiveness.

Quick implementation of the contingency plan before contaminants are detected in the ground water could minimize the magnitude of contamination and necessary remedial action. Just as importantly, it could help reduce owner/operator liability.

A hazard classification of over 150 compounds, which provides information on the toxicity of these chemicals to human health and the environment, was published by Clements and Associates (1985). Hazardous chemicals can also be categorized

flammability/combustibility, persistence, and corrosiveness. The information from the response data sheet and the general contingency plan will enable the coordinator to quickly evaluate the emergency situation, review the available countermeasures, and assess the feasibility of each approach. The four basic steps in a contingency plan are:

1. Immediate Actions
2. Contamination Assessment
3. Selection and Implementation of Remedial Actions
4. Cleanup Verification

Each of these steps is discussed in the following sections.

6.3.1.1 Immediate Actions --

In the event of a sudden release, initial precautionary emergency measures must be implemented to minimize the risk to workers and the general public, and to prevent additional fires, explosions, or uncontrolled releases. Basic steps to reduce the potential exposure are as follows:

- notify on-site facility personnel
- control the source of hazardous release
- mobilize emergency response teams and equipment
- isolate the sudden release area
- eliminate ignition sources
- restrict water use
- prevent commingling of reactive wastes
- control fires

The Emergency Coordinator must also initiate efforts to contain the released waste. Temporary berms may be constructed. The Emergency Coordinator has the authority to stop process operations, if necessary. If facility operations are halted, monitoring should commence in order to detect leaks, pressure buildup, gas generation, or ruptures in valves, pipes, or other components of the surface impoundment.

The local police, fire departments, and hospitals must be notified of the release, and advised on the magnitude of potential health hazards and the potential need for evacuation of local areas. The Emergency Coordinator must notify either the government official designated as on-scene coordinator for that geographic area or the National Response Center. These response actions contained in 40 CFR 264.56 are consistent with RCRA guidelines for emergency procedures at hazardous waste facilities. Prompt actions during the initial phase of emergency response can minimize potential hazards to workers and the general public and reduce the overall cost of containment and clean-up operations.

6.3.1.2 Contamination Assessment --

The purpose of the contamination assessment is to determine the relative severity of the release and the potential safety hazard to workers and the public. This is done by evaluating the fate and transport of the contaminants, identifying the exposure pathways, and assessing the risks posed to public health and the environment. Additionally, an assessment conducted immediately after a sudden release from a surface impoundment may allow reconstruction of the events that caused the release, and possibly prevention of future releases. The assessment also provides information needed for screening and selecting remedial actions, and defines resources available for countermeasure activities (Melvold et al, 1984). The contamination assessment should result in defining the response objectives for remediation. Factors to consider in the contamination assessment follow:

- surface impoundment(s) involved;
- human exposures and/or injuries;
- potential for fire, explosion, or continued release;
- name and class of substance(s) released;
- physical and chemical characteristics of the released substance;
- approximate volume and concentration of released substance;
- media affected by release;
- permeability of affected soils;
- anticipated direction and speed of migration;
- proximity to natural barriers;
- local terrain/topography;
- proximity to environmentally sensitive areas and likelihood of impact; and
- weather conditions (i.e., wind speed and direction, air/ground/water temperature, and precipitation).

Some of the innovative technologies that may be used in assessing site contamination are listed in Table 12.

TABLE 12. INNOVATIVE INVESTIGATION TECHNOLOGIES TO ASSESS SITE CONTAMINATION.

Technology/Instrument	Information Provided
Soil Vapor Detector/Analyzer (Nadeau et al, 1985)	Migration of volatile organic compound (VOC) plume in soil or ground water.
Aerial Photographs (Finkbeiner & O'Toole, 1985)	Documentation of site conditions, assessment of potential hazards, assessment of off-site impacts, progress of clean-up operations, and evaluation of post-clean-up conditions.
Backscatter Adsorption Gas Imaging (McRae, 1984)	Detection and tracking of VOCs.
Acoustic Mapping (Meyer et al, 1984)	Delineation of the location and thickness of contaminant layers in ground-water aquifers or surface water sediments.
Ground-Penetrating Radar (Stanfield & McMillan, 1985)	Location of subsurface obstacles, contamination, faults, and fracture zones in clay liners.

6.3.1.3 Selection and Implementation of Remedial Actions --

The Emergency Coordinator will use information from the contamination assessment and knowledge of facility operations to evaluate the available remedial response alternatives. This evaluation should be based on performance, practicality, and effectiveness of the response alternatives (Melvold et al, 1984). Availability of the required resources, speed of application, and effectiveness of the response methodology in different weather and topographic conditions are also considered.

Several remedial action technologies are available for use in the event of a sudden release from a surface impoundment. Available technologies can be divided into three categories: (1) removal and disposal; (2) in-place treatment; and (3) containment. For preparation of the contingency plan, resource documents describing remedial action technologies should be reviewed. The contingency plan should contain a thorough

description of each response strategy or alternative in order to screen and select the appropriate response measures. Information on each remedial alternative should include, at a minimum, the following (Unterberg et al, 1984):

- technical description;
- applicability for field use;
- mitigation of human and environmental risks;
- environmental, demographic, and legal constraints;
- requirements for, and availability of, adequate power supply, manpower, special equipment, and supplies; and
- cost.

Several important references describe available response strategies for hazardous substance releases (USEPA, 1985k; 1983d; 1984j; and 1986e).

6.3.1.4 Cleanup Verification --

Once a cost-effective remedial action alternative is selected and implemented, the Emergency Coordinator should begin evaluating the effectiveness of site cleanup efforts. Factors that may affect the performance of response efforts include weather, equipment malfunctions, detection of additional hazards, and changing response objectives. The remedial action program should continue until the following criteria have been met, documented, and verified:

- risk to human health and the environment posed by the release of hazardous substances has been eliminated or reduced to an acceptable level;
- potential for recurring hazards (e.g., fire, explosion, and chemical release) has been eliminated; and
- response equipment and facilities have been decontaminated.

Environmental sampling should be conducted to determine if the released contaminants have been successfully treated or removed. Although the purposes differ, the methods for verification sampling of environmental media for facility closure are similar to those for response action; they are discussed in Section 7.2.4. Decontamination techniques for emergency response equipment are presented by Meade and Ellis (1985).

6.3.2 Implementation of Response Action Plan

When a leak through the top liner of a surface impoundment is detected, its severity should be assessed. If it exceeds the "rapid and extremely large leakage rate," the owner/operator should implement the response action plan. A smaller leak, but exceeding the "action leakage rate," also calls for implementation of the response action plan, but the response will be of less immediacy. The response action plan should have foreseen, and included in its range of potential events, the type of leak and appropriate responses. Any leak greater than the "action leakage rate" in a double-lined impoundment requires a response and written notification to the USEPA Regional Administrator.

One advantage of a double liner system is that there is likely to be more time available to respond to a leak than to one from a single-liner system, because the former allows for early detection and collection of leaks without contaminant loss to the environment.

If the leak is through both liners, or through a single liner as exists in some, especially older, impoundments, the response may require quicker reaction, with fewer options available. In this case, a response action plan and a ground-water corrective action program may overlap, because the leaked contaminants may have migrated to the ground water before detection.

If the leakage is greater than the "action leakage rate" but less than the "rapid and extremely large leakage" rate, the leak collection and removal system should remain effective, allowing time to choose among the corrective options available. One of a variety of responses may be appropriate. At one extreme the response may be simply a continuation of normal operations with a greater alertness to contamination release potential. At the other extreme, impoundment closure may be implemented. If the response action plan has been prepared and approved, it should contain the range of options available. It should also indicate the preferable response option for the type of leak that has occurred. If the continuation of normal operations is chosen, increased monitoring is likely to be undertaken. Even though a leak above the action leakage rate may be relatively easily handled by an early decision to continue operations, perhaps with increased monitoring, at some point leak correction will probably be undertaken as part of the response plan. The correction may be to repair the leak, change operations to reduce leakage, or terminate receipt of waste. The choice may be dependent on the rate of leakage. The choice of response must be approved by the Regional Administrator.

The first reponse may be similar for a leak greater than the "rapid and extremely large leakage" rate. Because it is a leak of much greater severity, the response must be more immediate and decisive. By definition, the leak collection and removal system alone cannot handle a rapid and extremely large leak, although its operation should continue. The proposed regulations suggest three options: (1) limiting or terminating waste receipts; (2) expeditious repair; or (3) operational changes to reduce leakage to less than rapid and extremely large. At the same time, mechanisms must be implemented to prevent leakage out of the unit. In all cases, leaked liquids must continue to be collected and removed.

When liquids are found in the leak collection system between two liners of a double-liner system, several possible courses of action are available, depending on the potential site-specific impact. In contrast, when leakage occurs in a conventional single-liner impoundment, the only appropriate response is to identify and eliminate the source of leakage, and clean up the contamination. It is apparent that by increasing the level of protection afforded by the surface impoundment components, the potential for contamination of the environment decreases, the number of possible remedial response alternatives increases, and the flexibility of selecting and implementing the response actions increases.

Finding the location of a leak in the top liner is likely to be advisable if liner repair is contemplated. When found, and it is a relatively small, discrete leak, the liquid may be drawn down to the leak location, and the damage patched. This may prove to be difficult if the liner has been exposed to waste for some time and waste absorption has occurred.

If it is a large leak, or one caused by general deterioration of the liner, it may be decided to cover the old liner with a new one. In most cases, this may require emptying the impoundment. In some, it may be possible to emplace a new liner without drawing down the waste liquid (Cooper and Schultz, 1983; Shultz et al, 1985). The emplacement would involve pulling an assembled liner across the impoundment beneath the liquid. An untried method might be to pull an assembled liner across the impoundment's surface and then sink it to the bottom.

If both liners of a double liner are leaking sufficiently to demand action, repair of the system may not be practical. The bottom liner will likely not be accessible without removal of the top liner and at least part of the leak detection and collection layer. It may be most cost-effective to close the impoundment.

USEPA conducted a nationwide study (Cochran et al, 1983) of the remedial actions being used at uncontrolled hazardous waste sites. Remedial actions at surface impoundments are also

discussed in other USEPA documents (USEPA, 1985k and 1983d). Modeling of a remedial technology using site-specific data may be used to determine the applicability of a remedial strategy for a particular site. General guidance in selection of models for evaluating remedial actions is provided by USEPA (1985g).

6.3.2.1 Leak Correction Verification --

The owner or operator of the surface impoundment must submit a report (as proposed in 264.222) on the effectiveness of the leak response action to the Regional Administrator within 60 days after the action has been taken. Verification of the effectiveness, if the impoundment has not been closed, requires the leak collection system to be operating under pre-leak conditions, that contaminants are not entering the collection system above the action response level, that contaminants are not being released to the soil and ground water, and that the liner system has been returned to USEPA-acceptable design conditions. One of the leak-detection methodologies described in Section 3.5 may be used to confirm that a leak no longer exists.

If the site has been closed, ground-water sampling must verify that the ground water does not contain hazardous constituents exceeding health-based standards.

6.3.3 Implementation of Corrective Action Program

A corrective action program is generally implemented after a release of contaminants to ground water. The program is directed at the cleanup, by removal or treatment, of the contaminated ground water.

In general, a specific sequence of events will have occurred that triggers a corrective action program. First, the presence of a monitored hazardous constituent will have been detected at the compliance monitoring point. When that occurs, a compliance monitoring program must be implemented. If the constituent(s) exceed the ground-water protection standard for the constituent, or a concentration limit established by the Regional Administrator, a corrective action program must be implemented. The owner or operator may be relieved of program implementation only if he can show that the source of the hazardous constituent(s) is not from his impoundment.

Several reporting requirements are involved in detection and compliance monitoring and during and after completion of a corrective action program. All reports are required in writing to the Regional Administrator. Compliance monitoring and corrective action programs, once implemented, must be completed and the contamination cleaned up, regardless of the activity or

inactivity stage of the impoundment. Cleanup must include ground water both on and off the site, to the extent necessary to bring the ground water to within the limits of the established concentration limits or the ground-water standards.

Cleanup of ground water may be a long and difficult task. The available options include: (1) extraction (may include flushing) and removal of the contaminated water from the site, (2) pumping, treating, and returning the contaminated water to the aquifer, (3) treating the aquifer in place (may include flushing after treatment). Treatment alternatives include immobilization and degradation techniques. Many of the techniques have been described by USEPA (1984m and 1985k).

Ground-water cleanup may be facilitated by the construction of barrier walls. Barrier walls may confine the contaminated zone to a more manageable area, prevent the spread of contaminated water, and reduce the need to treat uncontaminated water that would otherwise enter the zone. Slurry walls are commonly used for this purpose (USEPA, 1984n).

6.3.3.1 Ground-water Cleanup Verification --

A corrective action program must include ground-water monitoring throughout and after completion of the program. Monitoring may be a continuation of the compliance monitoring program initiated before the corrective action program. The corrective action program may be terminated when the hazardous constituent concentration has receded to the compliance concentration limit. When the corrective action is taken after the impoundment's active life, the action may not be terminated until the owner/operator can demonstrate that the ground-water protection standard has not been exceeded for three years.

The owner-operator must report periodically on the progress of the the corrective action. In addition, he must attest to the outcome of the program upon its completion. The reports are made to the Regional Administrator. During the action, if it is not showing success, the Regional Administrator may require a change in the program including a change in the permit conditions.

6.4 PERSONAL SAFETY DURING REMEDIAL OPERATIONS

The contingency plan for remedial actions at surface impoundment sites should identify health hazards and potential risks and give appropriate methods to provide personal safety. In light of the possible health hazards that may occur during a remedial investigation and subsequent cleanup operation, it is important that the contingency plan provide the means for assuring worker protection. The required level of worker

protection during remedial actions will depend on site and waste characteristics which affect the fate and transport of contaminants, toxicology of the waste, environmental features of the site, and physical hazards. Additional information on worker health and safety hazards has been provided by NIOSH (1985). There are four basic parts to worker protection (Lippitt et al, 1984):

- site management procedures to control access and minimize exposure;
- engineering safeguards to contain the waste and isolate workers from hazardous areas;
- personal protective clothing and equipment to minimize direct contact and inhalation; and
- decontamination procedures and practices to remove and control the spread of contamination.

Each of these facets should be discussed fully in the contingency plan, and all of the necessary equipment and personal safety gear should be available and accessible at all times at the site.

CHAPTER 7

CLOSURE AND POST-CLOSURE CARE

Owners/operators are required by 40 CFR 264.111 to close hazardous waste surface impoundments in a manner that minimizes the need for further maintenance and prevents threats to human health and the environment. Closed impoundments must control, minimize, or eliminate the post-closure escape of hazardous waste, hazardous constituents, contaminated runoff, and waste decomposition products to ground water, surface water, and the atmosphere. Closure regulations have not been promulgated or proposed by USEPA for non-hazardous waste surface impoundments.

Two basic closure options are available for a hazardous waste surface impoundment under RCRA regulations: clean closure (complete removal), and in-place closure (40 CFR 264.228[a][1] & [2]). Figure 46 presents a flowchart for each of the two options.

Clean closure of a hazardous waste surface impoundment includes (1) removal or decontamination of all waste residues and contaminated liner system components and subsoils; (2) sampling to verify decontamination; and (3) backfilling. USEPA and RCRA regulations tend to encourage clean closure, because the site is essentially restored to its pre-impoundment condition, and further attention is not required. However, the removed hazardous materials must still be treated and disposed of at some location, which may be a landfill.

In-place closure of a hazardous waste surface impoundment is similar to closure of a landfill or other disposal unit. It involves the solidification and/or treatment of all contaminated media in the surface impoundment (i.e., liquids, sediments, and subsoils) by chemical, physical, and/or biological techniques. No free liquid may remain in the unit after closure. Hazardous wastes must be treated to minimize their toxicity. The treated wastes left in place must have a final cover structure that meets the minimum technology requirements for a hazardous waste landfill cover (USEPA, 1989a).

The primary goal of in-place closure is stabilization of all residuals, providing the material with a bearing capacity to support a final cover. While treatment to reduce the impounded contaminants may be required, this approach does not necessarily

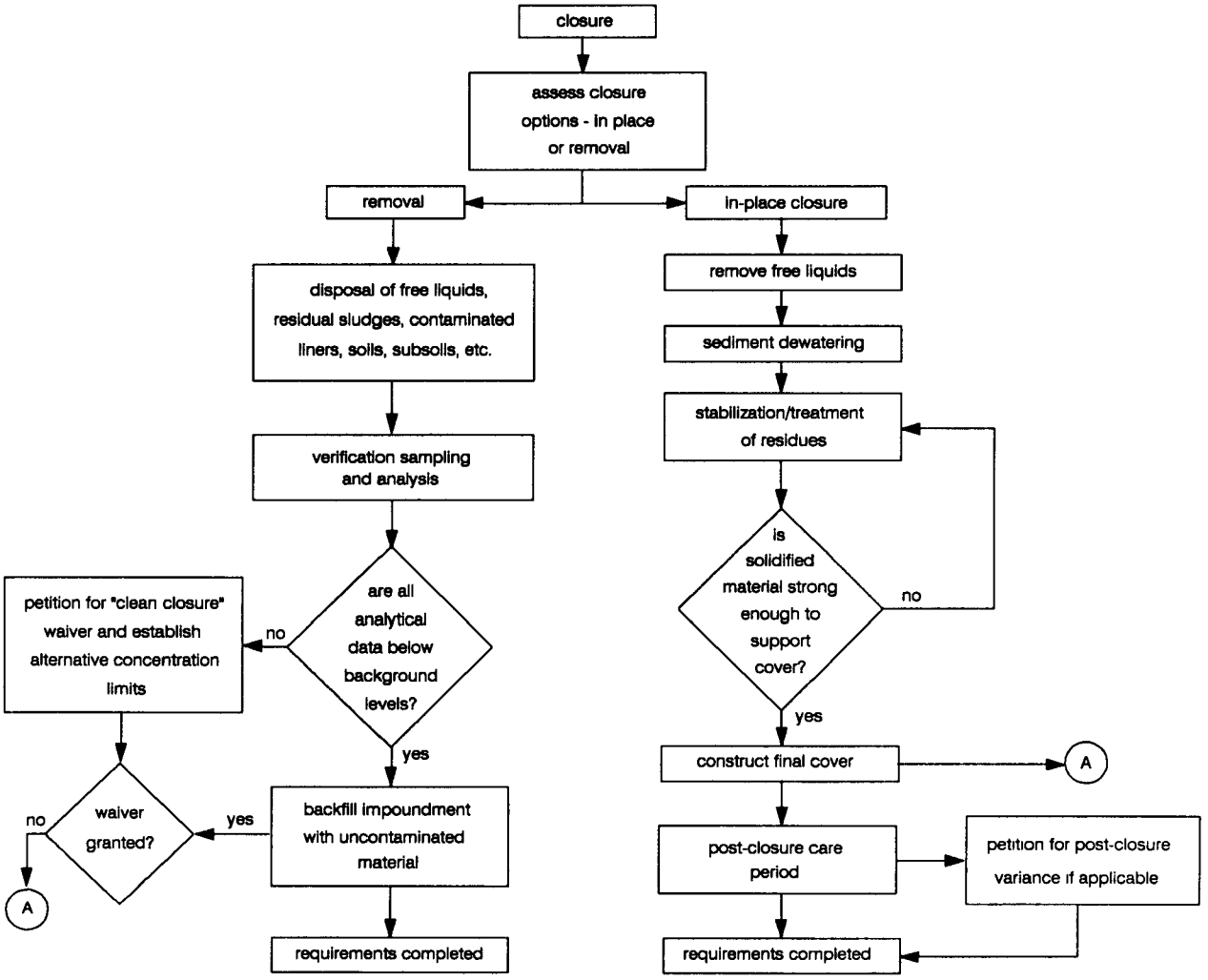

Figure 46. Flow chart of closure options and requirements.

eliminate all hazardous constituents. Thus, a 30-year post-closure care period is required. Post-closure activities are the same as for a closed hazardous waste landfill. They include long-term operation and maintenance of the final cover, leachate collection system operation and maintenance, and ground-water monitoring.

If the impoundment is older and does not have a non-leaking liner, all contaminated materials (waste, liner, soils, etc.) may be removed and managed as hazardous waste. An alternative is to eliminate free liquids, stabilize the remaining waste, provide an effective cover, and provide monitoring and maintenance throughout the post-closure care period.

A critical aspect of in-place closure is constructing the final cover system with an hydraulic conductivity at least as low as that of the liner system. If the liner is ineffective, USEPA may still require a cover that meets the performance objectives of a "minimum technology" cover. The final cover acts to minimize infiltration and leachate formation by diverting surface water with slopes, drainage layers, and low-permeability barriers (USEPA, 1986a). USEPA (1989a) has published minimum technology guidance for hazardous waste landfill covers. The guidance recommends a top soil layer with a vegetated or armored surface, a drainage layer, and a two-component (geomembrane and compacted soil) barrier layer. Other layers, such as geotextiles, may be required for specific purposes.

7.1 ASSESSMENT OF CLOSURE OPTIONS

The anticipated use of the surface impoundment (i.e., treatment, storage, or disposal) influences the design and, eventually, the type of closure option implemented. Surface impoundments that are used to store and treat wastes usually require removal and disposal elsewhere of all contaminated material following the active life of the facility. Disposal impoundments, on the other hand, are usually (but not always) closed in place and require a post-closure care period. Table 13 presents advantages and disadvantages of the two closure options.

Several factors should be evaluated in choosing the closure option for a particular site:

- waste characteristics, including toxicity, mobility, leachability, reactivity, biodegradability, and degradation by-products;
- site location features, including topography, geology, climate, geohydrology, and proximity of highly populous or environmentally sensitive areas;

TABLE 13. ADVANTAGES AND DISADVANTAGES OF CLOSURE OPTIONS.

Advantages	Disadvantages
Removal	
• No post-closure monitoring and care period • Simpler in concept, requires less administrative time • May be suited for environmentally sensitive areas • May be best option for highly toxic materials • Land may be used for other purposes after clean closing	• Current regulations require removal of all contaminated liner and subsoils containing levels of waste constituents above background conditions. • Transportation costs often high • Risks associated with transportation • Generator keeps long-term liability for waste removed to other management facilities
Containment	
Stabilization/Solidification	
• Stabilization technology available for most wastes • Work completed on site, generator keeps control • May offer generators a cost-effective option, especially those not near a commercial RCRA facility • May petition for shortened post-closure period	• 30-yr post-closure monitoring • Liability associated with potential threat to environment as a result of leaking landfill • Land use is limited • State administration fees for hazardous waste programs • Financial assurance required for post-closure period
Treatment	
• Work completed on site, generator keeps control • May offer generators a cost-effective option, especially those not near a commercial waste-disposal facility. • May file delisting petition • May petition for shortened post-closure period	• 30-yr post-closure monitoring if no variance is received • Land use limited if monitoring variance not received • Financial assurance required for post-closure period • State fee for administration of hazardous waste program

- cost;
- intended future site use; and
- environmental risk.

7.1.1 Waste Characteristics

The removal option is advantageous for surface impoundments with subsoils or residual materials that cannot be treated sufficiently, or within reasonable cost, to remove environmental threats. For example, a surface impoundment containing leachable or volatile hazardous wastes or liquids that cannot be solidified or stabilized to yield consolidated wastes of sufficient strength to support the final cover might be better closed by materials removal (USEPA, 1982a). Inorganic wastes easily treated to a low-mobility state might be better suited to in-place closure.

7.1.2 Site Location Features

In-place closure of surface impoundments near environmentally sensitive areas (e.g., wetlands, fault zones, flood-prone areas, areas with shallow ground water, or areas with highly permeable subsoils) may pose a significant environmental risk. Similarly, in-place closure of surface impoundments near major population centers may increase the future risk to human health. In these cases, removal and treatment or remote disposal are preferred. On the other hand, some hazardous wastes (e.g., containing a significant radiation component) may pose less of a threat if left in place and secured there.

7.1.3 Cost

Closure of a surface impoundment involves immediate closure expenses, plus (if it is in-place closure) longer-term costs for maintenance and monitoring. Closure costs depend on factors such as availability and complexity of in-place treatment technologies; labor and equipment costs; and proximity to an alternative off-site hazardous waste treatment facility. If both removal and in-place closure are viable alternatives, the closure decision may be based on a comparison of cost estimates.

Complete removal or clean closure eliminates long-term liability and the need for post-closure maintenance and monitoring costs. However, if soils have been contaminated, the necessity for removing them may increase the closure costs dramatically. In-place closure requires a 30-year post-closure monitoring and care period and associated costs. A post-closure financial assurance bond is required at the beginning of the

post-closure care period (40 CFR 264.140). In addition, further costs will result if remedial actions are required due to improper in-place closure operations (e.g., faulty design or construction of the cover system), which lead to migration of hazardous leachate from the impoundment.

7.1.4 Intended Future Site Use

The potential future use of the site should be considered during the assessment of closure options. Clean closure is the better choice if unlimited use is desired. If in-place closure is an option being considered, the planned site use should be such that it poses no problems with maintenance of the final cover or functioning of monitoring systems. Compatibility of impoundment and cover system components with various site uses is discussed in Section 7.4.3.

7.1.5 Environmental Risk

Both short-term and long-term environmental risks are associated with surface impoundment closure. Short-term risks occur during closure and involve handling and transporting wastes, worker safety, and mobilizing hazardous constituents by disturbing the wastes. These risks are potentially greater for closure through removal than for in-place closure.

Long-term risks are generally associated with in-place closure, and include the potential for slow release of hazardous constituents into ground water or nearby surface water through cover or liner deterioration. Long-term risks may also be associated with off-site disposal which may be involved during clean closure. Because of the long-term costs and liabilities associated with surface impoundment closure, it is important to evaluate the potential environmental risk which may result from cover failure during or after in-place or clean closure.

7.2 CLEAN CLOSURE (CLOSURE BY REMOVAL)

Clean closure of a surface impoundment requires removal or decontamination of all wastes, contaminated liner system components, structures, subsoils, and equipment (USEPA, 1984a). As stated earlier, this option requires the removal of all hazardous constituents to background levels. The owner/operator of a RCRA-permitted surface impoundment may find that it is not possible to comply with the clean closure plan because waste constituents have migrated to great depths and removal to background levels is not feasible. In that case, current federal policy requires that the surface impoundment comply with in-place closure requirements (USEPA, 1984e). For clean closure of

interim status facilities, it may not be necessary to remove all subsoils containing hazardous constituents at concentrations above background levels, if the levels can be shown to be nonhazardous via 40 CFR Part 261.3(d). A plan describing the sampling and analysis procedures to verify decontamination of the site should be submitted as part of the closure plan.

7.2.1 Free Liquids

Regulations (40 CFR 264.314) disallow the disposal of free liquids in a hazardous waste landfill. This has special significance for surface impoundments since landfilling is ordinarily the ultimate disposal method, regardless of whether clean closure or on-site closure is chosen.

Several options may be considered in dealing with the impounded hazardous liquid during clean closure. The options include (1) natural evaporation; (2) forced evaporation; (3) other on-site treatment (e.g., chemical neutralization); (4) solidification or stabilization; (5) off-site treatment; and (6) recovery and process re-use. Some consideration should have been given to treatment methodology in the impoundment planning and design process, in anticipation of closure.

Criteria used to select a treatment option include technical feasibility, reliability, effectiveness, regulatory acceptance, and cost. Methods used to evaluate these options include literature review of treatment technologies and vendor interviews, bench-scale studies, pilot tests, cost estimation, and consultation with regulatory agencies (Stevens, 1986).

On-site liquid treatment can use technologies developed by the wastewater treatment industry in recent years, including mobile or temporary treatment units (USEPA, 1982f). In many cases, the treated liquids are released either to a publicly owned treatment works (POTW) or directly to surface waters if they meet effluent requirements of federal, state, and local agencies (Crawley et al, 1984; Hale et al, 1983).

Disposing of liquids through natural evaporation is perhaps the least expensive method, but requires a suitable climate and can be subject to air emission regulations. However, the impoundment often will have been operating as an evaporation impoundment through its active life. With the cessation of waste liquid input, it would be allowed to dry up.

Solidification and stabilization by the addition of a solidification agent will ordinarily be one of the less expensive alternatives. After solidification, the waste material can be removed and transported to a permitted landfill.

Other on-site and off-site treatment can be very costly, with off-site usually being the most expensive. Much of the cost can be allotted to transport. Transport of hazardous liquid wastes is controlled by the U.S. Department of Transportation, which requires the use of proper containment vessels, manifests, placards, and other handling procedures (40 CFR Part 172).

Alternatives to treatment and disposal of free liquids (e.g., reuse or waste reduction) are often more cost-effective; however, these technologies must be implemented during or prior to the facility's active life rather than during closure.

7.2.2 Residual Sludges

Residual sludges in a hazardous waste surface impoundment will always be considered hazardous materials and require removal or treatment. The primary removal option for residual solids is transport to an off-site, RCRA-approved disposal facility (e.g., an incinerator or landfill). To reduce transportation and disposal costs, the sludges may be dewatered or stabilized before off-site transport, provided the separated liquids can be treated and properly disposed. Alternatively, residual solids can be transported and stabilized at the receiving facility. Methods to remove surface impoundment sludges for stabilization or dewatering are discussed in Section 5.1.2.4. Stabilization techniques are discussed in Section 7.3.3.1.

7.2.3 Subsoils, Liners, and Other Contaminated Materials

Contaminated liner system components and subsoils must also be treated or removed and transported to a permitted hazardous waste disposal facility. This is the final step in waste removal from a surface impoundment. Documentation showing that all contaminated material has been removed is essential.

All equipment and support structures that are not removed must be decontaminated (USEPA, 1986f; Meade and Ellis, 1986). These structures include unloading areas, outfalls, leak collection sumps, pumps, level detection stations, and other structures that have contacted the waste.

7.2.4 Verification Sampling

The owner/operator should provide analytical data to verify that closure was completed satisfactorily and that no significant environmental hazard remains. Therefore, a plan to sample and analyze the residual materials, subsoils, adjacent areas, and equipment should be developed and submitted as part of the closure plan. This plan should include sampling procedures,

location and depth of soil samples, indicator parameters, analytical procedures, and sampling methods to document the decontamination of equipment and site soils.

Owners/operators who plan to close an impoundment using the removal option should submit procedures in the sample plan to establish chemical constituent levels for soils and ground water at or below which no significant threat is anticipated. Normally, these are background levels. For new surface impoundments, background samples should be collected before construction. For existing surface impoundments, background values for chemical constituents can be established by collecting samples in an adjacent area with soil conditions similar to those at the impoundment site before construction. Efforts should also be made to establish constituent background levels for borrow materials used to construct liners, foundations, and dikes. Establishing constituent background values is important because the clean-closure option may use these values as standards to verify adequate treatment or removal.

Soil and ground-water background sample data should be statistically evaluated to assess the data's spatial variability. The closure plan should contain a method for comparing the background data set with the post-closure data set. Information on this subject can be found in publications by Keith et al (1983), Mausbach et al (1980), and Beckett and Webster (1982).

In most cases, verifying clean closure is limited to collecting and analyzing samples from the liner materials and immediately adjacent subsoils. For most surface impoundments, ground-water monitoring wells have already been installed and are being monitored routinely at the time of closure. Ground water should be sampled and analyzed during verification sampling.

7.2.4.1 Sampling Schemes --

Verification sampling schemes applicable to closed surface impoundments include simple random sampling, stratified random sampling, systematic sampling, and judgmental sampling (USEPA, 1983b). Each scheme requires developing protocols for sampling, sample handling and analyses, and adherence to a QA/QC program. Each sampling scheme must also include provisions for collecting soil samples at a number of specified depths to develop a constituent concentration profile with depth.

The systematic sampling approach uses grids or transects to provide sample locations. Because surface impoundments typically are regularly shaped structures, this procedure is an effective sampling method and is recommended for use in the process of delisting hazardous wastes at surface impoundments (USEPA, 1985h). The procedure requires that the entire facility be

divided into unit areas of equal size which do not exceed a specified surface area (e.g., approximately 10,000 ft^2 [930 m^2]). Each unit area is further divided using a grid, representing potential sampling locations, which are selected using random numbers. The number of samples collected from each unit quadrant depends on the degree of spatial variability within the facility. The samples collected from within a unit area are composited to form one homogeneous sample for analyses. During the planning stage, it is recommended that a reference be consulted (e.g., USEPA, 1983f and USEPA, 1984k).

7.2.4.2 Indicator Parameters --

Ground-water and soil samples suspected of being contaminated should be analyzed for certain basic parameters indicative of contamination. Analysis for indicator parameters screens samples and identifies those samples requiring more detailed testing to determine the type and concentration of specific contaminants. Choice of indicator parameters depends on the wastes stored, but commonly includes the following:

- total organic carbon (TOC): indicator of organic compounds;
- electrical conductivity: indicator of soluble ions;
- pH: indicator of acidic or basic conditions;
- oil and grease: indicator of petroleum-based products;
- total organic halogens (TOX): indicator of halogenated organic compounds; and
- toxicity characteristic leaching procedure (TCLP): indicator of leachability of hazardous organic and inorganic compounds.

Soils and ground water suspected of metals contamination should be analyzed for total quantities of the specific metals.

7.2.4.3 Quality Assurance/Quality Control --

The QA/QC program is implemented to minimize or eliminate error associated with the sampling and analytical programs. Each item outlined in the sampling protocol must be defined clearly, especially those concerning specific sampling locations. Sampling protocol should include the following points:

- methods used to determine the number of samples to be collected and the sampling point locations;

- depth(s) for sample collection;
- type(s) of equipment for sample collection;
- methods for decontaminating sampling equipment;
- compositing procedures; and
- a list of all analytical parameters, preservation methods, and handling and shipping procedures.

Sampling error may be introduced into the sampling procedure regardless of the precautions taken. Thus, auditing the sampling procedures may be worthwhile to determine the magnitude of sampling error; for example, replicate samples can be analyzed to monitor sampling procedures. Detailed information on preparing a QA/QC program has been presented by USEPA (1980c).

The QA/QC program includes laboratory procedures for chemistry analyses, analytical verification techniques, data handling and analysis, and personnel responsibilities.

7.2.5 Regulatory Variance

In some if not most cases, removing all subsoil materials containing hazardous constituents above background levels is not feasible. This situation is likely to occur in the case of an existing surface impoundment which either does not have a liner or has a liner that has been ineffective. In such a situation, closure leaving the remaining materials in place is necessary to comply with federal regulations. In some instances, the materials remaining after free liquids, sludges, contaminated liners, and subsoils are removed may have hazardous constituent concentrations higher than background values, but below levels that present a hazard to the environment or human health.

Current RCRA guidance on facility closure (USEPA, 1982a) does not provide specific guidance on closure options for surface impoundments with hazardous waste constituents present in subsoils or liners at less than hazardous levels. USEPA proposed on March 19, 1987, in 40 CFR 265.310(c), conditions for allowing "alternate closure requirements." If the conditions are met, the requirement could be waived for removing all materials having contamination above background levels. A waiver would require that the owner/operator show that the closure performance standard in 40 CFR 265.111 would still be met. It may require that "alternate concentration limits" (ACL) be established for the waste constituents in the soils at the site.

Selecting ACLs for inorganic compounds may follow guidelines for determining whether materials are considered hazardous, such

as EP Toxicity testing (40 CFR 261.24) or past experience at Superfund remediation (CERCLA) sites. Selecting acceptable values for organic compounds may be extremely difficult due to the lack of information concerning the persistence or long-term environmental hazard presented by these chemicals. In situations where some level of organic compounds is proposed to be left in place, it is likely that the responsibility lies with the owner/operator to demonstrate acceptable limits.

7.2.6 Backfilling

The area can be backfilled after verification that the closure area has been decontaminated. No specific guidelines are available for backfilling materials; however, a few considerations are advisable. Soil used for backfilling should not be contaminated, and the selected soils should be analyzed if contamination is possible. Soils placed into the impoundment area should be compacted to a dry bulk density at least as high as the surrounding soils to prevent subsidence and differential settlement. Additionally, the backfilled soils should be compatible with intended future site use. Soil characterization and engineering tests on the soils may be required before use.

The area should be contour-graded to enhance and control site runoff and reduce percolation and erosion. Surface grading and compacting should result in a surface sufficiently sloped to prevent ponding. Rishel et al (1984) present cost estimates for contour-grading at surface impoundments.

The surface soil (12 inches [30 cm] or more) should be of sufficient nutritive capacity to support vegetation. The area should then be seeded with a suitable grass to prevent erosion.

7.3 IN-PLACE CLOSURE

In-place closure means closing the surface impoundment as a landfill with a subsequent 30-year post-closure care period. Facilities with intact liners at closure can petition the USEPA Regional Administrator to reduce the post-closure period. The in-place closure option consists of four basic phases:

- solidification or removal, treatment, and disposal of free liquids;
- treatment and stabilization of residual sludges and contaminated soils;
- decontamination of equipment; and
- construction of a final cover;

USEPA recommends that permit applicants address the following items in their surface impoundment closure plans (USEPA, 1984e):

- detailed information on how free liquids will be removed or solidified;
- detailed plans describing how the wastes will be stabilized;
- determination of the unconfined compressive strength and consolidation characteristics of the stabilized waste; and
- analysis results showing that the stabilized wastes will provide sufficient, permanent support for the cover and other expected loadings.

7.3.1 Removal of Free Liquids

Treatment and removal of free liquids for in-place closure is similar to that for clean closure (discussed in Section 7.2.1). An alternative to removal is solidifying the liquids in place, and eliminating the need for off-site discharge or removal. Care must be taken during this activity to prevent damage to the impoundment liner. Solidification is discussed in Section 7.3.3.1.

7.3.2 Sludge Dewatering

Remaining sediments may require temporary removal from the impoundment and dewatering to meet consistency requirements and to ensure adequate handling characteristics for landfilling. In some situations, portable processing systems (e.g., clarifiers, centrifuges, thickeners, or belt-filter presses) may be installed at the closure site to accomplish active dewatering.

Solidification agents may also be added instead of or in addition to dewatering. In arid or semi-arid climates, sediments can be dewatered using passive means (evaporation or free drainage). This technique usually involves constructing a drying area within the impoundment or drying beds outside the berms. Collected water requires proper treatment and disposal (see Section 7.2.1). Once sufficient liquids are removed so that the sediments have a semi-solid consistency (i.e., will not flow), the sediments can be mechanically transported (by clamshell, auger, dragline, or dozer) and spread in the surface impoundment.

7.3.3 Waste Residuals

Surface impoundments closed in-place require stabilization or treatment of the residual solids. The residual solids may be a combination of the impoundment's accumulated bottom sediment and the residual from treating the liquid portion. Stabilization of these solids increases the bearing capacity to a degree sufficient to support the final cover. Treating certain waste residuals can render them nonhazardous, thereby increasing the flexibility of the post-closure care program.

7.3.3.1 Stabilization --

Sludges and other solids in surface impoundments are likely to possess poor physical and structural properties; therefore, stabilizing them to a semi-solid consistency is usually required to provide adequate containment of waste constituents. Stabilizing waste residuals improves their physical properties by two primary means: (1) increasing the density, which reduces the compressibility of waste residuals and the resultant potential for settlement of the final cover; and (2) decreasing the permeability of the waste residuals and thus the mobility of pollutants in the residuals (Anderson and Jones, 1982).

Stabilization techniques have become important remedial operations, largely due to CERCLA (Superfund) remediation activities. The goal in applying these techniques is to produce a solid, chemically non-reactive material. Several methods exist for mixing the wastes with stabilizing agents, including in-drum mixing, in-situ mixing, mobile mixing plants, and area mixing. These methods and techniques have been outlined by USEPA (1986g).

Most stabilization techniques are proprietary processes that involve adding absorbents and solidifying agents to the residual. These processes generally involve one of the following:

- sorption
- pozzolan formation
- encapsulation

Detailed discussions of these processes are contained in reports by USEPA (1982b, 1982f, 1986g, and 1989e), Spooner (1985), and Anderson and Jones (1982).

Sorption involves adding a dry, solid substance to a liquid or semiliquid waste to take up free liquid and improve waste-handling characteristics. Common sorbents include fly ash, lime kiln dust, cement kiln dust, zeolites, and soil. This method can be implemented using readily available equipment at relatively low cost. The disadvantages include increased material for disposal and relatively high leaching loss of potential

contaminants from the stabilized wastes, thus requiring a secure disposal (Spooner, 1985).

Lime/fly ash pozzolan and Portland cement pozzolan processes use solidifying agents (e.g., hydrated lime or cement) along with pozzolans to increase strength and durability. The suspended solids in a waste slurry become incorporated into the hardened concrete matrix, increasing the strength and decreasing the permeability of the mixture. However, a number of compounds or materials (e.g., oil and grease, calcium sulfate, sodium borate, and organic matter) can weaken the waste/cement bond and decrease the physical strength.

Encapsulation isolates wastes by completely surrounding them with a durable, impermeable coating. Containment of the waste is complete and assured for the life of the coating material. Thermoplastic microencapsulation involves mixing dried wastes with materials (e.g., asphalt, paraffin, polyethylene, and polypropylene) and placing the mixture in a mold. Some of these processes are adaptable to highly soluble toxic substances which are not amenable to lime or cement-based techniques. The disadvantages of this process include the cost of materials, and the need for specialized equipment, skilled labor, and energy.

A bench-scale study, in which the wastes are mixed with various stabilizing agents, is usually performed to select the appropriate stabilization technique. Standards for testing the stabilized wastes have not been developed; however, a testing scheme should be developed for each individual situation. The tests should be conducted on representative waste residual samples that have been subjected to the proposed stabilization technique. Various tests are described by USEPA (1989e).

The two most important engineering properties of stabilized wastes that must be addressed in the closure plan are unconfined compressive strength and compressibility. These engineering properties are used in engineering calculations to demonstrate that the stabilized waste has sufficient strength to support the maximum anticipated loadings that may result from overburden, cover, and equipment that will be used to close the facility (USEPA, 1984e). Further, these properties are used to estimate the magnitude of long-term settlement of the cover as a result of consolidation of the stabilized waste. Unconfined compressive strength and consolidation properties, as well as other characteristics of the stabilized waste, should be determined using procedures listed in Table 14.

Other tests may be required for specific situations (e.g., closing existing surface impoundments with inadequate liners). These tests include leaching rate, permeability, free liquid content, and biological consolidation (see Table 14).

TABLE 14. TEST PROCEDURES FOR STABILIZED WASTES.

Parameter	Reference	Comments
Unconfined Compressive Strength	ASTM D 2166	Adjust water content and density to the same as dewatered and compacted sludge.
Consolidation	ASTM D 2435	Adjust water content and density to the same as dewatered and compacted soil.
Biological Oxygen Demand	American Public Health Assoc. (1985)	Biological consolidation estimated by assuming 1 unit of organic matter will be destroyed for each 2 units of oxygen demand.
Leaching Potential	Chan et al (1978)	EPA considers this shake test to be the best currently available.
Hydraulic Conductivity tests	Means & Parcher (1963)	Laboratory K tests typically give lower values than field. This method also allows measurement of compressibility and rate of settlement.
Free Liquid Content	Spooner (1985)	

7.3.3.2 Treatment of Residues --

The primary objective of treating residues is to render them nonhazardous, thus limiting potential long-term liability and possibly the duration of the post-closure care period. In-situ treatment uses chemical, biological, or physical mechanisms to degrade, remove, or immobilize contaminants. Treating the residual sediments is similar to treating soils. Therefore, the following discussions apply to dried sludges and contaminated soils.

Contaminated materials that are treated to render them nonhazardous must be managed as hazardous wastes, unless they can be shown to be exempt (delisted) via 40 CFR 261.3(d). Wastes considered characteristically hazardous must be formally delisted via petition to the USEPA Regional Administrator (see Section 7.4.4).

Extraction (Soil-flushing) -- Extraction entails washing contaminants from the soil with a suitable solvent (e.g., water, surfactants, dilute acids or bases, or chelating agents). During elutriation, sorbed contaminants are solubilized, emulsified, or reacted chemically with the flushing solution and are mobilized. The washing solution is injected into the area of contamination, and the contaminated elutriate is pumped to the surface for removal or on-site treatment and reinjection. This technique probably has limited applicability for treating sediments in lined surface impoundments, because of the difficulty of establishing a subsurface circulation in the shallow confines of the impoundment. Care must be exercised in using dilute acids and bases to prevent the undesired result of dissolving already-fixed contaminants. This technology is derived from the mining industry, where it has been used for in-place extraction of metals from ores (USEPA, 1984b; Wagner and Kosin, 1985; Ellis et al, 1985).

Immobilization -- Immobilization techniques are designed to reduce the rate of contaminant release from the soil so that concentrations along exposure pathways are maintained within acceptable limits. The primary techniques include precipitation, sorption, ion exchange, and solidification (USEPA, 1984f).

Precipitation is primarily applicable to heavy metal contaminants. It can be accomplished by adding carbonates, sulfides, phosphates, and hydroxides. Within the correct pH range, these compounds are very insoluble. Potential additives include calcium phosphate, calcium carbonate, calcium sulfide, sodium sulfide, iron hydroxide, alum, and ferrous sulfate. The two major considerations influencing metal precipitation are pH and rate of complexing agent application. The chemistry of the potential compounds must be evaluated to prevent creating soluble compounds that will leach, and to prevent changes in the chemistry (e.g., pH) over the long term that may lead to leaching (USEPA, 1984f; Wagner and Kosin, 1985; Malone et al, 1983).

Chemical neutralization is a type of immobilization which lends itself to acidic, metal-containing wastes. Neutralization lowers corrosivity and immobilizes metals, rendering the waste nonhazardous. Calcium and magnesium hydroxides are the additives most commonly used.

Application of additives to waste sediments can often be accomplished with agricultural equipment. In some cases, it is possible to treat the sludges during the dewatering process. Where application into deeper subsoil layers is required, grouting equipment may be used to inject the additive. Grouting is a technique in which an aqueous suspension containing the additive is pressure-injected into the subsoil, where it forms a gel or solidifies in place. This procedure has been used successfully to treat acidic, metal-contaminated soils beneath surface impoundments (Crawley et al, 1984).

Sorption is potentially applicable to organic and inorganic contaminated sediments. A variety of natural and synthetic materials can be added to soils to increase their natural ability to sorb ions. Suitable materials that have potential for sorbing metals include various agricultural products and by-products (e.g., peanut hulls, straw, bark, sawdust, and wastewater sludge). The pH of the residuals should be maintained above 6.5 for maximum adsorption efficiency. Tetraethylenepentamine (tetren) has been used successfully to form metal chelates. These complexes are strongly sorbed by soil clays and are not sorbed by organic matter. Tetren must be applied to a soil relatively high in clay to be effective. The long-term stability of tetren-metal complexes against decomposition or degradation is not yet known (Wagner and Kosin, 1985; USEPA, 1984j).

Certain natural clays, zeolites, synthetic resins, and other colloids have the capacity to adsorb ions preferentially through exchange reactions or to capture certain ions through stearic hindrance in the crystal lattice. The ability of a colloid to sorb metals chemically is related to its cation exchange capacity (CEC) and surface area. Cation exchange capacity is an electrical property of colloids and is defined by the number of positively charged ions (cations) which can potentially be adsorbed by the colloid. Naturally occurring zeolites typically have the highest CEC values among natural earthen materials, followed by high organic (peat) soils, and soils high in vermiculite or smectic clay content. Zeolites behave as "molecular sieves," capturing certain ions in the crystal framework while allowing others to pass through. Increasing the clay content or CEC of a dried sludge can increase capacity to immobilize metallic cations (USEPA, 1984j).

Synthetic resins that can adsorb or chelate both cations and anions have been developed. However, resins are generally expensive and have limited availability (USEPA, 1984j; Wagner and Kosin, 1985).

Techniques used to stabilize residues can be used to render them nonhazardous if the waste constituents are adequately

immobilized. Sorption, pozzolan formation, and encapsulation processes are discussed in Section 7.3.3.1.

Biodegradation -- Biodegradation is the breakdown of organic compounds by microorganisms. Biodegradation techniques include land treatment and composting sludges (USEPA, 1983a; Overcash and Pal, 1979). Important factors to be considered in biodegradation by land treatment include (1) soil conditions (i.e., pH, redox potential, moisture content, texture, nutrient supply, and temperature); (2) presence of toxic compounds; (3) biodegradability of the contaminant; and (4) breakdown products. Certain hazardous wastes may have limited data available on degradation rates or by-products. Therefore, a laboratory or greenhouse treatment demonstration study may be required to demonstrate treatability of the waste and to determine optimum degradation conditions. If materials high in organic matter are closed in place without adequate treatment, biodegradation will occur during post-closure. This can lead to reduction of the total mass of solids, consolidation, excessive production of gases, and differential settling of the cover.

Chemical Degradation -- Chemical treatment of soils and other solids in situ should be carefully considered beforehand. It is very difficult to treat the materials homogeneously. The mass may contain zones where treatment has been very effective while containing other zones where virtually no reaction has taken place. The following discussion should be taken in light of these probabilities.

Oxidation and reduction reactions may be carried out in place to transform soil contaminants into less toxic or less mobile products. Introducing chemical oxidants (e.g., ozone and hydrogen peroxide) into the soil system will often promote oxidation of organics. These agents are applied as aqueous solutions directly onto the soil surface or injected into vadose zone subsoils or ground water. Laboratory and field treatability studies will be required to assess the reactions that occur and to develop data for design of a full-scale treatment system if results are favorable (USEPA, 1984j).

In-situ reduction may be accomplished by adding chemical reducing agents (USEPA, 1984j). This process has been shown to degrade toxic organic constituents. Organic wastes that are amenable to treatment include chlorinated organics, unsaturated aromatics and aliphatics, and other organics susceptible to reduction (USEPA, 1984j). Possible reducing agents include catalyzed metal powders of iron, zinc, or aluminum. These agents can be applied to the soil surface and mixed with contaminated soil using conventional agricultural equipment. Alternatively, a grout slurry of the metal powder can be injected into the subsurface via closely spaced wellpoints.

Certain inorganic constituents can be immobilized or transformed to less toxic compounds through reductions. For example, hexavalent chromium and selenium have been successfully treated in soils using reduction technology (USEPA, 1984j). The resulting reduced compounds are trivalent chromium, elemental selenium, and selenite (Se[IV]). These reduced compounds are less toxic and less mobile in soil systems than their oxidized analogues.

7.3.4 Final Cover System

Federal regulations require constructing a cover system over a hazardous waste disposal impoundment upon final closure. Regulatory statutes (40 CFR 264.228) require that the cover:

- provide long-term minimization of liquid migration through the closed facility;
- function with minimum maintenance;
- promote surface water drainage and minimize erosion or abrasion of the cover;
- accommodate settling and subsidence so that cover integrity is maintained; and
- have a hydraulic barrier with a permeability less than or equal to that of the lowest-permeability bottom liner or natural subsoil layer present immediately beneath the facility.

USEPA (1989a) provides guidance on designing and constructing a final cover system that will exhibit these characteristics. The following discussion of cover design is condensed from that publication.

The recommended cover design is a multi-layered system intended to minimize leachate formation by promoting surface water drainage using slopes, water-retaining topsoil layers, geotextile filters, and porous drainage layers. The ultimate resistance to water percolating into the waste is provided by a composite hydraulic barrier layer, which consists of a compacted, low-permeability soil component in direct contact with an overlying geomembrane. For underlying waste materials of low strength, a geotextile or geogrid stabilization/ reinforcement layer may also be required to support the hydraulic barrier layer. Figure 47 provides a schematic of the recommended cover design, which consists of the following components, top to bottom:

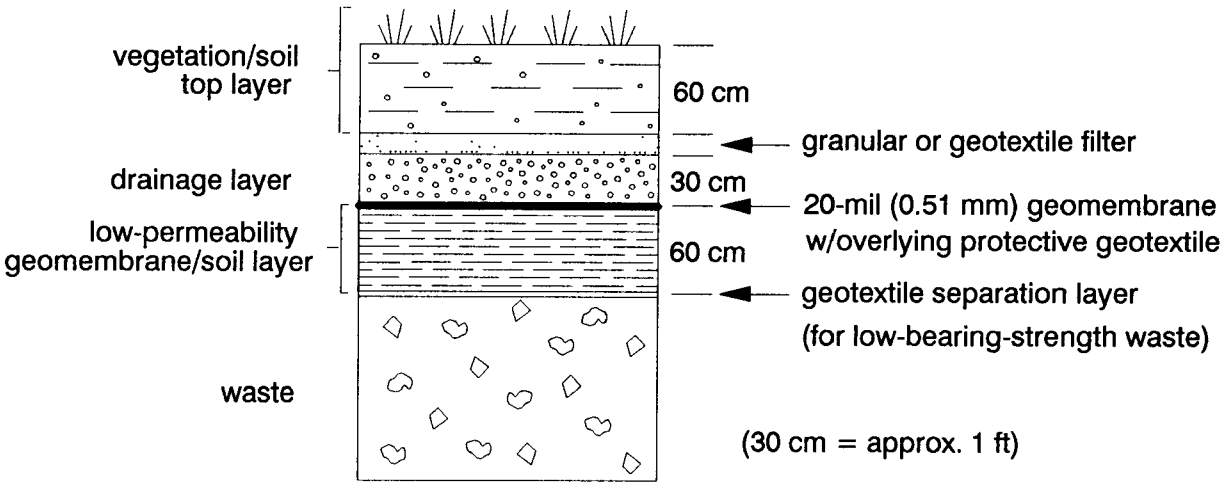

Figure 47. USEPA-recommended landfill cover design.

- protective surface layer (vegetation component and topsoil layer)
- geotextile or granular filter
- drainage layer
- geotextile or sand protection layer
- hydraulic barrier layer (geomembrane and compacted soil component)
- gas vent layer (granular or geosynthetic)
- stabilization layer (if required)

The cover should be constructed with a convex (high in the center) surface topography that has gentle slopes, preferably between 3 and 5 percent, after full settlement. This shape should effectively drain surface waters from the cover without erosion of the protective surface layer (USEPA, 1979b). Geosynthetic materials, such as geotextiles, may be incorporated in and on the surface layer to prevent erosion, particularly where slopes are necessarily steeper or where water flows persistently or at higher velocities.

7.3.4.1 Protective Surface Layer --

The upper layer of the final cover system is a protective surface layer composed of vegetative and topsoil components. A layer of armoring material, such as cobbles, may be substituted under some (e.g., arid) conditions (Figure 48). An armoring layer is designed to prevent erosion and abrasion of the underlying cover components, while functioning with minimum maintenance. If cobbles are used as an armor layer, a geotextile or granular layer placed below it will aid in preventing erosion.

Vegetation -- The uppermost component of the protective surface layer, the vegetative cover (see Figure 47), reduces percolation into the cover system, shields the topsoil from rain, stabilizes the soil against erosive and abrasive forces, binds and anchors the soil to form a stable mass, increases evaporation rates, and enhances site aesthetics.

Selecting the vegetation species is important and depends on factors such as climate, site characteristics, and soil properties. Deep-rooted plant species (especially shrubs and trees) should be avoided to minimize root extension into the drainage and hydraulic barrier layers, thus compromising cover integrity. The vegetation selected should provide a self-maintaining cover that does not require perennial fertilization or irrigation, and minimizes the maintenance required at the closed facility. Several references discuss available plants and site selection criteria (USEPA, 1979b; 1983d; 1983g; and 1985i), and Lee et al (1985). A local extension service, consulting agronomist, or SCS agent should be contacted for recommendations on locally adaptable plant species and information on area crop cultivation.

In some regions of the country (e.g., those with arid and semi-arid climates), establishing a vegetative cover is difficult or impossible. In these areas, a rock, cobble, or other armor mulch layer approximately 5 to 10 centimeters (2 to 4 inches) thick may be substituted for the vegetation (see Figure 48). Again, geotextiles should be considered under rock or cobble layers to aid in preventing soil erosion.

Topsoil Layer -- The topsoil component (see Figure 47) should be designed and constructed to support the vegetative cover by allowing sufficient surface water to infiltrate the topsoil and by retaining sufficient water to sustain plant growth through drought periods. Particle-size distribution, structure, and organic matter content influence the quantity of available water a given soil can supply and should be considered in selecting the topsoil material. In general, medium-textured soils (e.g., loam) have the best overall characteristics for seed germination and plant root system development.

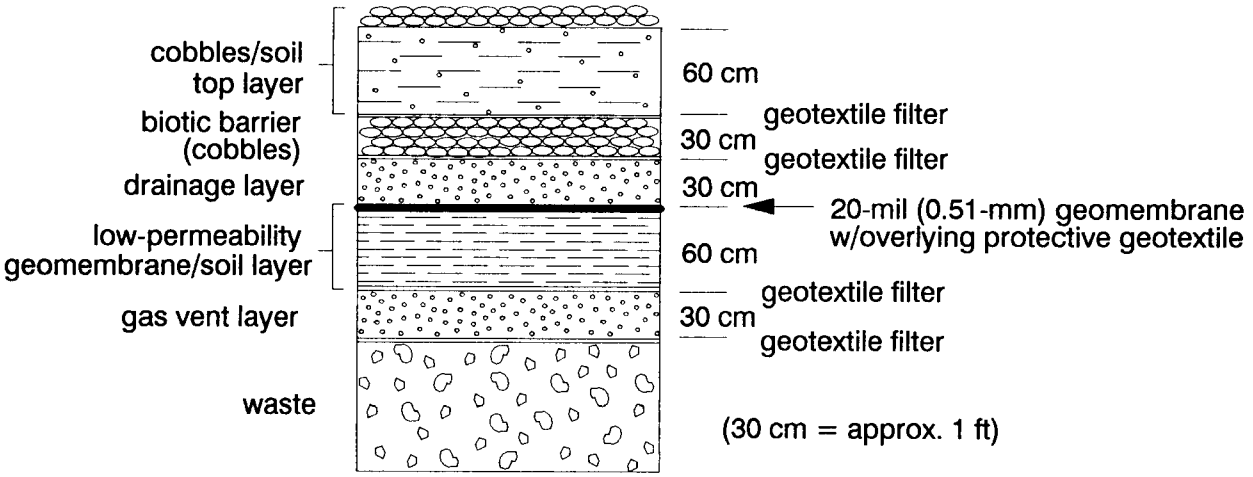

Figure 48. USEPA-recommended landfill cover design with optional layers.

The USEPA-recommended minimum thickness for the topsoil component is 24 inches (60 cm). Some geographic regions and climatic conditions may require a thicker component to provide adequate plant-available water. A professional soil scientist experienced in designing cover systems should be consulted for guidance on soil material selection.

The topsoil is placed in uncompacted layers over a graded granular or geotextile filter overlying the drainage layer. The filter reduces penetration of soil particles into the drainage layer and, therefore, clogging of the layer.

7.3.4.2 Drainage Layer --

The final cover system includes a drainage layer (see Figure 47), located below the protective topsoil layer, which intercepts percolating water. When the precipitation rate is sufficient, the percolating water migrates downward through the topsoil layer and into the drainage layer. When it meets the hydraulic barrier layer, it flows horizontally through the drainage medium to an outlet located at the cover perimeter.

If the drainage layer is constructed of soil, the USEPA recommends a minimum thickness of 12 inches (30 cm) with a minimum hydraulic conductivity of 3.9×10^{-3} inches/sec (1×10^{-2} cm/sec) and a minimum bottom slope of 2 percent after allowance for settlement. The layer may be constructed of granular drainage material classified by the USCS as SP (poorly graded sand).

Alternatively, the drainage layer may be constructed of synthetic materials, such as geonets or prefabricated drainage boards. The layer must have a transmissivity equivalent to, or greater than, the soil drainage layer described above.

Constructing the drainage layer consists of placing a 12-inch (30-cm) layer of granular material or an equivalent synthetic directly over the geomembrane component of the hydraulic barrier layer. Protection against damage to the geomembrane by equipment or personnel should be provided. Fines, if present, should be removed from granular material before construction to prevent clogging of the drainage layer. A synthetic drainage layer may require a geotextile filter between it and the overlying cover soil.

7.3.4.3 Biotic Barrier --

In some locations, although not required, a biotic barrier (Figure 48) may be installed to reduce potential intrusion by burrowing animals or plant roots, which may damage the hydraulic barrier layer and increase percolation through it. Hokanson (1979) found that a biotic barrier of 28 inches (70 cm), consisting of cobbles, overlain by 12 inches (30 cm) of gravel was effective. The cobbles had sufficient mass to deter burrowing animals and the large void spaces, which lacked water and nutrients, acted as a barrier to downward plant root development.

Information is not yet available on an optimum thickness for a barrier layer. Until then, a biotic barrier thickness of 24 inches (60 cm) may be considered sufficient in most circumstances, unless evidence is available to justify a different thickness. The biotic barrier is located between the drainage layer and overlying topsoil.

7.3.4.4 Hydraulic Barrier Layer --

The USEPA-recommended hydraulic barrier layer of the final cover system (Figure 47) consists of two components: a smooth-surfaced, compacted soil component with a maximum field hydraulic conductivity of 3.9×10^{-8} inches/sec (1×10^{-7} cm/sec) overlain by a geomembrane. The geomembrane is placed in direct contact with the soil, a compression seal is created by the overburden pressure, and the two components form a composite barrier to percolating liquid flow.

The recommended minimum thicknesses of the two components are 24 inches (60 cm) for the compacted soil and 20 mils (0.51 mm) for the geomembrane. The actual thicknesses can be

considerably greater, based on site characteristics, soil, synthetic material, and expected external forces (e.g., settlement and overburden pressures). Constructing the compacted soil component and installing the geomembrane are analogous to the practices used in liner construction (see Section 4.5.1). Similar techniques, along with appropriate CQA procedures, should be used to construct the hydraulic barrier. Additional recommendations on barrier design and construction are given by USEPA (1986a; 1987b; and 1989), and information on developing a CQA program is also given by USEPA (1986a).

The hydraulic barrier geomembrane component may be one of several available synthetic materials. It need not be of the same material as the impoundment liner. It is placed directly above the compacted and smoothed soil component and at the bottom of the drainage layer. The compacted soil acts as a buffer and foundation for the geomembrane, and the drainage layer provides protection from overlying materials. The drainage layer should be inspected for materials that may damage the geomembrane. If the drainage layer contains gravel-sized particles, a geotextile should be used to protect the geomembrane. Appropriate CQA procedures, as discussed in Section 3.12, should also be maintained to ensure the integrity of the geomembrane liner installation.

Care in placing and compacting the soil barrier component is essential to achieving a low-permeability hydraulic barrier. The compacted soil component serves as the hydraulic barrier to leakage through the geomembrane. Appropriate construction procedures (see Sections 4.4.1 and 4.4.2) and the CQA Plan (see Section 3.12) must be followed to ensure that the completed two-component hydraulic barrier achieves performance standards.

As outlined in the CQA Plan, field-testing of the completed soil component of the barrier layer is also strongly recommended. Because these tests are time-consuming and can cause construction delays, constructing a test barrier section analogous to the test fill for liner construction (see Section 4.4.1.1), using the same soil material and equipment to be used in the actual barrier, is recommended. Field and laboratory hydraulic conductivity can be measured on the test section. If the results are satisfactory, the number of field measurements required on the actual barrier may be reduced.

7.3.4.5 Gas-Vent Layer --

The gas-vent layer (Figure 48) is recommended in facilities where gases may be generated by decay of biodegradable organic matter buried within the closed facility. The gases produced in biodegradation are usually methane and carbon dioxide and, without a venting system, may present a fire or explosion hazard.

Other gases emanating from volatile materials may be malodorous or toxic. The recommended gas vent consists of a 12-inch (30-cm) layer of porous granular or geosynthetic material similar to that used to construct the drainage layer.

Horizontal, perforated pipes placed laterally within the layer collect the gas and vent it to the surface through vertical riser pipes. The gas may be vented to the atmosphere or collected for disposal or treatment. Adequate soil compaction and geomembrane seals must be provided around the vertical riser pipes. Design and guidance information for gas-vent layers has been provided by USEPA (1979b; 1985i; and 1989a).

The gas-vent layer provides an exit for gases generated within the facility, and should provide a buffer between the waste and compacted soil barrier. The vent layer granular material may be placed over the waste and brought to design elevation (minimum thickness of 12 inches (30 cm) before placing and compacting the soil component of the hydraulic barrier layer.

A vent layer of geosynthetic drainage material may be substituted for a granular layer, if it can provide equivalent performance. Performance requirements should be based on actual measured gas generation times a factor of safety.

7.3.4.6 Hydraulic Barrier Support Layer (Optional) --

In some applications, the waste material may not provide a suitable foundation, by itself, for the construction of the hydraulic barrier. In these cases, a geotextile may be used to help support construction equipment and to provide increased structural support for the hydraulic barrier and overlying layers. Several failure conditions require analysis for the design of a geosynthetic support system. Design guidance may be found in several references (Bonaparte & Christopher, 1987; Christopher, 1990; Christopher & Holtz, 1989; Fowler, 1982; Fowler & Loemer, 1987; Koerner, 1990; and Koerner, 1988)

7.4 POST-CLOSURE ACTIVITIES

Post-closure care and monitoring of the facility are required if closure does not remove or decontaminate all wastes, waste constituents, and contaminated components contained in the surface impoundment. Regulations in 40 CFR 264.117 require the post-closure care period to continue for 30 years after final closure. The USEPA Regional Administrator may reduce or extend the post-closure care period where conditions warrant. Throughout the post-closure care period, the owner/ operator is required (40 CFR 264.228[b]) to:

- maintain the integrity and effectiveness of the final cover, including repairing the cover as necessary to correct the effects of settling, subsidence, erosion, or other events;

- maintain the ground-water monitoring system and comply with other requirements of 40 CFR, Subpart F;

- maintain and monitor the leak detection/collection system, where such a system is present in a double liner; and

- prevent runon and runoff from eroding or otherwise damaging the final cover.

Therefore, post-closure care at a minimum includes a periodic inspection and maintenance program, especially of the final cover, to assure the integrity of the system and prevent migration of hazardous constituents into the environment. Additionally, a ground-water monitoring and leak detection program, which is generally a continuation of monitoring activities from the active life of the facility, is required to detect the migration of waste constituents and/or their presence in the ground water. Financial assurance will also be required by the regulatory agency to ensure that funds are available for the 30-year post-closure care activities. Financial assurance may be provided by means of a trust fund, surety bond, or letter of credit (Rodensky, 1985).

A written post-closure care activities plan must be submitted to the regulatory agency prior to beginning post-closure care. The plan must include, at a minimum (USEPA, 1984e):

- a list of the components to be inspected and frequency of inspections;

- description of remedial action to repair damaged facility components;

- frequency of monitoring device sampling and analysis; and

- the design of runon controls to prevent erosion of final cover.

The plan should achieve a balance between the specific site and design limitations and the need for post-closure care (e.g., sufficient monitoring and maintenance to ensure the integrity of the closed unit). The climate, soil type, and cover design should be considered in planning maintenance activities for the final cover system. Further discussion on the post-closure care plan has been provided by USEPA (1982a and 1984e).

7.4.1 Monitoring

Monitoring activities during the post-closure period include sampling and analysis of ground water from wells located upgradient and downgradient of the closed impoundment (see Section 5.2.3). Sampling methodology, sample-handling protocol, frequency of collection, analysis, and analytical parameters should be outlined in the post-closure care plan, based on regulatory requirements and waste characteristics. USEPA has published guidance on ground-water monitoring well installation, sample collection, and preservation (USEPA, 1985a). Methods for sample analysis are given by USEPA (1982b).

Additional monitoring is required for leak-detection and collection systems or other components designed to detect releases from the facility. Specific monitoring requirements for these components should also be detailed in the written post-closure plan.

7.4.2 Maintenance

Maintenance during post-closure care consists of scheduled inspections, general site maintenance (e.g., mowing vegetation), and remedial repairs in the event of disturbances to the cover or other components. Inspections of the following components of the surface impoundment will be required to ensure the continued effective performance of the facility:

- the final cover system for signs of surface erosion, settlement and subsidence, vegetation damage, and clogging of drainage outlets;
- the leak-detection and collection system, gas vents, and other facility components for potential performance problems and evidence of leachate;
- ground-water monitoring wells for evidence of damage, tampering, or subsidence;
- runon diversion structures for effectiveness; and
- the overall facility condition.

Maintenance of the vegetation is required to ensure that it remains sufficient to protect the cover from erosion. Mowing, watering, revegetation, fertilizer application, and herbicide or insecticide application may be needed to promote plant growth.

Remedial activities are required if components deteriorate. They include repairing eroded areas, damage from settlement or subsidence, stressed vegetation, runon control structures, or

other facility components damaged by wind, water, and weathering. Armoring with cobbles or with geosynthetic materials may often be appropriate to repair and prevent further damage.

Leak collection systems must be maintained in operating condition. These systems require pump maintenance and continued liquid detection and disposal.

7.4.3 Use of the Site

Post-closure site use must be limited to activities that will not disturb the integrity of the final cover, liner, or other components of the closed facility. Cover system design must consider site conditions, surrounding land use, and compatibility of the intended land use with maintenance of the closed unit. A discussion of post-closure site use is given by USEPA (1982c). Tables 15 and 16 summarize the compatibility of features with various future site uses for impoundments closed in-place and by waste removal (clean closure), respectively.

7.4.4 Delisting

Delisting of the waste contained in the closed impoundment is a potential option for eliminating or reducing the requirements for post-closure care and monitoring. If the wastes contained in the surface impoundment prior to closure were listed wastes (as defined in 40 CFR 261) and closure operations rendered them nonhazardous (also defined by 40 CFR 261), the waste may be delisted or otherwise considered nonhazardous. If so, post-closure requirements may be eliminated or reduced, as well as the requirement to notify local land authorities. Delisting of wastes, however, is considered on a site-by-site basis and USEPA delisting authorities should be consulted before submitting the delisting petition. Guidance for submitting a delisting petition is provided by USEPA (1985h).

If hazardous waste or constituents remain in the closed unit after closure (i.e., in-place closure), a notice must also be given to the local land use authority indicating the location and dimensions of the unit. The notice must contain a survey plan prepared by a professional land surveyor, with a note that states the owner's obligation to restrict disturbance of the site (40 CFR 264.116). Additionally, a notice must be given in the deed to the property stating that the land has been used to manage hazardous waste, that land use is restricted, and that a survey plan and record have been filed with local land authorities and regulatory agencies (40 CFR 264.119).

TABLE 15. COMPATIBILITY OF SURFACE IMPOUNDMENT FEATURES AND VARIOUS SITE USES FOR IN-PLACE CLOSURES.*

	Site Uses Upon Closure				
Design Features	Bldgs	Recre-ation Areas	Parking Areas	Agri-culture	Open Spaces
Subsurface Water Control					
Extraction	C	RDA	RDA	C	C
Well point system	C	RDA	RDA	C	C
Cut-off walls	C	C	C	C	C
Subsurface drainage	C	C	C	C	C
Surface Water Control					
Cover	NC	C	C	C	C
Grading	NC	C**	C	C	C
Surface water diversion	C	C	NC	C	C
Levees/floodwalls	NC	NC	NC	NC	C
Drainage/erosion control	RDA	RDA	RDA	C	C
Air Factors					
Passive gas control	NC	C	C	C	C
Active gas control	NC	C	C	NC	C
Control of bird hazard to aircraft	C	C	C	C	C
Surface Area Factors					
Covers	C	C	C	C	C
Access	C	C	C	C	C
Land Buffers	NC	C	C	NC	C

C = compatible, NC = not compatible, RDA = requires design alteration

* from EPA (1982a).
** except ballparks

TABLE 16. COMPATIBILITY OF SURFACE IMPOUNDMENT FEATURES AND VARIOUS SITE USES AFTER HAZARDOUS WASTE REMOVAL.*

	Site Uses Upon Closure				
Design Features	Bldgs	Recre-ation Areas	Parking Areas	Agri-culture	Open Spaces
Subsurface Water Control					
Wells	CIR	CIR	CIR	CIR	CIR
Subsurface drainage	C	C	C	C	C
Surface Water Control					
Cover	RDC	C	C	C	C
Surface water diversion	RDC	C	NC	C	C
Levees/floodwalls	CIR	CIR	CIR	CIR	CIR
Air Factors	C	C	C	C	C
Surface Area Factors	RDC	C	C	C	C

CIR = compatible if removed & dismantled, C = compatible, RDC = requires consideration.

* from EPA (1982a).

REFERENCES

Allis, J. A., B. Harris, and A. L. Sharp. 1963. A Comparison of Performance of Five Rain-Gauge Installations. In Journal of Geophysical Research Vol. 68. pp. 4723-4729.

American Public Health Association. 1985. Standard Methods for the Examination of Water and Wastewater. Washington, DC. 1268 pp.

American Society of Testing and Materials. 1986a. Annual Book of ASTM Standards Construction. Section 4, Vol. 04-08. Philadelphia, PA.

American Society of Testing and Materials. 1986b. Standard Test Method for Unconfined Compressive Strength of Cohesive Soil. D 2166-85. ASTM Committee D-18. In Annual Book of ASTM Standards. Philadelphia, PA.

American Society of Testing and Materials. 1986c. Standard Test Method for One-Dimensional Consolidation Properties of Soils. D2435-80. ASTM Committee D-18. In Annual Book of ASTM Standards. Philadelphia, PA.

American Society of Civil Engineers. 1960. Research Conference on Shear Strength of Cohesive Soils. New York.

American Society of Civil Engineers. 1986. Use of In-situ Tests in Geotechnical Engineering. In In-situ '86. New York.

Anderson, D. C., J. O. Sai, and A. Gill. 1984. Surface Impoundment Soil Liners: Permeability and Morphology of a Soil Liner Permeated by Acid, and Field Permeability Testing for Soil Liners (Draft Report - unpublished). Prepared by K.W. Brown and Associates under EPA Contract 68-03-2943.

Anderson, D. C. and S. G. Jones. 1982. In-Place Closure of Hazardous Waste Surface Impoundments (Unpublished report). USEPA Contract 68-03-2943, WA 8. 97 pp.

Anderson, D. C. and S. G. Jones. 1983. Clay Barrier-Leachate Interaction. In Proceedings of the Fourth National Conference on Management of Uncontrolled Hazardous Waste Sites. Washington, DC.

Anderson, R. D. et al. 1978. Soil Improvement History, Capabilities, and Outlook. ASCE, New York.

Barron, R. A. 1977. The Design of Earth Dams. In Handbook of Dam Engineering, edited by R. Golze. Van Nostrand Reinhold Co., New York. pp. 291-318.

Bass, J. M. 1985. Leachate Collector Systems - Summarizing the State-of-the-Art. In Proceedings of the Eleventh Annual Research Symposium. EPA/600/9-85/013. Cincinnati, OH.

Battelle Pacific Northwest Laboratory. 1982. Rock Riprap Design Methods and Their Applicability to Long-Term Protection of Uranium Mill Tailings Impoundments. NUREG/CR-2684. Prepared for the Nuclear Regulatory Commission, Washington, DC. 62 pp.

Beckett, P. H. T. and R. Webster. 1982. Soil Variability: A Review. In Soils and Fertilizers, vol. 34. pp. 1-15.

Black, R. F. 1954. Precipitation at Barrow, Alaska, Greater than Recorded. Eos. Trans. AGU 35: 203-207.

Bonaparte, R. and Christopher, B. R. 1987. Design and Construction of Reinforced Embankments over Weak Foundations. Record 1153. Transportation Research Board, Washington, DC.

Bonaparte, R. and Gross, B. A. 1990. Field Behavior of Double-Liner Systems. In Waste Containment Systems: Construction, Regulation, and Performance, Edited by R. Bonaparte. Geotechnical Publ. 26, ASCE. pp. 52-83.

Bowles, J. E. 1984. Foundation Analysis and Design. McGraw-Hill, New York. 578 pp.

Brady, N. C. 1974. The Nature and Properties of Soils. MacMillan, New York.

Brown, K. W., G. B. Evans, Jr., and B. D. Frentrup. 1983. Hazardous Waste Land Treatment. Butterworth Press, Woburn, MA.

Brown, K. W., J. C. Thomas, R. L. Lytton, P. Jayawickrama, and S. C. Bahrt. 1986. Quantification of Leak Rates through Holes in Landfill Liners (Unpublished report). Prepared under USEPA Cooperative Agreement CR810940.

Bryant, S. M., J. M. Duncan, and H. B. Seed. 1983. Application of Tailings Flow Analysis to Field Testing. Report submitted to U. S. Bureau of Mines.

Canter, L. W. and R. C. Knox. 1985. Ground Water Pollution Control. Lewis Publishers, Inc. 529 pp.

Chamberlain, E. J. 1981. Comparative Evaluation of Frost-Susceptibility Tests. Transportation Research Record 809.

Chamberlain, E. J., P. N. Gaskin, D. Esch, and R. L. Berg. 1982. Identification and Classification of Frost-Susceptible Soils. ASChE Spring Convention, Las Vegas, NV.

Chan, K. V., B. G. Davey, and H. R. Geering. 1978. Interaction of Treated Sanitary Landfill Leachate with Soil. Jour. of Environmental Quality, vol. 7. pp. 300-310

Christopher, B. R. et al. 1990. Design and Construction Guidelines for Reinforced Soil Structures. 2 volumes. Federal Highway Administration, Washington, DC.

Christopher, B. R. and Holtz, R. D. 1989. Geotextile Engineering Manual. HI-89-050. Federal Highway Administration, Washington, DC.

Church, H. K. 1981. Excavation Handbook. McGraw-Hill, New York.

Clements and Associates. 1985. Chemical, Physical, and Biological Properties of Compounds Present at Hazardous Waste Sites. EPA Unpublished Report.

Cochran, S. R., M. Kaplan, P. Rogoshewski, and C. Furman. 1983. Survey and Case Study Investigation of Remedial Actions at Uncontrolled Hazardous Waste Sites. In Land Disposal of Hazardous Waste - Proceedings of the Ninth Annual Research Symposium. EPA-600/9-83-018.

Considine, D. M. (Ed.) 1974. Process Instruments and Control Handbook. Second Edition. McGraw-Hill, New York. pp. 6-162 to 6-175.

Cooper, J. W. and D. W. Shultz. 1983. Development of Liner Retrofit Concepts for Surface Impoundments. In Land Disposal of Hazardous Waste: Proceedings of the Ninth Annual Research Symposium. EPA-600/9-83-018. Municipal Environmental Research Laboratory, Cincinnati, OH. pp. 211-218.

Corotis, R. B. 1976. Stochastic Considerations in Thunderstorm Modeling. Jour. Hydraulics Div., ASChE, vol. 102. pp. 865-869.

Crawley, W. W., K. W. Brown, and D. C. Anderson. 1984. Inplace Closure of Previously Backfilled and Active Surface Impoundments. In Proceedings of the 5th National Conference on Management of Uncontrolled Hazardous Waste Sites. Washington, DC. pp. 185-188.

Crawley, W. W., R. L. Shiver, and D. C. Anderson. 1985. In-situ Sampling of Hazardous Waste Surface Impoundments. In Proceedings of the 6th National Conference on Management of Uncontrolled Hazardous Waste Sites. pp. 80-83.

Creager, W. P., J. D. Justin, and J. Hinds. 1945. Earth, Rock-fill, Steel, and Timber Dams - Vol. III. In Engineering for Dams. John Wiley & Sons, New York. pp. 749-769.

Cudahy, J. J. and R. L. Sandifer. 1980. Emissions Control Options for the Synthetic Organic Chemicals Industry: Second Emissions Report. USEPA Contract 69-02-2577.

Daniel, D. E., D. C. Anderson, and S. S. Boynton. 1985. Fixed-Wall vs. Flexible-Wall Permeameters. In Hydraulic Barriers in Soil and Rock. ASTM STP 874. 329 pp.

Daniel, D. E. and S. J. Trautwein. 1986. Field Permeability Tests for Earthen Liners. In ASCE Specialty Conference on Use of In-Situ Tests in Geotechnical Engineering. Virginia Polytechnical Institute and State University.

Davis, J. L., R. Singh, M. J. Waller, and P. Gower. 1983. Time-Domain Reflectometry and Acoustic-Emission Monitoring Techniques for Locating Liner Failures. Final Draft Report to EPA by EarthTech Corp.

Day, S. R. and D. E. Daniel. 1985. Hydraulic Conductivity of Two Prototype Clay Liners. Jour. Geotech. Eng., Vol III.

Dobbs, D. M. and A. B. Selber. 1986. Risk Management: Personnel, Equipment and Indemnity. In Proceedings of the National Conference on Hazardous Wastes and Hazardous Materials. Atlanta, GA. pp. 346-347.

Ellis, W. D., J. R. Payne, and G. D. McNabb. 1985. Treatment of Contaminated Soils with Aqueous Surfactants. EPA/600/2-85/029. Hazardous Waste Engineering Research Laboratory, Cincinnati, OH.

Elsbury, B. R., J. M. Norstrom, D. C. Anderson, J. A. Rehage, J. O. Sai, R. L. Shiver, and D. E. Anderson. 1985. Optimizing Construction Criteria for Hazardous Waste Soil Liners. Phase I Interim Report to USEPA Hazardous Waste Engineering Research Laboratory. USEPA Contract 68-02-3250. 89 pp.

Farmer, W. J., M. S. Yang, and J. Letey. 1978. Land Disposal of Hazardous Waste: Controlling Vapor Movement in Soils. In Proceedings of the 4th Symposium on Hazardous Waste. EPA/600/9-78-016.

Federal Highway Administration. 1980. Proceedings of a Symposium on Site Exploration in Soft Ground Using In-situ Techniques. U.S. Dept. of Transportation, Washington, DC.

Federal Highway Administration. 1985. Geotextile Engineering Manual. U.S. Dept. of Transportation, Washington, DC.

Federal Highway Administration. 1990. Geotextile Design and Construction Guidelines. U.S. Dept. of Transportation, Washington, DC.

Ferguson, H. L. and V. A. Znamensky. 1981. Methods of Computation of the Water Balance of Large Lakes and Reservoirs: Vol. 1, Methodology. In Studies and Reports in Hydrology No. 31. UNESCO, Paris, France. 120 pp.

Finkbeiner, M. A. and M. M. O'Toole. 1985. Application of Aerial Photography in Assessing Environmental Hazards and Monitoring Cleanup Operations at Hazardous Waste Sites. In Proceedings of the Sixth National Conference on Management of Uncontrolled Hazardous Waste Sites. Washington, DC. pp. 116-124.

Fowler, J. 1982. Theoretical Design Considerations for Fabric Reinforced Embankments. In Proceedings of the Second International Conference on Geotextiles. Industrial Fabrics Association International. Las Vegas, NV. pp. 665-676.

Fowler, J. and Loemer, R. M. 1987. Stabilization of Very Soft Soils Using Geosynthetics. In Proceedings: Geosynthetics '87. Industrial Fabrics Association International. New Orleans, LA. pp. 289-300.

Franson, M. A. H. 1985. Standard Methods for the Examination of Water and Wastewater: 16th Edition. American Public Health Association. 1268 pp.

Gallant, R. W. 1965-1969. Physical Properties of Hydrocarbons. In Hydrocarbon Processing Journal, Vols. 46-48.

Gillham, R. W., M. J. L. Robin, J. F. Barker, and J. A. Cherry. 1983. Groundwater Monitoring and Sample Bias. American Petroleum Institute. 206 pp.

Giroud, J. P. 1985. Geotextiles and Geomembranes - Definitions, Properties and Design. Industrial Fabrics Association International, St. Paul, MN.

Giroud, J. P. and C. Ah-Line. 1984. Design of Earth and Concrete Covers for Geomembranes. In Proceedings of the International Conference on Geomembranes, Vol. II. Denver, CO. pp. 487-492.

Giroud, J. P. and R. Bonaparte. 1989. Leakage through Liners Constructed with Geomembranes -- Part II. Composite Liners. In Geotextiles and Geomembranes. Elsevier Science Publishers, England. pp. 71-111.

Geo-Slope Programming, Ltd. 1985. PC-Slope. Calgary, Alberta, Canada.

Goldman, L. J., R. S. Truesdale, and C. M. Northeim. 1985. Clay Liner Systems: Current Design and Construction Practices. In Land Disposal of Hazardous Waste, Proceedings of the Eleventh Annual Research Symposium. EPA/600/9-85/013.

Grossman, R. B., B. R. Brasher, D. P. Franzmeier, and J. L. Walker. 1968. Linear Extensibility as Calculated from Natural Clod Bulk Density Measurements. In Soil Science Society of America Proceedings. Volume 32. p. 570-573.

Haan, C. T. 1977. Statistical Methods in Hydrology. Iowa State University Press, Ames, IA. 378 pp.

Hakonson, T. E. 1986. Evaluation of Geologic Materials to Limit Biological Intrusion into Low-Level Radioactive Waste Disposal Sites. Los Alamos National Laboratory Report No. LA-10286-MS.

Hale, F. D., C. B. Murphey, Jr., and R. S. Parrat. 1983. Spent Acid and Plating Waste Surface Impoundment Closure. In Proceedings of the 4th National Conference on Management of Uncontrolled Waste Sites. Washington, DC. pp. 195-201.

Hammer, D. P. and E. D. Blackburn. 1977. Design and Construction of Retaining Dikes for Containment of Dredged Material. Tech. Report D-77-9, U.S. Army Engineer Waterways Experiment Station, Vicksburg, MS. 181 pp.

Harbeck, G. E., M. A. Kohler, and G. E. Coberg. 1958. Water Loss Investigations: Lake Mead Studies. USGS Prof. Paper 298.

Haxo, H. E., N. A. Nelson, and J. A. Miedema. 1985. Solubility Parameters for Predicting Membrane-Waste Liquid Compatibility. In Proceedings of the 11th Annual Research Symposium on Land Disposal of Hazardous Waste. EPA/600/9-85-013. Cincinnati, OH.

Head, K. H. 1980. Manual of Soil Laboratory Testing. Vol. 1, Soil Classification Compaction Tests. Halsted Press, New York.

Head, K. H. 1982. Manual of Soil Laboratory Testing. Vol. 2, Permeability, Shear Strength, and Compression Tests. Halsted Press, New York.

Head, K. H. 1986. Manual of Soil Laboratory Testing. Vol. 3, Effective Stress Tests. Halsted Press, New York.

Herbich, J. B. 1986. Guidelines for Surface Impoundment Freeboard Control. Consulting and Research Services, Inc. Report No. JBH-867.

Hershfield, D. M. 1961. Rainfall Frequency Atlas of the U.S. for Durations from 30 minutes to 24 hours and Return Periods from 1 to 100 Years. Tech. Paper 40, U.S. Weather Bureau. 61 pp.

Hicks, T. G. 1972. Standard Handbook of Engineering Calculations. McGraw-Hill, New York.

Hilf, J. W. 1975. Compacted Fill. In Foundation Engineering Handbook by Winterkorn and Fang (Eds.). Van Nostrand Reinhold Co., New York. pp. 244-311.

Holtz, W. G. 1965. Volume Change. In Methods of Soil Analysis, Part I, ed. by Black. American Society of Agronomy, Madison WI.

Holtz, R. D. and W. D. Kovacs. 1981. An Introduction to Geotechnical Engineering. Prentice-Hall, Inc., Englewood Cliffs, NJ. 733 pp.

Huang, Y. H. 1983. Stability Analysis of Earth Slopes. Van Nostrand Reinhold Co., New York. 305 pp.

Hunt, G. E., V. E. Hodge, P. M. Wagner, and P. A. Spooner. 1983. Collection of Information on the Compatibility of Grouts with Hazardous Wastes. In Proceedings of the Ninth Annual Research Symposium. EPA/600/9-83-018.

Jenson, M. E. (Ed.) 1973. Consumptive Use Water and Irrigation Water Requirements. ASCE, New York. 215 pp.

Jeyapalan, J. K. 1980. Analyses of Flow Failures of Mine Tailings Impoundments. Dissertation presented to the University of California, Berkeley, CA.

Jeyapalan, J. K. 1983. An Engineering Manual for the Evaluation of Stability of Dikes (Unpublished). USEPA Permit Writers Training Program.

Jeyapalan, J. K. 1986. Personal Communication. Programs available for Wisconsin Waste Management Training Center. University of Wisconsin, Madison, WI.

Johnson, A. W. and J. R. Sallberg. 1960. Factors that Influence Field Compaction of Soils. Bulletin 272, Highway Research Board, Washington, DC. 206 pp.

Johnson, S. J. 1975. Analysis and Design Relating to Embankments: A State-of-the-Art Review. Soils and Pavement Laboratory, U.S. Army Engineer Waterways Experiment Station, Vicksburg, MS.

Johnson, V. R. 1981. Leak Detection Systems for Landfills and Impoundments. Third National Conference on Hazardous Materials Management, Anaheim, CA.

Karassik, I. J., W. C. Krutzsch, W. H. Fraser, and J. P. Messina (Eds.) 1986. Pump Handbook: 2nd Edition. McGraw-Hill, New York.

Kays, W. B. 1987. Construction of Linings for Reservoirs, Tanks and Pollution Control Facilities. Second Edition. John Wiley & Sons, New York. 379 pp.

Keijman, J. Q. and R. W. R. Koopmans. 1973. A Comparison of Several Methods of Estimating the Evaporation of Lake Flevo. In Hydrology of Lakes. Helsinki Symposium, International Association of Hydrological Sciences. Vol. 109. pp. 225-232.

Keith, L. H., W. Crummett, J. Deegan, Jr., R. A. Libby, J. K. Taylor and G. Wentler. 1983. Principles of Environmental Analysis. In Analytical Chemistry, vol. 55. pp. 2210-2218.

Kent, K. M. 1973. A Method for Estimating Volume and Rate of Runoff in Small Watersheds. Soil Conservation Service TP-49. 62 pp.

Kerfoot, H. B., J. A. Kohout, and E. N. Amick. 1986. Detection and Measurement of Groundwater Contamination by Soil-Gas Analysis. In Proceedings of the National Conference on Hazardous Wastes and Hazardous Material. Atlanta, GA. pp. 22-26.

Keulegan, G. H. 1951. Wind Tides in Small Closed Channels. Jour. of Research of the National Bureau of Standards. Vol. 46.

Kingsbury, R. P. 1986. Personal Communication. American Colloid Co., Skokie, IL.

Knipschild, F. W., R. Taprogge, and H. Schneider. 1979. Quality in Production and Installation of Large Area Sealing Sections of High Density Polyethylene. Shlegel Engineering, Chelmsford, Essex, United Kingdom.

Koerner, R. M. and J. P. Welsh. 1980. Construction and Geotechnical Engineering Using Synthetic Fabrics. John Wiley & Sons, New York. 267 pp.

Koerner, R. M., Editor. 1988. Soft Soil Stabilization Using Geosynthetics. Conference Proceedings. Elsevier Applied Science Publishing Company.

Koerner, R. M. 1990. Designing with Geosynthetics. Second Edition. Prentice-Hall, Englewood Cliffs, NJ. 1990.

Kohler, M. A. 1954. Lake and Pan Evaporation: Water Loss Investigations: Lake Hefner Studies. USGS Prof. Paper 269. pp. 127-148.

Kohler, M. A., T. J. Nordenson, and D. R. Baker. 1959. Evaporation Maps for the United States. Tech. Paper No. 37, U.S. Weather Bureau, Washington, DC.

Kurtyka, J. C. 1953. Precipitation Measurements Study. Report of Investigations No. 20, Illinois State Water Survey. 178 pp.

Lambe, T. W. 1951. Soil Testing. John Wiley & Sons, New York.

Lambe, T. W. 1958. Compacted Clay: Engineering Behavior. Award-winning ASCE papers in Geotechnical Engineering, 1950-1959. Published 1977. ASCE, New York. pp. 668-706.

Larson, L. W. 1971. Precipitation and its Measurement: A State of the Art. Water Resources Series No. 24, Water Resources Research Institute, University of Wyoming. 74 pp.

Larson, L. W. and E. L. Peck. 1974. Accuracy of Precipitation Measurements for Hydrological Modeling. Vol. 10, Water Resources Research. pp. 857-863.

Lee, C. R., J. G. Skogerboe, K. Eskew, R. A. Price, and N. R. Page. 1985. Restoration of Problem Soil Materials at Corps of Engineers Construction Sites. DACW39-80-C0098. USACE, Dept. of Army.

Lewis, R. W. 1982. Custom Designing of Monitoring Wells for Specific Pollutants and Hydrogeologic Conditions. Second Annual Symposium on Aquifer Restoration and Ground Water Monitoring. National Water Well Association, Worthington, OH.

Lindsay, W. L. 1979. Chemical Equilibria in Soils. John Wiley & Sons, New York. 449 pp.

Linsley, R. K., M. A. Kohler, and J. L. H. Paulhus. 1982. Hydrology for Engineers: 3rd Edition. McGraw-Hill, New York. 508 pp.

Linsley, R. K. and J. B. Franzini. 1979. Water Resources Engineering. McGraw-Hill, New York.

Lippitt, J. M., T. G. Prothero, W. F. Martin, and L. P. Wallace. 1984. An Overview of Worker Protection Methods. In Proceedings of Hazardous Material Spills Conference. pp. 354-361.

Lowe, J. and L. Karafiath. 1960. Stability of Earth Dams upon Drawdown. In Proceedings of the First Pan American Conference on Soil Mechanics and Foundation Engineering, Volume 2. Mexico City. pp. 537-552.

Machemehl, J. L. and J. B. Herbich. 1970. Effects of Slope Roughness on Wave Run-up on Composite Slopes. TAMU-SG-70-222. Texas A&M University Sea Grant Program.

Mackay, D. and Leinonen. 1975. Unsteady State Predictive Model for Non-aerated Surface Impoundments.

Mackay, D. and A. Yeun. 1983. Mass Transfer Coefficient Correlations for Volatilization of Organic Solutes from Water. In Environmental Science and Technology, Volume 17. pp. 211-217.

Malone, P. G., L. W. Jones, and J. P. Burkes. 1983. Application of Solidification/Stabilization Technology to Electroplating Wastes. In Proceedings of the 9th Annual Research Symposium for Land Disposal of Hazardous Wastes. EPA-600/9-83-108.

Mather, J. R. 1978. The Climatic Water Budget in Environmental Analysis. D. C. Heath and Co., Lexington, MA. 239 pp.

Mausbach, J. J., B. R. Brasher, R. D. Yeck, and W. D. Nettleton. 1980. Variability of Measured Properties in Morphologically Matched Pedons. Soil Science of America Journal, vol. 44. pp. 358-363.

McCuen, R. H. 1987. A Guide to Hydraulic Analysis Using SCS Methods. Prentice-Hall Inc., Englewood Cliffs, NJ.

McGuinness, J. L. 1966. A Comparison of Lysimeter Catch and Rain Gauge Catch. ARS 41-124. USDA Agricultural Research Service. 9 pp.

McGuinness, J. L. and G. W. Vaughan. 1969. Seasonal Variations in Rain Gauge Catch. In Water Resources Research, Vol. 5. pp. 1142-1146.

McRae, T.G. 1984. Bagi: A New Concept for Detecting and Tracking Hazardous Gases. In Proceedings on Hazardous Materials Spills Conference. pp. 165-173.

Meade, J. P. and W. D. Ellis. 1985. Decontamination Techniques for Mobile Response Equipment Used at Waste Sites. EPA/600/2-85/105.

Means, R. E. and J. V. Parcher. 1963. Physical Properties of Soils. Charles E. Merrill Books, Inc., Columbus, OH. 464 pp.

Melvold, R. W., J. D. Byroade, and L. T. McCarthy, Jr. 1984. Emergency Response Procedures for Control of Hazardous Substances Releases. In Proceedings of Hazardous Materials Spills Conference. pp. 141-150.

Metcalf and Eddy, Inc. 1979. Wastewater Engineering, Treatment/Residue/Reuse, 2nd Ed. McGraw-Hill, New York.

Meyer, R. A., J. E. Brugger, and D. J. Lawrence. 1984. Mapping Sunken Pollutant Pools with Depth Finders. In Proceedings of Hazardous Materials Spills Conference. pp. 214-219.

Miller, D. E. 1969. Flow and Retention of Water in Layered Soils. Conservation Report No. 13, Agricultural Research Service, USDA. 684 pp.

Miller, J. F., R. H. Frederick, and R. J. Tracey. 1974. Precipitation Frequency Atlas for the Coterminous Western United States. NOAA Atlas 2 (11 vols.).

Minning, R. C. 1982. Monitoring Well Design and Installation. In Second Annual Symposium on Aquifer Restoration and Ground Water Monitoring, National Water Well Association, Worthington, OH.

Mitchell, D. H., M. A. McLean, and T. E. Gates. 1988. Stability of Lined Slopes at Landfills and Surface Impoundments. EPA/DOE Interagency Agreement DW 89930846-01-0, Battelle Pacific Northwest Laboratories, Richland, WA.

Mitchell, J. K., D. R. Hooper, and R. G. Campanella. 1965. Permeability of Compacted Clay. Jour. of Soil Mechanics and Foundation Div., ASCE Proceedings, vol. 91. pp. 41-65.

Mundell, J. A. and B. Bailey. 1985. The Design and Testing of Compacted Clay Barrier Layer to Limit Percolation through Landfill Covers. In Hydraulic Barriers in Soil and Rock. ASTM STP 874. Philadelphia, PA. pp. 246-262.

Nadeau, R. J., J. P. Lafornara, G. S. Klinger, and T. Stone. 1985. Measuring Soil Vapors for Defining Subsurface Contaminant Plumes. In Proceedings of the Sixth National Conference on Management of Uncontrolled Hazardous Waste Sites. Washington, DC. pp. 128-129.

National Institute of Occupational Safety and Health. 1985. Occupational Safety and Health Guidance Manual for Hazardous Waste Site Activities. NIOSH Pub. No. 85-115.

Naval Facilities Engineering Command. 1982. Design Manuals 7.1, 7.2, and 7.3. Dept. of the Navy, Alexandria, VA.

Neff, E. L. 1977. How Much Does a Rain Gauge Gauge? Jour. of Hydrology, Vol. 35. pp. 213-220.

Neuwirth, F. 1973. Experience with Evaporation Pans at a Shallow Steppe Lake in Austria. In Hydrology of Lakes, Helsinki Symposium. International Association of Hydrological Sciences. Vol. 109. pp. 209-297.

NOAA. Climatography of the United States No. 81. National Climatic Center, Asheville, NC.

NOAA. 1968. Climatic Atlas of the United States. National Climatic Data Center, Asheville, NC. 80 pp.

NOAA. 1983. Selective Guide to Climatic Data Sources: Key to Meteorological Records Documentation No. 4.11. National Climatic Data Center, Asheville, NC. 338 pp.

Nordenson, T. J. 1962. Evaporation from the 17 Western States. USGS Prof. Paper No. 272-D.

Olson, G. W. 1976. Criteria for Making and Interpreting a Soil Profile Description. In Kansas Geological Survey Bulletin No. 212. University of Kansas Press, Lawrence, KS. 47 pp.

Olson, R. Z. and D. E. Daniel. 1981. Measurement of the Hydraulic Conductivity of Fine-Grained Soils. In Permeability and Groundwater Contaminant Transport. ASTM-STP 746. pp. 18-64.

Osborne, H. B., L. J. Lane, and J. F. Hundley. 1972. Optimum Gauging of Thunderstorm Rainfall in Northeastern Arizona. In Water Resources, vol. 8. pp. 259-265.

Overcash, M. R. and D. Pal. 1979. Design of Land Treatment System for Industrial Wastes - Theory and Practice. Ann Arbor Science, Ann Arbor, MI. 684 pp.

Perloff, W. H. and W. Baron. 1976. Soil Mechanics. Ronald Press Co., New York.

Pettyjohn, W. A., W. J. Dunlap, R. L. Cosby, and J. W. Keeley. 1981. Sampling Ground Water for Organic Contaminants. In Ground Water, vol. 19. pp. 180-189.

Proctor, R. R. 1933a. Fundamental Principles of Soil Compaction. In Engineering News-Record. August 30. pp. 348-351.

Proctor, R. R. 1933b. Description of Field and Laboratory Methods. In Engineering News-Record. September 7. pp. 286-289.

Proctor, R. R. 1933c. Field and Laboratory Verification of Soil Suitability. In Engineering News-Record. September 21. pp. 348-351.

Proctor, R. R. 1933d. New Principles Applied to Actual Dam-Building. In Engineering News-Record. September 28. pp. 372-376.

Pruitt, W. O. and R. L. Snyder. 1984. Crop Water Use. In Irrigation with Reclaimed Municipal Wastewater. Report 84-1, California State Water Resources Control Board, Sacramento, CA.

Reades, D. W. and C. D. Thompson. 1984. Quality Control Testing and Monitoring of Performance of Clay Till Liner. CEO-CGS Seminar on Design and Construction of Municipal and Industrial Waste Disposal Facilities. Malton, Ontario.

Rishel, H. L., T. M. Boston, and C. J. Schmidt. 1984. Costs of Remedial Response Actions at Uncontrolled Hazardous Waste Sites. Pollution Technical Review, no. 35. Noyes Publications, Park Ridge, NJ.

Rodda, J. C. 1968. The Rainfall Measurement Problem. In Geochemistry, Precipitation, Evaporation, Soil Moisture, Hydrometry. General Assembly of Bern. International Assoc. of Scientific Hydrology Publication 78. pp. 215-231.

Rodensky, Robin. 1985. Closure and Post-Closure Care Regulations: Implications of Recent Amendments. In Proceedings of National Conference on Hazardous Wastes and Environmental Emergencies. pp. 29-32.

Sai, J. O. and J. D. Zabcik. 1985. Estimate of Surface Impoundment Construction Cost Under RCRA Amendments of 1984 (Draft report). Prepared by K. W. Brown and Associates under USEPA Contract 68-03-1816.

Saint-Venant, B. D. 1871. Theory of Unsteady Water Flow with Application to River Floods and to Propagation of Tides in River Channels. In Computes Rendus, Vol. 73. Academy of Sciences, Paris, France.

Saville, T. 1956. Wave Run-up on Shore Structures. Jour. of Waterways and Harbors Division, ASCE, Vol. 82. pp. 925-1 through 925-14.

Saxton, K. E. and J. L. McGuinness. 1982. Evaporation. In Hydrologic Modeling of Small Watersheds, Monograph No. 5, American Society of Agricultural Engineers, St. Joseph, MI. 533 pp.

Scalf, M. R., J. F. McNabb, W. J. Dunlap, R. L. Cosby, and J. Fryberger. 1981. Manual of Groundwater Sampling Procedures. National Water Well Association/EPA Series. 93 pp.

Schmertmann, J. H. 1970. Static Cone to Compute Static Settlement over Sand. Jour. Soil Mechanics and Foundations Divisions, vol. SM3.

Schmidt, C. E., W. D. Balfour, and R. D. Cox. 1982. Sampling Techniques for Emissions Measurements at Hazardous Waste Sites. In Proceedings of the 3rd National Conference on Management of Uncontrolled Waste Sites. Washington, DC.

Scott, C. R. 1980. An Introduction to Soil Mechanics and Foundations. Third Edition. Applied Science Publishers, Ltd., London England. 406 pp.

Seed, H. B. 1979. Considerations in Seismic Design of Earth and Rockfill Dams. 19th Rankine Lecture. London, England.

Shen, T. T. 1982. Estimation of Organic Compound Emissions from Waste Lagoons. Jour. Air Pollution Control Assoc., vol. 32. pp. 79-82.

Sherard, J. L. et al. 1963. Earth and Earth-Rock Dams. John Wiley & Sons, New York.

Shiver, R., S. Johnson, and J. D. Zabcik. 1985. Methods for Detecting Liquid Level and Maintaining Minimum Freeboard at Hazardous Waste Surface Impoundments (Draft report). Prepared by K. W. Brown and Associates under USEPA Contract 68-03-1816.

Shultz, D. W., D. L. Laine, and J. W. Cooper. 1985. Development of a Technique for Retrofitting Impoundments with Geomembranes. In Land Disposal of Hazardous Waste: Proceedings of the Eleventh Annual Research Symposium. EPA/600/9-85/013. Hazardous Waste Engineering Research Laboratory, Cincinnati, OH. pp. 321-331.

Smith, G. N. 1982. Elements of Soil Mechanics for Civil and Mining Engineers, 5th Edition. Granada Publishing. London, England. 493 pp.

Smith, R. L., D. T. Musser, and T. J. McGrood. In-situ Solidification/Fixation of Industrial Wastes. In Proceedings of 6th National Conference on Management of Uncontrolled Hazardous Wastes. Washington, DC. pp.231-233.

Soil Survey Staff. 1975. Soil Taxonomy. U.S. Government Printing Office, Washington, DC. 754 pp.

Sowers, G. F. 1979. Introductory Soil Mechanics and Foundations: Geotechnical Engineering. Fourth Edition. McMillan Publishing Co., Inc., New York. 621 pp.

Sowers, G. F. and J. G. Gulliver. 1955. Effects of Varying Tamping-Foot Width on Compaction of Cohesive Soil. Highway Research Board, Proceedings of the 34th Annual Meeting, Washington, DC. pp. 598-601.

Spangler, M. G. and R. L. Handy. 1982. Soil Engineering (4th Edition). Harper and Row, New York. 819 pp.

Spencer, W. F. and M. M. Cliath. 1977. Transfer of Organic Pollutants Between the Solid-Air Interface. In Fate of Pollutants in the Air and Water Environments edited by H. Saffett. John Wiley & Sons, New York. pp. 107-109.

Spooner, P. A. 1985. Stabilization/Solidification Alternatives for Remedial Action. In Proceedings of the 6th National Conference on Management of Uncontrolled Hazardous Wastes. Washington, DC. pp. 214-220.

Spooner, P. A., G. E. Hunt, V. E. Hodge, P. M. Wagner, and I. R. Melyk. 1984. Compatibility of Grouts with Hazardous Wastes. EPA-600/2-84-015. Municipal Environmental Research Laboratory, Cincinnati, OH.

Springer, C., P. D. Lunney, and K. T. Valsaraj. 1984. Emission of Hazardous Chemicals from Surface and Near-Surface Impoundments to Air. USEPA Cooperative Agreement 808161-02.

Stanfield, D. F. and K. S. McMillan. 1985. Inspection of Hazardous Waste Sites Using Ground-Penetrating Radar (GPR). In Proceedings of the National Conference on Hazardous Wastes and Environmental Emergencies. pp. 244-249.

Stanhill, G. 1970. The Heat and Water Balance of a Fishpond in the Upper Galilee of Israel. Israel Jour. of Agricultural Research, vol. 20. pp. 21-39.

Stevens, D. K. 1986. Optimization of Free Liquid Removal Alternatives in the Closure of Hazardous Waste Surface Impoundments. In Proceedings of the National Conference on Hazardous Wastes and Hazardous Materials. Atlanta, GA. pp. 148-153.

Stewart, W. S. 1978. State-of-the-Art Study of Land Impoundment Techniques. EPA/600/2-78-196. USEPA, Cincinnati, OH.

Terzaghi, K. and R. B. Peck. 1967. Soil Mechanics in Engineering Practice. John Wiley & Sons, New York.

Thibodeaux, L. J. 1981. Estimating Air Emissions from Hazardous Waste Landfills. Journal of Hazardous Materials, Vol. 4, pp. 235-244.

Thibodeaux, L. J., C. Springer, and R. S. Parker. 1985. Volatile Organic Emissions Reductions from Surface Impoundments by the Use of Wind Fences and Wind Barriers. In Land Disposal of Hazardous Waste, Proceedings of the Eleventh Annual Research Symposium. EPA/600/9-85/013.

Thibodeaux, L. J., D. G. Parker, and H. H. Heck. 1982. Measurement of Volatile Chemical Emissions from Wastewater Basins. EPA600/2-82-095.

Thibodeaux, L. J. and S. T. Hwang. 1982. Land Farming of Petroleum Wastes -- Modelling the Air Emissions Problem. Environmental Progress, Vol. 1, pp. 42-46.

Topp, G. C. and J. L. Davis. 1981. Detecting Infiltration of Water Through Soil Cracks by Time-Domain Reflectometry. In Geoderma, vol. 26. pp.13-23.

Toyoshima, O., N. Shuto, and H. Hashimoto. 1966. Wave Run-up on Coastal Structures. In Coastal Engineering in Japan, vol. 9. pp. 119-126.

Tratnyek, J., P. Costas, and W. Lyman. 1985. Test Methods for Determining the Chemical Waste Compatibility of Synthetic Liners. EPA/600/2-85-029. Hazardous Waste Engineering Research Laboratory, Cincinnati, OH.

Unger, M., J. O. Sai, R. Shiver, J. Jeyapalan, G. B. Evans, Jr., and D. C. Anderson. 1985. Comparison of Multiple Small versus Single Large Surface Impoundments (Draft Report). Prepared by K. W. Brown and Associates under EPA Contract 68-03-1816.

U.S. Army Corps of Engineers. 1957. Effect of Lift Thickness and Tire Pressure: Soil Compaction Investigation Report No. 8. Tech. Memorandum 3-271. Waterways Experiment Station, Vicksburg, MS.

U.S. Army Corps of Engineers. 1970a. Laboratory Soils Testing: Engineering Manual 1110-2-1906.

U.S. Army Corps of Engineers. 1970b. Engineering and Design Stability of Earth and Rock-Fill Dams. USGPO.

U.S. Army Corps of Engineers. 1977. Construction Control for Earth and Rock-fill Dams. Engineer Manual EM 1110-2-1911. Dept. of the Army, Washington, DC.

U.S. Army Corps of Engineers. 1984. Shore Protection Manual: Volumes 1 and 2 (4th Edition). Waterways Experiment Station. USGPO.

U.S. Bureau of Public Roads. 1967. Use of Riprap for Bank Protection. Hydraulic Engineering Circular no. 11. Federal Highway Administration.

U.S. Bureau of Reclamation. 1974. Design of Small Dams. Dept. of the Interior, Washington, DC. 816 pp.

U.S. Bureau of Reclamation. 1981. Ground Water Manual. U.S. Government Printing Office, Denver, CO. 480 pp.

U.S. Dept. of Agriculture. 1979. Engineering Field Manual for Conservation Practices (3rd Edition). Soil Conservation Service.

USEPA. 1978. Liners for Sanitary Landfills and Chemical and Hazardous Waste Disposal Facilities. EPA/600/9-78-005.

USEPA. 1979a. Methods for Chemical Analysis of Water and Wastes. EPA-600/4-79-020. Office of Research & Development, Cincinnati, OH.

USEPA. 1979b. Design and Construction of Covers for Solid Waste Landfills. EPA-600/2-79-165. Municipal Environmental Research Laboratory, Cincinnati, OH. 250 pp.

USEPA. 1980a. Samplers and Sampling Procedures for Hazardous Waste Streams. EPA-600/2-80-018. NTIS PB 80-135353. 69 pp.

USEPA. 1980b. Procedures Manual for Groundwater Monitoring at Solid Waste Disposal Facilities. SW-611. Office of Water and Waste Management, Washington, DC. 269 pp.

USEPA. 1980c. Interim Guidelines and Specifications for Preparing Quality Assurance Project Plans. QAMS-005/80. Prepared by the Office of Monitoring Systems and Quality Assurance.

USEPA. 1982a. Closure of Hazardous Waste Surface Impoundments. SW-873. Office of Solid Waste and Emergency Response. 92 pp.

USEPA. 1982b. Test Methods for the Evaluation of Solid Waste: Physical/Chemical Methods. SW-846. Office of Solid Waste and Emergency Response. USGPO No. 055-00281001-2.

USEPA. 1982c. Hazardous Waste Management Systems, Permitting Requirements for Disposal Facilities. Federal Register, Vol. 47, No. 43. July 26, 1982.

USEPA. 1982d. Draft RCRA Guidance for Surface Impoundments, Liner Systems, Final Cover, and Freeboard Control. Office of Solid Waste and Emergency Response.

USEPA. 1982e. Groundwater Monitoring Guidance for Owners and Operators of Interim Status Facilities. SW-963. Office of Solid Waste and Emergency Response, Washington, DC. 176 pp.

USEPA. 1982f. Guide to the Disposal of Chemically Stabilized and Solidified Waste. Municipal Environmental Research Laboratory, Cincinnati, OH. 114 pp.

USEPA. 1982g. Evaluating Cover Systems for Solid and Hazardous Waste. SW-867. Office of Solid Waste and Emergency Response, Washington, DC.

USEPA. 1982h. Design Manual - Dewatering Municipal Wastewater Sludges. EPA-625/1-82-014. Municipal Environmental Research Laboratory, Cincinnati.

USEPA. 1983a. Surface Impoundment Assessment National Report. EPA/570/9-84-002.

USEPA. 1983b. Lining of Waste Impoundments and Disposal Facilities. Office of Solid Waste & Emergency Response. SW-870. 448 pp.

USEPA. 1983c. Landfill and Surface Impoundment Performance Evaluation. SW-869. Office of Solid Waste and Emergency Response.

USEPA. 1983d. Handbook for Evaluating Remedial Action Technology Plans. EPA/600/2-83-076. Office of Research and Development, Washington, DC. 439 pp.

USEPA. 1983e. Land Treatment of Hazardous Wastes. SW-874. Office of Solid Waste and Emergency Response.

USEPA. 1983f. Preparation of Soil Sampling Protocol: Technologies and Strategies. EPA-600/4-83-020.

USEPA. 1983g. Standardized Procedures for Planting Vegetation on Completed Sanitary Landfills. EPA-600/2-83-055. Municipal Environmental Research Laboratory, Cincinnati, OH.

USEPA. 1984a. Assessment of Hazardous Waste Surface Impoundment Technology Case Studies and Perspectives of Experts. EPA/600/2-84-173. 300pp.

USEPA. 1984b. Use of Water Balance to Quantify Seepage from Hazardous Waste Surface Impoundments. Prepared by K.W. Brown and Associates under EPA Contract 68-03-2943, WA 14.

USEPA. 1984c. Preliminary Assessment of Hazardous Waste Pretreatment as an Air Pollution Control Technique (Draft Report). Prepared by Research Triangle Institute under EPA Contract 68-03-3149.

USEPA. 1984d. Field Studies of Liner Installation Methods at Landfills and Surface Impoundments. EPA/600/2-84-168. Municipal Environmental Research Laboratory, Cincinnati, OH. 58 pp.

USEPA. 1984e. Permit Applicant's Guidance Manual for Hazardous Waste Land Treatment, Storage, and Disposal Facilities. EPA/530-SW-84-004. Office of Solid Waste and Emergency Response, Washington, DC.

USEPA. 1984f. A Guide to the Selection of Materials for Monitoring Well Construction and Groundwater Sampling.

USEPA. 1984g. Assessment of Innovative Techniques to Detect Waste Impoundment Liner Failures. EPA-600/2-84-041. Municipal Environmental Research Laboratory, Cincinnati, OH. 139 pp.

USEPA. 1984h. Electrical Resistivity Technique to Assess the Integrity of Geomembrane Liners. EPA-600/2-84-180. Municipal Environmental Research Laboratory, Cincinnati, OH. 63 pp.

USEPA. 1984j. Review of In-Place Treatment Technology for Contaminated Surface Soils, Vol. 1: Technical Evaluation. EPA-540/2-84-003a. Office of Research and Development.

USEPA. 1984k. Soil Sampling Quality Assurance User's Guide. EPA-600/4-84-043.

USEPA. 1985a. RCRA Groundwater Monitoring Technical Enforcement Guidance Document (Draft). Office of Solid Waste and Emergency Response, Washington, DC.

USEPA. 1985b. RCRA Preliminary Assessment/Site Investigation Guidance (Draft). Office of Solid Waste, Washington, DC.

USEPA. 1985c. Air Emissions for Quiescent Surface Impoundments Emissions Data and Model Review (Draft Technical Note). Prepared by GCA Corp. under EPA Contract 68-01-6871, WA 49.

USEPA. 1985d. Field Evaluations of Hazardous Waste Pretreatment as an Air Pollution Control Technique (Draft Report). Prepared by Research Triangle Institute and Associated Technologies, Inc. under EPA Contract 68-02-3992.

USEPA. 1985e. In-situ Methods for the Control of Emissions for Surface Impoundments and Landfills (Draft Final Report). Prepared by the University of Arkansas and Louisiana State University under EPA Cooperative Agreement CR810856.

USEPA. 1985f. Evaluation of Air Emissions from Hazardous Waste Treatment, Storage, and Disposal Facilities. EPA 600/2-85-057. Municipal Environmental Research Laboratory, Cincinnati, OH. NTIS PB 85-203792.

USEPA. 1985g. Modeling Remedial Actions at Uncontrolled Hazardous Waste Sites. EPA/540/2-85/001. Office of Solid Waste and Emergency Response, Washington, DC.

USEPA. 1985h. Petitions to Delist Hazardous Wastes: A Guidance Manual. EPA/530-SW-85-003. Office of Solid Waste and Emergency Response, Washington, DC. 54 pp.

USEPA. 1985i. Covers for Uncontrolled Hazardous Waste Sites. EPA/540/2-85/002. Hazardous Waste Engineering Research Laboratory, Cincinnati, OH.

USEPA. 1985j. Liner Materials Exposed to Hazardous and Toxic Wastes. EPA/600/2-84/169. NTIS PB 85 121333. Hazardous Waste Engineering Research Laboratory, Cincinnati, OH. 256 pp.

USEPA. 1985k. Handbook - Remedial Action at Waste Disposal Sites (Revised). EPA-625/6-85-006. Hazardous Waste Engineering Research Laboratory, Cincinnati, OH and Office of Solid Waste and Emergency Response, Washington, DC.

USEPA. 1986a. Technical Guidance Document. Construction Quality Assurance for Hazardous Waste Land Disposal Facilities. EPA/530-SW-85-021. Office of Solid Waste and Emergency Response, Washington, DC. 100 pp.

USEPA. 1986b. Minimum Technology Guidance Document on Freeboard Control for Surface Impoundments (Draft). Prepared by K.W. Brown and Associates under EPA Contract 68-03-1816.

USEPA. 1986c. Geotechnical Analysis for Review of Dike Stability (GARDS) (Draft). Prepared by Dept. of Civil Engineering, University of Cincinnati under EPA Contract 68-03-3183.

USEPA. 1986d. Revised Draft Protocol for Groundwater Inspections at Hazardous Waste Treatment, Storage, and Disposal Facilities. USEPA Hazardous Waste Ground-Water Task Force.

USEPA. 1986e. Reference Manual of Countermeasures for Hazardous Substances Releases: Draft Report. Prepared by Combustion Engineering/Rockwell International Corporation under EPA Contract 68-03-3014.

USEPA. 1986f. Decontamination Techniques for Mobile Response Equipment Used at Waste Sites (State-of-the-Art Survey). EPA/600/2-85/105. Hazardous Waste Engineering Research Laboratory, Cincinnati, OH.

USEPA. 1986g. Handbook for Stabilization/Solidification of Hazardous Wastes. EPA/540/2-86/001. Hazardous Waste Engineering Research Laboratory, Cincinnati, OH.

USEPA. 1987a. Minimum Technology Guidance on Double Liner Systems for Landfills and Surface Impoundments - Design, Construction, and Operation. EPA/530-SW-85-014. Office of Solid Waste and Emergency Response, Washington, DC. 71 pp.

USEPA. 1987b. Design, Construction, and Maintenance of Cover Systems for Hazardous Waste: An Engineering Guidance Document. EPA-600/2-87-039. Hazardous Waste Engineering Research Laboratory, Cincinnati, OH.

USEPA. 1987c. Geosynthetic Design Guidance for Hazardous Waste Landfills and Surface Impoundments. EPA-600/2-87-097. Hazardous Waste Engineering Research Laboratory, Cincinnati, OH.

USEPA. 1987d. Assessment of Techniques for In-situ Repair of Flexible Membrane Liners. EPA-600/2-87-038. Hazardous Waste Engineering Research Laboratory, Cincinnati, OH.

USEPA. 1987e. Hazardous Waste Treatment, Storage and Disposal Facilities (TSDF) -- Air Emission Models. EPA-450/3-87-026. Office of Air Quality Planning and Standards, Research Triangle Park, NC.

USEPA. 1987f. Handbook: Ground Water. EPA/625/6-87/016. Robert S. Kerr Environmental Laboratory, Ada, OK.

USEPA. 1987g. Background Document on Bottom Liner Performance in Double-Lined Landfills and Surface Impoundments. EPA/530-SW-87-013. Office of Solid Waste, Washington, DC.

USEPA. 1987h. Hazardous Waste Management System: Minimum Technology Requirements. Federal Register, Vol. 52, No. 74, April 17, 1987. pp. 12566-12575.

USEPA. 1987i. Liners and Leak Detection for Hazardous Waste Land Disposal Units. Federal Register, Vol. 52, No. 103, May 29, 1987. pp. 20218-20310.

USEPA. 1988a. Lining of Waste Containment and Other Impoundment Facilities. EPA/600/2-88/052. Hazardous Waste Engineering Research Laboratory, Cincinnati, OH.

USEPA. 1988b. Design, Construction, and Evaluation of Clay Liners for Waste Management Facilities. EPA/530/SW-86/007f.

USEPA. 1988c. Guidance for Conducting Remedial Investigation and Feasibility Studies under CERCLA (Interim Final). EPA 540/G-89-004. OSWER Directive 9355.3-01. Office of Emergency and Remedial Response, Washington, DC.

USEPA. 1988d. Guide to Technical Resources for the Design of Land Disposal Facilities. EPA/625/6-88/018. Risk Reduction Engineering Laboratory, Cincinnati, OH.

USEPA. 1989a. Technical Guidance Document: Final Covers on Hazardous Waste Landfills and Surface Impoundments. EPA/530-SW-89-047. Office of Solid Waste and Emergency Response, Washington, DC. 39 pp.

USEPA. 1989b. Seminar Publication: Requirements for Hazardous Waste Landfill Design, Construction, and Closure. EPA/625/4-89/022. Center for Environmental Research Information, Cincinnati, OH. 127 pp.

USEPA. 1989c. The Fabrication of Polyethylene Flexible Membrane Liner Field Seams. EPA/530/SW-89/069. Office of Solid Waste and Emergency Response, Washington, DC. 42 pp.

USEPA. 1989d. Hazardous Waste TSDF -- Fugitive Particulate Matter Air Emissions Guidance Document. EPA/450/3-89-019. Office of Air Quality Planning and Standards, Research Triangle Park, NC.

USEPA. 1989e. Stabilization/Solidification of CERCLA and RCRA Wastes: Physical Tests, Chemical Testing Procedures, Technology Screening, and Field Activities. EPA/625/6-89/022. Center for Environmental Research Information, Cincinnait, OH. 70 pp.

U.S. Geological Survey. 1985. Quality of Water. Branch Technical Memorandum no. 85-09. Reston, VA. 26 pp.

Unterberg, W., R. W. Melvold, L. M. Flaherty, and L. T. McCarthy. 1984. Procedures for Selection of Countermeasures for Hazardous Substance Releases. In Proceedings of the Hazardous Materials Spills Conference. pp. 151-161.

Urban Drainage and Flood Control District. 1979. Urban Storm Drainage Criteria Manual, vols. 1 and 2. In Engineering Field Manual for Conservation Practices, 3rd Edition. U.S. Dept. of Agriculture, Soil Conservation Service.

Valsaraj, K. T., C. Springer, T. Nguyen, and L. J. Thibodeaux. 1985. Investigation of Floating Liquids to Control Volatile Organic Chemical (VOC) Emissions from Surface Impoundments. In Land Disposal of Hazardous Waste, Proceedings of the Eleventh Annual Research Symposium. EPA/600/9-85/013.

Van Dorn, W. G. 1953. Wind Stress on an Artificial Pond. Jour. of Marine Research, vol. 12.

Waddell, J. J. 1985. Construction Materials Ready-Reference Manual. McGraw-Hill, New York. 395 pp.

Wagner, K. and Z. Kosin. 1985. In-situ Treatment. In Proceedings of the 6th National Conference on Management of Uncontrolled Hazardous Waste Sites. Washington, DC. pp. 221-230.

Warnick, C. C. 1956. Influence of Wind on Precipitation Measurements at High Altitudes. University of Idaho Engineering Experiment Station Bulletin No. 10. 63 pp.

Whipple, W., N. S. Grigg, T. Grizzard, C. W. Randall, R. P. Shubinski, and L. S. Tucker. 1983. Stormwater Management in Urbanizing Areas. Prentice-Hall, Inc., Englewood Cliffs, NJ. 234 pp.

White, L. A., D. F. Doyle, and W. M. Kaschak. 1985. Remedial Action Planning at Hazardous Waste Sites. In Proceedings of the Sixth National Conference on Management of Uncontrolled Hazardous Waste Sites. Washington, DC. pp. 281-284.

Winter, T. C. 1981. Uncertainties in Estimating the Water Balances of Lakes. In Water Resources Bulletin, vol. 17. pp. 82-115.

Winterkorn, H. F. and H. Fang. 1975. Foundation Engineering Handbook. Van Nostrand Reinhold, New York.

Wright, S. G. 1969. A Study of Slope Stability and the Undrained Shear Strength of Clay Shales. PhD dissertation, University of California, Berkeley.

* U.S. G.P.O.:1991-548-187:41705