OSWER9360405

United States
Environmental Protection
Agency

Office of Emergency and
Remedial Response
Washington, DC 20460

PB92-963406
Publication 9360.4-05
May 1992

Superfund

EPA

Compendium of ERT Air Sampling Procedures

OSWER Directive 9360.4-05
May 1992

COMPENDIUM OF ERT AIR SAMPLING PROCEDURES

SUMMA Canister Cleaning

SUMMA Canister Sampling

GC/MS Analysis of Tenax/CMS Cartridges and SUMMA Canisters

Preparation of SUMMA Canister Field Standards

Low Level Methane Analysis for SUMMA Canister Gas Samples

Asbestos Sampling

Tedlar Bag Sampling

Charcoal Tube Sampling

Tenax Tube Sampling

Polyurethane Foam Sampling

Interim Final

Environmental Response Team
Emergency Response Division

Office of Emergency and Remedial Response
U.S. Environmental Protection Agency
Washington, DC 20460

Notice

This document has been reviewed in accordance with U.S. Environmental Protection Agency policy and approved for publication. Mention of trade names or commercial products does not constitute endorsement or recommendation for use.

The policies and procedures established in this document are intended solely for the guidance of government personnel, for use in the Superfund Removal Program. They are not intended, and cannot be relied upon, to create any rights, substantive or procedural, enforceable by any party in litigation with the United States. The Agency reserves the right to act at variance with these policies and procedures and to change them at any time without public notice.

Depending on circumstances and needs, it may not be possible or appropriate to follow these procedures exactly in all situations due to site conditions, equipment limitations, and limitations of the standard procedures. Whenever these procedures cannot be followed as written, they may be used as general guidance with any and all modifications fully documented in either QA Plans, Sampling Plans, or final reports of results.

Each Standard Operating Procedure in this compendium contains a discussion on quality assurance/quality control (QA/QC). For more information on QA/QC objectives and requirements, refer to the *Quality Assurance/Quality Control Guidance for Removal Activities*, OSWER directive 9360.4-01, EPA/540/G-90/004.

Questions, comments, and recommendations are welcomed regarding the Compendium of ERT Air Sampling Procedures. Send remarks to:

Mr. William A. Coakley
Removal Program QA Coordinator
U.S. EPA - ERT
Raritan Depot - Building 18, MS-101
2890 Woodbridge Avenue
Edison, NJ 08837-3679

For additional copies of the Compendium of ERT Air Sampling Procedures, please contact:

National Technical Information Service (NTIS)
U.S. Department of Commerce
5285 Port Royal Road
Springfield, VA 22161
(703) 487-4600

Table of Contents

List of Exhibits

Acknowledgments

Preparation of this document was directed by William A. Coakley, the Removal Program QA Coordinator of the Environmental Response Team, Emergency Response Division. Additional support was provided under U.S. EPA contract #68-03-3482 and U.S. EPA Contract #68-WO-0036.

1.0 SUMMA CANISTER CLEANING: SOP #1703

1.1 SCOPE AND APPLICATION

This procedure is intended for use when cleaning SUMMA polished stainless steel canisters. SUMMA canisters are able to sample gas-phase volatile organic compounds (VOCs) on site at concentrations of one part per billion by volume (ppbv) and greater. This cleaning procedure ensures that canisters have been sufficiently cleaned prior to sampling, to the extent that no VOC contamination is present at concentrations greater than 0.2 ppbv.

1.2 METHOD SUMMARY

After use, canisters are logged in and physically inspected. These canisters are vented to the outside air under an operating exhaust hood. Canisters are connected to a manifold which is attached to a vacuum pump via a cryogenic trap. The canisters and lines are evacuated and then the canisters are heated for a prescribed time period. During the heating period, the canisters are filled with humidified nitrogen and pressurized. Three cycles of filling and pressurizing, then evacuation and heating, are required.

Confirming that the canisters are free of VOC contamination involves pressurizing the canisters with ultrahigh purity nitrogen and analyzing on the gas chromatograph/mass spectrometer (GC/MS). If no VOC contamination is present at concentrations greater than 0.2 ppbv, the canister is considered clean. Clean canisters are leak-tested by pressurizing with nitrogen for 24 hours. Canisters that have been cleaned and found to be without leaks are evacuated. These canisters are logged as cleaned and certified and are stored in the evacuated state with brass cap fittings until needed for sampling.

1.3 SAMPLE CANISTER HANDLING AND STORAGE

1.3.1 Canister Receipt

1. Observe the overall condition of each sample canister. Any canister having physical defects requires corrective action.

2. Observe each canister for an attached sample identification number.

3. Record each canister in the dedicated laboratory logbook by its SUMMA canister number.

1.3.2 Canister Storage

1. Store canisters in an evacuated state of less than 0.05 mm Hg and with a brass cap in place. The canisters remain in this state until needed.

2. Attach an identification tag to the neck of each canister for field notes and chain-of-custody purposes.

3. Record each canister in the dedicated laboratory logbook stating the canister status and storage location. Also, note on the identification tag the date cleaned and date certified clean, as well as the initials of the operator.

1.4 INTERFERENCES AND POTENTIAL PROBLEMS

Contamination may occur in the sample canisters if they are not properly cleaned before use. All other equipment used in this process must be sufficiently clean. All gases and solvents used must be of a certified purity to avoid contamination. Canisters must be stored with the valve closed and the brass caps in place to avoid vacuum loss.

1.5 EQUIPMENT/APPARATUS

1.5.1 Canister

- sample canister -- leak-free stainless steel pressure vessels of desired volume (e.g., 6-L), with valve and SUMMA passivated interior surfaces or equivalent.

Although there maybe other sources, two readily available sources are Scientific Instrumentation Specialists, Inc., P.O. Box 8941, Moscow, ID, 83843; or Andersen Samplers, Inc., 4215-C Wendell Dr., Atlanta, GA, 30315.

1.5.2 Canister Cleaning System

Figure 1 in Appendix A displays the canister cleaning system.

- vacuum pump -- capable of evacuating sample canister(s) to an absolute pressure of <0.05 mm Hg.
- manifold -- stainless steel manifold with connections for simultaneously cleaning several canisters.
- shutoff valve(s) -- three on/off toggle valves (Valves A, B, D).
- shutoff valve -- one variable metering valve (Valve C) to regulate flow of zero air.
- shutoff valve -- one variable metering valve (Valve E) used as an on/off valve between the nitrogen regulator and the supply line.
- stainless steel vacuum gauge -- capable of measuring vacuum in the manifold to an absolute pressure of 0.05 mm Hg or less.
- cryogenic trap -- stainless steel U-shaped open tubular trap cooled with liquid nitrogen to prevent contamination from back diffusion of oil from vacuum pump. Also, a stainless steel two-stage pressure regulator 0-690 kPa (0-100 psig) to regulate nitrogen pressure.
- Teflon tee with a septum port -- an injection port capable of introducing distilled, deionized water to provide moisture to the zero air supply line.
- isothermal oven -- a system for canisters or equivalent. Although there may be other sources, one readily available source is Fisher Scientific, Pittsburgh, PA, Model 349.

1.6 REAGENTS

- gas cylinders of nitrogen, ultrahigh purity grade.
- cylinders of liquid nitrogen, ultrahigh purity grade.
- cryogen -- liquid nitrogen (bp -195°C).
- distilled, deionized water, ultrahigh purity.

1.7 PROCEDURES

1.7.1 System Set-Up

1. Seal all connections in the vacuum system except the canisters and manifold. Check all connections, lines, and valves for leaks by pressurizing the line to 30 psig and using a soap solution. Check the septum for leaks by removing it and visually inspecting it.
2. Add the liquid nitrogen to the cryogenic trap and allow it to reach a state of equilibrium.
3. Check the pump to assure proper working order by achieving a vacuum of 0.05 mm Hg in the line that normally attaches to the manifold but is now capped. Valve A is open and Valves B, C, D, and E are closed. After the vacuum test is completed, turn the pump off and remove the cap to break the vacuum.
4. Check the oven to assure proper working order by heating the oven to 100°C and measuring the internal temperature with a thermometer.
5. Check reagents to assure proper purity.
6. Set the back pressure on the nitrogen to 30 psig.

1.7.2 Cleaning

1. Vent all canisters to the outside air under an operating exhaust hood.
2. Connect the canisters (with the valves closed on the canisters) to the manifold by the Swagelok fittings. Connect the manifold to the vacuum system by the Swagelok fitting.

3. Open Valve A, ensure Valves B, C, D, and E are closed, and start vacuum pump.

4. Once a vacuum (0.05 mm Hg) is obtained in the line and the manifold, close valve A. Examine the system for leaks by comparing the initial vacuum reading and a second vacuum reading 3 minutes later. If the vacuum deteriorates more than 5 mm Hg, a leak exists and corrective action is necessary.

5. If no leaks are observed, open valve A and the Canister 1 valve. Evacuate Canister 1 to 0.05 mm Hg, then close the Canister 1 valve. By evacuating one canister at a time, the potential for cross-contamination between canisters is minimized.

6. Evacuate all other canisters in the same manner as described in step 5.

7. After all four canisters are evacuated, open all canister valves. Turn on the oven and heat to 100°C.

8. Continue evacuating canisters for 1 hour at 100°C. Document the time.

9. After 1 hour, Valve A is closed and Valves B, C, D, and E are opened, with Valve C metering the flow of nitrogen.

10. Inject 400 μL of distilled deionized water via a syringe through the septum in the nitrogen line.

11. Allow the canisters to pressurize to 30 psig.

12. Close Valves B, C, D, and E.

13. Close canister valves.

14. Repeat steps 5 through 13, twice.

15. Close valves on canisters.

16. Close Valve A.

17. Turn off vacuum pump.

18. Disconnect manifold from cleaning system.

19. Disconnect canisters from the manifold and place a brass cap on each canister.

20. Choose one canister of this set of four that was analyzed as being the most highly contaminated previous to cleaning. Fill this canister with ultrahigh purity nitrogen air to a pressure of 30 psig.

21. Analyze the above canister for VOC contamination by GC/MS. If this canister is sufficiently clean to the extent that no VOC contamination is present at concentrations greater than 0.2 ppbv, then all canisters in that set of four are considered clean. Document the results. If it is not sufficiently clean, see step 23.

22. Evacuate the above canister again to 0.05 mm Hg, cap it with a brass fitting, and store it with the other three of the lot. Document the location.

23. If the above canister is not sufficiently clean (i.e., VOC contamination is present at concentrations greater than 0.2 ppbv), then all canisters in that lot must be cleaned again until the canisters meet the prescribed criteria. Document the results.

1.7.3 Leak-Testing

1. Once the canister lot is determined to be clean, the canisters are pressurized to 30 psig with nitrogen.

2. The initial pressure is measured, the canister valve is closed, and the brass cap is replaced. Document the time and pressure.

3. After 24 hours, the final pressure is checked. Document the time and pressure.

4. If leak-proof, the pressure should not vary more than +13.8 kPa (± 2 psig) over the 24-hour period. If this criterion is met, the canister is capped with a brass fitting and stored. If a leak is present, corrective action is required. Document the results.

1.8 CALCULATIONS

There are no calculations for this SOP.

1.9 QUALITY ASSURANCE/ QUALITY CONTROL

The following specific quality assurance/quality control procedures are applicable for SUMMA canister cleaning:

1. Check all connections, lines, and valves to ensure no leaks are present.

2. Check the septum to ensure no leaks are present, by removing the septum and visually examining it.

3. Check the pump to ensure proper working order by achieving a vacuum of 0.05 mm Hg prior to cleaning.

4. Check the oven to ensure proper working order by comparing the oven setting at 100°C to the internal temperature with a thermometer.

5. Check the reagents to ensure sufficient purity.

6. Evacuate all canisters to 0.05 mm Hg during each cycle of the cleaning process and document the results.

7. Evacuate all canisters at 100°C for 1 hour during each cycle of the cleaning process. Document the results.

8. Evacuate, heat, and pressurize all canisters three times during the cleaning process. Document each cycle.

9. For the canister lot to be considered cleaned, the selected canister from the cleaning lot to be tested must be analyzed by GC/MS and shown to be sufficiently cleaned to the extent that no VOC contamination is present at concentrations greater than 0.2 ppbv. If the VOC contamination is greater than 0.2 ppbv, the canister lot must be cleaned again. In either case, document the results.

10. Leak-test all canisters for 24 hours and document the results.

11. Store and evacuate all canisters, and cap them with a brass fitting. Document the pressure and location of all canisters.

1.10 DATA VALIDATION

This section is not applicable to this SOP.

1.11 HEALTH AND SAFETY

When working with potentially hazardous materials, follow U.S. EPA, OSHA, and site-specific safety practices. More specifically:

- Liquid nitrogen is used to cool the cryogenic trap. Its boiling point is -196°C. Insulated gloves, lab coat, face shield, and safety glasses must be worn when using this material. Liquid nitrogen must be transported only in properly constructed containers.

- Ultrahigh purity nitrogen is used to clean the canisters and must be labeled properly. All cylinders must be securely fastened to a stationary object. The cylinder valve should only be opened by hand. The proper regulator must be used and set correctly.

- The oven is set to a temperature of 100°C. Insulated gloves should be worn when handling items heated to this temperature.

- Prior to cleaning, canisters are to be vented to the atmosphere under an operating exhaust hood. The hood must be in proper working order.

- Canisters are pressurized during the cleaning operation. No canister is to be pressurized above 30 psig. The maximum pressure limit for the SUMMA canisters is 40 psig.

2.0 SUMMA CANISTER SAMPLING: SOP #1704

2.1 SCOPE AND APPLICATION

The purpose of this Standard Operating Procedure (SOP) is to describe a procedure for sampling of volatile organic compounds (VOCs) in ambient air. The samples are collected as whole air samples in passivated SUMMA stainless steel canisters. The VOCs are subsequently separated by gas chromatography (GC) and measured by mass-selective detector or multidetector techniques. This SOP describes procedures for sampling with canisters at final pressures both above atmospheric pressure (referred to as pressurized sampling) and below atmospheric pressure (referred to as subatmospheric pressure sampling).

This method is applicable to specific VOCs that have been tested and determined to be stable when stored in pressurized and subatmospheric pressure canisters. The organic compounds that have been successfully collected in pressurized canisters by this method are listed in table 1, Volatile Organic Compound Data. These compounds have been measured at the parts per billion by volume (ppbv) level.

2.2 METHOD SUMMARY

Both pressurized and subatmospheric pressure sampling modes use an initially evacuated canister. Both modes may also use a mass flow controller/sample pump arrangement, fixed orifice, capillary, or adjustable micrometering valve to regulate flow. With this configuration, a sample of ambient air is drawn through a sampling train comprised of components that regulate the rate and duration of sampling into a pre-evacuated passivated SUMMA canister.

2.3 SAMPLE PRESERVATION, CONTAINERS, HANDLING, AND STORAGE

After the air sample is collected, the canister's valve is closed, an identification tag is attached to the canister, and the canister is transported to a laboratory for analysis. Upon receipt at the laboratory, the canister tag data are recorded. Sample holding and expiration times should be determined prior to initiating field activities.

2.4 INTERFERENCES AND POTENTIAL PROBLEMS

Contamination may occur in the sampling system if canisters are not properly cleaned before use. Additionally, all other sampling equipment (e.g., pump and flow controllers) should be thoroughly cleaned. Instructions for cleaning the SUMMA canisters are described in ERT SOP #1703, SUMMA Canister Cleaning.

2.5 EQUIPMENT/APPARATUS

See figure 2 for a diagram of pressurized and subatmospheric canister sampling systems.

2.5.1 Subatmospheric Pressure Sampling Equipment

- VOC canister sampler -- whole air sampler capable of filling an initially evacuated canister by action of the flow control from near 30 inches of mercury (Hg) vacuum to near atmospheric pressure (such as Andersen Samplers, Inc., NuTech, Scientific Instrumentation Specialists (SIS), or homemade subatmospheric canister samplers).

- sampling inlet line -- stainless steel tubing to connect the sampler to the sample inlet.

- sample canister (6-liter size) -- leak-free stainless steel pressure vessels of desired volume with valve and SUMMA passivated interior surfaces (SIS, Andersen Samplers, Inc., or equivalent).

- particulate matter filter -- 2-μm sintered stainless steel in-line filter (Nupro Co., Model SS-2F-K4-2, or equivalent).

- chromatographic-grade stainless steel

Table 1: Volatile Organic Compound Data Sheet

Compound Name (synonym)	Formula	Molecular Weight	Boiling Point (°C)	Melting Point (°C)	CAS Number
Freon 12 (dichlorodifluoromethane)	Cl_2CF_2	120.91	-29.8	-158.0	------
methyl chloride (chloromethane)	CH_3Cl	50.49	-24.2	-97.1	74-87-3
Freon 114 (1,2-dichloro-1,1,2,2-tetrafluoroethane)	$ClCF_2CClF_2$	170.93	4.1	-94.0	------
vinyl chloride (chloroethylene)	$CH_2=CHCl$	62.50	-13.4	-1538.0	75-01-4
methyl bromide (bromomethane)	CH_3Br	94.94	3.6	-93.6	74-83-9
ethyl chloride (chloroethane)	CH_3CH_2Cl	64.52	12.3	-136.4	75-00-3
Freon 11 (trichlorofluoromethane)	CCl_3F	137.38	23.7	-111.0	------
vinylidene chloride (1,1-dichloroethene)	$C_2H_2Cl_2$	96.95	31.7	-122.5	75-35-4
dichloromethane (methylene chloride)	CH_2Cl_2	84.94	39.8	-95.1	75-09-2
Freon 113 (1,1,2-trichloro-1,2,2-trifluoroethane)	CF_2ClCCl_2F	187.38	47.7	-36.4	------
1,1-dichloroethane (ethylidene chloride)	CH_3CHCl_2	98.96	57.3	-97.0	74-34-3
cis-1,2-dichloroethylene	$CHCl=CHCl$	96.94	60.3	-80.5	------
chloroform (trichloromethane)	$CHCl_3$	119.38	61.7	-63.5	67-66-3
1,2-dichloroethane (ethylene dichloride)	$ClCH_2CH_2Cl$	98.96	83.5	-35.3	107-06-2
methyl chloroform (1,1,1-trichloroethane)	CH_3CCl_3	133.41	74.1	-30.4	71-55-6
benzene (cyclohexatriene)	C_6H_6	78.12	80.1	5.5	71-43-2
carbon tetrachloride (tetrachloromethane)	CCl_4	153.82	76.5	-23.0	56-23-5
1,2-dichloropropane (propylene dichloride)	$CH_3CHClCH_2Cl$	112.99	96.4	-100.4	78-87-5
trichloroethylene (trichloroethene)	$ClCH=CCl_2$	131.29	87.0	-73.0	79-01-6
cis-1,3-dichloropropene (cis-1,3-dichloropropylene)	$ClCH_2CH=CHCl$	110.97	76.0	-----	------

tubing and fittings for interconnections -- all materials in contact with sample, analyte, and support gases should be chromatographic-grade stainless steel.

- fixed orifice, capillary, or adjustable micrometering valve -- used in lieu of the electronic flow controller/sample pump for grab samples or short duration time-integrated samples.

2.5.2 Pressurized Sampling Equipment

- VOC canister sampler -- whole air sampler capable of filling an initially evacuated canister by action of the flow controller and pump from near 30 inches Hg vacuum to 15-20 psi atmospheric pressure (Andersen Samplers Inc., NuTech, SIS, or equivalent pressurized canister sampling system).

- mass flowmeter/controller -- leak-free, linearly proportioned mass flowmeter/ controller unit at desired flowrate (e.g., 100 mL/min). Although there may be other sources, a mass flowmeter/controller is available from Tylan, 15 Meadowview Ln, Medford, NJ 08055.

- sampling inlet line -- stainless steel tubing to connect the sampler to the sample inlet.

- sample canister -- leak-free stainless steel pressure vessels of desired volume with valve and SUMMA passivated interior surfaces (SIS, Andersen Samplers, Inc., or equivalent).

- particulate matter filter -- 2-μm sintered stainless steel in-line filter (Nupro Co., Model SS-2F-K4-2, or equivalent).

- chromatographic-grade stainless steel tubing and fittings for interconnections -- all materials in contact with sample, analyte, and support gases should be chromatographic-grade stainless steel.

2.6 REAGENTS

This section is not applicable to this SOP.

2.7 PROCEDURES

2.7.1 Subatmospheric Pressure Sampling

1. Prior to sample collection, complete the appropriate information on the Canister Sampling Field Data Sheet (Appendix C).

2. Open a canister, which is evacuated to 28-30 inches Hg at sea level and fitted with a flow restricting device, to the atmosphere containing the VOCs to be sampled. The pressure differential causes the sample to flow into the canister. (Note: at higher elevations the vacuum may be less.) See section 2.8 to calculate the flow rate.

3. This technique may be used to collect grab samples (duration of 10 to 30 seconds) or time-integrated samples (duration of 12 to 24 hours). Sampling duration depends on the degree to which the flow is restricted. The flow will remain constant until the vacuum reads approximately 11 inches Hg. When this occurs, control the flow, either manually or automatically, to achieve constant flow.

4. After sampling is complete, record the appropriate information on the Canister Sampling Field Data Sheet.

2.7.2 Pressurized Sampling

1. Prior to sample collection, complete the appropriate information on the Canister Sampling Field Data Sheet.

2. Use a digital time-programmer to pre-select sample duration, and start and stop times.

3. Open a canister, which is evacuated to 28-30 inches Hg at sea level and connected in line with the sampler, to the atmosphere containing the VOCs to be sampled.

4. Using a direct drive blower motor assembly, draw a whole air sample into the system through a stainless steel inlet tube. (Some units do not have a blower.)

5. Using a specially modified inert sample pump in conjunction with a flow controller, pull a small portion of this whole air sample from the

inlet tube. The initially evacuated canister is filled by action of the flow controlled pump to a positive pressure not to exceed 25 psig.

6. Upon sampling completion at the location, complete the requisite information on the Canister Sampling Field Data Sheet.

2.8 CALCULATIONS

A flow control device maintains a constant flow into the canister over the desired sample period. This flow rate is determined so that the canister is filled over the desired sampling period, to 2-5 inches Hg vacuum for subatmospheric pressure sampling or to about one atmosphere (15 psi) above ambient pressure for pressurized sampling.

1. For subatmospheric sampling, the volume of the sample must be calculated before the flow rate can be determined. The sample volume can be calculated by:

$$S = V - \left(\frac{V \cdot E}{I}\right)$$

where:

S = sample volume (cm^3)
V = volume of the canister (cm^3)
I = initial canister vacuum (in. Hg)
E = estimated final vacuum (in. Hg)

For example, to calculate the sample volume of a 6-L canister with an initial canister vacuum of 28 inches Hg and an estimated final vacuum of 5 inches Hg.

$$S = 6000 - \left(\frac{6000 \cdot 5}{28}\right)$$

S = 4929 cm^3

The flow rate can be calculated by:

$$F = \frac{S}{T\ (60)}$$

where:

F = flow rate (cm^3/min or mL/min)
S = sample volume (cm^3)
T = sample period (hours)

Using a 24-hour sampling period for the above sample volume, the flow rate can be calculated as:

$$F = \frac{4929}{24 \cdot 60}$$

F = 3.42 cm^3/min

2. For pressurized sampling, only the flow rate has to be calculated.

For example, if a 6-L canister is to be filled with 12-L of sample at 2 atmospheres absolute pressure (near 30 psia) in 24 hours, the flow rate can be calculated by:

$$F = \frac{12000}{24 \cdot 60}$$

F = 8.3 cm^3/min

3. If the canister pressure is increased for analysis, a dilution factor (DF) is calculated and recorded on the sampling data sheet.

$$DF = \frac{P_f}{P_i}$$

where:

P_f = canister pressure (psig) after pressurization,
P_i = canister pressure (psig) before pressurization

After sample analysis, detected VOC concentrations are multiplied by the dilution factor to determine concentration in the sampled air.

2.9 QUALITY ASSURANCE/ QUALITY CONTROL

The following general quality assurance procedures apply:

- All data must be documented on standard chain-of-custody forms, field data sheets, or within site logbooks.
- All instrumentation must be operated in accordance with operating instructions as

supplied by the manufacturer, unless otherwise specified in the work plan. Equipment checkout and calibration activities must occur prior to sampling/operation, and they must be documented.

2.10 DATA VALIDATION

This section is not applicable to this SOP.

2.11 HEALTH AND SAFETY

When working with potentially hazardous materials, follow U.S. EPA, OSHA, and site-specific health and safety practices. More specifically, pressurizing of SUMMA canisters should be performed in a well-ventilated room, or preferably under a fume hood. Care must be taken not to exceed 40 psig in the canisters. Canisters are under pressure, albeit only 20-30 psig, and should not be dented or punctured. They should be stored in a cool, dry place and always be placed in their plastic shipping boxes during transport and storage.

3.0 GC/MS ANALYSIS OF TENAX/CMS CARTRIDGES AND SUMMA CANISTERS: SOP #1705

3.1 SCOPE AND APPLICATION

The purpose of this Standard Operating Procedure (SOP) is to describe the analysis of air samples collected on either Tenax/Carbonized Molecular Sieve (CMS) cartridges or in SUMMA canisters by Gas Chromatography/Mass Spectrometry (GC/MS). These methods are applicable to volatile organic compounds (VOCs) that can be sampled by one or both of these media. The VOCs that can be routinely analyzed at the parts per billion (ppb) level for both sample collection methods are listed in table 2.

3.2 METHOD SUMMARY

These methods involve thermal desorption of cartridges or canisters into a cryogenic trap. The trap cryofocuses the sample onto the head of the analytical column, then flash heats the sample and separates it by gas chromatography. Following separation, compounds are analyzed by a positive-ion, electron-impact, mass spectrometer.

3.2.1 Tenax/CMS Cartridges

Analysis of Tenax/CMS cartridges for toxic organics in ambient air combines methods TO1 and TO2. The cartridges contain two different sorbent media. The gas sample is drawn through a glass tube containing Tenax (a porous polymer of 2,6-diphenyl phenylene oxide, the sorbent media for TO1) and Carbonized Molecular Sieve (CMS, the sorbent media for TO2). Further information on Tenax/CMS tube sampling may be found in ERT SOP #2052, Tenax Tube Sampling.

3.2.2 SUMMA Canisters

Alternatively, air samples can be collected in passivated, 6-liter, stainless steel SUMMA canisters and analyzed according to method TO14, a procedure similar to the Tenax/CMS cartridges. Information on SUMMA canister sampling may be found in ERT SOP #1704, SUMMA Canister Sampling.

3.3 SAMPLE PRESERVATION, CONTAINERS, HANDLING, AND STORAGE

3.3.1 Tenax/CMS Cartridges

Samples collected on Tenax/CMS cartridges are placed in clean culture tubes and forwarded as soon as possible to the laboratory. The culture tubes should be labeled and sealed with Teflon tape around the cap. Samples must be accompanied by a chain-of-custody (COC) record indicating sampling locations, sample numbers, date collected, sample matrix, and sample volumes. The COC should agree with the information on the culture tube labels, and discrepancies must be noted on the COC at the time of receipt by the laboratory. In addition, any looseness of culture tube caps or any obvious physical damage or contamination (e.g., broken cartridges, condensate in the culture tubes, or discoloration of the Tenax bed), must also be recorded on the COC.

Once samples have arrived at the laboratory, they should be refrigerated until they are analyzed. Analysis of Tenax/CMS samples must be completed within the 14-day holding time specified by TO1 and TO2. The holding time begins when the sample is first drawn onto the tube (not when the sample is received by the laboratory).

3.3.2 SUMMA Canisters

Samples collected in canisters should arrive at the laboratory with the canister valve closed and the sampling port capped. An identification tag should be attached and should agree with the information on the COC.

One of the advantages of canister samples is that they do not need any refrigeration or special handling until they are analyzed. Method TO14 does not specify a holding time for canister samples.

Table 2: Compounds Analyzed in Tenax/CMS Cartridges or SUMMA Canisters

• acetone	• chloromethane	• C_{10} terpenes
• C_2-C_8 alcohols	• chlorotoluene	• 1,1,2,2-tetrachloroethane
• C_4-C_{12} alkanes	• C_5-C_{12} cycloalkanes	• tetrachloroethene (PCE)
• C_4-C_{12} alkenes	• dibromomethane	• toluene
• C_3-C_6 alkylbenzenes	• 1,1-dichloroethane	• trans-1,2-dichloroethene
• benzene	• 1,2-dichloroethane	• 1,1,1-trichloroethane
• bromochloromethane	• C_4-C_{12} dienes	• 1,1,2-trichloroethane
• bromodichloromethane	• ethylbenzene	• trichloroethene (TCE)
• p-bromofluorobenzene	• 4-methyl-2-pentanone (MIBK)	• trichlorofluoromethane
• 2-butanone (MEK)		• trichloromethane
• carbon tetrachloride	• methylene chloride	• vinyl chloride
• chlorobenzene	• napthalene	• xylenes
• chloroethane	• styrene	

3.4 INTERFERENCES AND POTENTIAL PROBLEMS

- Structural isomers having coeluting retention times and identical mass spectra will interfere with this method. The most common interference seen in these methods is between meta-xylene and para-xylene.

- Excessive moisture in Tenax/CMS samples will cause the cryotrap to freeze, restricting sample flow from the desorber oven and resulting in poor recoveries. In general, trapping efficiencies for components with boiling points greater than water are more adversely affected than those with lower boiling points. If excessive moisture is suspected, the CMS section of the cartridge should be removed prior to sample desorption. If this step is taken, the lower boiling point compounds trapped by the CMS, such as chloromethane and vinyl chloride, will not be seen in the analysis.

- Canister samples suspected of having high concentrations of carbon dioxide (such as those collected from landfills or fire plumes), cannot be directly analyzed since the carbon dioxide will collect and freeze the cryotrap. This can be avoided by adsorbing the sample on a Tenax/CMS cartridge, which does not adsorb carbon dioxide, but retains the organic contaminants.

3.5 EQUIPMENT/APPARATUS

- GC/MS -- gas chromatograph capable of sub-ambient temperature programming interfaced with a mass spectrometric detector (Hewlett Packard 5996 GC/MS equipped with Series 1000E computer and RTE-6 software, or equivalent).

- thermal desorber -- capable of a -170°C to 250°C temperature range, equipped with GC interface (Tekmar 5010 GT automatic

thermal desorption/cryofocusing unit, or equivalent).

- chromatographic column -- capillary column, 30 m x 0.32 mm, 0.25 μm film thickness, (J & W Scientific, Inc. DB-624, or Restek, Inc. RTx-5, or equivalent).

- pre-column -- capillary fused silica column, 0.5 m x 0.32 mm, with column connector (Restek, Inc., or equivalent).

- Tenax/CMS cartridges -- 150 mg Tenax 35/50 mesh and 150 mg CMS packed into 6 x 120 mm borosilicate glass tubing with Pyrex glass wool on each end and between each phase, provided in sealed glass ampoules (Supelco, Inc., or equivalent). See the EMSL SOP for Preparation of Clean Tenax Cartridges.

- canisters -- passivated 6-liter SUMMA canisters (Andersen Samplers, Inc., or equivalent).

- mass flow controller -- 0-100 mL/min, to maintain constant flow for measuring canister sample volumes (Unit Instruments, Inc., UFC-1100 with URS 100 Readout Power Supply, or equivalent).

- stainless steel vacuum/pressure gauge -- capable of measuring 0 to 50 psi (Pennwalt Corp., Wallace and Tiernan Division, Model series 1500 dial instrument, or equivalent).

- chromatographic-grade, stainless steel tubing and stainless steel plumbing fittings.

- stainless steel cylinder regulators (5) -- two-stage pressure regulators for cylinders of helium, zero air, calibration standards, and surrogate standards.

- syringes -- 2.5-10 mL, for injecting calibration and surrogate standards (Dynatech - Precision Sampling, Inc., or equivalent).

- 9.5 mm septa (Supelco, Inc. Microsep F-174, or equivalent).

- culture tubes, Pyrex and Teflon tape -- for preserving Tenax/CMS samples.

- rotameter -- 0-100 mL/min (Matheson Gas Products, Inc., or equivalent).

- cotton cloths -- 9 inch by 9 inch, for Tenax/CMS cartridge handling (Texwipe, Co., or equivalent).

- tweezers -- for inserting and removing cartridge samples from thermal desorber.

- O-rings -- Viton, 6 mm I.D., for retaining Tenax/CMS cartridges in thermal desorber (Hewlett-Packard part no. 5061-5867, or equivalent).

3.6 REAGENTS

- calibration standards -- at approximately 1 ppmv with the balance as nitrogen (Matheson Gas Products, Inc., or equivalent).

- bromochloromethane (BCM) and p-bromofluorobenzene (BFB) -- at approximately 1 ppmv in nitrogen in a separate cylinder; both compounds used as surrogate standards, BFB also used for tuning GC/MS (Scott Specialty Gases, Inc. or equivalent).

- perfluorotributylamine (PFTBA) -- for tuning the mass spectrometer (Hewlett Packard, Inc., or equivalent).

- liquid nitrogen -- for cryogenic cooling (SOS Gases, Inc., or equivalent).

- helium -- ultrahigh purity, used as carrier gas and as purge gas in the thermal desorber (Matheson Gas Products, Inc., or equivalent).

- carbon dioxide -- bone-dry, high-pressure liquid, for chromatograph oven cooling (Matheson Gas Products, Inc., or equivalent).

- compressed air -- ultrazero grade, for chromatograph oven door control (Matheson Gas Products, Inc., or equivalent).

- nitrogen -- ultrahigh purity, for pressurizing

canister samples and purging canister analysis train lines (Matheson Gas Products, Inc., or equivalent).

3.7 PROCEDURES

3.7.1 Daily GC/MS Tuning

At the beginning of each day, tune the GC/MS system to verify that acceptable performance criteria can be achieved. The mass spectrometer should first be automatically or manually tuned on perfluorotributylamine (PFTBA). PFTBA tuning is done to demonstrate that the instrument is operating properly and, upon analysis of p-bromofluorobenzene (BFB), will give a spectrum that meets the ion abundance criteria listed in EPA Method 624 (table 3).

Table 3: GC/MS Performance Criteria for p-Bromofluorobenzene (EPA Method 624)

m/z	Ion Abundance Criteria
50	15% to 40% of mass 95
75	30% to 60% of mass 95
95	Base peak, 100% relative abundance
96	5% to 9% of mass 95
173	< 2% of mass 174
174	> 50% of mass 95
175	5% to 9% of mass 174
176	95% - 101% of mass 174
177	5% to 9% of mass 176

After PFTBA tuning, BFB is analyzed to check GC column performance and is used as the GC/MS performance standard. This performance test must be passed before any samples, standards, or blanks are analyzed, and must be repeated for every twelve hours of continuous operation. A background correction mass spectrum from the performance test must satisfy the criteria set forth in U.S. EPA Method 624. If the criteria are not met, the analyst must re-tune the mass spectrometer and repeat the test until all criteria are met.

3.7.2 GC/MS Calibration

1. Initial Calibration -- Before any analysis, initially calibrate the GC/MS using standards contained in pressurized cylinders at approximately 1 ppmv in nitrogen. A list of the target compounds in the calibration standards is given in table 4, along with the ions used for quantitation. A multipoint calibration is created by injecting three to five different volumes into the thermal desorber and analyzing them in the GC/MS. Typical volumes range from 1-10 mL, corresponding to concentrations of 100 ppb to 1 ppm. Following analysis of all calibration points, a calibration report is prepared listing the average response factors and their Relative Standard Deviation (RSD), which must be less than 25% for each compound. For each compound in the calibration, the retention times and relative abundances of selected ions are stored on the hard disk of the GC/MS computer to be used for compound identification.

2. Continuing Calibration -- For each day of analysis, check the GC/MS calibration before sample analysis with a daily standard, usually at the 1-ppmv concentration. The continuing calibration is only acceptable when all compound abundances in the daily standard are ± 25% of the average response factor of the calibration curve.

3.7.3 Analysis Conditions

All samples are prepared for GC/MS analysis by using a thermal desorption/cryogenic trapping unit. The unit is equipped with a 0.25-inch by 7-inch oven chamber for desorbing samples, an internal cryogenic trap (C-1) consisting of a 0.125-inch stainless-steel tube filled with Pyrex glass beads, an eight port switching valve, and an external cryogenic trap (C-2) located just above the head of the pre-column (figure 3, appendix A). A 60-inch silcosteel transfer line connects the two cryotraps. The pre-column connects C-2 with the analytical column, and is installed to prevent the column from being exposed to the wide temperature swings that occur at the trap. After surrogates have been introduced on a sample cartridge, the sample is then thermally desorbed by heating the oven while

Table 4: Target Compounds Analyzed for Calibration

Compound	Quantitation Ions
benzene	78
bromodichloromethane	83
carbon tetrachloride	117
chloroethane	64
chloromethane	50
dibromomethane	174
1,1-dichloroethane	63
1,2-dichloroethane	62
1,1-dichloroethene	61
trans-1,2-dichloroethene	61
ethylbenzene	91
m-ethyltoluene	120
methylene chloride	84
styrene	104
1,1,2,2-tetrachloroethane	83
tetrachloroethene	166
1,1,1-trichloroethane	97
1,1,2-trichloroethane	97
trichloroethene	130
trichlorofluoromethane	101
trichloromethane	83
toluene	92
vinyl chloride	62
m-xylene	91
o-xylene	91

purging with helium.

The helium transfers the VOCs from the cartridge to the C-1 trap. The sample is then passed through a heated transfer line and cryofocused at C-2, at the front of the pre-column, where it is injected by flash heating. Table 5 summarizes typical desorber conditions. The chromatographic conditions used are those listed in table 6, as modified from U.S. EPA Method 524.2.

An example of the GC/MS Printout is found in figure 4 (appendix A), which includes target and surrogate compounds in elution order.

3.7.4 Tenax/CMS Cartridge Analysis

Handle all Tenax/CMS samples with cotton cloth or gloves and tweezers to avoid contamination. To analyze a cartridge sample, follow these steps.

1. Place the cartridge in the desorb oven, CMS side first, so that it is downflow from the Tenax. Start the thermal desorber going into the purge step. Set the flow at 20 mL/min.

2. During the purge step, inject 10 mL of a 1-ppm mixture of the surrogate standards (bromochloromethane [BCM] and p-bromofluorobenzene [BFB]), onto the Tenax side of each sample cartridge. Lower the purge flow to 5 mL/min, so that the combined flow through the cartridge does not exceed 20 mL/min.

3. After the surrogates have been introduced on the tube and the purge cycle has been completed, the first cryogenic trap (C-1) is cooled with liquid nitrogen to -160°C. At this time, remove the cartridge, turn it around, and reinsert it into the desorb oven; the Tenax side of the cartridge is now downflow of the CMS.

4. Once the tube has been inverted and C-1 has been cooled, step the thermal desorber to the desorb cycle, allowing the surrogates to desorb from the Tenax and CMS with the sample and flow directly to C-1.

5. At the end of desorb, step the desorber again, cooling the C-2 cryotrap. When C-2 is cooled, the desorber will automatically step to the transfer step, and the sample is cryofocused at C-2.

Table 5: Typical Desorber Conditions

Parameter	Value
Desorb Temperature	240° C
Desorb Time	10.0 minutes (Tenax/CMS only)
Cryotrap-1 (C-1) Temperature	- 160° C
Cryotrap-1 Desorb Temperature	250° C
Transfer (C-1 to C-2)	3.5 minutes
Cryotrap-2 (C-2) Temperature	- 160° C
Cryotrap-2 Desorb Temperature	250° C
Cryotrap-2 Desorb Time	2.0 minutes

Table 6: Chromatographic Conditions

Parameter	Value
Initial Temperature	5.0° C
Initial Time	3.0 minutes
Ramp Rate	8.0° C/minute
Final Temperature	185.0° C
Run Time	25.5 minutes

6. When transfer is complete, the sample will be injected by automatic flash heating of C-2. The analysis then follows the chromatographic conditions in table 6.

3.7.5 Canister Sample Analysis

Canister samples are usually collected at or near atmospheric pressure. To allow the sample to flow from the canister, the canister pressure must be raised above one atmosphere with ultrahigh purity nitrogen. Normally, sample pressure is doubled for ease of calculation.

1. Before attaching the canister sample, purge the pressurizing line of the apparatus with nitrogen as indicated in figure 5 (appendix A). Attach the canister sample to the pressurizing apparatus and close the regulator to the nitrogen cylinder. Open the canister valve, allow the pressure to equilibrate, and record the initial pressure (P_i) in the analysis log.

2. Open the cylinder regulator slowly so the pressure gradually increases. When the canister pressure reaches twice the P_i, close the regulator, then close the canister valve, and record the final pressure (P_f) in the analysis log.

3. Attach the canister to the analysis train at the desorb oven as shown in figure 6 (Appendix A). With the mass flow controller valve closed, open the canister valve to allow the sample to come to equilibrium in the sample train.

4. Start the thermal desorber, and step through

the purge step to the step that cools C-1. When the desorber steps to desorb, lower the flow to zero. Open the mass flow controller valve and begin timing sample flow. The controller flow rate and the desorb time needed for the sample to flow are calculated based on the sample volume required and the equations in section 3.8.

5. Close the canister valve after the precise amount of desorb time has elapsed. Close the mass flow controller valve after the analysis train pressure reaches zero.

6. Replace the desorb oven cover attached to the canister analysis train with the desorb oven cover used for Tenax/CMS samples. Raise the helium flow to 5 mL/min, and inject 10 mL of the surrogate standards while still in desorb. At the end of desorb, follow the analysis procedure in section 7.4, steps 5 and 6.

3.7.6 Analysis of Canister Samples Adsorbed on Cartridges

Canister samples are adsorbed on Tenax/CMS cartridges when the samples are suspected of containing high levels of carbon dioxide or other permanent gases that would freeze the cryotraps.

1. Follow the procedure in section 3.7.5, steps 1 and 2, for the pressurization of the canister sample.

2. Place a Tenax/CMS cartridge in the desorb oven with the CMS side in first. Attach the canister to the analysis train as shown in figure 7 (appendix A).

3. With the mass flow controller valve closed, open the canister valve to allow the sample to come to equilibrium in the sample train.

4. Start the thermal desorber into the purge step. Lower the purge flow to zero. Open the mass flow controller valve and let the desired sample volume adsorb onto the cartridge.

5. After the sample has been adsorbed, close the canister and mass flow controller valves, replace the desorb oven cover, and inject 10 mL of the surrogate standards while still in the purge step.

6. After surrogates have been spiked on the cartridge, step the desorber to cool C-1, and follow the Tenax/CMS analysis procedure in section 3.7.4, steps 3 through 6.

3.8 CALCULATIONS

Concentrations of target compounds are calculated by the GC/MS computer software. To establish concentration limits that the GC/MS can measure, limits of quantitation (LOQ) are calculated for each sample. LOQs are calculated by the following:

$$LOQ = \frac{(LCV)\ (SC)}{SV}$$

where:

LCV = lowest calibration volume
SC = standard concentration
SV = sample volume (in milliliters)

LOQ varies inversely with the sample volume, and can range from 500 ppb for a minimal sample volume of 5 mL, to as low as 0.1 ppb for a 25-L sample.

When the canister pressure is increased, the dilution factor (DF) is calculated by the following:

$$DF = \frac{P_f}{P_i}$$

where:

P_f = canister pressure (psi) after pressurization,
P_i = canister pressure (psi) before pressurization

The following equation calculates the desorb time necessary for a given sample volume and flow rate:

$$DT = \frac{(SV)\ (DF)}{FR}$$

where:

DT = desorb time (in minutes)
SV = sample volume (in milliliters)
DF = dilution factor (usually 2)
FR = flow rate (in mL/min)

For example, with a DF of 2 and a flow rate of 40 mL/min, it would take 5 minutes to desorb 100 mL of unpressurized sample (equivalent to 200 mL of pressurized sample). For larger sample volumes, it may be necessary to set the thermal desorber for

longer than 10 minutes to desorb the sample and allow time for surrogate spiking.

3.9 QUALITY ASSURANCE/ QUALITY CONTROL

The following quality assurance/quality control procedures apply:

- Two criteria must be satisfied to verify the identification of a target compound:

  -- Retention Time - A sample component's retention time (RT) must be within ± 0.50 minutes of the RT of the standard component. For reference, the standard must be run on the same day as the sample.

  -- Spectra - (1) All ions present in the standard mass spectra at a relative intensity greater than 10% (where the most abundant ion in the spectrum equals 100%) must be present in the sample spectrum. (2) The relative intensities of the ions specified above must agree within ± 20% between the sample and the reference spectra.

- The GC/MS is tuned daily for PFTBA to meet the abundance criteria for BFB as listed in U.S. EPA Method 624. The tune is adjusted when necessary.

- An acceptable three-to-five point calibration of the standards must be run before the analysis. A calibration is acceptable if the Relative Standard Deviation is <25% of the average response factors for each compound. Samples are quantitated on the average response factors of the calibration range.

- A continuing calibration standard must be run for each day of analysis. Standards are checked against the average response factors of the calibration range; if any standard component varies by greater than 25% of the average response factor, re-run the continuing calibration. If the second continuing calibration has components varying by greater than 25% of the average response factor, run a new initial calibration.

- A surrogate standard of BFB and BCM is added to all standards and samples. Percent recoveries for samples are calculated against daily standards. Recoveries should be within 70% to 130% for BFB and BCM.

- Method blanks are analyzed after a standard analysis to check for carryover, and are also necessary after analyzing samples with high levels of contamination. For Tenax/CMS samples, a method blank is an analysis of a new cartridge spiked with surrogates. For canister samples, a method blank is flowing the same volume of nitrogen as the samples into the desorber, followed by surrogate spiking. For canister samples adsorbed onto cartridges, a method blank is a volume of nitrogen equal to the sample volumes adsorbed on a cartridge, followed by surrogate spiking and analysis.

- Ten percent of all samples received are to be analyzed in replicate.

- Performance Evaluation (PE) canisters containing known concentrations of VOCs should be analyzed at least once per analysis for canister samples. The analytical procedure is the same for canister samples.

3.10 DATA VALIDATION

Review of the data generated should be conducted according to the Quality Assurance/Quality Control considerations listed in section 3.9.

3.11 HEALTH AND SAFETY

When working with potentially hazardous materials, follow U.S. EPA, OSHA, and laboratory health and safety practices.

4.0 PREPARATION OF SUMMA CANISTER FIELD STANDARDS: SOP #1706

4.1 SCOPE AND APPLICATION

This Standard Operating Procedure (SOP) describes the preparation of SUMMA canister field standards. SUMMA polished canisters are used to store calibration gas standards for transport to field sampling sites. These standards will be used for calibrating field instruments. In addition, a series of different concentrations of gas standards, or dilutions in the field of a single canister, can be used to construct calibration curves and to ascertain minimum detection limits on various field instrumentation currently used by EPA/ERT.

4.2 METHOD SUMMARY

A certified gas standard cylinder is selected and set for delivery pressure of 20-30 psig. The hoses are bled with the gas standard. Then, a clean, evacuated SUMMA canister is attached to the gas standard line and is opened and charged to 20-30 psig with the certified gas standard cylinder. The SUMMA canister is closed and the gas standard lines are removed. A "tee" with a septum is attached onto the Swagelok fitting of the SUMMA canister. The "tee" is purged with the contents of the SUMMA canister. The SUMMA canister valve is opened and samples are taken via a gas-tight syringe through the septum on the "tee." When not in use, the valve is closed. Tedlar bags can also be filled from the "tee."

4.3 SAMPLE PRESERVATION, CONTAINERS, HANDLING, AND STORAGE

Samples and gas standards can be kept several months in the SUMMA polished canisters. Care must be taken to ensure no leaks occur when the "tee" and septum are used. In addition, the needle valve on the SUMMA canister must be completely closed when not in use. When transporting and storing, the SUMMA canister is placed in a plastic shipping container. This will protect the canister from accidental punctures or dents.

4.4 INTERFERENCES AND POTENTIAL PROBLEMS

As long as the gas standards and all transfer lines are clean, no interferences are expected. The initial pressure of the SUMMA canister should be recorded after filling. In addition, the pressure should be recorded after each use. A dramatic drop in pressure (e.g., 5 psig or more) may invalidate the use of that canister.

4.5 EQUIPMENT/APPARATUS

- SUMMA canister, 6-liter total volume. While there may be other sources, two readily available sources are Cat. # 87-300, Anderson Samplers, Inc. 4215 Wendell Drive, Atlanta, GA 30376; PN # 0650, SIS, P.O. Box 8941, 815 Courtney St., Moscow, Idaho 83843.
- certified gas standard from Scott Gas, Matheson or other reliable manufacturer.
- Hamilton gas-tight syringe with Teflon-seal plugs in various sizes.
- clean Teflon tubing, 1/4-inch OD.
- Teflon Swagelok "tee," 1/4-inch OD.
- 1/4-inch Teflon Swagelok nuts and ferrules.
- 9-mm Septa, preferably Teflon backed.
- stainless steel Swagelok on/off or needle valve, 1/4-inch OD.

4.6 REAGENTS

All standards must be vapor-phase pressurized gas cylinders, certified by the manufacturer to be within ±2% accuracy, and to be National Bureau of Standards (NBS) traceable. Scott Specialty Gas or Matheson Gas can provide these standards. If field

dilution is required, a cylinder of ultrahigh purity air is required.

4.7 PROCEDURES

1. Obtain a SUMMA polished canister that has been cleaned and evacuated as per ERT SOP #1703 (SUMMA Canister Cleaning) and select a compressed-gas cylinder of a certified standard. This standard should be certified by the manufacturer to be within ±2% accuracy of the concentration level and be NBS traceable.

2. Attach a high-purity, dual-stage regulator to the standard cylinder. This must deliver 20-30 psig pressure at an accuracy of ±10% or better.

3. Attach a section of clean, unused 1/4-inch OD Teflon tubing to the Teflon "tee." The side port of the "tee" has an on/off valve or needle valve connected to it (see figure 8, appendix A).

4. Temporarily connect a vent line to the outlet port of the side valve and vent it to a fume hood or to an outside vent. The SUMMA canister charging system appears in figure 9, appendix A.

5. Open the standard cylinder to 20-30 psig at the outlet of the cylinder regulator.

6. The needle valve on the SUMMA canister is still closed at this point. Open the side valve on the "tee" and allow the standard cylinder's 1/4-inch Teflon feed lines to vent for 1 to 2 minutes.

7. Then close the valve tightly and slowly open the needle valve on the SUMMA canister. A hissing noise should be heard. Allow the canister to continue filling. Do not fill the SUMMA canister too rapidly.

8. Periodically check the pressure on the dual stage regulator attached to the standard cylinder to ensure 20-30 psig is being delivered.

9. Once the hissing stops, the canister should be filled to approximately the same pressure as that of the source line.

10. Close the needle valve on the SUMMA canister tightly.

11. Close the standard cylinder and vent the feed lines.

12. Remove the feed line from the top of the Teflon "tee."

13. Place a Swagelok back ferrule, in the inverted position, on the top of the "tee". This will provide a flat surface on which a Teflon-backed septum can be placed.

14. Place the Teflon-backed septum, Teflon side down. The septum should create a gas-tight fit once a 1/4-inch Swagelok nut is tightened onto the top of the "tee" (see figures 10 and 11, appendix A).

15. Open the needle valve on the SUMMA canister to check for leaks throughout the "tee", particularly in the septum fitting. Do this with the valve on the side of the "tee" closed.

16. Afterwards, slowly open the side valve of the "tee" and vent for 1/2 minute and re-close. The septum "tee" is now ready for sampling from the canister using a gas-tight syringe through the septum seal.

17. Close the SUMMA canister needle valve between sample taking with the gas-tight syringe.

18. Periodically, vent or flush the "tee" to provide fresh standard for sampling. The side valve can also be used, after flushing, to fill Tedlar bags with the standard from the SUMMA canister.

4.8 CALCULATIONS

The procedure for performing field dilutions of the standards from the SUMMA canisters must be documented. This allows for the recalculation of concentrations of standards if any discrepancies arise in the calibration of the field instrumentation. Simple volumetric dilutions using Hamilton gas-tight syringes are performed using Tedlar bags with ultra-high purity air as the diluent.

4.9 QUALITY ASSURANCE/ QUALITY CONTROL

The concentration levels of the certified gas standards must be recorded. The vendor typically provides the analysis of certification with each standards cylinder; a copy should be provided with the SUMMA canister.

As previously stated, the pressure of the canister along with the date and time, should be recorded at the initial filling and at the end of each use of the canister. A drop in pressure of 5-10 psig between usages may invalidate the canister for use as a calibration standard. Certification of canister cleaning and evacuation should be noted prior to filling with standards.

4.10 DATA VALIDATION

This section is not applicable to this SOP.

4.11 HEALTH AND SAFETY

Pressurizing of SUMMA canisters should be performed in a well-ventilated room, or preferably under a fume hood. Care must be taken not to exceed 40 psig in the canisters. Canisters are under pressure, albeit only 20-30 psig, and should not be dented or punctured. They should be stored in a cool, dry place and always be placed in their plastic shipping boxes during transport and storage.

5.0 LOW LEVEL METHANE ANALYSIS FOR SUMMA CANISTER GAS SAMPLES: SOP# 1708

5.1 SCOPE AND APPLICATION

This Standard Operating Procedure (SOP) is intended for use when analyzing SUMMA canister gas samples for low parts per million volume (ppmv) levels of methane.

5.2 METHOD SUMMARY

A flame ionization detector (FID) gas chromatograph (GC) is used to separate and quantitate methane in gas samples. The sample is introduced into the carrier gas as a plug and passes through a gas chromatography column, which then separates it into two peaks. The first peak is unresolved air; the second peak is resolved methane. Peak areas are used in conjunction with calibration plots for quantitative measurements. This separation is completed in 5 minutes.

5.3 SAMPLE PRESERVATION, CONTAINERS, HANDLING, AND STORAGE

Refer to U.S. EPA Method T014 concerning SUMMA canister cleaning and sample collection. In addition, refer to ERT SOP #1703, SUMMA Canister Cleaning and ERT SOP #1704, SUMMA Canister Sampling.

Canisters are stored and analyzed at room temperature.

5.4 INTERFERENCES AND POTENTIAL PROBLEMS

This section is not applicable to this SOP.

5.5 EQUIPMENT/APPARATUS

- gas chromatograph -- Varian 3400 gas chromatograph with flame ionization detector (or equivalent) capable of operating at 225°C.
- carrier gas cylinder -- ultrahigh purity helium with a two-stage regulator delivering a pressure of 90 psi.
- 1 mL and 0.1 mL precision gas-tight syringes with needles for sample introduction.
- gas chromatography column -- 10 feet by 1/4 inch stainless steel column packed with Spherocarb, 100/120 mesh (or equivalent), capable of operating at 100°C, as well as injection temperatures of 200°C.
- electronic integrator -- Spectra-Physics SP4290 integrator (or equivalent).
- septum port adaptor for SUMMA canister.
- soap film flow meter (or equivalent).

5.6 REAGENTS

- helium -- ultrahigh purity grade helium (99.9999%).
- hydrogen -- ultrahigh purity grade hydrogen (99.9999%).
- air -- ultrazero air (<0.05 ppmv total hydrocarbon).
- calibration standards (in the range of 5-100 ppmv) -- methane standards, balance air.

5.7 PROCEDURES

5.7.1 Gas Chromatograph

1. Turn the carrier gas on and adjust the flow rate to 40 mL per minute.
2. Turn the air on and adjust the flow rate to 150 mL per minute.

3. Turn the hydrogen on and adjust the flow rate to 30 mL per minute.

4. Check the flows with a soap film flow meter.

5. Ignite the flame ionization detector and allow it to equilibrate for 10 minutes.

6. Turn the integrator on and zero it before samples are introduced.

5.7.2 Calibration

1. Introduce, via 1-mL syringe, aliquots (of the same size as will be used on the sample injections) of the standard calibration gas mixtures into the gas chromatograph injector. At least one injection of each standard gas mixture is required before starting to analyze samples. Perform the very first calibration in triplicate.

2. Verify the initial calibration by injecting a complete set of at least four standards (at least five different concentrations of standards are routinely available from commercial suppliers) at the beginning of each day's analytical activities. It is suggested that each sample injection be followed systematically by a standard injection so that many injection areas are tabulated and averaged in the report.

5.7.3 Injection of Sample

1. Withdraw a 1-mL sample from the SUMMA septum port using a 1-mL gas-tight syringe.

2. Quickly inject the sample, guarding against blow-back of the plunger. Simultaneously, activate the integrator and label the sample run.

3. End the integrator run in 5 minutes and re-zero before the next analysis.

Samples analyzed above the calibrated linear range can be reanalyzed by injecting a smaller volume, or by diluting in ultrahigh purity zero air to acquire responses within the linear range. These dilutions may be done by injecting a measured volume of the sample into a Tedlar bag and adding a measured volume of zero air. For instance, 100 mL of sample measured with a gas-tight syringe, added to 900 mL of zero air, would be diluted by a factor of 10. These volumes have to be recorded and taken into account in the calculations.

5.8 CALCULATIONS

Prepare a linear standard curve of ppmv versus peak area. Calculate the sample concentrations using the formula y = mx + b; where y is the peak area, m is the slope (peak area/ppmv), b is the y intercept (peak area), and x is the concentration (ppmv).

The above equation may be rearranged to:

$$x = y - \frac{b}{m}$$

where y is measured area, corresponding to a sample injection and x is the desired methane concentration in the sample injection. If a dilution has been made then, of course, the concentration obtained must be multiplied by the ratio of the final sample volume to the initial sample volume. Most integrator packages will handle the above calculations but it is recommended that a commercial spreadsheet program be used.

5.9 QUALITY ASSURANCE/ QUALITY CONTROL

The following quality assurance/quality control procedures are applicable.

5.9.1 Precision

The precision of the method is monitored during the second lowest calibration standard from the linear curve. A control range is established for the standard using three standard deviations from the mean of 10 independent analyses. The standard is analyzed periodically (at the beginning and end of a series of samples or every 8 hours) and must respond within the range of three standard deviations for the system and data precision to be considered under control. If the results of the standard analysis are out of range, the system must be repaired and the standards rerun, or a new calibration curve must be performed.

5.9.2 Accuracy

The accuracy of the method is monitored by periodically analyzing blind performance evaluation samples. These samples should not be prepared by the same outside source which provided the calibration standards.

5.10 DATA VALIDATION

Data will be evaluated based on the information provided in section 5.9.

5.11 HEALTH AND SAFETY

When working with potentially hazardous materials, refer to U.S. EPA, OSHA and site-specific health and safety practices.

6.0 ASBESTOS SAMPLING: SOP #2015

6.1 SCOPE AND APPLICATION

The objective of this Standard Operating Procedure (SOP) is to outline a method for sampling asbestos fibers in indoor and outdoor/ambient air at hazardous waste sites.

Regulations pertaining to asbestos have been promulgated by U.S. EPA and OSHA. U.S. EPA's National Emission Standards for Hazardous Air Pollutants (NESHAP) regulates asbestos-containing waste materials. NESHAP establishes management practices and standards for the handling of asbestos and emissions from waste disposal operations (40 CFR Part 61, Subparts A and M).

Both 40 CFR 763 and its addendum provide comprehensive rules for the asbestos abatement industry. State and local regulations on these issues vary and may be more stringent than federal requirements.

The OSHA regulations in 29 CFR 1910.1001 and 29 CFR 1926.58 specify work practices and safety equipment such as respiratory protection and protective clothing for handling asbestos. Also, these regulations specify:

- The OSHA standard for an 8-hour, time-weighted average (TWA) is 0.2 fibers/cm^3 of air. This standard pertains to fibers with a length-to-width ratio of 3 to 1 with a fiber length >5 μm.

- An action level of 0.1 fibers/cm^3 (one-half the OSHA standard) is the level U.S. EPA has established at which employers must initiate such activities as air monitoring, employee training, and medical surveillance.

References to specific analytical methodologies are made throughout this document. Also, be aware that EPA is developing an Environmental Asbestos Assessment Manual. An interim draft document titled "Superfund Method for the Determination of Asbestos in Ambient Air, Part 1: Method" (May 1990) is available and recommended for use as the most current method.

6.2 METHOD SUMMARY

Asbestos has been used in many commercial products including such building materials as flooring tiles and sheet goods, paints and coatings, insulation, and roofing asphalt. These products and others may be found at hazardous waste sites hanging on overhead pipes, contained in drums, abandoned in piles, or as part of a structure. Asbestos tailing piles from mining operations can also be a source of ambient asbestos fibers.

Asbestos air sampling is conducted by drawing air through a filter at a known flow rate with a flow-controlled pump. The sample is then analyzed using Phase Contrast Microscopy (PCM) and/or Transmission Electron Microscopy (TEM).

PCM analysis is widely available and is less costly than TEM. TEM is considered the best method for identifying airborne asbestos. TEM can detect very thin fibers typically down to 0.0025 μm in diameter.

When TEM-produced data (U.S. EPA) is compared with data from PCM (NIOSH), the TEM's aspect ratio of 5 to 1 should be modified to 3 to 1.

6.2.1 Pump Calibration

In order to determine if a sampling pump is measuring the flow rate or volume of air correctly, it is necessary to calibrate the instrument. Sampling pumps should be calibrated immediately before and after each use. Preliminary calibration should be conducted using a primary calibrator such as a soap bubble type calibrator, (e.g., a Buck Calibrator, Gilibrator, or equivalent primary calibrator) with a representative filter cassette installed between the pump and the calibrator. The representative sampling cassette can be reused for calibrating other pumps that will be used for asbestos sampling. The same cassette lot used for sampling should also be used for the calibration. A sticker should be affixed to the outside of the extension cowl marked "Calibration Cassette." A rotameter can be used provided it has been recently precalibrated with a primary calibrator. Three separate constant flow calibration readings should be obtained both before and after collecting the sample. Should the flow rate change by more than 5% during the sampling

period, the average of the pre- and post-calibration rates will be used to calculate the total sample volume. Sampling pumps can be calibrated prior to coming on site so that time is saved when performing onsite calibration.

Personal sampling pumps are utilized when the flow rates are between .001 L/min to 5 L/min. Many lightweight portable pumps are capable of providing high or low volume air flow. See the manufacturer's manual for pump operation.

High-flow pumps are utilized when flow rates between 4 L/min to 16 L/min are required. High-flow pumps are used for short sampling periods to obtain the desired sample volume. ERT uses the Gilian Aircon 520. An equivalent high-flow pump can also be used.

High-flow pumps usually run on AC power and can be plugged into a nearby outlet. If an outlet is not available, then a generator should be obtained. The generator should be positioned downwind from the sampling pump. Additional voltage may be required if more than one pump is plugged into the same generator. Several electrical extension cords may be required if sampling locations are remote.

6.2.2 Outdoor/Ambient Sampling

PCM analysis may be used for outdoor/ambient air samples. When analysis shows total fiber count above the EPA action level of 0.1 fibers/cm^3 of air, then TEM can be used to identify asbestos from non-asbestos fibers. Some labs are able to perform PCM and TEM analysis on the same filter, however, this should be verified with the laboratory prior to analysis.

High-volume pumps, for the most part, are used for outdoor sampling in low dust areas. The samplers should be placed above ground level, about 4 to 5 feet high, away from obstructions that may influence air flow. Table 7 summarizes outdoor sampling locations and the rationales for their selection.

Outdoor sampling usually requires flow rates between 10 to 15 L/min with a sample volume of 1000 to 5000 liters. Record wind speed, wind direction, temperature, and pressure in a field logbook. Wind direction is particularly important when monitoring for asbestos downwind from a fixed source.

It is recommended that a meteorological station be established. If possible, sample after 2 to 3 days of dry weather and when the wind conditions are at 10 mph or greater.

6.2.3 Indoor Sampling

EPA uses PCM analysis for indoor air samples. When analysis shows total fiber count above the EPA action level of 0.1 fibers/cm^3 of air, then TEM can be used to identify asbestos from nonasbestos fibers.

Sampling pumps should be placed 4 to 5 feet above ground level, and away from obstructions that may influence air flow. The pump can be placed on a table or counter. Table 8 summarizes indoor sampling locations and the rationales for their selection.

Indoor sampling generally utilizes high-flow rates and increased sample volumes in order to obtain lower detection limits, i.e., 0.01 fibers/cm^3 of air or less (with PCM) and 0.005 structures/cm^3 or less (with TEM).

6.2.4 Aggressive Sampling

Sampling equipment at fixed locations may fail to detect the presence of asbestos fiber. Due to limited air movement, many fibers may settle out of the air onto the floor and other surfaces and may not be captured on the filter. In the past, an 8-hour sampling period was recommended to cover various air circulation conditions. A quicker and more effective way to capture asbestos fibers is to circulate the air artificially so that the fibers remain airborne during sampling. The results from this sampling option characterize the worst-case condition. This is referred to as aggressive air sampling for asbestos.

6.3 SAMPLE PRESERVATION, CONTAINERS, HANDLING, AND STORAGE

6.3.1 Filter Selection and Collection Device

Which filter and collection device to use for sample collection will depend upon which analytical methodology is utilized.

Table 7: Sampling Stations for Outdoor Sampling

Sampling Station Location	Procedure	Rationale
Upwind/Background	Collect a minimum of 2 simultaneous upwind/background samples 30° apart from the prevailing windlines	Establishes background fiber levels
Downwind	Deploy a minimum of 3 sampling stations in a 180° arc downwind from the source	Indicates if asbestos is leaving the site
Site Representative and/or Worst Case	Obtain one representative sample which shows average on-site conditions or obtain worst-case sample (optional)	Verify, continually confirm, and document selection of proper levels of worker protection

Note: More than one background station may be required if the asbestos originates from different sources.

Table 8: Sampling Stations for Indoor Sampling

Sampling Station Location	Procedure	Rationale
Indoor Sampling	• If a work site is a single room, disperse five samplers throughout the room • If the work site contains up to five rooms, place at least one sampler in each room • If the work site contains more than five rooms, select a representative sample of the rooms	Establishes representative samples from a homogeneous area
Upwind/Background	If outside sources are suspected, deploy a minimum of two simultaneous upwind/background samples 30° apart from the prevailing windlines	Establishes whether indoor asbestos concentrations are coming from an outside source
Worst Case	Obtain one worst-case sample by aggressive sampling (optional)	Verify, continually confirm, and document selection of proper levels of worker protection

- NIOSH Method 7400: Phase Contrast Microscopy involves using a 0.8 to 1.2 μm cellulose ester membrane, 25-mm diameter, 50-mm conductive cowl on cassette (figure 12, appendix A).

- U.S. EPA Transmission Electron Microscopy involves using a 25-mm filter cassette with either a polycarbonate filter having a pore size <0.4 μm or mixed cellulose ester filter (MCE) having a pore size <0.45 μm. This cassette includes an extension cowl, a 5.0 μm MCE backup filter to serve as a diffuser, and a support pad (figure 13, appendix A).

6.3.2 Sample Handling Procedures

1. Place a sample label on the cassette with a unique sampling number. Do not put sampling cassettes in your shirt or coat pockets as the filter can pick up fibers. ERT uses the original cassette box to hold the samples.

2. Wrap the cassette individually in a plastic sample bag. Mark each bag to indicate sample identification number, total volume, and date.

3. The wrapped sampling cassettes should be placed upright in a rigid container so that the cassette cap is on top and cassette base is at the bottom. Use enough packing material to prevent jostling or damage. If possible, hand carry to laboratory.

4. Provide appropriate documentation with samples (e.g., chain-of-custody form and requested analytical methodology).

5. Follow all QA/QC requirements from the lab as well as from the PCM/TEM analytical methodology (e.g., field blank and lot blank requirements).

6.4 INTERFERENCES AND POTENTIAL PROBLEMS

Flow rates should not exceed 16 L/min due to the possibility of asbestos fiber disintegration upon contact with the filter.

6.4.1 NIOSH Method 7400, PCM

- PCM cannot always distinguish asbestos from non-asbestos fibers. All particles meeting the counting criteria are counted as total asbestos fibers.

- Fibers less than 0.25 μm in length will not be detected by this method.

- High levels of non-fibrous dust particles may obscure fibers in the field of view and increase the detection limit.

6.4.2 U.S. EPA's TEM Method

- High concentrations of background dust interfere with fiber identification.

6.5 EQUIPMENT/APPARATUS

6.5.1 Personal Sampling Pump

- personal sampling pump (e.g., Gilian Personal Sampler)
- inert tubing with glass cyclone and hose barb
- sampling cassettes with conductive cowl.
- appropriate membrane filters.
- rotameters
- whirlbags for cassettes
- tools -- small screw drivers
- sample labels
- air data sheets
- container -- to keep samples upright

6.5.2 High-Flow Pump

- high-flow pump (e.g., Gilian Aircon)
- generator or electrical outlet
- extension cords
- rotameters
- inert tubing -- unless provided with pump
- sampling cassettes with conductive cowl
- appropriate membrane filters
- whirlbags for cassettes
- sample labels
- air data sheets
- container -- to keep samples upright

6.6 REAGENTS

This section is not applicable to this SOP.

6.7 PROCEDURES

6.7.1 Preparation

1. Determine the extent of the sampling effort, the sampling methods to be employed, and what supplies and equipment are needed.

2. Obtain necessary sampling and monitoring equipment.

3. Decontaminate or preclean equipment, and ensure that it is in working order.

4. Prepare schedules, and coordinate with staff, client, and regulatory agency, as appropriate.

5. Perform a general site survey prior to entry in accordance with the site-specific health and safety plan.

6. Use stakes or flagging to identify and mark all sampling locations.

6.7.2 Aggressive Sampling

1. Before starting the sampling pumps, direct forced air (such as a 1-horsepower leaf blower or large fan) against walls, ceilings, floors, ledges, and other surfaces in the room to initially dislodge fibers from surfaces. This should last at least 5 minutes per 1000 square feet of floor.

2. Place a 20-inch fan in the center of the room. (Use one fan per 10,000 cubic feet of room space.) Place the fan on slow speed and point it toward the ceiling.

3. Start the sampling pumps and sample for the required time.

4. Turn off the pump and then the fan(s) when sampling is complete.

6.7.3 Personal Sampling Pump

1. Charge the unit for the maximum required time as indicated in the manufacturer's manual.

2. In the clean zone of the site, follow the calibration procedures in section 6.9.1 to 6.9.3.

3. Mobilize to the sampling location.

4. To set up the sampling train, attach one end of the polyvinyl chloride (PVC) tubing (approximately 2 feet) to the cassette base; attach the other end of the tubing to the inlet plug on the pump (figure 14, appendix A). The attachment between the cassette base and the tubing can best be achieved by using a hose barb with a cyclone clip.

5. Place the sampling pump 6 feet above ground level (in the breathing zone) and in an area that will not be affected by unusual air flow. The sampling pump and cassette can be placed on a sturdy structure, attached to a dowel rod or hooked to an object.

6. Remove the cassette cap from the extension cowl (open faced) and orient the cassette perpendicular to the wind.

7. Adjust the time on the pump. If the pump is programmable, turn past the zero mark before setting the actual time.

8. Turn the pump on.

9. Record the following in the site logbook: date, time, location (area or room), sample identification number, pump number, flow rate and desired total sampling time.

10. Record weather data (e.g. ambient temperature, wind direction, windspeed, precipitation).

11. Check the pump at midpoint of the sampling period if longer than 4 hours.

12. If a filter darkens in appearance or if loose dust is seen in the filter, a second sample should be started.

13. At the end of the sampling period, check the fault button to obtain pump sampling time. (This indicates whether or not the pump ran the full programmable timespan). Be sure to orient the cassette in an upright position to prevent fibers from falling from the filter when the vacuum is released.

14. Record the pump run time (finish time minus start time).

15. Perform post-calibration procedures as shown in section 6.9.

16. Record the post-flow rate in a field logbook.

17. Remove the PVC tubing from the sampling cassette. While holding the cassette upright, replace the inlet plug on the cassette cap.

18. Place the outlet plug on the cassette base.

19. Refer to section 6.3.2, steps 1-5 for sample handling procedures.

6.7.4 High-Flow Pump

The following instructions are for a Gilian Aircon 520 Constant High-Flow Air Sampler and is used for illustrative purposes; an equivalent high-flow pump can be used instead.

1. Once on site, perform the calibration in the clean zone. The calibration procedures for personal sampling pumps listed in section 6.9.1 are also applicable to high volume sampling pumps.

2. After calibrating the high volume sampler, mobilize to the sampling location.

3. To set up the sampling train, attach the air intake hose to the cassette base. Remove the cassette cap. The cassette should be positioned perpendicular to the wind (figure 15, appendix A).

4. Turn the generator on. The generator should be placed 10 feet downwind from the sampling pump.

5. Record the pump's cumulative time (if applicable).

6. Record the following in a field logbook: date, time, location, sample identification number, pump number, flow rate, and cumulative time.

7. Record weather: wind speed, ambient temperature, wind direction, and precipitation.

8. Turn the pump on.

9. Check the pump at sampling midpoint if longer than 4 hours.

10. At the end of the sampling period, orient the cassette up, and turn the pump off.

11. Record the cumulative time (if applicable).

12. Check the flow rate as shown in section 6.9. The sampling cap is replaced before calibrating.

13. Record the post-flow rate.

14. Remove the tubing from the sampling cassette. Still holding the cassette upright, replace the inlet plug on the cassette cap and the outlet plug on the cassette base.

15. Refer to section 6.3.2, steps 1 to 5, for sample handling procedures.

6.7.5 Calibration

An electronic calibrator is used for calibrating rotameters and pumps. Refer to section 6.9.1 to 6.9.3 for calibration procedures.

6.8 CALCULATIONS

The sampling volumes are determined on the basis of how many fibers need to be collected for reliable measurements. Therefore, one must estimate how many airborne fibers may be in the sampling location.

Since the concentration of airborne aerosol contaminants will have some effect on the sample, table 9 contains suggested criteria to assist in selecting a flow rate based on real-time aerosol monitor readings in mg/m^3.

PCM utilizes flow rates between 0.5 L/min and 16 L/min. The sampling time is adjusted to obtain optimum fiber loading on the filter. A sampling rate of 1 to 4 L/min for 8 hours is appropriate in non-dusty atmospheres containing 0.1 $fibers/cm^3$. Dusty atmospheres (areas with high levels of asbestos) require smaller sample volumes (<400 L) to obtain countable samples. In such cases, take short, consecutive samples and average the results over the total collection time. For documenting episodic exposures, use high-flow rates (7 to 17 L/min) over shorter sampling times. In relatively

clean atmospheres where targeted fiber concentrations are much less than 0.1 fibers/cm^3, use larger sample volumes (3,000 to 10,000 L) to achieve quantifiable loadings. Take care, however, not to overload the filter with background dust. If more than 50% of the filter surface is covered with particles, the filter may be too overloaded to count and will bias the measured fiber concentration. Do not exceed 0.5 mg total dust loading on the filter.

U.S. EPA's TEM method requires a minimum volume of 560 L and a maximum volume of 3,800 L in order to obtain an analytical sensitivity of 0.005 structures/cm^3. The optimal volume for TEM is 1200 L to 1800 L. These volumes are determined using a 200 mesh EM grid opening with a 25-mm filter cassette. Changes in volume would be necessary if a 37-mm filter cassette is used since the effective area of a 25-mm (385 mm^2) and a 37-mm (855 mm^2) filter differ.

6.9 QUALITY ASSURANCE/ QUALITY CONTROL

Follow all QA/QC requirements listed in the analytical method.

Generally field blanks are required for each set of samples or 10% of the total samples, whichever is greater.

The laboratory analyzing the samples should determine the lot blank requirements. There should be no less than one lot blank per cassette lot. It is preferable to have the lot blank analyzed prior to sampling.

6.9.1 Electronic Calibration -- Personal Sampling Pump

1. See the manufacturer's manual for operational instructions.

2. Set up the calibration train (as shown in figure 16, appendix A) using a sampling pump, electronic calibrator, and a representative filter cassette. The same lot sampling cassette used for sampling should also be used for calibrating.

3. To set up the calibration train, attach one end of the PVC tubing (approximately 60 cm or 2 feet) to the cassette base; attach the other end of the tubing to the inlet plug on the pump. Another piece of tubing is attached from the cassette cap to the electronic calibrator.

4. Turn the electronic calibrator and sampling pump on. Create a bubble at the bottom of the flow chamber by pressing the bubble initiate button. The bubble should rise to the top of the flow chamber. After the bubble runs its course, the flow rate is shown on the LED display.

5. Turn the flow adjust screw or knob on the pump until the desired flow rate is attained.

6. Perform the calibration three times until the desired flow rate of ±5% is attained.

6.9.2 Electronic Calibration -- Rotameter

1. See the manufacturer's manual for operational instructions.

Table 9: Asbestos Sampling Flow Rates

	Concentration	Flow Rate
Low real-time monitor readings	< 6.0 mg/m^3	11 - 15 L/min
Medium real-time monitor readings	> 6.0 mg/m^3	7.5 L/min
High real-time monitor readings	> 10.0 mg/m^3	2.5 L/min

2. Set up the calibration train (as shown in figure 17, appendix A) using a sampling pump, rotameter, and electronic calibrator.

3. Assemble the base of the flow meter with the screw provided and tighten in place. The flow meter should be mounted within 6° of the vertical position.

4. Turn the electronic calibrator and sampling pump on.

5. Create a bubble at the bottom of the flow chamber by pressing the bubble initiate button. The bubble should rise to the top of the flow chamber. After the bubble runs its course, the flow rate is shown on the LED display.

6. Turn the flow adjust screw or knob on the pump until the desired flow rate is attained.

7. Record the electronic calibrator flow rate reading and the corresponding rotameter reading. Indicate these values on the rotameter (sticker). The rotameter should be able to work within the desired flow range.

8. Perform the calibration three times until the desired flow rate of ±5% is attained.

Once on site, a secondary calibrator, such as a rotameter, may be used to calibrate sampling pumps.

6.9.3 Sampling Pump Calibration -- Rotameter

1. See the manufacturer's manual for Rotameter's Operational Instructions.

2. Set up the calibration train as shown in (figure 18, appendix A) using a rotameter, sampling pump, and a representative sampling cassette.

3. To set up the calibration train, attach one end of the PVC tubing (approximately 60 cm or 2 feet) to the cassette base; attach the other end of the tubing to the inlet plug on the pump. Another piece of tubing is attached from the cassette cap to the rotameter.

4. Assemble the base of the flow meter with the screw provided and tighten in place. The flow meter should be mounted within 6° of the vertical position.

5. Turn the sampling pump on.

6. Turn the flow adjust screw (or knob) on the personal sampling pump until the float ball on the rotameter is lined up with the precalibrated flow rate value. A sticker on the rotameter should indicate this value.

7. A verification of calibration is generally performed on site in the clean zone immediately prior to the sampling.

6.10 DATA VALIDATION

PCM analysis does not distinguish between asbestos and non-asbestos fibers; all fibers meeting the criteria are counted. TEM analysis can distinguish asbestos from non-asbestos fibers. This method of analysis should be used when the total fiber count is above the action level (or level of concern) so as to determine whether the airborne fiber is of asbestos origin.

Note: The flow rate and time should be adjusted to obtain optimum fiber loading on the filter.

6.11 HEALTH AND SAFETY

When working with potentially hazardous materials, follow U.S. EPA, OSHA, and site-specific health and safety procedures. More specifically, when entering an unknown situation involving asbestos, a powered air purifying respirator (PAPR) (full face-piece) is necessary in conjunction with HEPA filter cartridges. See applicable regulations for action level, PEL, TLV, etc. If previous sampling indicates asbestos concentrations are below personal health and safety levels, then Level D personal protection is adequate.

7.0 TEDLAR BAG SAMPLING: SOP #2050

7.1 SCOPE AND APPLICATION

The purpose of this Standard Operating Procedure (SOP) is to define the use of Tedlar bags in collecting gaseous samples. Tedlar bags are used to collect both volatile and semi-volatile organic compounds, including halogenated and non-halogenated species. The sensitivity of the method is primarily instrument dependent.

7.2 METHOD SUMMARY

When collecting gaseous samples for analysis, it is often necessary to obtain a representative grab sample of the medium in question. The Tedlar bag collection system (see figure 19 in appendix A) allows for this and consists of the following items.

- Tedlar bag complete with necessary fittings
- desiccator in which the vacuum is created
- sampling pump to create the necessary vacuum
- appropriate Teflon and Tygon tubing

The Tedlar bag is placed into the desiccator and the fitting is inserted into Teflon tubing. The Teflon tubing is the path through which the gaseous medium will travel. The pump is attached to the Tygon tubing, which is part of the vacuum fitting on the desiccator. The pump evacuates the air in the desiccator, creating a pressure differential causing the sample to be drawn into the bag. The sample introduced into the Tedlar bag never passes through the pump. The flow rate for the pump must be defined prior to sampling (usually 3 L/min for bag sampling).

7.3 SAMPLE PRESERVATION, CONTAINERS, HANDLING, AND STORAGE

The Tedlar bags most commonly used for sampling have a 1-liter volume, and are held in boxes of ten. When the sampling procedure is concluded, the Tedlar bags are stored in either a clean cooler or a trash bag to prevent photodegradation. It is essential that samples be analyzed within 48 hours, as after that time compounds may escape or become altered.

7.4 INTERFERENCES AND POTENTIAL PROBLEMS

Contamination is a major concern since many of the compounds in question will be present in the parts per billion range. The following practices will minimize the risk of cross-contamination.

- During transportation and storage, the further away from the source(s) of potential contamination the bags are, the less likely are the chances for external contamination.

- Bags must be attached only to clean Teflon tubing.

- Once the sample has been collected, affix the sample label to the edge of the bag to prevent adhesives on the label from permeating the body of the bag. Fill out labels with a ballpoint pen or a pencil, since permanent markers contain volatile compounds that may contaminate the sample.

- The chemical structure of Tedlar will cause highly polar compounds to adhere to the inner surface of the bag. Also, low molecular weight compounds may permeate the bag. Use real-time monitors such as the OVA, HNU, and CGI as a screening device prior to sampling. Write this information on the sample label to inform the individuals performing the sample analysis.

The Tedlar bag sampling system is straightforward and easy to use. However, be aware of the following when sampling.

- Ensure that the seal between the top half and the bottom half of the desiccator is air tight in order for the system to work.

- Check the O-ring gasket to see if it is in

place with the proper fit. O-rings that have been stretched out will not remain in place, requiring constant realignment.

- Check that all the fittings associated with the vacuum joints are securely in place. The fittings can be pushed loose when inserting the valve stem into the Teflon tubing.

- Check to ensure that a corner of the Tedlar bag is not jutting out between the two halves of the desiccator, thus impairing the seal.

- Be sure not to overinflate the bags. Overinflation will cause the bags to burst.

7.5 EQUIPMENT/APPARATUS

- Pelican cases, or desiccators -- cleaned, with Teflon tubing replaced, and equipped with extra O-rings.

- pump(s) -- charged, in good working order, and set with the appropriate flow rate of 3-L per minute.

- Tedlar bags -- free of visible contamination and preferably new.

7.6 REAGENTS

This section is not applicable to this SOP.

7.7 PROCEDURES

7.7.1 Preparation

1. Determine the extent of the sampling effort, the sampling methods to be employed, and which equipment and supplies are needed.

2. Obtain necessary sampling and monitoring equipment.

3. Decontaminate or preclean equipment, and ensure that it is in working order.

4. Prepare a schedule. Coordinate with staff, clients, and regulatory agency, if appropriate.

5. Perform a general site survey prior to site entry in accordance with the site-specific health and safety plan.

6. Use stakes, flagging, or buoys to identify and mark all sampling locations. If required, the proposed locations may be adjusted based on site access, property boundaries, and surface obstructions.

7.7.2 Field Operation

Tedlar bags are stored in boxes of 10. The valve is in the open position when stored. Occasionally, a piece of debris will clog the valve, necessitating the closing of the valve stem for it to clear. The valve stem is closed by pulling the stem out. If the valve stem is difficult to pull, it helps to twist the valve stem simultaneously.

1. Remove the Tedlar bag from the carton.

2. Insert the valve stem into the Teflon tube which runs through the desiccator.

3. Seal the desiccator by applying pressure to the top and bottom (ensure that the "O" ring is in place and unobstructed).

4. Connect the sampling pump to the evacuation tube.

5. Connect the intake tube to the desired source by placing the intake tube into the medium of concern.

6. Turn on the sampling pump.

7. Allow the bag to fill (indicated by the look of the bag as well as by the sound of the laboring pump).

8. Turn off the sampling pump and remove the evacuation tube from the pump.

9. Remove bag and pull the valve stem out.

10. Lock the valve stem.

11. Label the bag using either a tag or a sticker. Do not write on the bag itself.

12. Place Tedlar bag in a clean cooler or opaque trash bag to prevent photodegradation.

7.7.3 Post Operation

1. Once the samples are collected, transfer bags to the laboratory for analysis.

2. When transferring the Tedlar bags, a chain-of-custody form must accompany the samples. Personnel should be aware that some of the compounds of concern will degrade within a few hours of sampling.

3. Samples shipped must be in a clean cooler with a trip blank (a Tedlar bag filled with zero air) and a copy of the chain-of-custody form.

7.8 CALCULATIONS

This section is not applicable to this SOP.

7.9 QUALITY ASSURANCE/ QUALITY CONTROL

Depending upon the Quality Assurance Work Plan (QAWP) requirements, collect background samples consisting of upgradient/downgradient samples, or beginning/end of day samples, or a combination of the two. It may also be desirable to change sample train tubing between sample locations. Tedlar bag standards must be filled on site to identify the contaminants' degradation from the time the sample is collected until analysis. Tedlar bags filled with zero air must also accompany the sample bags to identify possible contamination during shipment and handling.

7.10 DATA VALIDATION

Results of the quality control samples (field and lot blanks) will be evaluated for contamination. This information will be utilized to qualify the environmental sample results according to the projects' data quality objectives.

7.11 HEALTH AND SAFETY

When working with potentially hazardous materials follow U.S. EPA, OSHA, and site-specific health and safety procedures.

8.0 CHARCOAL TUBE SAMPLING: SOP #2051

8.1 SCOPE AND APPLICATION

Charcoal tube sampling is utilized to identify specific contaminants in ambient air. The greatest selectivity of charcoal (activated carbon) is towards non-polar, organic, solvent vapors, (e.g., carbon tetrachloride, chlorobenzene and toluene). Organic compounds that are gaseous at room temperature, reactive, polar, or oxygenated (aldehyde alcohols and some ketones) are either not adsorbed (relatively early breakthrough), or inefficiently desorbed.

8.2 METHOD SUMMARY

Charcoal tube sampling is performed by drawing a known volume of air through a charcoal adsorption tube. As air is drawn through the tube, gases and vapors adsorb onto the surface of the charcoal. After sampling, the tubes are delivered to the laboratory for analysis.

8.3 SAMPLE PRESERVATION, CONTAINERS, HANDLING, AND STORAGE

Charcoal used for sampling is housed in a glass tube that has been flame sealed. Charcoal tubes most often used contain either 150 mg or 600 mg of charcoal. The smaller 150-mg tube is 7-cm long with a 6-mm ID and a 4-mm OD containing two sections of 20/40 mesh activated carbon separated by urethane foam. The adsorbing section contains 100 mg of charcoal, the backup section 50 mg of charcoal. The larger 600-mg tube is 11-cm long with a 8-mm ID and a 6-mm OD containing two sections of 20/40 mesh activated carbon separated by urethane foam. The adsorbing section contains 400 mg of charcoal, the backup section contains 200 mg of charcoal. The larger tube can provide greater sensitivity by using a greater volume of air.

To preserve and store samples:

1. Place plastic caps on the charcoal tube ends.

2. Place the sample in a whirl bag. If duplicate samples have been collected, place both tubes in one whirl bag.

3. Indicate all applicable information on the chain-of-custody form, (e.g., sample volume, ID#, location, date, and weather parameters).

4. If the sample tube must be stored for more than a week, refrigeration is recommended. Maximum recommended holding time is two weeks.

5. Provide the name(s) of the analytical methodology(ies) being requested with the sample to the lab.

8.4 INTERFERENCES AND POTENTIAL PROBLEMS

High temperature and humidity, and high sampling flow rates may cause a decrease in the adsorption capacity of activated carbon. Contaminants from the front portion of the tube may migrate to the back portion of the tube. Refrigeration may minimize this migration.

8.5 EQUIPMENT/APPARATUS

8.5.1 Equipment List

- personal sampling pump
- dowel rods
- single or dual rotameter with stand and desired precalibrated flow rate
- charcoal tubes (600 mg or 150 mg)
- flexible PVC tubing (for attaching the tube holder system to the suction side of the pump)
- universal tube holder system
- sleeves (or support tubes to hold tubes in place)
- single or dual manifold flow controller
- tube holder end (tube holder ends support and seal the sampling tube within the plastic housing)
- glass cracker
- Ziploc bag

- whirl bags
- plastic caps

8.5.2 Equipment Source

While there may be other sources, tubes are readily available from SKC, Inc., and from Mine Safety Appliance Co., both of Pittsburgh, PA.

SKC: 1-800-752-8472
Mine Safety Appliance Co.: 1-800-MSA-2222

8.6 REAGENTS

This procedure utilizes totally dedicated equipment and does not require reagents.

8.7 PROCEDURES

8.7.1 Calibration

To save time in the field, sampling pumps can be precalibrated in the office prior to arriving at the site. The calibration must be checked in the field before and after sampling.

Assemble the calibration train as shown in figure 20 (appendix A), using a rotameter, sampling pump, manifold (low flow only) and representative charcoal tube. Use the same lot number of charcoal tubes for both sampling and calibrating.

1. Depending on the flow rate, adjust the sampling pump to the low- or high-flow mode (high flow > 750 cm^3/min).

2. For low flow calibration, turn the flow adjust screw on the manifold until the float ball on the rotameter is aligned with the precalibrated flow rate value. A sticker on the rotameter should indicate this value.

3. Affix a sticker to the manifold and pump indicating flow rate and media.

4. Remove the representative charcoal tube from the sleeve. The pump and manifold are calibrated as a unit and should not be separated until the samples have been collected. If the charcoal tube is run straight without a manifold, the calibration is performed by adjusting the flow directly on the pump.

8.7.2 Field Operation

1. Mobilize to the clean zone and calibrate the pumps.

2. Mobilize to the sampling location.

3. Crack the charcoal tube ends using a glass cracker.

4. Insert the charcoal tube in the sleeve with arrow pointing in the direction of air flow. (The smaller section is used for a backup and is positioned nearest the sampling pump.)

5. Screw the tip onto the sleeve so the charcoal tube is held in place.

6. Attach the sleeve(s) to a single or double manifold. At higher flow rates (>750 cm^3/min), charcoal tubes can run without a manifold. See figure 21.

7. To set up the sampling train, attach one end of the Tygon tubing (approximately 2 feet) to the tip of the sleeve or manifold. Attach the other end of the tubing to the inlet plug on the pump, figure 23 (appendix A).

8. Adjust time on the pump by adjusting past the zero mark several times to erase the pre-programmed time.

9. Place the charcoal tube in a vertical position on a dowel rod.

10. Record weather data (e.g., ambient temperature, barometric pressure, relative humidity, and wind direction).

11. Turn the pump on.

12. After the pump has run the full time, check the fault button to obtain the sample time. (This will indicate whether the pump ran for the scheduled time.)

13. Verify calibration.

8.7.3 Post Operation

1. Record the sampling time.

2. Remove the charcoal tube from the sleeve.

3. Immediately cap charcoal tubes with plastic caps. Never use rubber caps.

4. Place a sample ID# label on the tube.

5. Place the sample in a whirl bag labeled with the sample ID#, total volume, and required analysis. If duplicate samples have been collected, place both tubes in one whirl bag.

6. Indicate all applicable information on the chain-of-custody form (e.g., sample volume, ID#, location, date, and weather parameters).

7. If the sample tube must be stored for more than a week, refrigeration is recommended.

8. Provide the name(s) of the analytical methodology(ies) being requested to the lab with the samples.

To analyze the charcoal tubes, NIOSH Methods 1501, Aromatic Hydrocarbons; 1500, Hydrocarbons BP 36°-126°C; and 1003, Halogenated Hydrocarbons may be used. Other analytical parameters may be required. Determine the appropriate analytical methodology prior to field activities.

8.8 CALCULATIONS

The total volume of a sample is calculated by multiplying the total sample time by the flow rate. The total volume for each sample should be indicated on the chain-of-custody form.

8.9 QUALITY ASSURANCE/ QUALITY CONTROL

- Provide one field blank per sampling period or two field blanks for every 10 samples, whichever is greater. The tube should be handled in the same manner as the sampling tube (break, seal, and transport) except that no air is sampled through this tube.

- Provide a minimum of one appropriately labeled lot blank tube per sampling episode. The lab analyzing the samples can better determine the number of lot blank tubes required. These tubes are taken directly from the charcoal tube box. Do not break the ends.

- Provide one duplicate sample per 10 samples.

8.10 DATA VALIDATION

Results of the quality control samples will be evaluated. Utilize this information to qualify the environmental sample results in accordance with data quality objectives.

8.11 HEALTH AND SAFETY

Prior to initiating survey activities, a risk analysis is required to determine the hazards posed to sampling personnel. This will estimate any potential exposures to personnel, and define the extent of safety planning needed to complete the task.

Depending upon the hazards identified, a safety plan may be required prior to performing any site entry. In addition, real time monitoring may be necessary in order to verify ambient conditions and to determine adequate respiratory protection.

Specific hazards unique to charcoal tube sampling include:

- Sharp edges of the cracked tubes.

- Slip, trip and fall hazards at sampling locations.

9.0 TENAX TUBE SAMPLING: SOP #2052

9.1 SCOPE AND APPLICATION

Tenax/carbonized molecular sieve (CMS) tube sampling is utilized to identify specific contaminants in air. Compounds that can be determined by Tenax (U.S. EPA Method TO-1) are non-polar organics having boiling points in the range of approximately 80°C to 100°C. Compounds which can be determined by CMS are non-polar, non-reactive organics having boiling points in the range 15°C to 120°C. However, not all compounds falling into these category can be determined. Listed in table 10 below are many of the compounds which can be detected using Tenax/CMS. Analysis is performed by thermal desorption into a gas chromatograph/mass spectrometer/data system (GC/MS/DS).

9.2 METHOD SUMMARY

Tenax/CMS tube sampling is performed by drawing a known volume of air through a Tenax absorbent followed by a carbonized molecular sieve (CMS) adsorbent. Volatile organic compounds are captured on the adsorbent while major inorganic atmospheric constituents pass through or are only partially retained. After sampling, the tube is returned to the laboratory for analysis (U.S. EPA Method TO-1 and TO-2).

9.3 SAMPLE PRESERVATION, CONTAINERS, HANDLING, AND STORAGE

Tenax/CMS tubes contain a granular inert chemical compound with adsorbent properties. A flame-sealed outer glass tube protects the Tenax/CMS tube from contamination. This outer glass tube must be broken prior to sampling. The Tenax/CMS air tube is 6-mm OD and 4-mm ID containing one section of 150 mg Tenax, 35/60 mesh and one section of 150 mg CMS 60/80 mesh.

Prior to site work, the culture tubes should be cleaned and prepared using the following procedure:

1. Place a plug of precleaned, silanized glass wool (methanol rinsed, baked in an oven at 120°C) in the bottom of each tube.

2. Place the culture tubes in an oven for at least 2 hours at 120°C. Do not bake the Teflon-lined caps.

3. Remove the culture tubes from the oven and allow them to cool.

4. Place the culture tubes in a Ziploc bag or whirl pack.

Table 10: Compounds Detected by Tenax/CMS

• benzene	• 1,2-dichloroethane	• toluene
• bromochloromethane[1]	• 1,1-dichloroethene	• 1,1,1-trichloroethane
• bromodichloromethane	• trans-1,2-dichloroethene	• 1,1,2-trichloroethane
• p-bromofluorobenzene	• ethylbenzene	• trichloroethylene
• carbon tetrachloride	• m-ethyltoluene	• trichlorofluoromethane
• chloroethane	• methylene chloride	• trichloromethane
• chloromethane	• styrene	• vinyl chloride
• dibromomethane	• 1,1,2,2,-tetrachloroethane	• m-xylene
• 1,1-dichloroethane	• tetrachloroethylene	• o-xylene

(1) Surrogate - Surrogates are injected into the Tenax tube to determine adsorption efficiencies.

Refrigerate the samples and keep out of sunlight. Storage for more than 4 weeks is not recommended.

9.4 INTERFERENCES AND POTENTIAL PROBLEMS

Contamination of the Tenax/CMS air tubes with the compound(s) of interest is a common problem. To minimize this problem, be extremely careful in preparing, storing, and handling the air tube throughout the sampling and analysis process. To avoid contamination from skin oils, use a lint-free glove when handling Tenax air tubes.

9.5 EQUIPMENT/APPARATUS

9.5.1 Equipment List

- calibrated personal sampling pump
- dual rotameter with stand and precalibrated flow rate
- Tenax/CMS tube, preferably of the same lot number
- flexible Tygon tubing (for attaching the tube holder system to the suction side of the pump)
- universal tube holder system
  - dual variable manifold flow controller
  - tube holder end with rubber boot adaptor
  - sleeves (clear plastic housings)
- glass cracker
- lint free cloth
- glass wool
- Teflon tape
- culture tubes

9.5.2 Equipment Sources

While there may be other sources, Tenax can readily be obtained from Supelco Inc., Bellefonte, PA, at (800) 247-6628; Technical Service (814) 359-3441 and MSA, 1-800-MSA-2222.

9.6 REAGENTS

Methanol is used in the lab to clean the glass tubing which holds the Tenax samples. Cleaning is performed prior to site work.

9.7 PROCEDURES

9.7.1 Calibration

1. Assemble the calibration train as shown in figure 23 using a rotameter, sampling pump, manifold, and representative Tenax tubes. Tenax tubes from the same lot are used for both sampling and calibration.

2. Adjust the sampling pump to the low-flow mode.

3. Remove the cap ends on the flow controller manifold. To adjust the flow, turn the needle valve with a small screwdriver (counter-clockwise to increase, clockwise to decrease).

4. Turn the flow-adjust screw on each manifold until the float ball on the rotameter is lined up with the precalibrated flow rate value. A sticker on the rotameter should indicate this value (see figure 24).

5. Affix a sticker to the manifold and pump indicating the calibrated flow rate and media.

6. Remove the representative Tenax tubes from the sleeves.

The pump and manifold (including boots) are calibrated as a unit and should not be separated until the samples have been collected.

The pump and manifold are calibrated on-site in the clean zone immediately prior to sample collection. See table 11 for flow rate ranges and volumes.

Table 11: Recommended Flow Rates and Sample Volumes

	Flow Rate	Volume
Maximum	50 cm^3/min	5 liters
Optimum	30-40 cm^3/min	2 liters
Minimum	10 cm^3/min	0.5 liter

9.7.2 Field Operation

1. Calibrate pumps with manifolds as shown in section 9.7.1.

2. Crack the outer glass tube using a glass cracker.

3. Use a clean, lint-free cloth or gloves to remove the Tenax tube from the outer glass housing.

4. Insert the Tenax tube into a boot, with the carbonized molecular sieve section closest to the manifold.

5. Attach a protective sleeve over the tube. Do not enclose the Tenax tube end.

6. Set up the sampling train, by attaching one end of the Tygon tubing (approximately 60 cm or 2 feet) to the manifold; and the other end to the inlet plug on the pump (figure 25).

7. Place the sampling tube in the breathing zone. The pump and tube can be placed on a drum or hooked to a fence. A wooden dowel rod can also be used.

8. Position the tube either vertically or horizontally.

9. Adjust the pump time.

10. Turn the pump on.

11. Record weather data (e.g., ambient temperature, barometric pressure, relative humidity and wind direction).

12. Check the pump at the midpoint of the sampling period if longer than 4 hours.

9.7.3 Post Operation

1. At the end of the sampling period, check the fault button to obtain the run time. Record the run time. (This indicates whether or not the pump ran the full scheduled time.)

2. Check the flow rate and record the values in a field logbook.

3. Remove the Tenax tubes from sleeves using a lint-free cloth.

4. Place the Tenax tube in a culture tube. Tenax tubes from the same manifold and identical flow rates can be placed in the same culture tube.

5. Place a sample sticker indicating sample ID# on the culture tube. Do not put a sample sticker on the Tenax tube itself as this will contaminate the tube.

6. Attach the culture tube lid and wrap the lid/tube interface with Teflon tape.

7. Place the culture tubes into a Ziploc bag or a whirl pack.

8. Keep the samples refrigerated and out of sunlight. Storage for more than 4 weeks is not recommended.

9. Indicate all applicable information on the chain-of-custody form (e.g., sample volume, sample ID#).

10. Provide a copy of the air data sheets and the name of the preferred analytical methodology with the samples to the lab.

9.8 CALCULATIONS

The volume for each sample should be indicated on the chain-of-custody form.

Use the formula below to obtain the total volume:

Total Volume = Flow Rate × Time (minutes)

9.9 QUALITY ASSURANCE/ QUALITY CONTROL

Varying the sample volumes at the same location provides field QA/QC.

- Provide one appropriately labeled field blank per 10 samples. Handle this tube in the same manner as the sampling tube (break, seal, and transport), except that no air is sampled through this tube.

- Provide a minimum of one appropriately labeled lot blank tube per sampling episode. These tubes are taken directly

from the Tenax tube box. Do not break the outer glass housing. Place in a Ziploc bag and keep with other samples. Indicate the lot blank number on the chain-of-custody form.

- All sample stations should have duplicate sample tubes.

9.10 DATA VALIDATION

Results of the quality control samples (lot and trip blanks) will be evaluated for contamination. This information will be utilized to qualify the environmental sample results according to data quality objectives.

Data will be qualified according to acceptable variation on the prescribed flow rates (see table 11).

9.11 HEALTH AND SAFETY

Prior to initiating survey activities, an analysis of risk is required to determine the hazards posed to sampling personnel. This will estimate any potential exposures to personnel, and define the extent of safety planning needed to complete the task. Depending upon the hazards identified, a safety plan may be required prior to performing any site entry. In addition, real time monitoring may be necessary in order to verify ambient conditions and to determine adequate respiratory protection.

Specific hazards associated with Tenax tube sampling include:

- Small pieces of glass flying during "cracking" of the tube.

- Slip, trip and fall hazards at sampling locations.

10.0 POLYURETHANE FOAM SAMPLING: SOP #2069

10.1 SCOPE AND APPLICATION

The purpose of this Standard Operating Procedure (SOP) is to outline the protocol for collection of polyurethane foam (PUF) samples. The PUF sampler is a complete air sampling system designed to simultaneously collect suspended airborne particulates and to trap airborne pesticide vapors. This system can efficiently collect a number of organochlorine and organophosphate compounds (e.g., dioxins, and polychlorinated biphenyls).

10.2 METHOD SUMMARY

Ambient air is drawn into a covered housing, then through a filter and foam plug by a high-flow-rate pump operating at a level of approximately 250 L/min (approximately 9 ft^3/min). This allows a sample of total suspended particulates (TSP) to collect on the filter surface. The foam plug allows collection of vapor which might be stripped from the particulates on the filter.

10.3 SAMPLE PRESERVATION, CONTAINERS, HANDLING, AND STORAGE

Prior to sampling, ask the laboratory whether pre- and post-sampling filter weighing is appropriate.

After sampling, the foam plug and filter should be stored in an 8-oz. glass jar. The foam plug should occupy the bottom portion of the jar and the filter should be folded into quarters and placed on top of the plug. The jar is then wrapped with aluminum foil (shiny side out).

10.4 INTERFERENCES AND POTENTIAL PROBLEMS

Humidity can pose a problem; although glass fiber filters are comparatively insensitive to changes in relative humidity, collected particulate matter can be hygroscopic.

10.5 EQUIPMENT/APPARATUS

Specifications for equipment and supplies for monitoring ambient air for total suspended particulates (TSP) are provided in U.S. EPA's Reference Method: Determination of Suspended Particulates in the Atmosphere (High Volume Method) EPA/600/4-77/027a.

10.5.1 Sampling Media (Sorbents)

- polyurethane foam (PUF). Use polyether-type polyurethane foam (density No. 3014, 0.0225 grams/cm^3, or equivalent). This foam is the type generally used for furniture upholstery, pillows, and mattresses (General Metals Work's part number PSI-16 3-inch PUF plug is recommended, although 1- and 2-inch pieces are also available). This type of foam is white, and yellows on exposure to light. It should therefore be stored in a dark place (e.g., black trash bags or a cooler).

- 102-mm diameter glass fiber filter.

10.5.2 Sampling Equipment

- PSI PUF sampler or equivalent
- calibrated scale (if weighing is required)
- Teflon-coated tweezers
- aluminum foil
- hexane
- powder-free surgical gloves
- Solvex gloves
- sampling module holder
- plastic bag
- source of electricity (AC/DC): an electrical source of 100 volts, 15 amps is required

10.6 REAGENTS

Reagents are not used for preservation of PUF samples. Hexane is required for decontaminating PUF glassware. No other decontamination solutions are required.

10.7 PROCEDURES

10.7.1 Calibration of Timer, Meters and Standards

Elapsed-Time Meter

Every 6 months, the elapsed-time meter should be checked against a timepiece of known accuracy, either on site or in the laboratory. A gain or loss of more than 2 minutes per 24 hours warrants adjustment or replacement of the indicator. Record the results of these checks in the calibration logbook.

Flow Rate Transfer Standard

Calibration of the high-volume sampler's flow indicating device or the control device is necessary to establish traceability of the field measurement to a primary standard via a flow-rate transfer standard. The calibration procedures for orifice type flow transfer standards are listed in EPA's Test Method, 600/4-77/027a.

Upon receipt and at 1-year intervals, the calibration of the transfer standard orifices should be certified with a positive displacement standard volume meter (such as a Rootsmeter) traceable to the National Bureau of Standards (NBS). Calibration orifice units should be visually inspected for signs of damage before each use, and they should be recalibrated if the inspection reveals any nicks or dents in the orifice.

10.7.2 Field Calibration of High Volume Sampler

Calibration of the PUF sampler is performed **without** a foam plug and **without** filter paper in the sampling module. However, the empty glass cartridge **must remain** in the module to ensure a good seal through the module.

1. Connect the transfer standard orifice to the sample module. Ensure that no leaks exist between the orifice unit and the sampler.

2. Connect the orifice manometer to the orifice pressure tap.

3. Verify that the flow indicator is properly connected to the pressure tap on the lower side of the motor housing on the high volume sampler.

4. Set the manometer to "zero" as shown in figure 25 (appendix A).

5. Fully open the ball valve.

6. Fully open the voltage control screw. (Turn the screw next to the magnahelix gauge clockwise.)

7. Operate the sampler for at least 15 minutes to establish thermal equilibrium prior to calibration.

8. Adjust the voltage control screw to obtain the desired reading (perhaps 70) inches on the dial gauge (Magnahelix Gauge). A five-point calibration should be conducted in the range of the desired flow rate.

9. Record the dial gauge number 70 as your first calibration point, then read and record the pressure drop across the transfer standard orifice (H). Figure 25 (appendix A) demonstrates how to read the change in pressure drop.

10. Let the sampler run for at least 2 minutes to re-establish the run temperature conditions.

11. Adjust the voltage by moving the ball valve (red valve) to adjust the dial gauge down to 60 (arbitrary) inches. (Repeat steps 9-10.)

12. Using the above procedure (steps 9-11), adjust the ball valve for readings at 50, 40, and 30 inches.

13. Fully open the ball valve.

14. Turn the voltage-control screw clockwise as far as possible.

15. Measure and record the barometric pressure and ambient temperature on a field data sheet.

10.7.3 Sample Module Preparation

1. Put on powder-free surgical gloves.

2. Place the lower canister (figure 26, appendix A) sampling module in the module holder. All

sampling equipment should be precleaned with hexane prior to use.

3. Check to ensure that the upper and lower orange silicone gaskets are in place (figure 26, appendix A).

4. Load the glass cartridge with a clean foam plug (with tweezers), making sure the foam is evenly distributed throughout the cartridge, and install in the module tube. (PUF plug should have been pre-cleaned with hexane by the laboratory that will be analyzing the samples.)

5. Install the filter holder assembly.

6. If filter weighing is required, weigh the 102-mm diameter glass fiber filter and record the weight in an analytical balance logbook. Calibrate an electronic balance; weighing paper filter is required.

7. Install lower Teflon gasket in the filter holder.

8. Handle the filter paper with Teflon-coated tweezers.

9. Place glass fiber filter (rough side up) into the filter holder.

10. Install the upper Teflon gasket.

11. Replace the 4-inch hold down ring and tighten the swing bolts.

12. Ensure that all fittings are snug, yet not overtight. (Overtightening will distort the gaskets.)

13. Cover the sample module with a clean plastic bag and place in a cooler.

14. Assemble a field blank and store in the same cooler.

It is recommended to have two sampling modules for each sampling system so that the filter and foam exchange can take place in the laboratory. The second set of modules is used for the subsequent sampling round.

10.7.4 Unit Operation

1. Transport the PUF sampler (figure 27, appendix A) to the desired location. The PUF sampler may be operated at ground level or elevated on scaffolding. The sampler should be located in an unobstructed area, at least two meters from any obstacle to air flow. In urban or congested areas, it is recommended that the sampler be placed on the roof of a single story building.

2. Calibrate the PUF sampler as indicated in section 10.7.2.

3. Adjust the exhaust hose downwind of the sampler.

4. Put on clean powder-free surgical gloves.

5. Place the loaded sampling module into the quick release fitting and engage by locking the two levers down securely.

6. Remove the plastic bag.

7. A field logbook or field data sheets should be used to record information (e.g., location, elapsed time meter, and time of day).

8. Turn the unit on.

9. Depending upon the desired flow rate, adjust the magnahelix gauge by turning the voltage control screw clockwise to increase, and counterclockwise to decrease the reading.

10. Wait approximately 2 minutes for the magnahelix gauge reading to stabilize, and then record it. The magnahelix dial gauge readings should be taken at the beginning and end of each sampling period. Differences between the two dial gauge numbers should be averaged.

11. Collect and average weather condition data during the sampling period, (e.g., wind direction, temperature, barometric pressure, and wind speed).

10.7.5 Unit Shutdown and Sample Collection

1. Using powder-free surgical gloves, open the shelter housing and record the magnahelix gauge reading.

2. Turn the sampler off and record the elapsed time meter. Also, record the time of day.

3. Remove the sample module.

4. Cover the sample module with a polyethylene (plastic) bag. Keep the sample module in a vertical position at all times.

5. Place the sample module in a cooler. The field blank should also be stored in the same cooler.

6. Wearing Solvex gloves, wipe down the interior of the sampler with hexane and chem wipes.

7. If additional sampling is scheduled, install a new sampling module. The unit must be decontaminated with hexane and chem wipes prior to initiating another sampling round. If no additional sampling is scheduled, secure the unit.

8. Weigh the sample filter in a field laboratory, if required.

10.8 CALCULATIONS

Calculations are provided in U.S. EPA's Reference Method for Determination of Suspended Particulates in the Atmosphere (High-Volume Method), EPA/600/4-77/027a.

10.9 QUALITY ASSURANCE/ QUALITY CONTROL

Provide one field blank per sampling period or two field blanks for every 10 samples, whichever is greater.

10.10 DATA VALIDATION

Results of the quality control samples (field blanks) will be evaluated for contamination. This information will be utilized to qualify the environmental sample results in accordance with the data quality objectives.

10.11 HEALTH AND SAFETY

When working with potentially hazardous materials follow U.S. EPA, OSHA, and site-specific health and safety practices.

APPENDIX A

Figures

Figure 1: SUMMA Canister Cleaning System

SOP #1703

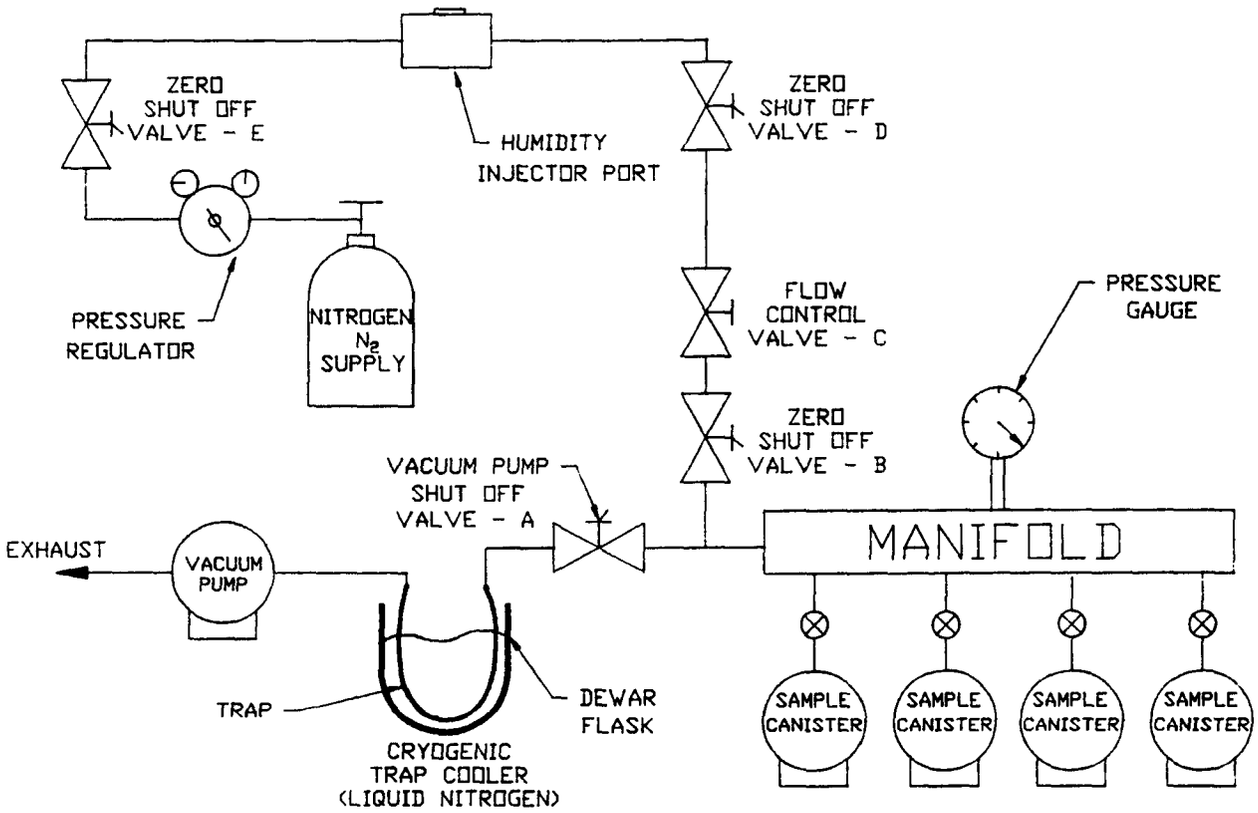

Figure 2: Pressurized and Subatmospheric Canister Sampling Systems

SOP #1704

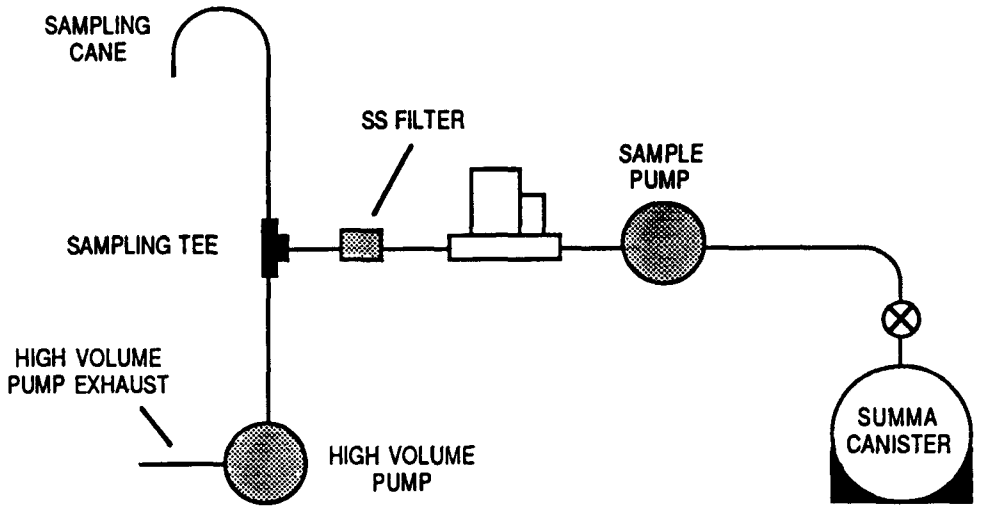

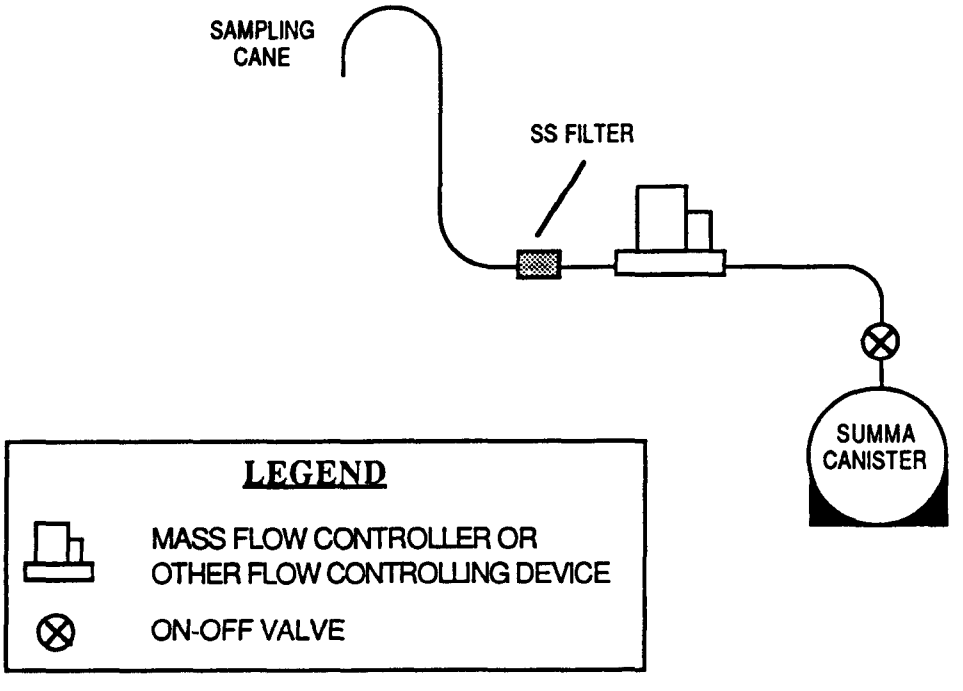

Figure 3: Tekmar Model 5010

SOP #1705

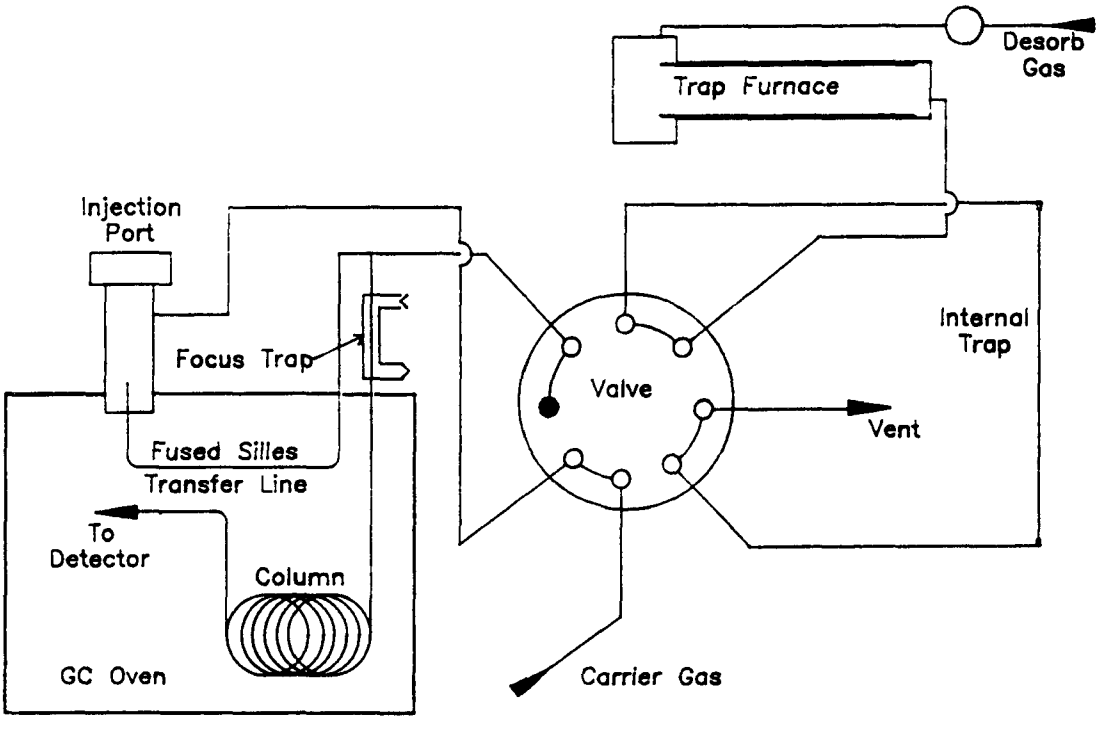

Figure 4: GC/MS Printout

SOP #1705

Operator ID: Bob
Output File: ^83874::D4
Data File: >83874::D4
Name: DAILY STANDARD
Misc: + 10 mL Surrogates

Quant Rev: 6

Quant Tme: 910416 14:30
Injected at: 910416 14:09
Dilution Factor: 1.00000

ID File: ID_SCT::D3
Title: GC/MS ANALYSIS OF TENAX/CMS CARTRIDGES (TO-1 & TO-2)
Last Calibration: 910411 14:17

#	Compound	R.T.	Scan #	Area	Conc.	Units	q
1)	#chloromethane	1.16	6	13555	664.87	PPR	74
2)	#vinyl chloride	1.25	16	13287	945.36	PPR	88
3)	#chloroethane	1.55	47	6583	881.16	PPR	93
4)	#trichlorofluoromethane	1.85	79	30141	814.42	PPR	95
5)	#1,1-dichloroethene	2.27	123	24379	825.44	PPR	88
6)	#methylene chloride	2.56	154	21909	803.94	PPR	93
7)	#trans-1,2-dichloroethene	3.15	216	25986	935.12	PPR	88
8)	#1,1-dichloroethane	3.50	253	29558	826.53	PPR	95
9)	#bromochloromethane	4.49	358	60788	1767.00	PPR	99
10)	#trichloromethane	4.55	364	35369	880.60	PPR	92
11)	#1,1,1-trichloroethane	5.24	432	32525	887.10	PPR	90
12)	#1,2-dichloroethane	5.39	453	28951	914.97	PPR	99
13)	carbon tetrachloride	5.67	482	25779	881.95	PPR	94
14)	#benzene	5.67	482	38009	775.10	PPR	93
15)	#trichloroethylene	6.77	598	23850	873.51	PPR	94
16)	#dibromomethane	6.79	601	29591	923.39	PPR	65
17)	#bromodichloromethane	6.98	620	35690	928.61	PPR	89
18)	#toluene	8.63	795	52178	888.48	PPR	87
19)	#1,1,2-trichloroethane	8.80	813	21806	892.69	PPR	89
20)	#tetrachloroethylene	9.76	914	34262	861.90	PPR	95
21)	#ethylbenzene	11.14	1060	72692	925.43	PPR	82
22)	#meta-xylene	11.34	1081	59722	939.36	PPR	92
23)	#styrene	11.88	1138	39679	1004.09	PPR	89
24)	#ortho-xylene	11.93	1143	64382	1008.13	PPR	79
25)	#1,1,2,2-tetrachloroethane	12.41	1194	53557	795.33	PPR	92
26)	#p-bromofluorobenzene	12.69	1223	37795	1142.98	PPR	98
27)	#meta-ethyltoluene	13.61	1320	21354	979.34	PPR	93

Compound uses FSTD

Figure 5: SUMMA Canister Sample Dilution Line

SOP #1705

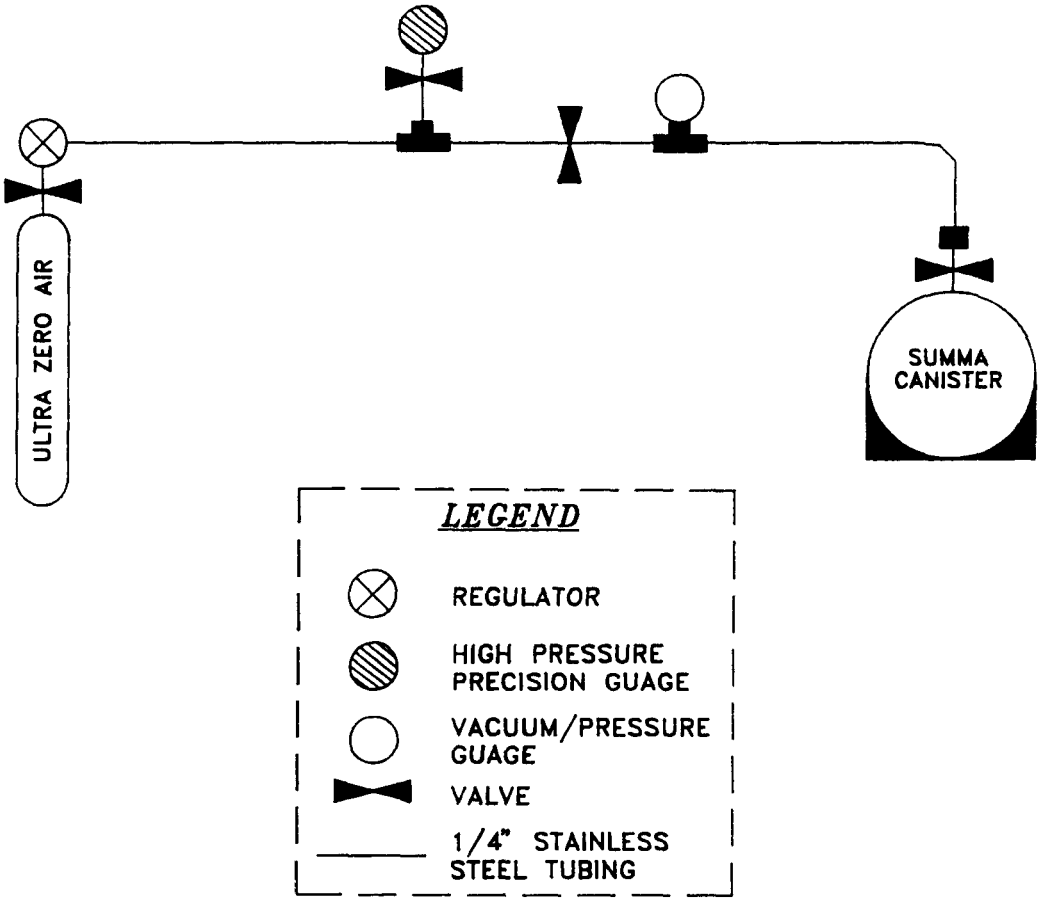

Figure 6: SUMMA Canister Analysis Train (Tekmar 5010 GC)

SOP #1705

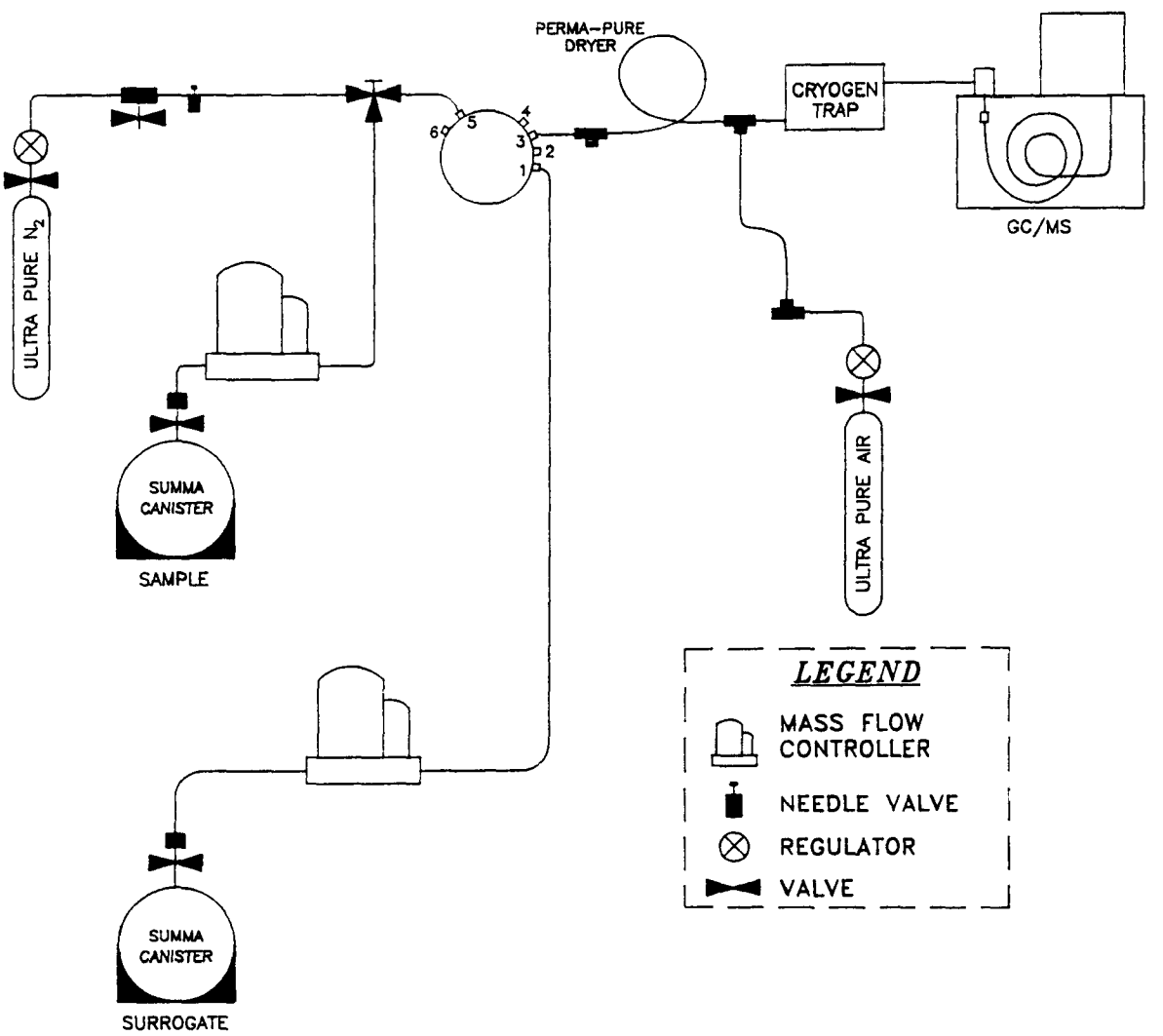

Figure 7: Canister Sample Absorbed onto Tenax

SOP #1705

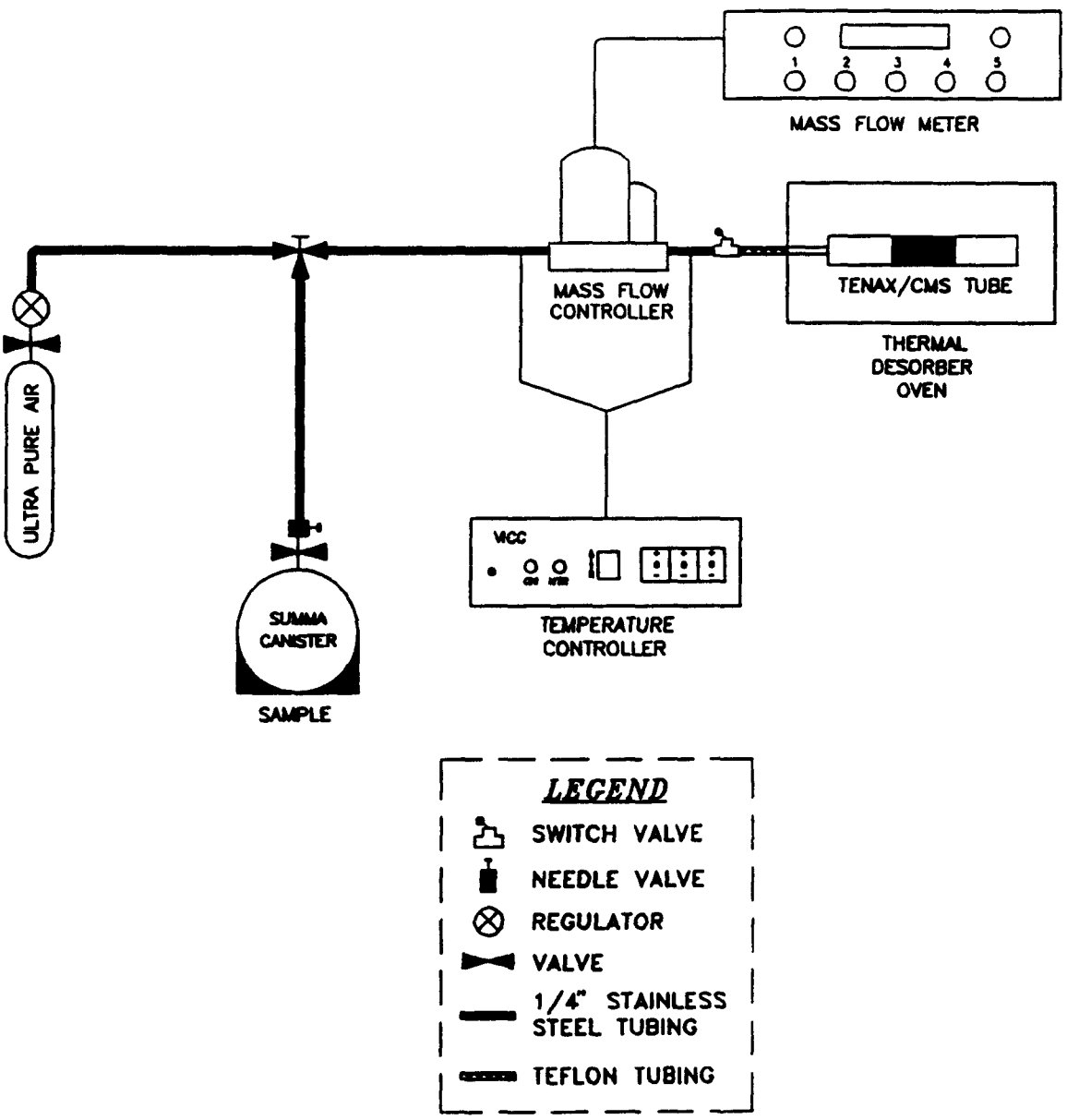

Figure 8: Teflon "Tee" Setup

SOP #1706

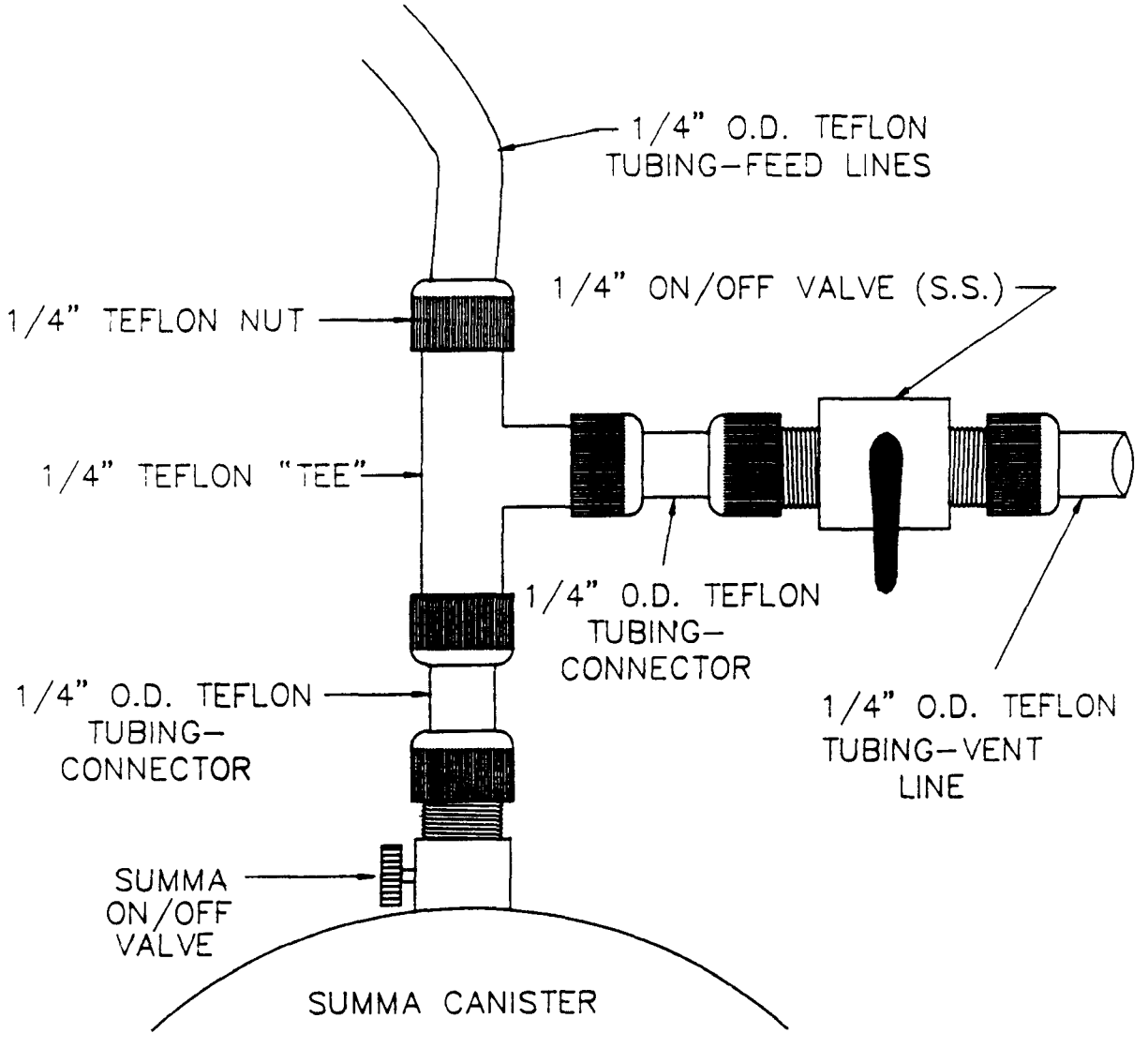

Figure 9: SUMMA Canister Charging System

SOP #1706

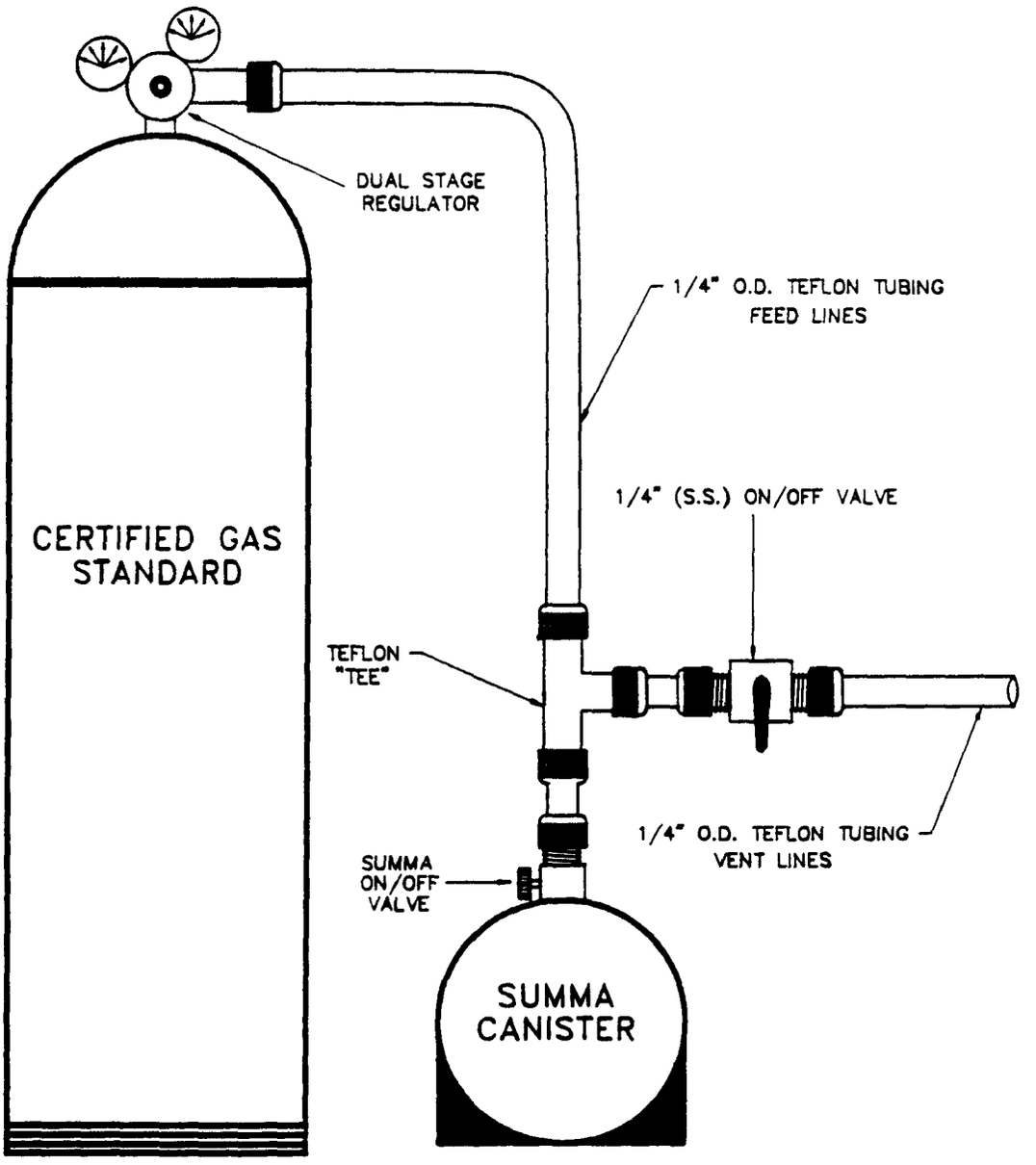

Figure 10: Septum "Tee" Setup

SOP #1706

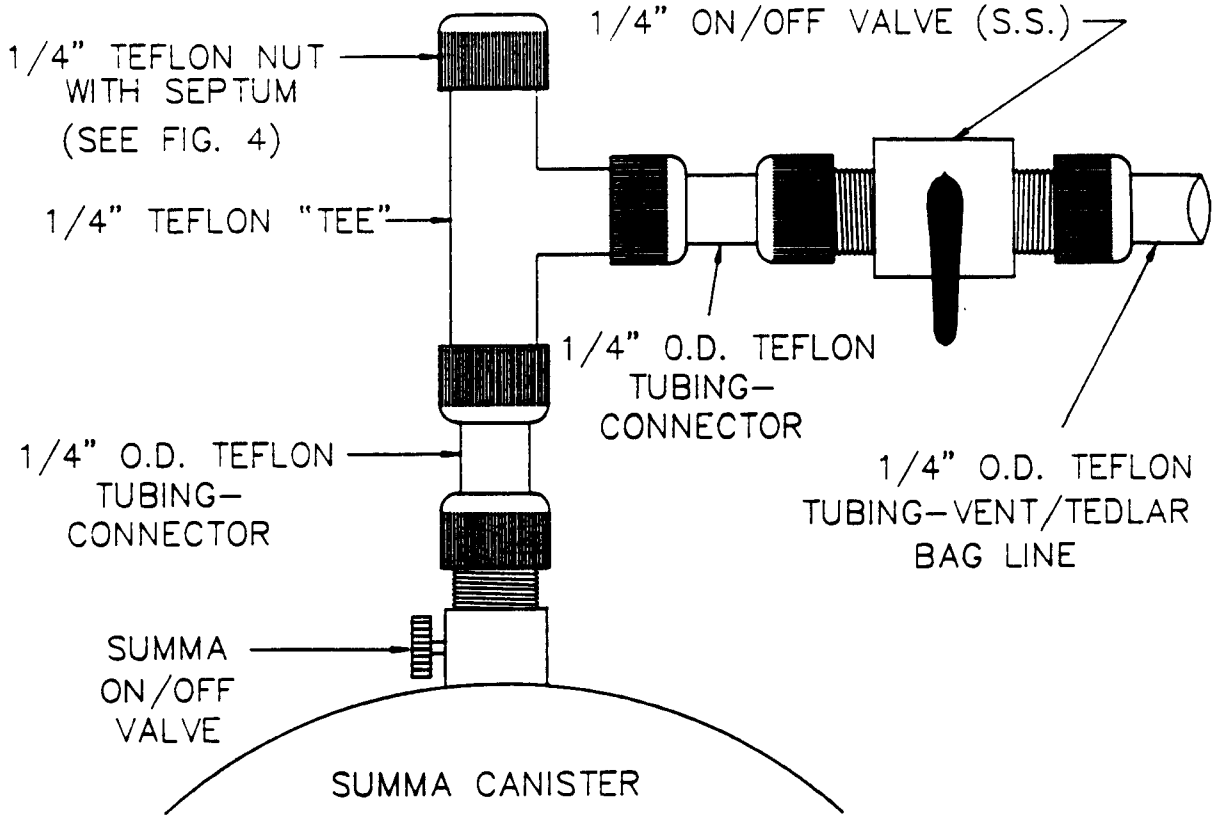

Figure 11: Teflon Nut With Septum

SOP #1706

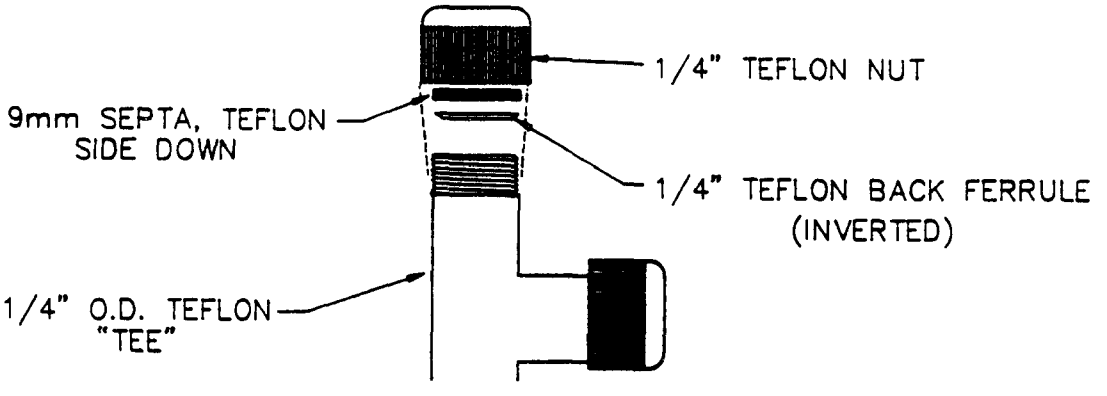

Figure 12: Phase Contrast Microscopy Filter Cassette

SOP #2015

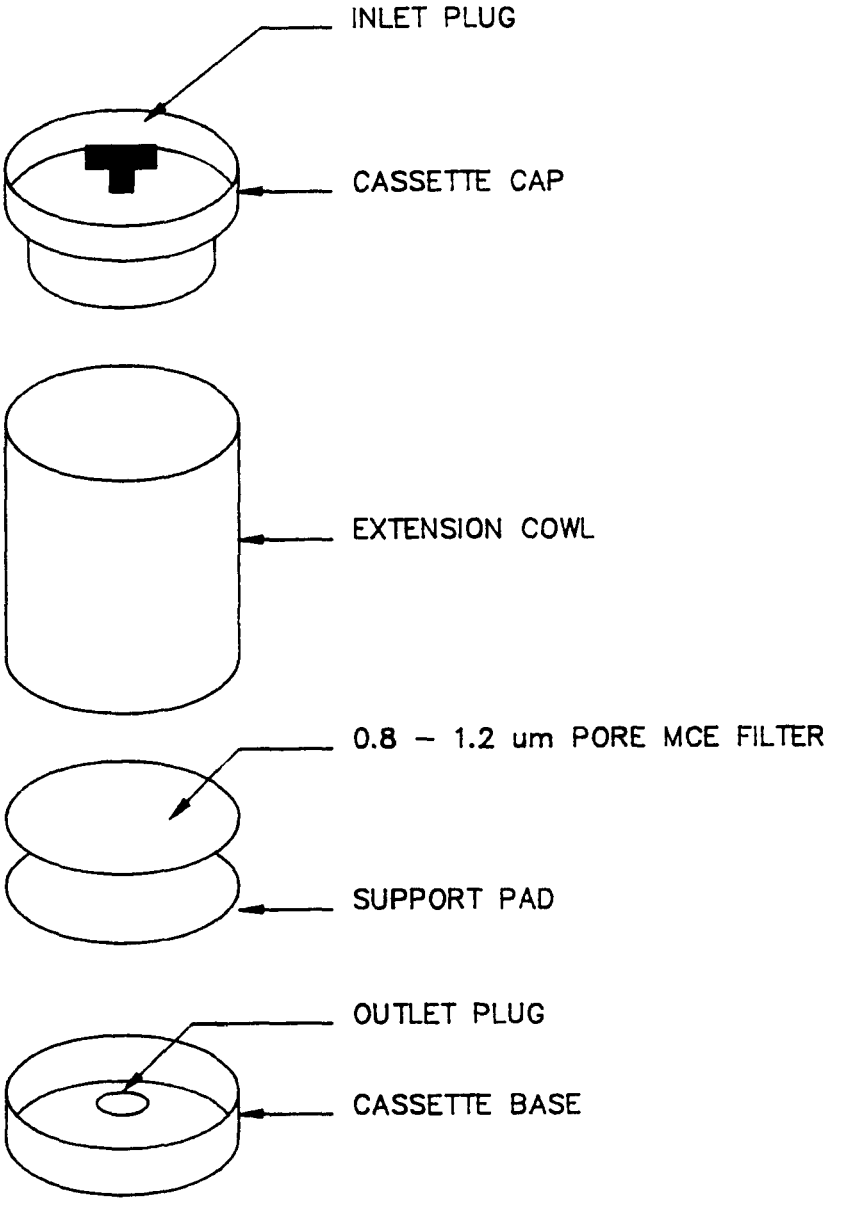

Figure 13: Transmission Electron Microscopy Filter Cassette

SOP #2015

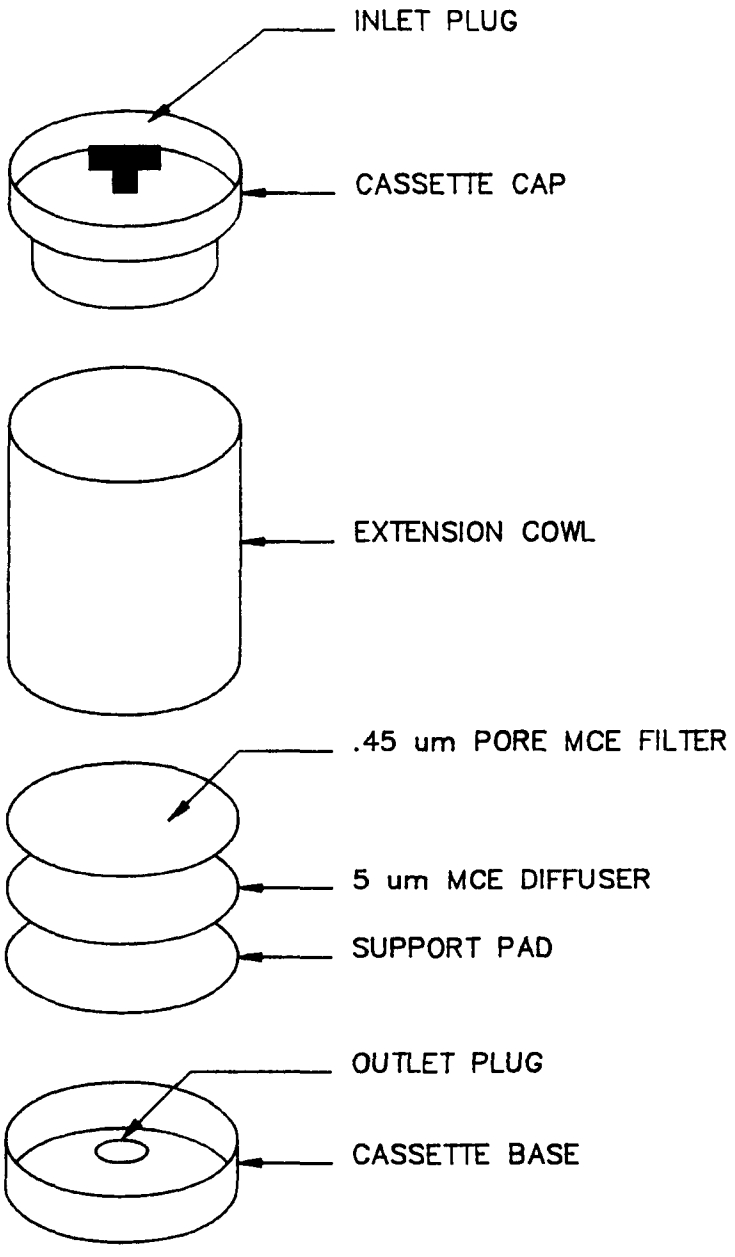

Figure 14: Personal Sampling Train for Asbestos

SOP #2015

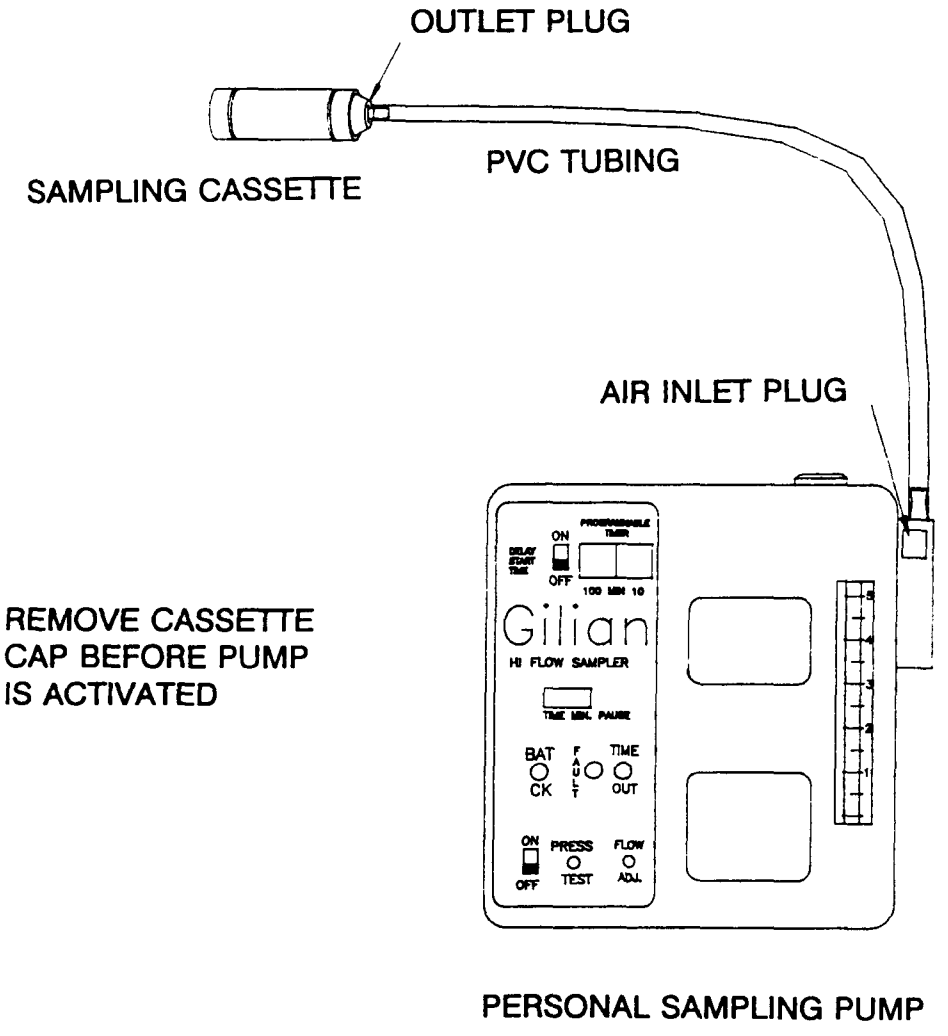

Figure 15: High Flow Sampling Train for Asbestos

SOP #2015

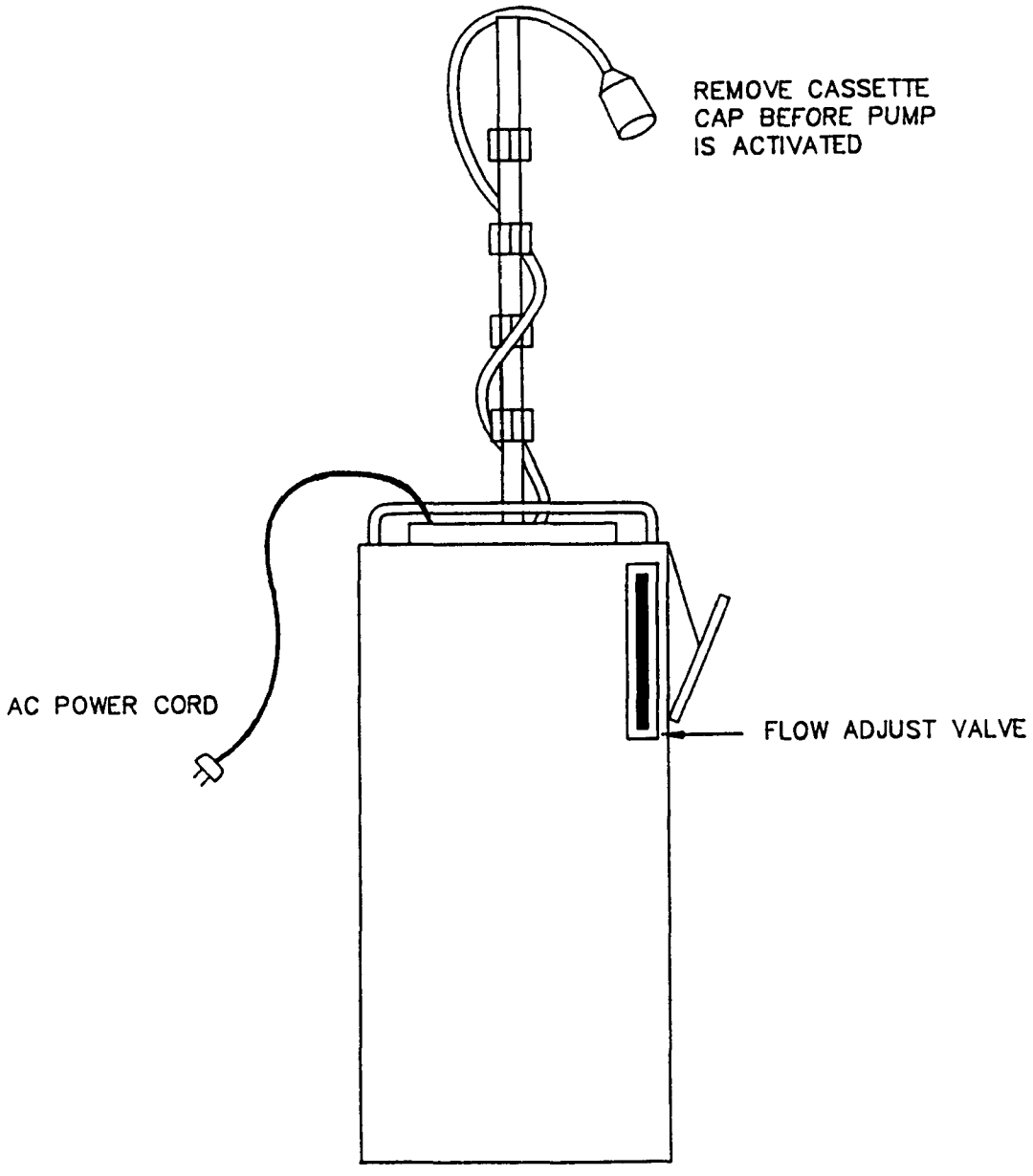

Figure 16: Calibrating a Personal Sampling Pump with a Bubble Meter

SOP #2015

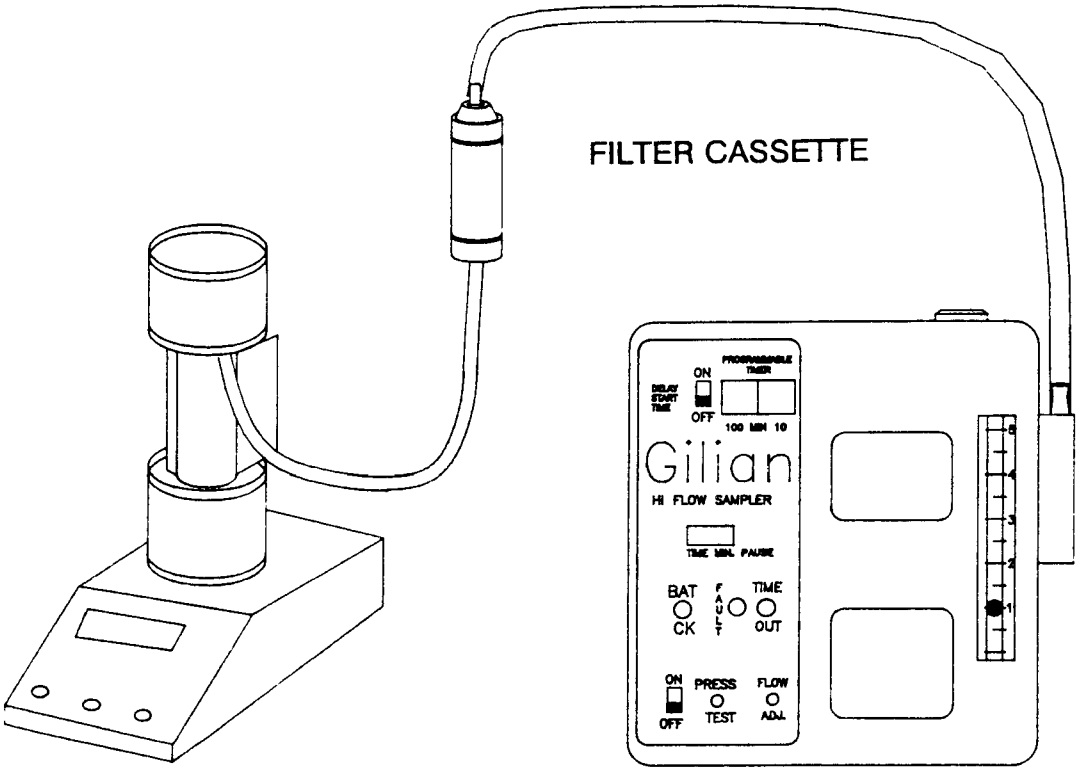

BUBBLE METER/ELECTRONIC CALIBRATOR

PERSONAL SAMPLING PUMP

Figure 17: Calibrating a Rotameter with a Bubble Meter

SOP #2015

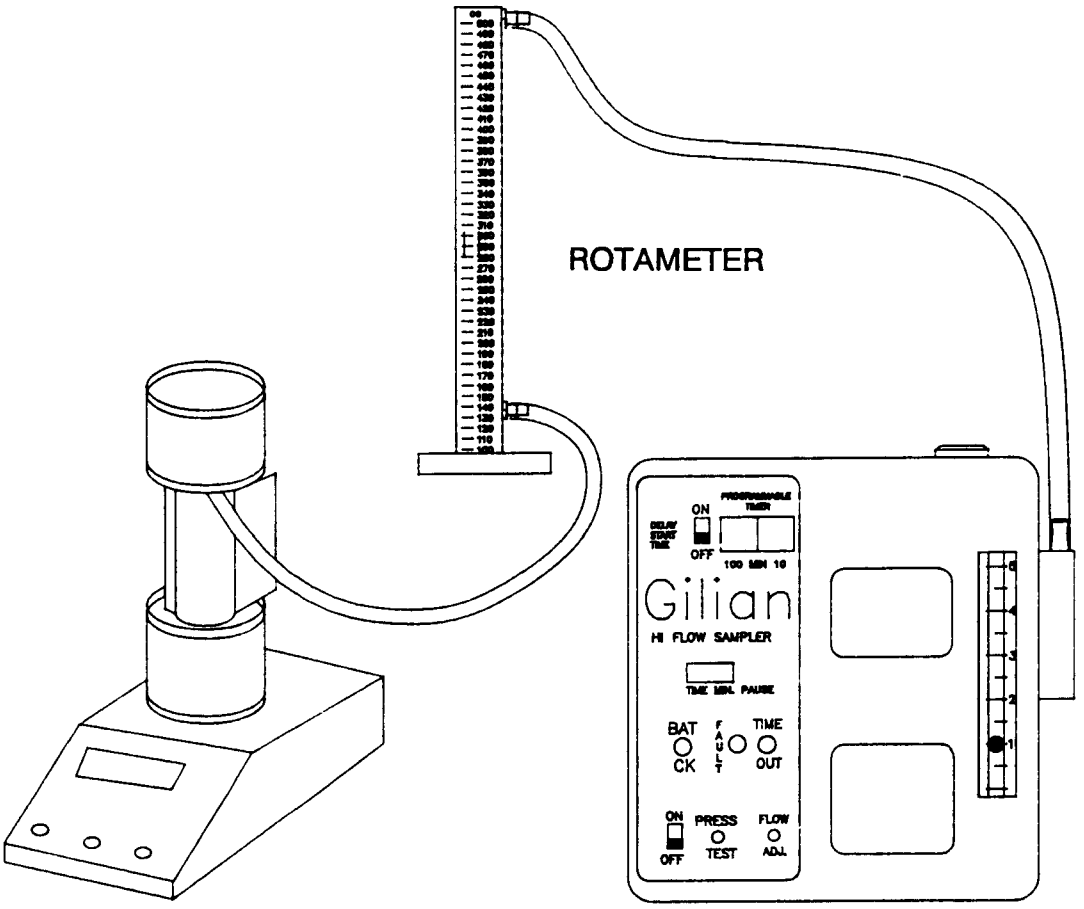

BUBBLE METER/ELECTRONIC CALIBRATOR

PERSONAL SAMPLING PUMP

Figure 18: Calibrating a Personal Sampling Pump with a Rotameter

SOP #2015

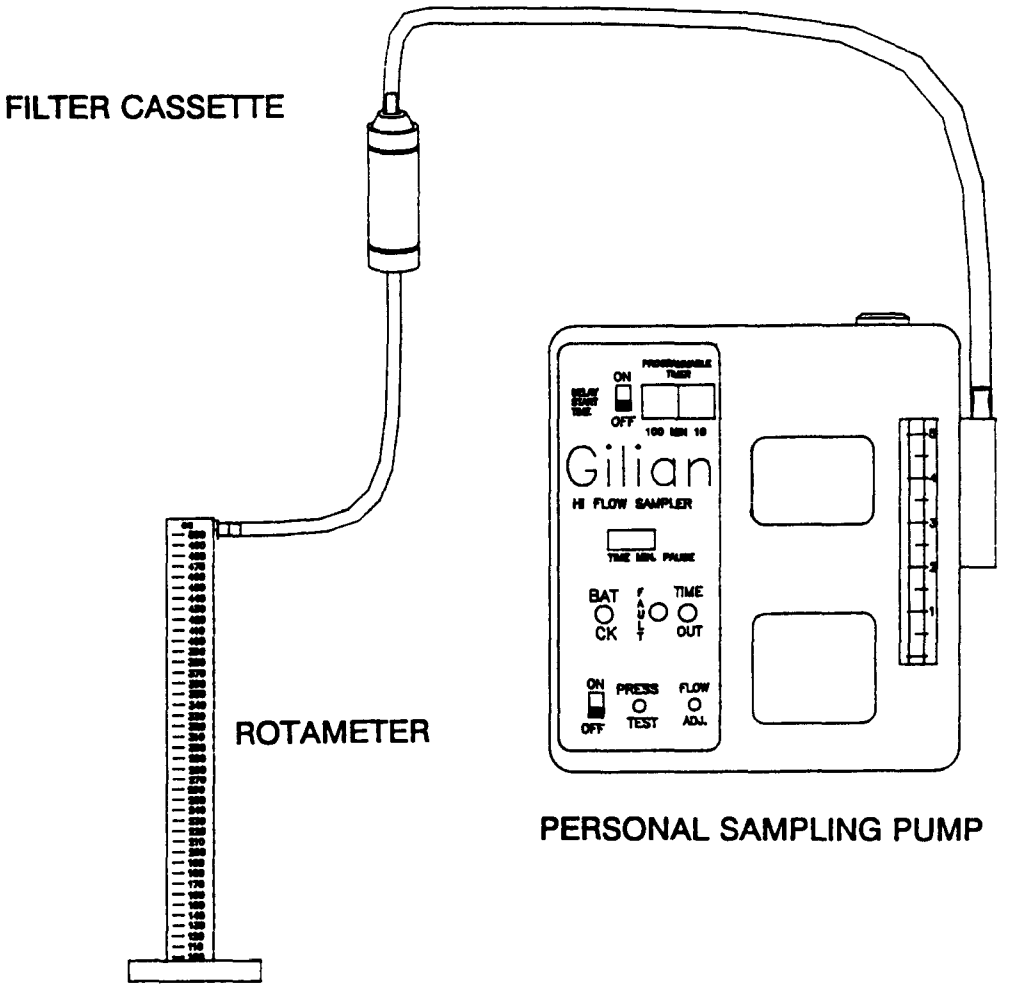

Figure 19: Tedlar Bag Sampling Apparatus

SOP #2050

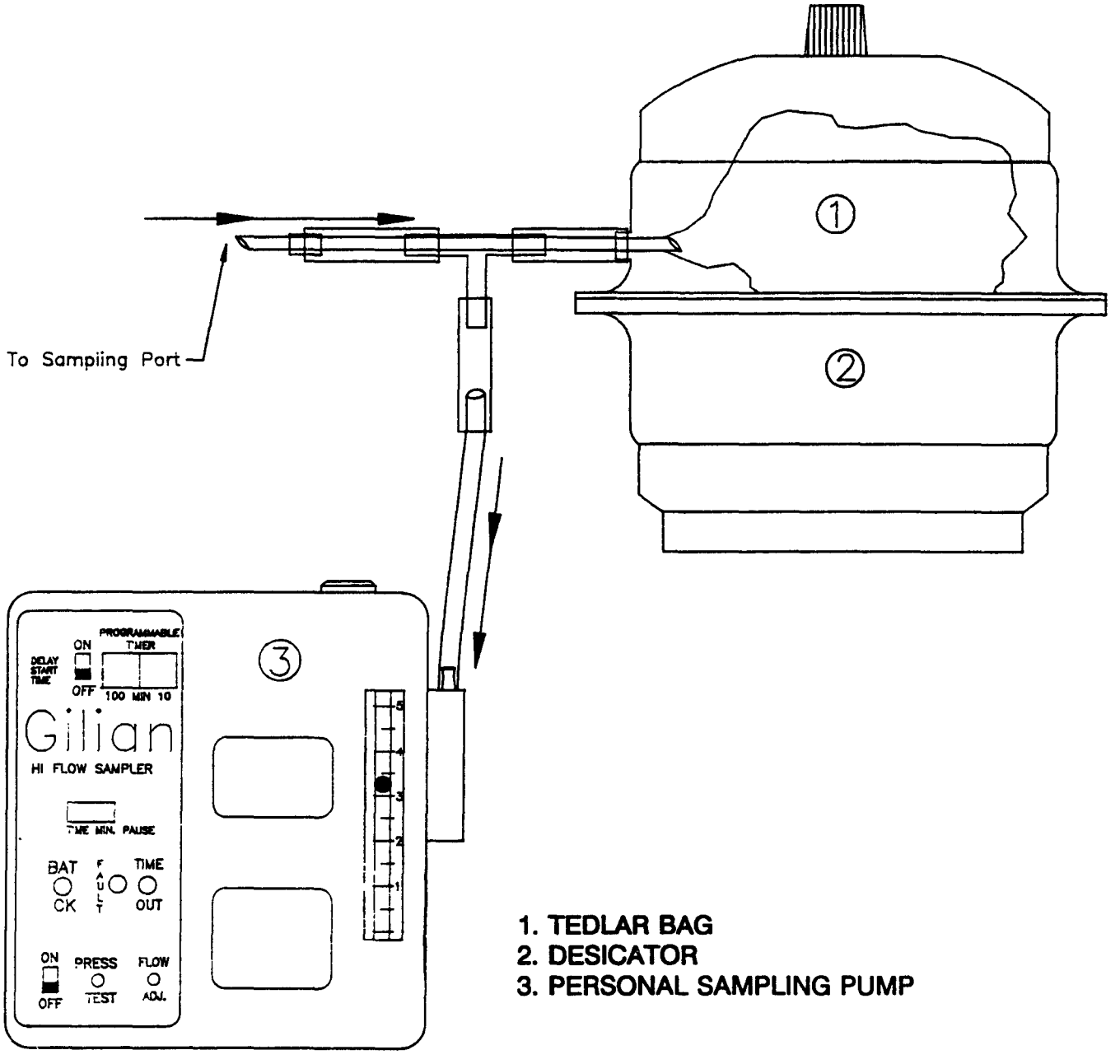

Figure 20: Calibrating a Double Manifold Charcoal Tube with a Rotameter

SOP #2051

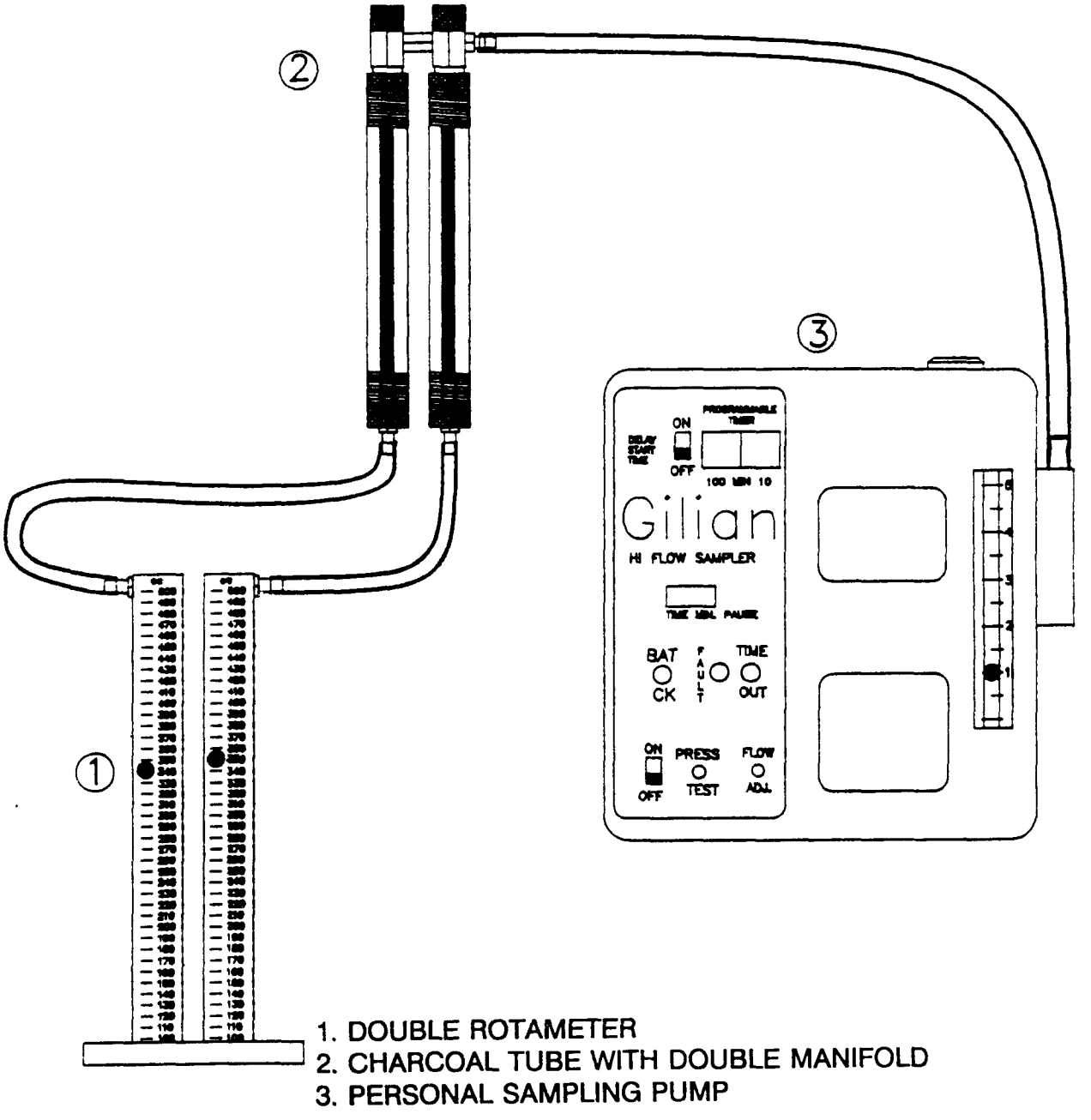

Figure 21: Charcoal Sampling, Straight

SOP #2051

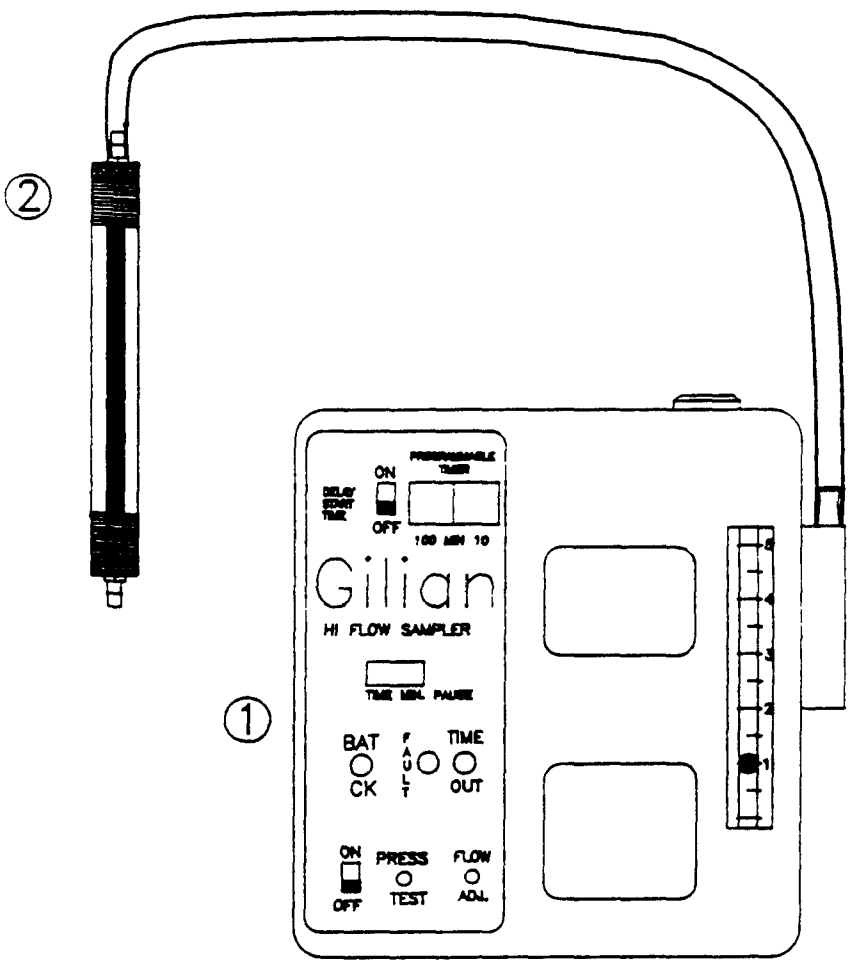

1. PERSONAL SAMPLING PUMP
2. CHARCOAL TUBE - STRAIGHT

Figure 22: Carbon Sampling, Single Manifold

SOP #2051

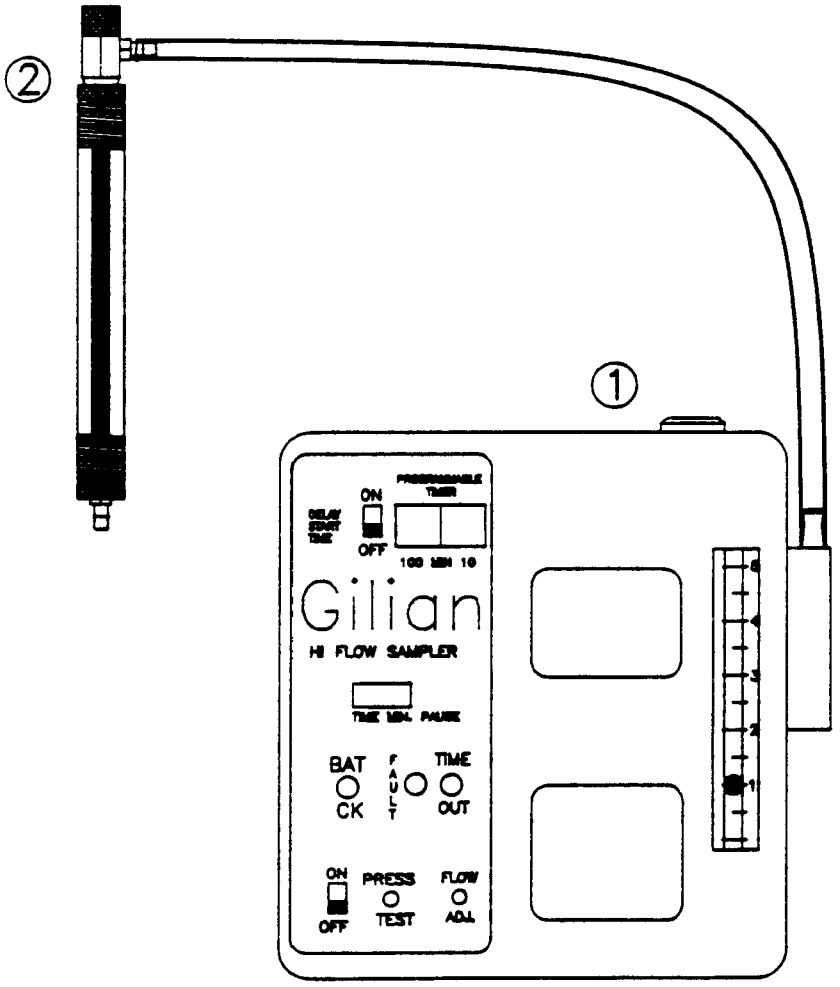

1. PERSONAL SAMPLING PUMP
2. CHARCOAL TUBE SINGLE MANIFOLD (600mg or 150mg)

Figure 23: Tenax Calibration with a Secondary Calibrator

SOP #2052

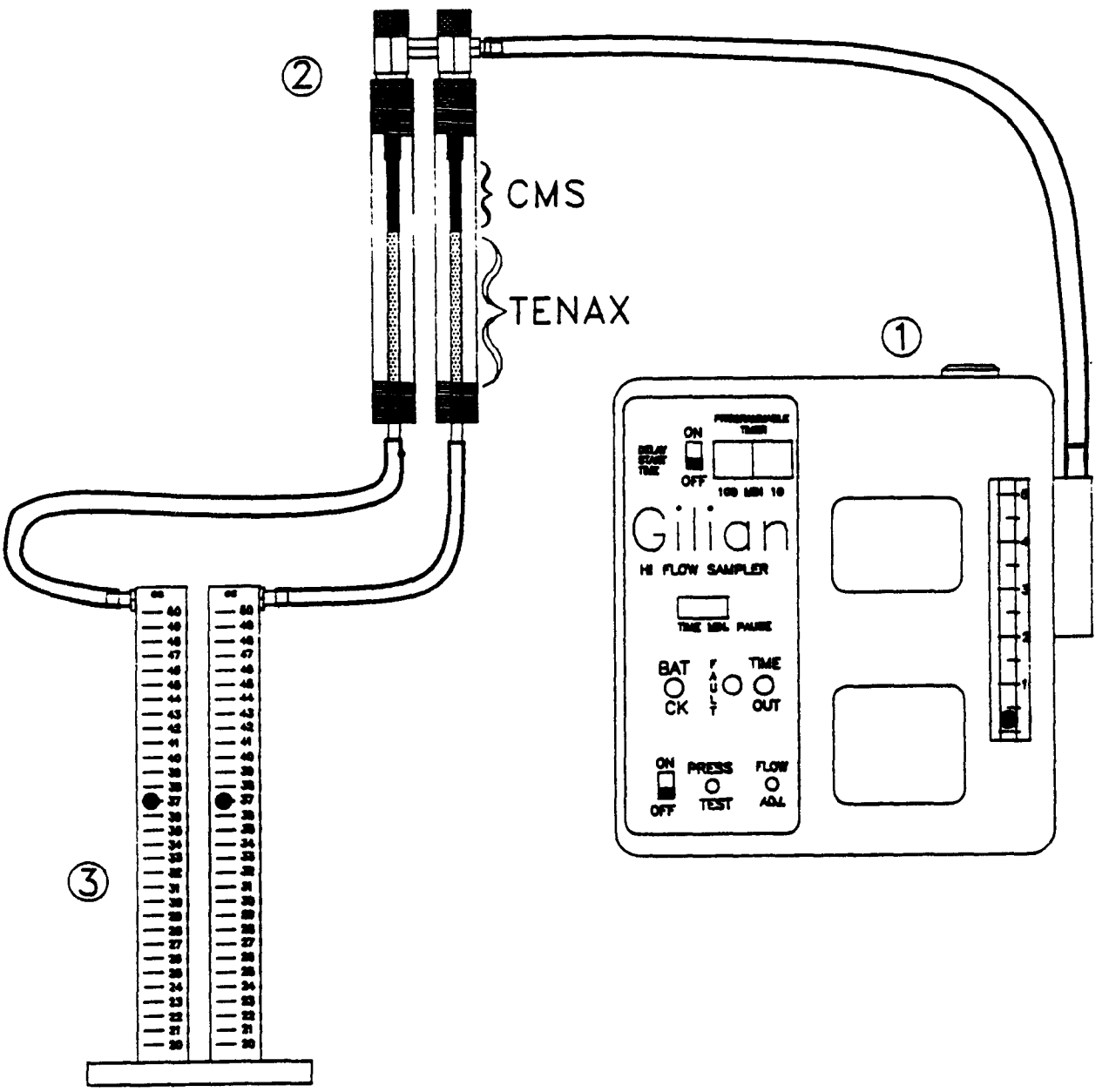

1. PERSONAL SAMPLING PUMP
2. TENAX/CMS TUBE WITH DOUBLE MANIFOLD
3. DOUBLE ROTAMETER

Figure 24: Tenax/CMS Sampling Train

SOP #2052

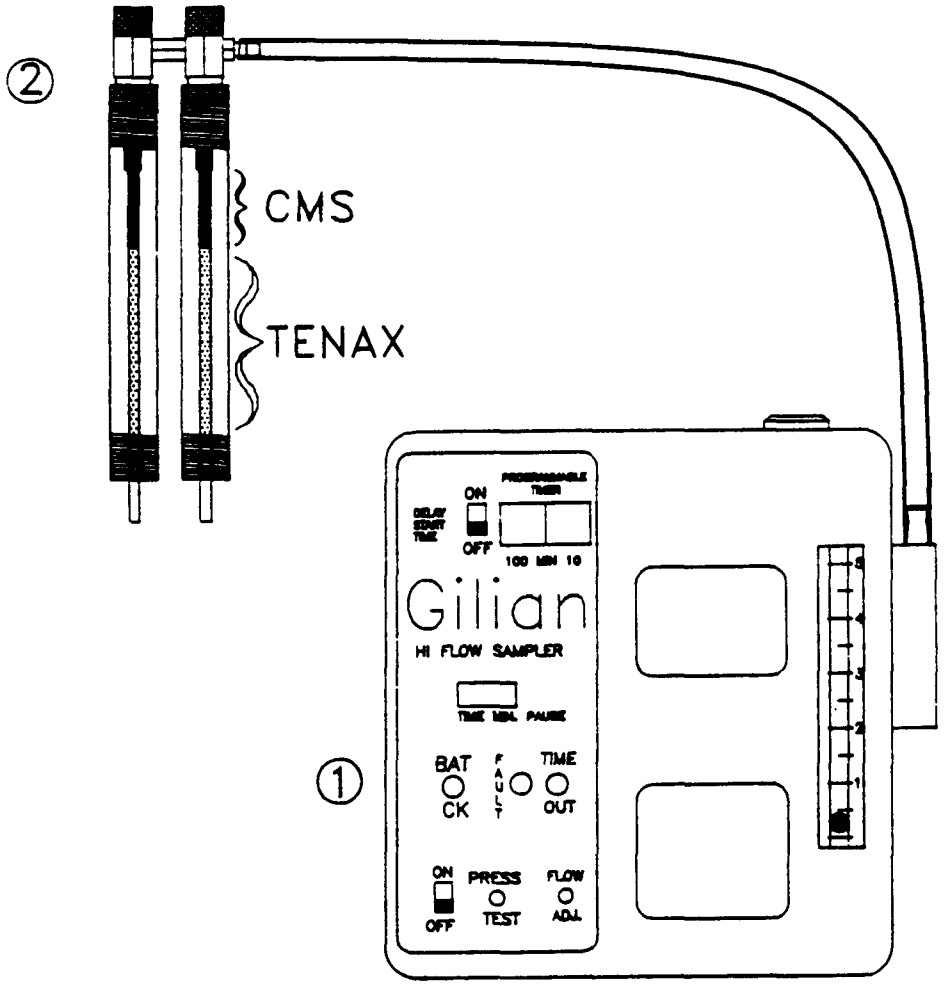

1. PERSONAL SAMPLING PUMP
2. TENAX/CMS TUBE WITH DOUBLE MANIFOLD

Figure 25: Manometer

SOP #2069

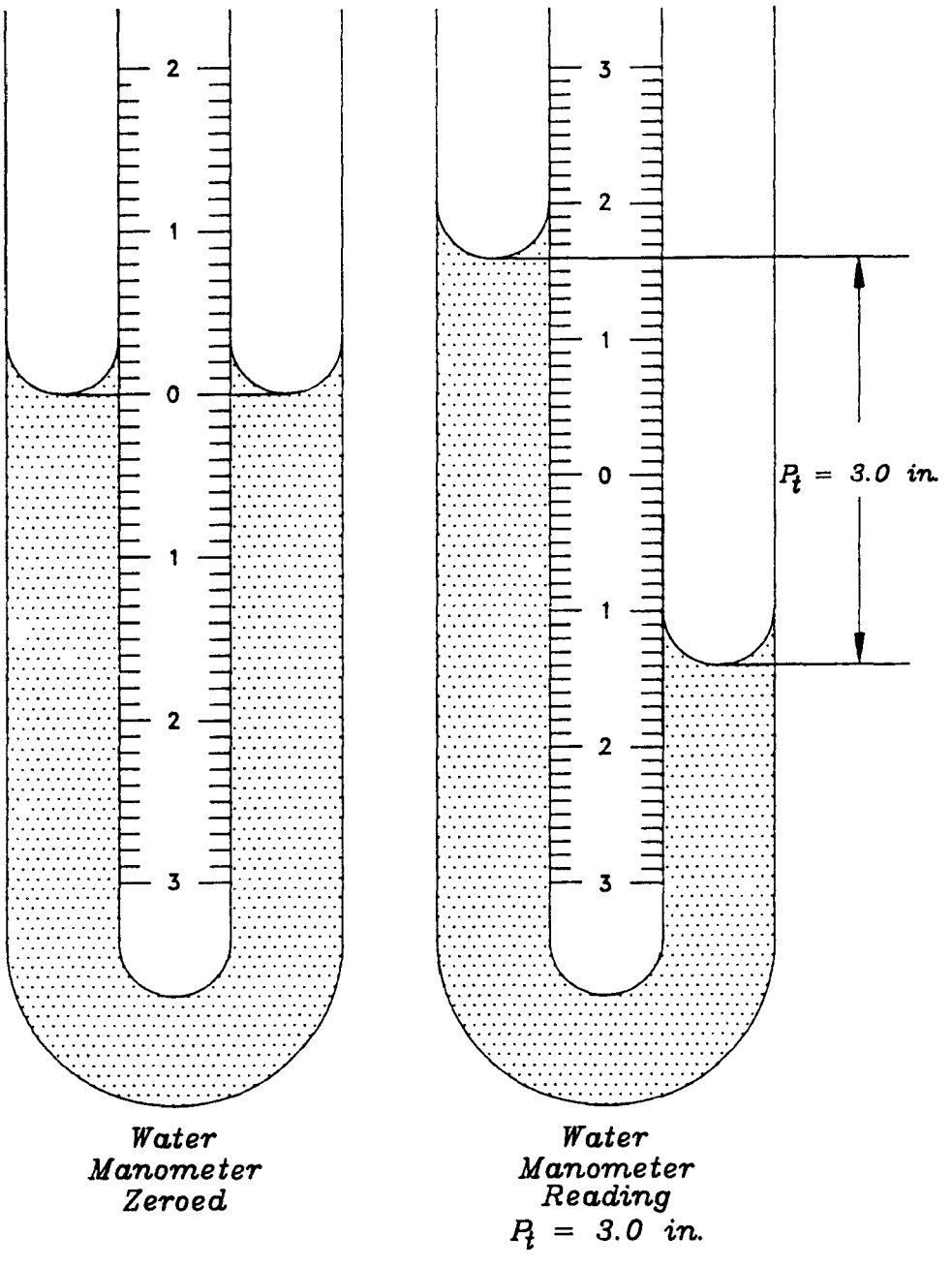

Figure 26: Canister Sampling Module

SOP #2069

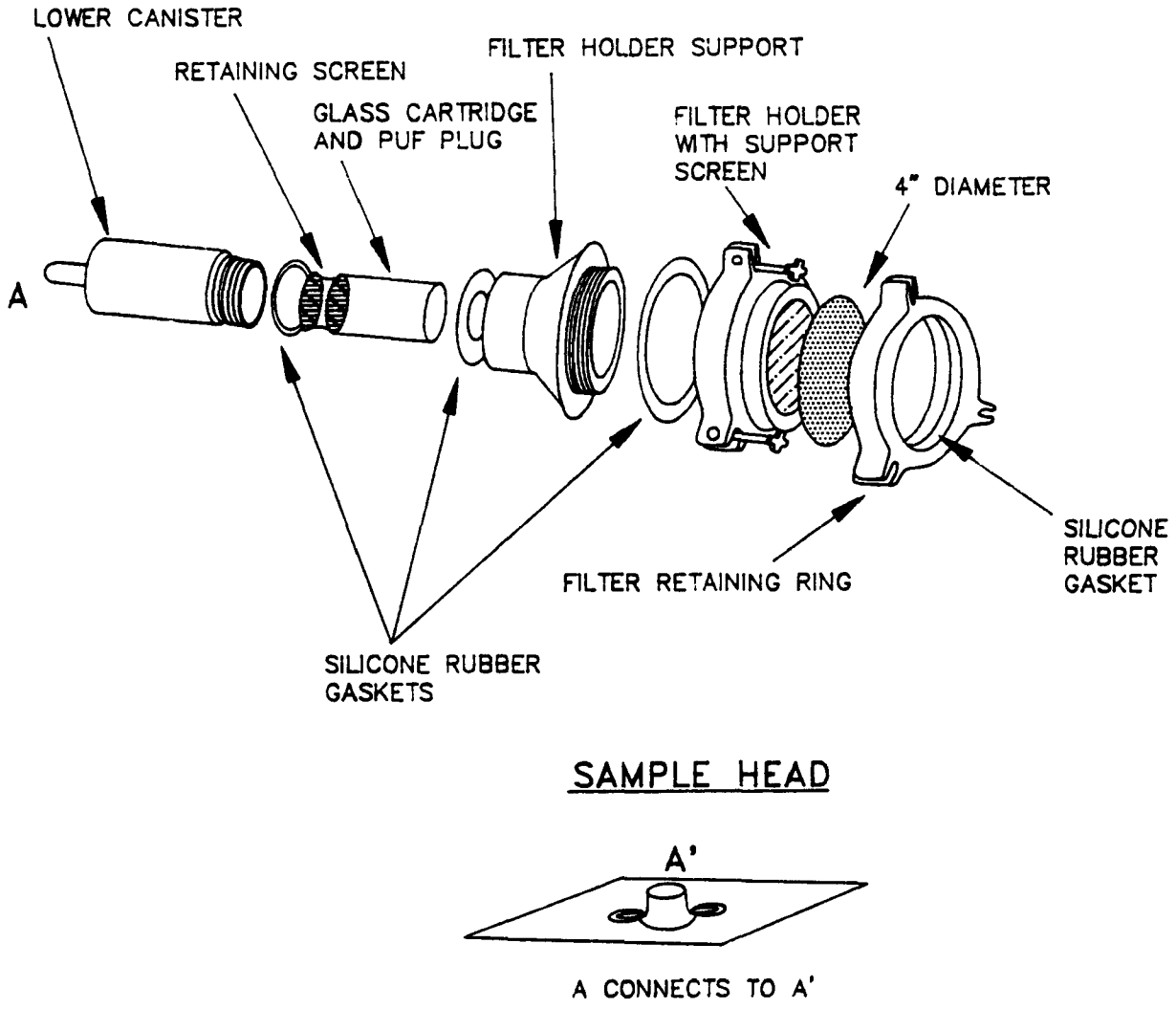

Figure 27: High Volume PUF Sampler

SOP #2069

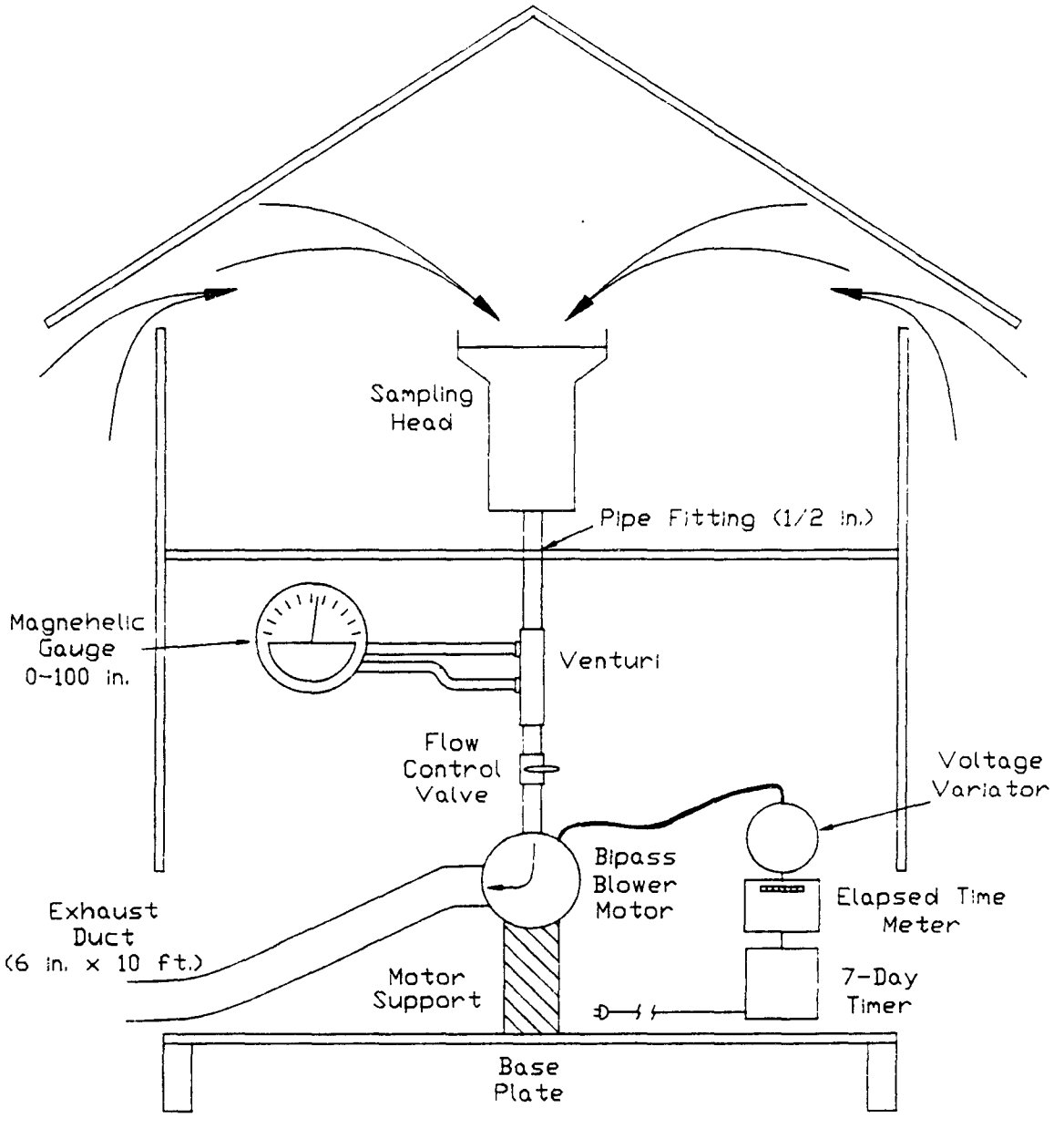

APPENDIX B

Canister Sampling Field Data Sheet

Canister Sampling Field Data Sheet

SOP #1704

A. GENERAL INFORMATION	
SITE ID:	SHIPPING DATE:
SITE ADDRESS:	CANISTER SERIAL NO.:
	SAMPLER ID:
	OPERATOR:
SAMPLING DATE:	CANISTER LEAK CHECK DATE:

B. SAMPLING INFORMATION				
PARAMETER	START	STOP	MAXIMUM	MINIMUM
LOCAL TIME			NA	NA
ELAPSED TIME METER READING			NA	NA
INTERIOR TEMPERATURE				
AMBIENT TEMPERATURE				
CANISTER PRESSURE				
MANIFOLD FLOW RATE				
CANISTER FLOW RATE				
FLOW CONTROLLER READOUT			NA	NA
SAMPLING SYSTEM CERTIFICATION DATE:				
QUARTERLY RECERTIFICATION DATE:				

C. LABORATORY INFORMATION		
DATE RECEIVED:	INITIAL PRESSURE:	
RECEIVED BY:	FINAL PRESSURE:	
DILUTION FACTOR:		
INSTRUMENT	ANALYSIS DATE	ANALYSIS RESULT
GC-FID-ECD		
GC-MSD-SCAN		
GC-MSD-SIM		
ADDITIONAL RESULTS/COMMENTS:		
SIGNATURE/TITLE:		

References

American Society of Testing Materials. 1988. Annual Book of ASTM Standards, Volume 11.03. Method D1356-73A -- Standard Definitions of Terms Relating to Atmospheric Sampling and Analysis.

Dayton, D. P. and JoAnn Rice. November 1987. Development and Evaluation of a Prototype Analytical System for Measuring Air Toxics, Final Report. U.S. EPA. Environmental Monitoring Systems Laboratory, Research Triangle Park, NC. EPA Contract #68-02-3990.

Gilian Instrument Corporation. 1983. Instruction Manual for Hi Flow Sampler: HFS113, HFS113T, HFS113U, HFS113UT.

Holdren M. W. and D. L. Smith. January 1986. Stability of Volatile Organic Compounds While Stored in SUMMA Polished Stainless Steel Canisters, Final Report. U.S. EPA, Research Triangle Park, NC.

Keyes, D. L., B. P. Price, and J. Chesson. June 1985. Guidance for Controlling Asbestos-Containing Materials in Buildings. U.S. EPA. Office of Pesticides and Toxic Substances, Batelle Columbus Labs, Washington DC. EPA/560/5-85/024.

Longbottom, James E. and James J. Lichtenberg. 1982. 40 CFR 136, Appendix A. Methods for Organic Chemicals Analysis of Municipal and Industrial Wastewater, Method 624 - Purgeables. EPA/600/4-82/057. EMSL. Cincinatti, OH.

McClenny, W. A. and J. D. Pleil. June 24-29, 1984. Automated Calibration and Analysis of VOCs with a Capillary Column Gas Chromatograph Equipped for Reduced Temperature Trapping. Proceedings of the 1984 Air Pollution Control Association Annual Meeting, San Francisco, CA.

McClenny, W. A., J. D. Pleil, J. W. Holdren and R. N. Smith. 1984. Automated Cryogenic Preconcentration and Gas Chromatographic Determination of Volatile Organic Compounds. *Anal. Chem.* 56:29-47.

McElroy, F. F., V. L. Thompson, and H. G. Richter. August 1985. A Cryogenic Preconcentration -- Direct FID (PDFID) Method for Measurement of NMOC in the Ambient Air. U.S. EPA. Research Triangle Park, NC. EPA/600/4-85/063.

National Institute for Occupational Safety and Health. 1990 Supplement. NIOSH Manual of Analytical Methods, Third Edition. NIOSH Method 1501, Aromatic Hydrocarbons. U.S. Gov.'t Printing Office, Washington, DC. Eiler, Peter M., ed.

National Institute for Occupational Safety and Health. 1990 Supplement. NIOSH Manual of Analytical Methods, Third Edition. NIOSH Method 1500, Hydrocarbons, BP 36-126°C. U.S. Gov.'t Printing Office, Washington, DC. Eiler, Peter M., ed.

National Institute for Occupational Safety and Health. 1990 Supplement. NIOSH Manual of Analytical Methods, Third Edition. NIOSH Method 1003, Halogenated Hydrocarbons, U.S. Gov.'t Printing Office, Washington, DC. Eiler, Peter M., ed.

New Jersey Department of Environmental Protection, Division of Hazardous Site Mitigation. 1988. Field Sampling Procedures Manual.

Oliver, K. D. and J. D. Pleil. 1985. Automated Cryogenic Sampling and Gas Chromatographic Analysis of Ambient Vapor-Phase Organic Compounds: Procedures and Comparison Tests. Northrop Services Inc. - Environmental Sciences (NSI-ES). TN-4120-85-02.*

Oliver, K. D. and J. D. Pleil. 1987. Analysis of Canister Samples Collected During the CARB Study in August 1986. NSI-ES. TN-4420-87-02.*

Pleil, J. D. 1982. Automated Cryogenic Sampling and Gas Chromatographic Analysis of Ambient Vapor-Phase Organic Compounds: System Design. NSI-ES.*

Pleil, J. D. and K. D. Oliver. 1985. Evaluation of Various Configurations of Nafion Dryers: Water Removal from Air Samples Prior to Gas Chromatographic Analysis. NSI-ES. TN-4120-85-03.*

Pleil, J. D. and K. D. Oliver. 1987. Measurement of Concentration Variability of Volatile Organic Compounds in Indoor Air: Automated Operation of a Sequential Syringe Sampler and Subsequent GC/MS Analysis. NSI-ES. TN-4420-87-01.*

Rasmussen, R. A. and M. A. K. Khalil. Atmospheric Halocarbon: Measurements and Analysis of Selected Trace Gases. Proceedings from NATO ASI on Atmospheric Ozone. BO: 209-231.

Riggin, Ralph M. 1986. Compendium of Methods for the Determination of Toxic Organic Compounds in Ambient Air. U.S. EPA. Research Triangle Park, NC. EPA/600/4-84/041

Riggin, Ralph M. 1983. Technical Assistance Document for Sampling and Analysis of Toxic Organic Compounds in Ambient Air. U.S EPA. Research Triangle Park, NC. EPA/600/4-83/027.

Roy F. Weston, Incorporated. 1987. Weston Instrumentation Manual, Volume I.

U.S. EPA. Office of Emergency and Remedial Response. May 1990. Environmental Asbestos Assessment Manual. Superfund Method for the Determination of Asbestos in Ambient Air. Interim Version. Part 1: Method. Part 2: Technical Background Document. EPA/540/2-90/005a, EPA/540/2-90/0056.

U.S. EPA. Office of Research and Development. 1988. Methods for the Determination of Organic Compounds in Drinking Water, Method 524.2. EPA/600/4-88/039.

U.S. EPA. Research Triangle Park, NC. May 1988. The Determination of Volatile Organic Compounds (VOCs) on Ambient Air Using SUMMA Passivated Canister Sampling and Gas Chromatograph Analysis, Compendium Method T0014.

U.S. EPA. September 1986 Supplement. Compendium of Methods for the Determination of Toxic Organic Compounds in Ambient Air. Method TO-14 -- Determination of Volatile Organic Compounds (VOCs) in Ambient Air Using SUMMA Canister Sampling and Gas Chromatographic Analysis. EPA/600/4-87/006.

U.S. EPA. Office of Air Quality Planning and Standards. June 1986. Portable Instrument User's Manual for Monitoring VOC Sources. EPA/340/1-88/015.

U.S. EPA. Office of Emergency and Remedial Response, Hazardous Response Support Division, Environmental Response Team. January 1985. Field Standard Operating Procedures (FSOP) #8 Air Surveillance. (Under Revision). OSWER directive 9285.2-03.

---

* Available through ManTech Environmental Technology Inc., Research Triangle Park, NC, (919) 549-0611.

U.S. EPA. Office of Pesticides and Toxic Substances. December 1984. Compendium of Methods for Determination of Toxic Organic Compounds in Ambient Air. EPA/600/4-84/041.

U.S. EPA. December 1984. Characterization of Hazardous Waste Sites -- A Methods Summary: Volume II, Available Sampling Methods, 2nd Edition. EPA/600/4-84/076.

U.S. EPA. 1977. Reference Method for the Determination of Suspended Particulates in the Atmosphere (High Volume Method). EPA/600/4-77/027a.

U.S EPA. Standard Operating Procedure for Preparation of Clean Tenax Cartridges. EMSL/RTP-SOP-EMD-013.

Walling, J. F., J. E. Bumgarner, J. D. Drisoll, C. M. Morris, A. E. Riley, and L. H. Wright. 1986. Apparent Reaction Products Desorbed From Tenax Used to Sample Ambient Air. *Atmospheric Environ.* 20:51-57.

Winberry, W. T. and N. V. Tilley. 1986. Supplement to EPA/600/4-84/041: Compendium of Methods for the Determination of Toxic Organic Compounds in Ambient Air. U.S. EPA. Research Triangle Park, NC. EPA/600/4-87/006.

* U.S. G.P.O.:1992-311-893:60701