United States
Environmental Protection
Agency

Office of
Water Program Operations
(WH-595)
Washington, D.C. 20460

Reprint of
Department of the Army
EM 1110-2-501
September 1978
EPA/430/9-79-008

Water

EPA

Design of Wastewater Treatment Facilities Major Systems

DEPARTMENT OF THE ARMY
Office of the Chief of Engineers
Washington, D.C. 20314

EM 1110-2-501
Part 1 of 3

DAEN-CWE-BU

Engineer Manual
No. 1110-2-501

29 September 1978

ENGINEERING AND DESIGN
Design of Wastewater Treatment Facilities
Major Systems

1. Purpose. Part One of this manual provides guidance for the selection of wastewater treatment systems and processes and criteria for the design of wastewater treatment facilities.

2. Applicability. The provisions of this manual are applicable to Corps of Engineers Divisions and Districts concerned with the planning, design, and optimization of new and upgraded wastewater treatment facilities for Civil Works, and for the preparation of documents for wastewater management programs.

3. General. In 1972 the Corps of Engineers became a full partner, along with other Federal agencies, in Urban Area Comprehensive Planning organized by the state and local governments. The Corps of Engineers was given the authority for studying water problems in urban areas in addition to its traditional sanitary sciences role at recreation sites, and for providing information valuable to state and local governments for making grant applications. These governments have the responsibility for relating urban water problems, such as flood control, water supply, and wastewater management to other urban problems, such as neighborhood renewal, recreation, and transportation. This new responsibility emphasizes the need for in-depth, and sound plans and designs for wastewater treatment facilities. This manual is intended to provide design and cost criteria on which logical choices for urban wastewater treatment plants may be made.

FOR THE CHIEF OF ENGINEERS:

for Thomas J. Waddell, LTC
THORWALD C. PETERSON
Colonel, Corps of Engineers
Executive Director, Engineer Staff

U.S. Environmental Protection Agency
Region V, Library
230 South Dearborn Street
Chicago, Illinois 60604

U.S. Environmental Protection Agency

DEPARTMENT OF THE ARMY
Office of the Chief of Engineers
Washington, D. C. 20314

EM 1110-2-501
Part 1 of 3

DAEN-CWE-S

Engineer Manual
No. 1110-2-501

29 September 1978

Engineering and Design
DESIGN OF WASTEWATER TREATMENT FACILITIES
MAJOR SYSTEMS

Table of Contents

Subject		Page
CHAPTER 1.	INTRODUCTION	1-1
CHAPTER 2.	CHARACTERIZATION OF WASTEWATER FOR URBAN AREAS	2-1
CHAPTER 3.	DESIGN CONSIDERATIONS	3-1
CHAPTER 4.	DESIGN AND EVALUATION OF PROCESSES AND SYSTEMS	4-1
CHAPTER 5.	PHYSICAL UNIT PROCESSES	
Section I.	INTRODUCTION	5-1
Section II.	GRIT REMOVAL	5-3
Section III.	SCREENING	5-19
Section IV.	COMMINUTION	5-29
Section V.	EQUALIZATION	5-33
Section VI.	FLOTATION	5-41
Section VII.	THICKENING (Gravity)	5-57
Section VIII.	SEDIMENTATION (Primary Clarifier)	5-67
Section IX.	SEDIMENTATION (Secondary Clarifier)	5-83
Section X.	FILTRATION	5-93
Section XI.	VACUUM FILTRATION	5-119
Section XII.	CENTRIFUGATION	5-131
Section XIII.	MICROSCREENING	5-139
Section XIV.	DRYING BEDS	5-149

Subject		Page
Section XV.	POSTAERATION	5-159
Section XVI.	SLUDGE HAULING AND LANDFILLING	5-169
Section XVII.	MULTIPLE-HEARTH INCINERATION	5-177
Section XVIII.	FLUIDIZED BED INCINERATION	5-189
CHAPTER 6.	CHEMICAL UNIT PROCESS	
Section I.	INTRODUCTION	6-1
Section II.	CARBON ADSORPTION	6-3
Section III.	CHEMICAL COAGULATION	6-17
Section IV.	AMMONIA STRIPPING	6-25
Section V.	CHLORINATION	6-35
Section VI.	ION EXCHANGE	6-43
Section VII.	NEUTRALIZATION	6-55
Section VIII.	RECARBONATION	6-61
Section IX.	TWO-STAGE LIME TREATMENT	6-69
CHAPTER 7.	BIOLOGICAL UNIT PROCESSES	
Section I.	INTRODUCTION	7-1
Section II.	TRICKLING FILTERS	7-3
Section III.	PLUG FLOW ACTIVATED SLUDGE	7-13
Section IV.	COMPLETE MIX ACTIVATED SLUDGE	7-37
Section V.	STEP AERATION ACTIVATED SLUDGE	7-69
Section VI.	EXTENDED AERATION ACTIVATED SLUDGE	7-95
Section VII.	MODIFIED OR HIGH-RATE AERATION ACTIVATED SLUDGE	7-129
Section VIII.	CONTACT STABILIZATION ACTIVATED SLUDGE	7-151
Section IX.	PURE OXYGEN ACTIVATED SLUDGE	7-171
Section X.	AERATED AEROBIC LAGOONS	7-205
Section XI.	AERATED FACULTATIVE LAGOONS	7-223

	Subject	Page
Section XII.	OXIDATION DITCH	7-235
Section XIII.	NITRIFICATION-DENITRIFICATION	7-253
Section XIV.	AEROBIC DIGESTION	7-277
Section XV.	ANAEROBIC DIGESTION	7-291
Section XVI.	STABILIZATION PONDS	7-307
CHAPTER 8.	COST DATA AND ECONOMIC ANALYSIS	
Section I.	INTRODUCTION	8-1
Section II.	PHYSICAL UNIT PROCESSES	8-5
Section III.	CHEMICAL UNIT PROCESSES	8-13
Section IV.	BIOLOGICAL UNIT PROCESSES	8-17
APPENDIX A.	REFERENCES	A-1
APPENDIX B.	ABBREVIATIONS	B-1
APPENDIX C.	CONVERSION FACTORS FOR UNITS OF MEASUREMENT; DISSOLVED-OXYGEN SOLUBILITY DATA; PHYSICAL PROPERTIES OF WATER; CHEMICAL ELEMENTS AND SUBSTANCES; SPECIFIC WEIGHT	C-1
GLOSSARY		Glossary 1
INDEX		Index 1

CHAPTER 1

INTRODUCTION

1-1. Purpose. Part One of this manual provides guidance for the selection of wastewater treatment systems and processes and criteria for the design of wastewater treatment facilities.

1-2. Applicability. The provisions of this manual are applicable to Corps of Engineers Districts and Divisions concerned with the planning, design, and optimization of new and upgraded wastewater treatment facilities for Civil Works, and for the preparation of documents for wastewater management programs.

1-3. References. See Appendix A for a list of selected references.

1-4. General Considerations.

a. In 1972 the Corps of Engineers became a full partner, along with other Federal agencies, in Urban Area Comprehensive Planning organized by the state and local governments. The Corps of Engineers was given the authority for studying water problems in urban areas in addition to its traditional sanitary sciences role at recreation sites, and for providing information valuable to state and local governments for making grant applications. These governments have the responsibility for relating urban water problems, such as flood control, water supply, and wastewater management to other urban problems, such as neighborhood renewal, recreation, and transportation. This new responsibility emphasizes the need for in-depth, and sound plans and designs for wastewater treatment facilities. This manual is intended to provide design and cost criteria on which logical choices for urban wastewater treatment plants may be made.

b. The Corps of Engineers executes the Urban Studies Program in a manner consistent with two basic principles:

(1) The responsibility for, and leadership of, urban area comprehensive planning is vested in state and local governments; and

(2) Duplication or conflict among Federal, state, regional, and local agencies participating in urban area comprehensive planning is to be avoided.

c. The Corps of Engineers' responsibility for planning, optimizing, and integrating selected treatment plant designs with other regional water resource priorities is directed toward meeting the goals set forth in the 1972 Amendments to the Federal Water Pollution Control Act (PL 92-500).

d. Wastewater composition in urban/regional areas includes wastes that are: (1) domestic in nature; (2) generally domestic with some industrial; (3) primarily industrial; (4) primarily agricultural runoff; (5) urban storm water runoff; or (6) combinations of the above.

1-5. Problems. Some of the problems associated with designing adequate wastewater treatment facilities for metropolitan areas are:

a. The composition and relative level of enforcement of wastewater standards and criteria vary substantially from state to state and along different waterways and may exceed the requirements of PL 92-500.

b. Appropriate technical design guidance either has not been available or is inadequate for certain systems or subsystems, and, in some instances, existing guidance may contribute to operational problems.

c. Flow rates and composition of discharged waste vary widely.

d. Requirements demand aesthetic quality be considered in site selection, design, construction, and operational practices.

e. A high degree of treatment is often required (up to and including advanced wastewater treatment standards).

f. Characterization of raw, primary, and secondary waste treatment systems in some areas is generally inadequate to support a comprehensive planning process for the area.

g. Data from recent and current research activities and from specific design problems in the field have not yet been correlated to yield the maximum benefit.

1-6. Use of the Manual.

a. This manual is arranged in three parts so that the planner or designer will have quick access to data for many wastewater treatment processes both for the design of new treatment facilities and for the checking and optimization of existing facilities. Subsequent chapters

of Part One of this manual include design equations for waste treatment processes; systems for computing costs and estimating the overall efficiency of selected processes for major wastewater treatment facilities. Part Two addresses those problems unique to the recreation area planner and provides characterization and designs for "Small Scale Wastewater Treatment Systems." To further aid planners and designers, a computer aided design program (CAPDET) is available incorporating the design methodology encompassed by Parts One and Two of this manual plus land treatment. This program is currently running on the Waterways Experiment Station GE-600 computer. The user guide for the CAPDET program is Part Three of this manual.

b. This part of the manual serves to familiarize the designer with the practical and theoretical aspects of physical, chemical, and biological processes and process trains for urban-type facilities ranging from simple to complex systems, including tertiary systems for nutrient removal. A table of factors for converting U. S. customary units of measurement to metric (SI) units, a chart containing the physical properties of water, and a glossary are appended hereto for the convenience of the user.

c. It should be recognized that the effects of scale are severe limitations when dealing with physical-biologic systems such as those found in wastewater treatment. This is especially true when small facilities are being considered such as those required for very small communities or intermittent-use systems such as those found at Corps' recreational sites. In these cases, where physical units become very small and operators are not on the plant site continuously, many of the more sophisticated unit process designs described in this manual are not applicable. The user is referred to Part Two of the manual which deals with small-scale wastewater management when faced with problems of this scope.

CHAPTER 2

CHARACTERIZATION OF WASTEWATER FOR URBAN AREAS

2-1. General. Water usage rates, wastewater production rates, and wastewater characterization data for domestic sewage have been documented for urban area design. These rates and qualities are representative of the "average" city and are subject to the engineer's knowledge of the area for their intelligent application. Needless to say, no table of statistical values is a good substitute for field data. However, the information presented in this chapter will allow the engineer to prepare a first-look design and obtain rudimentary cost data for the area. Subsequent iterations in the planning process demand that these average values be replaced with site-specific values.

2-2. Selection of Urban Area Flow Design Parameters.

a. Total Waste Flow.

(1) One of the most important parameters required for the effective and realistic planning of any community sanitary facility is flow. Flow is the major determinant of size, location, and public acceptance of any plant. Unfortunately, flow may frequently be the most elusive parameter to forecast. Many factors dramatically affect the flow reading of a waste treatment facility; among these are (a) geographical location, (b) type of users (e.g., residential, industrial, agricultural, etc.), (c) sewer inflow, infiltration, and exfiltration, (d) consumptive uses (e.g., lawn watering, car washing, etc.), (e) storm event history, and (f) precipitation and resulting runoff.

(2) Metcalf and Eddy have found that between 60 and 80 percent of the per capita consumption of water will become sewage. Based on studies by the U. S. Public Health Service for the Select Committee on Natural Water Resources published in 1960, the average water consumption on a national basis was found to be approximately 147 gallons per capita per day (gpcd). This therefore represents an average wastewater flow from 88 to 118 gpcd or about the 100-gpcd figure so frequently reported in the literature. It should again be emphasized that this value represents only an average value which must be used with caution. An increase of only 1 gpcd in a city the size of Kansas City can amount to over $500,000 in capital and $150,000/year in operation and maintenance (O-M) costs.

b. Flow Variations. In addition to the average flow, the designer

must be cognizant of the maximum and minimum flows. The design of many unit processes is based on a knowledge of peak flows, while the design of others is based on minimum flows. Table 2-1 provides some comparisons found by Clark and Viessman in their research on domestic flow fluctuations. Additional references to flow variations are given in sections 4-3, 4-4, 4-6, 9-c(1)(2), 9-b, 10-f(2), and Technical Manual No. 5 - 814-3, "Domestic Wastewater Treatment."

c. Inflow/Infiltration. The terms "inflow" and "infiltration" are used to describe flows into the sanitary sewer system from sources other than normal sewage connections. Inflow refers to connections of wastewater to the system which may not be septic in the biologic sense of the term. Such connections include roof drains, parking lot drains, misconnected storm water laterals, etc. Most inflows provide low pollutant levels with relatively high volume quantities. This water is excessively expensive to reclaim in the sanitary system and normally is better disposed of by other means. Frequently nonstructural solutions (e.g., sewer ordinances) are required to deal with areas of excessive inflows. On the other hand, infiltration refers to the inward seepage of groundwater into the collection system. The volume of such infiltration is a direct function of the length, size, and condition of the collection system as well as the depth of the groundwater. According to Environmental Protection Agency (EPA) guidelines, inflow/infiltration below 1000 gpd per inch diameter of pipe per mile is nonexcessive. Current EPA procedure is to determine if inflow/infiltration is excessive to a point where it is more cost-effective to replace and/or rehabilitate than to continue to transport and treat.

2-3. Selection of Urban Area Wastewater Quality. Like flow, the quality of raw sewage fluctuates from region to region. Table 2-2 gives a set of typical characteristics of domestic sewage representative of most urban areas. It must likewise be realized that heavy industrial or commercial loadings can have a dramatic effect on the values listed.

Table 2-1. Residential Sewage Flows as Ratios to the Average

Flow	Ratio
Maximum daily	2.25 to 1
Maximum hourly	3.00 to 1
Minimum daily	0.67 to 1
Minimum hourly	0.33 to 1

Table 2-2. Typical Characteristics of Domestic Sewage (mg/ℓ unless noted otherwise)

Parameter	Amount		
	High	Average	Low
BOD_5	350	200	100
COD	800	400	200
TOC	300	200	100
pH (units)	7.5	7.0	6.5
Total solids	1200	700	400
Suspended, total	350	200	100
Fixed	100	50	25
Volatile	250	150	75
Dissolved, total	850	500	300
Fixed	500	300	200
Volatile	350	200	100
Settleable solids (mℓ/ℓ)	20	10	5
Total nitrogen (as N)	60	40	20
Free ammonia (as NH_3)	30	15	10
Total phosphorus (as P)	20	10	5
Chlorides (as Cl)	150	100	50
Sulfates (as SO_4)	40	20	10
Alkalinity (as $CaCO_3$)	350	225	150
Grease	150	100	50

CHAPTER 3

DESIGN CONSIDERATIONS

3-1. Design Factors. Factors that must be considered in the preparation of a design of a wastewater treatment facility may be subdivided into site and system selection factors.

a. Site Selection.

(1) Distribution of facilities.

(2) Topography.

(3) Vegetation.

(4) Soil type--permeability and chemical composition.

(5) Groundwater elevation and location of aquifers.

(6) Distance to and condition of bedrock.

(7) Proximity to surface waters.

(8) Land availability and cost.

(9) Stream water quality designation.

(10) Sludge disposal opportunities.

(11) Collection system accessibility.

(12) Proximity to human nabitation.

b. System Selection.

(1) Governing criteria--legal and political.

(2) Number and types of facilities to be served.

(3) Energy requirements and availability.

(4) Capital cost of system.

(5) Operation and maintenance costs.

(6) Number and types of operating personnel required.

(7) Wastewater characteristics and flows.

(8) Level of odors, noise, and insects.

(9) Acceptability of aesthetics.

(10) Flexibility of system.

(11) Aesthetic and social concerns.

(12) Climate--seasonal variation.

3-2. Design Steps. The principal phases of design can be subdivided into four steps: site selection, determination of waste flows and strengths, and system selection.

a. Site Selection. Site selection includes a review of the technical and aesthetic factors listed in paragraph 3-1a.

b. Calculation of Flows. The calculation of wastewater flows to a treatment facility was discussed in Chapter 2.

c. Calculation of Waste Strength. The strength of waste from most domestic sources is known (Table 2-2) and was discussed in Chapter 2.

d. System Selection. Once a site has been selected and waste flows and strengths have been estimated, the process of selecting/designing a treatment facility can begin. This process includes a review of the system selection factors (para 3-1b) and a mathematical analysis of one or more waste treatment systems. At this point, a computer-based design procedure may be used to design a system or to review the feasibility of one or more recommended systems. Otherwise, the designer may independently design a system, exercising his professional judgment in the selection of processes to be considered, and manually compute the size and operational characteristics of the system.

CHAPTER 4

DESIGN AND EVALUATION OF PROCESSES AND SYSTEMS

4-1. Factors Determining Process Selection. Selection of a process train (combination of processes) for wastewater treatment will depend on a variety of factors including:

a. Stream standards and/or receiving water quality.

b. Federal, state, and local effluent criteria.

c. Wastewater characteristics.

d. Economics.

e. Availability of fuel and/or electric power.

f. Specific exclusions of certain processes.

g. Possible requirements for future expansion and/or upgrading.

4-2. Process Substitution Diagram. The process substitution diagram (fig. 4-1) is useful in system design and evaluation. In practice, the diagram is entered from the left and the designer may select processes for preliminary, primary, secondary, tertiary, and/or sludge treatment according to specific needs. For a given set of wastewater characteristics, there may be 30 or more viable treatment processes; a complete treatment system may employ from 1 to 10 processes. Thus, there are literally thousands of possible combinations and it is virtually impossible for an individual designer or design team to evaluate all viable processes and combinations of processes without the aid of the computer. To limit the amount of evaluation required, the designer must rely heavily on experiences and examples set by others to select processes or eliminate certain processes from consideration. This practice places a great burden on the designer and occasionally results in designs that are far from an economic optimum.

4-3. Process Design. Specific design equations and practices for 40 chemical, physical, and biological unit processes are given in Chapter 5. The coverage of each process includes the following:

a. Background data.

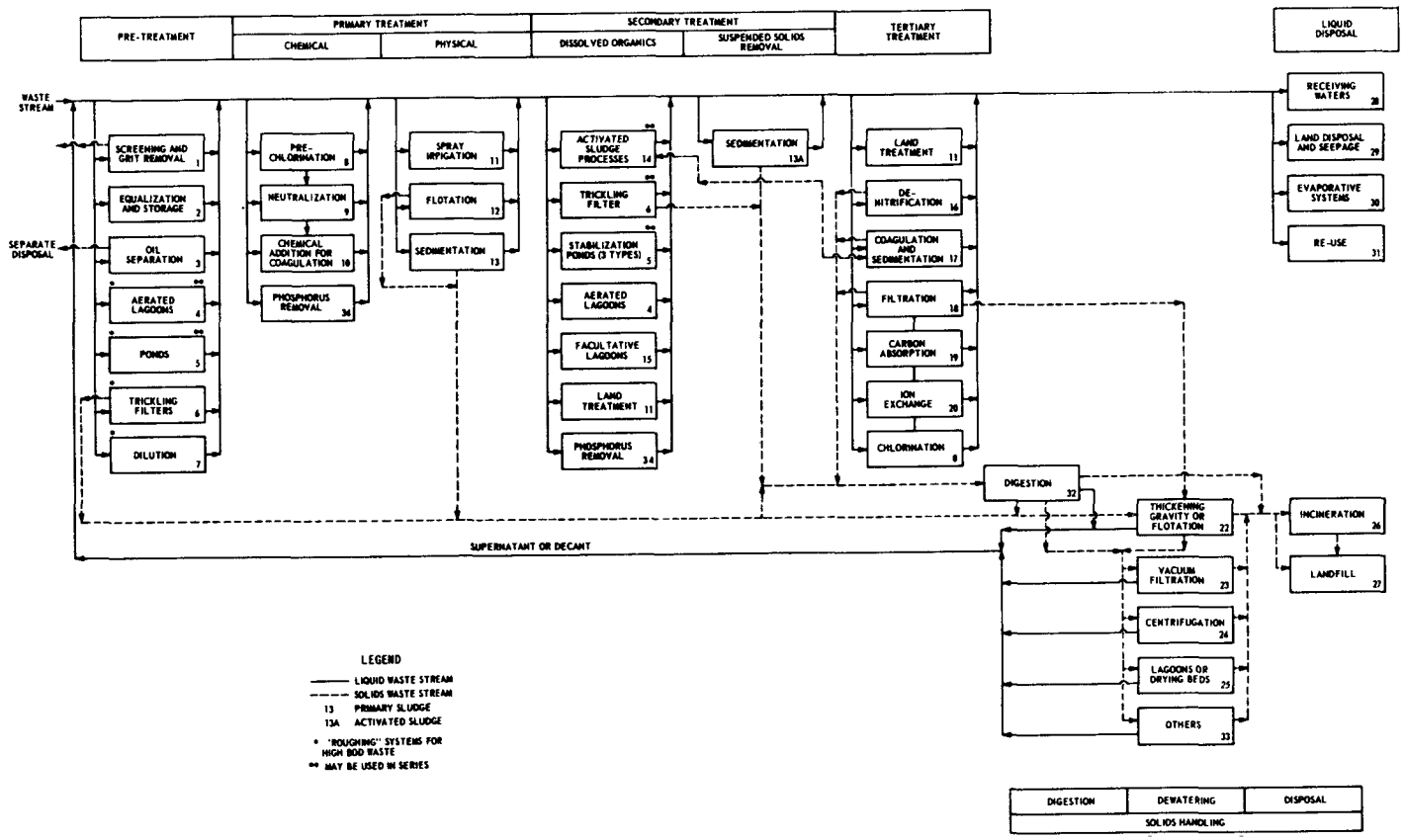

Figure 4-1. Wastewater treatment sequence processes substitution diagram.

b. Input data requirements.

c. Design parameters (normal operating ranges).

d. Design procedures.

e. Output data.

f. Example calculations.

g. Bibliography.

4-4. Economic Analysis. The user is referenced to Chapter 8 for a discussion on cost estimating and economic analysis of wastewater treatment facilities.

4-5. Bibliography.

a. U. S. Environmental Protection Agency, "Guidance for Facilities Planning," Jan 1974, Washington, D. C.

b. Water Resources Council, "Water and Related Land Resources, Establishment of Principles and Standards for Planning," Federal Register, Vol 38, No. 174, Sep 1973, pp 24778-24869.

CHAPTER 5

PHYSICAL UNIT PROCESSES

Section I. INTRODUCTION

5-1. Definition. Those wastewater treatment processes that employ physical forces (mechanical, gravimetric, etc.) as a principal means of treatment are generally referred to as physical unit processes or unit operations. The physical unit processes described in this chapter are:

a. Grit removal.

b. Screening.

c. Comminution.

d. Equalization.

e. Flotation.

f. Thickening (gravity).

g. Sedimentation (primary clarifier).

h. Sedimentation (secondary clarifier).

i. Filtration.

j. Vacuum filtration.

k. Centrifugation.

l. Microscreening.

m. Drying beds.

n. Postaeration.

o. Sludge hauling and landfilling.

p. Multiple-hearth incineration.

q. Fluidized bed incineration.

(next page is 5-3)

Section II. GRIT REMOVAL

5-2. Background.

a. Grit removal is classified as a protective or a preventive measure. The process does not contribute materially to the reduction in the pollutional load applied to the wastewater treatment facility. Grit chambers are designed to remove grit which may include sand, gravel, cinder, and other inorganic abrasive matter. Grit causes wear on pumps, fills pump sumps and sludge hoppers, clogs pipes and channels, and occupies valuable space in sludge digestion tanks. Grit removal, therefore, results in the reduction of maintenance costs of mechanical equipment and the elimination of operational difficulties caused by grit. Grit removal is recommended for small as well as large treatment facilities and for those served by combined as well as separate sewer systems. Bar screens are usually installed ahead of grit chambers to remove large floating objects.

b. Grit removal is normally accomplished through control of velocity and settling time. The objective is to settle the grit particles while keeping the putrescible matter in suspension. Theoretically, it is desirable to remove all grit; however, experience indicates that removing 65-mesh grit, i.e. grit that is retained on a 65-mesh screen, provides sufficient protection to mechanical equipment and eliminates the majority of operational troubles caused by the grit. To remove the 65-mesh grit with a minimum of putrescible matter, a flow-through velocity of 0.75-1.25 fps must be provided at all flows.

c. The type of settling that normally takes place in a grit chamber is classified as discrete settling, since each particle retains its identity while settling at a constant rate. The design of such a chamber is usually based on an overflow rate that exceeds the settling velocity of the smallest particle desired to be removed. Smaller particles are removed in proportion, according to the ratio of their settling velocities to the settling velocity of the smallest particle that is, theoretically, 100 percent removed. The overflow rates selected in the design of a grit chamber must, therefore, exceed the settling velocity of the 65-mesh particle. Grit settling velocities are summarized in Table 5-1.

d. Grit chambers may be classified generally as either horizontal flow or aerated. In the horizontal flow type, the velocity is controlled by the dimensions of the chamber or by the use of a proportional weir or a Parshall flume at the effluent end of the chamber. Aerated

grit chambers consist of a spiral flow aeration tank with the spiral flow velocity controlled by the dimensions and the quantity of air supplied to the chamber. These chambers are very efficient and the grit will be washed and easy to handle. Aerated grit chambers provide a detention time of 3 min at the maximum rate of flow. Mechanical grit removal equipment is usually recommended.

e. In summary, the design of grit chambers depends on the type selected, type of grit removal equipment, specification of the selected grit removal equipment, and the quantity and quality of the grit to be handled.

f. Extensive discussion of grit removal is presented in the bibliography (**para 5-9 below**).

g. As the trend toward mechanization of wastewater treatment facilities continues to increase at a rapid rate, it is becoming a common practice to include grit removal facilities in the design of treatment systems serving small, as well as large, communities. Picnickers and campers in some recreation areas either maliciously or accidentally drop cans, bags, bottles, sticks, and rocks into vault toilets, trailer dump stations, and other facilities. Hence, wastewater characteristics should be thoroughly examined to determine the need for grit removal facilities in the design of systems for recreation areas. Figure 5-1 shows a typical aerated grit chamber. Figure 5-2 shows a typical horizontal flow grit chamber.

5-3. Input Data.

a. Wastewater Flow.

(1) Minimum and peak flows, mgd.

(2) Average daily flow, mgd.

b. Wastewater Characteristics (not applicable).

5-4. Design Parameters (Tables 5-1 and 5-2).

a. Horizontal Flow Grit Chamber.

(1) Particle size, mm.

(2) Specific gravity.

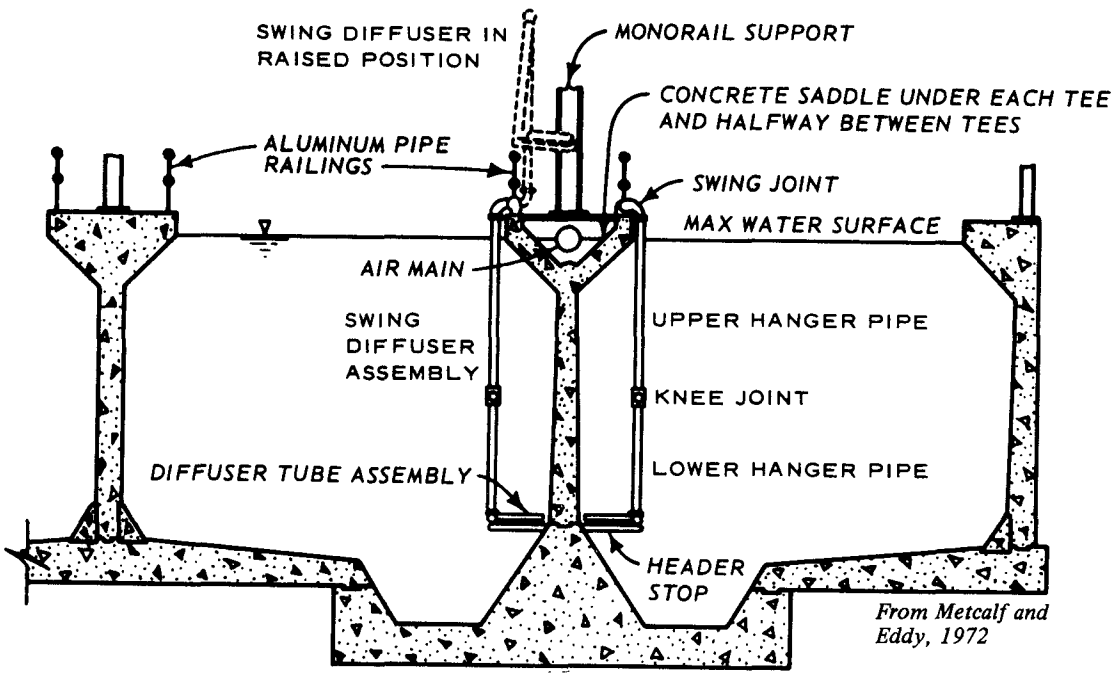

Figure 5-1. Schematic of a typical aerated grit chamber.

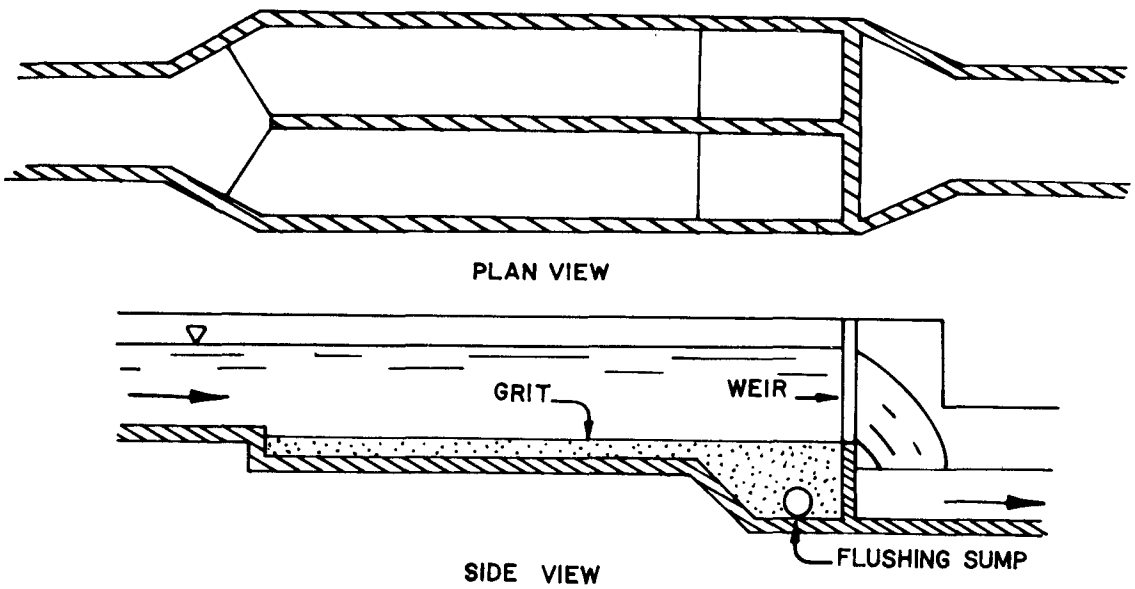

Figure 5-2. Schematic of a typical horizontal flow grit chamber.

(3) Maximum and average velocities, fps.

(4) Current allowance (1.7).

(5) Volume of grit, ft^3.

(6) Number of units.

b. Aerated Grit Chamber.

(1) Detention time, min.

(2) Air supply, cfm/ft.

(3) Maximum and average velocities, fps.

(4) Volume of grit, ft^3.

(5) Number of units.

5-5. Design Procedure.

a. Horizontal Flow Grit Chamber.

(1) Select the number of units and calculate flow per unit.

$$Q/\text{unit} = \frac{Q_T}{N}$$

where

Q_T = total flow to plant, mgd

N = number of units

(2) Select maximum controlled velocity, $v \approx 1.25$ fps.

(3) Calculate cross-sectional area.

$$A = \frac{Q_{max}}{v_{max}} \times 1.54$$

where

A = cross-sectional area, ft^2

Q_{max} = maximum flow/unit, mgd

v_{max} = maximum controlled velocity, fps

(4) Assume depth and calculate width or vice versa.

$$A = WD$$

where

W = channel width, ft

D = channel depth, ft

(5) Calculate settling velocity of the smallest particle desired to be 100% removed (according to Table 5-1 or calculations).

Size ≈ 0.2 mm

Specific gravity ≈ 2.65

$$v_s = \left[\frac{(4/3)(g/c_d)(P_s - 1)(d_p)}{3.28 \times 10^{-3}}\right]^{1/2}$$

$$c_d = \left(\frac{24}{R_n}\right) + \left(\frac{3}{\sqrt{R_n}}\right) + (0.34)$$

where

v_s = settling velocity of smallest particle that is 100% removed, fps

g = gravitational acceleration, 32.2 fps^2

c_d = drag coefficient

P_s = specific gravity of the particle

d_p = diameter of the particle, mm

$$R_n = \text{Reynolds number} = \frac{(v_s)(d_p)}{\nu \times 3.28 \times 10^{-3}}$$

ν = kinematic viscosity of the liquid, ft^2/sec

3.28×10^{-3} = conversion factor, mm to ft

(6) Calculate the length of each channel.

$$L = D_{max}\left(\frac{v_{max}}{v_s}\right)(1.7)$$

where

L = length of the channel, ft

D_{max} = depth at maximum flow, ft

v_{max} = velocity at maximum discharge, fps

v_s = settling velocity of the smallest particle that is 100% removed, fps

1.7 = allowance for currents

(7) Calculate detention time.

$$t = \frac{(D)(W)(L)}{Q \times 1.54}$$

where

t = detention time, sec

D = channel depth, ft

W = channel width, ft

L = length of channel, ft

Q = flow, mgd

1.54 = conversion factor, mgd to cfs

(8) Calculate bottom slope of channel.

$$v_{avg} = \frac{1.49}{n} R^{2/3} S^{1/2}$$

where

v_{avg} = velocity at average discharge, fps

n = Manning's coefficient (a value of 0.03 may be used)

R = hydraulic radius of cross section = $\frac{A}{2D + W}$ for rectangular channel

S = slope

(9) Calculate approximate volume of grit. The volume of grit may vary from less than 1 ft^3 to more than 12 ft^3 per million gal of wastewater. It must also be noted that the grit collected from a horizontal flow grit chamber will contain a high amount of putrescible matter and should be washed before disposal.

Assume 4 ft^3/million gal (approximate)

$$V_g = 4Q$$

where

V_g = volume of grit, ft^3/day

Q = flow, mgd

(10) Design control section at outlet.

b. <u>Aerated Grit Chamber</u>.

(1) Calculate the length of channel.

$$L = \frac{(t)(Q_p)(1.54)(1.7)(60)}{A}$$

where

L = length of channel, ft

t = detention time, min

Q_p = peak flow, mgd

A = cross-sectional area, ft^2

(2) Calculate air requirements, cfm.

$$\text{Total air} = L \times O_2/ft$$

where

L = length of chamber

O_2/ft = air supply per ft of length (Table 5-2)

5-6. Output Data.

a. Horizontal Flow Grit Chamber.

(1) Maximum flow, cfs.

(2) Average flow, cfs.

(3) Minimum flow, cfs.

(4) Temperature, °C.

(5) Maximum flow-through velocity, fps.

(6) Average flow-through velocity, fps.

(7) Size smallest particle 100% removed, mm.

(8) Specific gravity of particle.

(9) Number of units.

(10) Maximum flow/unit, cfs.

(11) Width of channel, ft.

(12) Depth of channel, ft.

(13) Length of channel, ft.

(14) Settling velocity of particle, fps.

(15) Slope of channel bottom.

(16) Allowance for currents.

(17) Detention time, sec.

(18) Manning's coefficient.

(19) Volume of grit, ft^3/day.

(20) Design outlet control section.

b. Aerated Grit Chamber.

(1) Detention time, min.

(2) Air supply, cfm/ft.

(3) Length, ft.

(4) Total air requirement, cfm.

5-7. Example Calculations.

a. Horizontal Flow Grit Chamber.

(1) Select number of units and calculate flow per unit.

$$\frac{Q}{\text{unit}} = \frac{Q_T}{N}$$

where

Q_T = total flow to plant = 1 mgd

N = number of units = 1

$$\therefore Q/\text{unit} = \frac{1}{1}$$

$$\underline{Q/\text{unit} = 1}$$

(2) Select maximum controlled velocity, $\underline{v \approx 1.25 \text{ fps}}$.

(3) Calculate cross-sectional area.

$$A = \frac{Q_{max}}{v_{max}} \times 1.54$$

where

A = cross-sectional area, ft^2

Q_{max} = maximum flow/unit, 1 mgd

v_{max} = maximum controlled velocity, 1.25 fps

1.54 = conversion factor

$$\therefore A = \frac{1 \text{ mgd}}{1.25 \text{ fps}} \times 1.54$$

$$\underline{A = 1.23 \text{ ft}^2}$$

(4) Assume depth and calculate width.

$$W = \frac{A}{D}$$

where

W = width, ft

A = cross-sectional area, 1.23 ft^2

D = assumed depth, 1 ft

$$\therefore W = \frac{1.23 \text{ ft}^2}{1 \text{ ft}}$$

$$\underline{W = 1.23 \text{ ft}}$$

(5) Calculate settling velocity of smallest particle desired to be 100% removed from Table 5-1.

Size $\approx$ 0.2 mm

Specific gravity $\approx$ 2.65

$$v_s = \left[\frac{(4/3)(g/c_d)(P_s - 1)(d_p)}{3.28 \times 10^{-3}}\right]^{1/2}$$

$$c_d = \left(\frac{24}{R_n}\right) + \left(\frac{3}{\sqrt{R_n}}\right) + (0.34)$$

where

v_s = settling velocity of smallest particle that is 100% removed, fps

g = gravitational acceleration, 32.2 fps^2

c_d = drag coefficient

P_s = specific gravity of particle, 2.65

d_p = diameter of particle, 0.2 mm

R_n = Reynolds number = $\dfrac{(v_s)(d_p)}{\nu \times 3.28 \times 10^{-3}}$

ν = kinematic viscosity of liquid (use 1.0×10^{-5} ft^2/sec)

3.28×10^{-3} = conversion factor, mm to ft

From Table 5-1 select v_s

$$\underline{v_s = 3.7 \text{ ft/min} = 0.06 \text{ fps}}$$

(6) Calculate the length of each channel.

$$L = D_{max} \left(\frac{v_{max}}{v_s}\right) 1.7$$

where

L = length of channel, ft

D_{max} = depth at maximum flow, 1 ft

v_{max} = velocity of maximum discharge, 1.25 fps

v_s = settling velocity of smallest particle 100% removed, 0.06 fps

1.7 = allowance for currents

$$L = 1 \left(\frac{1.25}{0.06}\right) 1.7$$

$$\underline{L = 35.4 \text{ ft}}$$

(7) Calculate detention time.

$$t = \frac{(D)W(L)}{Q \times 1.54}$$

where

t = detention time, sec

D = channel depth, 1 ft

W = channel width, 1.23 ft

L = channel length, 35.4 ft

Q = flow, 1 mgd

1.54 = conyersion factor, mgd to cfs

$$t = \frac{1(1.23)35.4}{1 \times 1.54}$$

$$\underline{t = 28.3 \text{ sec}}$$

(8) Calculate bottom slope of channel.

$$v_{avg} = \frac{1.49}{n} R^{2/3} S^{1/2}$$

where

v_{avg} = velocity at average discharge, 1.23 fps

n = Manning's coefficient (use 0.03)

R = hydraulic radius = $\frac{A}{2D + W}$ for rectangular section

S = slope

$$R = \frac{A}{2D + W}$$

where

A = area, 1.23 ft^2

D = depth, 1.0 ft

W = width, 1.23 ft

$$R = \frac{1.23}{2 + 1.23}$$

$$R = 0.38$$

$$1.23 = \frac{1.49}{0.03} (0.38)^{3/2} S^{1/2}$$

$$\underline{S = 0.01 \text{ ft/ft}}$$

(9) Calculate approximate volume of grit assuming 4 ft^3/million gal.

$$V_g = 4Q$$

where

V_g = volume of grit, ft^3/day

Q = flow, mgd

$$V_g = 4(1)$$

$$\underline{V_g = 4 \text{ ft}^3/\text{day}}$$

5-8. Cost Data. Appropriate cost data and economic evaluation may be found in Chapter 8.

5-9. Bibliography.

a. American Society of Civil Engineers and the Water Pollution Control Federation, "Sewage Treatment Plant Design," Manual of Practice No. 8, 1959, 1961, 1967, 1968, Water Pollution Control Federation, Washington, D. C.

b. Camp, T. R., "Grit Chamber Design," Sewage Works Journal, Vol 14, No. 2, Mar 1942, pp 368-381.

c. Fair, G. M., Geyer, J. C., and Okun, D. A., Water Purification and Wastewater Treatment and Disposal; Water and Wastewater Engineering, Vol 2, Wiley, New York, 1968.

d. FMC Corporation, "Link-Belt Wastewater Treatment Equipment Design Catalogue," Binder 2650, Colmar, Pa.

e. Lee, M. L. and Babbitt, H. E., "Constant Velocity Grit Chambers with Parshall Flume Control," Sewage Works Journal, Vol 18, No. 4, Jul 1946.

f. Metcalf and Eddy, Inc., Wastewater Engineering; Collection, Treatment, and Disposal, McGraw-Hill, New York, 1972.

g. Neighbor, J. B. and Cooper, T. W., "Design and Operation Criteria for Aerated Grit Chambers," Water and Sewage Works, Vol 112, Dec 1965, pp 448-454.

Table 5-1. Grit Settling Velocities

Particle Size		Settling Velocity			Area Required
Mesh	mm	ft/min	gpd/ft^2	mgd/ft^2	ft^2/million gal
18	0.833	14.7	160,000	0.1600	6.3
20	0.595	10.5	114,500	0.1145	8.7
35	0.417	7.4	80,100	0.0801	12.5
48	0.295	5.2	56,700	0.0567	17.7
65[a]	0.208	3.7	40,000	0.0400	25.0
100	0.147	2.6	28,200	0.0282	35.5
150	0.105	1.8	20,200	0.0202	49.5

[a] Minimum particle size desirable for removal.

From Metcalf and Eddy, 1972

Table 5-2. Design Parameters for Aerated Grit Chambers

1. Air supply - 3 cfm/ft of tank length
2. Air diffusers - located 2 to 3 ft above tank bottom on one side of tank
3. Surface velocity - 1.5 to 2 fps
4. Tank floor velocity - 1 to 1.5 fps
5. Grit collectors - air lift pumps to decanting channels, grit conveyors or grit pumps
6. Detention time - 2 to 3 min
7. Efficiency - 100% removal of 65-mesh grit

From Metcalf and Eddy, 1972

Section III. SCREENING

5-10. Background.

a. Screening devices are used normally to remove large floating objects that otherwise may damage pumps and other equipment, obstruct pipelines, and interfere with the normal operation of the treatment facilities. Screens used in wastewater treatment facilities or in pumping stations are generally classified as fine screens or bar screens.

b. Fine screens are those with openings of less than 1/4 in. These screens have been used as a substitute for sedimentation tanks to remove suspended solids prior to biological treatment. However, few plants today use this concept of solids removal. Fine screens may be of the disk, drum, or bar type. Bar-type screens are available with openings of 0.005 to 0.10 in.

c. Bar screens are used mainly to protect pumps, valves, pipelines, and other devices from being damaged or clogged by large floating objects. Bar screens are sometimes used in conjunction with comminuting devices. Bar screens consist of vertical or inclined bars spaced at equal intervals (usually 3/4 to 3 in.) across the channel where wastewater flows. These devices may be cleaned manually or mechanically. Bar screens with openings exceeding 2-1/2 in. are termed trashracks.

d. The quantity of screenings removed by bar screens usually depends on the size of the bar spacings. Since the handling and disposal of screenings is one of the most disagreeable jobs in wastewater treatment, it is usually recommended that the quantity of screenings be kept at a minimum. Amounts of screenings from normal domestic wastes have been reported from 0.5 to 5 ft^3/million gal of wastewater treated. Screenings may be disposed of by burial, incineration, grinding, and digestion.

e. Design of bar screens is based mainly on average and peak wastewater flow. Normal design and operating parameters are usually presented in the manufacturer's specifications. The bibliography (para 5-17) presents a thorough discussion of the design, operation, and maintenance of screening devices. General characteristics of bar and fine screens are presented in Tables 5-3 and 5-4, respectively. Figure 5-3 shows a mechanically cleaned bar rack.

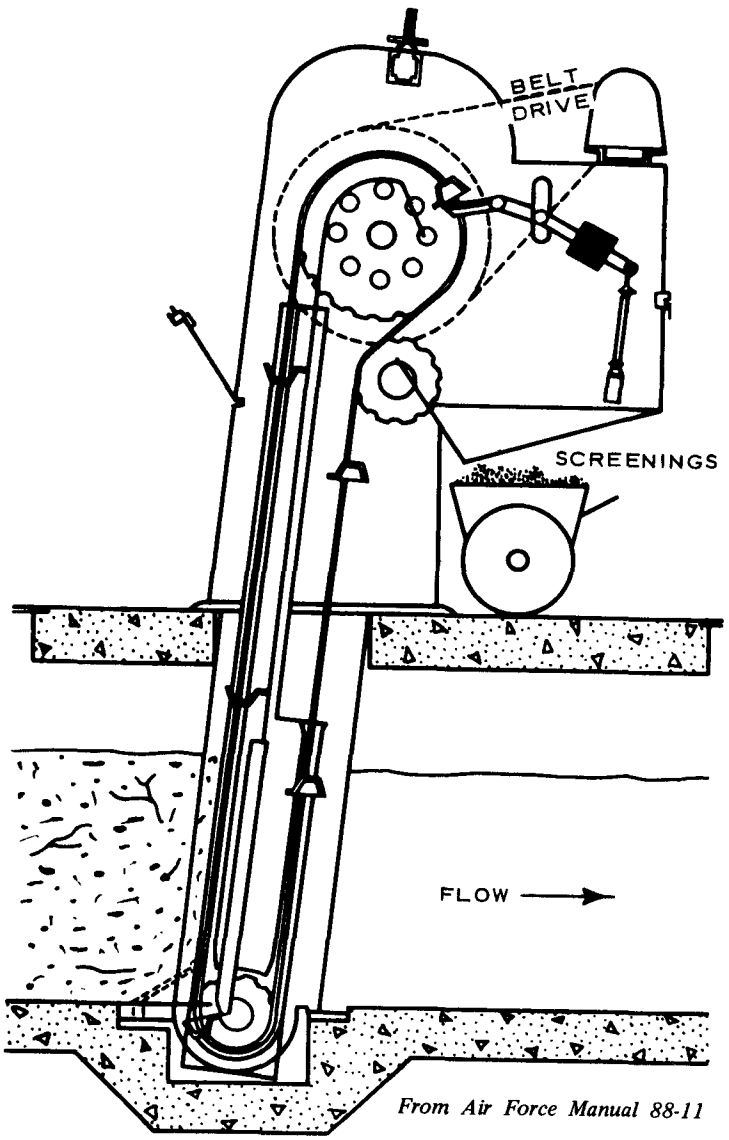

Figure 5-3. Schematic of a mechanically cleaned bar rack.

5-11. Input Data.

a. Wastewater Flow.

(1) Average daily flow, mgd.

(2) Maximum daily flow, mgd.

(3) Peak wet weather flow, mgd.

b. Wastewater Characteristics (not applicable).

5-12. Design Parameters.

a. Type of bar screen.

(1) Manually cleaned.

(2) Mechanically cleaned.

b. Velocity through bar screen, fps (Table 5-3).

c. Approach velocity, fps (Table 5-3).

d. Maximum head loss through screen, in. (Table 5-3).

e. Bar spacings, in. (Table 5-3).

f. Slope of bars, deg (Table 5-3).

g. Channel width, ft.

h. Width of bar, in.

i. Shape factor.

5-13. Design Procedure.

a. Consult equipment manufacturer's specifications and select a bar screen which meets design requirements.

b. Calculate head loss through the screen. It should be noted that when screens start to become clogged between cleanings in manually cleaned screens head loss will increase.

$$h_e = \beta \left(\frac{W}{b}\right)^{4/3} \left(\frac{v^2 \sin^2 \Theta}{2g}\right)$$

where

h_e = head loss through the screen, ft

β = bar shape factor

= 2.42 for sharp-edged rectangular bars

= 1.83 for rectangular bars with semicircular upstream faces

= 1.79 for circular bars

= 1.67 for rectangular bars with semicircular upstream and downstream faces

= 0.76 for rectangular bars with semicircular upstream faces and tapering in a symmetrical curve to a small circular downstream face (teardrop)

W = maximum width of bars facing the flow, in.

b = minimum width of the clear spacings between pairs of bars, in.

v = longitudinal approach velocity, fps

Θ = angle of the rack with horizontal, deg

g = gravitational acceleration

c. Calculate average depth.

$$D = \frac{(Q_{avg})(1.54)}{(W_c)(V)}$$

where

D = average depth, ft

Q_{avg} = average flow, mgd

W_c = channel width, ft

V = average velocity, fps

d. Calculate maximum depth.

$$D_{max} = D \left(\frac{Q_p}{Q_{avg}} \right)$$

where

D_{max} = maximum depth, ft

D = average depth, ft

Q_p = peak flow, mgd

Q_{avg} = average flow, mgd

5-14. Output Data.

a. Bar size, in.

b. Bar spacing, in.

c. Slope of bars from horizontal, deg.

d. Head loss through screen, ft.

e. Approach velocity, fps.

f. Average flow-through velocity, fps.

g. Maximum flow-through velocity, fps.

h. Screen channel width, ft.

i. Channel depth, ft.

5-15. Example Calculations.

a. Select a mechanically cleaned bar screen from Table 5-3 with bar screen size of width = 1/4 in., depth = 1 in., spacing = 5/8 in., slope = 10 deg, approach velocity = 2 fps, and allowable head loss = 6 in.

b. Calculate head loss through screen.

$$h_e = \beta\left(\frac{W}{b}\right)^{4/3}\left(\frac{v^2 \sin^2 \Theta}{2g}\right)$$

where

h_e = head loss, ft

β = bar shape factor, 1.83

W = width = 1/4 in.

b = spacing = 5/8 in.

v = approach velocity = 2 fps

Θ = slope of rack = 10 deg

g = gravitational acceleration = 32.2 ft/sec^2

$$h_e = 1.83\left(\frac{1/4}{5/8}\right)^{4/3}\left[\frac{2^2(\sin^2 10)}{2(32.2)}\right]$$

$$\underline{h_e = 0.001 \text{ ft}}$$

c. Calculate the average depth.

$$D = \frac{(Q_{avg})(1.54)}{W_c(v)}$$

where

D = average depth, ft

Q_{avg} = average flow, 1 mgd

W_c = channel width, 1.23 ft

v = average velocity, 2 fps

$$D = \frac{1 \text{ mgd}(1.54)}{1.23(2)}$$

$$\underline{D = 0.63 \text{ ft}}$$

d. Calculate maximum depth.

$$D_{max} = D\left(\frac{Q_p}{Q_{avg}}\right)$$

where

D_{max} = maximum depth, ft

D = average depth, 0.63 ft

Q_p = peak flow, 2 mgd

Q_{avg} = average flow, 1 mgd

$$D_{max} = 0.63\left(\frac{2}{1}\right)$$

$$\underline{D_{max} = 1.26 \text{ ft}}$$

5-16. Cost Data. Appropriate cost data and economic evaluation may be found in Chapter 8.

5-17. Bibliography.

a. American Society of Civil Engineers and the Water Pollution Control Federation, "Sewage Treatment Plant Design," Manual of Practice No. 8, 1959, 1961, 1967, 1968, Water Pollution Control Federation, Washington, D. C.

b. Equipment Manufacturers' Catalogs.

c. Fair, G. M., Geyer, J. C., and Okun, D. A., Water Purification and Wastewater Treatment and Disposal; Water and Wastewater Engineering, Vol 2, Wiley, New York, 1968.

d. Goodman, B. L., Design Handbook of Wastewater Systems: Domestic, Industrial, Commercial, Technomic, Westport, Conn., 1971.

e. Great Lakes-Upper Mississippi River Board of State Sanitary Engineers, "Recommended Standards for Sewage Works (Ten States Standards)," 1971, Health Education Service, Albany, N. Y.

f. Metcalf and Eddy, Inc., Wastewater Engineering; Collection, Treatment, and Disposal, McGraw-Hill, New York, 1972.

Table 5-3. General Characteristics of Bar Screens

Item	Hand Cleaned	Mechanically Cleaned
Bar screen size		
Width, in.	1/4 to 5/8	1/4 to 5/8
Depth, in.	1 to 3	1 to 3
Spacing, in.	1 to 2	5/8 to 3
Slope from vertical, deg	30 to 45	0 to 30
Approach velocity, fps	1 to 2	2 to 3
Allowable head loss, in.	6	6

Table 5-4. General Characteristics of Fine Screens

Item	Disk	Drum
Fine screen		
Openings, in.	0.126 to 0.009 (6 to 60 mesh)	0.126 to 0.009 (6 to 60 mesh)
Diameter, ft	4 to 18	3 to 5
Length, ft		4 to 12
rpm		4

(next page is 5-29)

Section IV. COMMINUTION

5-18. Background.

a. Comminutors are screens equipped with a device that cuts and shreds the screenings without removing them from the waste stream. Thus, comminuting devices eliminate odors, flies, and other nuisances associated with other screening devices. A variety of comminuting devices are available commercially.

b. Comminutors are usually located behind grit removal facilities in order to reduce wear on the cutting surfaces. They are frequently installed in front of pumping stations to protect the pumps against clogging by large floating objects.

c. The comminutor size is based usually on the volume of waste to be treated. Treatment plants with a wastewater flow below 1 mgd normally use one comminutor. Table 5-5 summarizes design characteristics of comminutors.

d. In wastewater treatment facilities for recreation areas, one comminutor may be installed in the wet well to protect the pump from large floating objects. In the treatment of vault waste, a comminutor may be included as an integral part of a vault waste holding station. Figure 5-4 shows a comminutor.

5-19. Input Data.

a. Wastewater flow, mgd.

(1) Average daily flow, mgd.

(2) Maximum flow, mgd.

b. Wastewater characteristics (not applicable).

5-20. Design Parameters. None.

5-21. Design Procedure. Select comminutor from equipment manufacturer's catalog to correspond to maximum wastewater flows.

5-22. Output Data.

a. Comminutor specifications.

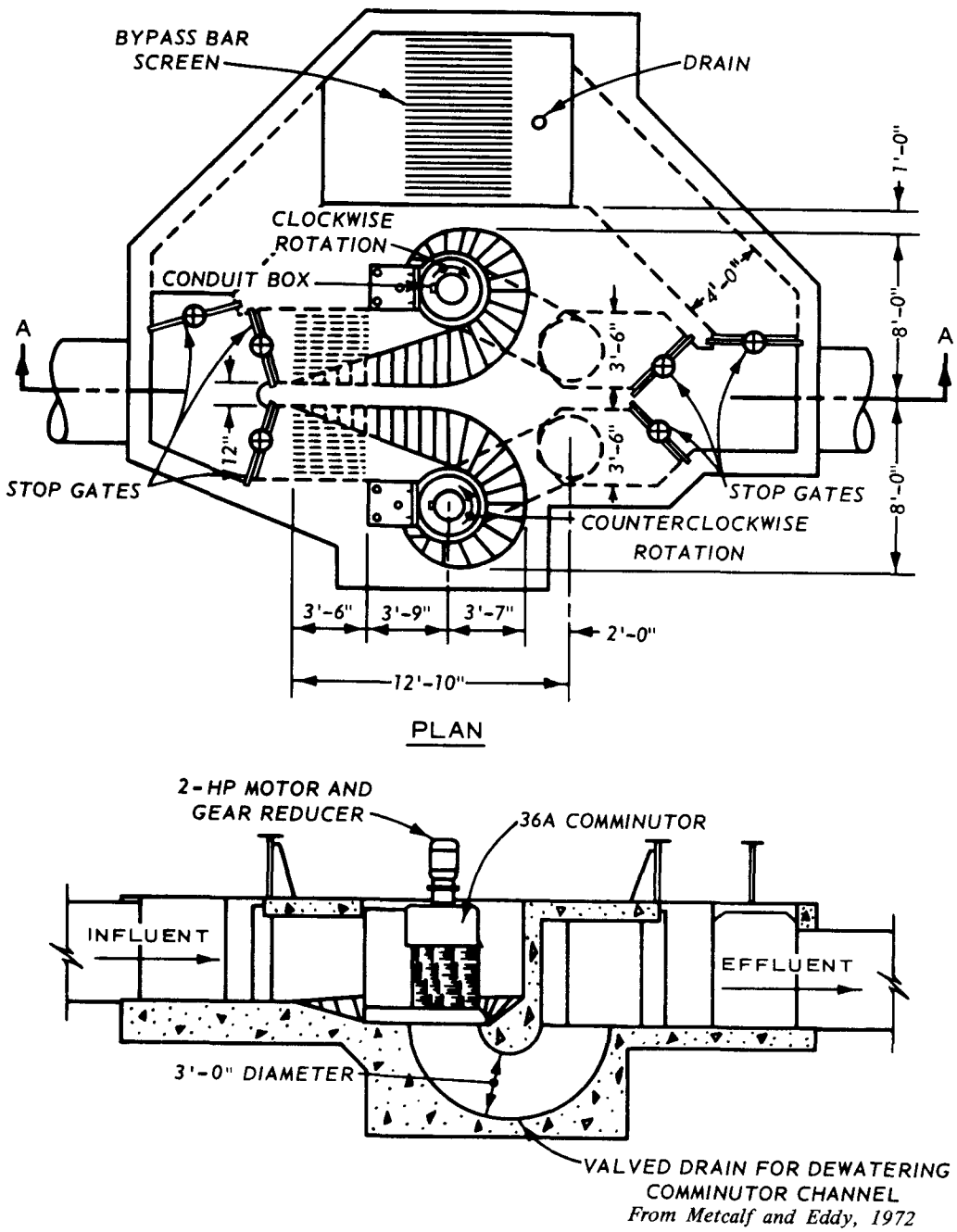

Figure 5-4. Schematic of a typical comminutor.

b. Number of comminutors.

5-23. Example Calculations. None.

5-24. Cost Data. Appropriate cost data and economic evaluation may be found in Chapter 8.

5-25. Bibliography.

a. American Society of Civil Engineers and the Water Pollution Control Federation, "Sewage Treatment Plant Design," Manual of Practice No. 8, 1959, 1961, 1967, 1968, Water Pollution Control Federation, Washington, D. C.

b. Fair, G. M., Geyer, J. C., and Okun, D. A., Water Purification and Wastewater Treatment and Disposal; Water and Wastewater Engineering, Vol 2, Wiley, New York, 1968.

c. Goodman, B. L., Design Handbook of Wastewater Systems: Domestic, Industrial, Commercial, Technomic, Westport, Conn., 1971.

d. Metcalf and Eddy, Inc., Wastewater Engineering; Collection, Treatment, and Disposal, McGraw-Hill, New York, 1972.

Table 5-5. Comminutor Size Selection

Drum Diameter in.	Drum rpm	Avg Slot Width in.	Horse-power	Standard Sizes Height	Standard Sizes Net Weight lb	Rates of Flow Avg 12-hr Day Time, mgd	Maximum Hourly Rates of Flow mgd
4	56	1/4	1/4	2 ft 3-1/4 in.	175	0 to 0.035	0.09
7	56	1/4	1/4	4 ft 3 in.	450	0.03 to 0.113	0.24
7	56	1/4	1/4	4 ft 3 in.	450	0.06 to 0.200	0.36
10	45	1/4	1/2	4 ft 5 in.	650	0.17 to 0.720	1.08
15	37	1/4	3/4	4 ft 11-1/2 in.	1100	0.25 to 1.820	2.40
25	25	3/8	1-1/2	5 ft 9-1/2 in.	2100	0.97 to 5.100	6.10
25	25	3/8	1-1/2	6 ft 11-1/2 in.	3500	1.00 to 9.400	11.10
36	15	3/8	2	9 ft 4-1/2 in.	8500	1.30 to 20.00	24.00

From Goodman, 1971

Section V. EQUALIZATION

5-26. Background.

a. Equalization is a unit operation used for highly variable waste flows or strengths to provide a uniform discharge and/or concentration to a treatment facility or receiving streams. Experience has shown that treatment processes (physical, chemical, or biological) perform better if extreme load fluctuations enroute to the process can be settled. Equalization before biological treatment prevents slugs of toxic substances and provides a uniform organic loading to the system. Equalization may also follow chemical coagulation to facilitate the automatic pH control schemes and chemical feeding.

b. Flow equalization tanks are usually aerated to prevent deposition of solids and/or the development of anaerobic conditions. Mixing requirements for wastewaters having a suspended solids concentration of approximately 200 mg/ℓ range from 0.02 to 0.04 hp/1000 gal of maximum storage volume. Aeration (approximately 15 mg O_2/ℓ/hr) is recommended to prevent septic odor problems. Airflow rates from 5 to 20 cfm/ft^3 of tank volume are common.

c. Design of equalization basins varies with the quantity of the waste and the pattern of its discharge. Concentration time profiles and the frequency flow fluctuations are normally used as a basis in the design of these tanks. Supplying enough air to keep the basin aerobic and providing adequate mixing to prevent solids deposition may be considered the major factors in equalization basin design.

5-27. Input Data.

a. Flow data.

(1) Peak daily flow, mgd.

(2) Average daily flow, mgd.

(3) Minimum daily flow, mgd.

b. Wastewater characteristics.

(1) Desired mean concentration, mg/ℓ.

(2) Time variation in concentration, hr.

5-28. Design Parameters.

a. Detention time (dependent on the fluctuation cycle), days.

b. Mixing requirements (0.02 to 0.04 hp/1000 gal).

c. Air requirements (5 to 20 cfm/ft^3).

d. α (0.9).

e. β (0.9).

f. Standard transfer efficiency, STE, lb O_2/hp/hr.

g. Oxygen requirements, mg/ℓ/hr.

5-29. Design Procedure.

a. Select detention time based on the cycle of flow fluctuation.

b. Calculate volume of basin.

$$V = (Q)(t)$$

where

V = volume, million gal

Q = design flow, mgd

t = detention time, days

c. Assume horsepower requirements for mixing (manufacturer's requirements or 20 to 40 hp/million gal) and calculate total horsepower requirement.

$$hp = (hp/1000\ gal) \times (V) \times (1000)$$

d. Check horsepower for oxygen requirement to maintain aerobic conditions.

(1) Calculate O_2 required for aerobic conditions.

$$O_2(\text{lb/hr}) = (15\ \text{mg}/\ell/\text{hr}) \times (V) \times 8.34$$

where

V = volume of basin, million gal

(2) Calculate O_2 transfer at operating conditions.

$$\text{OTE} = \text{STE}\ \frac{(\beta C_s - C)}{9.17} \times \alpha \times (1.024)^{T-20}$$

where

OTE = operating transfer efficiency, lb O_2/hp/hr

STE = standard transfer efficiency at zero dissolved oxygen (DO), tap water, and 20°C ≈ 3.8

$$\beta = \frac{O_2 \text{ saturation in waste}}{O_2 \text{ saturation in water}} \approx 0.9$$

C_s = oxygen saturation at summer temperature

C = minimum DO concentration in tank ≈ 2 mg/ℓ

$$\alpha = \frac{O_2 \text{ transfer in waste}}{O_2 \text{ transfer in water}} \approx 0.9$$

T = temperature, °C

(3) Calculate horsepower required to supply O_2 for aerobic conditions.

$$\text{hp} = \frac{O_2(\text{lb/hr})}{\text{OTE}}$$

(4) Compare horsepower calculated from (3) above with horsepower calculated for mixing (c above), and select the larger of the two horsepowers.

5-30. Output Data.

a. Detention time, days.

b. Desired concentration O_2, mg/ℓ.

c. Mixing requirements, hp/1000 gal.

d. Air requirements, cfm/ft^3.

e. Volume, million gal.

f. Total power requirements, hp.

5-31. Example Calculations.

a. Select a detention time. It has been determined that a detention time of 1-1/2 days is necessary for flow equalization.

b. Calculate volume of basin.

$$V = Qt$$

where

V = volume, million gal

Q = average daily flow, 1 mgd

t = detention time, 1.5 days

$$V = 1(1.5)$$

$$\underline{V = 1.5 \text{ million gal}}$$

c. Assume horsepower requirements for mixing of 30 hp/million gal and calculate total horsepower requirement.

$$hp = (hp/1{,}000{,}000 \text{ gal})(V)$$

where

hp/1,000,000 gal = hp required for mixing, 30

V = volume, 1.5 million gal

$$hp = 30(1.5)$$

$$\underline{hp = 45}$$

d. Check horsepower for oxygen requirement to maintain aerobic conditions.

(1) Calculate O_2 required for aerobic conditions.

$$O_2(lb/hr) = (15\ mg/\ell/hr)V(8.34)$$

where

$O_2(lb/hr)$ = oxygen requirement

V = volume of tank, 1.5 million gal

$$O_2(lb/hr) = (15)(1.5)(8.34)$$

$$\underline{O_2(lb/hr) = 187.65}$$

(2) Calculate the O_2 transfer at operating conditions.

$$OTE = STE \frac{(\beta C_s - C)}{9.17} \alpha\ 1.024^{T-20}$$

where

OTE = operating transfer efficiency, lb O_2/hp/hr

STE = standard transfer efficiency, 3.8

β = 0.9

C_s = oxygen saturation at temperature T, 7.63 mg/ℓ

C = minimum oxygen concentration, 2.0 mg/ℓ

α = 0.9

T = temperature, 30°C

9.17 = oxygen saturation at 20°C

$$OTE = 3.8 \frac{[0.9(7.63) - 2.0]}{9.17} (0.9)1.024^{(30-20)}$$

$$\underline{OTE = 2.3}$$

(3) Calculate horsepower required to maintain aerobic conditions.

$$hp = \frac{O_2(lb/hr)}{OTE}$$

where

hp = required horsepower

O_2(lb/hr) = oxygen requirement, 187.65

OTE = operating transfer efficiency, 2.3

$$hp = \frac{187.65}{2.3}$$

$$\underline{hp = 81.6}$$

(4) Select larger horsepower requirement for mixing or for maintaining aerobic conditions.

hp = 81.6 use **82**

5-32. Cost Data. Appropriate cost data and economic evaluation may be found in Chapter 8.

5-33. Bibliography.

a. Nemerow, N. L., Liquid Waste of Industry, Addison-Wesley, Reading, Mass., 1971.

b. Reynolds, E., Gibbon, J. D., and Attwood, D., "Smoothing Quality Variations in Storage Chests Holding Paper Stock," Transactions, Institution of Chemical Engineers, Vol 42, T13, 1964.

c. Roy F. Weston, Inc., "Process Design Manual for Upgrading Existing Wastewater Treatment Plants," prepared for the U. S. Environmental Protection Agency, Technology Transfer, Oct 1971, Washington, D. C.

d. Wallace, A. T., "Analysis of Equalization Basins," Journal, Sanitary Engineering Division, American Society of Civil Engineers, Vol 94, SA6, 1968, pp 1161-1174.

e. Wallace, A. T., "Equalization," Seminar on Process Design in Water Quality Control, 9-13 Nov 1970, Vanderbilt University, Nashville, Tenn.

(next page is 5-41)

Section VI. FLOTATION

5-34. Background.

a. Flotation is a solid-liquid separation process. Separation is artificially induced by introducing fine gas bubbles (usually air) into the system. The gas bubbles become attached to the solid particulates, forming a gas-solid aggregate with an overall bulk density less than the density of the liquid; thus, these aggregates rise to the surface of the fluid. Once the solid particles have been floated to the surface, they can be collected by a skimming operation.

b. In wastewater treatment, flotation is used as a clarification process to remove suspended solids and as a thickening process to concentrate various types of sludges. However, high operating costs of the process generally limit its use to clarification of certain industrial wastes and for concentration of waste-activated sludge.

c. Air flotation systems may be classified as dispersed air flotation or dissolved air flotation. In dispersed air flotation, air bubbles are generated by introducing air through a revolving impeller or porous media. This type of flotation system is ineffective and finds very limited application in wastewater treatment. Dissolved air flotation may be subclassified as pressure flotation or vacuum flotation. Pressure flotation involves air being dissolved in the wastewater under elevated pressures and later released at atmospheric pressure. Vacuum flotation, however, consists of applying a vacuum to wastewater aerated at atmospheric pressure. Dissolved air-pressure flotation, considered herein, is the most commonly used in wastewater treatment.

d. The principal components of a dissolved air-pressure flotation system (fig. 5-5) are a pressurizing pump, air injection facilities, a retention tank, a back pressure regulating device, and a flotation unit. The primary variables for flotation design are pressure, recycle ratio, feed solid concentration, detention period, air-to-solids ratio, and solids and hydraulic loadings. Optimum design parameters must be obtained from bench scale or pilot plant studies. Typical design parameters are listed in Table 5-6.

5-35. Input Data.

a. Wastewater (or sludge) flow, mgd.

b. Suspended solids concentration in the feed, mg/ℓ.

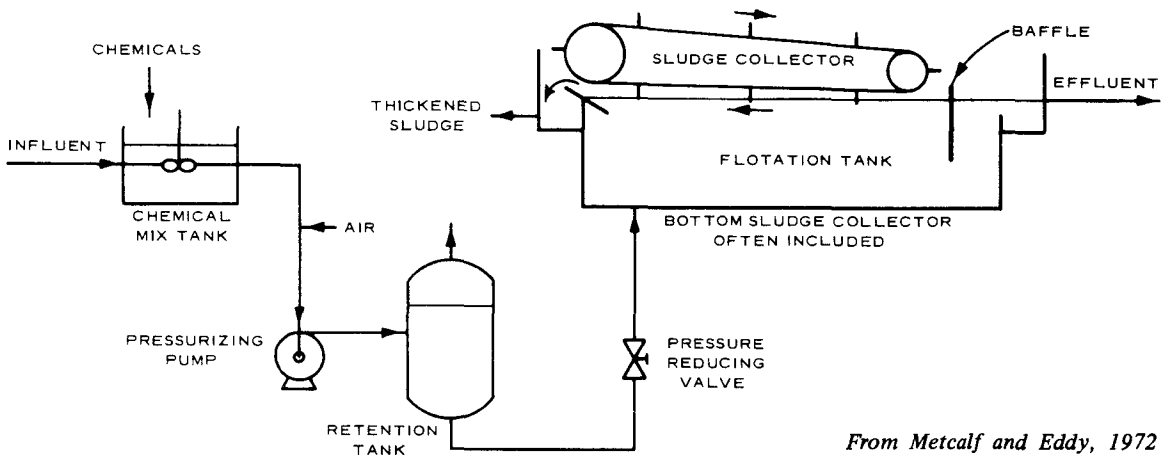

Figure 5-5. Schematic of a dissolved-air flotation tank without recycle.

(1) Average concentration.

(2) Variation in concentration.

5-36. Design Parameters. From laboratory or pilot plant studies.

a. Air-to-solids ratio (A/S).

b. Air pressure (P), psig.

c. Detention time in flotation tank (DTFT), hr.

d. Solids loading (ML), $lb/ft^2/day$.

e. Hydraulic loading (HL), gpm/ft^2.

f. Detention time in pressure tank (DTPT), min.

g. Float concentration (C_F), percent.

5-37. Design Procedure.

a. No Recycle (Direct Pressurization).

(1) Select air-to-solids ratio (from laboratory or pilot plant studies) (Table 5-6).

(2) Calculate the required pressure.

$$A/S = \frac{1.3S_a(0.5P - 1)}{C_o}$$

where

A/S = air-to-solids ratio, lb air/lb solids

S_a = air solubility at standard conditions, cc/ℓ

P = absolute pressure, in atmospheres = psig + 14.7/14.7

C_o = suspended solids concentration in the feed, mg/ℓ

psig = gage pressure

(3) Select a mass loading rate (or hydraulic loading rate) and calculate surface area.

$$SA = \frac{(Q)(C_o)(8.34)}{ML}$$

$$SA = \frac{(Q)(10^6)}{(HL)(60)(24)}$$

where

SA = surface area, ft^2

Q = feed flow, mgd

C_o = suspended solids concentration in the feed, mg/ℓ

ML = mass loading, $lb/ft^2/day$

HL = hydraulic loading, gpm/ft^2

(4) Use the larger of the two areas calculated in (3).

(5) Select detention time and calculate volume of flotation tank.

$$VOLFT = (Q)\left(\frac{1}{7.48}\right)\left(\frac{1}{24}\right)(DTFT)(10^6)$$

where

VOLFT = volume of flotation tank, ft^3

Q = total flow, mgd

DTFT = detention time in flotation tank, hr

(6) Calculate volume of sludge produced.

$$VSP = \frac{(Q)(C_o)(\%,\ \text{removal})}{(C_F)(\text{specific gravity})}$$

where

VSP = volume of sludge produced, gpd

Q = total flow, mgd

C_o = suspended solids concentration

C_F = solids concentration in float, %

b. <u>With Recycle</u>.

(1) Select air-to-solids ratio.

(2) Assume pressure (40 to 60 psig).

(3) Calculate P in atmospheres = psig + 14.7/14.7

(4) Calculate recycle flow.

$$\frac{A}{S} = \frac{1.3S_a(0.5P - 1)R}{QC_o}$$

where

A/S = air-to-solids ratio

S_a = air solubility at standard conditions, cc/ℓ

P = absolute pressure, atmospheres

R = recycle flow, mgd

Q = feed flow, mgd

C_o = influent suspended solids concentration, mg/ℓ

(5) Select a mass loading rate (for thickening) or hydraulic loading rate (for clarification) and calculate surface area.

$$SA = \frac{(Q)(C_o)(8.34)}{ML}$$

$$SA = \frac{(Q + R)(10^6)}{(HL)(60)(24)}$$

where

SA = surface area, ft^2

Q = feed flow, mgd

C_o = influent suspended solids concentration, mg/ℓ

ML = mass loading rate, $lb/ft^2/day$

R = recycle flow, mgd

HL = hydraulic loading rate, gpm/ft^2

(6) Use the larger of the two areas calculated in (5).

(7) Select detention time in the flotation tank and calculate the volume.

$$VOLFT = (Q + R) \times \left(\frac{1}{7.48}\right)\left(\frac{1}{24}\right)(DTFT)(10^6)$$

where

VOLFT = volume of flotation tank, ft^3

Q = total flow, mgd

R = recycle flow, mgd

DTFT = detention time in flotation tank, hr

(8) Select pressure tank detention time and calculate volume of pressure tank.

$$VOLPT = (R)\left(\frac{1}{7.48}\right)\left(\frac{1}{24}\right)\left(\frac{1}{60}\right)(DTPT)(10^6)$$

where

VOLPT = volume of pressure tank, ft^3

R = recycle flow, mgd

DTPT = detention time in pressure tank, min

(9) Calculate volume of sludge.

$$VS = \frac{(Q)(C_o)(\%\ \text{removal})}{(C_F)(\text{specific gravity})}$$

where

VS = volume of sludge, gpd

Q = feed flow, mgd

C_o = influent suspended solids concentration, mg/ℓ

C_F = solids concentration in float, percent

5-38. Output Data.

a. Suspended solids concentration, mg/ℓ

b. Air-to-solids ratio.

c. Air pressure, psig.

d. Solids loading, $lb/ft^2/day$.

e. Hydraulic loading, gpm/ft^2.

f. Recycle flow, mgd.

g. Surface area, ft^2.

h. Volume of pressure tank, ft^3.

i. Volume of flotation tank, ft^3.

j. Pressure tank detention time, min.

k. Flotation tank detention time, hr.

5-39. Example Calculations.

a. No Recycle.

(1) Select the air-to-solids ratio from Table 5-6. A/S = 0.003

(2) Calculate the required pressure

$$A/S = \frac{1.3S_a(0.5P - 1)}{C_o}$$

where

A/S = air-to-solids ratio, 0.03

S_a = air solubility at standard conditions, 18.7 cc/ℓ

P = absolute pressure, atmosphere

C_o = suspended solids concentration, 200 mg/ℓ

$$0.03 = \frac{1.3(18.7)(0.5P - 1)}{200}$$

$$\underline{P = 2.5}$$

$$P = \frac{psig + 14.7}{14.7}$$

$$psig = 14.7P - 14.7$$

$$psig = 14.7(2.5) - 14.7$$

$$\underline{psig = 22}$$

(3) Select a mass loading rate (Table 5-6) and calculate surface area.

$$SA = \frac{(Q)(C_o)(8.34)}{ML}$$

where

SA = surface area, ft^2

Q = average flow, 1 mgd

C_o = suspended solids concentration, 200 mg/ℓ

ML = mass loading, 10 $lb/ft^2/day$

$$SA = \frac{1(200)8.34}{10}$$

$$\underline{SA = 166.8\ ft^2}$$

(4) Use SA = 167 ft^2.

(5) Select a detention time and calculate volume of flotation tank

$$VOLFT = \frac{(Q)DTFT \times 10^6}{7.48 \times 24}$$

where

VOLFT = volume of flotation tank, ft^3

Q = average flow, 1 mgd

DTFT = detention time, 3 hr

7.48 = conversion, gal to ft^3

24 = conversion, day to hr

$$VOLFT = \frac{1(3) \times 10^6}{7.48 \times 24}$$

$$\underline{VOLFT = 16{,}711\ ft^3}$$

(6) Calculate volume of sludge produced.

$$VSP = \frac{Q(C_o)(\%\ \text{removed})}{C_F(\text{specific gravity})}$$

where

VSP = volume of sludge produced, gpd

Q = average flow, 1 mgd

C_o = suspended solids concentration, 200 mg/ℓ

% removed = 80%

C_F = solids concentration in float, 5%

Specific gravity = 1.05

$$VSP = \frac{1(200)80}{5(1.05)}$$

$$\underline{VSP = 3{,}048 \text{ gpd}}$$

b. <u>With Recycle</u>.

(1) Select air-to-solids ratio, use 0.05.

(2) Assume pressure, use 50 psig.

(3) Calculate P in atmosphere.

$$P = \frac{psig + 14.7}{14.7}$$

$$P = \frac{50 + 14.7}{14.7}$$

$$\underline{P = 4.4 \text{ atm}}$$

(4) Calculate recycle flow.

$$A/S = \frac{1.3S_a(0.5P - 1)R}{QC_o}$$

where

A/S = air-to-solids ratio, 0.05

S_a = air solubility at standard conditions, 18.7 cc/ℓ

P = absolute pressure, 4.4 atm

R = recycle flow, mgd

Q = average flow, 1 mgd

C_o = suspended solids concentration, 200 mg/ℓ

$$0.05 = \frac{1.3(18.7)[0.5(4.4) - 1]R}{1(200)}$$

$$\underline{R = 0.343 \text{ mgd}}$$

(5) Select hydraulic loading and calculate surface area.

$$SA = \frac{(Q + R)10^6}{HL(60)24}$$

where

SA = surface area, ft^2

Q = average flow, 1 mgd

R = recycle flow, 0.342 mgd

HL = hydraulic loading, 1.5 gpm/ft^2

24 = hr/day

60 = min/hr

$$SA = \frac{(1 + 0.342)10^6}{1.5(60)24}$$

$$\underline{SA = 621.3 \text{ ft}^2}$$

(6) Use $SA = 622 \text{ ft}^2$.

(7) Select detention time in flotation tank and calculate volume.

$$VOLFT = \frac{(Q + R)DTFT \times 10^6}{7.48(24)}$$

where

VOLFT = volume of flotation tank, ft^3

Q = average flow, 1 mgd

DTFT = detention time in flotation tank, 0.5 hr

7.48 = conversion factor, gal to ft^3

24 = hr/day

$$VOLFT = \frac{(1 + 0.342)(0.5) \times 10^6}{7.48(24)}$$

$$\underline{VOLFT = 3738\ ft^3}$$

(8) Select pressure tank detention time and calculate volume of pressure tank.

$$VOLPT = \frac{R(DTPT)10^6}{7.48(24)60}$$

where

VOLPT = volume of pressure tank, ft^3

R = recycle flow, 0.342 mgd

DTPT = detention time in pressure tank, 3 min

7.48 = conversion factor, gal to ft^3

24 = hr/day

60 = min/hr

$$VOLPT = \frac{0.342(3)10^6}{7.48(24)60}$$

$$\underline{VOLPT = 95\ ft^3}$$

(9) Calculate volume of sludge

$$VS = \frac{Q(C_o)(\%\ removed)}{C_F(specific\ gravity)}$$

where

VS = volume of sludge, gpd

Q = average flow, 1 mgd

C_o = suspended solids concentration, 200 mg/ℓ

% removed = 80%

C_F = solids concentration in float, 5%

Specific gravity = 1.05

$$VS = \frac{1(200)80}{5(1.05)}$$

$$\underline{VS = 3048\ gpd}$$

5-40. Cost Data. Appropriate cost data and economic evaluation may be found in Chapter 8.

5-41. Bibliography.

a. Burd, R. S., "A Study of Sludge Handling and Disposal," Publication WP-20-4, May 1968, Federal Water Pollution Control Administration, Washington, D. C.

b. Eckenfelder, W. W., Jr., Industrial Water Pollution Control, McGraw-Hill, New York, 1966.

c. Eckenfelder, W. W., Jr., Water Quality Engineering for Practicing Engineers, Barnes and Nobel, New York, 1970.

d. Eckenfelder, W. W., Jr., and Ford, D. L., Water Pollution Control, Pemberton Press, New York, 1970.

e. Metcalf and Eddy, Inc., Wastewater Engineering; Collection, Treatment, and Disposal, McGraw-Hill, New York, 1972.

f. Roy F. Weston, Inc., "Process Design Manual for Upgrading Existing Wastewater Treatment Plants," prepared for the U. S. Environmental Protection Agency, Technology Transfer, Oct 1971, Washington, D. C.

g. Stander, G. J. and Van Vuuren, L. R. J., "Flotation of Sewage and Waste Solids," Advances in Water Quality Improvements - Physical and Chemical Processes, E. F. Gloyna and W. W. Eckenfelder, Jr., ed., University of Texas Press, Austin, 1970.

h. U. S. Environmental Protection Agency, Technology Transfer Seminars, "Sludge Handling and Disposal," 11-12 Dec 1973, Washington, D. C.

i. Van Vuuren, L. R. J. et al., "Dispersed Air Flocculation/Flotation for Stripping of Organic Pollutants from Effluents," Water Research, Vol 2, 1968, pp 177-183.

j. Vrablik, E. R., "Fundamental Principles of Dissolved-Air Flotation of Industrial Wastes," Proceedings, 14th Industrial Waste Conference, 1959, Purdue University, Lafayette, Ind.

Table 5-6. Air Flotation Parameters

Parameter	Typical Value		Paragraph (5-41)
	Thickening	Clarification	
Air pressure, psig	40 to 70	40 to 70	f
Effluent recycle, %	130 to 150	30 to 120	f
Detention time, hr	3	0.25 to 0.5	f,b
Air-to-solids ratio (lb air/lb solids)	(0.005 to 0.06)		e,f
Solid loading, $lb/ft^2/day$			e
Activated sludge (mixed liquor)	5 to 15		e e
Activated sludge (settled)	10 to 20		e e
50% primary +50% activated	20 to 40		e
Primary only	To 55		e
Hydraulic loading, gpm/ft^2	0.2 to 4	1 to 4	b,e
Detention time, min (pressurizing tank)	1 to 3	1 to 3	b,a

(next page is 5-57)

Section VII. THICKENING (Gravity)

5-42. Background.

a. General.

(1) Thickening reduces the moisture content of a slurry. Thickening is used at most waste treatment plants, as an ecomomic measure, to reduce the volume of sludge or for greater efficiency in subsequent processes. Thickening is normally accomplished by gravity or flotation thickeners; centrifuges have also been used as sludge thickeners.

(2) Gravity thickening is discussed below; air flotation and centrifugation are discussed under separate headings.

b. Gravity Thickening.

(1) Gravity thickening is the most common process currently used for dewatering and for the concentration of sludge prior to digestion. Gravity thickening is essentially a sedimentation process similar to that which occurs in all settling tanks. The process is simple and is the least expensive of the available thickening processes.

(2) Gravity thickening may be classified as plain settling and mechanical thickening. Plain settling usually results in the formation of scum at the surface and stratification of sludges near the bottom. Sludges from secondary clarifiers usually cannot be concentrated by plain settling. Gentle agitation is usually employed to stir the sludge, thereby opening channels for water escape and promoting densification. A common mechanical thickener consists of a circular tank equipped with a slowly revolving sludge collector. Primary and secondary sludges are usually mixed prior to thickening. A ratio of secondary sludge to primary sludge of 8 to 1 or greater is recommended to assure aerobic conditions in the thickener. Chlorine has been used to prevent sludge septicity and gasification which interfere with optimum solids concentration of organic materials. A chlorine residual of 0.5 to 1.0 mg/ℓ in the thickening tank overhead prevents such problems. Organic polyelectrolytes (anionic, nonionic, and cationic) have been used successfully to increase the sludge settling rates, the overflow clarity, and the allowable tank loading.

c. Design of Thickeners. In the design of thickeners, concentration of the underflow and clarification of the overflow must be achieved. Mechanical thickeners (fig. 5-6) are designed on the basis

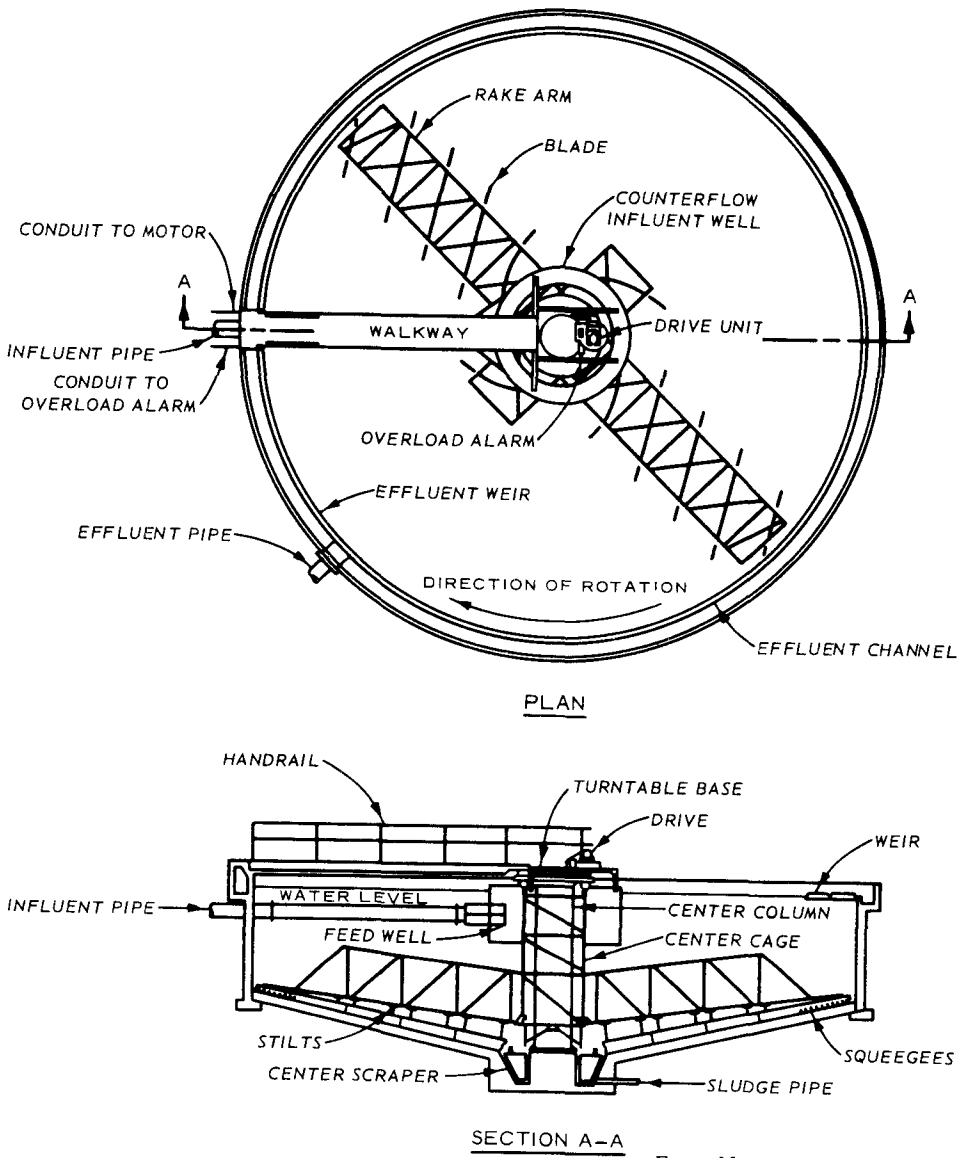

From Metcalf and Eddy, 1972

Figure 5-6. Schematic of a mechanical thickener.

of hydraulic surface loading and solid loading. These parameters are normally obtained from laboratory batch settling tests. Procedures for conducting the tests and evaluating the design parameters are well documented in literature (para 5-49c, d, e, f). In the absence of laboratory data, Table 5-7 may be used as a guide for selecting solid

loading rates. Typical surface loading rates of 600 to 800 gpd/ft^2 are recommended for most thickeners. Hydraulic loading rates of less than 400 gpd/ft^2 were reported to produce odor problems (para 5-49 h). Detention time of the thickener may range between 2 and 4 hr. Gravity thickening is the most common method currently used at wastewater treatment plants for concentrating sludges.

5-43. Input Data.

a. Sludge flow (Q), gpd.

(1) Average daily flow (Q_{avg}), gpd.

(2) Maximum flow (Q_{max}) and minimum flow (Q_{min}), gpd.

b. Solids concentration (C_o), percent = (mg/ℓ) × 10^{-4}.

Note: 1 percent solids = 0.624 lb/ft^3.

5-44. Design Parameters.

a. Desired underflow concentration (C_u), lb/ft^3 = (mg/ℓ × 0.624 × 10^{-4}).

b. Mass loading (ML), lb/ft^2/day (from settling test).

c. Hydraulic loading (HL), gpd/ft^2 (400 to 800 gpd/ft^2).

d. Detention time (t), hr (2 to 6 hr).

e. Number of tanks (N).

5-45. Design Procedure.

a. Calculate unit area, using data from settling test.

$$UA = \frac{\frac{1}{C_i} - \frac{1}{C_u}}{U_i} \times \frac{1}{0.624}$$

where

UA = unit area, ft^2/lb/day

C_i = solids concentration at settling velocity U_i, percent

$= (mg/\ell) \times (10^{-4}) = \frac{C_o H_o}{H_i}$ (settling test, Fig. 5-7)

C_o = initial solids concentration, percent = $(mg/\ell) \times (10^{-4})$

H_o = initial height, ft

H_i = intercept of tangent to the settling curve, ft (Fig. 5-7)

C_u = underflow concentration, percent

U_i = settling velocity at the interface, ft/day (settling velocity, Fig. 5-7)

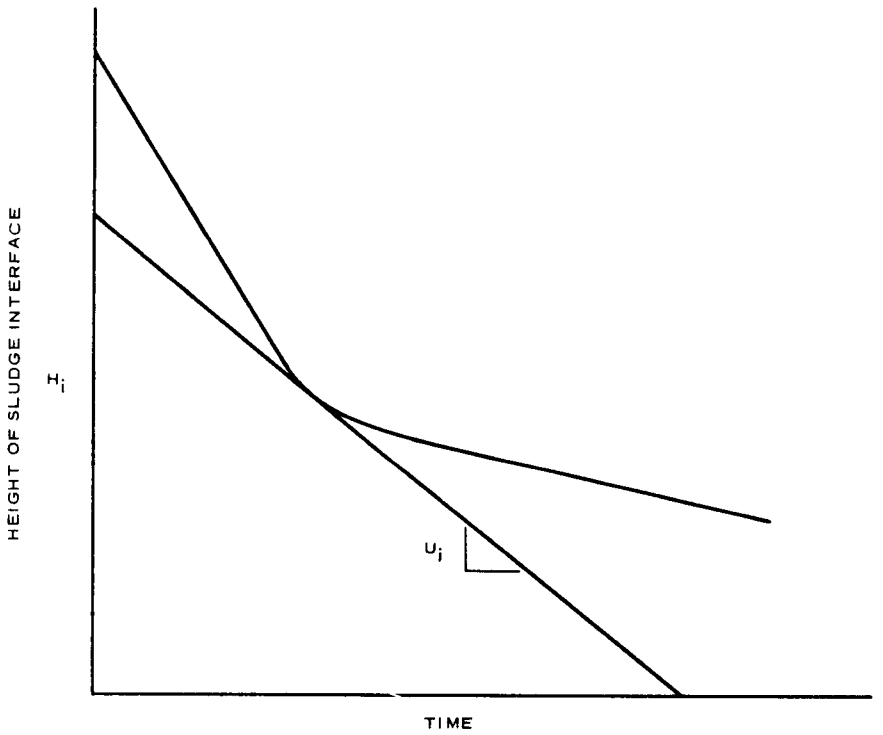

Figure 5-7. Typical settling curve from laboratory test.

b. Calculate mass loading.

$$ML = \frac{1}{UA}$$

where

ML = mass loading, $lb/ft^2/day$

UA = unit area, $ft^2/lb/day$

c. If settling data are not available, select mass loading from Table 5-7.

d. Calculate total surface area.

$$TSA = \frac{(Q_{avg})(C_o)(0.624)}{(ML)(7.48)}$$

where

TSA = total surface area, ft^2

Q_{avg} = average daily flow, gpd

C_o = initial solids concentration, percent

ML = mass loading, $lb/ft^2/day$

e. Check hydraulic loading.

$$HL = \frac{Q_{min}}{SA} \quad (\geq 400 \text{ gpd/ft}^2)$$

$$HL = \frac{Q_{max}}{SA} \quad (\leq 800 \text{ gpd/ft}^2)$$

where

HL = hydraulic loading, gpd/ft^2

Q_{min} = minimum flow, gpd

Q_{max} = maximum flow, gpd

SA = surface area, ft^2

f. Select number of tanks and calculate surface area per tank.

$$SAPT = \frac{TSA}{N}$$

where

SAPT = surface area per tank, ft^2

TSA = total surface area, ft^2

N = number of tanks

g. Select a detention time (2 to 6 hr) and calculate tank volume.

$$V = (Q_{avg})(t)\left(\frac{1}{24}\right)\left(\frac{1}{7.48}\right)$$

where

V = volume, ft^3

Q_{avg} = average daily flow, gpd

t = detention time, hr

h. Calculate depth.

$$D = \frac{(V)}{(SAPT)}$$

where

D = depth, ft

V = volume, ft^3

SAPT = surface area per tank, ft^2

i. Calculate volume of thickened sludge.

$$VTS = \frac{(Q)(C_o)(\%\ \text{recovery}/100)}{(C_u)(\text{specific gravity})}$$

where

VTS = volume of thickened sludge, gpd

Q = sludge flow, gpd

C_o = initial solid concentration, percent

C_u = desired underflow concentration, percent

5-46. Output Data.

a. Average sludge flow, mgd.

b. Initial concentration, percent.

c. Thickened concentration, percent

d. Mass loading, $lb/ft^2/day$.

e. Hydraulic loading, $gal/day/ft^2$.

f. Detention time, hr.

g. Number of units.

h. Depth, ft.

i. Volume, ft^3.

j. Surface area per tank, ft^2.

k. Volume of thickened sludge, gpd.

5-47. Example Calculations. Design of a gravity thickener is dependent on performing laboratory batch settling tests. Therefore, no example calculations are presented here.

5-48. Cost Data. Appropriate cost data and economic evaluation may be found in Chapter 8.

5-49. Bibliography.

a. Burd, R. S., "A Study of Sludge Handling and Disposal," Publication WP-20-4, May 1968, Federal Water Pollution Control Administration, Washington, D. C.

b. Dick, R. I., "Thickening," Seminar on Process Design in Water Quality Engineering, 9-13 Nov 1970, Vanderbilt University, Nashville, Tenn.

c. Eckenfelder, W. W., Jr., Industrial Water Pollution Control, McGraw-Hill, New York, 1966.

d. Eckenfelder, W. W., Jr., Water Quality Engineering for Practicing Engineers, Barnes and Nobel, New York, 1970.

e. Eckenfelder, W. W., Jr., and Ford, D. L., Water Pollution Control, Pemberton Press, New York, 1970.

f. Edde, H. J. and Eckenfelder, W. W., Jr., "Theoretical Concept of Gravity Sludge Thickening," Technical Report EHE-02-6701, CRWR-15, 1967, Center for Research in Water Resources, University of Texas, Austin.

g. Metcalf and Eddy, Inc., Wastewater Engineering; Collection, Treatment, and Disposal, McGraw-Hill, New York, 1972.

h. Roy F. Weston, Inc., "Process Design Manual for Upgrading Existing Wastewater Treatment Plants," prepared for the U. S. Environmental Protection Agency, Technology Transfer, Oct 1971, Washington, D. C.

i. U. S. Environmental Protection Agency, Technology Transfer Seminars, "Sludge Handling and Disposal," 11-12 Dec 1973, Washington, D. C.

Table 5-7. Concentrations of Unthickened and Thickened Sludges and Solids Loadings for Mechanical Thickeners

Type of Sludge	Sludge, Solid, percent		Solids Loading for Mechanical Thickeners
	Unthickened	Thickened	$lb/ft^2/day$
Separate sludges			
Primary	2.5 to 5.5	8.0 to 10.0	20 to 30
Trickling filter	4.0 to 7.0	7.0 to 9.0	8 to 10
Modified aeration	2.0 to 4.0	4.3 to 7.9	7 to 18
Activated	0.5 to 1.2	2.5 to 3.3	4 to 18
Combined sludges			
Primary and trickling filter	3.0 to 6.0	7.0 to 9.0	12 to 20
Primary and modified aeration	3.0 to 4.0	8.3 to 11.6	12 to 20
Primary and activated	2.6 to 4.8	4.6 to 9.0	8 to 16

From Metcalf and Eddy, 1972

(next page is 5-67)

Section VIII. SEDIMENTATION (Primary Clarifier)

5-50. Introduction. Sedimentation is a solid-liquid separation process designed primarily to remove the suspended particles that are heavier than water. This process is the most popular and the most widely used process in waste treatment. Sedimentation removes grit, removes the settleable fraction of the suspended solids from raw wastes in primary clarifiers, separates the biological floc from the mixed liquor in the final clarifier of a biological treatment system, separates the chemical floc from the supernatant in physical-chemical systems, and concentrates sludges in thickeners.

5-51. Classification. Sedimentation may be classified into four categories, depending on the characteristics of the suspension.

a. Discrete Settling. Suspended solids in this case are discrete particles which retain their identity, size, shape, and settling velocity during the settling process. The main factor influencing the efficiency of the process is the overflow rate expressed as gal/ft^2/day. All particles with settling velocities greater than the design overflow rate will be removed. Particles with settling velocities less than the design overflow rate will be removed in proportion to the ratio of their settling velocities to the design overflow rate. This type of settling normally occurs in a grit chamber.

b. Flocculant Settling. In this type of settling, particles flocculate and agglomerate during settling with changes in size, shape, and density. The settling velocity increases as the particles grow larger. The settling characteristics of the flocculant suspension can be determined through laboratory settling tests. Efficiency of removal is influenced by both the overflow rate and the detention time. Flocculant settling normally occurs in a primary clarifier.

c. Zone Settling. This type of settling normally occurs with activated sludge. Particles adhere to each other and settle as a blanket, forming a distinct solid-liquid interface at the top of the settling zone. Removal efficiency is influenced by mass loading, overflow rate, and detention time. Batch sedimentation tests are usually performed to evaluate these characteristics for industrial waste suspensions.

d. Compression Settling. In this case, the concentration of the suspension is so great that the particles rest on each other at the bottom of the sedimentation basin. This type of settling occurs in a sludge thickener.

5-52. Background.

a. Primary clarifiers are normally used in conjunction with biological waste treatment systems to remove the settleable solids and a fraction of the BOD, thereby reducing the load on the biological systems. Efficiently designed and operated, primary clarifiers can remove 50 to 65 percent of the suspended solids and 25 to 35 percent of the 5-day BOD.

b. Primary clarifiers are usually keyed to the overflow rates (gal/day/ft^2) and detention times. Detention times of 2 to 3 hr, based on average flows, are recommended. Surface loading rates usually depend on the characteristics of the suspension to be separated. Batch laboratory studies may be used to determine the optimum design parameters for a specific suspension. Typical values for various suspensions are reported in Table 5-8. Ten State Standards (para 5-59e) recommends a surface loading not to exceed 600 gal/day/ft^2 for small plants (1 mgd or less). Relationship of overflow rates, detention times, and tank depths are presented in Table 5-9.

c. Outlet design and arrangement have been reported to affect the efficiency of the primary clarifier. Weir loadings, defined in the Ten State Standards, should not exceed 10,000 gpd/ft for small plants (1 mgd or less) and 15,000 gpd/ft for larger plants.

d. Primary clarifiers, rectangular or circular (fig. 5-8), are usually cleaned mechanically. Two tanks should be provided to allow for maintenance and repair work.

e. The volume of sludge produced in primary settling tanks depends on several factors which include the characteristics of the raw waste, the design of the clarifier, the condition of the removed solids, and the period between sludge removals (para 5-59a). Sludge should be removed continuously or at least once per shift (more frequently in hot weather) to avoid deterioration of the effluent quality. Specific gravities of several types of sludge are shown in Table 5-10.

f. Primary sedimentation may be used in both biological treatment systems and physical-chemical systems. Figure 5-8 shows typical primary sedimentation tanks.

5-53. Input Data.

a. Wastewater flow.

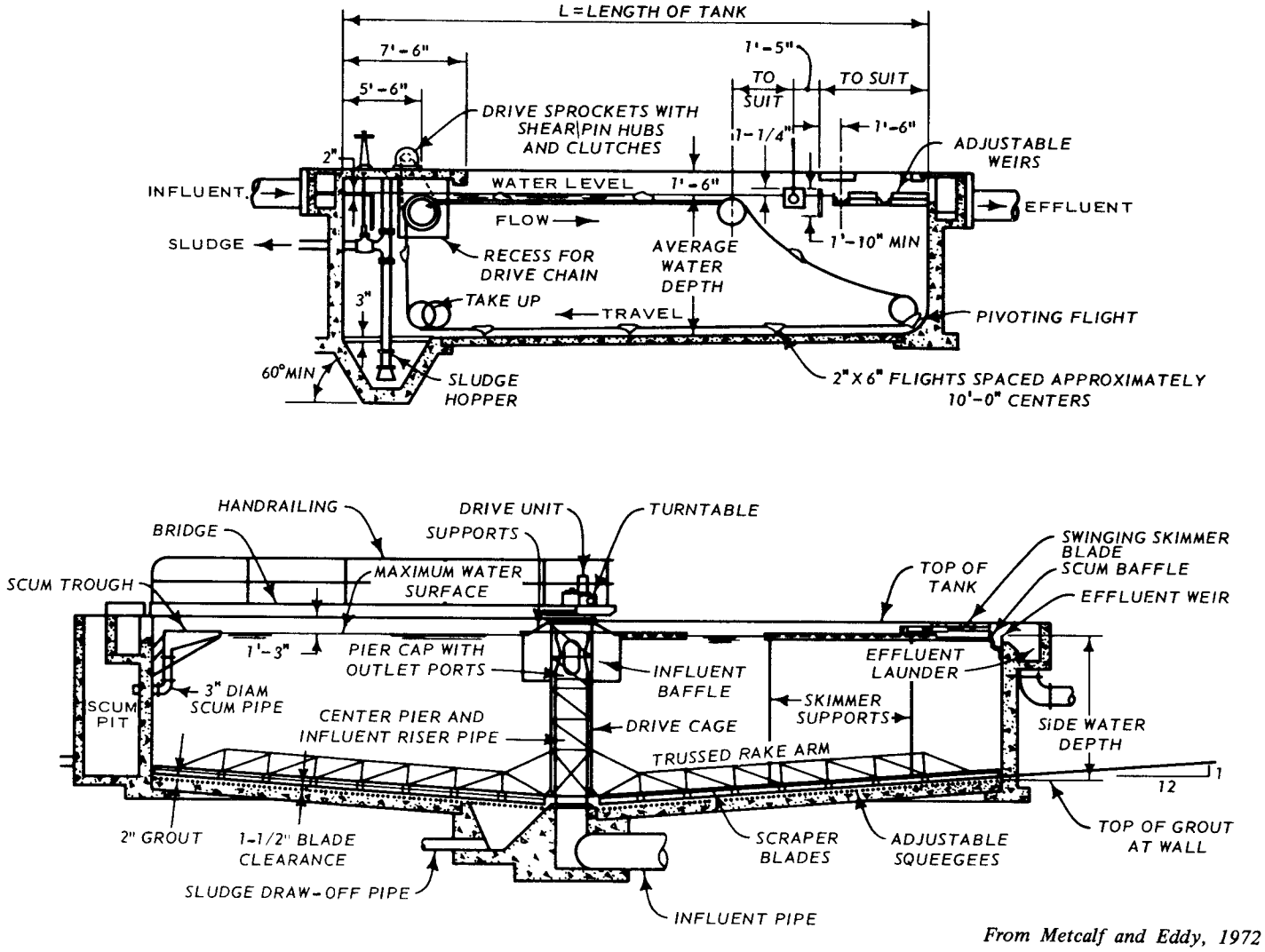

From Metcalf and Eddy, 1972

Figure 5-8. Schematics of typical primary sedimentation tank.

(1) Average flow, mgd.

(2) Peak flow, mgd.

b. Suspended solids, mg/ℓ.

c. Volatile suspended solids, percent.

d. BOD_5 concentration, mg/ℓ.

5-54. Design Parameters.

a. Overflow rate, gpd/ft^2. See Tables 5-8 and 5-9.

b. Detention time, hr. See Table 5-9.

c. Specific gravity of sludge. See Table 5-10.

d. Solids content of underflow, percent (4 to 6 percent).

e. Removal efficiencies.

(1) Suspended solids, percent. See Figure 5-9.

(2) BOD_5, percent. See Figure 5-10.

f. Weir loading, gpd/ft (10,000 to 15,000 gpd/ft).

5-55. Design Procedure.

a. Select an overflow rate by using Table 5-8 or by laboratory methods and calculate surface area.

$$SA = \frac{Q_p \times 10^6}{OFR}$$

where

SA = surface area, ft^2

Q_p = peak flow, mgd

OFR = overflow rate, gal/ft^2/day

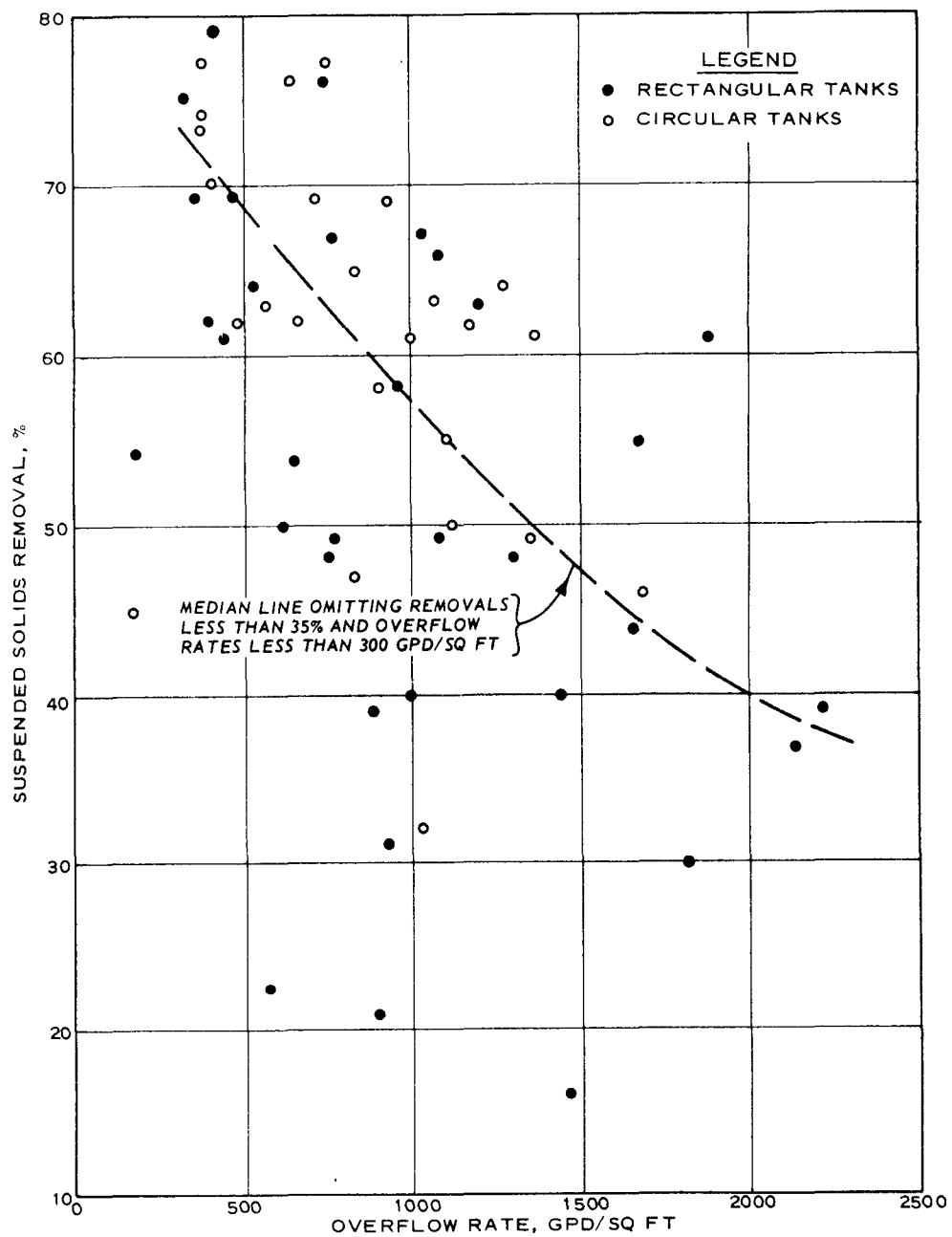

Figure 5-9. Suspended solids removal versus overflow rate for primary clarifiers.

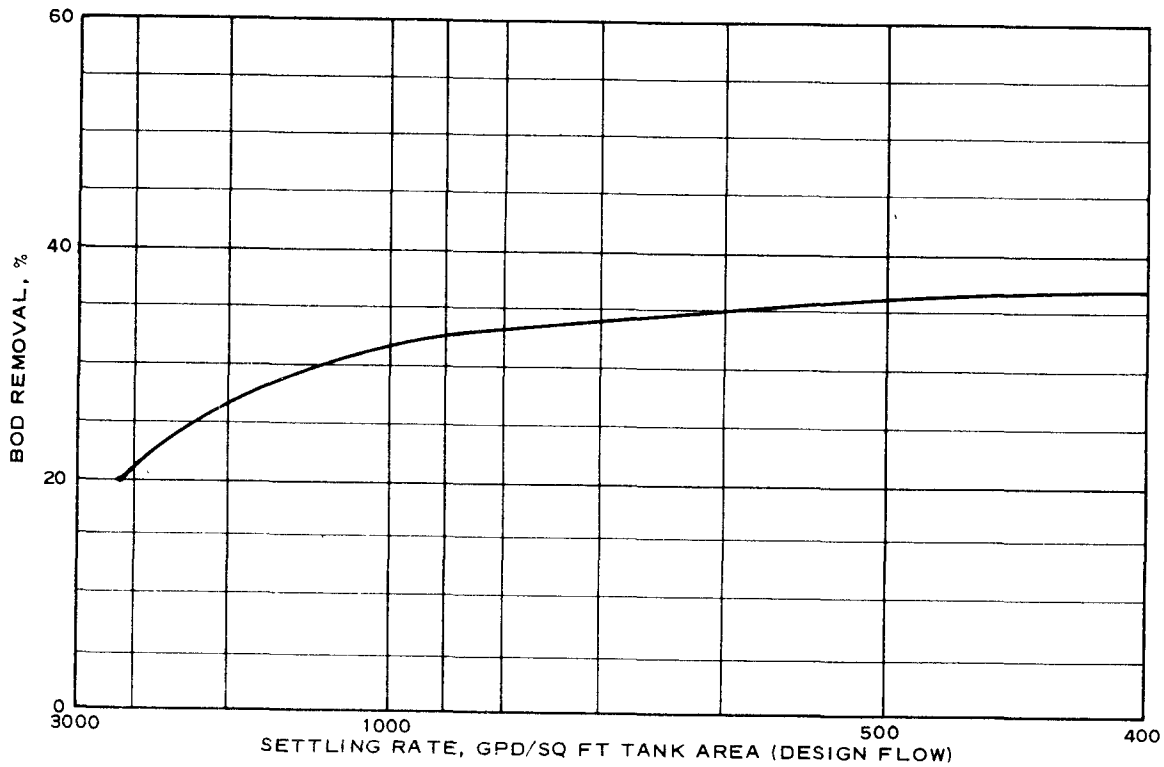

Figure 5-10. BOD removal rate in primary clarifier.

b. Select detention time and calculate volume (see Table 5-9).

$$V = (Q_{avg})(t) \times \frac{1}{7.48} \times \frac{1}{24} \times 10^6$$

where

V = volume of tank, ft^3

Q_{avg} = average flow, mgd

t = time, hr

c. Calculate side water depth.

$$SWD = \frac{V}{SA}$$

where

SWD = side water depth, ft

V = volume, ft^3

SA = surface area, ft^2

d. Check solid loading rate.

$$SLR = \frac{(Q_{avg})(SSI)(8.34)}{(SA)}$$

where

SLR = solid loading rate, $lb/ft^2/day$

Q_{avg} = average flow, mgd

SSI = influent solids concentration, mg/ℓ

SA = surface area, ft^2

e. Select weir loading rate and calculate weir length.

$$WL = \frac{Q_P}{WLR} \times 10^6$$

where

WL = weir length, ft

Q_p = peak flow, mgd

WLR = weir loading rate, gal/ft/day

f. Determine percentage of suspended solids removed from Figure 5-9.

g. Calculate amount of primary sludge produced.

$$PSP = (Q_{avg})(SSI)(SSR)(10^{-2})(8.34)$$

where

PSP = primary sludge produced, lb/day

Q_{avg} = average flow, mgd

SSI = influent solids concentration, mg/ℓ

SSR = suspended solids removed, percent (50 to 60 percent for municipal systems)

h. Select underflow concentration (3 to 6 percent) and sludge specific gravity (Table 5-10), and calculate the volume flow of primary sludge produced.

$$VPSP = \frac{PSP(100)}{(\text{specific gravity})(UC)(8.34)}$$

where

VPSP = volume flow of primary sludge produced, gal/day

PSP = primary sludge produced, gal/day

UC = underflow concentration (3 to 6 percent)

i. Determine BODR in primary clarifier (25 to 35 percent in municipal systems), or select BODR from Figure 5-10, and calculate primary effluent characteristics.

$$SSE = (SSI)\left(1 - \frac{SSR}{100}\right)$$

$$BODE = (BODI)\left(1 - \frac{BODR}{100}\right)$$

where

SSE = primary effluent suspended solids, mg/ℓ

SSI = influent solids concentration, mg/ℓ

BODE = primary effluent BOD, mg/ℓ

BODI = influent BOD, mg/ℓ

BODR = BOD removal in primary clarifier, percent

5-56. Output Data.

a. Overflow rate, gal/ft^2/day.

b. Surface area, ft^2.

c. Side water depth, ft.

d. Detention time, hr.

e. Solid loading, lb/ft^2/day.

f. Weir loading, gal/ft/day.

g. Weir length, ft

h. Volume of sludge produced, gal/day.

i. Suspended solids removal, percent.

j. BOD removal, percent.

k. COD removal, percent.

l. TKN removal, percent.

m. PO_4 removal, percent.

n. Effluent BOD, mg/ℓ.

o. Effluent suspended solids, mg/ℓ.

p. Effluent COD, mg/ℓ.

q. Effluent TKN, mg/ℓ.

5-57. Example Calculations.

a. Select an overflow rate and calculate surface area.

$$SA = \frac{Q_p \times 10^6}{OFR}$$

where

SA = surface area, ft^2

Q_p = peak flow, 2 mgd

OFR = overflow rate, 600 gpd/ft^2

$$SA = \frac{2 \times 10^6}{600}$$

$$\underline{SA = 3333\ ft^2}$$

b. Select detention time and calculate volume.

$$V = \frac{Q_{avg}\ t \times 10^6}{7.48(24)}$$

where

V = volume, ft^3

Q_{avg} = average flow, 1 mgd

t = detention time, 2.4 hr

7.48 = conversion factor, gal to ft^3

24 = hr/day

$$V = \frac{1(2.4)10^6}{7.48(24)}$$

$$\underline{V = 13,369 \text{ ft}^3}$$

c. Calculate side water depth.

$$SWD = \frac{V}{SA}$$

where

SWD = side water depth, ft

V = volume, 13,369 ft^3

SA = surface area, 3333 ft^2

$$SWD = \frac{13,369}{3,333}$$

$$\underline{SWD = 4.0 \text{ ft}}$$

d. Check solids loading rate.

$$SLR = \frac{Q_{avg}(SSI)8.34}{SA}$$

where

SLR = solids loading rate, $lb/ft^2/day$

Q_{avg} = average flow, 1 mgd

SSI = influent suspended solids, 200 mg/ℓ

8.34 = conversion factor, mg/ℓ to lb/million gal

SA = surface area, 3333 ft^2

$$SLR = \frac{1(200)8.34}{3333}$$

$$SLR = \underline{0.5\ lb/ft^2/day}$$

e. Select weir loading rate and calculate weir length.

$$WL = \frac{Q_p}{WLR} \times 10^6$$

where

WL = weir length, ft

Q_p = peak flow, 2 mgd

WLR = weir loading rate, 6000 gpd/ft

$$WL = \frac{2}{6000} \times 10^6$$

$$\underline{WL = 333\ ft}$$

f. Determine percentage of suspended solids removed. <u>SSR = 60%</u>.

g. Calculate amount of primary sludge produced.

$$PSP = Q_{avg}(SSI)SSR(10^{-2})8.34$$

where

PSP = primary sludge produced, lb/day

Q_{avg} = average flow, 1 mgd

SSI = suspended solids concentration, 200 mg/ℓ

SSR = suspended solids removed, 60%

10^{-2} = conversion factor, % to decimal

8.34 = conversion factor, mg/ℓ to lb/million gal

$$PSP = 1(200)(60)10^{-2}(8.34)$$

$$\underline{PSP = 1000 \text{ lb/day}}$$

h. Select underflow concentration and sludge specific gravity and calculate the volume flow of primary sludge produced.

$$VPSP = \frac{PSP(100)}{(\text{specific gravity})UC(8.34)}$$

where

VPSP = volume flow of primary sludge produced, gal/day

PSP = primary sludge produced, 1000 gpd

100 = conversion factor, % to decimal

Specific gravity = 1.03

UC = underflow concentration, 3%

8.34 = conversion factor, mg/ℓ to lb/million gal

$$VPSP = \frac{1000(100)}{1.03(3)8.34}$$

$$\underline{VPSP = 3880 \text{ gpd}}$$

i. Select BODR and calculate primary effluent characteristics.

$$SSE = SSI\left(1 - \frac{SSR}{100}\right)$$

$$BODE = BODI\left(1 - \frac{BODR}{100}\right)$$

where

SSE = effluent suspended solids, mg/ℓ

SSI = influent suspended solids, 200 mg/ℓ

SSR = percent removal suspended solids, 60%

BODE = effluent BOD, mg/ℓ

BODI = influent BOD, 200 mg/ℓ

BODR = percent removal of BOD, 36%

$$SSE = 200 \left(1 - \frac{60}{100}\right)$$

$$\underline{SSE = 80 \text{ mg}/\ell}$$

$$BODE = 200 \left(1 - \frac{36}{100}\right)$$

$$\underline{BODE = 128 \text{ mg}/\ell}$$

5-58. Cost Data. Appropriate cost data and economic evaluation may be found in Chapter 8.

5-59. Bibliography.

a. American Society of Civil Engineers and the Water Pollution Control Federation, "Sewage Treatment Plant Design," Manual of Practice No. 8, 1959, 1961, 1967, 1968, Water Pollution Control Federation, Washington, D. C.

b. Burns and Roe, Inc., "Process Design Manual for Suspended Solids Removal," prepared for the U. S. Environmental Protection Agency, Technology Transfer, Oct 1971, Washington, D. C.

c. Camp, T. R., "Sedimentation and the Design of Settling Tanks," Transactions, American Society of Civil Engineers, Vol 111, Part III, 1946, pp 895-952.

d. Culp, G. L., Hsuing, K., and Conley, W. R., "Tube Clarification

Process, Operation Experience," Journal, Sanitary Engineering Division, American Society of Civil Engineers, Vol 95, SA5, 1969, pp 829-848.

e. Great Lakes-Upper Mississippi River Board of State Sanitary Engineers, "Recommended Standards for Sewage Works (Ten States Standards)," 1971, Health Education Service, Albany, N. Y.

f. Hansen, S. P., Culp, G. L., and Stukerberg, J. R., "Practical Application of Idealized Sedimentation Theory in Wastewater Treatment," Journal, Water Pollution Control Federation, Vol 41, Aug 1969, pp 1421-1444.

g. McLaughlin, R. T., "The Settling Properties of Suspensions," Journal, Hydraulic Division, American Society of Civil Engineers, Part I, Paper No. 2311, Vol 85, No. HY12, 1959, pp 9-41.

h. Metcalf and Eddy, Inc., Wastewater Engineering; Collection, Treatment, and Disposal, McGraw-Hill, New York, 1972.

i. Wallace, A. T., "Design and Analysis of Sedimentation Basins," Proceedings, Sixth Annual Sanitary and Water Resources Engineering Conference, Technical Report No. 13, 1967, pp 119-128, Department of Sanitary and Water Resources Engineering, Vanderbilt University, Nashville, Tenn.

Table 5-8. Recommended Surface-Loading Rates for Various Suspensions

Suspension	Loading Rate, gpd/ft^2	
	Range	Peak Flow
Untreated wastewater	600 to 1200	1200
Alum floc[a]	360 to 600	600
Iron floc[a]	540 to 800	800
Lime floc[a]	540 to 1200	1200

[a] Mixed with the settleable suspended solids in the untreated wastewater and colloidal or other suspended solids swept out by the floc.

From Metcalf and Eddy, Inc., 1971

Table 5-9. Detention Times for Various Surface-Loading Rates and Tank Depths

Surface-Loading Rate, gpd/ft^2	Detention Time, hr			
	7-ft Depth	8-ft Depth	10-ft Depth	12-ft Depth
400	3.2	3.6	4.5	5.4
600	2.1	2.4	3.0	3.6
800	1.6	1.8	2.25	2.7
1000	1.25	1.4	1.8	2.2

From Metcalf and Eddy, Inc., 1971

Table 5-10. Specific Gravity of Raw Sludge Produced from Various Types of Sewage

Type of Sewerage System	Strength of Sewage	Specific Gravity
Sanitary	Weak	1.02
Sanitary	Medium	1.03
Combined	Medium	1.05
Combined	Strong	1.07

From Metcalf and Eddy, Inc., 1971

Section IX. SEDIMENTATION (Secondary Clarifier)

5-60. Background.

a. The final clarifier performs a vital role in a secondary waste treatment system. In the activated sludge process, the final clarifier must provide an effluent low in suspended solids and an underflow of sufficient concentration to maintain a sufficient population of active microbial mass in the aeration tank. Final clarifiers are, therefore, designed to provide clarification, as well as thickening.

b. In addition to being governed by the overflow rate and detention time, the design of final clarifiers must be based on solid loading rates (lb solids/ft^2/day). Surface overflow rates and detention times recommended by the Ten State Standards (para 5-67f) are presented in Table 5-11. Typical values of overflow rates recommended for the design of secondary clarifiers include 600 gal/ft^2/day for smaller plants (up to 1 mgd), and up to 800 gal/ft^2/day for larger plants. The design calculations should consider the peak incoming wastewater flow; the return sludge flow rate is not included since, in most secondary clarifiers, the return sludge withdrawal takes place at a point very near the inlet to the tank. Solids loading rates for various mixed liquor suspended solids are illustrated in Figure 5-11. Typical solids loading rates reported range from 12 to 30 lb/ft^2/day. Solid concentration of the underflow ranges from 0.8 to 1.20 percent, by weight.

c. The performance of the final clarifiers is also affected by the method of sludge withdrawal. The preferred sludge collection mechanism is a vacuum- or suction-type draw off (para 5-67b). The plow-type collectors with the chain and flight mechanism in rectangular basins or the bridge with attached plows in circular basins ineffectively concentrate the waste activated sludge.

d. The bibliography (para 5-67) contains excellent discussions on the design and operation of final clarifiers.

5-61. Input Data.

a. Wastewater flow.

(1) Average daily flow, mgd.

(2) Peak flow, mgd.

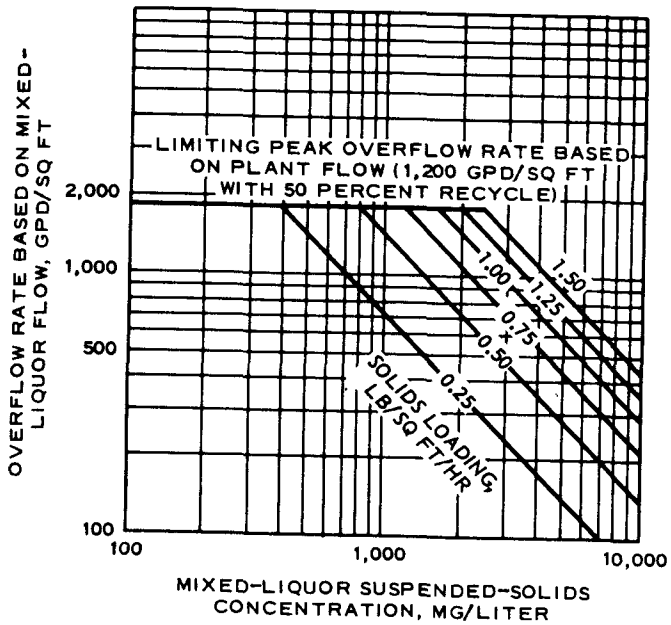

Figure 5-11. Solids loading rates for various mixed liquor suspended solid concentrations.

b. Mixed liquor suspended solids, mg/ℓ.

5-62. Design Parameters.

a. Solids loading rate (lb/ft^2/day) (from Fig. 5-11) (<30 lb/ft^2/day).

b. Surface overflow rate.

(1) Small plants $\leq$600 gal/ft^2/day.

(2) Larger plants $\leq$800 gal/ft^2/day.

c. Sludge specific gravity from Table 5-10.

d. Underflow concentration (UC), percent.

(1) For activated sludge UC = 0.8-1.2 percent.

(2) For trickling filter UC = 2-4 percent.

e. Weir overflow rate = 10,000-15,000 gpd/ft/day.

f. Detention time = 2-4 hr.

5-63. Design Procedure.

a. Select a solids loading rate (fig. 5-11) and calculate the surface area.

$$SA = \frac{(Q_{avg})(MLSS)(8.34)}{SLR}$$

where

SA = surface area, ft^2

Q_{avg} = average flow, mgd

MLSS = mixed liquor suspended solids, mg/ℓ

SLR = solid loading rate, $lb/ft^2/day$

b. Check the maximum overflow rate.

$$OFR = \frac{Q_p \times 10^6}{SA}$$

where

OFR = maximum overflow rate, $gal/ft^2/day$

Q_p = peak flow, mgd

SA = surface area, ft^2

If OFR is within range, proceed to next step; if OFR is outside range, assume OFR and recalculate SA as follows.

$$SA = \frac{Q_p \times 10^6}{OFR}$$

c. Assume detention time and calculate volume.

$$V = (Q_{avg})(10^6)\left(\frac{t}{24}\right)\left(\frac{1}{7.48}\right)$$

where

V = volume, ft^3

Q_{avg} = average daily flow, mgd

t = detention time, hr

d. Calculate side water depth.

$$SWD = \frac{V}{SA}$$

where

SWD = side water depth, ft

V = volume, ft^3

SA = surface area, ft^2

e. Select weir overflow rate and calculate weir length.

$$WL = \frac{Q_p \times 10^6}{WOFR}$$

where

WL = weir length, ft

Q_p = peak flow, mgd

WOFR = weir overflow rate, gal/ft/day

5-64. Output Data.

a. Solids loading rate, $lb/ft^2/day$.

b. Surface area, ft^2.

c. Overflow rate, $gal/ft^2/day$.

d. Detention time, hr.

e. Weir overflow rate, gal/ft/day.

f. Tank side water depth, ft.

g. Weir length, ft.

h. Volume of wasted sludge, gal/day.

i. Underflow concentration, percent.

j. Effluent total BOD, mg/ℓ.

5-65. Example Calculations.

a. Select a solids loading rate and calculate the surface area.

$$SA = \frac{Q_{avg}(MLSS)8.34}{SLR}$$

where

SA = surface area, ft^2

Q_{avg} = average flow, 1 mgd

MLSS = mixed liquor suspended solids, 3000 mg/ℓ

SLR = solids loading rate, 15 $lb/ft^2/day$

8.34 = conversion factor, mg/ℓ to lb/million gal.

$$SA = \frac{1(3000)8.34}{15}$$

$$\underline{SA = 1668\ ft^2}$$

b. Check the maximum overflow rate.

$$OFR = \frac{Q_p \times 10^6}{SA}$$

where

OFR = maximum overflow rate, gal/ft^2/day

Q_p = peak flow, 2 mgd

SA = surface area, 1668 ft^2

$$OFR = \frac{2 \times 10^6}{1668}$$

$$\underline{OFR = 1199 \text{ gal/ft}^2\text{/day}}$$

This value is excess; therefore, redesign on OFR = 1000 gal/ft^2/day.

$$SA = \frac{Q_p \times 10^6}{OFR}$$

$$SA = \frac{2 \times 10^6}{1000}$$

$$\underline{SA = 2000 \text{ ft}^2}$$

$$SLR = \frac{Q_{avg}(MLSS)8.34}{SA}$$

$$SLR = \frac{1(3,000)8.34}{2,000}$$

$$\underline{SLR = 12.5 \text{ lb/ft}^2\text{/day}}$$

c. Assume detention time and calculate volume.

$$V = \frac{Q_{avg}(t)10^6}{7.48(24)}$$

where

V = volume of tank, ft^3

Q_{avg} = average flow, 1 mgd

t = detention time, 2.5 hr

7.48 = conversion factor, gal to ft^3

24 = hr/day

$$V = \frac{1(2.5)10^6}{7.48(24)}$$

$$\underline{V = 13{,}926\ ft^3}$$

d. Calculate side water depth.

$$SWD = \frac{V}{SA}$$

where

SWD = side water depth, ft

V = volume, 13,926 ft^3

SA = surface area, 2,000 ft^2

$$SWD = \frac{13{,}926}{2{,}000}$$

$$\underline{SWD = 7.0\ ft}$$

e. Select weir overflow rate and calculate weir length.

$$WL = \frac{Q_p \times 10^6}{WOFR}$$

where

WL = weir length, ft

Q_p = peak flow, 2 mgd

WOFR = weir overflow rate, 10,000 gal/ft/day

$$WL = \frac{2 \times 10^6}{10{,}000}$$

$$\underline{WL = 200\ ft}$$

5-66. Cost Data. Appropriate cost data and economic evaluation may be found in Chapter 8.

5-67. Bibliography.

a. Burns and Roe, Inc., "Process Design Manual for Suspended Solids Removal," prepared for the U. S. Environmental Protection Agency, Technology Transfer, Oct 1971, Washington, D. C.

b. City of Austin, Texas, "Design Guides for Biological Wastewater Treatment Processes," Report No. 11010ESQ, Aug 1971, U. S. Environmental Protection Agency, Washington, D. C.

c. Dick, R. I., "Fundamental Aspects of Sedimentation 2," Water and Wastes Engineering, Vol 6, No. 3, 1969, pp 44-45.

d. Dick, R. I., "Thickening," Advances in Water Quality Improvements - Physical and Chemical Processes, E. F. Gloyna and W. W. Eckenfelder, Jr., ed., University of Texas Press, Austin, Texas, 1970.

e. Eckenfelder, W. W., Jr., and O'Connor, O. J., Biological Waste Treatment, Pergamon Press, New York, 1961.

f. Great Lakes-Upper Mississippi River Board of State Sanitary Engineers, "Recommended Standards for Sewage Works (Ten States Standards)," 1971, Health Education Service, Albany, N. Y.

g. McLaughlin, R. T., "The Settling Properties of Suspensions," Journal, Hydraulic Division, American Society of Civil Engineers, Part I, Paper No. 2311, Vol 85, HY12, 1959, pp 9-41.

h. Metcalf and Eddy, Inc., Wastewater Engineering; Collection, Treatment, and Disposal, McGraw-Hill, New York, 1972.

i. Rex Chainbelt, Inc., "A Mathematical Model of a Final Clarifier," Report No. 17090FJW, Feb 1972, U. S. Environmental Protection Agency, Washington, D. C.

j. Wallace, A. T., "Design and Analysis of Sedimentation Basins," Proceedings, Sixth Annual Sanitary and Water Resources Engineering Conference, Technical Report No. 13, 1967, pp 119-128, Department of Sanitary and Water Resources Engineering, Vanderbilt University, Nashville, Tenn.

Table 5-11. Design Requirements for Final Settling Tanks

Type of Process	Average Design Flow, mgd	Detention Time, hr	Surface Settling Rates gal/day/ft^2
Conventional, modified, or "high rate" and step aeration	To 0.5	3.0	600
	0.5 to 1.5	2.5	700
	1.5 and up	2.0	800
Contact stabilization	To 0.5	3.6	500
	0.5 to 1.5	3.0	600
	1.5 and up	2.5	700
Extended aeration	To 0.05	4.0	300
	0.05 to 0.15	3.6	300
	0.15 and up	3.0	600

Note: The inlets and sludge collection and withdrawal facilities shall be designed to minimize density currents and assure rapid return of sludge to the aeration tanks. Multiple units capable of independent operation are desirable and shall be provided in all plants where design flows exceed 0.1 mgd unless other provision is made to assure continuity of treatment.

The detention time, surface settling rate, and weir overflow rate should be adjusted for the various processes to minimize the problems with sludge loadings, density currents, inlet hydraulic turbulence, and occasional poor sludge settleability.

From Ten States Standards, 1971

(next page is 5-93)

Section X. FILTRATION

5-68. Background.

a. Filtration is the removal of suspended solids through a porous medium. Until recently, filtration was used mainly in water treatment to remove suspended solids and bacteria. However, the increasing concern for abatement of water pollution and the requirements for high quality effluents from wastewater treatment facilities have resulted in the rapid, wide acceptance of filtration in wastewater treatment. Filtration is being used for the removal of biological floc from secondary effluents, phosphate precipitates from phosphate removal processes, and as a tertiary wastewater treatment operation to prepare effluents for reuse in industry, agriculture, and recreation.

b. Granular media used in filtration include sand, coal, crushed anthracite, diatomaceous earth, perlite, and powdered activated carbon. Sand filters have been mostly used in water treatment. These filters are classified into slow sand filters and rapid sand filters.

c. Slow sand filters are normally 12-30 in. deep. The sand rests on a layer of gravel which, in turn, rests on an underdrain system. The filter is usually operated at a rate of 3 gal/ft^2/hr. When the filter becomes clogged, it is normally deactivated, drained, allowed to partially dry, and the surface layer of sludge is manually removed. Since slow sand filters require large space, have high maintenance costs, and clog rapidly, their application to water treatment has been abandoned; their application to wastewater treatment has been very limited. Design and operational characteristics of slow sand filters are summarized in Table 5-12.

d. Rapid sand filters consist of a layer of sand 18-30 in. thick supported by a layer of gravel 6-18 in. thick and an underdrain system. The underdrain system not only supports the sand, but also collects the filtered water and distributes the backwash water. The gravel aids in the distribution of the wash water while preventing the loss of filter media to the underdrain. Rapid sand filters are usually operated at a rate of 2 gal/ft^2/min. The filters are cleaned by backwashing. Normally, the filter is backwashed when the head loss increases to a value approaching the actual head available or when the effluent quality begins to deteriorate. The length of time of filter runs normally depends on the quality of the feed water. The common rate of backwashing is 24-30 in./min (about 15 gal/ft^2/min) for 3-10 min. This rate results in about 30 percent expansion of the sand.

e. Rapid sand filters (fig. 5-12) are usually constructed in duplicate. The filters are commonly arranged in rows along one or both sides of a pipe gallery. Total depths of filters from water surface to underdrains range from 8 to 10 ft. A length-to-width ratio of the filter box of 3 to 6 has been found most economical. Wash water gutters must be located so that they limit the horizontal travel of dirty water during backwashing to 3 ft. As a safety factor, the top edge of the backwash gutter is normally located 6-12 in. above the allowed expansion of the sand (usually 50 percent). Backwash gutters must be designed to carry all backwash water with a minimum 3-in. free fall at the upper end. The underdrain system must be designed to carry the backwash water and to provide uniform distribution of backwash water. Some rules of thumb that have been used in the design of pipe lateral underdrain systems are shown in Table 5-13. Filter piping, design flows, and velocities are presented in Table 5-14. Design and operational characteristics of rapid sand filters are shown in Table 5-12. Typical gravel bed for pipe underdrain system is shown in Table 5-15.

f. The removal of surface material by sand filters leaves a heavy residue of removed solids on the raw water side of the filter medium. Surface filtration is extremely sensitive to suspended solids concentration in the feed water. Sand filters may quickly become clogged at the surface, resulting in an extremely short filter run, thereby limiting the practical application of sand filters in wastewater treatment.

g. One method used to increase the effective depth of filtration involves the use of dual-media or multimedia beds. The filters are composed of two or three materials of different specific gravities and sizes. The coarsest and lightest materials are placed on top; the finest and heaviest materials are on the bottom. An anthracite/sand filter is an example of a dual-media filter. Typical anthracite/sand filters may include from 12 to 24 in. of anthracite (specific gravity, 1.4-1.6) and 6 to 16 in. of sand (specific gravity, 2.65). Multimedia filters normally consist of anthracite placed on top of sand which is placed on top of garnet. Typical design data for dual-media and multimedia filters are presented in Table 5-16.

h. Another innovation introduced into filtration is the mixed media concept. For this process, the size distribution of the different media is selected to ensure intermixing between the various media at the interfaces. This mixing will prevent the formation of an impervious layer at the interface during filtration. A typical mixed dual-media filter may consist of 12 in. of sand with an effective size of 0.5-0.55 mm and a uniformity coefficient of less than 1.65, and 12 in. of crushed

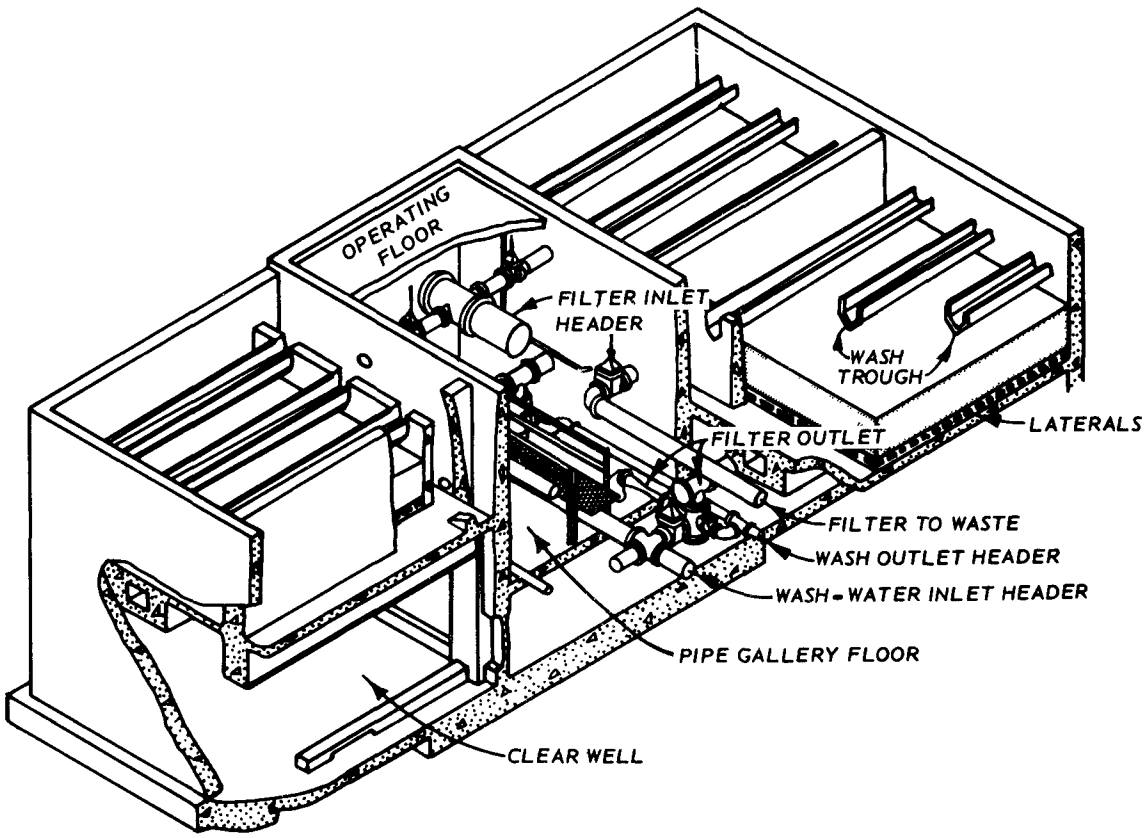

a.

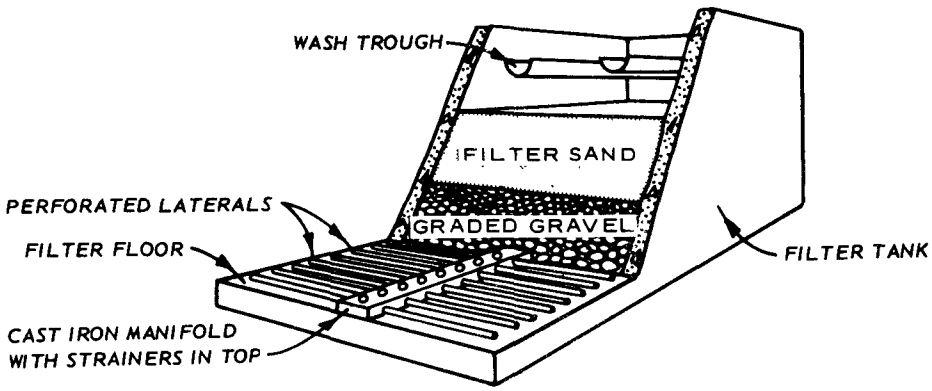

b.

Figure 5-12. Schematics of typical rapid sand filters.

anthracite coal with an effective size of 0.9-1.0 mm and a uniformity coefficient of less than 1.8. A typical mixed multimedia filter has a particle size gradation that decreases from about 2-mm anthracite at the top to about 0.15-mm garnet at the bottom. Information concerning varying mixed media designs for various types of floc removal is presented in Table 5-17. The filter piping is usually designed for the flows and velocities shown in Table 5-18.

i. A mixed-media design typically used for removal of moderate quantities of chemical floc requires a backwash rate of about 15 gpm/ft^2. The head loss through the expanded filter is 2-4 ft. The required duration for backwash water is typically 2-5 percent of the plant throughput. Surface wash is also necessary to break up the clumps. Normally, surface wash is initiated 1 min before the main backwash starts and is stopped about 1 min prior to the end of the backwash.

j. In conclusion, the design of filters depends on the influent wastewater characteristics, process and hydraulic loadings, method and intensity of cleaning, nature, size, and depth of the filtering material, and the required quality of the final effluent. In general, mixed dual-media and multimedia filters are more effective and easier and less expensive to operate than sand filters for the treatment of wastewaters; therefore, they are more widely accepted in wastewater treatment. The design of a multimedia filter is illustrated below. However, the procedure can be applied to the design of a rapid sand filter also.

5-69. Input Data.

a. Wastewater characteristics.

(1) Average daily flow, mgd.

(2) Peak flow, mgd.

b. Suspended solids, mg/ℓ.

c. Suspended solids characteristics.

(1) Biological floc.

(2) Chemical floc.

(a) Alum dose.

(b) Lime dose.

(c) Ferric chloride.

d. Temperature, °F.

e. Alkalinity.

f. pH.

5-70. Design Parameters.

a. Rate of wastewater application, gal/min/ft^2.

b. Size distribution of filter media, mean diameter, mm.

c. Approach velocity, fps.

d. Number of layers.

e. Shape factor for each layer.

f. Porosity of unexpanded bed depth.

g. Specific gravities of filter medium and of water.

h. Depth of each filter medium, ft.

i. Permeability of each layer.

j. Size distribution of gravel.

k. Depth of gravel medium, ft.

l. Desired degree of bed expansion (20-50 percent).

m. Type of underdrain system.

n. Head loss in underdrain system, ft.

o. Diameter of 60 percentile particles, d_{60}, mm.

p. Specific weight of sand, lb/ft^3.

q. Density of water, lb-sec^2/ft^4.

r. Absolute viscosity of water, centipoises.

s. Porosity of expanded bed.

t. Number of troughs.

u. Width of trough, ft.

v. Depth of underdrain, ft.

w. Operating depth of water above sand, ft.

x. Freeboard, ft.

y. Time of backwash, min.

z. Distance from top of trough to underdrain, ft.

5-71. Design Procedure.

a. Select a loading rate (filtration rate) and calculate filter surface area (Table 5-16).

$$SA = \frac{Q_{avg}(10^6)}{LR(24)(60)}$$

where

SA = surface area, ft^2

Q_{avg} = average flow, mgd

LR = loading rate, gal/min/ft^2

b. Select filter medium and evaluate size distribution and depth of each layer (Tables 5-12 and 5-16).

c. Calculate terminal head loss through filter using Kozeny equation.

$$\frac{h_f}{L} = K\left(\frac{\nu}{g}\right)\left[\frac{(1 - \varepsilon)^2}{\varepsilon^3}\right] (v)\left(\frac{\sigma_s}{d_p}\right)^2\left(\frac{1}{3.28 \times 10^{-3}}\right)^2$$

where

h_f = loss of head in depth of bed, ft

L = length, ft

K = coefficient of permeability, ≈ 6

ν = kinematic viscosity, ft^2/sec

g = gravitational acceleration, ft/sec^2

ε = porosity of layer

v = approach velocity, fps

σ_s = shape factor = (6 for spherical, 8.5 for crushed granules)

d_p = mean particle size, mm

3.28×10^{-3} = conversion factor, mm to ft

d. Calculate unit head loss through each expanded media.

$$\Delta p = D(1 - \varepsilon)(G_{s,m} - G_{s,w})$$

where

Δp = pressure drop across fluidized bed, ft

D = unexpanded bed depth, ft

ε = porosity of unexpanded media

$G_{s,m}$ = specific gravity of filter medium

$G_{s,w}$ = specific gravity of water

e. Calculate total head loss through expanded media.

$$(\Delta p)_T = \Sigma \Delta p$$

where

$(\Delta p)_T$ = total pressure drop across fluidized bed, ft

f. Calculate rate of filter backwashing for any desired expansion using the Amirtharajah method (para 5-75a) as follows.

(1) Calculate minimum fluidization velocity.

$$v_f = \frac{0.00381(d_{60})^{1.82}\left[W_s(W_m - W_s)\right]^{0.94}}{\mu^{0.88}}$$

where

v_f = minimum fluidization velocity, gpm/ft^2

d_{60} = 60 percent finer size of the sand, mm, ≈0.75

W_s = specific weight of water, lb/ft^3

W_m = specific weight of sand, lb/ft^3

μ = absolute viscosity of water, centipoises

(2) Calculate Reynolds number corresponding to the minimum fluidization velocity.

$$(R_n)_f = \frac{\rho_\ell v_f d_{60}(3.28 \times 10^{-3})}{\mu(7.48)(60)(2.09 \times 10^{-5})}$$

where

$(R_n)_f$ = Reynolds number

ρ_ℓ = density of water, lb-sec^2/ft^4

v_f = minimum fluidization velocity, gpm/ft^2

d_{60} = 60 percent finer size of the sand, mm, ≈0.75

3.28×10^{-3} = conversion factor, mm to ft

μ = absolute viscosity, centipoises

7.48 = conversion factor, ft^3 to gal

60 = conversion factor, sec to min

2.09×10^5 = conversion factor, centipoises to lb-sec/ft^2

(3) If $(R_n)_f > 10$, apply a correction factor to the calculated value of v_f as follows:

$$K_R = 1.775(R_n)_f^{-0.272}$$

where

K_R = correction factor

(4) Calculate the unhindered settling velocity as follows:

$$v_s = 8.45 v_f$$

where

v_s = unhindered settling velocity, gpm/ft^2

v_f = minimum fluidization velocity, gpm/ft^2

(5) Calculate Reynolds number based on the unhindered settling velocity.

$$(R_n)_s = \frac{\rho_\ell v_s d_{60}(3.28 \times 10^{-3})}{\mu(7.48)(60)(2.09 \times 10^{-5})}$$

where

$(R_n)_s$ = Reynolds number

ρ_ℓ = density of water, lb-sec^2/ft^4

v_s = unhindered settling velocity, gpm/ft^2

d_{60} = percent of sand ≈0.075 mm

μ = absolute viscosity, centipoises

(6) Calculate expansion coefficient as follows.

$$n_e = 4.45(R_n)_s^{-0.1}$$

where

n_e = expansion coefficient

(7) Using v_f and n_e, calculate the constant K_e for the system.

$$v_f = K_e(\varepsilon)^{n_e}$$

where

v_f = minimum fluidization velocity, gpm/ft^2

ε = porosity of unexpanded media

n_e = expansion coefficient

(8) Calculate the desired porosity at the desired bed expansion.

$$\frac{D_e}{D} = \frac{1 - \varepsilon}{1 - \bar{\varepsilon}}$$

where

D_e = depth of expanded bed, ft

D = depth of unexpanded bed, ft

ε = porosity of unexpanded bed

$\bar{\varepsilon}$ = porosity of expanded bed

(9) Calculate the backwash rate.

$$BR = K_e(\bar{\varepsilon})^{n_e}$$

where

BR = backwash rate, gpm/ft^2

K_e = system constant

$\bar{\varepsilon}$ = porosity of expanded bed

n_e = expansion coefficient

g. Select wash water troughs arrangement and calculate depth of wash water troughs.

$$Q = 2.49bh_o^{3/2}$$

where

Q = total trough flow, cfs

b = trough width, ft

h_o = trough minimum depth, ft

h. Select an underdrain system and calculate the minimum total filter depth.

$$TD = UD + GD + MD + MOD + FB$$

where

TD = total filter depth, ft

UD = depth of underdrain, ft

GD = gravel depth, ft

MD = media depth, ft

MOD = maximum operating depth of water above sand, 3-5 ft

FB = freeboard, ft

i. Calculate total head necessary to backwash water.

$$TH = HLUD + HLG + HLM + DWT$$

where

TH = total head necessary for backwash

HLUD = head loss in underdrain (manufacturer's requirement)

HLG = head loss in gravel (c above)

HLM = head loss through fluidized bed (d above)

DWT = total depth from top of wash water trough to underdrain, ft

j. Assume backwash time and calculate total backwash water needed.

$$BWW = (BR)(BWT)(SA)$$

where

BWW = total backwash water, gal

BR = backwash rate, gpm/ft^2

BWT = backwash time, min

SA = surface area, ft^2

5-72. Output Data.

a.

Layer	Depth ft	Diameter ft	Shape Factor	Specific Gravity
1	xx.x	xx.x	xx.x	xx.x
2	xx.x	xx.x	xx.x	xx.x
3	xx.x	xx.x	xx.x	xx.x
4	xx.x	xx.x	xx.x	xx.x

b. Average loading rate, gpm/ft^2.

c. Surface area, ft^2.

d. Underdrain head loss, ft.

e. Wash water gutter width, ft.

f. Wash water gutter depth, ft.

g. Terminal head loss through bed, ft.

h. Maximum head for backwashing, ft.

i. Total filter depth, ft.

j. Wash water needed, gal.

k. Backwash rate, gpm/ft^2.

5-73. Example Calculations.

a. Select a loading rate and calculate filter surface area.

$$SA = \frac{Q_{avg} 10^6}{LR(24)(60)}$$

where

SA = surface area, ft^2

Q_{avg} = average flow, 1 mgd

LR = loading rate, 6 gal/min/ft^2

24 = hr/day

60 = min/hr

$$SA = \frac{1 \times 10^6}{6(24)60}$$

$$\underline{SA = 116 \text{ ft}^2}$$

b. Select filter medium and evaluate size distribution and depth of each layer.

Anthracite

Depth = 18 in.

Effective size = 1.2 mm

Uniformity coefficient = 1.5

Sand

Depth = 12 in.

Effective size = 0.5 mm

Uniformity coefficient = 1.4

c. Calculate terminal head loss through filter using Kozeny equation.

$$\frac{h_f}{L} = K \left(\frac{\nu}{g}\right) \left[\frac{(1 - \varepsilon)^2}{\varepsilon^3}\right] v \left(\frac{\sigma_s}{d_p}\right)^2 \left(\frac{1}{3.28 \times 10^{-3}}\right)^2$$

where

h_f = head loss in depth of bed, ft

L = length, 1.5 ft anthracite, 1.0 ft sand

K = coefficient of permeability, 6

ν = kinematic viscosity, 1.088×10^{-5} ft^2/sec

g = gravitational acceleration, 32.2 ft/sec^2

ε = porosity, 0.50 anthracite, 0.40 sand

v = approach velocity, 0.04 fps

σ_s = shape factor, 8.5

d_p = mean particle size, 1.2 mm anthracite, 0.5 mm sand

3.28×10^{-3} = conversion factor, mm to ft

for anthracite

$$\frac{h_f}{1.5} = 6 \left(\frac{1.088 \times 10^{-5}}{32.2}\right) \left[\frac{(1 - 0.5)^2}{0.5^3}\right] 0.04 \left(\frac{8.5}{1.2}\right)^2 \left(\frac{1}{3.28 \times 10^{-3}}\right)^2$$

$$h_f = 1.13 \text{ ft}$$

for sand

$$\frac{h_f}{1.0} = 6 \left(\frac{1.088 \times 10^{-5}}{32.2}\right) \left[\frac{(1 - 0.4)^2}{0.4^3}\right] 0.04 \left(\frac{8.5}{0.5}\right)^2 \left(\frac{1}{3.28 \times 10^{-3}}\right)^2$$

$$\underline{h_f = 5.45 \text{ ft}}$$

$$\underline{\text{Total } h_f = 6.58 \text{ ft}}$$

d. Calculate the unit head loss through each expanded media.

$$\Delta p = D(1 - \varepsilon)\left(G_{s,m} - G_{s,w}\right)$$

where

Δp = pressure drop across fluidized bed, ft

D = unexpanded bed depth, 1.5 ft anthracite, 1.0 ft sand

ε = porosity of unexpanded media, 0.50 anthracite, 0.40 sand

$G_{s,m}$ = specific gravity media, 1.67 anthracite, 2.65 sand

$G_{s,w}$ = specific gravity water, 1.0

$$\Delta p \text{ anthracite} = 1.5(1 - 0.5)\ (1.67 - 1.0)$$

$$\underline{\Delta p = 0.50 \text{ ft}}$$

$$\Delta p \text{ sand} = 1.0(1 - 0.4)\ (2.65 - 1.0)$$

$$\underline{\Delta p = 0.99 \text{ ft}}$$

e. Calculate total head loss through expanded media.

$$(\Delta p)_T = \Sigma \Delta p$$

$$(\Delta p)_T = 0.50 + 0.99$$

$$\underline{(\Delta p)_T = 1.49 \text{ ft}}$$

f. Calculate rate of filter backwashing.

(1) Calculate minimum fluidization velocity

$$v_f = \frac{0.00381(d_{60})^{1.82}\left[W_s\left(W_m - W_s\right)\right]^{0.94}}{\mu^{0.88}}$$

where

v_f = minimum fluidization velocity, gpm/ft^2

d_{60} = 60 percent finer size of sand, 0.75 mm

W_s = specific weight of water, 62.4 lb/ft^3

W_m = specific weight of sand, 165 lb/ft^3

μ = absolute viscosity of water, 1.009 centipoises

$$v_f = \frac{0.00381(0.75)^{1.82}\ \{62.4[2.65(62.4) - 62.4]\}^{0.94}}{1.009^{0.88}}$$

$$\underline{v_f = 8.68 \text{ gpm/ft}^2 = 0.0193 \text{ fps}}$$

(2) Calculate Reynolds number corresponding to the minimum fluidization velocity.

$$\left(R_n\right)_f = \frac{\rho_\ell v_f d_{60}(3.28 \times 10^{-3})}{\mu(7.48)60(2.09 \times 10^{-5})}$$

where

$\left(R_n\right)_f$ = Reynolds number

ρ_ℓ = density of water, 1.94 lb-sec^2/ft^4

v_f = minimum fluidization velocity, 8.68 gpm/ft^2

d_{60} = 60 percent finer size of sand, 0.75 mm

μ = absolute viscosity, 1.009 centipoises

3.28×10^{-3} = conversion factor, mm to ft

7.48 = conversion factor, ft^3 to gal

2.09×10^{-5} = conversion factor, centipoises to lb-sec/ft^2

60 = conversion factor, sec to min

$$\left(R_n\right)_f = \frac{1.94(8.68)(0.75)(3.28 \times 10^{-3})}{1.009(7.48)60(2.09 \times 10^{-5})}$$

$$\underline{\left(R_n\right)_f = 4.4}$$

(3) Because $\left(R_n\right)_f < 10$, no correction factor is needed.

(4) Calculate the unhindered settling velocity as follows:

$$v_s = 8.45 v_f$$

where

v_s = unhindered settling velocity, gpm/ft^2

v_f = minimum fluidization velocity, 8.68 gpm/ft^2

$$v_s = 8.45(8.68)$$

$$\underline{v_s = 73.3 \text{ gpm/ft}^2}$$

(5) Calculate Reynolds number based on the unhindered settling velocity.

$$\left(R_n\right)_s = \frac{\rho_\ell v_s d_{60}(3.28 \times 10^{-3})}{\mu(7.48)(60)(2.09 \times 10^{-5})} = 8.45\left(R_n\right)_f$$

where

v_s = unhindered settling velocity, 73.3 gpm/ft^2

$\left(R_n\right)_f$ = Reynolds number for minimum fluidization velocity, 4.4

$(R_n)_s$ = Reynolds number for unhindered settling velocity

$$(R_n)_s = 8.45(4.4)$$

$$\underline{(R_n)_s = 37.2}$$

(6) Calculate expansion coefficient.

$$n_e = 4.4(R_n)_s^{-0.1}$$

where

n_e = expansion coefficient

$(R_n)_s$ = Reynolds number for unhindered settling velocity, 37.2

$$n_e = 4.45(37.2)^{-0.1}$$

$$\underline{n_e = 3.1}$$

(7) Calculate K_e for the system.

$$v_f = K_e(\varepsilon)^{n_e}$$

where

v_f = minimum fluidization velocity, 8.68 gpm/ft^2

K_e = constant for system

ε = porosity of unexpanded media, 0.40

n_e = expansion coefficient, 3.1

$$8.68 = K_e(0.40)^{3.1}$$

$$\underline{K_e = 149 \text{ gpm/ft}^2}$$

(8) Calculate the desired porosity at the desired bed expansion.

$$\frac{D_e}{D} = \frac{1 - \varepsilon}{1 - \bar{\varepsilon}}$$

where

D_e = depth to expanded bed, 1.2 ft

D = depth of unexpanded bed, 1.0 ft

ε = porosity of unexpanded bed, 0.40

$\bar{\varepsilon}$ = porosity of expanded bed

$$\frac{1.2}{1.0} = \frac{1 - 0.40}{1 - \bar{\varepsilon}}$$

$$\underline{\bar{\varepsilon} = 0.50}$$

(9) Calculate the backwash rate.

$$BR = K_e(\bar{\varepsilon})^{n_e}$$

where

BR = backwash rate, gpm/ft^2

K_e = constant, 149 gpm/ft^2

$\bar{\varepsilon}$ = porosity of expanded bed, 0.50

n_e = expansion coefficient, 3.1

$$BR = 149(0.50)^{3.1}$$

$$\underline{BR = 17.4\ gpm/ft^2}$$

g, h, i, and j. Calculation of trough minimum depth (h_o), total filter depth (TD), total head for backwash (TH), and backwash water needed (BWW) are dependent upon the type of equipment selected for backwashing the filter.

5-74. Cost Data. Appropriate cost data and economic evaluation may be found in Chapter 8.

5-75. Bibliography.

a. Amirtharajah, A. and Cleasby, J. L., "Predicting Expansion of Filters During Backwash," Journal, American Water Works Association, Vol 64, 1972, pp 52-59.

b. Burns and Roe, Inc., "Process Design Manual for Suspended Solids Removal," prepared for the U. S. Environmental Protection Agency, Technology Transfer, Oct 1971, Washington, D. C.

c. Camp, T. R., "Theory of Water Filtration," Journal, Sanitary Engineering Division, American Society of Civil Engineers, Vol 90, SA4, 1964, pp 1-30.

d. Cleasby, J. L., "Deep Granular Filters, Modeling and Simulation," Proceedings, Association of Environmental Engineers in Profession, Eighth Annual Workshop, 18-22 Dec 1972, Nassau.

e. Cleasby, J. L. and Baumann, E. R., "Selection of Sand Filtration Rates," Journal, American Waterworks Association, Vol 54, 1962, pp 579-602.

f. Culp, R. L. and Culp, G. L., Advanced Wastewater Treatment, Van Nostrand, New York, 1971.

g. Fair, G. M., Geyer, J. C., and Okun, D. A., Water Purification and Wastewater Treatment and Disposal; Water and Wastewater Engineering, Vol 2, Wiley, New York, 1968.

h. Hsuing, K. and Cleasby, J. L., "Prediction of Filter Performance," Journal, Sanitary Engineering Division, American Society of Civil Engineers, Vol 94, SA6, 1968, pp 1043-1070.

i. Metcalf and Eddy, Inc., Wastewater Engineering; Collection, Treatment, and Disposal, McGraw-Hill, New York, 1972.

j. O'Melia, C. R. and Stumm, W., "Theory of Water Filtration," Journal, American Water Works Association, Vol 59, Nov 1967, pp 1383-1412.

k. Tchobanoglous, F. and Elliassen, R., "Filtration of Treated Sewage Effluents," Journal, Sanitary Engineering Division, American Society of Civil Engineers, Vol 96, SA2, 1970.

l. "Water Treatment Plant Design," prepared by American Society of Civil Engineers, American Water Works Association, Conference of State Sanitary Engineers, 1969.

m. Weber, W. J., Jr., Physicochemical Processes for Water Quality Control, Wiley-Interscience, New York, 1972.

Table 5-12. General Features of Construction and Operation of Conventional Slow and Rapid Sand Filters

Feature	Slow Sand Filters	Rapid Sand Filters
Rate of filtration	1 to 3 to 10 mgad	100 to 125 to 300 mgad
Size of bed	Large, half acre	Small, 1/100 to 1/10 acre
Depth of bed	12 in. of gravel; 42 in. of sand, usually reduced to no less than 24 in. by scraping	18 in. of gravel; 30 in. of sand or less; not reduced by washing
Size of sand	Effective size 0.25 to 0.3 to 0.35 mm; coefficient of nonuniformity 2 to 2.5 to 3	0.45 mm and higher; coefficient of nonuniformity 1.5 and lower, depending on underdrainage system
Grain size distribution of sand in filter	Unstratified	Stratified with smallest or lightest grains at top and coarsest or heaviest at bottom
Underdrainage system	Split tile laterals laid in coarse stone and discharging into tile or concrete main drains	(1) Perforated pipe laterals discharging into pipe mains; (2) porous plates above inlet box; (3) porous blocks with included channels
Loss of head	0.2 ft initial to 4 ft final	1 ft initial to 8 or 9 ft final
Length of run between cleanings	20 to 30 to 60 days	12 to 24 hr
Penetration of suspended matter	Superficial	Deep
Method of cleaning	(1) Scraping off surface layer of sand and washing and storing cleaned sand for periodic resanding of bed; (2) washing surface sand and sand in place by washer traveling over sand bed	Dislodging and removing suspended matter by upward flow or backwashing, which fluidizes the bed. Possible use of water or air jets, or mechanical rakes to improve scour
Amount of wash water used in cleaning sand	0.2 to 0.6 percent of water filtered	1 to 4 to 6 percent of water filtered
Preparatory treatment of water	Generally none	Coagulation, flocculation, and sedimentation
Supplementary treatment of water	Chlorination	Chlorination
Cost of construction, U. S.	Relatively high	Relatively low
Cost of operation	Relatively low where sand is cleaned in place	Relatively high
Depreciation cost	Relatively low	Relatively high

From Fair, Geyer, and Okun, 1968

Table 5-13. Rules of Thumb for Underdrainage System

1. Ratio of area of orifice to area of bed served	$[(1.5 \text{ to } 5) \times 10^{-3}]$ to 1
2. Ratio of area of lateral to area of orifices served	(2 to 4) to 1
3. Ratio of area of main to area of laterals served	(1.5 to 3) to 1
4. Diameter of orifices	1/4 to 3/4 in.
5. Spacing of orifices	3 to 12 in. on centers
6. Spacing of laterals	Closely approximating spacing of orifices

From Fair, Geyer, and Okun, 1968

Table 5-14. Design Considerations for Various Velocities and Flow Volumes

Piping	Velocity fps	Maximum Flow per Filter Area Served gpm/ft^2
Influent	1 to 4	3 to 8
Effluent	3 to 6	3 to 8
Wash water supply	5 to 10	15 to 25
Wash water drain	3 to 8	15 to 25
Filter to waste	6 to 12	1 to 6

From American Water Works Association, 1969

Table 5-15. Typical Gravel Bed for Pipe Underdrain System

Description	No. of Layers 1	2	3	4	5
Depth of layer, in.	1	3	3	4	4
Square mesh screen opening, in.					
Passing	1	3/4	1/2	1/4	1/8
Retained	3/4	1/2	1/4	1/8	1/16

NOTE: Bottom layer should extend to a point 4 in. above the highest outlet of wash water.

From Culp and Culp, 1971

Table 5-16. Typical Design Data for Dual-Media and Multimedia Filters

Characteristic	Value: Range	Value: Typical
Dual-Media		
Anthracite		
Depth, in.	8 to 24	18.0
Effective size, mm	0.8 to 2.0	1.2
Uniformity coefficient	1.4 to 1.8	1.5
Sand		
Depth, in.	10 to 24	12.0
Effective size, mm	0.3 to 0.8	0.5
Uniformity coefficient	1.2 to 1.6	1.4
Filtration rate, gpm/ft^2	2 to 10	6.0
Multimedia		
Anthracite		
Depth, in.	8 to 20	15.0
Effective size, mm	1.0 to 2.0	1.4
Uniformity coefficient	1.4 to 1.8	1.5
Sand		
Depth, in.	8 to 16	12.0
Effective size, mm	0.4 to 0.8	0.6
Uniformity coefficient	1.2 to 1.6	1.4
Garnet[a]		
Depth, in.	2 to 4	3.0
Effective size, mm	0.2 to 0.6	0.3
Uniformity coefficient		1.0
Filtration rate, gpm/ft^2	2 to 12	6.0

[a] Garnet becomes intermixed with sand and anthracite.

From Metcalf and Eddy, 1972

Table 5-17. Typical Removals by Tahoe Mixed-Media Filters

Substance	Typical Concentrations mg/ℓ Influent	Effluent	Range % Removal
Phosphorus, total	0.65	0.05	70 to 95
Phosphorus, dissolved	0.45	0.05	65 to 90
Phosphorus, particulate	0.20	0.00	100
COD	23.00	15.00	20 to 45
BOD	9.00	5.00	40 to 70
SS	15.00	0.00	100
Turbidity, JU	7.00	0.30	60 to 95

From Culp and Culp, 1971

Table 5-18. Flows and Velocities Determining Filter Piping Design

Piping	Velocity fps	Maximum Flow per Filter Area Served gpm/ft^2
Influent	1 to 4	8 to 12
Effluent	3 to 6	8 to 12
Wash water supply	5 to 10	15 to 25
Backwash waste	3 to 8	15 to 25
Filter to waste	6 to 12	4 to 8

From Culp and Culp, 1971

Section XI. VACUUM FILTRATION

5-76. Background.

a. Vacuum filtration is one of the most widely used methods for mechanical dewatering of wastewater sludges. The process is carried out using a slowly rotating drum, the outside of which is covered by a filter medium. A portion (about 20-40 percent) of the drum is submerged in sludge in the vat below the drum. Vacuum (10-26 in. of mercury) is applied to the submerged portion of the trough. As a result, water is drawn into the drum and a thin mat of sludge is formed on the filter medium. As the filter rotates, the vacuum is continued, and further moisture reduction occurs. In addition, the deposited cake is further dried by air which rushes through the cake into the drum. Before the filter cake reaches the sludge vat again, it passes over a roller and is broken off onto a conveyor for ultimate disposal. The time the drum spends submerged in the slurry is called the "filter time"; the time the cake spends on the drum above the vat is called the "drying time."

b. Vacuum filtration facilities are generally sold as a package by various filter manufacturers. In addition to the filter itself, the package normally includes vacuum pumps, sludge feed pumps, filtrate pumps, sludge conditioning tanks, chemical feed pumps, and belt conveyors that transport dewatered filter cake. Filter medium made of cloth (cotton, wool, nylon, dacron, or other synthetic material), coil springs, or a wire-mesh stainless steel fabric are available in various weaves of different porosities.

c. Vacuum filter performance is measured by filtration rate and dryness of the filter cake. Several factors affecting the performance of a vacuum filter include:

(1) Vacuum -- As the vacuum increases, the filtration rate and the dryness of the cake also increase; this process is limited, obviously, by capacity of the drum. An ideal filter design would incorporate two independent vacuum systems: one operating while the cake is being formed, and the other after it comes out of submergence and is being dried. A vacuum of at least 20 in. of mercury is desirable.

(2). Feed Solid Concentration -- In general, the sludge filtration rates increase directly in proportion to the increase in feed sludge solids concentration; a smaller filtrate volume has to be removed per pound of filter cake formed. The practical limit for optimum operation for sewage sludges is 4-8 percent.

(3) Drum Speed and Submergence -- The drum speed influences the cycle time and consequently influences filter yield and filter cake moisture. A decrease in filter cycle time should increase the yield. However, lower filter cake moisture will be obtained by increasing the filter cycle, thereby extending the drying cycle. A submergence level of 20-40 percent has been used. It is usually more economical to run the filter at lower submergence since it will increase the ratio of dewatering time to cake formation time, and will still allow a short cycle for greater filtration rates.

(4) Chemical Conditioning of Sludge -- Chemical conditioning of sludge is usually a necessary step prior to sludge vacuum filtration. Chemical conditioning agglomerates solids and causes a release of water, thereby making the sludge easier to filter. A wide variety of chemicals have been evaluated for conditioning sludges prior to vacuum filtration. In general, lime and ferric chloride are the most commonly used conditioners. Recently, some organic polyelectrolytes have become popular as sludge conditioners. The amount and type of conditioning chemicals required depend on the physical and chemical characteristics of the sludge. Tables 5-19 and 5-20 summarize chemical doses reported from the operating records of various treatment facilities (para 5-83b).

d. Vacuum filter systems are designed from data describing quantities of sludge to be filtered, sludge characteristics, filtration rates, cake moisture, and filter operation cycles. The data could be generated from laboratory or pilot investigations of the sludge. The Buchner funnel test and the filter leaf test are commonly used in laboratory testing programs for estimating the filterability of sludges. The Buchner funnel test evaluates the optimum chemical requirements and sludge filtration characteristics measured in terms of specific resistance. The filter leaf test determines the effect of different fabrics, fabric forms, and drying times on filter yield. Table 5-21 summarizes specific resistance; Table 5-22 presents filter yields recommended for various sewage sludges.

e. Filter yield, or production rate, is the basic factor used in determining the size of vacuum filter installations. A conservative design rate of 3.5 $lb/ft^2/hr$ has been widely used. However, assuming the yield to be equal to the solids concentration of the sludge to be filtered is more accurate. Generally, the yield may vary from 2 to 10 $lb/ft^2/hr$. The low values represent filtration of fresh and digested activated sludge; the high values are typical for raw primary or primary plus trickling filter humus sludge filtration.

f. The bibliography (para 5-83) contains thorough discussions of the theory and application of vacuum filtration and example problems.

g. Vacuum filtration is being widely used for dewatering sewage sludges in small treatment facilities because of its flexibility, small space requirement, and the excellent characteristics of the cake. Thus, vacuum filtration is a viable alternative for sludge dewatering in treatment facilities serving recreation areas.

5-77. Input Data.

a. Volume of sludge to be dewatered, gpd.

b. Initial moisture content of sludge, percent.

5-78. Design Parameters.

a. Final moisture content of sludge, percent.

b. Specific resistance, sec^2/g (Buchner funnel test).

c. Applied vacuum, psi.

d. Fraction of cycle time for cake formation (formation time/cycle time), depends on degree of submergence.

e. Cycle time, min (usually 1.5 to 5 min).

f. Filtrate viscosity, centipoises.

g. Chemical dose, percent of dry weight in solids fed to filter.

h. Operation per week, days.

i. Operation per day, hr.

j. Loading rate, $lb/ft^2/hr$.

k. Number of units.

5-79. Design Procedure.

a. Calculate filter loading rate.

$$LR = 35.7 \left(\frac{XCP}{\mu Rt}\right)^{1/2}$$

$$R = r(10^{-7}) = sec^2/g$$

$$C = \frac{1}{\frac{C_i}{100 - C_i} - \frac{C_f}{100 - C_f}}$$

where

LR = filter loading rate, $lb/ft^2/hr$

X = form time/cycle time (0.1 to 0.6)

C = weight of dry solids in cake, g/mℓ

P = applied vacuum, psi (5 to 15 psi)

μ = filtrate viscosity, centipoises

r = specific resistance (Buchner funnel test or Table 5-21), sec^2/g

t = cycle time (1.5 to 5 min), time of revolution of drum

C_i = initial moisture content of sludge, percent

C_f = final moisture content of sludge, percent

b. If data are not available, select loading rate from Table 5-22 or use 3.5 $lb/ft^2/hr$.

c. Calculate required total filter area.

$$TFA = \frac{V(100 - C_i)(8.34)(7)24}{LR(100)(HPD)(DPW)}$$

where

TFA = total filter area, ft^2

V = sludge volume, gal/day

C_i = initial moisture content of sludge, percent

LR = filter loading rate, $lb/ft^2/hr$

HPD = operation per day, hr

DPW = days/week

d. Calculate amount of chemicals required.

$$CR = \frac{C_d V}{(HPD)(DPW)(100)} (7)(8.34) \frac{(100 - C_i)}{100}$$

where

CR = amount of chemicals required, lb/hr

C_d = chemical dosage, percent of dry weight of solids fed to filter

V = sludge volume, gal/day

HPD = operation per day, hr

DPW = days/week

C_i = initial moisture content of sludge, percent

e. Select number of filters and calculate area per filter.

$$APF = \frac{TFA}{NF}$$

where

APF = area per filter, ft^2

TFA = total filter area, ft^2

NF = number of filters

5-80. Output Data.

a. Loading rate, $lb/ft^2/hr$.

b. Total filter area, ft^2.

c. Chemical requirements, lb/hr.

d. Initial moisture content, percent.

e. Final moisture content, percent.

f. Cycle time, min.

g. Formation time, min.

h. Chemical dose, percent.

i. Applied vacuum, psi.

j. Operation per day, hr.

k. Operation per week, days.

5-81. Example Calculations.

a. Calculate filter loading rate.

$$LR = 35.7 \left(\frac{XCP}{\mu Rt}\right)^{1/2}$$

$$R = r(10^{-7}) = sec^2/gm$$

$$C = \frac{1}{\frac{C_i}{100 - C_i} - \frac{C_f}{100 - C_f}}$$

where

LR = filter loading rate, $lb/ft^2/hr$

X = form time/cycle time, 0.5

C = weight of dry solids in cake, g/mℓ

P = applied vacuum, 10 psi

μ = filtrate viscosity, 1.12 centipoises

R = specific resistance

t = cycle time, 3 min

r = specific resistance, 3.0×10^7 sec^2/g

C_i = initial moisture content, 97.5 percent

C_f = final moisture content, 75.0 percent

$$R = 3.0 \times 10^7 \ (10^{-7})$$

$$\underline{R = 3.0 \ sec^2/g}$$

$$C = \frac{1}{\frac{97.5}{100 - 97.5} - \frac{75.0}{100 - 75.0}}$$

$$\underline{C = 0.028 \ g/m\ell}$$

$$LR = 35.7 \left[\frac{0.5(0.028)10}{1.12(3.0)3.0}\right]^{1/2}$$

$$\underline{LR = 4.2 \ lb/ft^2/hr}$$

b. Use LR = 4.2 $lb/ft^2/hr$.

c. Calculate required total filter area.

$$TFA = \frac{V(100 - C_i)8.34(7)24}{LR(100)HPD(DPW)}$$

where

TFA = total filter area, ft^2

V = sludge volume, 7000 gpd

C_i = initial moisture content, 97.5 percent

LR = loading rate, 4.2 $lb/ft^2/hr$

HPD = hours of operation per day, 16

DPW = days of operation per week, 5

7 = days/week

24 = hr/day

$$TFA = \frac{7000(100 - 97.5)8.34(7)24}{4.2(100)16(5)}$$

$$\underline{TFA = 730\ ft^2}$$

d. Calculate amount of chemicals required.

$$CR = \frac{C_d V24}{HPD(DPW)100}\ 7(8.34)\ \frac{100 - C_i}{100}$$

where

CR = chemical requirement, lb/hr

C_d = chemical dosage, 1 percent

V = sludge volume, 7000 gpd

HPD = hours of operation per day, 16

DPW = days of operation per week, 5

C_i = initial moisture, content, 97.5 percent

$$CR = \frac{1(7000)(7)}{16(5)100} 8.34 \quad \frac{100 - 97.5}{100}$$

$$\underline{CR = 1.28 \text{ lb/hr}}$$

e. Select number of filters and calculate area per filter.

$$APF = \frac{TFA}{NF}$$

where

APF = area per filter, ft^2

TFA = total filter area, 730 ft^2

NF = number of filters, 2

$$APF = \frac{730}{2}$$

$$\underline{APF = 365 \text{ ft}^2}$$

5-82. Cost Data. Appropriate cost data and economic evaluation may be found in Chapter 8.

5-83. Bibliography.

a. American Society of Civil Engineers and the Water Pollution Control Federation, "Sewage Treatment Plant Design," Manual of Practice No. 8, 1959, 1961, 1967, 1968, Water Pollution Control Federation, Washington, D. C.

b. Burd, R. S., "A Study of Sludge Handling and Disposal," Publication WP-20-4, May 1968, Federal Water Pollution Control Administration, Washington, D. C.

c. Eckenfelder, W. W., Jr., Water Quality Engineering for Practicing Engineers, Barnes and Nobel, New York, 1970.

d. Eckenfelder, W. W., Jr., and Ford, D. L., Water Pollution Control, Pemberton Press, New York, 1970.

e. Jones, B. R. S., "Vacuum Sludge Filtration, II, Prediction of Filter Performance," Sewage and Industrial Wastes, Vol 28, No. 9, Sep 1956, pp 1103-1115.

f. Malina, J. F., "Sludge Filtration and Sludge Conditioning," Advances in Water Quality Improvements, University of Texas, Water Resources Symposium No. 3, 1970, Austin, Tex.

g. Metcalf and Eddy, Inc., Wastewater Engineering; Collection, Treatment, and Disposal, McGraw-Hill, New York, 1972.

h. Roy F. Weston, Inc., "Process Design Manual for Upgrading Existing Wastewater Treatment Plants," prepared for the U. S. Environmental Protection Agency, Technology Transfer, Oct 1971, Washington, D. C.

i. Simpson, G. D., "Operation of Vacuum Filters," Journal, Water Pollution Control Federation, Vol 36, Dec 1964, pp 1460-1467.

j. U. S. Environmental Protection Agency, Technology Transfer Seminars, "Sludge Handling and Disposal," 11-12 Dec 1973, Washington, D. C.

Table 5-19. Average Chemical Doses for Vacuum Filtration

Type of Sludge	Chemical Dose Rate, percent		Yield	Cake Moisture
	Ferric Chloride	Lime	$lb/ft^2/hr$	percent
Raw primary	2.1	8.8	6.9	69.0
Digested primary	3.8	12.1	7.2	73.0
Elutriated digested primary	3.4	0.0	7.5	69.0
Raw primary plus filter humus	2.6	11.0	7.1	75.0
Raw primary plus activated	2.6	10.1	4.5	77.5
Raw activated	7.5	0.0	0.0	84.0
Digested primary plus filter humus	5.3	15.0	4.6	77.5
Digested primary plus activated	5.6	18.6	4.0	78.5
Elutriated digested primary plus activated:				
Average without lime	8.4	0.0	3.8	79.0
Average with lime	2.5	6.2	3.8	76.2

From Burd, 1968

Table 5-20. Polyelectrolyte Doses (Usual Ranges) for Vacuum Filtration

Type of Sludge	Dose Rate percent	Yield $lb/ft^2/hr$	Cake Moisture percent
Raw primary or raw primary plus filter humus	0.2 to 1.2	6 to 20	63 to 72
Digested primary	0.2 to 1.5	4 to 15	66 to 74
Digested primary plus activated	0.5 to 2.0	4 to 8	68 to 76

From Burd, 1968

Table 5-21. Specific Resistance of Some Industrial and Municipal Sludges

Type of Sludge	Specific Resistance $sec^2/g \times 10^7$ at 500 g/cm^2	Coefficient of Compressibility
Neutralization of sulfuric acid with lime slurry	1 to 2	
Neutralization of sulfuric acid with dolomitic lime slurry	3	0.77
Processing of aluminum	3	0.44
Paper industry	6	0.0
Neutralization of fatty acids with sodium carbonate	7	0.0
Froth flotation of coal	80	1.6
Malt whisky distillery	200	1.3
Mixed chrome and vegetable tannery	300	0.0
Biological treatment of chemical wastes	300	0.0
Activated (domestic)	2880	0.81
Raw conditioned (domestic)	3.1	1.00
Digested conditioned (domestic)	10.5	0.0
Digested and activated (conditioned)	14.6	1.10
Raw (domestic)	470	0.54

From Eckenfelder, 1970

Table 5-22. Expected Performance of Vacuum Filters Handling Properly Conditioned Sludge

Type of Sludge	Yield, $lb/ft^2/hr$
Fresh solids	
Primary	4 to 12
Primary plus trickling filter	4 to 8
Primary plus activated	4 to 5
Activated (alone)	2.5 to 3.5
Digested solids (with or without elutriation)	
Primary	4 to 8
Primary plus trickling filter	4 to 5
Primary plus activated	4 to 5

From Simpson, 1964

Section XII. CENTRIFUGATION

5-84. Background.

a. Centrifugation is a widely used process for concentrating and dewatering sludge for final disposal. The process offers the following advantages (para 5-91c):

(1) Capital cost is low in comparison with other mechanical equipment.

(2) Operating costs are moderate, provided flocculants are not required.

(3) The unit is totally inclosed, thus odors are minimized.

(4) The unit is simple and will fit in a small place.

(5) Chemical conditioning of the sludge is often not required.

(6) The unit is flexible and can process a wide variety of solids.

(7) Minimum supervision is required.

b. Disadvantages associated with centrifugation are:

(1) Without the use of chemicals, solids capture is often poor.

(2) Chemical costs can be substantial.

(3) Trash must often be removed from the centrifuge feed by screening.

(4) The percentage of cake solids is often lower than that resulting from vacuum filtration.

(5) Maintenance costs are higher than vacuum filtration.

(6) Fine solids (in concentrate) that escape the centrifuge may resist settling when recycled to the head of the treatment plant and gradually build up in concentration, eventually raising effluent solids level.

c. Centrifuges applicable to sludge thickening and dewatering

fall into three general classifications: disc, basket, and the currently popular solid-bowl. Basically, centrifuges separate solids from liquids through sedimentation and centrifugal force. Process variables in centrifugation include feed rates, sludge solids characteristics, feed consistency, and chemical additives. Machine variables include bowl design, bowl speed, pool volume, and conveyor speed.

d. The main objectives in centrifuge design are cake dryness and solids recovery. The effect of the various parameters on these two factors are summarized in Table 5-23. Operating data reported in the literature indicate that raw primary and digested primary sludges dewater easily. With polymer addition, a centrifuge (fig. 5-13) can produce 25-40 percent cake solids with better than 90 percent recovery.

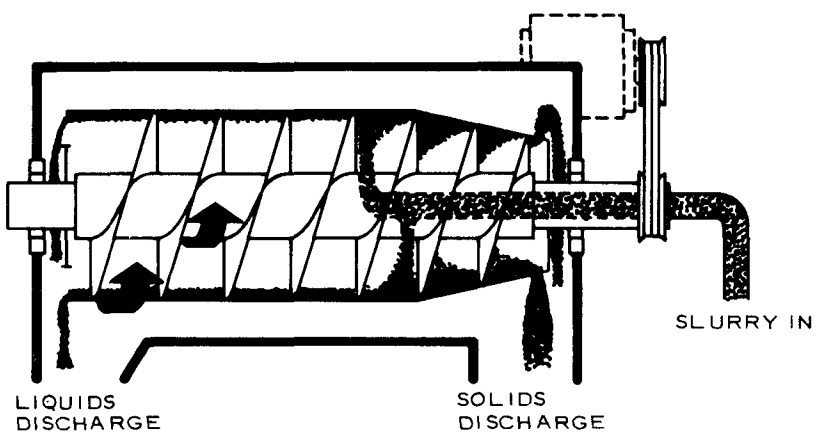

Figure 5-13. Schematic of a centrifuge.

Waste activated sludge, however, is difficult to thicken or dewater with centrifugation. High polymer dosages will be required to produce 8-10 percent cake solids and 90 percent recovery.

e. Design criteria for centrifugation systems are scarce. One criterion used in determining the size of centrifuge required is the power requirement per gallon per minute of inflow (0.5-2.0 hp per gpm). Generally, a power requirement of 1.0 hp/gpm of inflow is applicable to most centrifuges commercially manufactured.

5-85. Input Data.

a. Sludge flow, gpd.

b. Sludge concentration, percent solids.

5-86. Design Parameters.

a. Centrifuges power requirement, hp/gpm (≈1.0).

b. Operation per day, hr.

c. Operation per week, days.

d. Number of units.

e. Excess capacity factor, 1.25.

f. Chemical dosage, percent of dry weight of solids.

5-87. Design Procedure.

a. Calculate total power required.

$$THP = \frac{(SF)(CPR)(7\ DPW)(ECF)(24\ HPD)}{(24\ HPD \times 60\ MPH)(DPW)(HPD)}$$

where

THP = total power required, hp

SF = sludge flow, gpd

CPR = centrifuge power requirement, hp/gpm (≈1.0)

DPW = operation per week, days

ECF = excess capacity factor, 1.25

HPD = operation per day, hr

MPH = minutes per hour

b. Calculate power per unit. Use duplicate units.

$$\text{hp/unit} = \frac{\text{THP}}{\text{NU}}$$

where

THP = total power required, hp

NU = number of units

c. Compare horsepower with manufacturer's specification and select centrifuge that meets the requirements.

d. Calculate chemical requirements.

$$\text{CR} = \frac{(\text{SF})(7\ \text{DPW})(\text{C}_d)(8.34\ \text{lb/gal})}{(\text{HPD})(\text{DPW})(100)} \left(\frac{100 - \text{C}_i}{100}\right)$$

where

CR = chemical requirements, lb/hr

SF = sludge flow, gpd

C_d = chemical dosage, percent of dry weight of solids fed to filter

HPD = operation per day, hr

DPW = operation per week, days

C_i = initial moisture content of sludge, percent

5-88. Output Data.

a. Power required/unit.

b. Number of units.

c. Chemical requirements, lb/hr.

d. Sludge flow, gal/day.

e. Initial solid concentrate, percent.

f. Operation per day, hr.

g. Operation per week, days.

5-89. Example Calculations.

a. Calculate total power required.

$$THP = \frac{SF(CPR)7(ECF)24}{24(60)DPW(HPD)}$$

where

THP = total power required, hp

SF = sludge flow, 7000 gpd

CPR = centrifuge power requirement, 1.0 hp/gpm

ECF = excess capacity factor, 1.25

DPW = days of operation per week, 5

HPD = hours of operation per day, 16

$$THP = \frac{7000(7)24(1.25)1.0}{24(60)5(16)}$$

$$\underline{THP = 12.8 \text{ hp}}$$

b. Calculate power per unit.

$$hp/unit = \frac{THP}{NU}$$

where

hp/unit = power per unit, hp

THP = total power required, 12.8 hp

NU = number of units, 2

$$\text{hp/unit} = \frac{12.8}{2}$$

$$\underline{\text{hp/unit} = 6.4 \text{ hp}}$$

c. Compare horsepower with manufacturer's specification and select centrifuge that meets the requirements.

d. Calculate chemical requirements.

$$CR = \frac{SF(7)(C_d)8.34}{HPD(DPW)100}\left(\frac{100 - C_i}{100}\right)$$

where

CR = chemical requirements, lb/hr

SF = sludge flow, 7000 gpd

C_d = chemical dose, 1 percent

HPD = hours of operation per day, 16

DPW = days of operation per week, 5

C_i = initial moisture content of sludge, 97.5 percent

$$CR = \frac{7000(7)(1)8.34}{16(5)100}\left(\frac{100 - 97.5}{100}\right)$$

$$\underline{CR = 1.28 \text{ lb/hr}}$$

5-90. Cost Data. Appropriate cost data and economic evaluation may be found in Chapter 8.

5-91. Bibliography.

a. Albertson, O. E. and Guidi, E. E., Jr., "Centrifugation of Waste Sludges," Journal, Water Pollution Control Federation, Vol 41, Apr 1969, pp 607-628.

b. Bernard, J., "Sludge Centrifugation," 1st Seminar on Process Design for Water Quality Control, 1970, Vanderbilt University, Nashville, Tenn.

c. Burd, R. S., "A Study of Sludge Handling and Disposal," Publication WP-20-4, May 1968, Federal Water Pollution Control Administration, Washington, D. C.

d. Jenks, J. H., "Continuous Centrifuge Used to Dewater Variety of Sludges," Waste Engineering, Jul 1958, pp 360-361.

e. Roy F. Weston, Inc., "Process Design Manual for Upgrading Existing Wastewater Treatment Plants," prepared for the U. S. Environmental Protection Agency, Technology Transfer, Oct 1971, Washington, D. C.

f. U. S. Environmental Protection Agency, Technology Transfer Seminars, "Sludge Handling and Disposal," 11-12 Dec 1973, Washington, D. C.

g. White, W. F. and Burns, T. E., "Contiguous Centrifugal Treatment of Sewage Sludge," Water and Sewage Works, Vol 109, Oct 1962, pp 384-386.

Table 5-23. Summary of the Effect of Various Parameters on Centrifuge Performance

To Increase Cake Dryness	To Increase Solids Recovery
Increase bowl speed	Increase bowl speed
Decrease pool volume	Increase pool volume
Decrease conveyor speed	Decrease conveyor speed
Increase feed rate	Decrease feed rate
Decrease feed consistency	Increase temperature
Increase temperature	Use flocculants
Do not use flocculants	Increase feed consistency

From Burd, 1968

Section XIII. MICROSCREENING

5-92. Background.

a. Microscreening is a method of filtration which uses fabric as the filtering medium. Microscreens usually consist of a special metallic fabric mounted on the periphery of a revolving drum. The untreated water flows into the drum and radiates outward through the microfabric, leaving behind the suspended solids removed by the cloth. The solids retained on the inside of the rotating screen are carried upward to a row of backwash jets which flush them into a hopper, which is mounted on a hollow axle of the drum, for return to the treatment plant.

b. Microscreens have been used as a tertiary treatment process for filtering effluents from biological waste treatment systems. In a study at Lebanon, Ohio (para 5-99a), suspended solids removals of 89 and 73 percent were obtained with 23- and 35-micron fabrics, respectively. Backwash water averaged 5 percent of the throughput volume. Studies at Chicago Sanitary District (para 5-99j) reported an effluent suspended solids of 6-8 mg/ℓ and a BOD of 3.5-5 mg/ℓ when applying a good quality (suspended solids = 20-25 mg/ℓ and BOD 15-20 mg/ℓ) activated sludge effluent to a 23-micron screen. Microscreens were reported to be ineffective in the filtration of alum flocs. Removal efficiencies as recommended for secondary effluents are presented in Table 5-24 (para 5-99d).

c. Operating problems that have been reported for microscreens include slime growths, grease accumulation, and the possible buildup of iron and manganese on the screen. Ultraviolet lights placed in proximity to the screen have been somewhat successful in controlling slime growths. In general, however, units must be taken out of service on a regular basis for screen cleaning. Chlorine solutions, acid solutions, and hot water have been used as cleaners.

d. Currently, there is little information available on the design of microscreening devices. Individual manufacturers have specific designs and sizes for various types of installations, and much of this design information is proprietary in nature. Design elements required for microscreening include hydraulic loading, solids inputs, solids character, microscreen fabric, backwash, and head loss.

e. The rate of flow through the screen is limited by the allowable head loss and the character and concentration of the suspended solids in the feed. Typical loading rates of 2.5-10 gpm/ft^2 of submerged drum surface area have been reported. Studies at Chicago reported an upper

limit on hydraulic loading of 6.5 gpm/ft^2. The solid loading was the limiting design factor with an upper limit of 0.88 lb/ft^2/day. Head loss across the microscreening unit, including inlet and outlet structures, is limited to 12-18 in. for normal flows and to 6 in. for peak flows.

f. The continuous backwashing jets require 3-5 percent of the total throughput volume. In a recent study (para 5-99i) the cleaning efficiency depended on the fabric nominal size, screen speed, and backwash pressure. Cleaning efficiency was found to increase with increasing fabric nominal pore size to a maximum level of 0.90-0.95 at a pore size of 16.5 microns and then to decrease slightly with increasing fabric pore size. Screen speeds of 14.0-25.8 ft^2/min were found to provide a cleaning efficiency of 0.85. Cleaning efficiency was independent of pressure in the range of 15-35 psig and of speed in the range of 14.0-25.8 ft^2/min. The authors concluded that at no time should a microscreen unit be specified for specific application in the absence of pilot scale microscreen performance data developed with the water under consideration. Tables 5-25 and 5-26 summarize the microscreen sizes available from two manufacturers. A schematic of a microstrainer appears in Figure 5-14.

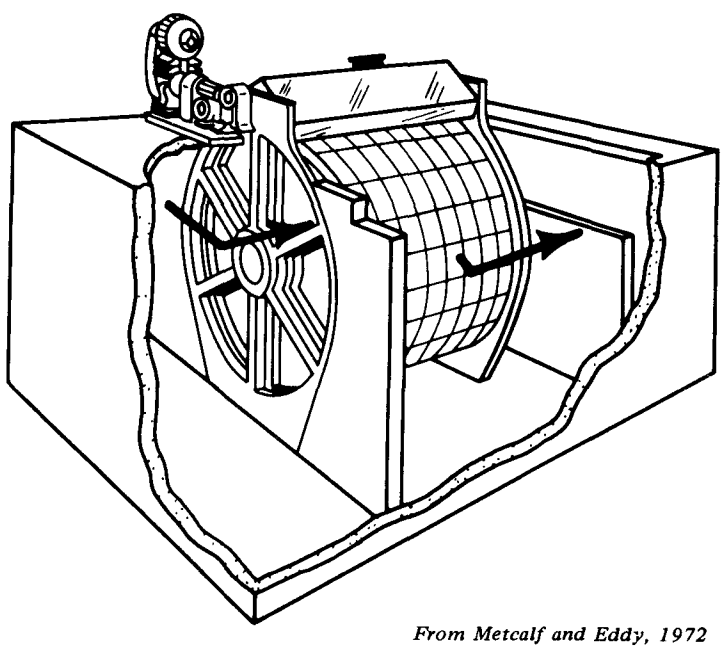

From Metcalf and Eddy, 1972

Figure 5-14. Schematic of a microstrainer.

5-93. Input Data.

a. Wastewater flow.

(1) Average flow, mgd.

(2) Peak flow, mgd.

b. Suspended solids concentration, mg/ℓ.

c. Effluent requirements, mg/ℓ.

5-94. Design Parameters.

a. Head loss across microscreen, in., ≈6 in. water.

b. Initial resistance of clean filter fabric, in feet, at a given temperature and standard flow conditions (manufacturer's requirements).

c. Filterability index of influent measured on fabric in use (volume of water obtained per unit head loss when passed at a standard rate through a unit area of standard filter). (From laboratory.)

d. Speed of strainer (number of square feet of effective fabric entering water in given time), ft^2/min (14.0-25.8 ft^2/min).

e. Constants: m = 0.0267; n = 0.1337

5-95. Design Procedure. Utilize the Boucher concept of filterability index (para 5-99b).

a. Calculate the effective submerged area of the screen.

$$A = \frac{mQC_f e^{nIQ\times 10^6/24(60)S} \times 10^6}{H(24)60}$$

where

A = effective submerged area, ft^2

$m = 0.0267$

Q = total rate of flow through unit, mgd.

C_f = initial resistance of clean filter fabric, feet, at a given temperature and standard flow conditions (manufacturer's requirements) (1.8 ft for 23-micron screen; 1.0 ft for 35-micron screen)

$n = 0.1337$

I = filterability index of influent measured on fabric in use (laboratory) $\approx 0.5(SS)_{eff}$

S = speed of strainer, ft^2/min

H = head loss across microscreen, in., ≈ 6 in.

b. Calculate hydraulic rate of application.

$$HR = \frac{(Q)(10^6)}{(A)(24)(60)}$$

where

HR = hydraulic rate, gpm/ft^2

Q = total rate of flow through unit, mgd

A = effective submerged area, ft^2

c. Calculate solids rate of application.

$$SR = \frac{(Q)(C_i)(8.34)}{A}$$

where

SR = solids loading rate, $lb/ft^2/day$

Q = total rate of flow through unit, mgd

C_i = influent SS, mg/ℓ

A = effective submerged area, ft^2

d. Calculate amount of backwash water.

$$BW = (3\text{-}6 \text{ percent})(Q)(10^6)$$

where

BW = backwash rate, gpd

Q = total rate of flow through unit, mgd

5-96. Output Data.

a. Effective submerged area, ft^2.

b. Hydraulic rate of application, gpm/ft^2.

c. Solids rate of application, $lb/ft^2/day$.

5-97. Example Calculations.

a. Calculate effective submerged area of screen.

$$A = \frac{mQC_f e^{nIQ \times 10^6/24(60)S} \times 10^6}{H(24)60}$$

where

A = effective submerged area, ft^2

m = constant, 0.0267

Q = flow, 1 mgd

C_f = initial resistance, 1.8 ft (23-micron fabric)

n = 0.1337

I = filterability index, 0.5

S = speed of strainer, 20 ft^2/min

H = head loss across microscreen, 6 in.

$$A = \frac{0.0267(1)1.8e^{0.1337(0.5)1\times10^6/24(60)20} \times 10^6}{6(24)60}$$

$$\underline{A = 56.7\ ft^2}$$

b. Calculate hydraulic rate of application.

$$HR = \frac{Q(10^6)}{A(24)60}$$

where

HR = hydraulic rate, gpm/ft^2

Q = flow, 1 mgd

A = effective submerged area, 56.7 ft^2

$$HR = \frac{1 \times 10^6}{56.7(24)60}$$

$$\underline{HR = 12.25\ gpm/ft^2}$$

Note: HR exceeds recommended limit of 6.5 gpm/ft^2; therefore, recalculate area using HR = 6.5 gpm/ft^2.

$$A = \frac{Q \times 10^6}{HR(24)60}$$

$$A = \frac{1 \times 10^6}{6.5(24)60}$$

$$\underline{A = 106.8\ ft^2}$$

c. Calculate solids rate of application.

$$SR = \frac{Q(C_i)8.34}{A}$$

where

SR = solids rate of application, $lb/ft^2/day$

Q = flow, 1 mgd

C_i = influent suspended solids, 20 mg/ℓ

A = area submerged, 106.8 ft^2

$$SR = \frac{1(20)8.34}{106.8}$$

$$\underline{SR = 1.56\ lb/ft^2/day}$$

Note: SR exceeds recommended limit of 0.88 $lb/ft^2/day$; therefore, recalculate area using SR = 0.88 $lb/ft^2/day$.

$$A = \frac{Q(C_i)8.34}{SR}$$

$$A = \frac{1(20)8.34}{0.88}$$

$$\underline{A = 189.5\ ft^2}$$

d. Calculate amount of backwash water.

$$BW = \frac{\%(Q)10^6}{100}$$

where

BW = backwash rate, gpd

% = percent, 4

Q = flow, 1 mgd

$$BW = \frac{4(1)10^6}{100}$$

$$\underline{BW = 40{,}000\ gpd}$$

5-98. Cost Data. Appropriate cost data and economic evaluation may be found in Chapter 8.

5-99. Bibliography.

a. Bordien D. G. and Stenburg, R. L., "Microscreening Effectively Polishes Activated Sludge Effluent," Water and Wastes Engineering, Vol 3, Sep 1966, pp 74-77.

b. Boucher, P. L., "A New Measure of the Filtrability of Fluids with Application to Water Engineering," ICE Journal (British), Vol 27, No. 4, 1947, pp 415-446.

c. Burns and Roe, Inc., "Process Design Manual for Suspended Solids Removal," prepared for the U. S. Environmental Protection Agency, Technology Transfer, Oct 1971, Washington, D. C.

d. Culp, R. L. and Culp, G. L., Advanced Wastewater Treatment, Van Nostrand, New York, 1971.

e. Engineering-Science, Inc., "State of the Art of the Microscreen Process," prepared for the Federal Water Quality Administration, Contract No. 14-12-819, Jul 1970, Washington, D. C.

f. Engineering-Science, Inc., "Theoretical Formulation of Operational Model for Simulation of Microscreen Behavior, Report No. B-1, Sep 1970, Federal Water Quality Administration, Washington, D. C.

g. Engineering-Science, Inc., "Current State of Operational Model for Simulation of Microscreen Behavior," prepared for the Federal Water Quality Administration, Contract No. 14-12-819, Nov 1970, Washington, D. C.

h. Engineering-Science, Inc., "Development of Field Data Acquisition Program for Pilot-Scale Microscreens," prepared for the Federal Water Quality Administration, Contract No. 14-12-819, Jan 1971, Washington, D. C.

i. Engineering-Science, Inc., "Investigation of Response Surfaces of the Microscreen Process," Report No. 17090EEM, Dec 1971, U. S. Environmental Protection Agency, Washington, D. C.

j. Lyman, B., Ettelt, G., and McAloon, T., "Tertiary Treatment at Metro Chicago by Means of Rapid Sand Filtration and Microstrainers," Journal, Water Pollution Control Federation, Vol 41, Feb 1969, pp 247-279.

k. Metcalf and Eddy, Inc., Wastewater Engineering; Collection, Treatment, and Disposal, McGraw-Hill, New York, 1972.

l. Mixon, F. O., "Filterability Index and Microscreener Design," Journal, Water Pollution Control Federation, Vol 42, No. 11, Nov 1970, pp 1944-1950.

Table 5-24. Suggested Removals from Secondary Effluents by Microscreens

Fabric Aperture microns	Anticipated Removal, % Suspended Solids	Anticipated Removal, % BOD	Flow, gpm/ft^2 of Submerged Area
23	70 to 80	60 to 70	6.7
35	50 to 60	40 to 50	10.0

From Culp and Culp, 1971

Table 5-25. Microscreen Sizes Available from Glenfield and Kennedy

Drum Sizes, ft Diameter	Drum Sizes, ft Width	Motors, bhp Drive	Motors, bhp Wash Pump	Approximate Ranges of Capacity, mgd	Recommended Maximum Flow for Tertiary Sewage Applications, mgd 23 microns	Recommended Maximum Flow for Tertiary Sewage Applications, mgd 35 microns
5	1	1/2	1	0.05 to 0.5	0.075	0.11
5	3	3/4	3	0.3 to 1.5	0.20	0.30
7-1/2	5	2	5	0.8 to 4	0.70	1.00
10	10	4	7-1/2	3 to 10	2.00	3.00

From Culp and Culp, 1971

Table 5-26. Microscreen-Sizes (Zurn Industries)

Drum Sizes, ft Diameter	Drum Sizes, ft Width	Screen Area ft^2
4	2	24
4	4	48
6	4	72
6	6	108
6	8	144
10	10	315

From Culp and Culp, 1971

Section XIV. DRYING BEDS

5-100. Background.

a. Sludge drying beds (fig. 5-15) are a common means of dewatering digested sludges, particularly for small plants. Drying beds normally consist of 4-9 in. of sand over 8-18 in. of graded gravel or stone. The beds are provided with underdrains spaced 9-20 ft apart. Underdrain piping is often vitrified clay with open joints, having a minimum diameter of 4 in. and a minimum slope of about 1 percent. Wet sludge is usually applied to the drying beds in layers of 8-12 in.

b. Design and use of drying beds for sludge dewatering are affected by weather conditions, sludge characteristics, land value, proximity of residences, use of sludge conditioning aids, and subsoil permeability. Sludge bed loadings can be computed on a per capita basis. Table 5-27 summarizes typical loading rates for various sludges. Drying beds may be open to the atmosphere or covered with glass or clear plastic.

c. Due to potential odor problems, sludge drying beds should be covered. Bed inclosures protect the beds from rain, help control odors and insects, reduce the drying period, reduce land requirements, and improve the appearance of the waste treatment facility.

5-101. Input Data.

a. Sludge flow, gpd.

b. Solids in thickened sludge, percent.

c. Solids desired, percent.

5-102. Design Parameters.

a. Depth of sludge applied (8-12 in.).

b. Days (T) in which drainage is the primary drying mechanism (1-8 days).

c. Solids after T days (15-25%).

d. Clearwater evaporation rate (available from the U. S. Weather Bureau).

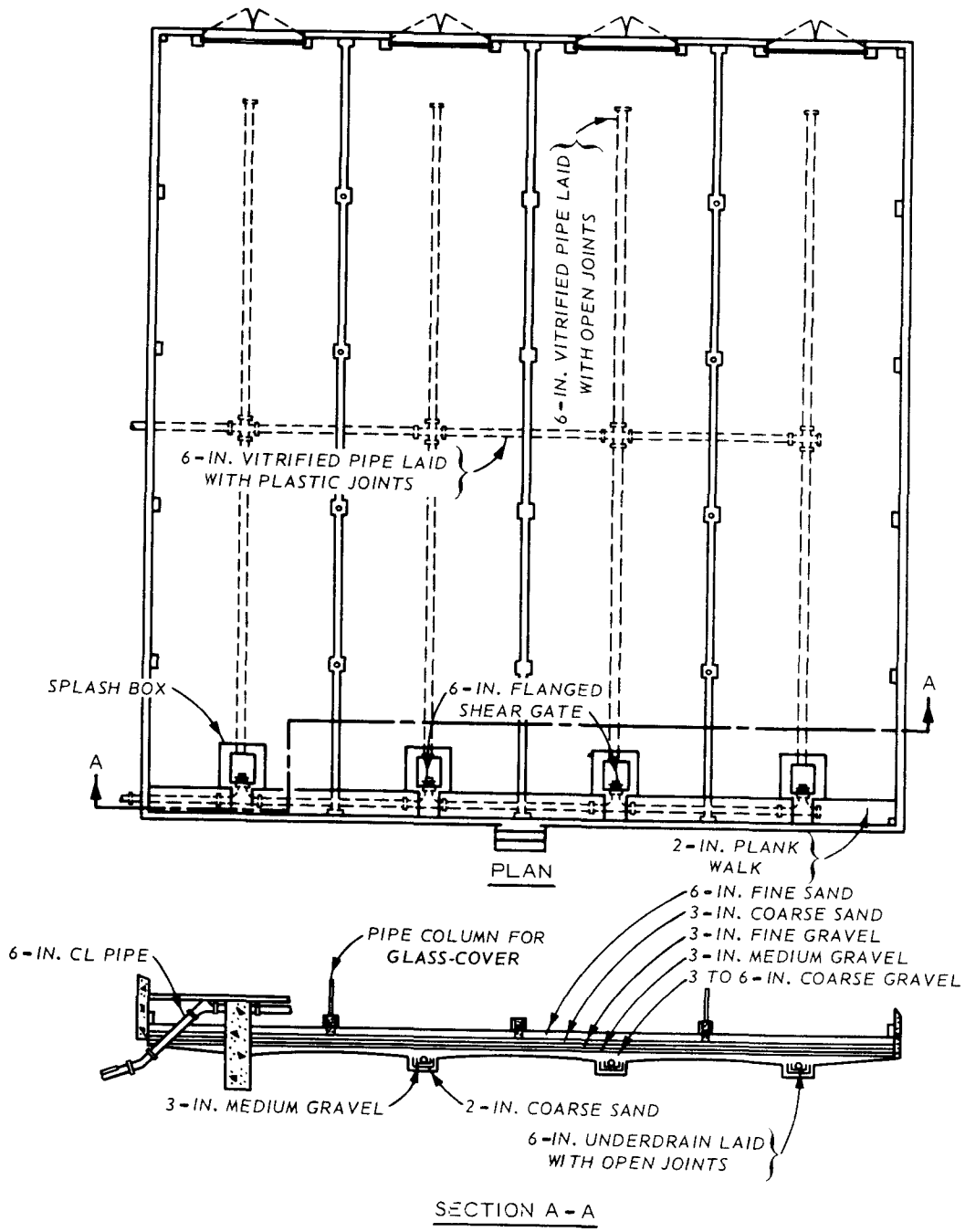

Figure 5-15. Schematic of a typical sludge drying bed.

e. Correction of evaporation rate for sludge ($\simeq$0.75).

f. Average rainfall in wet month (available from the U. S. Weather Bureau).

g. Fraction of rainfall absorbed by the sludge ($\simeq$0.57).

h. Number of sections desired.

5-103. Design Procedure. Fill several columns with thickened/digested sludge to desired application depth. The bottom of the column should contain sand and gravel in similar depths to that expected in the bed. Check the bed daily until drainage from the bottom has essentially ceased. Record the number of days of drainage (t_d) and the percent solids in the sludge(s).

a. Calculate the required drying time.

$$T = \frac{30 \times H \times S_o}{aE - bR}\left(\frac{1}{S_1} - \frac{1}{S_2}\right) + t_d$$

where

T = total drying time, days

H = depth to which sludge is applied, in.

S_o = initial solids, percent

a = correction of evaporation rate for sludge, $\simeq$0.75

E = clearwater evaporation rate, in./month

b = fraction of water absorbed by sludge, $\simeq$0.57

R = rainfall during wet month, in./month

S_1 = solids content after t_d days, percent

S_2 = final solids content, percent

t_d = time during which drainage is significant, days

b. Calculate the surface area.

$$SA = \frac{Q_s \times T(12)}{H(7.48)}$$

where

SA = surface area required, ft^2

Q_s = volumetric sludge flow, gpd

The drying bed is divided into several sections which are filled in turn so that one is always available to accept additional sludge.

$$SA = SA\left(\frac{N}{N - 1}\right)$$

where

N = number of sections

The area of each section can be given by

$$AS = \frac{SA}{N}$$

where

AS = the area of each section, ft^2

c. Calculate the solids produced.

$$DTPY = Q_s S_o \left(\frac{8.34 \text{ lb/gal}}{100}\right)(365 \text{ days/yr})\left(\frac{\text{ton}}{2000 \text{ lb}}\right)$$

where

DTPY = tons of dry solids per year

d. Calculate weight of solids removed.

$$TPY = \frac{DTPY}{S_2}$$

where

TPY = total tons per year removed.

5-104. Output Data.

a. Area required, ft^2

b. Depth of sludge application, in.

c. Number of sections.

d. Area of each section, ft^2

e. Drying time in bed, days

5-105. Example Calculations.

a. Calculate the required drying time.

$$T = \frac{30(H)S_o}{aE - bR}\left(\frac{1}{S_1} - \frac{1}{S_2}\right) + t_d$$

where

T = total drying time, days

H = depth of sludge applied, 12 in.

S_o = initial solids content, 2.5 percent

a = correction for evaporation, 0.75

E = clearwater evaporation rate, 4 in./month

b = fraction of rainfall absorbed, 0.57

R = rainfall of wet month, 2 in./month

S_1 = solids content after t_d days, 20.0 percent

S_2 = final solids content, 30 percent

t_d = time in which drainage is significant, 6 days

$$T = \frac{30(12)2.5}{0.75(4) - 0.57(2)}\left(\frac{1}{20} - \frac{1}{30}\right) + 6$$

$$\underline{T = 14 \text{ days}}$$

b. Calculate the surface area.

$$SA = \frac{(Q_s)T(12)}{H(7.48)}$$

where

SA = surface area, ft^2

Q_s = sludge flow, 7000 gpd

H = depth of sludge applied, 12 in.

T = drying time, 14 days

$$SA = \frac{(7000)14(12)}{12(7.48)}$$

$$\underline{SA = 13{,}102 \text{ ft}^2}$$

c. Calculate the solids produced.

$$DTPY = \frac{Q_s S_o (8.34)(365)}{(100)2000}$$

where

DTPY = tons of dry solids, tons/year

Q_s = sludge flow, 7,000 gpd

S_o = initial solids content, 2.5 percent

8.34 = conversion factor, lb to gal

365 = days per year

2000 = lb/ton

$$DTPY = \frac{7000(2.5)8.34(365)}{(100)2000}$$

$$\underline{DTPY = 266 \text{ tons/year}}$$

d. Calculate the weight of solids removed.

$$TPY = \frac{DTPY}{S_2}$$

where

TPY = tons per year removed

DTPY = tons of dry solids per year, 266

S_2 = final solids content, 0.30

$$TPY = \frac{260}{0.30}$$

$$\underline{TPY = 867 \text{ tons/year}}$$

5-106. Cost Data. Appropriate cost data and economic evaluation may be found in Chapter 8.

5-107. Bibliography.

a. American Society of Civil Engineers and the Water Pollution Control Federation, "Sewage Treatment Plant Design," Manual of Practice No. 8, 1959, 1961, 1967, 1968, Water Pollution Control Federation, Washington, D. C.

b. Bowers, M., "Tips on Sludge Drying Beds Care," Sewage and Industrial Waters, Vol 29, No. 7, Jul 1957, pp 835-836.

c. Burd, R. S., "A Study of Sludge Handling and Disposal," Publication WP-20-4, May 1968, Federal Water Pollution Control Administration, Washington, D. C.

d. Eckenfelder, W. W., Jr., Water Quality Engineering for Practicing Engineers, Barnes and Nobel, New York, 1970.

e. Metcalf and Eddy, Inc., Wastewater Engineering; Collection, Treatment, and Disposal, McGraw-Hill, New York, 1972.

f. Smith, R., "Preliminary Design of Wastewater Treatment Systems," Journal, Sanitary Engineering Division, American Society of Civil Engineers, Vol 95 SA1, 1969, pp 117-118.

g. Vesilind, P. A., Treatment of Wastewater Sludges, Ann Arbor Science Publishers, Inc., 1975.

h. Walski, T. M., "Mathematical Model Simplifies Design of Sludge Drying Beds," Water and Sewage Works, Vol 123, No. 4, April 1976, pp 64-65.

Table 5-27

Area Required for Sludge Drying Beds in the Northern United States

Type of Sludge	Open Beds ft^2/capita	Covered Beds ft^2/capita
Primary digested	1.0 to 1.5	0.75 to 1.0
Primary and humus digested	1.25 to 1.75	1.0 to 1.25
Primary and activated digested	1.75 to 2.5	1.25 to 1.5
Primary and chemically precipitated digested	2.0 to 2.5	1.25 to 1.5

(next page is 5-159)

Section XV. POSTAERATION

5-108. Background. Postaeration is increasingly required by many state pollution control agencies for the purpose of maintaining certain dissolved oxygen concentrations in wastewater treatment plant effluents. Postaeration can be accomplished either in a separate aeration tank equipped with a diffused or mechanical aeration system or by cascade aeration.

5-109. Mechanical or Diffused Aeration.

a. Design of Aeration Tank.

(1) Input data.

(a) Average wastewater flow.

(b) Peak wastewater flow.

(2) Design parameter. Detention time (5-10 min).

(3) Design procedure. Calculate the volume of the aeration tank.

$$V = \left[\frac{Q_p(t)}{60(24)}\right]$$

where

V = volume of aeration tank, million gal

Q_p = peak daily flow, mgd

t = detention time, min (5-10 min)

b. Design of Diffused Aeration System.

(1) Design parameters.

(a) Standard transfer efficiency, percent, from manufacturer (5-8 percent).

(b) O_2 transfer in waste/O_2 transfer in water, 0.9.

(c) O_2 saturation in waste/O_2 saturation in water, 0.9.

(d) Correction factor for pressure, 1.0.

(2) Select summer operating temperature (25°-30°C) and determine (from standard tables) O_2 saturation.

(3) Adjust standard transfer efficiency to operating conditions:

$$OTE = STE \frac{(C_s)_T(\beta)(p) - C_L}{9.17} \alpha(1.02)^{T-20}$$

where

OTE = operating transfer efficiency, percent

STE = standard transfer efficiency, percent

$(C_s)_T$ = saturation at selected summer temperature T, °C, mg/ℓ

β = O_2 saturation in waste/O_2 saturation in water, ≈0.9

p = correction factor for pressure, ≈1.0

C_L = minimum dissolved oxygen to be maintained in the basin, 2.0 mg/ℓ

α = O_2 transfer in waste/O_2 transfer in water, 0.9

T = temperature, °C

(4) Calculate required air flow:

$$R_a = \frac{O_2(10^5)(7.48)}{(OTE)0.0176 \frac{lb\ O_2}{ft^3\ air} 1440 \frac{min}{day} V}$$

where

R_a = required air flow, 20 to 30 cfm/1000 ft^3

O_2 = oxygen required, lb/day

OTE = operating transfer efficiency, percent

V = volume of basin, gal

(5) Check horsepower for complete mixing against horsepower required for complete mixing $\geq$0.1 hp/1000 gal; select the larger horsepower.

c. Design of Mechanical Aeration System.

(1) Design parameters.

(a) Standard transfer efficiency, lb/hp-hr (0 dissolved oxygen, 20°C, and tap water).

(b) O_2 transfer in waste/O_2 transfer in water, 0.9.

(c) O_2 saturation in waste/O_2 saturation in water, 0.9.

(d) Correction factor for pressure, 1.0.

(2) Select summer operating temperature (5°-30°C), and determine (from standard tables) O_2 saturation.

(3) Adjust standard transfer efficiency to operating conditions.

$$OTE = STE \frac{(C_s)_T(\beta)(p) - C_L}{9.17} \alpha(1.02)^{T-20}$$

where

OTE = operating transfer efficiency, lb O_2/hp-hr

STE = standard transfer efficiency, lb O_2/hp-hr

$(C_s)_T$ = O_2 saturation at selected summer temperature T, °C, mg/ℓ

β = O_2 saturation in waste/O_2 saturation in water, 0.9

p = correction factor for pressure, 1.0

C_L = minimum dissolved oxygen to be maintained in the basin, 2.0 mg/ℓ

α = O_2 transfer in waste/O_2 transfer in water, 0.9

T = temperature, °C

(4) Calculate horsepower requirement.

$$hp = \frac{O_2}{OTE \frac{lb\ O_2}{hp\text{-}hr} (24)(V)} \times 1000$$

where

hp = horsepower, per 1000 gal

O_2 = oxygen required, lb/day

OTE = operating transfer efficiency

V = volume of basin, gal

(5) Check horsepower for complete mixing against horsepower required for complete mixing $\geq$0.1 hp/1000 gal; select the larger horsepower.

d. Output Data.

(1) Diffused aeration system.

(a) Standard transfer efficiency, percent.

(b) Operating transfer efficiency, percent.

(c) Required air flow, cfm/1000 ft^3.

(2) Mechanical aeration system.

(a) Standard transfer efficiency, lb O_2/hp-hr.

(b) Operating transfer efficiency, lb O_2/hp-hr.

(c) Horsepower required.

(3) Aeration equipment.

e. Example Calculations.

(1) Design of aeration tank.

$$V = \frac{Q_p(t)}{60(24)}$$

where

V = volume of aeration tank, million gal

Q_p = peak flow, 2 mgd

t = detention time, 5 min

$$V = \frac{2(5)}{60(24)}$$

$$\underline{V = 0.007 \text{ million gal} = 7000 \text{ gal}}$$

(2) Design of diffused aeration system.

(a) Adjust standard transfer efficiency to operating conditions.

$$OTE = STE \frac{(C_s)_T \beta(p) - C_L}{9.17} \alpha(1.02)^{T-20}$$

where

OTE = operating transfer efficiency, percent

STE = standard transfer efficiency, 8 percent

$(C_s)_T$ = saturation at temperature T, 8.2 mg/ℓ

β = 0.9

p = pressure correction factor, 1.0

α = 0.9

T = temperature, 25°C

C_L = minimum dissolved oxygen, 2 mg/ℓ

9.17 = saturation at 20°C

$$OTE = 8\left[\frac{8.2(0.9)(1.0) - 2}{9.17}\right]0.9(1.02)^{25-20}$$

$$\underline{OTE = 4.7\%}$$

(b) Calculate required air flow.

$$R_a = \frac{O_2(10^5)7.48}{(OTE)0.0176\ \frac{lb\ O_2}{ft^3\ air}\ 1440\ \frac{min}{day}\ V}$$

where

R_a = required air flow for mixing, 25 cfm/1000 ft^3

O_2 = oxygen required, lb/day

OTE = operating transfer efficiency, 4.7 percent

V = volume of basin, 7000 gal

$$25 = \frac{O_2(10^5)7.48}{4.7(0.0176)1440(2000)}$$

$$\underline{O_2 \text{ required} = 2.79 \text{ lb/day}}$$

(c) Check horsepower for mixing.

$$hp = \frac{O_2}{OTE(24)V}$$

where

hp = horsepower required

O_2 = oxygen required, 27.9 lb/day

OTE = operating transfer efficiency, 4.7 percent

V = volume of tank, 2000 gal

$$hp = \frac{27.9}{4.7(24)7000}$$

$$\underline{hp = 0.035\ hp/1000\ gal}$$

Therefore, use hp required for mixing.

$$\underline{hp = 0.1\ hp/1000\ gal}$$

(3) Design mechanical aeration system.

(a) OTE is same as for diffused aeration system = 4.7%

(b) hp for oxygen requirements = 0.035 hp/1000 gal

(c) Use hp = 0.1 hp/1000 gal

5-110. Cascade Aeration. Cascade aeration takes advantage of the principle that reaeration occurs when water flows over a dam or a weir and turbulent flow takes place. Oxygen is transferred from the atmosphere. Head requirement depends upon the initial dissolved oxygen and the desired dissolved oxygen.

a. Input Data.

(1) Water temperature, °C.

(2) Initial dissolved oxygen concentration, mg/ℓ.

b. Design Parameters.

(1) Desired oxygen concentration, mg/ℓ.

(2) constants n and m

(a) n = water quality parameter = 0.8 for wastewater treatment plant effluent

(b) m = weir geometry parameter

1.0 for a free weir

1.3 for step weirs

c. Design Procedures. Use equation developed by Barrett et al. (para 5-112a).

(1) Calculate oxygen saturation, C_s, at the selected design temperature.

$$C_s = (14.562 - 0.4102T + 0.007910T^2)$$

where

C_s = dissolved oxygen saturation at the selected temperature, mg/ℓ

T = temperature

(2) Calculate the deficit ratio, r.

$$r = \frac{C_s - C_a}{C_s - C_b}$$

where

r = deficit ratio

C_a = oxygen concentration above the weir, mg/ℓ

C_b = oxygen concentration below the weir, mg/ℓ

(3) Calculate the required head, h.

$$h = \frac{r - 1}{0.11\ n(m)(1 + 0.046T)}$$

where

h = required head, ft

n = water quality parameter

= 0.8 for wastewater treatment plant effluent

m = weir geometry parameter

= 1.0 for free weir

= 1.3 for step weirs

T = temperature

d. Output Data.

(1) Initial dissolved oxygen concentration, C_a , mg/ℓ.

(2) Final dissolved oxygen concentration, C_b , mg/ℓ.

(3) Design temperature, T , °C.

(4) Required head, h , ft.

e. Example Calculations.

(1) Calculate oxygen saturation, C_s .

$$C_s = (14.562 - 0.4102T + 0.00791T^2)$$

where

C_s = oxygen saturation, mg/ℓ

T = temperature, 25°C

$$C_s = [14.562 - 0.4102(25) + 0.00791(25)^2]$$

$$\underline{C_s = 9.25 \text{ mg/}\ell}$$

(2) Calculate deficit ratio.

$$r = \frac{C_s - C_a}{C_s - C_b}$$

where

r = deficit ratio

C_s = oxygen saturation, 9.25 mg/ℓ

C_a = oxygen concentration above weir, 2.0 mg/ℓ

C_b = oxygen concentration below weir, 5.0 mg/ℓ

$$r = \frac{9.25 - 2.0}{9.25 - 5.0}$$

$$\underline{r = 1.7}$$

(3) Calculate required head.

$$h = \frac{r - 1}{0.11n(m)(1 + 0.046T)}$$

where

h = required head, ft

r = deficit ratio, 1.7

n = water quality parameter, 0.8

m = weir geometry parameter, 1.3

T = temperature, 25°C

$$h = \frac{1.7 - 1}{0.11(0.8)1.3[1 + 0.046(25)]}$$

$$\underline{h = 2.85 \text{ ft}}$$

5-111. Cost Data. Appropriate cost data and economic evaluation may be found in Chapter 8.

5-112. Bibliography.

a. Barrett, M. J. et al., "Aeration Studies for Four Weir System," Water and Water Engineering, 64, No. 9, 1960, pp 407-413.

b. Roy F. Weston, Inc., "Upgrading Existing Wastewater Treatment Plant," Process Design Manual for Environmental Protection Agency, October 1971.

Section XVI. SLUDGE HAULING AND LANDFILLING

5-113. Background.

a. General. Landfilling can provide an acceptable and inexpensive method for ultimate sludge disposal, particularly for smaller facilities. The method may be of special importance if it can be integrated with solid waste disposal systems that have an operating sanitary landfill. Other methods of sludge treatment, such as drying beds or incineration, are considered to be methods of volume reduction that produce a residue requiring ultimate disposal.

b. Principles of Operation.

(1) Sludge hauling and landfilling may be approached in a manner similar to that for a typical solid waste disposal problem. Most solid waste disposal systems have at least four definable components: storage, collection, haul, and disposal. In addition, sludge disposal systems usually require some form of pretreatment if associated costs are to be minimized.

(2) Pretreatment of sludge is related to reducing the volume to a minimum before transporting. Typical unit processes used for volume reduction may include digestion, centrifugation, vacuum filtration, and sludge drying beds. Costs associated with these processes are not considered to be part of sludge hauling or landfilling but are very important in the overall sludge handling train.

(3) Storage costs are site-specific and depend largely upon the method selected in the sludge handling train. They may be simply the costs associated with the purchase of bins for storage of waste activated or primary sludge, a dump truck for storage of digested sludge solids that have been centrifuged or vacuum filtered, or the cost associated with sludge drying beds.

(4) Collection costs are dependent upon a time-labor relationship to transfer the sludge from storage to the transporting vehicle, as a dump or tank truck. There may not be a collection cost associated with labor; however, a cost would be incurred to provide a vehicle during the loading period. Larger facilities may require that a driver be assigned to the vehicle during loading periods. Collection costs may be significant when it is necessary to shovel sludge from drying beds into trucks for transportation to the landfill. As indicated in the above paragraphs collection costs are site and system specific.

(5) Transportation costs are associated with such parameters as truck cost, truck size, haul time, labor, and operating costs per unit time for items such as depreciation, fuel, insurance, maintenance, etc. Operating costs may be estimated from manufacturer's rating information and used in conjunction with estimates of sludge production from various wastewater treatment processes.

(6) Disposal costs are related to the operation and management of the final disposal facility. This cost should be minimal if the facility will integrate ultimate sludge disposal with the disposal of refuse. When this is possible, the disposal costs may only include the costs of unloading and a landfill fee. On the other hand, if the landfill is to receive only waste sludge; costs may be very significant as other equipment for operation of the landfill will be required. The equipment used for landfill operation may include units for excavation, placing, covering, and compaction of fill.

(7) The lowest possible moisture content attainable at a reasonable cost should be produced for economical sludge hauling and landfill operations. A reduction of moisture content will produce a savings in storage, initial equipment, operating, and labor costs.

5-114. Input Data.

a. Average wastewater flow, mgd.

b. Sludge volume, gal/million gal.

c. Raw sludge solids concentration, percent.

d. Dewatered sludge solids concentration, percent.

e. Vehicle loading time, hr.

f. Round-trip haul time, hr.

g. Vehicle capacity, yd^3.

h. Solids capture in dewatering process, percent.

i. Distance to disposal site, miles.

5-115. Design Parameters.

a. Sludge volume per million gallons treated (Table 5-28).

b. Raw sludge solids concentration (Table 5-28), 1.5-15 percent.

c. Concentrated solids (Table 5-28), 6-60 percent.

d. Vehicle capacity, yd^3/truck.

e. Truck loading time, 0.5-2.0 hr.

f. Haul time, local conditions.

g. Daily work schedule, 6-8 hr.

h. Solids capture (Table 5-29), 70-99 percent.

5-116. Design Procedure.

a. Compute the sludge volume hauled, yd^3/day.

$$SV = \frac{(Q_{avg})(SF)(SS)}{(7.48)(27)(CSS)}$$

where

SV = sludge volume hauled, yd^3/day

Q_{avg} = average wastewater flow, mgd

SF = sludge flow, gal/million gal (Table 5-28)

SS = suspended solids in sludge flow, percent (Table 5-28)

CSS = concentrated suspended solids from final treatment process, percent (Table 5-29)

b. Calculate the number of vehicles for collection and hauling of the sludge.

$$NTR = \frac{(SV)(LT + HT)}{(HPD)(CAP)}$$

where

NTR = number of trucks required

LT = loading time, hr (0.5-2.0 hr)

HT = round-trip haul time, hr (local conditions)

HPD = work schedule, hr/day (6-8 hr)

CAP = vehicle capacity, yd^3/truck (3-12 yd^3)

c. Compute the tons of sludge hauled per day.

$$TSH = \frac{(Q_{avg})(SF)(SS)(SCAP)(8.34)}{100(CSS)(2000)}$$

where

TSH = tons of sludge hauled per day

SCAP = solids capture, percent (Table 5-29)

5-117. Output Data.

a. Volume of sludge to be dewatered, gpd.

b. Initial moisture content, percent.

c. Final moisture content, percent.

d. Volume of sludge hauled, yd^3/day.

e. Truck capacity, yd^3.

f. Time to make one load, hr.

g. Work schedule, hr/day.

h. Number of trucks required.

i. Tons of sludge hauled per day.

j. Distance to disposal site, miles.

5-118. Example Calculations.

a. Compute the sludge volume hauled.

$$SV = \frac{(Q_{avg})(SF)(SS)}{7.48(27)CSS}$$

where

SV = sludge volume hauled, yd^3/day

Q_{avg} = average daily flow, 1.0 mgd

SF = sludge flow, 2700 gal/million gal

SS = suspended solids in sludge flow, 6 percent

CSS = concentrated suspended solids from final treatment process, 12 percent

$$SV = \frac{1.0(2700)6}{7.48(27)12}$$

$$\underline{SV = 6.7\ yd^3/day}$$

b. Calculate number of vehicles required.

$$NTR = \frac{(SV)(LT + HT)}{HPD(CAP)}$$

where

NTR = number of trucks required

SV = sludge volume hauled, 6.7 yd^3/day

LT = loading time, 1.5 hr

HT = round-trip haul time, 2.5 hr

HPD = work schedule, 8 hr

CAP = vehicle capacity, 4 yd^3/truck

$$NTR = \frac{6.7(1.5 + 2.5)}{8(4)}$$

$$\underline{NTR = 1 \text{ truck at } 2 \text{ trips/day}}$$

c. Compute tons of sludge hauled per day.

$$TSH = \frac{Q_{avg}(SF)SS(SCAP)(8.34)}{100(CSS)2000}$$

where

TSH = tons of sludge hauled per day

Q_{avg} = average flow, 1.0 mgd

SF = sludge flow, 2700 gal/million gal

SS = suspended solids in sludge flow, 6 percent

SCAP = solids capture, 95 percent

CSS = cake suspended solids, 12 percent

$$TSH = \frac{1.0(2700)6(95)8.34}{100(12)2000}$$

$$\underline{TSH = 5.3 \text{ tons/day}}$$

5-119. Cost Data. Appropriate cost data and economic evaluation may be found in Chapter 8.

5-120. Bibliography.

a. Clark, R. M. and Helms, B. P., "Fleet Selection for Solid Waste Collection Systems," Journal, Environmental Engineering Division, American Society of Civil Engineers, Vol 98, No. 71, 1972.

b. Clark, R. M. and Gillean, J. I., "Systems Analysis and Solid Waste Planning," Journal, Environmental Engineering Division, American Society of Civil Engineers, Vol 100, No. 7, 1974.

c. Guarino, C. F. et al., "Land and Sea Solids Management Alternatives in Philadelphia," Journal, Water Pollution Control Federation, Vol 47, No. 2551, 1975.

d. Metcalf and Eddy, Inc., Wastewater Engineering; Collection, Treatment, and Disposal, McGraw-Hill, New York, 1972.

e. Parkhurst, J. D. et al., "Dewatering Digested Primary Sludge," Journal, Water Pollution Control Federation, Vol 46, No. 468, 1974.

f. U. S. Environmental Protection Agency, Technology Transfer, Process Design Manual for Sludge Treatment and Disposal, October 1974.

Table 5-28. Normal Quantities of Sludge Produced by Different Treatment Processes

Wastewater Treatment Process	Gallons Sludge/ mg Treated	Solids percent	Sludge Specific Gravity
Primary sedimentation			
Undigested	2,950	5.0	1.02
Digested in separate tanks	1,450	6.0	1.03
Trickling filter	745	7.5	1.025
Chemical precipitation	5,120	7.5	1.03
Primary sedimentation and activated sludge			
Undigested	6,900	4.0	1.02
Digested in separate tanks	2,700	6.0	1.03
Activated sludge			
Waste sludge	19,400	1.5	1.005
Septic tanks, digested	900	10.0	1.04
Imhoff tanks, digested	500	15.0	1.04

Table 5-29. Process Efficiencies for Dewatering of Wastewater Sludge

Unit Process	Solids Capture, percent	Cake Solids, percent
Centrifugation		
Solid bowl	80-90	5-13
Disc-nozzle	80-97	5-7
Basket	70-90	9-10
Dissolved air flotation	95	4-6
Drying beds	85-99	8-25
Filter press	99	40-60
Gravity thickener	90-95	5-12
Vacuum filter	90+	28-35

From EPA Process Design Manual for Sludge Treatment and Disposal

Section XVII. MULTIPLE-HEARTH INCINERATION

5-121. Background. The multiple-hearth furnace is the most widely used wastewater sludge incinerator in use today because it is simple to operate, durable, and capable of burning a wide variety of materials. Reasonable fluctuations in the feed rate may be accommodated without interruption of the incineration process. Figure 5-16 represents a typical cross section of a multiple-hearth incinerator. Sludge from water or wastewater treatment is normally thickened and dewatered by vacuum filtration and/or centrifugation. The dewatered sludge enters the multiple-hearth furnace at the top and is held first on the top hearth. The sludge is stirred constantly to promote drying and burning by rabble arms. These slow-moving arms move the sludge across the hearths to the inner or outer edge where it drops to the hearth beneath. This process continues until the sludge reaches the bottom of the furnace as ash.

5-122. Input Data.

a. Average wastewater flow, mgd.

b. Sludge volume, gal/million gal.

c. Raw sludge concentration, percent solids.

d. Dewatered sludge concentration, percent solids.

e. Wet sludge loading rate, $lb/hr/ft^2$.

5-123. Design Parameters.

a. Sludge volume per million gal treated (Table 5-30).

b. Raw sludge concentration, percent solids (Table 5-30), 1.5-15 percent.

c. Dewatered sludge concentration, percent solids (Table 5-31), 4-60 percent.

d. Design multiple-hearth furnace wet sludge loading rate, 7-12 $lb/hr/ft^2$ at 20-25 percent total solids.

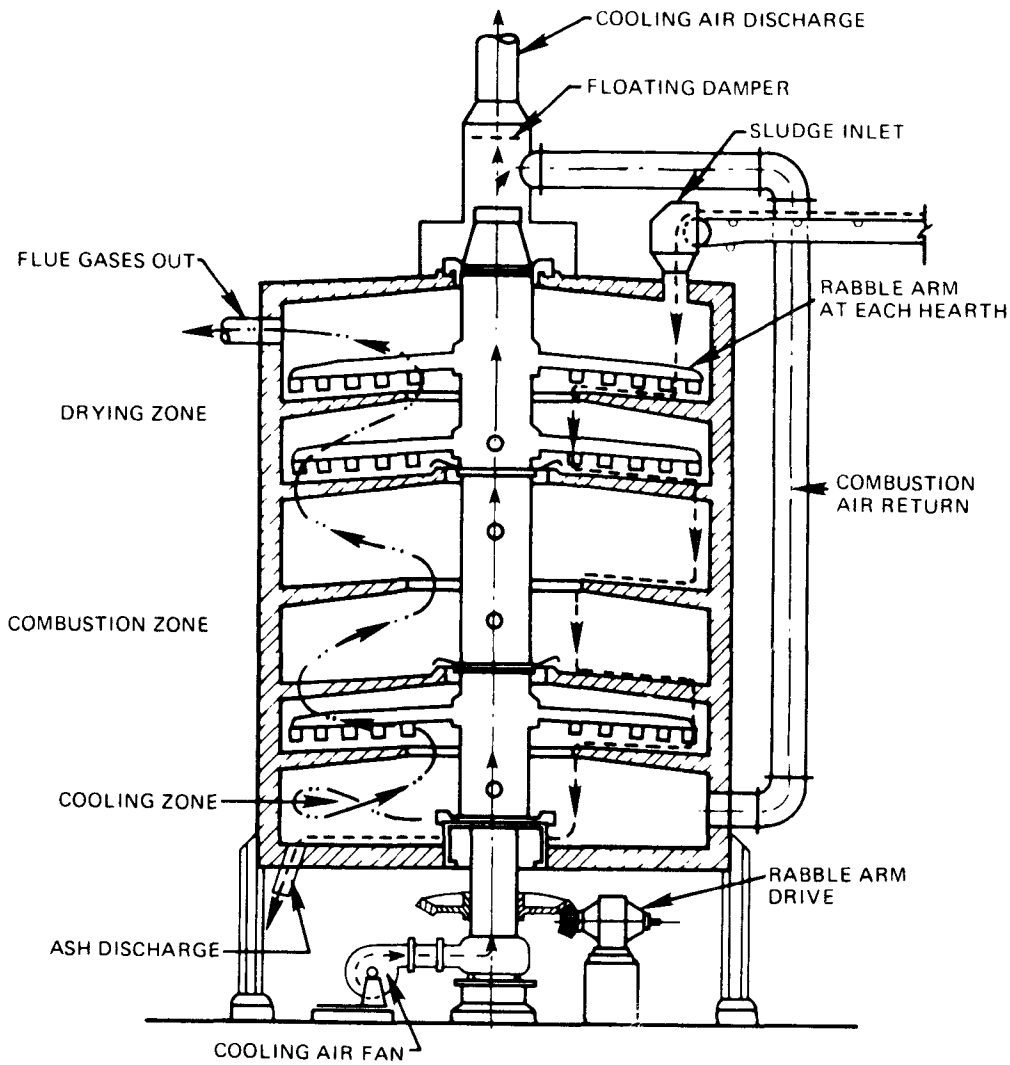

Figure 5-16. Typical multiple-hearth furnace.

5-124. Design Procedure.

a. Calculate the pounds of dry solids in sludge flow per day.

$$SP = \frac{(Q_{avg})(SF)(SS)(SCAP)(8.34)}{(100)(100)}$$

where

SP = dry solids produced per day, lb

Q_{avg} = average wastewater flow, mgd

SF = sludge flow, gal/million gal (Table 5-30)

SS = suspended solids flow to dewatering process, percent

SCAP = solids capture, percent (Table 5-31)

b. Calculate the dry solids loading rate.

$$LR = \frac{(WSLR)(PSTMHF)(24)}{100}$$

where

LR = dry solids loading rate, $lb/day/ft^2$

WSLR = wet sludge loading rate, $lb/hr/ft^2$

PSTMHF = percent solids in sludge to multiple-hearth furnace

c. Calculate total hearth area requirement.

$$SA = \frac{SP}{LR}$$

where SA = required total hearth area, ft^2

d. From Table 5-32, select the next larger standard size of multiple-hearth furnace and enter data for final design.

$$THA = xxxx.x\ ft^2$$

$$O.D. = xx.xx\ ft$$

$$No.\ of\ hearths = xx$$

$$No.\ of\ furnaces = x$$

where THA = total hearth area furnished

e. Calculate combustion air blower horsepower required.

$$CBHP = \frac{(0.15)(WSLR)(THA)24}{2000}$$

where

CBHP = combustion air blower horsepower required

0.15 = horsepower required per ton of wet sludge per day at 1-psig pressure

f. Calculate combustion air blower SCFM supplied.

$$CBSCFM = \frac{(22.5)(WSLR)(THA)24}{2000}$$

where

CBSCFM = combustion air blower SCFM supplied

22.5 = SCFM required per ton of wet sludge per day at 1-psig pressure

g. Calculate cooling air fan horsepower requirements.

$$CLHP = \frac{(0.08)(WSLR)(THA)24}{2000}$$

where

CLHP = cooling air fan horsepower required

0.08 = horsepower required per ton wet sludge per day at 8-in. water static pressure

h. Calculate cooling air fan SCFM supplied.

$$CLSCFM = \frac{(36.0)(WSLR)(THA)24}{2000}$$

where

CLSCFM = cooling air fan SCFM supplied

36.0 = SCFM required per wet ton sludge per day at 8-in. water static pressure

5-125. Output Data.

a. Raw sludge concentration, percent solids.

b. Dewatered sludge concentration, percent solids.

c. Dry solids produced per day, lb.

d. Dry solids loading rate, $lb/hr/ft^2$.

e. Required total hearth area, ft^2.

f. Total hearth area furnished, ft^2.

g. Outside diameter, ft.

h. Number of hearths.

i. Number of furnaces.

j. Combustion air blower horsepower required, hp.

k. Combustion air blower SCFM supplied, SCFM.

l. Cooling air fan horsepower required, hp.

m. Cooling air fan SCFM supplied, SCFM.

5-126. Example Calculations.

a. Calculate the pounds of dry solids produced per day.

$$SP = \frac{Q_{avg}(SF)SS(SCAP)8.34}{100(100)}$$

where

SP = dry solids produced per day, lb

Q_{avg} = average flow, 1.0 mgd

SF = sludge flow, 2700 gal/million gal

SS = suspended solids in sludge flow, 6 percent

SCAP = solids capture, 95 percent

$$SP = \frac{1.0(6)2700(95)8.34}{100(100)}$$

$$\underline{SP = 1284 \text{ lb/day}}$$

b. Calculate the dry solids loading rate.

$$LR = \frac{(WSLR)(PSTMHF)24}{100}$$

where

LR = dry solids loading rate, lb/day/ft^2

WSLR = wet solids loading rate, 8.5 lb/hr/ft^2

PSTMHF = percent solids to MHF, 12 percent

$$LR = \frac{8.5(12)24}{100}$$

$$\underline{LR = 24.5 \text{ lb/day/ft}^2}$$

c. Calculate total hearth area required.

$$SA = \frac{SP}{LR}$$

where

SA = required total hearth area, ft^2

SP = solids produced, 12.84 lb/day

LR = loading rate, 24.5 $lb/day/ft^2$

$$SA = \frac{12.84}{24.5}$$

$$\underline{SA = 52.4 \text{ ft}^2}$$

d. Select next larger size hearth.

Use

THA = 85 ft^2

O.D. = 6.75 ft

No. of hearths = 6

No. of furnaces = 1

e. Calculate combustion air horsepower required.

$$CBHP = \frac{0.15(WSLR)THA(24)}{2000}$$

where

CBHP = combustion horsepower

0.15 = horsepower required per ton of wet sludge

WSLR = wet sludge loading rate, 8.5 $lb/hr/ft^2$

THA = total hearth area, 85 ft^2

$$CBHP = \frac{0.15(8.5)85(24)}{2000}$$

$$\underline{CBHP = 1.3\ hp}$$

f. Calculate combustion air blower SCFM.

$$CBSCFM = \frac{22.5(WSLR)THA(24)}{2000}$$

where

CBSCFM = combustion SCFM

22.5 = required SCFM per ton of wet sludge

WSLR = wet sludge loading rate, 8.5 $lb/hr/ft^2$

THA = total hearth area, 85 ft^2

$$CBSCFM = \frac{22.5(8.5)85(24)}{2000}$$

$$\underline{CBSCFM = 195\ cfm}$$

g. Calculate cooling air fan horsepower requirements.

$$CLHP = \frac{0.08(WSLR)(THA)24}{2000}$$

where

CLHP = cooling horsepower

0.08 = horsepower required per ton of wet sludge

WSLR = wet sludge loading rate, 8.5 lb/hr/ft^2

THA = total hearth area, 85 ft^2

$$CLHP = \frac{0.08(8.5)85(24)}{2000}$$

$$\underline{CLHP = 0.7 \text{ hp}}$$

h. Calculate cooling air fan SCFM.

$$CLSCFM = \frac{36(WSLR)THA(24)}{2000}$$

where

CLSCFM = cooling SCFM

36 = SCFM required per ton of wet sludge

WSLR = wet sludge loading rate, 8.5 lb/hr/ft^2

THA = total hearth area, 85 ft^2

$$CLSCFM = \frac{36(8.5)85(24)}{2000}$$

$$\underline{CLSCFM = 312 \text{ cfm}}$$

5-127. Cost Data. Appropriate cost data and economic evaluation may be found in Chapter 8.

5-128. Bibliography.

a. Burgess, J. V., "Comparison of Sludge Incineration Processes," Process Biochemistry, Vol 3, April 1968, p 27.

b. Gray, D. H. and Penessis, C., "Engineering Properties of Sludge Ash," Journal, Water Pollution Control Federation, Vol 44, May 1972, p 847.

c. Helmenstein, S. and Martin, F., "Planning Criteria for Refuse Incineration Systems," Combustion, Vol 45, May 1974, p 11.

d. Loran, B. I., "Burn That Sludge," Water and Wastes Engineering, Vol 12, October 1975, p 65.

e. Unterberg, W., Sherwood, R. J., and Schnerder, G. R., "Computerized Design and Cost Estimation for Multiple Hearth Sludge Incinerators," Environmental Protection Agency Publication No. EP 1.16:17070 EBP 07/71, 1971.

Table 5-30. Normal Quantities of Sludge Produced by Different Treatment Processes

Wastewater Treatment Process	Gallons Sludge/ mg Treated	Solids percent	Sludge Specific Gravity
Primary sedimentation			
Undigested	2,950	5.0	1.02
Digested in separate tanks	1,450	6.0	1.03
Trickling filter	745	7.5	1.025
Chemical precipitation	5,120	7.5	1.03
Primary sedimentation and activated sludge			
Undigested	6,900	4.0	1.02
Digested in separate tanks	2,700	6.0	1.03
Activated sludge			
Waste sludge	19,400	1.5	1.005
Septic tanks, digested	900	10.0	1.04
Imhoff tanks, digested	500	15.0	1.04

Table 5-31. Process Efficiencies for Dewatering of Wastewater Sludge

Unit Process	Solids Capture, percent	Cake Solids, percent
Centrifugation		
Solid bowl	80-90	5-13
Disc-nozzle	80-97	5-7
Basket	70-90	9-10
Dissolved air flotation	95	4-6
Drying beds	85-99	8-25
Filter press	99	40-60
Gravity thickener	90-95	5-12
Vacuum filter	90+	28-35

From EPA Process Design Manual for Sludge Treatment and Disposal

Table 5-32. Standard Sizes of Multiple-Hearth Furnace Units

No. of Hearths	6 to 12
Wall Thickness, in.	13.5
Outer Diameter (O.D.), ft	6.75 to 22.25
Effective Hearth Area, ft^2	85 to 3120

THA ft^2	O.D. ft	No. Hearths
85	6.75	6
98	6.75	7
112	6.75	8
125	7.75	6
126	6.75	9
140	6.75	10
145	7.75	7
166	7.75	8
187	7.75	9
193	9.25	6
208	7.75	10
225	9.25	7
256	9.25	8
276	10.75	6
288	9.25	9
319	9.25	10
323	10.75	7
351	9.25	11
364	10.75	8
383	9.25	12
411	10.75	9
452	10.75	10
510	10.75	11
560	10.75	12
575	14.25	6
672	14.25	7
760	14.25	8
845	16.75	6
857	14.25	9
944	14.25	10
988	16.75	7
1041	14.25	11
1068	18.75	6
1117	16.75	8
1128	14.25	12
1249	18.75	7
1260	16.75	9
1268	20.25	6
1400	16.75	10
1410	18.75	8
1483	20.25	7
1540	16.75	11
1580	22.25	6
1591	18.75	9
1660	20.25	8
1675	16.75	12
1752	18.75	10
1849	22.25	7
1875	20.25	9
1933	18.75	11
2060	20.25	10
2084	22.25	8
2090	18.75	12
2275	20.25	11
2350	22.25	9
2464	20.25	12
2600	22.25	10
2860	22.25	11
3120	22.25	12

Section XVIII. FLUIDIZED BED INCINERATION

5-129. Background.

a. Fluidized bed incineration for wastewater sludges involves the destruction of wastewater solids through combustion. Basically, dewatered sludge is pumped into the incineration vessel containing a heated catalytic bed. This bed is fluidized by a controlled upward airflow at pressures of 2.0 to 5.0 psig; this air also supplies oxygen for combustion. Temperatures for combustion range from 1200° to 1600°F. Supplemental fuel may be added by burners to keep temperatures at optimum levels if the sludge characteristics do not allow for autogenous combustion. Burning of wastewater sludge produces ash and several gases which are carried upward by the flow of air through an exhaust stack. Figure 5-17 describes a typical material balance for incineration of 1 lb of dry sludge. Normally, some type of air pollution equipment such as scrubbers, electrostatic precipitators, and cyclones are connected to process the incinerator byproducts. This exhaust may also pass through other control devices if noxious odors are expected to result from combustion.

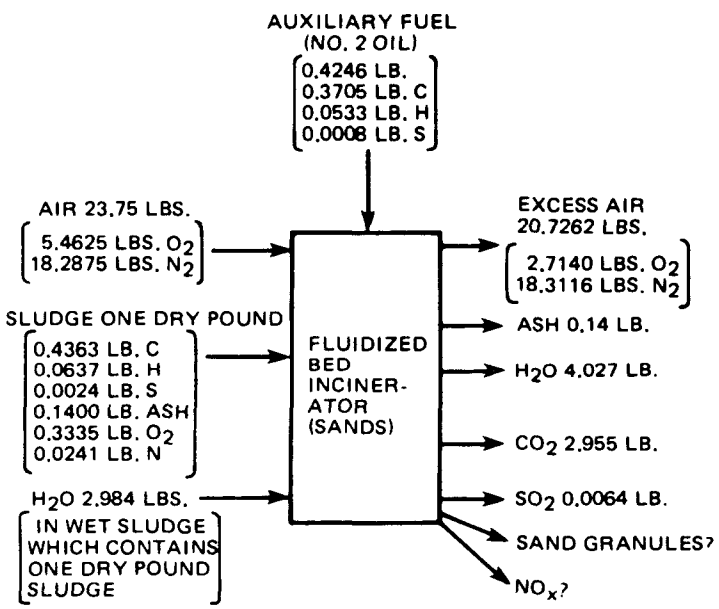

Figure 5-17. Material balance for fluidized bed sewage sludge incineration.

b. The fluidized bed incinerator used for combustion of wastewater sludge is a vertical cylinder with an air distributor plate containing small openings near the bottom as seen in Figure 5-18. The base plate serves two functions: (1) allows air to pass into the media and (2) supports the media. An external air source forces the air into the bottom of the vessel where it is distributed in such a manner as to fluidize the bed and supply oxygen for combustion.

c. The bed material is composed of graded silica sand with size varying from ASTM No. 8 to No. 20. The normal operating temperatures for these fluidized sand beds are between 1200° and 1600°F, the maximum being 2000°F. At this temperature, the sand approaches its melting point which is detrimental to the incinerator process. Also, damage to the incinerator vessel would be experienced in the heat exchanger and flue piping.

d. There are two possible locations for the sludge feed inlet to be placed on a fluidized bed incinerator vessel. One is positioned so that the sludge is pumped (screw-type) directly into the fluidized bed. The advantage of this configuration lies in the fact that complete combustion is realized in a short time. Yet, problems can be incurred due to clogging from dried sludge. The second location is above the fluidized bed or the freeboard zone. Hot gases evaporate the water in the sludge as the solids enter the vessel. This operation is more amenable to combustion of solids with high moisture contents. However, combustion time for the elevated configuration is increased.

e. Sludge combustion in an incinerator occurs in two zones: Zone 1 (bed) where the principal processes are pyrolysis and combustion and Zone 2 (freeboard) where the principal processes are flame holding and final burnup. Combustible elements contained in sludge are carbon, hydrogen, nitrogen, and sulfur, which when completely burned with oxygen, form the combustion products CO_2, H_2O, NO_x, and SO_2, respectively. Ash is also generated in the process of incinerating sludge. The NO_x, SO_2, and particulate ash can be classified as major air pollutants. In order to prevent the release of these by-products into the atmosphere, all fluidized bed incinerators are equipped with scrubbers of varying efficiency. These units have been found to be quite effective.

f. In some cases, an air preheater or heat exchanger can be used in conjunction with a fluidized bed as seen in Figure 5-18. The function of the preheater is to raise the temperature of the incoming air to 1000°F by mixing the cool air at 70°F with the exhaust gas at 1500°F.

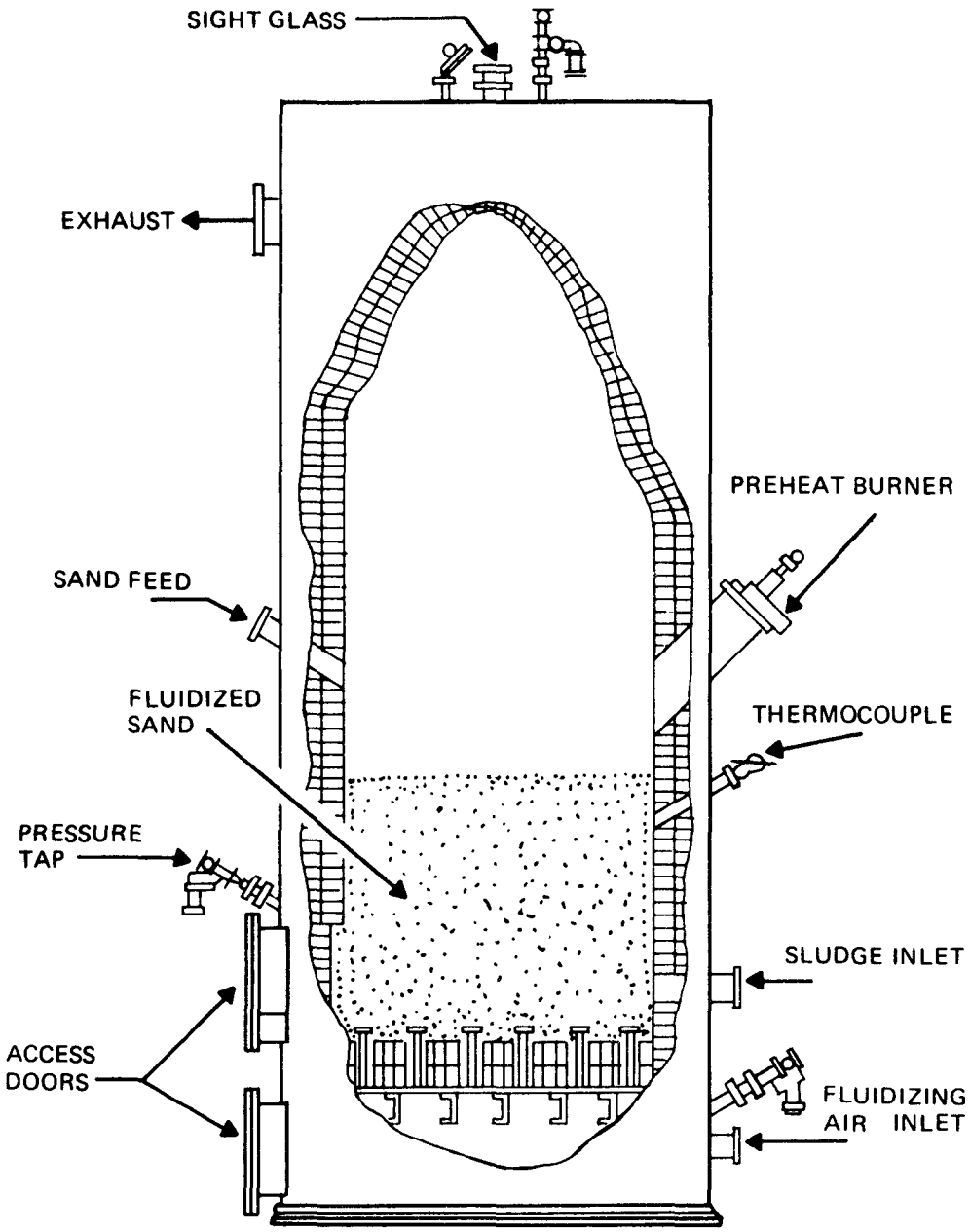

Figure 5-18. Cross section of a fluid bed reactor.

5-130. Input Data.

a. Average flow, Q_{avg}, mgd.

b. Sludge volume, gal/million gal (Table 5-33).

c. Sludge solids concentration, percent (Table 5-33).

d. Moisture content of dewatered sludge, percent (Table 5-34).

e. Work schedule, hr/day.

f. Sludge analysis.

(1) Carbon content, percent.

(2) Hydrogen content, percent.

(3) Oxygen content, percent.

(4) Sulfur content, percent.

g. Heat value of fuel.

h. Fuel analysis, for fuel oil.

(1) Carbon content, percent.

(2) Hydrogen content, percent.

(3) Oxygen content, percent.

(4) Sulfur content, percent.

i. Operating temperature of preheater, °F.

j. Ambient air temperature, °F.

k. Sand-to-sludge ratio.

l. Specific weight of sand, lb/ft^3.

m. Volatile solid content of sludge, percent.

n. Fuel cost, dollars per million Btu.

5-131. Design Parameters.

a. Sludge solids concentration, 1.5 to 5 percent.

b. Moisture content of dewatered sludge, 40 to 96 percent.

c. Sludge analysis. Use laboratory values if known; otherwise use the following.

(1) Carbon content, 43.6 percent.

(2) Hydrogen content, 6.4 percent.

(3) Oxygen content, 33.4 percent.

(4) Sulfur content, 0.3 percent.

d. Heat value of fuel oil, 18,000 Btu/lb.

e. Fuel analysis. Use reported values, or for fuel oil use the following.

(1) Carbon content, 87.3 percent.

(2) Hydrogen content, 12.6 percent.

(3) Oxygen content, 0 percent.

(4) Sulfur content, 1.0 percent.

f. Operating temperature of preheater, 1000° to 1200°F.

g. Incinerator retention time, 10 to 50 sec.

h. Ratio of incinerator height:diameter, 4:1 to 6:1.

i. Heat release rate, <50,000 Btu/hr/ft.

j. Sand-to-sludge ratio, 3 to 8 lb/lb/hr.

k. Specific weight of sand, 110 lb/ft^3.

l. Grid jet velocity, >300 fps.

m. Volatile solids content of sludge, percent. Use reported values, or 40 to 60 percent volatile.

n. Fuel cost, dollars per million Btu.

5-132. Design Procedure.

a. Determine the amount of sludge to be incinerated, lb/day.

$$SP = \frac{(Q_{avg})(SF)(SS)(SCAP)(8.34)}{(100)(100)}$$

where

SP = dry sludge produced per day, lb

Q_{avg} = average wastewater flow, mgd

SF = sludge flow, gal/million gal (Table 5-33)

SS = suspended solids in sludge, percent

SCAP = solids capture, percent (Table 5-34)

b. Calculate the sludge hourly loading rate.

$$LR = \frac{SP}{HPD}$$

where

LR = dry sludge loading rate, lb/hr

HPD = work schedule, hr/day

c. Calculate sludge heat value.

$$BS = 145C_1 + 620\left(H_1 - \frac{O_1}{7.94}\right) + 45S_1$$

where

BS = sludge heat value, Btu/lb

C_1 = carbon in sludge, percent (if unknown, use 43.6)

H_1 = hydrogen in sludge, percent (if unknown, use 6.4)

O_1 = oxygen in sludge, percent (if unknown, use 33.4)

S_1 = sulfur in sludge, percent (if unknown, use 0.3)

d. Calculate sludge loading rate.

$$SL = 10^{(2.7-0.0222M)}$$

where

SL = sludge loading rate, $lb/ft^2/hr$

M = moisture content of dewatered sludge, percent

e. Calculate cross-sectional area of incinerator.

$$A = \frac{LR}{SL}$$

where A = area of incinerator, ft^2

f. Calculate diameter of incinerator.

$$D = \left(\frac{4A}{\pi}\right)^{0.5}$$

where D = diameter, ft

g. Compute auxiliary fuel supply.

(1) Calculate burning rate.

$$BR = 10^{(5.947-0.0096M)}$$

where BR = burning rate, $Btu/ft^2/hr$

(2) Compute total heat input rate.

$$HIR = (BR)(A)$$

where HIR = total heat input rate, Btu/hr

(3) Calculate heat input from sludge.

$$HIS = (BS)(LR)$$

where HIS = heat input from sludge, Btu/hr

(4) Calculate auxiliary fuel supply.

$$AFS = HIR - HIS$$

where AFS = auxiliary fuel supply, Btu/hr

(5) Calculate fuel oil required.

$$FO = \frac{AFS}{HV}$$

where

FO = fuel oil required, lb/hr

HV = heat value of fuel

h. Compute air supply rate (20 percent excess air).

(1) Calculate air supply rate for sludge.

$$q_1 = 0.0127[(LR)(2.67C_1 + 7.94H_1 + S_1 - O_1)]$$

where q_1 = air supply rate for sludge, scfm

(2) Calculate air supply rate for fuel.

$$q_2 = 0.0127[(FO)(2.67C_2 + 7.94H_2 + S_2 - O_2)]$$

where

q_2 = air supply rate for fuel, scfm

C_2 = carbon in fuel, percent (if unknown, use 87.3)

H_2 = hydrogen in fuel, percent (if unknown, use 12.6)

S_2 = sulfur in fuel, percent (if unknown, use 1.0)

O_2 = oxygen in fuel, percent (if unknown, use 0.0)

(3) Calculate air supply rate.

$$q = q_1 + q_2$$

where q = total dry air supply, scfm

i. Calculate total gas flow (air plus water).

$$q_t = q + \frac{LR}{100 - M}\left(\frac{M}{3.01}\right)$$

where q_t = total gas flow, scfm

j. Calculate air preheater capacity.

(1) Calculate the air-to-sludge ratio.

$$ASR = \frac{4.50q}{LR}$$

where ASR = air-to-sludge ratio, lb air/lb sludge

(2) Calculate air preheater capacity.

$$APHS = (0.24)(ASR)(T_2 - T_1)(LR)$$

where

APHS = air preheater capacity, Btu/hr

T_2 = operating temperature, °F (1000° to 1200°F)

T_1 = incoming air temperature, °F

k. Assume a retention time for the incinerator. (See Table 5-35)

$$10 \leq dt \leq 50 \text{ sec}$$

where dt = retention time, sec

l. Determine volume of reactor.

$$V = q_t \frac{dt}{60}$$

where V = volume of reactor, ft^3

m. Calculate the height of the reactor. ($4 \leq H/D \leq 6$)

$$H = \frac{V}{A}$$

where H = height of reactor, ft. (If H/D does not fall between 4 and 6, adjust dt and make a new determination of the volume, V .)

n. Check heat release rate. (Hr $\leq$ 50,000 Btu/hr/ft)

$$Hr = \frac{HIR}{V}$$

where Hr = heat release rate, $Btu/hr/ft^3$

o. Assume a sand-to-sludge ratio (Table 5-35). Use 3 to 8 lb sand/lb sludge/hr for ASTM No. 8 sand.

$$3 < Rss < 8 \text{ lb/lb/hr}$$

where Rss = ratio of sand to sludge

p. Calculate the depth of ASTM No. 8 silica sand required.

$$L = \frac{(12)(LR)(Rss)}{(\gamma_s)(A)}$$

where

L = depth of sand, in.

γ_s = specific weight of sand, lb/cu ft (approx 110)

q. Calculate the grid jet velocity (Table 5-35; V > 300 fps).

$$V_j = 160 + 160 \log L$$

where V_j = grid jet velocity, fps

5-133. Output Data.

a. Dry sludge loading rate, lb/hr.

b. Sludge heat value, Btu/lb.

c. Sludge loading rate, $lb/ft^2/hr$.

d. Cross-sectional area of incinerator, ft^2.

e. Diameter of incinerator, ft.

f. Burning rate, $Btu/ft^2/hr$.

g. Total heat input rate, Btu/hr.

h. Heat input from sludge, Btu/hr.

i. Auxiliary fuel supply, Btu/hr.

j. Fuel oil required, lb/hr.

k. Total dry air supply, scfm.

l. Total gas flow, scfm.

m. Air preheater capacity, Btu/hr.

n. Volume of reactor, ft^3.

o. Height of reactor, ft.

p. Heat release rate, Btu/ft/hr.

q. Depth of sand, in.

r. Grid jet velocity, fps.

5-134. Example Calculations.

a. Determine the amount of sludge produced.

$$SP = \frac{Q_{avg}(SF)SS(SCAP)8.34}{100(100)}$$

where

SP = sludge produced, lb/day

Q_{avg} = average daily flow, 1.0 mgd

SF = sludge flow, 2700 gal/million gal

SS = suspended solids in sludge, 6 percent

SCAP = solids capture, 95 percent

$$SP = \frac{1.0(2700)6(95)8.34}{100(100)}$$

$$\underline{SP = 1284 \text{ lb/day}}$$

b. Calculate the sludge loading rate.

$$LR = \frac{SP}{HPD}$$

where

LR = loading rate, lb/hr

SP = sludge produced, 1284 lb/day

HPD = work schedule, 8 hr/day

$$LR = \frac{1284}{8}$$

$$\underline{LR = 160 \text{ lb/hr}}$$

c. Calculate sludge heat value.

$$BS = 145C_1 + 620\left(H_1 - \frac{O_1}{7.94}\right) + 45S_1$$

where

BS = sludge heat value, Btu/lb

C_1 = carbon in sludge, 43.6 percent

H_1 = hydrogen in sludge, 6.4 percent

O_1 = oxygen in sludge, 33.4 percent

S_1 = sulfur in sludge, 0.3 percent

$$BS = 145(43.6) + 620\left(6.4 - \frac{33.4}{7.94}\right) + 45(0.3)$$

$$\underline{BS = 7695 \text{ Btu/hr}}$$

d. Calculate the sludge loading rate.

$$SL = 10^{(2.7-0.022M)}$$

where

SL = sludge loading rate, $lb/ft^2/hr$

M = moisture content of dewatered sludge, 60 percent

$$SL = 10^{[2.7-0.022(60)]}$$

$$\underline{SL = 24 \text{ lb/ft}^2\text{/hr}}$$

e. Calculate cross-sectional area of incinerator.

$$A = \frac{LR}{SL}$$

where

A = area, ft^2

LR = loading rate, 160 lb/hr

SL = sludge loading rate, 24 $lb/ft^2/hr$

$$A = \frac{160}{24}$$

$$\underline{A = 6.7\ ft^2}$$

f. Calculate diameter of incinerator.

$$D = \sqrt{\frac{4A}{\pi}}$$

where

D = diameter, ft

A = area, 6.7 ft^2

$$D = \sqrt{\frac{4(6.7)}{\pi}}$$

$$\underline{D = 2.92\ ft}$$

g. Compute auxiliary fuel supply.

(1) Calculate burning rate.

$$BR = 10^{(5.947-0.0096M)}$$

where

BR = burning rate, $Btu/ft^2/hr$

M = moisture content of dewatered sludge, 60 percent

$$BR = 10^{[5.947-0.0096(60)]}$$

$$\underline{BR = 234{,}960\ Btu/ft^2/hr}$$

(2) Compute total heat input rate.

$$HIR = BR(A)$$

where

HIR = heat input rate, Btu/hr

A = area, 6.7 ft^2

BR = burning rate, 234,960 Btu/ft^2/hr

$$HIR = 234{,}960(6.7)$$

$$\underline{HIR = 1{,}574{,}250 \text{ Btu/hr}}$$

(3) Calculate heat input from sludge.

$$HIS = BS(LR)$$

where

HIS = heat input, from sludge, Btu/hr

BS = sludge heat value, 7695 Btu/lb

LR = loading rate, 160 lb/hr

$$HIS = 7695(160)$$

$$\underline{HIS = 1{,}231{,}200 \text{ Btu/hr}}$$

(4) Calculate auxiliary fuel supply.

$$AFS = HIR - HIS$$

where

AFS = auxiliary fuel supply, Btu/hr

HIR = heat input rate, 1,574,250 Btu/hr

HIS = heat input from sludge, 1,231,200 Btu/hr

$$AFS = 1{,}574{,}250 - 1{,}231{,}200$$

$$\underline{AFS = 343{,}050 \text{ Btu/hr}}$$

(5) Calculate fuel oil required.

$$FO = \frac{AFS}{HV}$$

where

FO = fuel oil required, lb/hr

AFS = auxiliary fuel supply, 343,050 Btu/hr

HV = heat value of fuel, 18,000 Btu/lb

$$FO = \frac{343{,}050}{18{,}000}$$

$$\underline{FO = 19 \text{ lb/hr}}$$

h. Compute air supply rate (20% excess).

(1) Calculate air supply rate for sludge.

$$q_1 = 0.0127[LR(2.67C_1 + 7.94H_1 + S_1 - O_1)]$$

where

q_1 = air supply for sludge, scfm

LR = loading rate, 160 lb/hr

C_1 = carbon in sludge, 43.6 percent

H_1 = hydrogen in sludge, 6.4 percent

S_1 = sulfur in sludge, 0.3 percent

O_1 = oxygen in sludge, 33.4 percent

$$q_1 = 0.0127\{160[(2.67)(43.6) + 7.94(6.4) + 0.3 - 33.4]\}$$

$$\underline{q_1 = 272.5 \text{ scfm}}$$

(2) Calculate air supply rate for fuel.

$$q_2 = 0.0127[FO(2.67C_2 + 7.94H_2 + S_2 - O_2)]$$

where

q_2 = air supply rate for fuel, scfm

FO = fuel oil required, 19 lb/hr

C_2 = carbon in fuel, 87.3 percent

H_2 = hydrogen in fuel, 12.6 percent

S_2 = sulfur in fuel, 1.0 percent

O_2 = oxygen in fuel, 0 percent

$$q_2 = 0.0127[19(2.67)(87.3) + 7.94(12.6) + 1.0 - 0)]$$

$$\underline{q_2 = 80.6 \text{ scfm}}$$

(3) Calculate air supply rate.

$$q = q_1 + q_2$$

where

q = total air supply, scfm

q_1 = sludge air supply, 272.5 scfm

q_2 = fuel air supply, 80.6 scfm

$$q = 272.5 + 80.6$$

$$\underline{q = 353.1}$$

i. Calculate total gas flow.

$$q_t = q + \frac{LR}{100 - M}\left(\frac{M}{3.01}\right)$$

where

q_t = total gas flow, scfm

q = air supply rate, 353.1 scfm

LR = loading rate, 160 lb/hr

M = moisture content, 60 percent

$$q_t = 353.1 + \frac{160}{100 - 60}\left(\frac{60}{3.01}\right)$$

$$\underline{q_t = 433 \text{ scfm}}$$

j. Calculate air preheater capacity.

(1) Calculate the air-to-sludge ratio.

$$ASR = \frac{4.5q}{LR}$$

where

ASR = air-to-sludge ratio, lb air/lb sludge

q = air supply rate, 353.1 scfm

LR = loading rate, 160 lb/hr

$$ASR = \frac{4.5(353.1)}{160}$$

$$\underline{ASR = 9.9 \text{ lb air/lb sludge}}$$

(2) Calculate air preheater capacity.

$$APHS = 0.24(ASR)(T_2 - T_1)LR$$

where

APHS = air preheater capacity, Btu/hr

ASR = air-to-sludge ratio, 9.9 lb air/lb sludge

T_2 = operating temperature, 1100°F

T_1 = incoming air temperature, 72°F

LR = loading rate, 160 lb/hr

$$APHS = 0.24(9.9)(1100 - 72)160$$

$$\underline{APHS = 390{,}804 \text{ Btu/hr}}$$

k. Assume a retention time for incinerator.

$$\underline{dt = 15 \text{ sec}}$$

l. Determine volume of reactor.

$$V = q_t \left(\frac{dt}{60} \right)$$

where

V = volume of reactor, ft^3

q_t = total gas flow, 433 scfm

dt = detention time, 15 sec

$$V = 433\left(\frac{15}{60}\right)$$

$$\underline{V = 108.3 \text{ ft}^3}$$

m. Calculate height of reactor.

$$H = \frac{V}{A}$$

where

H = height of reactor, ft

V = volume of reactor, 108.3 ft^3

A = area of reactor, 6.7 ft^2

$$H = \frac{108.3}{6.7}$$

$$\underline{H = 16.2 \text{ ft}}$$

$$\frac{H}{D} = \frac{16.2}{2.92} = 5.5 \text{ (OK)}$$

n. Check heat release rate ($H_r \leq 50{,}000$ Btu/hr/ft).

$$H_r = \frac{HIR}{V}$$

where

H_r = heat release rate, Btu/hr/ft^3

HIR = heat input rate, 1,574,250 Btu/hr

V = volume, 108.3 ft^3

$$H_r = \frac{1{,}574{,}250}{108.3}$$

$$\underline{H_r = 14{,}536 \text{ Btu/hr/ft}^3 \leq 50{,}000 \text{ (OK)}}$$

o. Assume a sand-to-sludge ratio (Rss).

$$\underline{\text{Rss} = 5 \text{ lb/lb/hr}}$$

p. Calculate depth of ASTM No. 8 silica sand.

$$L = \frac{12(LR)(Rss)}{(\gamma_s)A}$$

where

L = depth of sand, in.

LR = loading rate, 160 $lb/ft^2/hr$

Rss = ratio, sand to sludge, 5 lb/lb/hr

γ_s = specific weight of sand, 110 lb/ft^3

A = area of reactor, 6.7 ft^2

$$L = \frac{12(160)5}{110(6.7)}$$

$$\underline{L = 13 \text{ in.}}$$

q. Calculate grid jet velocity.

$$V_j = 160 + 160 \log L$$

where

V_j = grid jet velocity, fps

L = depth of sand, 13 in.

$$V_j = 160 + 160 \log (13)$$

$$\underline{V_j = 338 \text{ fps} > 300 \text{ fps (OK)}}$$

5-135. Cost Data. Appropriate cost data and economic evaluation may be found in Chapter 8.

5-136. Bibliography.

a. "Air Pollution Aspects of Sludge Incineration," EPA Technology Transfer, EQA 625/4-75-009, June 1975.

b. Alford, J. M., "Sludge Disposal Experiences at North Little Rock, Arkansas," Journal, Water Pollution Control Federation, Vol 41, No. 1, pp 175-183.

c. Balakrishnan, S., Williamson, D., and Odey, R., "State of the Art Review on Sludge Incinerator Practices," FWQA. 17070 Div 04/70, April 1970.

d. Burgess, J. V., "Comparison of Sludge Incinerator Processes," Process Biochemistry, Vol 3, No. 7, 1968, pp 27-30.

e. Cardinal, P. J., "Advances in Multihearth Incineration," Process Biochemistry, Vol 6, 1971, pp 27-31.

f. Copeland, C. G., "Design and Operation of Fluidized Bed Incinerators," Water and Sewage Works, Vol 117, 1970, p R245-9.

g. Copeland, C. G., "The Copeland Process Fluid Bed System and Pollution Control Worldwide," Proceedings, 19th Industrial Waste Conference, Purdue University, Lafayette, Indiana, 1964.

h. Copeland, C. G., "Water Reuse and Black Liquor Oxidation by the Container-Copeland Process," Proceedings, 19th Industrial Waste Conference, Purdue University, Indiana, 1964.

i. Fair, G. M. and Geyer, J. C., Elements of Water Supply and Waste Water Disposal, John Wiley and Sons, Inc., New York, 1955.

j. Fair, G. M., and Moore, E. W., "Sewage Sludge Fuel Value Related to Volatile Matter," Eng. News Record, 1935, p 681.

k. Gaillard, J. R., "Fluidized Bed Incineration of Sewage Sludge," Water Pollution Control, Vol 73, pp 190-192, 1973.

l. Hanway, J. E., "Fluidized-Bed Processes - A Solution for Industrial Waste Problems," Proceedings, 21st Industrial Waste Conference, Purdue University, Lafayette, Indiana, 1966.

m. Harkness, N. et al, "Some Observations on the Incineration of Sewage Sludge," Water Pollution Control, Vol 71, No. 1, 1972, pp 16-33.

n. Liao, P. B., "Fluidized-Bed Sludge Incinerator Design," Journal, Water Pollution Control Federation, Vol 46, No. 8, 1974, pp 1895-1913.

o. Liao, P. B. and Pilat, M. J., "Air Pollutant Emissions from Fluidized Bed Sewage Sludge Incinerators," Water and Sewage Works, Vol 119, No. 2, pp 68-72.

p. Liptak, B. G., Environmental Engineers Handbook, Vol 1, Chilton Book Company, Radnor, Pennsylvania, 1974.

q. Loran, B. I., "Burn That Sludge," Water and Wastes Engineering, Vol 12, No. 10, 1975, pp 65-68.

r. Millward, R. S. and Booth, P. B., "Incorporating Sludge Combustion Into Sewage Treatment Plant," Water and Sewage Works, Vol 115, No. R-169-174, 1968.

s. Pavoni, J. L. et al, Handbook of Solid Waste Disposal, Van Nostrand Reinhold Company, New York, 1975.

t. "Process Design Manual for Sludge Treatment and Disposal," EPA Technology Transfer, EPA 625/11-74-006, October 1974.

u. "Sludge Incineration Plant Uses Fluid-Bed Furnace," Chemical and Process Engineering, April 1972, p 7.

v. Vesilind, P. A., Treatment and Disposal of Wastewater Sludges, Ann Arbor Science, Ann Arbor, Mich., 1974.

Table 5-33. Normal Quantities of Sludge Produced by Different Treatment Processes

Wastewater Treatment Process	Gallons Sludge/ mg Treated	Solids percent	Sludge Specific Gravity
Primary sedimentation			
Undigested	2,950	5.0	1.02
Digested in separate tanks	1,450	6.0	1.03
Trickling filter	745	7.5	1.025
Chemical precipitation	5,120	7.5	1.03
Primary sedimentation and activated sludge			
Undigested	6,900	4.0	1.02
Digested in separate tanks	2,700	6.0	1.03
Activated sludge			
Waste sludge	19,400	1.5	1.005
Septic tanks, digested	900	10.0	1.04
Imhoff tanks, digested	500	15.0	1.04

Table 5-34. Process Efficiencies for Dewatering of Wastewater Sludge

Unit Process	Solids Capture, percent	Cake Solids, percent
Centrifugation		
Solid bowl	80-90	5-13
Disc-nozzle	80-97	5-7
Basket	70-90	9-10
Dissolved air flotation	95	4-6
Drying beds	85-99	8-25
Filter press	99	40-60
Gravity thickener	90-95	5-12
Vacuum filter	90+	28-35

From EPA Process Design Manual for Sludge Treatment and Disposal

Table 5-35. Recommended Fluidized Bed Sludge Incinerator Design Criteria

Parameter	Magnitude
Sludge loading rate*	5 to 40 lb dry sludge/hr/ft^2
Burning rate	Up to 300,000 Btu/hr/ft^2
Heat release rate	Up to 50,000 Btu/hr/ft^3
Air:dry sludge ratio	6 to 50 lb/lb
Fuel:dry sludge ratio*	0 to 30,000 Btu/lb
Combustion temperature	1200 to 1400°F
Retention time (at standard conditions)	10 $\leq$ time $\leq$ 50 sec
Pressure drop	50 to 100 in. of water
Height:diameter ratio	4 to 6:1
Grid jet velocity	Greater than 300 fps
Freeboard gas velocity	5 to 10 fps
Stack gas velocity	20 to 50 fps
Ratio of freeboard diameter:grid diameter	1.5
Ratio of No. 8 sand to sludge rate**	3 to 8 lb/hr/lb

* Sludge loading rates and air and fuel requirements depend on sludge moisture content and the ratio of air and sludge.

** Sand to sludge ratios depend on sludge moisture content.

CHAPTER 6

CHEMICAL UNIT PROCESSES

Section I. INTRODUCTION

6-1. Definition. Chemical processes may involve the addition of chemicals, the use of chemical reaction columns, and the use of electrical currents. In the process design procedure, although the fundamentals of chemistry are not discussed, a basic knowledge of chemistry is helpful when assessing the applicability of such processes to a particular waste treatment problem. The processes included in this section are:

a. Carbon adsorption.

b. Chemical coagulation.

c. Ammonia stripping.

d. Chlorination.

e. Ion exchange.

f. Neutralization.

g. Recarbonation.

h. Two-stage lime treatment.

(next page is 6-3)

Section II. CARBON ADSORPTION

6-2. Background.

a. Adsorption is the process by which matter is extracted in a first phase and concentrated at the surface in a second phase. Adsorption with activated carbon has long been used to remove taste and odor-causing impurities from public water supplies. However, with the advent of physicochemical systems, carbon adsorption has emerged as a practical, reliable, and economically competitive process in wastewater treatment.

b. The most efficient and practical use of activated carbon in wastewater treatment has been in fixed beds of granular carbon in combination with chemical coagulation and precipitation for the removal of suspended impurities. In such systems, the wastewater is applied to the bed at a rate ranging from 4 to 8 gpm/ft^2. Contact times employed range from 30 to 60 min. Provision must be made to regularly backwash packed bed carbon systems to flush out accumulated suspended solids and biological growth. A good design practice is to allow for a bed expansion of from 10 to 15 percent. Flow rates during backwashing may range from 10 to 15 gpm/ft^2. Biological growth can be controlled effectively by chlorination of influent to the columns or by chlorination during the regular backwash operation. Figure 6-1 shows a typical activated-carbon adsorption column.

c. Packed beds of granular carbon are suitable only for wastewaters containing low suspended solids. However, biological growth and an accumulation of solids present in the waste have often presented problems in the use of packed bed adsorbers. To eliminate these problems, expanded bed adsorbers have been recommended. This system passes the waste upward through the bed at velocities sufficient to expand the bed about 10 percent. Expanded beds require little or no cleaning or backwashing and have low and constant feed pressure requirements.

d. The adsorption capacity of the activated carbon can be measured, to a fair degree, by conducting isotherm studies in the laboratory. Design data, however, must be evaluated from pilot plant carbon column tests. These data will include the minimum contact time required to produce the desired effluent quality, optimum flow rates, head loss at various flows, backwash rate, and required carbon dosage. The effluent resulting from physicochemical treatment systems has been reported to

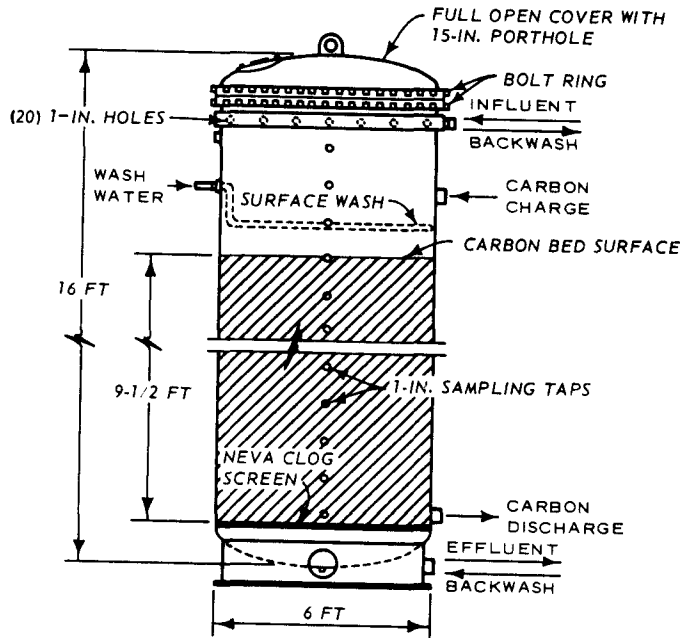

From Metcalf and Eddy, 1972

Figure 6-1. Typical activated-carbon adsorption column.

be crystal clear and suitable for many reuse applications. Carbon adsorption should be considered in the design of physicochemical systems.

6-3. Input Data.

a. Wastewater flow, mgd.

(1) Average daily flow, mgd.

(2) Flow variations, mgd.

b. Wastewater characteristics.

(1) BOD, mg/ℓ.

(2) Chemical oxygen demand (COD), mg/ℓ.

(3) Suspended solids, mg/ℓ.

(4) pH.

(5) Total organic carbon (TOC), mg/ℓ.

6-4. Design Parameters.

a. Carbon requirements, lb/million gal (from pilot plant).

(1) Tertiary treatment (≈250-350 lb/million gal).

(2) Secondary treatment (≈500-1800 lb/million gal).

b. Hydraulic loading (4-8 gpm/ft^2).

c. Contact time (30-60 min).

d. Backwash rate (10-15 gpm/ft^2).

e. Breakpoint concentration.

f. Backwash time, min.

g. Adsorption capacity, lb/ft^3 (from laboratory study).

h. Rate constant, ft^3/lb carbon/hr (from laboratory study).

6-5. Design Procedure.

a. Select a minimum contact time and calculate bed volume.

$$\text{Vol} = (\text{MCT})(Q_p)\left(\frac{10^6}{60}\right)\left(\frac{1}{7.48}\right)\left(\frac{1}{24}\right)$$

where

Vol = volume of bed, ft^3

MCT = minimum contact time, min

Q_p = peak waste flow, mgd

b. Select a minimum flow rate and calculate surface area.

$$SA = \left(\frac{Q_p}{FR}\right)\left(\frac{10^6}{60}\right)\left(\frac{1}{24}\right)$$

where

SA = surface area, ft^2

Q_p = peak waste flow, mgd

FR = flow rate, gpm/ft^2

c. Calculate column depth.

$$CD = \left(\frac{Vol}{SA}\right)$$

where

CD = column depth, ft

Vol = volume of bed, ft^3

SA = surface area, ft^2

d. Calculate total service time.

$$ST = \frac{(N_o)(7.48)}{(0.624 \times 10^{-4})(60)C_o(FR)}\left[(CD) - \frac{(FR)\left(\frac{60}{7.48}\right)}{KN_o}\ln\left(\frac{C_o}{C_B} - 1\right)\right]$$

where

ST = total service time to breakthrough, hr

N_o = equilibrium adsorption capacity of carbon, lb TOC/ft^3-carbon (from pilot plant)

C_o = initial concentration, mg/ℓ

FR = flow rate, gpm/ft^2

CD = column depth, ft

K = rate constant, ft^3/lb carbon/hr (from laboratory or pilot plant)

ln = natural log

C_B = concentration at break point, mg/ℓ

0.624×10^{-4} = conversion factor, mg/ℓ to lb/ft^3

e. Calculate total volume of waste treated before exhaustion.

$$TVWT = (ST)(Q_{avg})\left(\frac{1}{24}\right)$$

where

TVWT = total volume waste treated prior to exhaustion, million gal

ST = total service time, hr

Q_{avg} = average waste flow, mgd

f. Calculate frequency of column regeneration per month.

$$NCRM = \left(\frac{Q_{avg}}{TVWT}\right)(30)(10^6)$$

where

NCRM = frequency of column regeneration/month

Q_{avg} = average waste flow, mgd

TVWT = total volume of waste treated per one regeneration

g. Calculate bed efficiency.

$$eff = \frac{(TVWT)(C_o - C_B)(8.34)}{(N_o)(Vol)}(100)$$

where

eff = bed efficiency, percent

TVWT = total volume of waste treated, million gal

C_o = initial concentration, mg/ℓ

C_B = breakpoint concentration, mg/ℓ

N_o = equilibrium adsorption capacity, lb TOC/ft^3

Vol = volume of bed, ft^3

h. Select a flow rate for backwashing and calculate water requirement.

$$WRBW = (RFR)(SA)$$

where

WRBW = water requirements for backwashing, gpm

RFR = backwashing flow rate, gpm/ft^2

SA = surface area of bed, ft^2

i. Select total time for backwashing and calculate total volume of backwash water.

$$VBWW = (WRBW)(BWT)$$

where

VBWW = total volume of backwash water, gal

WRBW = backwash water requirement, gpm

BWT = total backwash time, min

6-6. Output Data.

a. Carbon requirements, lb/million gal.

b. Minimum contact time, min.

c. Flow rate, gpm/ft^2.

d. Backwash rate, gpm/ft^2.

e. Backwash time, min.

f. Bed volume, ft^3.

g. Surface area, ft^2.

h. Column depth, ft.

i. Service time prior to regeneration, hr.

j. Volume treated prior to regeneration, gal.

k. Frequency of regeneration/month.

l. Bed efficiency, percent.

m. Volume of backwash water, gal.

6-7. Example Calculations.

a. Select a minimum contact time and calculate bed volume.

$$\text{Vol} = \text{MCT}(Q_p)\left(\frac{10^6}{60}\right)\left(\frac{1}{7.48}\right)\left(\frac{1}{24}\right)$$

where

Vol = volume of bed, ft^3

MCT = minimum contact time, 45 min

Q_p = peak wastewater flow, 2 mgd

$$Vol = 45(2)\left(\frac{10^6}{60}\right)\left(\frac{1}{7.48}\right)\left(\frac{1}{24}\right)$$

$$\underline{Vol = 8356\ ft^3}$$

b. Select a minimum flow rate and calculate surface area.

$$SA = \left(\frac{Q_p}{FR}\right)\left(\frac{10^6}{60}\right)\left(\frac{1}{24}\right)$$

where

SA = surface area, ft^2

Q_p = peak wastewater flow, 2.0 mgd

FR = flow rate, 4.0 gpm/ft^2

$$SA = \left(\frac{2.0}{4.0}\right)\left(\frac{10^6}{60}\right)\left(\frac{1}{24}\right)$$

$$\underline{SA = 347\ ft^2}$$

c. Calculate column depth.

$$CD = \frac{Vol}{SA}$$

where

CD = column depth, ft

Vol = volume of column, 8356 ft^3

SA = surface area, 347 ft^2

$$CD = \frac{8356}{347}$$

$$\underline{CD = 24 \text{ ft}}$$

d. Calculate total service time.

$$ST = \frac{(N_o)(7.48)}{(0.624)(10^{-4})(60)(C_o)(FR)} \left[(CD) - \frac{(FR)\left(\frac{60}{7.48}\right)}{KN_o} \ln \left(\frac{C_o}{C_B} - 1 \right) \right]$$

where

ST = total service time to breakthrough, hr

N_o = equilibrium adsorption capacity of carbon, 4.4 lb TOC/ft^3

C_o = initial concentration, 100 mg/ℓ

FR = flow rate, 4.0 gpm/ft^2

CD = column depth, 24 ft

K = rate constant, 11.0

C_B = concentration at breakpoint, 20 mg/ℓ

0.624×10^{-4} = conversion factor, mg/ℓ to lb/ft^3

$$ST = \frac{(4.4)(7.48)}{(0.624)(10^{-4})(60)(100)(4)} \left[(24) - \frac{(4)\left(\frac{60}{7.48}\right)}{(11)(4.4)} \ln \left(\frac{100}{20} - 1 \right) \right]$$

$$\underline{ST = 507 \text{ hr}}$$

e. Calculate total volume of waste treated before exhaustion.

$$TVWT = ST(Q_{avg}) \left(\frac{1}{24}\right)$$

where

TVWT = total volume of waste treated before exhaustion, million gal

ST = total service time to breakthrough, 507 hr

Q_{avg} = average flow, 1.0 mgd

$$TVWT = 507(1.0) \left(\frac{1}{24}\right)$$

$$\underline{TVWT = 21.125 \text{ million gal}}$$

f. Calculate frequency of column regeneration per month.

$$NCRM = \frac{Q_{avg}}{TVWT} (30)$$

where

NCRM = number of column regenerations per month

Q_{avg} = average flow, 1.0 mgd

TVWT = total volume of waste treated before exhaustion, 21.125 million gal

$$NCRM = \frac{1.0}{21.125} (30)$$

$$\underline{NCRM = 1.42 \text{ regenerations/month}}$$

g. Calculate bed efficiency.

$$eff = \frac{TVWT(C_o - C_B)(8.34)}{N_o(Vol)} 100$$

where

eff = bed efficiency, percent

TVWT = total volume of waste treated, 21.125 million gal

C_o = initial concentration, 100 mg/ℓ

C_B = breakpoint concentration, 20 mg/ℓ

N_o = equilibrium adsorption capacity, 4.4 lb TOC/ft^3

Vol = volume of bed, 8356 ft^3

$$eff = \frac{21.125(100 - 20)(8.34)}{4.4(8356)} 100$$

$$\underline{eff = 38 \text{ percent}}$$

h. Select a flow rate for backwashing and calculate water requirement.

$$WRBW = RFR(SA)$$

where

WRBW = water requirements for backwashing, gpm

RFR = backwashing flow rate, 15 gpm/ft^2

SA = surface area, 347 ft^2

$$WRBW = 15(347)$$

$$\underline{WRBW = 5205 \text{ gpm}}$$

i. Select total time for backwashing and calculate total volume of backwash water.

$$VBWW = WRBW(BWT)$$

where

VBWW = total volume of backwash water, gal

WRBW = backwash water requirement, 5205 gpm

BWT = total backwash time, 15 min

$$VBWW = 5{,}205(15)$$

$$\underline{VBWW = 78{,}075 \text{ gal}}$$

6-8. Cost Data. Appropriate cost data and economic evaluation may be found in Chapter 8.

6-9. Bibliography.

a. Cover, A. E. and Pieron, L. J., "Appraisal of Granular Carbon Contactors Phase I and II," Report No. TWRC-11, May 1969, Federal Water Pollution Control Administration, Washington, D. C.

b. Cover, A. E. and Wood, C. E., "Appraisal of Granular Carbon Contactors Phase III," Report No. TWRC-12, May 1969, Federal Water Pollution Control Administration, Washington, D. C.

c. Culp, R. L. and Culp, G. L., Advanced Wastewater Treatment, Van Nostrand, New York, 1971.

d. Eckenfelder, W. W., Jr., Industrial Water Pollution Control, McGraw-Hill, New York, 1966.

e. Metcalf and Eddy, Inc., Wastewater Engineering; Collection, Treatment, and Disposal, McGraw-Hill, New York, 1972.

f. Mine Safety Appliances Research Corporation, "Optimization of the Regeneration Procedure for Granular Activated Carbon," Report No. 17020DAO, Jul 1970, U. S. Environmental Protection Agency, Washington, D. C.

g. South Tahoe Public Utility District, "Advanced Wastewater Treatment as Practiced at South Tahoe," Report No. 17010ELQ, Aug 1971, U. S. Environmental Protection Agency, Washington, D. C.

h. Swindell-Dresser Company, "Process Design Manual for Carbon Adsorption," Oct 1971, U. S. Environmental Technology Transfer, Washington, D. C.

i. U. S. Environmental Protection Agency, Technology Transfer, "Process Design Manual for Upgrading Existing Wastewater Treatment Plants," 1973, Washington, D. C.

j. Weber, W. J., Jr., "Principles and Applications of Adsorption," Manual of Treatment Processes, Environmental Science Services, Inc., Briarcliff Manor, New York, 1969.

k. Weber, W. J., Jr., Physicochemical Processes for Water Quality Control, Wiley-Interscience, New York, 1972.

(next page is 6-17)

Section III. CHEMICAL COAGULATION

6-10. Background.

a. Chemical coagulation involves the aggregation of small particles into large, more readily settleable conglomerates. Chemical coagulation is a common process used in water treatment for the removal of turbidity and color. In wastewater treatment, chemical coagulation has been used to remove colloidal and suspended matter from raw wastes, remove phosphorus, remove algae from oxidation pond effluents, and enhance sludge dewaterability.

b. Wastewater can be coagulated using any of the coagulants common for water treatment. The most widely used chemicals include: iron salts (ferric chloride, ferric sulfate, ferrous chloride, and ferrous sulfate), aluminum salts (alum and sodium aluminate), lime, and synthetic polymers. The choice of chemicals should be based on careful evaluation of the wastewater characteristics, availability and cost of the coagulant, and sludge handling and disposal characteristics. Jar tests must be conducted to determine the coagulant dosage, the optimum conditions for coagulation, the quality of the effluent, and the characteristics of the chemical sludge.

c. Chemical coagulation systems normally consist of rapid mix basins for dispersion of the coagulants, flocculation basins where the coagulated solids agglomerate to form settleable solids, and settling basins to separate the floc from the liquid. Rapid mix basins are equipped with high-speed mixing devices designed to create velocity gradients of 300 fps/ft or more with a detention time of 15-60 sec. Power requirements for mechanical mixers range from 0.25 to 1 hp/mgd.

d. Flocculation may be accomplished in a separate basin or in an integral part of the clarifier structure. The velocity in the conduits conveying the floc to the clarifier should be 0.5-1.0 fps to prevent shearing of the floc. Velocity gradients ranging from 30 to 100 fps/ft may be induced by mechanical means (usually revolving paddles), or by air diffusion. Flocculator detention times of 15-60 min have commonly been used in water treatment plant design.

e. Clarifiers for the separation of the chemical floc are usually designed on the basis of hydraulic loadings (chap 5, sec VIII). Typical hydraulic loadings for clarifiers (sedimentation basins) processing various types of chemical sludges are presented in Table 6-1. Detention times ranging from 2 to 6 hr have been used (Table 6-2).

f. Chemical coagulation may be used as a part of a physicochemical treatment system or for phosphorus removal from wastewaters generated at recreation areas.

6-11. Input Data.

a. Wastewater flow, mgd.

(1) Average daily flow, mgd.

(2) Variation in flow, mgd.

b. Wastewater characteristics.

(1) BOD, total and soluble, mg/ℓ.

(2) COD, total and soluble, mg/ℓ.

(3) Phosphorus, mg/ℓ.

(4) Suspended solids, mg/ℓ.

(5) pH.

(6) Alkalinity, mg/ℓ.

6-12. Design Parameters.

a. Desired quality of treated effluent, mg/ℓ.

b. Coagulant dosage, mg/ℓ (jar test).

c. Detention time of rapid mix basin (1-3 min).

d. Detention time of flocculator basin (15-60 min).

6-13. Design Procedure.

a. Calculate coagulant requirements.

$$CR = (CD)(Q_{avg})(8.34)$$

where

CR = coagulant requirements, lb/day

CD = coagulant dosage, mg/ℓ

Q_{avg} = average daily flow, mgd

b. Calculate volume of flash mixing basin.

$$VFM = (Q_p)(DTFM)(10^6)\left(\frac{1}{60}\right)\left(\frac{1}{24}\right)$$

where

VFM = volume of flash mix basin, gal

Q_p = peak flow, mgd

DTFM = detention time of flash mixer, min (1-3 min)

c. Calculate volume of flocculator basin.

$$VFL = (Q_p)(DTFL)(10^6)\left(\frac{1}{60}\right)\left(\frac{1}{24}\right)$$

where

VFL = volume of flocculator basin, gal

Q_p = peak flow, mgd

DTFL = detention time of flocculator basin, min (15-60 min)

d. Design clarifier as presented under the design of primary sedimentation.

6-14. Output Data.

a. Coagulation process.

(1) Coagulant dosage, mg/ℓ.

(2) Optimum pH.

(3) Rapid mix detention time, min.

(4) Flocculator detention time, min.

(5) Coagulant requirement, lb/day.

(6) Volume of flash mix basin, gal.

(7) Volume of flocculator basin, gal.

b. Clarifier.

(1) Overflow rate, gal/day/ft^2.

(2) Surface area, ft^2.

(3) Side water depth, ft.

(4) Detention time, hr.

(5) Solid loading, lb/ft^2/day.

(6) Weir loading, gal/ft/day.

(7) Weir length, ft.

(8) Volume of sludge produced, gal/day.

(9) Suspended solids removal, percent.

(10) BOD removal, percent.

(11) COD removal, percent.

(12) Total Kjeldahl nitrogen (TKN) removal, percent.

(13) PO_4 removal, percent.

6-15. Example Calculations.

a. Calculate coagulant requirements.

$$CR = CD(Q_{avg})8.34$$

where

CR = coagulant requirements, lb/day

CD = coagulant dosage, 20 mg/ℓ

Q_{avg} = average flow, 1.0 mgd

$$CR = 20(1.0)8.34$$

$$\underline{CR = 166.8 \text{ lb/day}}$$

b. Calculate volume of flash mixing basin.

$$VFM = \frac{Q_p(DTFM)10^6}{60(24)}$$

where

VFM = volume of flash mix basin, gal

Q_p = peak flow, 2.0 mgd

DTFM = detention time flash mixer, 1 min

$$VFM = \frac{2.0(1.0)10^6}{(60)24}$$

$$\underline{VFM = 1389 \text{ gal}}$$

c. Calculate volume of flocculator basin.

$$VFL = \frac{Q_p(DTFL)10^6}{60(24)}$$

where

VFL = volume of flocculator basin, gal

Q_p = peak flow, 2.0 mgd

DTFL = detention time flocculator, 30 min

$$VFL = \frac{2.0(30)10^6}{(60)24}$$

$$\underline{VFL = 41,667 \text{ gal}}$$

d. Design clarifier as presented under the design of primary sedimentation.

6-16. Cost Data. Appropriate cost data and economic evaluation may be found in Chapter 8.

6-17. Bibliography.

a. American Water Works Association, Water Quality and Treatment, McGraw-Hill, New York, 1971.

b. Camp, T. R., "Flocculation and Flocculation Basins," Transactions, American Society of Civil Engineers, Vol 120, 1955, pp 1-16.

c. Cohen, J. M. and Hannah, S. A., "Coagulation and Flocculation," Water Quality and Treatment, McGraw-Hill, New York, 1971.

d. Culp, R. L. and Culp, G. L., Advanced Wastewater Treatment, Van Nostrand, New York, 1971.

e. Eckenfelder, W. W., Jr., and Cecil, L. K., Application of New Concepts of Physical-Chemical Wastewater Treatment, Pergamon Press, New York, 1972.

f. Metcalf and Eddy, Inc., Wastewater Engineering; Collection, Treatment, and Disposal, McGraw-Hill, New York, 1972.

g. O'Melia, C. R., "Coagulation in Water and Wastewater Treatment," Advances in Water Quality Improvements--Physical and Chemical Processes, E. F. Gloyna and W. W. Eckenfelder, Jr., ed., University of Texas Press, Austin, 1970.

h. Sawyer, C. N. and McCarty, P. L., Chemistry for Sanitary Engineers, McGraw-Hill, New York, 1967.

i. Stumm, W. and Morgan, J. J., Aquatic Chemistry, Wiley, New York, 1970.

j. Stumm, W. and O'Melia, C. R., "Stoichiometry of Coagulation," Journal, American Water Works Association, Vol 60, 1968, pp 514-539.

k. Weber, W. J., Jr., Physiochemical Processes for Water Quality Control, Wiley-Interscience, New York, 1972.

Table 6-1. Recommended Surface-Loading Rates for Various Suspensions

Suspension	Loading Rate, gpd/ft^2 Range	Peak Flow
Untreated wastewater	600 to 1200	1200
Alum floc[a]	360 to 600	600
Iron floc[a]	540 to 800	800
Lime floc[a]	540 to 1200	1200

From Culp and Culp, 1971

(a) Mixed with the settleable suspended solids in the untreated wastewater and colloidal or other suspended solids swept out by the floc.

Table 6-2. Detention Times for Various Surface-Loading Rates and Tank Depths

Surface-Loading Rate, gpd/ft^2	Detention Time, hr 7-ft Depth	8-ft Depth	10-ft Depth	12-ft Depth
400	3.2	3.6	4.5	5.4
600	2.1	2.4	3.0	3.6
800	1.6	1.8	2.25	2.7
1000	1.25	1.4	1.8	2.2

From Culp and Culp, 1971

Section IV. AMMONIA STRIPPING

6-18. Background.

a. The process of ammonia stripping converts ammonium ions in the waste to ammonia gas and then strips off the ammonia gas by agitating the waste in ammonia-free air. Ammonium ions in wastewater exist in equilibrium with ammonia and hydrogen ions as follows:

$$NH_4^+ \rightleftarrows NH_3 + H^+$$

As shown in the equation above, raising the wastewater pH above 7 will shift the equilibrium to the right, thus ammonia gas is formed. Raising the pH beyond 11 will, therefore, convert most of the ammonium ions to ammonia gas which can be liberated by agitation of the wastewater in a stripping tower equipped with an air blower.

b. Ammonia stripping towers may be operated as crosscurrent or countercurrent flow; most designers now seem to prefer the crosscurrent design.

c. Limitations of ammonia stripping towers were first revealed during the initial operation of the Lake Tahoe project, conducted during the winter season. Some of these limitations are:

(1) The towers are inoperable at air temperature below 0°C due to the freezing of water at the air inlet.

(2) Since ammonia solubility increases with decreasing temperatures, more air is required to remove it (800 ft^3/gal at 0°C), resulting in increased cost of treatment.

(3) A mostly calcium carbonate scale forms in the tower.

d. Typical design parameters for various ammonia levels of removals obtained during the Lake Tahoe tests are summarized in Table 6-3.

e. Figure 6-2 is a typical flow sheet for ammonia stripping of raw wastewater. Figure 6-3 is a typical flow sheet for the stripping of ammonia from digester supernatant.

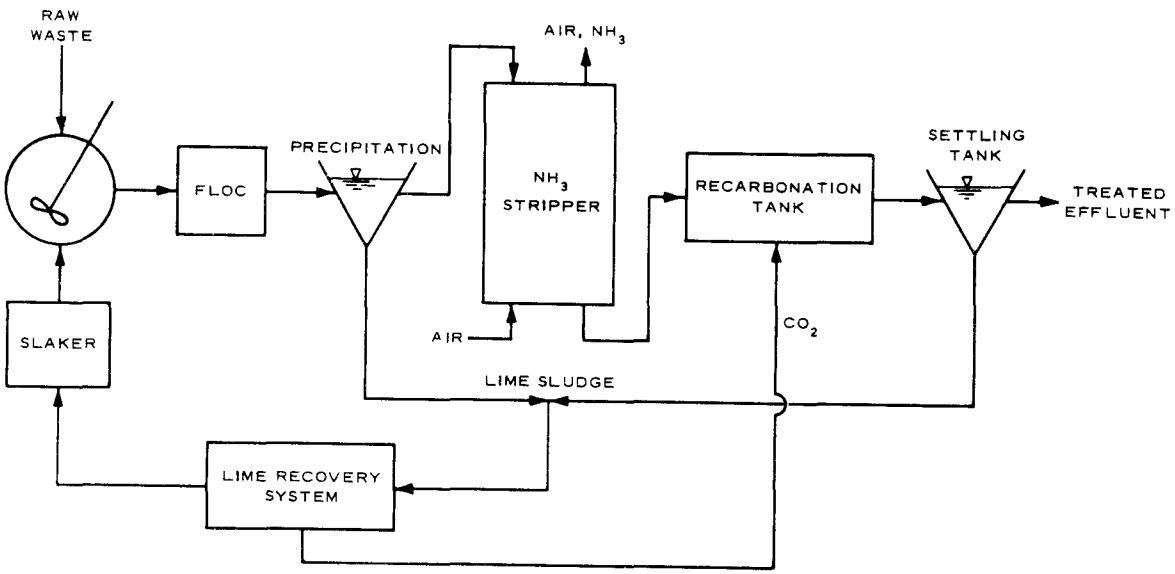

Figure 6-2. Typical flow sheet for ammonia stripping of raw wastewater.

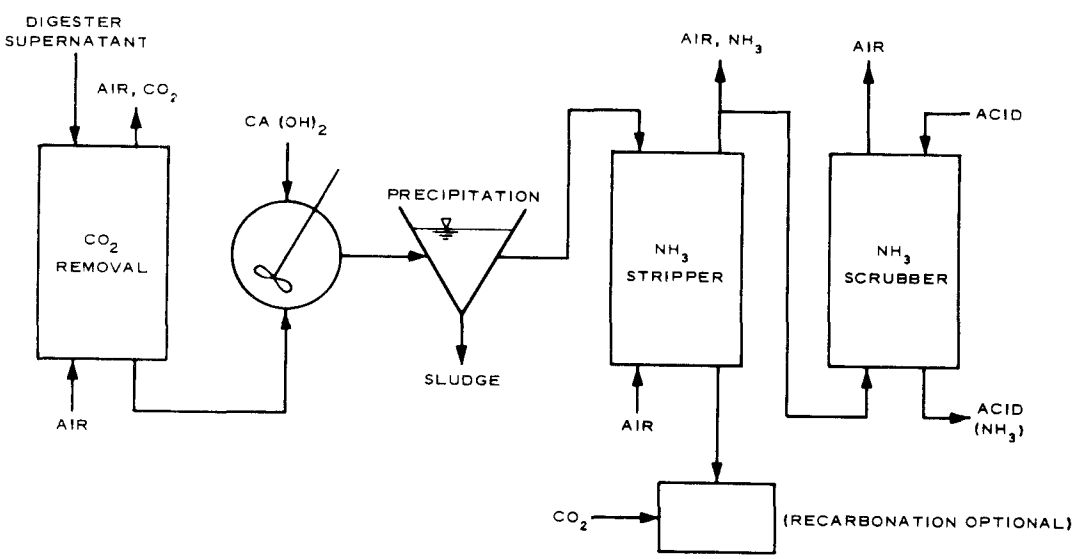

Figure 6-3. Typical flow sheet for the stripping of ammonia from digester supernatant.

6-19. Input Data.

a. Wastewater flow.

(1) Average flow, mgd.

(2) Peak flow, mgd.

b. Wastewater characteristics.

(1) Ammonia concentration, mg/ℓ.

(2) pH.

(3) Temperature, °F.

(4) Air temperature, °F.

6-20. Design Parameters.

a. Desired effluent quality, mg/ℓ.

b. Liquid loading rate, lb water/hr/ft^2 (500-1000).

c. Gas loading rate, lb air/hr/ft^2.

d. Packing characteristics (from manufacturer).

e. Lime dose to pH 11-12, mg/ℓ.

f. Height of transfer unit, ft (from manufacturer).

g. Ammonia concentration in liquid at bottom of tower, mg/ℓ.

h. Ammonia concentration in air at bottom of tower, mg/ℓ.

6-21. Design Procedure.

a. Select a liquid loading rate and calculate the surface area.

$$SA = \frac{(Q_p)(8.34)(10^6)}{(LLR)(24)}$$

where

SA = surface area, ft^2

Q_p = peak flow, mgd

LLR = liquid loading rate, $lb/ft^2/hr$

b. Calculate gas loading rate.

$$GLR = (2 - 4)(LLR)$$

where

GLR = gas loading rate, lb $air/ft^2/hr$

LLR = liquid loading rate, $lb/ft^2/hr$

c. Calculate tower height.

(1) Four countercurrent towers.

$$z = (HTU)\left(\frac{1}{A - 1}\right)\log_e\left[\frac{(A - 1)\,X_1 + X_2 - \left(\frac{GLR}{LLR}\right)Y_1}{(A - 1)\,X_2 + X_2 - \left(\frac{GLR}{LLR}\right)Y_2}\right]$$

where

z = tower height, ft

HTU = height of transfer unit, ft (from manufacturer)

$$A = \frac{(m)\ (GLR)/29}{(LLR)/18}$$

$m = 0.1117e^{0.02612T}$ (Henry's law constant)

T = temperature, °F

GLR = gas loading rate, lb air/ft^2/hr

LLR = liquid loading rate, lb/ft^2/hr

X_1 = ammonia concentration in waste at top of tower, mg/ℓ

X_2 = ammonia concentration in waste at bottom of tower, mg/ℓ

Y_1 = ammonia concentration in air at bottom of tower, mg/ℓ, ≈0

Y_2 = ammonia concentration in air at top of tower, mg/ℓ

(2) For crosscurrent towers.

$$X = X_i e^{-m(GLR/LLR)(z/HTU)}$$

where

X = ammonia concentration in waste at z ft down the tower, mg/ℓ

X_i = initial ammonia concentration at top of tower, mg/ℓ

GLR = gas loading rate, lb air/ft^2/hr

LLR = liquid loading rate, lb/ft^2/hr

z = tower height, ft

HTU = height of transfer unit, ft (from manufacturer)

d. Calculate lime required to raise pH to 11:

$$LR = (Q_{avg})(LD)(8.34)$$

where

LR = lime requirement, lb/day

Q_{avg} = average flow, mgd

LD = lime dosage, mg/ℓ

6-22. Output Data.

a. Liquid loading rate, $lb/ft^2/hr$.

b. Gas loading rate, $lb/ft^2/hr$.

c. Tower surface area, ft^2.

d. Tower height, ft.

e. Effluent ammonia concentration, mg/ℓ.

f. Wastewater flow, mgd.

g. Initial ammonia concentration, mg/ℓ.

h. Lime requirements, lb/day.

6-23. Example Calculations.

a. Select a liquid loading rate and calculate the surface area.

$$SA = \frac{Q_p(8.34)10^6}{LLR(24)}$$

where

SA = surface area, ft^2

Q_p = peak flow, 2.0 mgd

LLR = liquid loading rate, 600 $lb/ft^2/hr$

$$SA = \frac{2.0(8.34)10^6}{600(24)}$$

$$\underline{SA = 1158\ ft^2}$$

b. Calculate gas loading rate.

$$GLR = 3(LLR)$$

where

GLR = gas loading rate, lb air/ft^2/hr

LLR = liquid loading rate, 600 lb/ft^2/hr

$$GLR = 3(600)$$

$$\underline{GLR = 1800 \text{ lb air/ft}^2\text{/hr}}$$

c. Calculate tower height. Use crosscurrent tower.

$$X = X_i e^{-m(GLR/LLR)(z/HTU)}$$

where

X = ammonia concentration in waste at z ft down the tower 2.0 mg/ℓ

X_i = initial ammonia concentration at top of tower, 30 mg/ℓ

m = constant, $0.1117e^{0.02612T}$ where T = temperature 85°F, m = 1.02866

GLR = gas loading rate, 1800 lb air/ft^2/hr

LLR = liquid loading rate, 600 lb/ft^2/hr

z = tower height, ft

HTU = height of transfer unit, 17 ft

$$2.0 = 30.0e^{-(1.02866)(1800/600)(z/17)}$$

$$\underline{z = 15 \text{ ft}}$$

d. Calculate lime required to raise pH to 11.

$$LR = Q_{avg}(LD)8.34$$

where

LR = lime required, lb/day

Q_{avg} = average flow, 1.0 mgd

LD = lime dosage (from laboratory experiments), 20 mg/ℓ

$$LR = 1.0(20)8.34$$

$$\underline{LR = 167 \text{ lb/day}}$$

6-24. Cost Data. Appropriate cost data and economic evaluation may be found in Chapter 8.

6-25. Bibliography.

a. Culp, R. L. and Culp, G. L., Advanced Wastewater Treatment, Van Nostrand, New York, 1971.

b. Roesler, J. F., Smith, R., and Eilers, R. G., "Mathematical Simulation of Ammonia Stripping Towers for Wastewater Treatment," Internal Report, Jan 1970, Advanced Waste Treatment Research Laboratory, Cincinnati, Ohio.

c. Slechta, A. F. and Culp, G. L., "Water Reclamation Studies at the South Tahoe Public Utility District," Journal, Water Pollution Control Federation, Vol 39, May 1967, pp 787-814.

d. Smith, R., "Design of Ammonia Stripping Towers for Wastewater Treatment," Seminar on Process Design for Water Quality Control, 9-13 Nov 1970, Vanderbilt University, Nashville, Tenn.

e. Snow, R. H. and Wenk, W. J., "Ammonia Stripping Mathematical Model for Wastewater Treatment," Report No. IITRI-C6152-6, Dec 1968, Federal Water Pollution Control Administration, Washington, D. C.

Table 6-3. Air and Surface-Loading Rrequirements for 20- and 24-Ft Towers for Various Ammonia Removal

	20-ft Depth		24-ft Depth	
Percent Ammonia - N Removal	ft^3 air/gal	Surface Loading gpm/ft^2	ft^3 air/gal	Surface Loading gpm/ft^2
80	230	3.6	200	3.9
85	240	3.2	210	3.55
90	280	2.5	250	3.0
95			400	2.0
98			800	0.8

From Culp and Culp, 1971

(next page is 6-35)

Section V. CHLORINATION

6-26. Background.

a. Disinfection is the selective destruction of pathogenic organisms; sterilization is the complete destruction of all microorganisms. Disinfection may be considered as one of the most important processes in wastewater treatment. This practice used in wastewater treatment has resulted in the virtual disappearance of waterborne diseases.

b. Disinfection may be accomplished through the use of chemical agents, physical agents, mechanical means, and radiation. In wastewater treatment, the most commonly used disinfectant is chlorine; however, other halogens, ozone, and ultraviolet radiation have been used.

c. The rate of disinfection by chlorine depends on several factors, including chlorine dosage, contact time, presence of organic matter, pH, and temperature. The recommended chlorine dosage for disinfection purposes is that which produces a chlorine residual of 0.5 to 1 mg/ℓ after a specified contact time. Effective contact time of not less than 15 min at peak flow is recommended. Typical chlorine dosages recommended for disinfection and odor control are presented in Table 6-4.

d. The most common forms of chlorine used in wastewater treatment plants are calcium and sodium hypochlorites and chlorine gas. Hypochlorites are recommended for small treatment plants where simplicity and safety are more important than cost. Chlorine gas may be applied as a gas, or mixed with water to form a solution, a method used almost exclusively in wastewater treatment.

e. The design of the chlorine contact tank plays an important role in the degree of effectiveness produced from chlorination. Factors which must be considered in the design include method of chlorine addition, degree of mixing, minimization of short circuiting, and elimination of solids settling. A recent study (para 6-33d) indicated that, to minimize short-circuiting, the basin outlet may be designed as a sharp-crested weir that spans the entire width of the basin outlet. The longitudinal baffling of a serpentine flow basin was superior to cross-baffling; a length-to-width ratio of 40 to 1 was necessary to reach maximum plug flow performance regardless of the type of baffling.

6-27. Input Data.

a. Chlorine contact tank influent flow, mgd.

b. Peak flow, mgd.

c. Average flow, mgd.

6-28. Design Parameters.

a. Contact time at maximum flow, min.

b. Length-to-width ratio.

c. Number of tanks.

d. Chlorine dosage, mg/ℓ.

6-29. Design Procedure.

a. Select contact time at peak flow and calculate volume of contact tank.

$$VCT = \frac{Q_p(CT) \times 10^6}{(24)(60)}$$

where

VCT = volume of contact tank, gal

Q_p = peak flow, mgd

CT = contact time at maximum flow, min

b. Select a side water depth and calculate surface area.

$$SA = \frac{(VCT)}{(7.48)(SWD)}$$

where

SA = surface area, ft^2

VCT = volume of contact tank, gal

SWD = side water depth ≈8 ft

c. Select a length-to-width ratio and calculate dimensions.

$$CTW = \left(\frac{SA}{RLW}\right)^{1/2}$$

$$CTL = \frac{SA}{CTW}$$

where

CTW = contact tank width, ft

SA = surface area, ft^2

RLW = length-to-width ratio

CTL = contact tank length, ft

d. Select chlorine dosage (Table 6-4) and calculate chlorine requirements.

$$CR = (Q_{avg})(CD)(8.34)$$

where

CR = chlorine requirement, lb/day

Q_{avg} = average flow, mgd

CD = chlorine dosage, mg/ℓ

e. Calculate peak chlorine requirements:

$$PCR = (CR)\frac{Q_p}{Q_{avg}}$$

where

PCR = peak chlorine requirements, lb/day

CR = chlorine requirements, lb/day

Q_p = peak flow, mgd

Q_{avg} = average flow, mgd

6-30. Output Data.

a. Maximum flow, mgd.

b. Average flow, mgd.

c. Contact time, min.

d. Volume of contact tank, gal.

e. Average chlorine requirement, lb/day.

f. Peak chlorine requirement, lb/day.

g. Tank dimensions.

6-31. Example Calculations.

a. Select contact time and calculate volume of contact tank.

$$VCT = \frac{Q_p(CT)10^6}{24(60)}$$

where

VCT = volume of contact tank, gal

Q_p = peak flow, 2.0 mgd

CT = contact time, 15 min

$$VCT = \frac{2.0(15)10^6}{24(60)}$$

$$\underline{VCT = 20{,}833 \text{ gal}}$$

b. Select a side water depth and calculate surface area.

$$SA = \frac{VCT}{7.48(SWD)}$$

where

SA = surface area, ft^2

VCT = volume of contact tank, 20,833 gal

SWD = side water depth, 8 ft

$$SA = \frac{20,833}{7.48(8)}$$

$$\underline{SA = 348\ ft^2}$$

c. Select a length-to-width ratio and calculate dimensions.

$$CTW = \left(\frac{SA}{RLW}\right)^{1/2}$$

$$CTL = \frac{SA}{CTW}$$

where

CTW = contact tank width, ft

SA = surface area, 348 ft^2

RLW = ratio, length to width, 40

CTL = contact tank length, ft

$$CTW = \left(\frac{348}{40}\right)^{1/2}$$

$$\underline{CTW = 2.95 \text{ ft}}$$

$$CTL = \frac{348}{2.95}$$

$$\underline{CTL = 118 \text{ ft}}$$

d. Select chlorine dosage and calculate chlorine requirements.

$$CR = Q_{avg}(CD)8.34$$

where

CR = chlorine requirements, lb/day

Q_{avg} = average flow, 1.0 mgd

CD = chlorine dosage, 8 mg/ℓ

$$CR = 1.0(8)8.34$$

$$\underline{CR = 66.7 \text{ lb/day}}$$

e. Calculate peak chlorine requirements.

$$PCR = CR\left(\frac{Q_p}{Q_{avg}}\right)$$

where

PCR = peak chlorine requirements, lb/day

CR = chlorine requirement, 66.7 lb/day

Q_p = peak flow, 2.0 mgd

Q_{avg} = average flow, 1.0 mgd

$$PCR = 66.7\left(\frac{2.0}{1.0}\right)$$

$$\underline{PCR = 133.4 \text{ lb/day}}$$

6-32. Cost Data. Appropriate cost data and economic evaluation may be found in Chapter 8.

6-33. Bibliography.

a. American Society of Civil Engineers and the Water Pollution Control Federation, "Sewage Treatment Plant Design," Manual of Practice No. 8, 1959, 1961, 1967, 1968, Water Pollution Control Federation, Washington, D. C.

b. American Water Works Association, Water Quality and Treatment, McGraw-Hill, New York, 1971.

c. Great Lakes-Upper Mississippi River Board of State Sanitary Engineers, "Recommended Standards for Sewage Works (Ten States Standards)," 1971, Health Education Service, Albany, New York.

d. Marske, D. M. and Boyle, J. D., "Chlorine Contact Chamber Design - A Field Evaluation," Water and Sewage Works, Vol 120, Jan 1973, pp 70-77.

e. Metcalf and Eddy, Inc., Wastewater Engineering; Collection, Treatment, and Disposal, McGraw-Hill, New York, 1972.

f. Ruben, A. J., "Chemistry of Water Supply Treatment and Distribution," Ann Arbor Science, Ann Arbor, Michigan, 1974.

g. Sawyer, C. N. and McCarty, P. L., Chemistry for Sanitary Engineers, McGraw-Hill, New York, 1967.

h. Smith, R., "Preliminary Design of Wastewater Treatment Systems," Journal, Sanitary Engineering Division, American Society of Civil Engineers, Vol 95, SA1, 1969, pp 117-118.

i. Water Pollution Control Federation, "Chlorination of Sewage and Industrial Wastes," Manual of Practice, No. 4, 1951.

j. Weber, W. J., Jr., Physiochemical Processes for Water Quality Control, Wiley-Interscience, 1972.

Table 6-4. Typical Chlorine Dosages for Disinfection and Odor Control

Effluent from	Dosage Range mg/ℓ
Untreated wastewater (prechlorination)	6 to 25
Primary sedimentation	5 to 20
Chemical precipitation plant	2 to 6
Trickling filter plant	3 to 15
Activated sludge plant	2 to 8
Multimedia filter following activated sludge plant	1 to 5

From Water Pollution Control Federation, 1961

Section VI. ION EXCHANGE

6-34. Background.

a. Ion exchange is the reversible interchange of ions between a solid ion-exchange medium and a solution. Ion exchange has been used extensively in the removal of hardness and iron and manganese from groundwater supplies. In wastewater treatment, ion exchange has been used mainly for the treatment of industrial wastes. Recently, however, ion exchange was evaluated for the removal of nitrogen and phosphorus from municipal wastes.

b. An ion-exchange system usually consists of the exchange resin (cation or anion natural or synthetic), with provisions made for regeneration and rinsing. The most commonly used regenerants include sulfuric acid and caustic soda. Prior to application to the ion-exchange bed, wastewater may be subjected to pretreatment to remove certain contaminants which may hinder the performance of the exchange bed. Common pretreatment requirements are listed in Table 6-5.

6-35. Input Data.

a. Wastewater flow.

(1) Average flow, mgd

(2) Minimum and maximum flows, mgd.

b. Cation and anion concentrations, mg/ℓ.

c. Allowable effluent concentrations, mg/ℓ.

6-36. Design Parameters.

a. Type of resin.

b. Resin exchange capacity, lb/ft^3 (manufacturer's specifications).

c. Regenerant dosage, lb/ft^3 (consult resin manufacturer's specifications).

d. Flow rates.

(1) Treatment flow rate (2-5 gpm/ft^3).

(2) Regenerant flow rate (1-2 gpm/ft^3).

(3) Rinsing flow rate (0.5-1.5 gpm/ft^3).

e. Amount of rinse water (30-120 gal/ft^3).

f. Column depth (24-30 in. minimum).

g. Operation per day, hr.

h. Amount of backwash water, gal/ft^3.

i. Regenerant level, lb/ft^3.

j. Regenerant concentration, percent.

k. Regenerant specific gravity.

l. Backwash water rate, gpm/ft^3.

6-37. Design Procedure.

a. Select an ion-exchange system (consult manufacturer's specifications).

b. Select leakage, regenerant dosage, exchange capacities, and flow rates (consult manufacturer's specifications).

c. Compute service volume and time.

$$SV = \frac{REC}{IRC}$$

where

IRC = (influent concentration - allowable effluent concentration) $\times \frac{0.624(10^{-4})}{7.48}$

SV = service volume, gal/ft^3

REC = resin exchange capacity, lb/ft^3

IRC = ion removal concentration, lb/gal

$$ST = \frac{SV}{SFR}$$

where

ST = service time, min

SV = service volume, gal/ft^3

SFR = service flow rate, gpm/ft^3

d. Compute volume of resins.

$$Vol = \left[\frac{IRC(Q)(10^6)}{REC}\right] \times \left[\frac{ST}{(60)(24)}\right]$$

where

Vol = volume of resin, ft^3

IRC = ion removal concentration, lb/gal

Q = total flow, mgd

REC = resin exchange capacity, lb/ft^3

ST = service time, min

e. Calculate volume of regenerant.

$$V_R = \frac{RL \times Vol \times (100)}{RC(8.34)(\text{specific gravity})}$$

where

V_R = volume of regenerant, gal

RL = regenerant level, lb/ft^3

Vol = volume of resin, ft^3

RC = regenerant concentration, percent

f. Compute rinse requirements.

$$VRW = RW \times Vol$$

where

VRW = volume of rinse water, gal

RW = rinse water, gal/ft^3

Vol = volume of resin, ft^3

g. Compute backwash water requirements.

$$VBW = (BW)(Vol)$$

where

VBW = backwater requirements, gal

BW = backwash water, gal/ft^3

Vol = volume of resin, ft^3

h. Compute exchange cycle time.

$$EC = ST + BT + RT + WT + OMT$$

where

EC = exchange cycle, min

ST = service time, min

BT = backwash time, min

RT = regeneration time, min

WT = rinse time, min

OMT = operation and maintenance time, hr

and

ST = service time, min

$BT = \frac{BW}{BR}$

BW = backwash water, gal/ft^3

BR = rate of backwashing, gpm/ft^3

$RT = \frac{V_R}{RRF} \times \frac{1}{Vol}$

V_R = volume of regenerant

RRF = rate of regenerant flow, gpm/ft^3

Vol = volume of resin, ft^3

$WT = \frac{RW}{RRW}$

VRW = rinse water, gal/ft^3

RRW = rate of rinse water flow, gpm/ft^3

OMT = 0.10(ST + BT + RT + WT)

i. Calculate number of cycles per day.

$$\text{Cycles/day} = \frac{HPD(60)}{EC}$$

where HPD = operation per day, hr

6-38. Output Data.

a. Average waste flow, mgd.

b. Effluent concentration, mg/ℓ.

c. Resin exchange capacity, lb/ft^3.

d. Regenerant level, lb/ft^3.

e. Treatment flow rate, gpm/ft^3.

f. Regenerant flow rate, gpm/ft^3.

g. Rinse flow rate, gpm/ft^3.

h. Backwash flow rate, gpm/ft^3.

i. Volume of regenerant, gal.

j. Volume of rinse water, gal.

k. Volume of backwash water, gal.

l. Volume of resin, ft^3.

m. Service time, min.

n. Exchange cycle, min.

o. Cycles per day.

p. Service volume, gal/ft^3.

q. Backwash water, gal/ft^3.

r. Rinse water, gal/ft^3.

6-39. Example Calculations.

a. Select an ion exchange system from manufacturer's specifications.

b. Select leakage, regenerant dosage, exchange capacities, and flow rates from manufacturer's specifications.

c. Compute service volume and time.

$$SV = \frac{REC}{IRC}$$

where

SV = service volume, gal/ft^3

REC = resin exchange capacity, 4 lb/ft^3

IRC = ion removal concentration = (influent concentration - effluent concentration) $\frac{0.624 \times 10^{-4}}{7.48}$

$$IRC = (200\ mg/\ell - 2\ mg/\ell)\ \frac{0.624 \times 10^{-4}}{7.48}$$

$$\underline{IRC = 1.65 \times 10^{-3}\ lb/gal}$$

$$SV = \frac{4\ lb/ft^3}{1.65 \times 10^{-3}\ lb/gal}$$

$$\underline{SV = 2424\ gal/ft^3}$$

$$ST = \frac{SV}{SFR}$$

where

ST = service time, min

SV = service volume, 2424 gal/ft^3

SFR = service flow rate, 3 gpm/ft^3

$$ST = \frac{2424}{3}$$

$$\underline{ST = 808\ min}$$

d. Compute volume of resins.

$$Vol = \left[\frac{IRC(Q)10^6}{REC}\right] \times \left[\frac{ST}{60(24)}\right]$$

where

Vol = volume of resin, ft^3

IRC = ion removal concentrate, 1.65×10^{-3} lb/gal

Q = average flow, 1.0 mgd

REC = resin exchange capacity, 4 lb/ft^3

ST = service time, 808 min

$$Vol = \left[\frac{(1.65 \times 10^{-3})(1.0)10^6}{4}\right] \times \left[\frac{808}{60(24)}\right]$$

$$\underline{Vol = 231.5\ ft^3}$$

e. Calculate volume of regenerant.

$$V_R = \frac{RL(Vol)100}{RC(8.34)(\text{specific gravity})}$$

where

V_R = volume of regenerant, gal

RL = regenerant level, 7.5 lb/ft^3

Vol = volume of resin, 231.5 ft^3

RC = regenerant concentration, 7.5 percent

specific gravity = specific gravity of regenerant, 1.04

$$V_R = \frac{7.5(231.5)100}{7.5(8.34)1.04}$$

$$\underline{V_R = 2668 \text{ gal}}$$

f. Compute rinse requirement.

$$VRW = RW(Vol)$$

where

VRW = volume of rinse water, gal

RW = rinse water, 60 gal/ft^3

Vol = volume of resin, 231.5 ft^3

$$VRW = 60(231.5)$$

$$\underline{VRW = 13{,}890 \text{ gal}}$$

g. Compute backwash water requirements.

$$VBW = BW(Vol)$$

where

VBW = backwash requirements, gal

BW = backwash water, 100 gal/ft^3

Vol = volume of resin, 231.5 ft^3

$$VBW = 100(231.5)$$

$$\underline{VBW = 23{,}150}$$

h. Compute exchange cycle time.

$$EC = ST + BT + RT + WT + OMT$$

where

EC = exchange cycle, min

ST = service time, 808 min

BT = backwash time = $\frac{BW}{BR} = \frac{10C}{15} = 6.7$ min

RT = regeneration time = $\frac{V_R}{RRF(Vol)} = \frac{2668}{1.5(231.5)} = 7.7$ min

WT = rinse time = $\frac{RW}{RRW} = \frac{60}{1.0} = 60$ min

OMT = 0.10(ST + BT + RT + WT)

$$EC = 808 + 6.7 + 7.7 + 60 + 0.10(808 + 6.7 + 7.7 + 60)$$

$$\underline{EC = 970.64 \text{ min}}$$

i. Calculate number of cycles per day.

$$\text{Cycles/day} = \frac{HPD(60)}{EC}$$

where

HPD = operation per day, 16 hr

EC = exchange cycle time, 970.64 min

$$\text{Cycles/day} = \frac{16(60)}{970.64}$$

$$\underline{\text{Cycles/day} = 0.99}$$

6-40. Cost Data. Appropriate cost data and economic evaluation may be found in Chapter 8.

6-41. Bibliography.

a. Culp, R. L. and Culp, G. L., Advanced Wastewater Treatment, Van Nostrand, New York, 1971.

b. Eckenfelder, W. W., Jr., Industrial Water Pollution Control, McGraw-Hill, New York, 1966.

c. Kunin, R., Ion Exchange Resins, 2d ed., Wiley, New York, 1958.

d. Metcalf and Eddy, Inc., Wastewater Engineering; Collection, Treatment, and Disposal, McGraw-Hill, New York, 1972.

e. Sanks, R. L., "Ion Exchange," Seminar on Process Design for Water Quality Control, 9-13 Nov 1970, Vanderbilt University, Nashville, Tenn.

f. Weber, W. J., Jr., Physiochemical Processes for Water Quality Control, Wiley-Interscience, New York, 1972.

Table 6-5. Common Pretreatment Requirements

Contaminant	Effect	Removal
Suspended solids	Bind resin particles	Coagulation and filtration
Organic	Large molecules foul strong base resins	Carbon absorption or weak base resins only
Oxidants	Slowly oxidize resins	Avoid prechlorination
Iron and manganese	Coat resin particles	Aeration

From Sanks, 1970

Section VII. NEUTRALIZATION

6-42. Background.

a. Neutralization is a unit operation in which pH adjustment of highly acidic or highly alkaline wastewaters takes place. Neutralization of such wastes is necessary prior to:

(1) Biological waste treatment where the optimum pH for bacterial activity (pH 6.5-8.5) must be maintained.

(2) Chemical treatment to provide an optimum pH for the reaction.

(3) Disposal to the receiving streams.

Neutralization is applied mainly to the treatment of industrial wastes.

b. There are many acceptable methods for the neutralization of acidic and alkaline wastes. Acidic wastes may be neutralized by reaction with caustic soda, lime, or by passing the wastewater through a limestone bed. Neutralization through limestone beds may be accomplished through upflow or downflow systems. A maximum hydraulic rate of 1 gpm/ft^2 is recommended for downflow systems to ensure sufficient retention time (para 6-49a). Maximum acid concentration of 0.6 percent H_2SO_4 is suggested to avoid coating the limestone with nonreactive calcium sulfate and to prevent excessive evolution of carbon dioxide, both of which limit complete neutralization. Higher hydraulic rates may be used for upflow beds since the products are swept out before precipitation. However, the disposal of exhausted limestone beds may be a serious drawback to this method of neutralization.

c. Mixing acid wastes with lime slurries is an effective means of neutralization. The reaction is similar to that obtained with limestone beds. Lime is relatively inexpensive and possesses a high neutralizing power. Hydrated lime may produce a problem in handling since it has a tendency to arch or bridge over the outlet in storage bins and has poor flow characteristics. Both caustic soda and sodium carbonate are more powerful than lime, and the reaction products are soluble and do not increase the hardness of the receiving waters.

d. Alkaline wastes can be neutralized with acid (mostly sulfuric or hydrochloric), with flue gas containing 14 percent carbon dioxide, or with bottled carbon dioxide. Carbon dioxide will form carbonic acid when dissolved in water which will neutralize alkaline wastes. The

reaction is slow, but sufficient, if the desired pH is near 7 or 8. The use of acid to neutralize alkaline wastes is fairly common. The reaction rate is almost instantaneous. A titration curve of the alkaline waste neutralized with various amounts of acid is helpful to ascertain the quantities of acid required for neutralization.

e. The selection of a pH control system may prove to be one of the most troublesome tasks facing the design engineer because of the following factors (para 6-49h):

(1) The relation between the amount of reagent and pH is nonlinear.

(2) The input pH can vary rapidly over a range of several decades in a short time.

(3) The flow can change while the pH is changing, and the two are not related.

(4) The pH at neutrality is so sensitive to the addition of reagent that a slight excess can cause large deviations from the setpoint.

(5) Measurement of the pH can be affected by materials which coat the electrodes.

(6) The buffer capacity of the waste has a profound effect on the relation between reagent feed and pH and may not remain constant.

f. Several types of pH control schemes have been applied in waste neutralization systems, including manual control, open loop control, closed loop systems, combined open and closed loop systems, feedback control, and feed forward control.

g. Figure 6-4 shows an acid-waste neutralization system.

6-43. Input Data.

a. Wastewater flow.

(1) Variations in waste flow (maximum and minimum), mgd.

(2) Average daily flow, mgd.

b. pH ranges at various waste flows.

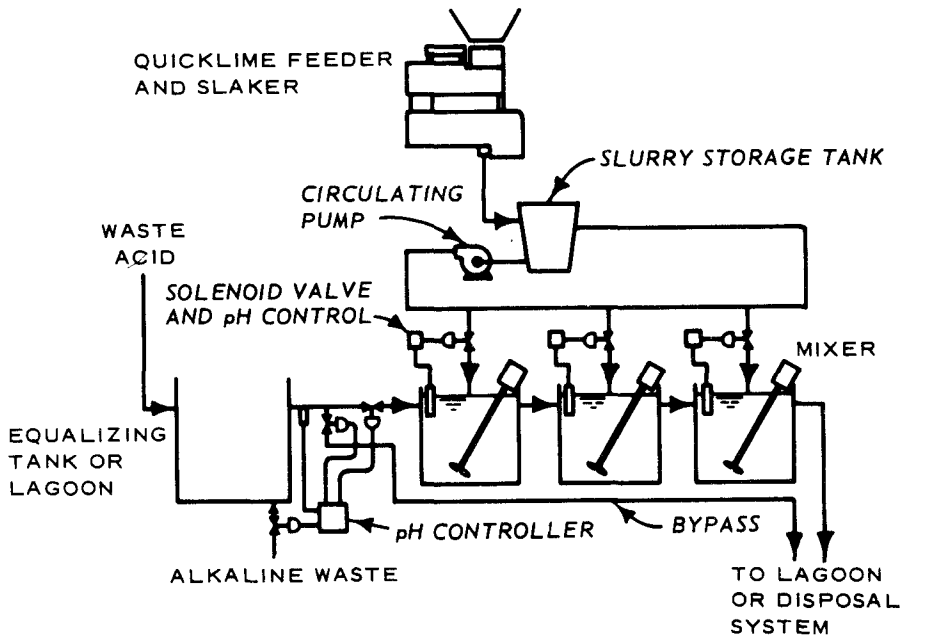

From Eckenfelder, Jr., 1970

Figure 6-4. Schematic of acid-waste neutralization system.

c. Acidity or alkalinity, mg/ℓ.

6-44. Design Parameters.

a. Desired pH level and range.

b. Buffer capacity.

(1) Pound reagent/gallon waste to neutralize to desired pH (from titration curves).

(2) Flow rate, depth, and concentration of feed for limestone neutralization (from laboratory investigation).

c. Residence time (depends on the degree of mixing).

d. Degree of mixing (hp/1000 gal) (manufacturer, 0.2-0.4 hp/1000 gal).

6-45. Design Procedure.

a. Select reagent.

(1) Acid waste (limestone bed or lime slurries or caustic soda).

(2) Alkaline wastes (sulfuric or hydrochloric acids, carbon dioxide gas).

b. For limestone beds, select depth of bed and rate of flow (from laboratory investigation) and calculate surface area.

$$SA = \frac{Q_{avg} \times 10^6}{(24)(60)FR}$$

where

SA = surface area, ft^2

Q_{avg} = average flow, mgd

FR = flow rate, gpm/ft^2

c. Calculate reagent feed using flow data and titration curves.

$$RF = (Q)(R)(10^6)$$

where

RF = reagent feed rate, lb/day

Q = waste flow, mgd

R = buffer capacity, lb reagent/gal waste to neutralize to desired pH

d. Calculate volume of mixing tank.

$$Vol = (Q)(\sigma)\ \frac{(10^6)}{(24)(60)(7.48)}$$

where

Vol = volume of mixing tank, ft^3

Q = waste flow, mgd

σ = mixing time, min (from manufacturer, 5-10 min)

e. Calculate horsepower for mixing:

$$hp = \frac{(HPR)(Vol)(7.48\ gal/ft^3)}{(1000)}$$

where

hp = horsepower

HPR = horsepower for mixing per 1000 gal (0.2-0.4 hp/1000 gal)

Vol = volume of mixing tank, ft^3

f. For feedback control, σ may be calculated by equation proposed by Greer (para 6-49d):

$$\Delta A = \frac{\partial A}{\partial t}\left(t - \sigma + \sigma e - \frac{t}{\sigma}\right)$$

where

ΔA = allowable deviation in acidity or alkalinity from a given set point in the effluent

$\frac{\partial A}{\partial t}$ = maximum rate of acidity or alkalinity change in feed to the unit

t = overall process lag time = reaction time + measurement and transport lag ($\approx$0.5 min)

σ = minimum nominal residence time (time required for perfectly mixed basin to give process controllability)

g. Calculate σ and apply a factor of safety of 2-3.

6-46. Output Data.

a. Buffer capacity, lb/day.

b. Volume of mixing tank, ft^3.

c. Detention time, min.

d. Horsepower.

6-47. Example Calculations. Design of a neutralization system is dependent upon conducting a laboratory investigation; therefore, no design example calculations will be presented in this section.

6-48. Cost Data. Appropriate cost data and economic evaluation may be found in Chapter 8.

6-49. Bibliography.

a. Eckenfelder, W. W., Jr., Water Quality Engineering for Practicing Engineers, Barnes and Nobel, New York, 1970.

b. Eckenfelder, W. W., Jr., and Ford, D. L., Water Pollution Control, Pemberton Press, New York, 1970.

c. Field, W. B., "Design of a pH Control System by Analog Simulation," Instrument Society of American Journal, Vol 6, 1959, pp 42-50.

d. Greer, W. N., The Measurement and Control of pH, Leeds and Northrup, Philadelphia, 1966.

e. Hoak, R. D., "Acid Iron Wastes Neutralization," Sewage and Industrial Wastes, Vol 22, No. 2, 1950, pp 212-221.

f. Nemerow, N. L., Liquid Waste of Industry, Addison-Wesley, Reading, Mass., 1971.

g. Shinskey, F. G., "Feed Forward Control of pH," Instrumentation Technology, Vol 15, 1968.

h. Wallace, A. T., "Neutralization and pH Control," 1st Short Course on Design of Wastewater Treatment, 1970, Vanderbilt University, Nashville, Tenn.

Section VIII. RECARBONATION

6-50. Background.

a. Recarbonation is a unit process that has long been used in lime-softening water treatment plants. In water treatment, recarbonation is usually practiced ahead of the filters to prevent calcium carbonate deposition on the grains which will result in shortening of the filter runs. Recarbonation is also used to lower the pH of the lime-treated water to the point of calcium carbonate stability to avoid deposition of calcium carbonate in pipelines.

b. More recently, with the increased use of lime treatment of wastewaters, recarbonation has been more widely used in wastewater treatment. Recarbonation, in wastewater treatment, is mainly used to adjust the pH following lime treatment for such applications as phosphorus removal, ammonia stripping, or chemical clarification.

c. Recarbonation may be practiced as either a two-stage or a single-stage system. Two-stage recarbonation consists of two separate treatment steps. In the first stage, sufficient carbon dioxide is added in the primary recarbonation stage to lower the pH of the wastewater to pH = 9.3, which is near the minimum solubility of calcium carbonate. The sludge produced, which is mainly calcium carbonate, is then removed through settling and recalcined if recovery of the lime is desired. The time required to complete the reaction is normally 15-30 min. In the second stage, carbon dioxide is added to lower the pH to a value of pH = 7. It is possible, however, to add sufficient carbon dioxide to lower the pH from 11 to 7 in a single stage. Single-stage recarbonation eliminates the need for an intermediate settling basin which is needed in the two-stage system. However, single-stage recarbonation normally results in an increase in the calcium hardness of the water.

d. The reactions involved in the recarbonation process may be simplified as follows:

$$Ca(OH)_2 + CO_2 \rightarrow CaCO_3 + H_2O$$

$$CaCO_3 + CO_2 + H_2O \rightarrow Ca(HCO_3)_2$$

e. The amount of CO_2 needed to complete the reactions, as calculated from the equations above is as follows:

Calcium hydroxide to calcium carbonate

CO_2 (lb/million gal) = 3.7 (OH^- alkalinity in mg/ℓ as $CaCO_3$)

Calcium carbonate to calcium bicarbonate

CO_2 (lb/million gal) = 3.7 ($CO_3^=$ alkalinity in mg/ℓ as $CaCO_3$).

6-51. Input Data.

a. Wastewater flow.

(1) Average flow.

(2) Peak flow.

b. Wastewater characteristics.

(1) Alkalinity.

(2) Hydroxide alkalinity, mg/ℓ as $CaCO_3$.

(3) Carbonate alkalinity, mg/ℓ as $CaCO_3$.

c. pH.

6-52. Design Parameters.

a. Contact time, min (15-30).

b. Carbon dioxide dose, lb/million gal.

c. Desired effluent pH.

6-53. Design Procedure.

a. Two-stage.

(1) Primary stage to pH = 9.3.

(a) Calculate tank volume, $V = \frac{Q(t)10^6}{60(24)}$

where

V = tank volume, gal

Q = wastewater flow, mgd

t = contact time, min (15-30)

(b) Calculate CO_2 requirement.

$$CO_2 = (3.7)(OH^-(Q)/0.116/1440)$$

where

CO_2 = carbon dioxide requirement, cfm/mgd

3.7 = stochiometric value to convert hydroxide to carbonate

OH^- = hydroxide alkalinity, in mg/ℓ as $CaCO_3$

Q = wastewater flow, mgd

0.116 = density of CO_2, lb/ft^3

1440 = min/day

(2) Secondary stage to pH = 7.

(a) Calculate tank volume, $V = \frac{Q(t)10^6}{24(60)}$

where

V = volume, gal

Q = wastewater flow, mgd

t = contact time, min (15-30 min)

(b) Calculate CO_2 requirement.

$$CO_2 = 3.7(CO_3^= + OH^-)(Q)/0.116/1440$$

where

$CO_3^{=}$ = carbonate alkalinity, mg/ℓ as $CaCO_3$

OH^- = hydroxide alkalinity, mg/ℓ as $CaCO_3$

Q = wastewater flow, mgd

b. Single-stage recarbonation to pH = 7.

(1) Calculate volume of tank.

$$V = (Q)(t)/60/1440$$

where

V = volume, million gal

t = contact time, min (5-30 min)

(2) Calculate CO_2 requirements.

$$CO_2(\text{cfm/mgd}) = 7.4(OH^-) + 3.7\ (CO_3^{=})(Q)/0.116/1440$$

where

OH^- = hydroxide alkalinity, mg/ℓ as $CaCO_3$

$CO_3^{=}$ = carbonate alkalinity, mg/ℓ as $CaCO_3$

6-54. Output Data.

a. Volume of tank, million gal.

b. Carbon dioxide requirement, cfm/mgd.

c. Final pH.

d. Contact time, min.

6-55. Example Calculations.

a. Two-stage.

(1) Adjust primary stage to pH = 9.3.

(a) Calculate tank volume.

$$V = \frac{Q(t)10^6}{60(24)}$$

where

V = volume of tank, million gal

Q = average flow, 1.0 mgd

t = detention time, 15 min

$$V = \frac{(1.0)15(10)^6}{60(24)}$$

$$\underline{V = 10{,}416 \text{ gal}}$$

(b) Calculate CO_2 requirement.

$$CO_2 = \frac{3.7(OH^-)Q}{0.116(1440)}$$

where

CO_2 = carbon dioxide requirement, cfm/mgd

3.7 = stochiometric value to convert hydroxide to carbonate

OH^- = hydroxide alkalinity, 50 mg/ℓ

Q = average flow, 1.0 mgd

0.116 = density of CO_2, lb/ft^3

1440 = minutes per day

$$CO_2 = \frac{3.7(50)(1.0)}{0.116(1440)}$$

$$\underline{CO_2 = 1.1 \text{ cfm/mgd}}$$

(2) Adjust secondary stage to pH = 7.

(a) Calculate tank volume.

$$V = \frac{Q(t)10^6}{24(60)}$$

where

V = volume of tank, gal

Q = average flow, 1.0 mgd

t = detention time, 15 min

$$V = \frac{1.0(15)10^6}{24(60)}$$

$$\underline{V = 10{,}416 \text{ gal}}$$

(b) Calculate CO_2 requirement.

$$CO_2 = \frac{3.7(CO_3^{=} + OH^-)Q}{0.116(1440)}$$

where

CO_2 = carbon dioxide requirement, cfm/mgd

3.7 = stochiometric value to convert $CO_3^{=}$ or OH^- to carbonate

$CO_3^{=}$ = carbonate alkalinity, 150 mg/ℓ

OH^- = hydroxide alkalinity, 50 mg/ℓ

Q = average flow, 1.0 mgd

$$CO_2 = \frac{3.7(150 + 50)1.0}{0.116(1440)}$$

$$\underline{CO_2 = 4.4 \text{ cfm/mgd}}$$

6-56. Cost Data. Appropriate cost data and economic evaluation may be found in Chapter 8.

6-57. Bibliography.

a. American Water Works Association, "Water Quality and Treatment," 3rd edition, McGraw-Hill Book Co., 1971.

b. Culp, R. L. and Culp, G. L., "Advanced Wastewater Treatment," Van Nostrand Reinhold Company, 1971

c. Sawyer, C. N. and McCarty, P. L., "Chemistry for Sanitary Engineers," McGraw-Hill Book Company, 2nd edition, 1967.

(next page is 6-69)

Section IX. TWO-STAGE LIME TREATMENT

6-58. Background.

a. Two-stage treatment systems are used for phosphorus removal from wastewaters. In principle, for a two-stage system, sufficient lime is added to the wastewater in the first stage to raise the pH to above 11. At this pH precipitation of hydroxy-apatite, calcium carbonate, and magnesium hydroxide takes place. Carbon dioxide is then added following the first-stage clarifier to reduce the pH to a value of 9.5-10, where calcium carbonate precipitation results. The sludge, which is mainly $CaCO_3$, is then separated in a clarifier and the pH of the wastewater is adjusted to around 7 for further treatment or final disposal. A flow diagram of a two-stage lime treatment system is presented in Figure 6-5.

b. The design of a two-stage lime treatment system will be a combination of (1) chemical coagulation-precipation basin using lime as a coagulate; (2) a primary recarbonation stage; (3) a clarifier designed as a primary clarifier; and (4) a secondary recarbonation stage.

6-59. Chemical Coagulation.

a. Input data.

(1) Wastewater flow, mgd.

(a) Average daily flow, mgd.

(b) Variation in flow, mgd.

(2) Wastewater characteristics.

(a) BOD, total and soluble, mg/ℓ.

(b) COD, total and soluble, mg/ℓ.

(c) Phosphorus, mg/ℓ.

(d) Suspended solids, mg/ℓ.

(e) pH.

(f) Alkalinity, mg/ℓ.

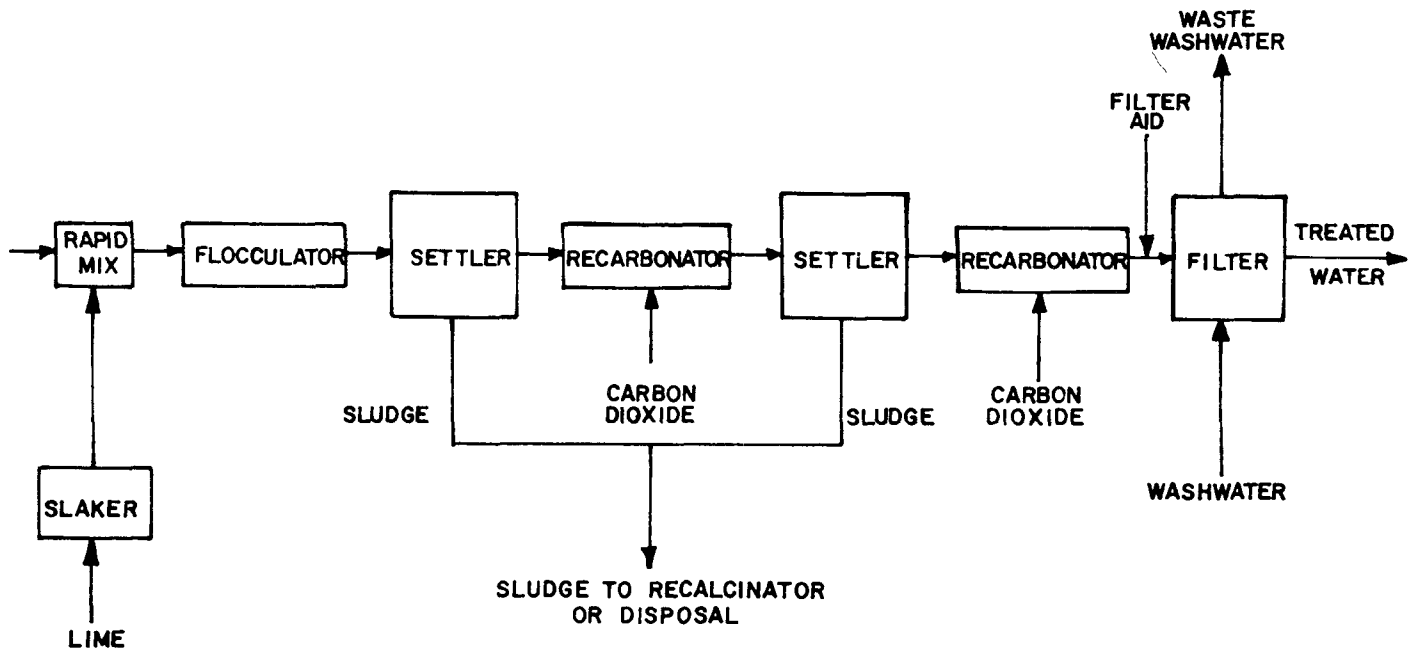

Figure 6-5. Two-stage lime treatment system.

b. Design parameters.

(1) Desired quality of treated effluent, mg/ℓ.

(2) Coagulant dosage, mg/ℓ (jar test).

(3) Detention time of rapid mix basin (1-3 min).

(4) Detention time of flocculator basin (15-60 min).

c. Design procedure.

(1) Calculate coagulant requirements.

$$CR = (CD)(Q_{avg})(8.34)$$

where

CR = coagulant requirements, lb/day

CD = coagulant dosage, mg/ℓ

Q_{avg} = average daily flow, mgd

(2) Calculate volume of flash mixing basin.

$$VFM = \frac{(Q_p)(DTFM)(10^6)}{1440}$$

where

VFM = volume of flash mix basin, gal

Q_p = peak flow, mgd

DTFM = detention time of flash mixer, min (1-3 min)

(3) Calculate volume of flocculator basin.

$$VFL = \frac{(Q_p)(DTFL)(10^6)}{1440}$$

where

VFL = volume of flocculator basin, gal

Q_p = peak flow, mgd

DTFL = detention time of flocculator basin, min (15-60 min)

6-60. Primary Clarifier.

a. Input data.

(1) Wastewater flow.

(a) Average flow, mgd.

(b) Peak flow, mgd.

(2) Wastewater characteristics.

(a) Suspended solids, mg/ℓ.

(b) Volatile suspended solids, percent.

b. Design parameters.

(1) Overflow rate, gpd/ft^2. (Tables 6-6 and 6-7.)

(2) Detention time, hr. (Table 6-7.)

(3) Specific gravity of sludge. (Table 6-8.)

(4) Solids content of underflow, percent (4 to 6 percent).

(5) Removal efficiency of suspended solids, percent. (Fig. 6-6.)

(6) Weir loading, gpd/ft (10,000 to 15,000 gpd/ft).

c. Design procedure.

(1) Select an overflow rate by using Table 6-6 or by laboratory methods and calculate surface area:

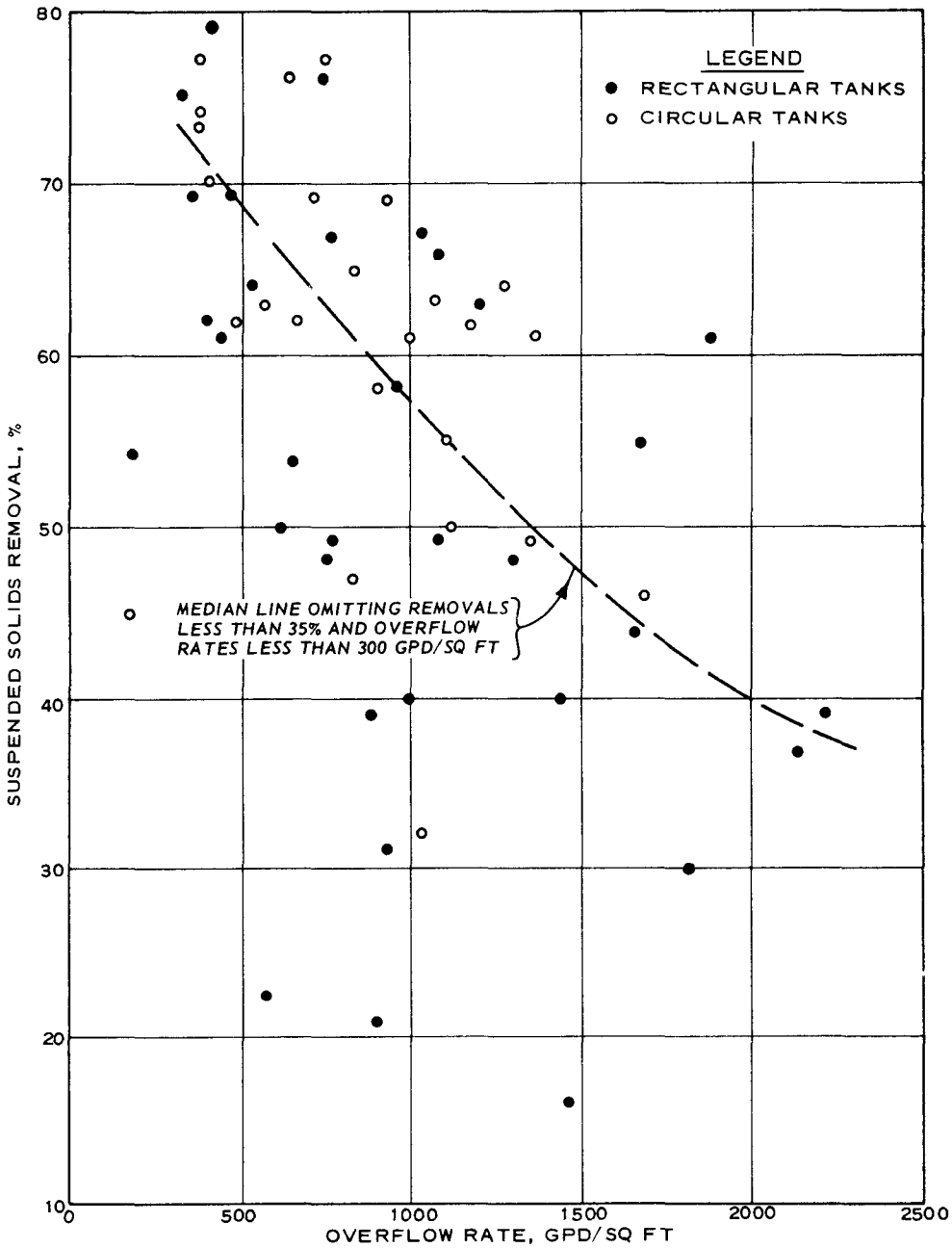

Figure 6-6. Suspended solids removal versus overflow rate for secondary clarifiers.

$$SA = \frac{Q_p \times 10^6}{OFR}$$

where

SA = surface area, ft^2

Q_p = peak flow, mgd

OFR = overflow rate, $gal/ft^2/day$

(2) Select detention time and calculate volume (Table 6-7):

$$V = (Q_{avg})(t) \times \frac{1}{7.48} \times \frac{1}{24} \times 10^6$$

where

V = volume of tank, ft^3

Q_{avg} = average flow, mgd

t = time, hr

(3) Calculate side water depth:

$$SWD = \frac{V}{SA}$$

where

SWD = side water depth, ft

V = volume, ft^3

SA = surface area, ft^2

(4) Check solids loading rate:

$$SLR = \frac{(Q_{avg})(SSI)(8.34)}{(SA)}$$

where

SLR = solids loading rate, $lb/ft^2/day$

Q_{avg} = average flow, mgd

SSI = influent solids concentration, mg/ℓ

SA = surface area, ft^2

(5) Select weir loading rate and calculate weir length:

$$WL = \frac{Q_p}{WLR} \times 10^6$$

where

WL = weir length, ft

Q_p = peak flow, mgd

WLR = weir loading rate, gal/ft/day

(6) Determine percentage of suspended solids removed from Figure 6-6.

(7) Calculate amount of primary sludge produced.

$$PSP = (Q_{avg})(SSI)(SSR)(10^{-2})(8.34)$$

where

PSP = primary sludge produced, lb/day

Q_{avg} = average flow, mgd

SSI = influent solids concentration, mg/ℓ (50 to 60 percent for municipal systems)

SSR = suspended solids removed, percent

(8) Select underflow concentration (3 to 6 percent) and sludge specific gravity (Table 6-8), and calculate the volume flow of primary sludge produced:

$$VPSP = \frac{PSP(100)}{(\text{specific gravity})(UC)(8.34)}$$

where

VPSP = volume flow of primary sludge produced, gal/day

PSP = primary sludge produced, gal/day

UC = underflow concentration (3 to 6 percent)

6-61. Recarbonation.

a. Input data.

(1) Wastewater flow.

(a) Average flow.

(b) Peak flow.

(2) Wastewater characteristics.

(a) Alkalinity.

(b) Hydroxide alkalinity, mg/ℓ as $CaCO_3$.

(c) Carbonate alkalinity, mg/ℓ as $CaCO_3$.

(3) pH.

b. Design parameters.

(1) Contact time, min (15-30).

(2) Carbon dioxide dose, lb/million gal.

(3) Desired effluent pH.

c. Design procedure for two-stage.

(1) Primary stage to pH = 9.3

(a) Calculate tank volume.

$$V = \frac{Q(t)10^6}{24(60)}$$

where

V = tank volume, gal

Q = wastewater flow, mgd

t = contact time, min (15-30)

(b) Calculate CO_2 requirement.

$$CO_2 = (3.7)(OH^-)(Q)/0.116/1440$$

where

3.7 = stochiometric value to convert hydroxide to carbonate

OH^- = hydroxide alkalinity, mg/ℓ as $CaCO_3$

Q = wastewater flow, mgd

0.116 = density of CO_2, lb/ft^3

1440 = min/day

(2) Secondary stage to pH = 7.

(a) Calculate tank volume.

$$V = \frac{Q(t)10^6}{24(60)}$$

where

V = volume, gal

Q = wastewater flow, mgd

t = contact time, min (15-30 min)

(b) Calculate CO_2 requirement.

$$CO_2 = 3.7(CO_3^{=} + OH^{-})(Q)/0.116/1440$$

6-62. Primary Clarifier.

a. Input data.

(1) Wastewater flow.

(a) Average flow, mgd.

(b) Peak hourly flow, mgd.

(2) Suspended solids, mg/ℓ.

(3) Volatile suspended solids, percent.

b. Design parameters.

(1) Overflow rate, gpd/ft^2. (Tables 6-6 and 6-7.)

(2) Detention time, hr. (Table 6-7.)

(3) Specific gravity of sludge. (Table 6-8.)

(4) Solids content of underflow, percent (4 to 6 percent).

(5) Removal efficiency of suspended solids, percent. (Fig. 6-6.)

(6) Weir loading, gpd/ft (10,000 to 15,000 gpd/ft).

c. Design procedure.

(1) Select an overflow rate by using Table 6-6 or by laboratory methods and calculate surface area.

$$SA = \frac{Q_p \times 10^6}{OFR}$$

where

SA = surface area, ft^2

Q_p = peak flow, mgd

OFR = overflow rate, $gal/ft^2/day$

(2) Select detention time and calculate volume (Table 6-7).

$$V = (Q_{avg})(t) \times \frac{1}{7.48} \times \frac{1}{24} \times 10^6$$

where

V = volume of tank, ft^3

Q_{avg} = average flow, mgd

t = time, hr

(3) Calculate side water depth.

$$SWD = \frac{V}{SA}$$

where

SWD = side water depth, ft

V = volume, ft^3

SA = surface area, ft^2

(4) Check solid loading rate.

$$SLR = \frac{(Q_{avg})(SSI)(8.34)}{(SA)}$$

where

SLR = solid loading rate, $lb/ft^2/day$

Q_{avg} = average flow, mgd

SSI = influent solids concentration, mg/ℓ

SA = surface area, ft^2

(5) Select weir loading rate and calculate weir length.

$$WL = \frac{Q_p}{WLR} \times 10^6$$

where

WL = weir length, ft

Q_p = peak flow, mgd

WLR = weir loading rate, gal/ft/day

(6) Determine percentage of suspended solids removed from Table 6-6.

(7) Calculate amount of primary sludge produced.

$$PSP = (Q_{avg})(SSI)(SSR)(10^{-2})(8.34)$$

where

PSP = primary sludge produced, lb/day

Q_{avg} = average flow, mgd

SSI = influent solids concentration, mg/ℓ (50 to 60 percent for municipal systems)

SSR = suspended solids removed, percent

(8) Select underflow concentration (3 to 6 percent) and sludge specific gravity (Table 6-8), and calculate the volume flow of primary sludge produced.

$$VPSP = \frac{PSP(100)}{(\text{specific gravity})(UC)(8.34)}$$

where

VPSP = volume flow of primary sludge produced, gal/day

PSP = primary sludge produced, gal/day

UC = underflow concentration (3 to 6 percent)

6-63. Output Data.

a. Coagulation process.

(1) Coagulant dosage, mg/ℓ.

(2) Optimum pH.

(3) Rapid mix detention time, min.

(4) Flocculator detention time, min.

(5) Coagulant requirement, lb/day.

(6) Volume of flash mix basin, gal.

(7) Volume of flocculator basin, gal.

b. Clarifier.

(1) Overflow rate, gal/day ft^2.

(2) Surface area, ft^2.

(3) Side water depth, ft.

(4) Detention time, hr.

(5) Solid loading, lb/ft^2/day.

(6) Weir loading, gal/ft/day.

(7) Weir length, ft.

(8) Volume of sludge produced, gal/day.

(9) Suspended solids removal, percent.

c. Recarbonation unit.

(1) Volume of tank, million gal.

(2) Carbon dioxide requirement, cfm/mgd.

(3) Final pH.

(4) Contact time, min.

d. Clarifier.

(1) Overflow rate, gal/day ft^2.

(2) Surface area, ft^2.

(3) Side water depth, ft.

(4) Detention time, hr.

(5) Solid loading, lb/ft^2/day.

(6) Weir loading, gal/ft/day.

(7) Weir length, ft.

(8) Volume of sludge produced, gal/day.

(9) Suspended solids removal, percent.

e. Recarbonation unit.

(1) Volume of tank, million gal.

(2) Carbon dioxide requirement, cfm/mgd.

(3) Final pH.

(4) Contact time, min.

6-64. Example Calculations.

a. Chemical coagulation.

(1) Calculate coagulant requirements.

$$CR = CD(Q_{avg})8.34$$

where

CR = coagulant requirements, lb/day

CD = coagulant dosage, 100 mg/ℓ

Q_{avg} = average flow, 1.0 mgd

$$CR = 100(1.0)8.34$$

$$\underline{CR = 834 \text{ lb/day}}$$

(2) Calculate volume of flash mixing basin.

$$VFM = \frac{Q_p(DTFM)10^6}{1440}$$

where

VFM = volume of flash mixing tank, gal

Q_p = peak flow, 2.0 mgd

DTFM = detention time flash mixing tank, 5 min

1440 = min per day

$$VFM = \frac{2.0(5)10^6}{1440}$$

$$\underline{VFM = 6944 \text{ gal}}$$

(3) Calculate volume of flocculator basin.

$$VFL = \frac{Q_p(DTFL)10^6}{1440}$$

where

VFL = volume of flocculator basin, gal

Q_p = peak flow, 2.0 mgd

DTFL = detention time flocculator basin, 30 min

$$VFL = \frac{2.0(30)10^6}{1440}$$

$$\underline{VFL = 41{,}667 \text{ gal}}$$

b. Primary clarifier.

(1) Select an overflow rate and calculate surface area.

$$SA = \frac{Q_p \times 10^6}{OFR}$$

where

SA = surface area, ft^2

Q_p = peak flow, 2.0 mgd

OFR = overflow rate, 600 gpd/ft^2

$$SA = \frac{2.0 \times 10^6}{600}$$

$$\underline{SA = 3333\ ft^2}$$

(2) Select detention time and calculate volume.

$$V = \frac{Q_{avg}(t)10^6}{7.48(24)}$$

where

V = volume, ft^3

Q_{avg} = average flow, 1.0 mgd

t = detention time, 3 hr

$$V = \frac{1.0(3)10^6}{7.48(24)}$$

$$\underline{V = 16{,}711\ ft^2}$$

(3) Calculate side water depth.

$$SWD = \frac{V}{SA}$$

where

SWD = side water depth, ft

V = volume, 16,711 ft^3

SA = surface area, 3,333 ft^2

$$SWD = \frac{16,711}{3,333}$$

$$\underline{SWD = 5.0 \text{ ft}}$$

(4) Check solids loading rate.

$$SLR = \frac{Q_{avg}(SSI)8.34}{SA}$$

where

SLR = solids loading rate, $lb/ft^2/day$

Q_{avg} = average flow, 1.0 mgd

SSI = influent suspended solids, 200 mg/ℓ

SA = surface area, 3333 ft^2

$$SLR = \frac{1.0(200)8.34}{3333}$$

$$\underline{SLR = 0.5 \text{ lb/ft}^2\text{day}}$$

(5) Select weir loading rate and calculate weir length.

$$WL = \frac{Q_p}{WLR} \times 10^6$$

where

WL = weir length, ft

Q_p = peak flow, 2.0 mgd

WLR = weir loading rate, 15,000 gpd/ft^2

$$WL = \frac{2.0(10^6)}{15,000}$$

$$\underline{WL = 133 \text{ ft}}$$

(6) Determine percentage of suspended solids removal. Percentage suspended solids removed = 65 percent.

(7) Calculate amount of primary sludge produced.

$$PSP = Q_{avg}(SSI)SSR(10^{-2})8.34$$

where

PSP = primary sludge produced, lb/day

Q_{avg} = average flow, 1.0 mgd

SSI = influent suspended solids, 200 mg/ℓ

SSR = suspended solids removed, 68 percent

$$PSP = 1.0(200)(68)10^{-2}(8.34)$$

$$\underline{PSP = 1134 \text{ lb/day}}$$

(8) Select underflow concentration and sludge specific gravity and calculate the volume of primary sludge produced.

$$VPSP = \frac{PSP(100)}{\text{specific gravity}(UC)8.34}$$

where

VPSP = volume of primary sludge produced, gal/day

PSP = primary sludge produced, 1134 lb/day

specific gravity = 1.04

UC = underflow concentration, 4 percent

$$VPSP = \frac{1134(100)}{1.04(4)8.34}$$

$$\underline{VPSP = 3268 \text{ gpd}}$$

c. Recarbonation.

(1) Primary stage pH = 9.3.

(a) Calculate tank volume.

$$V = \frac{Q(t)10^6}{24(60)}$$

where

V = volume, gal

Q = average flow, 1.0 mgd

t = detention time, 15 min

$$V = \frac{1.0(15)10^6}{24(60)}$$

$$\underline{V = 10{,}417 \text{ gal}}$$

(b) Calculate CO_2 requirement.

$$CO_2 = \frac{3.7(OH^-)Q}{0.116(1440)}$$

where

CO_2 = carbon dioxide requirement, cfm/mgd

3.7 = conversion factor, by dioxide to carbonate

OH^- = hydroxide alkalinity, 50 mg/ℓ

Q = average flow, 1.0 mgd

0.116 = density of CO_2, lb/ft^3

$$CO_2 = \frac{3.7(50)1.0}{0.116(1440)}$$

$$\underline{CO_2 = 1.1 \text{ cfm/mgd}}$$

(2) Secondary stage to pH = 7.

(a) Calculate tank volume.

$$V = \frac{Q(t)10^6}{24(60)}$$

where

V = volume of tank, gal

Q = average flow, 1.0 mgd

t = detention time, 15 min

$$V = \frac{1.0(15)10^6}{24(60)}$$

$$\underline{V = 10{,}417 \text{ gal}}$$

(b) Calculate CO_2 requirement.

$$CO_2 = \frac{3.7(CO_3^{=} + OH^-)Q}{0.116(1440)}$$

where

CO_2 = carbon dioxide requirement, cfm/mgd

3.7 = stochiometric conversion factor $CO_3^{=}$ and OH^- to carbonate

$CO_3^{=}$ = carbonate alkalinity, 150 mg/ℓ

OH^- = hydroxide alkalinity, 50 mg/ℓ

Q = average flow, 1.0 mgd

0.116 = density of CO_2, lb/ft^3

$$CO_2 = \frac{3.7(150 + 50)1.0}{0.116(1440)}$$

$$\underline{CO_2 = 4.4 \text{ cfm/mgd}}$$

d. Primary clarifier. The primary clarifier for use after recarbonation is designed in the same manner as the clarifier for use after the coagulation chamber.

6-65. Cost Data. Appropriate cost data and economic evaluation may be found in Chapter 8.

6-66. Bibliography. A bibliography for each unit process needed in two-stage lime treatment is presented at the end of each of those sections; namely, chemical coagulation, primary clarification, and recarbonation.

Table 6-6. Recommended Surface-Loading Rates for Various Suspensions

Suspension	Loading Rate, gpd/ft^2 Range	Peak Flow
Untreated wastewater	600 to 1200	1200
Alum floc[a]	360 to 600	600
Iron floc[a]	540 to 800	800
Lime floc[a]	540 to 1200	1200

(From Metcalf and Eddy, Inc., 1971)

[a] Mixed with the settleable suspended solids in the untreated wastewater and colloidal or other suspended solids swept out by the floc.

Table 6-7. Detention Times for Various Surface-Loading Rates and Tank Depths

Surface-Loading Rate, gpd/ft^2	Detention Time, hr 7-ft Depth	8-ft Depth	10-ft Depth	12-ft Depth
400	3.2	3.6	4.5	5.4
600	2.1	2.4	3.0	3.6
800	1.6	1.8	2.25	2.7
1000	1.25	1.4	1.8	2.2

(From Metcalf and Eddy, Inc., 1971)

Table 6-8. Specific Gravity of Raw Sludge Produced from Various Types of Sewage

Type of Sewerage System	Strength of Sewage	Specific Gravity
Sanitary	Weak	1.02
Sanitary	Medium	1.03
Combined	Medium	1.05
Combined	Strong	1.07

(From Metcalf and Eddy, Inc., 1971)

CHAPTER 7

BIOLOGICAL UNIT PROCESSES

Section I. INTRODUCTION

7-1. Definition. Processes that employ biokinetic or biochemical reactions as a principal means of treatment fall into the category "biological unit processes." The following biological unit processes are described in this section.

a. Trickling filters.

b. Plug flow activated sludge.

c. Complete mix activated sludge.

d. Step aeration activated sludge.

e. Extended aeration activated sludge.

f. Modified or high-rate aeration activated sludge.

g. Contact stabilization activated sludge.

h. Pure oxygen activated sludge.

i. Aerated aerobic lagoons.

j. Aerated facultative lagoons.

k. Oxidation ditch.

l. Nitrification-denitrification.

m. Aerobic digestion.

n. Anaerobic digestion.

o. Stabilization ponds.

(1) Aerobic.

(2) Anaerobic.

(3) Facultative.

(next page is 7-3)

Section II. TRICKLING FILTERS

7-2. Background.

a. Trickling filters were one of the earliest forms of wastewater treatment used in the United States. They are classified as low- or high-rate filters, depending on the hydraulic loading (1-4 mgad for low, 10-40 mgad for high). In the trickling filtration process wastewater is distributed uniformly over the filter media by a flow distributor. The majority of such units use a reaction drive rotary distributor. A large portion of the wastewater rapidly passes through the filter; the remainder slowly trickles over the slime layer formed on the filter surface. BOD removal is achieved by biosorption and coagulation from the rapidly moving portion of the flow and by progressive removal of soluble constituents from the more slowly moving portion of the flow.

b. The quantity of biological slime produced is controlled by the available food; the growth will increase as the organic load increases until a maximum effective thickness is reached. The maximum growth is controlled by physical factors including hydraulic dosage rate, type of media, type of organic matter, amount of essential nutrients present, oxygen transfer, and nature of the particular biological growth (para 7-9r). The microbiology of trickling filters can be found in the bibliography (para 7-9k, p, and r). Various recirculation systems used with trickling filters are shown in Figure 7-1.

c. The use of recently developed synthetic media has increased the popularity as well as the capability of trickling filters in domestic wastewater treatment. The granite stone medium is rarely used in modern sewage treatment systems due to its higher capital costs (compared with synthetic media) and other limitations such as growth of filter flies, odor, and ponding problems (para 7-9c and o). Thus only the synthetic medium filter tower will be designed here.

7-3. Input Data.

a. Wastewater flow.

(1) Average daily flow, mgd.

(2) Peak hourly flow, mgd.

b. Influent BOD, mg/ℓ

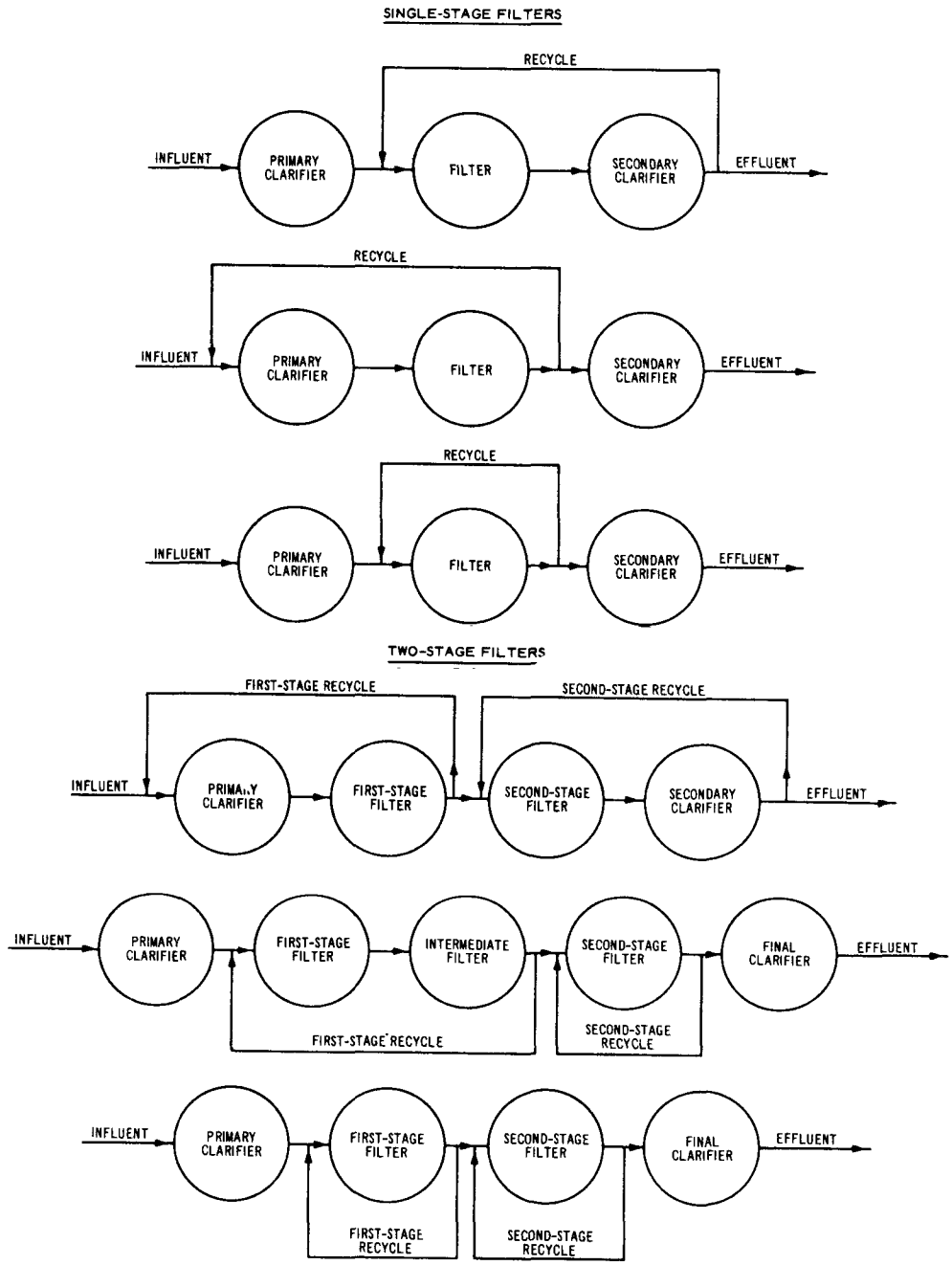

From Clark and Viesmann, 1966

Figure 7-1. Various systems of recirculation used with trickling filters.

c. Desired effluent BOD, mg/ℓ.

d. Temperature, °C.

e. Recirculation ratio.

7-4. Design Parameters.

a. Reaction rate constant, k (0.0015-0.003) (from laboratory).

b. Specific surface area of the media, ft^2/ft^3, from manufacturer = A_p (9-35).

c. Media factor = n (from laboratory).

d. Hydraulic loading, gpm/ft^2 = Q_o (from laboratory).

e. Sludge production factor = PF (0.42-0.65) lb solids/lb BOD_5.

7-5. Design Procedures.

a. Calculate the desired depth of the filter.

$$D = -\frac{\left(Q_o^n\right) \ln \left[\frac{S + S(R)}{S_o + S(R)}\right]}{K(A_p)}$$

where

D = depth of filter, ft

Q_o = hydraulic loading, gpm/ft^2

n = media factor

S = desired effluent BOD_5, mg/ℓ

R = recirculation ratio = Q_r/Q

S_o = influent BOD_5, mg/ℓ

K = reaction rate constant

A_p = specific surface area of the media, ft^2/ft^3

Height must be checked against $D < 30$ ft. If $D \geq 30$ ft, select a lower hydraulic loading (Q_o) and recalculate D.

b. Calculate the surface area of the filter.

$$SA = \frac{Q_{avg}(1440)}{Q_o}$$

where

SA = surface area, ft^2

Q_{avg} = average daily flow, mgd

Q_o = hydraulic loading, gpm/ft^2

1440 = min per day

c. Calculate the filter media volume.

$$V = SA(D)$$

where

V = volume of media, ft^3

SA = surface area, ft^2

D = filter depth, ft

d. Calculate sludge production.

$$SP = Q_{avg}(S_o)PF(8.34)$$

where

SP = sludge produced, lb/day

Q_{avg} = average daily flow, mgd

S_o = influent BOD_5, mg/ℓ

PF = sludge production factor, lb solids/lb BOD_5

7-6. Output Data.

a. Depth of filter, ft.

b. Surface area of filter, ft^2.

c. Volume of filter, ft^3.

d. Hydraulic loading, gpm/ft^2.

e. Recirculation ratio.

f. Sludge production, lb/day.

7-7. Example Calculations.

a. Calculate desired depth of the filter.

$$D = -\frac{\left(Q_o\right)^n \ln\left[\frac{S + S(R)}{S_o + S(R)}\right]}{KA_p}$$

where

D = depth of filter, ft

Q_o = hydraulic loading to filter, 1.0 gpm/ft^2

n = 0.5

S = 15 mg/ℓ

S_o = 200 mg/ℓ

R = recirculation ratio, 100 percent, 1.0

K = reaction rate, 0.0022 ft/min

A_p = specific surface area, 30 ft^2/ft^3

$$D = -\frac{(1.0)^{0.5} \ln\left[\frac{15 + 15(1.0)}{200 + 15(1.0)}\right]}{0.0022(30)}$$

$$\underline{D = 29.8 \text{ ft, say } 30 \text{ ft}}$$

b. Calculate surface area of filter.

$$SA = \frac{Q_{avg}(1440)}{Q_o}$$

where

SA = surface area, ft^2

Q_{avg} = average flow, 1.0 mgd

Q_o = hydraulic loading, 1.0 gpm/ft^2

$$SA = \frac{1.0(1440)}{1.0}$$

$$\underline{SA = 1440 \text{ ft}^2}$$

c. Calculate volume.

$$V = SA(D)$$

where

V = volume of filter, ft^3

SA = surface area, 1440 ft^2

D = depth, 30 ft

$$V = 1440(30)$$

$$\underline{V = 43{,}200 \text{ ft}^3}$$

d. Calculate sludge produced.

$$SP = Q_{avg}(S_o)PF(8.34)$$

where

SP = sludge produced, lb/day

Q_{avg} = average flow, 1.0 mgd

S_o = influent BOD_5, 200 mg/ℓ

PF = sludge production factor, 0.45 lb solids/lb BOD_5

$$SP = 1.0(200)0.45(8.34)$$

$$\underline{SP = 750 \text{ lb/day}}$$

7-8. Cost Data. Appropriate cost data and economic evaluation may be found in Chapter 8.

7-9. Bibliography.

a. American Society of Civil Engineers and the Water Pollution Control Federation, "Sewage Treatment Plant Design," Manual of Practice No. 8, 1959, 1961, 1967, 1968, Water Pollution Control Federation, Washington, D. C.

b. Baker, J. M. and Graves, Q. B., "Recent Approaches for Trickling Filter Design," Journal, Sanitary Engineering Division, American Society of Civil Engineers, Vol 94, SA1, Feb 1968, pp 65-84.

c. Benjes, H. H., "Small Community Wastewater Treatment Facilities - Biological Treatment Systems," prepared for the Environmental Protection Agency, Technology Transfer National Seminar on Small Wastewater Treatment Systems, March 1977.

d. Brown, J. C. et al., "Methods for Improvement of Trickling Filter Plant Performance - Part I, Mechanical and Biological Optima," Report No. 670/2-73-047a, Aug 1973, U. S. Environmental Protection Agency, Washington, D. C.

e. Clark, J. W. and Viessman, W., Jr., Water Supply and Protection Control, International Textbook Co., Scranton, 1966.

f. Dow Chemical Company, "A Literature Search and Critical Analysis of Biological Trickling Filter Studies - Vols I and II," Report No. 17050-DDY, Dec 1971, U. S. Environmental Protection Agency, Washington, D. C.

g. Eckenfelder, W. W., Jr., "Trickling Filter Design and Performance," Transactions, American Society of Civil Engineers, Vol 128, Part III, 1963, pp 371-394.

h. Eckenfelder, W. W., Jr., Water Quality Engineering for Practicing Engineers, Barnes and Nobel, New York, 1970.

i. Eckenfelder, W. W., Jr., and Barnhardt, W., "Performance of a High-Rate Trickling Filter Using Selected Media," Journal, Water Pollution Control Federation, Vol 35, No. 12, 1963, 1535-1551.

j. Eckenfelder, W. W., Jr., and Ford, D. L., Water Pollution Control, Pemberton Press, New York, 1970.

k. Fair, G. M., Geyer, J. C., and Okun, D. A., Water Purification and Wastewater Treatment and Disposal; Water and Wastewater Engineering, Vol 2, Wiley, New York, 1968.

l. Galler, W. A. and Gotaas, H. B., "Analysis of Biological Filter Variables," Journal, Sanitary Engineering Division, American Society of Civil Engineers, Vol 90, SA6, 1964, pp 59-79.

m. Germain, J., "Economic Treatment of Domestic Waste by Plastic-Medium Trickling Medium Filters," 38th Annual Conference, Water Pollution Control Federation, Oct 1965, Atlantic City, N. J.

n. Great Lakes-Upper Mississippi River Board of State Sanitary Engineers, "Recommended Standards for Sewage Works (Ten State Standards)," 1971, Health Education Service. Albany, N. Y.

o. Liptak, B. G., Environmental Engineers' Handbook, Volume I, Water Pollution, Chilton Book Co., 1974, Radnor, Pa.

p. McKinney, R. E., Microbiology for Sanitary Engineers, McGraw-Hill, New York, 1962.

q. National Research Council, "Trickling Filters (in Sewage Treatment at Military Installations)," Sewage Works Journal, Vol 18, No. 5, 1946, pp 787-1028.

r. Roy F. Weston, Inc., "Process Design Manual for Upgrading Existing Wastewater Treatment Plants," prepared for the U. S. Environmental Protection Agency, Technology Transfer, Oct 1971, Washington, D. C.

s. Schulze, K. L., "Load and Efficiency of Trickling Filters," Journal, Water Pollution Control Federation, Vol 32, No. 3, pp 245-261.

t. Velz, C. J., "A Basic Law for the Performance of Biologic Beds," Sewage Works Journal, Vol 20, No. 3, 1960, pp 245-261.

(next page is 7-13)

Section III. PLUG FLOW ACTIVATED SLUDGE

7-10. Background.

a. Activated sludge is defined as "sludge floc produced in raw or settled wastewater by the growth of zoogleal bacteria and other organisms in the presence of dissolved oxygen and accumulated in sufficient concentration by returning floc previously found." Similarly, the activated-sludge process is defined as "a biological wastewater treatment process in which a mixture of wastewater and activated sludge is agitated and aerated." The activated sludge is subsequently separated from the treated wastewater (mixed liquor) by sedimentation and wasted or returned to the process as needed (para 7-18a).

b. In the past few decades, many modifications of this process have been developed, although only two process variations are significant: the conventional system, which achieves absorption, flocculation, and synthesis in a single step; and contact stabilization during which oxidation and synthesis of removed organics occur in a separate aeration tank.

c. In the following paragraphs, seven activated sludge process modifications and variations will be considered: conventional plug flow, complete mix, step aeration, modified-aeration or high-rate, contact stabilization, extended aeration, and pure oxygen system. While other modifications of the activated sludge process exist (namely tapered aeration and the Kraus process) they will not be included in this chapter.

7-11. Plug Flow Activated Sludge.

a. The plug flow activated sludge process uses an aeration tank, a settling tank, and a sludge return line to treat wastewater (fig. 7-2).

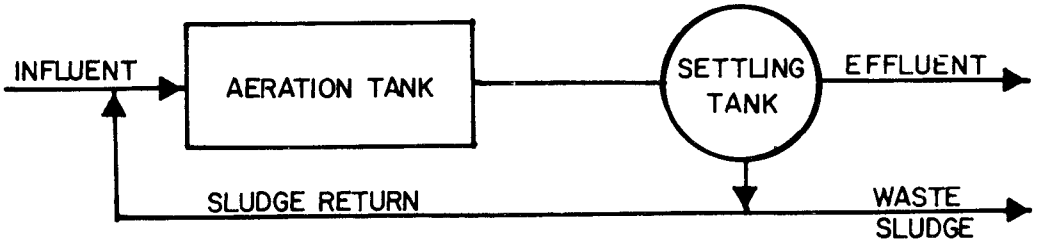

Figure 7-2. Plug flow activated sludge.

b. Wastewater and returned sludge from the secondary clarifier enter the head of the aeration tank to undergo a specified period of aeration. Diffused or mechanical aeration is used to provide the necessary oxygen and adequate mixing of the influent waste and recycled sludge, the concentration of which is high at the head of the tank and decreases with aeration time. Absorption, flocculation, and synthesis of the organic matter take place during aeration. The mixed liquor (sludge floc plus liquid in the aeration tank) is settled in the secondary clarifier, and sludge is returned at a rate sufficient to maintain the desired mixed liquor suspended solids in the aeration tank.

c. Process design parameters and design examples are found in paragraph 7-18c, h, o, and t.

7-12. Input Data.

a. Wastewater Flow (Average and Peak). In case of high variability, a statistical distribution should be provided.

b. Wastewater Strength.

(1) BOD_5 (soluble and total), mg/ℓ.

(2) COD and/or TOC (maximum and minimum), mg/ℓ.

(3) Suspended solids, mg/ℓ.

(4) Volatile suspended solids (VSS), mg/ℓ.

(5) Nonbiodegradable fraction of VSS, mg/ℓ.

c. Other Characterization.

(1) pH.

(2) Acidity and/or alkalinity, mg/ℓ.

(3) Nitrogen,[1] mg/ℓ.

(4) Phosphorus (total and soluble), mg/ℓ.

---

[1] The form of nitrogen should be specified as to its biological availability (e.g., NH_3 or Kjeldahl).

(5) Oils and greases, mg/ℓ.

(6) Heavy metals, mg/ℓ.

(7) Toxic or special characteristics (e.g., phenols), mg/ℓ.

(8) Temperature, °F or °C.

d. Effluent Quality Requirements.

(1) BOD_5, mg/ℓ.

(2) SS, mg/ℓ.

(3) TKN, mg/ℓ.

(4) P, mg/ℓ.

(5) Total nitrogen (TKN + NO_3 - N), mg/ℓ.

(6) Settleable solids, mg/ℓ/hr.

7-13. Design Parameters.

a. Reaction rate constants and coefficients (average values to be used in absence of specific data).

Constants (Eckenfelder)	Range
k	0.0007 to 0.002 ℓ/mg/hr
a	0.73
a'	0.52
b	0.075/day
f	0.4
b'	0.15/day
f'	0.53

b. Organic loading, F/M ratio.

F/M = (0.2-0.4)

c. Volumetric loading (lb BOD_5/1000 ft^3/day).

Range 20-40

d. Hydraulic detention time, t .

t = (4-8) hr

e. Solids retention time, t_s .

t_s = (5-15) days

f. Mixed liquor suspended solids concentration, MLSS.

MLSS = (1500-3000) mg/ℓ

g. Mixed liquor volatile suspended solids, MLVSS.

MLVSS = 0.7 MLSS

= (1050-2100) mg/ℓ

h. Recycle ratio, Qr/Q .

Qr/Q = (0.25-0.5)

i. Oxygen requirements, lb O_2/lb BOD_r.

lb O_2/lb $BOD_r \geq 1.25$

j. Sludge production, lb solids/lb BOD_r.

lb solids/lb BOD_r = 0.5-0.7

k. Temperature coefficient, θ .

θ = 1.0-1.03

l. BOD removal efficiency (80-90 percent).

m. Return sludge concentration.

7-14. Design Procedure (Eckenfelder's Approach).

a. Assume the following design parameters from 7-13 when unknown.

(1) BOD removal rate constant (k).

(2) Fraction of BOD synthesized (a).

(3) Fraction of BOD oxidized for energy (a').

(4) Endogenous respiration rate (b and b').

(5) Mixed liquor suspended solids (MLSS).

(6) Mixed liquor volatile suspended solids (MLVSS).

(7) Food-to-microorganism ratio (F/M).

(8) Nonbiodegradable fraction of VSS in influent (f).

(9) Degradable fraction of the MLVSS (f').

(10) Temperature correction coefficient (Θ).

b. Adjust k for temperature.

$$K_T = K_{20}\Theta^{(T-20)}$$

where

K_T = rate constant at desired temperature, °C

K_{20} = rate constant at 20°C

Θ = temperature correction coefficient

T = temperature, °C

c. Determine the size of the aeration tank by first determining the detention time.

$$t = \frac{24S_o}{(X_V)(F/M)}$$

where

t = hydraulic detention time, hr

S_o = influent BOD, mg/ℓ

X_V = MLVSS, mg/ℓ

F/M = food-to-microorganism ratio

d. Check the detention time for treatability.

$$S_e = S_o e^{-kX_V t}$$

where

S_e = BOD_5 (soluble) in effluent, mg/ℓ

S_o = BOD_5 in influent, mg/ℓ

k = BOD removal rate constant, ℓ/mg/hr

X_V = MLVSS, mg/ℓ

t = detention time, hr

Solve for t and compare with t from above and select the larger.

e. Calculate the volume of aeration tank.

$$V = Q_{avg} \times \frac{t}{24}$$

where

V = volume of tanks, million gal

Q_{avg} = average daily flow, mgd

t = detention time, hr

f. Calculate oxygen requirements.

$$\frac{dO}{dt} = \frac{a'S_r}{t} + b'X_V$$

or

$$O_2 = a'(S_r)(Q_{avg})(8.34) + b'(X_V)(V)(8.34)$$

where

dO/dt = oxygen uptake rate, mg/ℓ/hr

a' = fraction of BOD oxidized for energy

S_r = BOD removed ($S_o - S_e$), mg/ℓ

t = detention time, hr

b' = endogenous respiration rate,/hr

X_V = MLVSS, mg/ℓ

O_2 = oxygen required, lb/day

Q_{avg} = average daily flow, mgd

V = volume of aeration tank, million gal

and check the oxygen supplied per pound of BOD removed >1.25.

$$\text{lb } O_2/\text{lb BOD}_r = \frac{O_2}{Q(S_r) \times 8.34}$$

where

O_2 = oxygen required, lb/day

Q = flow, mgd

S_r = BOD removed, mg/ℓ

g. Design aeration system.

(1) Diffused aeration system.

(a) Assume the following design parameters.

1 Standard transfer efficiency (from manufacturer), 5-8 percent (coarse bubble diffuser).

2 O_2 transfer in waste/O_2 transfer in water $\approx 0.9 = \alpha$.

3 O_2 saturation in waste/O_2 saturation in water $\approx 0.9 = \beta$.

4 Correction factor for pressure $\approx 1.0 = p$.

(b) Select summer operating temperature (25-30°C) and determine (from standard tables) O_2 saturation.

(c) Adjust standard transfer efficiency to operating conditions.

$$OTE = STE \frac{\left[(C_s)_T(\beta)(p) - C_L\right]}{9.17} \alpha(1.02)^{T-20}$$

where

OTE = operating transfer efficiency, percent

STE = standard transfer efficiency, percent

$(C_s)_T$ = O_2 saturation at selected summer temperature T , °C, mg/ℓ

β = O_2 saturation in waste/O_2 saturation in water ≈ 0.9

p = correction factor for pressure ≈ 1.0

C_L = minimum dissolved oxygen to be maintained in the basin $\geqslant 2.0$ mg/ℓ

α = O_2 transfer in waste/O_2 transfer in water ≈ 0.9

T = temperature, °C

(d) Calculate required air flow.

$$R_a = \frac{O_2(10^5)(7.48)}{(\text{OTE }\%)\left(0.0176\ \frac{\text{lb } O_2}{\text{ft}^3\ \text{air}}\right)\left(1440\ \frac{\text{min}}{\text{day}}\right) V}$$

where

R_a = required air flow, cfm/1000 ft^3

V = volume of the basin, gal

(2) Mechanical aeration system.

(a) Assume the following design parameters.

1 Standard transfer efficiency, lb/hp-hr (0 dissolved oxygen, 20°C and tap water).

2 O_2 transfer in waste/O_2 transfer in water ≈0.9.

3 O_2 saturation in waste/O_2 saturation in water ≈0.9.

4 Correction factor for pressure ≈1.0.

(b) Select summer operating temperature (25-30°C) and determine (from standard tables) O_2 saturation.

(c) Adjust standard transfer efficiency to operating conditions.

$$\text{OTE} = \text{STE}\ \frac{\left[(C_s)_T(\beta)(p) - C_L\right]}{9.17}\ \alpha(1.02)^{T-20}$$

where

OTE = operating transfer efficiency, lb O_2/hp-hr

STE = standard transfer efficiency, lb O_2/hp-hr

$(C_s)_T$ = O_2 saturation at selected summer temperature, mg/ℓ

β = O_2 saturation in waste/O_2 saturation in water ≈0.9

p = correction factor for pressure ≈1.0

C_T = minimum dissolved oxygen to be maintained in the basin ≥ 2.0 mg/ℓ

α = O_2 transfer in waste/O_2 transfer in water ≈ 0.9

T = temperature, °C

(d) Calculate horsepower requirement.

$$hp = \frac{O_2}{OTE\left(\frac{lb\ O_2}{hp\text{-}hr}\right)(24)(V)} \times 1000$$

where

hp = horsepower required/1000 gal

O_2 = oxygen required per day/lb

OTE = operating transfer efficiency

V = volume of basin, gal

h. Calculate sludge production.

$$\Delta X_V = [0.8 S_{r_{avg}} - b\Delta_V(V) + (Q)(VSS)(f) + Q(SS - VSS)]8.34$$

where

ΔX_V = sludge produced, lb/day

a = fraction of BOD removed synthesized to cell material

S_r = BOD removed, mg/ℓ

Q_{avg} = average flow, mgd

b = endogenous respiration rate/day

V = volume of aeration tank, million gal

Q = flow, mgd

VSS = volatile suspended solids in effluent, mg/ℓ

f = nonbiodegradable fraction of VSS in influent

SS = suspended solids in effluent, mg/ℓ

Check ΔX_V solids produced against pounds of BOD removed (0.5-0.7).

$$\frac{(\text{lb solids})}{(\text{lb BOD}_r)} = \frac{\Delta X_V}{S_r(Q)(8.34)(\%\ \text{volatile})}$$

i. Determine nutrient requirements (lb/day)

for nitrogen

$$N = 0.123\Delta X_V$$

and phosphorus

$$P = 0.026\Delta X_V$$

and check against BOD:N:P = 100:5:1.

j. Calculate sludge recycle ratio.

$$\frac{Q_r}{Q_{avg}} = \frac{X_a}{X_u - X_a}$$

where

Q_r = volume of recycled sludge, mgd

Q_{avg} = average flow, mgd

X_a = MLSS, mg/ℓ

X_u = SS concentration of returned sludge, mg/ℓ

k. Calculate solids retention time.

$$SRT = \frac{(V)(X_a)(8.34)}{\Delta X_a}$$

where

SRT = solids retention time, days

V = volume of aeration tank, million gal

X_a = MLSS, mg/ℓ

$\Delta X_a = \frac{\Delta X_V}{\%\ \text{volatile}}$

1. Calculate effluent BOD_5.

$$\left(BOD_5\right)_{eff} = S_e + (0.84)\left(X_V\right)_{eff}(f')$$

where

S_e = effluent soluble BOD_5, mg/ℓ

$\left(X_V\right)_{eff}$ = volatile solids in effluent, mg/ℓ

f' = degradable fraction of the MLVSS

7-15. Output Data.

a. Aeration Tank.

(1) Reaction rate constant, ℓ/mg/hr.

(2) Sludge produced per BOD removed.

(3) Endogenous respiration rate (b, b')

(4) O_2 utilized per BOD removed.

(5) Influent nonbiodegradable volatile suspended solids (VSS)(f).

(6) Effluent degradable volatile suspended solids (f').

(7) lb BOD/lb MLSS-day (F/M ratio).

(8) Mixed liquor suspended solids, mg/ℓ (MLSS).

(9) Mixed liquor volatile suspended solids, mg/ℓ (MLVSS).

(10) Aeration time, hr.

(11) Volume of aeration tank, million gal.

(12) Oxygen required, lb/day.

(13) Sludge produced, lb/day.

(14) Nitrogen requirement, lb/day.

(15) Phophorus requirement, lb/day.

(16) Sludge recycle ratio, percent.

(17) Solids retention time, days.

b. Diffused Aeration System.

(1) Standard transfer efficiency, percent.

(2) Operating transfer efficiency, percent.

(3) Required air flow, cfm/1000 ft^3.

c. Mechanical Aeration System.

(1) Standard transfer efficiency, lb O_2/hp-hr.

(2) Operating transfer efficiency, lb O_2/hp-hr.

(3) Horsepower required.

d. Final Clarifier. Output (chap 5, sec IX).

7-16. Example Calculations.

a. Assume the following design parameters.

(1) K = 0.0072 ℓ/mg-hr at 20°C.

(2) a = 0.73.

(3) a' = 0.52

(4) $b = 0.075/\text{day}$, $b' = 0.15/\text{day}$.

(5) MLSS = X_a = 3000 mg/ℓ.

(6) MLVSS = X_V = 2400 mg/ℓ.

(7) F/M = 0.40 lb BOD/lb MLVSS-day.

(8) $f = 0.40$.

(9) $f' = 0.53$.

(10) $\Theta = 1.03$.

b. Adjust K for temperature.

$$K_T = K_{20}\Theta^{(T-20)}$$

where

K_T = rate constant at desired temperature

K_{20} = rate constant at 20°C, 0.0012

Θ = temperature correction coefficient, 1.03

T = temperature, 15°C for winter conditions

$$K_T = 0.0012(1.03)^{15-20}$$

$$\underline{K_T = 0.0010\ell/\text{mg-hr}}$$

c. Determine size of aeration tank by determining detention time.

$$t = \frac{24S_o}{X_V(F/M)}$$

where

t = hydraulic detention time, hr

S_o = influent BOD, 200 mg/ℓ

X_V = MLVSS, 2400 mg/ℓ

F/M = food to microorganism ratio, 0.40 lb BOD/lb MLVSS

$$t = \frac{24(200)}{2400(0.40)}$$

$$\underline{t = 5.0 \text{ hr}}$$

d. Check detention time for treatability.

$$S_e = S_o e^{-kX_V t}$$

where

S_e = BOD_5(soluble) in effluent, 10 mg/ℓ

S_o = BOD_5 in influent, 200 mg/ℓ

k = BOD removal rate constant, 0.001 ℓ/mg-hr

X_V = MLVSS, 2400 mg/ℓ

t = detention time, hr

$$10 = 200\ e^{-(0.001)2400(t)}$$

$$\underline{t = 1.25 \text{ hr}}$$

Therefore use <u>t = 5.0 hr</u>

e. Calculate volume of aeration tank.

$$V = Q_{avg} + \frac{t}{24}$$

where

V = volume, million gal

Q_{avg} = average flow, 1.0 mgd

t = detention time, 5.0 hr

$$V = 1.0\left(\frac{5}{24}\right)$$

$$\underline{V = 0.208 \text{ million gal}}$$

f. Calculate oxygen requirements.

$$O_2 = a'S_rQ_{avg}8.34 + b'X_VV8.34$$

where

O_2 = oxygen requirement, lb/day

a' = 0.52

S_r = BOD removed ($S_o - S_e$), 190 mg/ℓ

Q_{avg} = average flow, 1.0 mgd

b' = 0.15/day

X_V = MLVSS, 2400 mg/ℓ

V = volume of aeration tank, 0.208 million gal

$$O_2 = 0.52(190)(1.0)8.34 + 0.15(2400)(0.208)8.34$$

$$\underline{O_2 = 1448 \text{ lb/day}}$$

Check oxygen supplied per lb BOD removed >1.25.

$$\text{lb } O_2/\text{lb BOD}_r = \frac{O_2}{Q(S_r)8.34}$$

where

O_2 = oxygen required, 1448 lb/day

Q = flow, 1.0 mgd

S_r = BOD removed, 190 mg/ℓ

$$\text{lb } O_2/\text{lb BOD}_r = \frac{1448}{1.0(190)8.34}$$

$$\text{lb } O_2/\text{lb BOD}_r = 0.91 < 1.25$$

therefore

$$O_2 = 1.25 \text{ BOD}_r$$

$$O_2 = 1.25(Q)(S_r)8.34$$

$$O_2 = 1.25(1.0)(190)8.34$$

$$\underline{O_2 = 1980 \text{ lb } O_2/\text{day}}$$

g. Design aeration system (diffused).

(1) Assume following parameters.

STE = 5.0 percent

$\alpha = 0.9$

$\beta = 0.9$

p = pressure correction factor, 1.0

(2) Select summer operating temperature and determine O_2 saturation.

$$T = 25°C, \ (C_s)_T = 8.2 \text{ mg}/\ell$$

(3) Determine operating transfer efficiency.

$$\text{OTE} = \text{STE} \ \frac{\left[(C_s)_T \beta p - C_L\right]}{9.17} \alpha(1.02)^{T-20}$$

where

OTE = operating transfer efficiency, percent

STE = standard transfer efficiency, 5 percent

$(C_s)_T$ = 8.2 mg/ℓ

β = 0.9

p = 1.0

C_L = minimum dissolved oxygen, 2.0 mg/ℓ

α = 0.9

T = 25°C

9.17 = O_2 saturation at 20°C

$$OTE = 5 \frac{[8.2(0.9)1 - 2.0]}{9.17} 0.9(1.02)^{25-20}$$

$$\underline{OTE = 2.9 \text{ percent}}$$

(4) Calculate required airflow.

$$R_a = \frac{O_2(10^5)7.48}{OTE(0.0176)1440(V)}$$

where

R_a = required air flow, cfm/1000 ft^3

OTE = operating transfer efficiency, 2.9 percent

V = volume of basin, 208,000 gal

0.0176 = lb O_2 per ft^3 air

1440 = min per day

O_2 = lb O_2/day = 1980

$$R_a = \frac{1980(10^5)7.48}{2.9(0.0176)1440(208,000)}$$

$$\underline{R_a = 96.9 \text{ cfm/1000 ft}^3}$$

h. Calculate sludge production.

$$\Delta X_V = [a(S_r)Q_{avg} - bX_V(V) + Q_{avg}(VSS)f + Q_{avg}(SS - VSS)]8.34$$

where

$a = 0.73$

S_r = BOD removed, 190 mg/ℓ

Q_{avg} = average flow, 1.0 mgd

$b = 0.075$/day

X_V = MLVSS, 2400 mg/ℓ

V = volume of aeration tank, 0.208 million gal

VSS = volatile suspended solids in effluent, 150 mg/ℓ

$f = 0.40$

SS = suspended solids, 200 mg/ℓ

$$\Delta X_V = [0.73(190)1.0 - 0.075(2400)(0.208) + 1.0(150)0.40 + 1.0(200 - 150)]8.34$$

$$\underline{\Delta X_V = 1762 \text{ lb/day}}$$

Check ΔX_V solids produced against pounds of BOD removed (0.5-0.7).

$$\frac{\text{lb solids}}{\text{lb BOD}_r} = \frac{\Delta X_V}{S_r(Q)8.34(\%\text{ volatile})}$$

where

ΔX_V = sludge produced, 1762 lb/day

$$S_r = S_o - S_e \text{ , } 190 \text{ mg/}\ell$$

$$Q = \text{average flow, } 1.0 \text{ mgd}$$

$$\% \text{ volatile} = 80 \text{ percent}$$

$$\frac{\text{lb solids}}{\text{lb BOD}_r} = \frac{1762}{190(1.0)8.34(0.8)}$$

$$\frac{\text{lb solids}}{\text{lb BOD}_r} = 1.4 > 0.7 \text{ (OK)}$$

i. Determine nutrient requirements for nitrogen

$$N = 0.123\ \Delta X_V$$

for phosphorus

$$P = 0.026\ \Delta X_V$$

$$N = 0.123(1762) = 216 \text{ lb/day}$$

$$P = 0.0246(1762) = 43.3 \text{ lb/day}$$

$$N \text{ in influent} = 30 \text{ mg/}\ell\ (Q_{avg})8.34$$

$$N \text{ in influent} = 250.2 > 216 \text{ required}$$

<u>N needed to be added = none</u>

$$P \text{ in influent} = 15 \text{ mg/}\ell\ (Q_{avg})\ 8.34$$

$$P \text{ in influent} = 125.1 > 43.3 \text{ required}$$

<u>P to be added = none</u>

j. Calculate sludge recycle ratio.

$$\frac{Q_r}{Q_{avg}} = \frac{X_a}{X_u - X_a}$$

where

Q_r = volume of recycle sludge, mgd

Q_{avg} = average flow, 1.0 mgd

X_a = MLSS, 3000 mg/ℓ

X_u = solids concentration in recycled sludge, 10,000 mg/ℓ

$$\frac{Q_r}{1.0} = \frac{3{,}000}{10{,}000 - 3{,}000}$$

$$\underline{Q_r = 0.43 \text{ mgd}}$$

k. Calculate solids retention time.

$$SRT = \frac{V(X_a)8.34}{\Delta X_a}$$

where

SRT = solids retention time, days

V = volume of aeration tank, 0.208 million gal

X_a = MLSS, 3000 mg/ℓ

$$\Delta X_a = \frac{\Delta X_V}{\% \text{ volatile}} = \frac{1762}{0.8} = 2202 \text{ lb/day}$$

$$SRT = \frac{0.208(3000)8.34}{2202}$$

$$\underline{SRT = 2.4 \text{ days}}$$

l. Calculate effluent BOD_5.

$$(BOD_5)_{eff} = S_e = 0.84(X_u)_{eff} f'$$

where

$(BOD_5)_{eff}$ = effluent BOD_5, mg/ℓ

S_e = soluble BOD_5, 10 mg/ℓ

$(X_V)_{eff}$ = volatile solids in effluent, 20 mg/ℓ

f' = 0.53

$$(BOD_5)_{eff} = 10 + 0.84(20)0.53$$

$$\underline{(BOD_5)_{eff} = 18.9 \text{ mg/ℓ}}$$

7-17. Cost Data. Appropriate cost data and economic evaluation may be found in Chapter 8.

7-18. Bibliography.

a. American Public Health Association, American Society of Civil Engineers, American Water Works Association, and Water Pollution Control Federation, "Glossary, Water and Wastewater Control Engineering," 1969.

b. American Public Works Association, "Feasibility of Computer Control of Wastewater Treatment," Report No. 17090DOY, Dec 1970, U. S. Environmental Protection Agency, Washington, D. C.

c. American Society of Civil Engineers and the Water Pollution Control Federation, "Sewage Treatment Plant Design," Manual of Practice No. 8, 1959, 1961, 1967, and 1968, Water Pollution Control Federation, Washington, D. C.

d. Bargman, R. D. and Borgerding, J., "Characterization of the Activated Sludge Process," Report No. R2-73-224, Apr 1973, U. S. Environmental Protection Agency, Washington, D. C.

e. Busch, A. W., Aerobic Biological Treatment of Wastewaters, Oligodynamics Press, 1971.

f. Center for Research, Inc., University of Kansas, "Oxygen Consumption in Continuous Biological Culture," Report No. 17050DJS, May 1971, U. S. Environmental Protection Agency, Washington, D. C.

g. City of Austin, Texas, "Design Guides for Biological Wastewater

Treatment Processes," Report No. 11010ESQ, Aug 1971, U. S. Environmental Protection Agency, Washington, D. C.

h. Eckenfelder, W. W., Jr., Industrial Water Pollution Control, McGraw-Hill, New York, 1966.

i. Eckenfelder, W. W., Jr., "General Concepts of Biological Treatment," Manual of Treatment Processes, Vol 1, 1969, Environmental Science Services, Inc., Briarcliff Manor, New York.

j. Eckenfelder, W. W., Jr., Water Quality Engineering for Practicing Engineers, Barnes and Nobel, New York, 1970.

k. Eckenfelder, W. W. Jr., "Activated Sludge and Extended Aeration," Process Design in Water Quality Engineering - New Concepts and Developments, Vanderbilt University, Nashville, Tenn., 1971.

l. Eckenfelder, W. W., Jr., and Ford, D. L., Water Pollution Control, Pemberton Press, New York, 1970.

m. Eckenfelder, W. W., Jr., and O'Connor, O. J., Biological Waste Treatment, Pergamon Press, New York, 1961.

n. Gaudy, A. G., Jr., and Gaudy, E. T., "Biological Concepts for Design and Operation of the Activated Sludge Process," Report No. 17090-FQJ, Sep 1971, U. S. Environmental Protection Agency, Washington, D. C.

o. Goodman, B. L., Design Handbook of Wastewater Systems: Domestic, Industrial, Commercial, Technomic, Westport, Conn, 1971.

p. Goodman, B. L. and Englande, A. J., "A Consolidated Approach to Activated Sludge Process Design," Conference on Toward a Unified Concept of Biological Waste Treatment Design, 5-6 Oct 1972, Atlanta, Ga.

q. Lawarence, A. W. and McCarty, P. L., "Unified Basis for Biological Treatment Design and Operation," Journal, Sanitary Engineering Division, American Society of Civil Engineers, Vol 96, SA3, 1970.

r. Maier, W. J., "Biological Removal of Colloidal Matter from Wastewater," Report No. R2-73-147, Jun 1973, U. S. Environmental Protection Agency, Washington, D. C.

s. McKinney, R. E., Microbiology for Sanitary Engineers, McGraw-Hill, New York, 1962.

t. Metcalf and Eddy, Inc., Wastewater Engineering; Collection, Treatment, and Disposal, McGraw-Hill, New York, 1972.

u. Okun, D. A., "System of Bio-Precipitation of Organic Matter from Sewage," Sewage Works Journal, Vol 21, No. 5, 1949, pp 763-794.

v. Smith, H. S., "Homogeneous Activated Sludge Principles and Features of the Activated Sludge Process," Water and Wastes Engineering, Vol 4, Jul 1967, pp 46-50.

w. Smith, R. and Eilers, R. G., "A Generalized Computer Model for Steady-State Performance of the Activated Sludge Process," FWQA Report No. TWRC-15, Oct 1969, Robert A. Taft Water Research Center, Cincinnati, Ohio.

x. Stensel, H. D. and Shell, G. L., "Two Methods of Biological Treatment Design," Journal, Water Pollution Control Federation, Vol 46, Feb 1974, pp 271-283.

y. Stewart, M. J., "Activated Sludge System Variations - Specific Applications," The 15th Ontario Industrial Waste Conference, 9-12 Jun 1968, Niagara Falls, Ontario.

z. Toerber, E. D., "Full Scale Parallel Activated Sludge Process Evaluation," Report No. R2-72-065, Nov 1972, U. S. Environmental Protection Agency, Washington, D. C.

aa. Weston, R. F., "Design of Sludge Reaeration Activated Sludge Systems," Journal, Water Pollution Control Federation, Vol 33, No. 7, 1961, pp 748-757.

Section IV. COMPLETE MIX ACTIVATED SLUDGE

7-19. Background.

a. There has been much discussion and some confusion concerning the definition of complete mix activated sludge. Nevertheless, any definition will be arbitrary and many differences of opinion will be aired. In this manual it will be assumed that a complete mix activated sludge is achieved when the oxygen uptake rate is uniform throughout all parts of the aeration tank and when sufficient mixing is provided to maintain the solids in the aeration tank in suspension. In complete mixing, the influent primary clarified wastewater and returned sludge flow are distributed at various points in the aeration tank (fig. 7-3). The tank serves to equalize or stabilize variations in flow and waste strength; it also acts as a diluent for toxic materials.

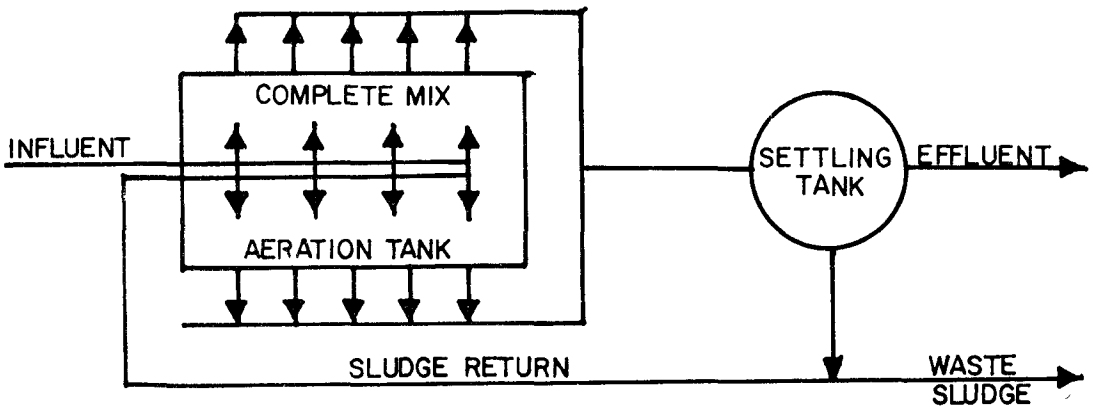

Figure 7-3. Complete mix activated sludge.

b. Organic loading and oxygen demand are uniform throughout the aeration tank, and mechanical or diffused aeration is used to completely mix the mixed liquor.

c. References j, k, r, and y in paragraph 7-26 provide good discussions of the characteristics of this process and also contain considerable data on design parameters and design examples.

7-20. Input Data.

a. Wastewater Flow (Average and Peak). In case of high variability, a statistical distribution should be provided.

b. Wastewater Strength.

(1) BOD_5 (soluble and total), mg/ℓ.

(2) COD and/or TOC (maximum and minimum), mg/ℓ.

(3) Suspended solids, mg/ℓ.

(4) Volatile suspended solids (VSS), mg/ℓ.

(5) Nonbiodegradable fraction of VSS, mg/ℓ.

c. Other Characterization.

(1) pH.

(2) Acidity and/or alkalinity, mg/ℓ.

(3) Nitrogen,[1] mg/ℓ.

(4) Phosphorus (total and soluble), mg/ℓ.

(5) Oils and greases, mg/ℓ.

(6) Heavy metals, mg/ℓ.

(7) Toxic or special characteristics (e.g., phenols), mg/ℓ.

(8) Temperature, °F or °C.

d. Effluent Quality Requirements.

(1) BOD_5, mg/ℓ.

(2) SS, mg/ℓ.

(3) TKN, mg/ℓ.

(4) P, mg/ℓ.

(5) Total nitrogen (TKN + NO_3 - N), mg/ℓ.

---

[1] The form of nitrogen should be specified as to its biological availability (e.g., NH_3 or Kjeldahl).

(6) Settleable solids, mg/ℓ/hr.

7-21. Design Parameters.

a. Reaction rate constants and coefficients.

Constants	Range
McKinney	
K_m	15/hr at 20°C
K_s	10.4/hr at 20°C
K_e	0.02/hr at 20°C
Eckenfelder	
k	0.0007-0.002 ℓ/mg/hr
a	0.73
a'	0.52
b	0.075/day
b'	0.15/day
f	0.40
f'	0.53

b. F/M = (0.3-0.6).

c. Volumetric loading = 50-120.

d. t = (3-6) hr.

e. t_s = (3-7) days.

f. MLSS = (3000-6000) mg/ℓ.

g. MLVSS = 0.7 MLSS = (2100-4200) mg/ℓ.

h. Q_r/Q = (0.25-1.0).

i. lb O_2/lb $BOD_r \geq 1.25$.

j. lb solids/lb BOD_r = (0.5-0.7).

k. θ = (1.0-1.04).

l. Efficiency = (>90 percent).

7-22. Design Procedure.

a. McKinney's Approach.

(1) Assume the following design parameters from 7-21.

(a) Metabolism constant (K_m).

(b) Synthesis factor (K_s).

(c) Endogenous respiration factor (K_e).

(d) Temperature correction coefficient (θ).

(e) Hydraulic detention time (t).

(f) Solids retention time (t_s).

(2) Adjust metabolism constant, synthesis factor, and endogenous respiration factor for temperature.

$$K_T = K_{20}\theta^{(T-20)}$$

where

K_T = rate constant at desired temperature T , °C

K_{20} = rate constant at 20°C

θ = temperature coefficient

T = temperature, °C

(3) Determine size of the aeration tank.

$$V = Q_{avg} t/24$$

where

V = volume of tank, million gal

Q_{avg} = average flow, mgd

t = hydraulic detention time, hr

(4) Determine soluble effluent BOD_5.

$$F_e = \frac{F_i}{1 + K_m t}$$

where

F_e = soluble effluent BOD_5, mg/ℓ

F_i = influent BOD_5, mg/ℓ

K_m = metabolism constant (15/hr at 20°C)

t = hydraulic detention time, hr

and check $F_e \leq 10$ mg/ℓ ; if $F_e > 10$ mg/ℓ , increase t and recalculate new F_e.

(5) Calculate the MLSS concentration.

$$M_T = M_a + M_e + M_i + M_{ii}$$

$$M_a = \frac{K_s F_e}{K_e + 1/24t_s}$$

$$M_e = 0.2K_e M_a t_s (24)$$

$$M_i = SS_i \times \frac{24t_s}{t}$$

$$M_{ii} = SS_{ii} \times \frac{24t_s}{t} + 0.1(M_a + M_e) \quad .$$

where

M_T = total mass, mg/ℓ

M_a = living, active mass, mg/ℓ

M_e = endogenous mass, mg/ℓ

M_i = inert nonbiodegradable organic mass, mg/ℓ

M_{ii} = inert inorganic suspended solids, mg/ℓ

K_s = synthesis factor, 1/hr (10.4/hr at 20°C)

F_e = effluent BOD_5, mg/ℓ

K_e = endogenous respiration factor, 1/hr (0.02/hr at 20°C)

t_s = solids retention time, days

SS_i = inert organic SS in influent, mg/ℓ

= VSS × percent nonbiodegradable (≈0.4 VSS for municipal waste)

SS_{ii} = inert inorganic SS fraction in the influent

and check M_T against 3000-6000 mg/ℓ; vary t_s or t until M_T falls within desired range.

(6) Check organic loading against F/M = 0.3-0.6.

$$F/M = \frac{24F_i}{M_T t}$$

where

F/M = food to microorganism ratio

F_i = influent BOD_5, mg/ℓ

M_T = total mass, mg/ℓ

t = hydraulic detention time, hr

If F/M < lower limit, it is possible to reduce t and recalculate M_T
If F/M > upper limit, increase t and recalculate M_T .

(7) Calculate the oxygen requirements.

(a) Select the oxygen uptake rate. The average rate of oxygen demand, if the waste load is uniform, is given by

$$\frac{dO}{dt} = \frac{1.5(F_i - F_e)}{t} - \frac{1.42(M_a + M_e)}{24t_s}$$

where

dO/dt = average oxygen uptake under uniform flow conditions, mg/ℓ

F_i = influent BOD_5, mg/ℓ

F_e = soluble effluent BOD_5, mg/ℓ

t = hydraulic detention time, hr

M_a = living, active mass, mg/ℓ

M_e = endogenous mass, mg/ℓ

t_s = solids retention time, days

Under conditions where the load varies, the oxygen uptake is equal to the synthesis oxygen demand plus the endogenous respiration oxygen demand or

$$\frac{dO}{dt} = \left[\frac{0.5(F_i - F_e)}{t}\right] \frac{Q_p}{Q_{avg}} + 1.14K_eM_a$$

$$\text{lb } O_2/\text{hr} = \frac{dO}{dt} \times V \times 8.34$$

where

Q_p = peak flow, mgd

Q_{avg} = average flow, mgd

K_e = endogenous respiration factor, hr (0.02/hr at 20°C)

(b) Check oxygen supplied per pound of BOD removed >1.25.

$$\frac{\text{lb } O_2}{\text{lb BOD}_r} = \frac{\text{lb } O_2/\text{hr } (24)}{Q(F_i - F_e)8.34}$$

(8) Design aeration system and check horsepower for complete mixing against horsepower required for complete mixing ≥0.1 hp/1000 gal; select the larger horsepower.

(a) Diffused Aeration System.

1 Assume the following design parameters.

a Standard transfer efficiency, percent, from manufacturer (5-8 percent).

b O_2 transfer in waste/O_2 transfer in water ≈0.9.

c O_2 saturation in waste/O_2 saturation in water ≈0.9.

d Correction factor for pressure ≈1.0.

2 Select summer operating temperature (25-30°C) and determine (from standard tables) O_2 saturation.

3 Adjust standard transfer efficiency to operating conditions.

$$\text{OTE} = \text{STE} \frac{\left[(C_s)_T(\beta)(p) - C_L\right]}{9.17} \alpha(1.02)^{T-20}$$

where

OTE = operating transfer efficiency, percent

STE = standard transfer efficiency, percent

$(C_s)_T$ = O_2 saturation at selected summer temperature T , °C, mg/ℓ

β = O_2 saturation in waste/O_2 saturation in water ≈0.9

p = correction factor for pressure ≈ 1.0

C_L = minimum dissolved oxygen to be maintained in the basin $\geqslant 2.0$ mg/ℓ

α = O_2 transfer in waste/O_2 transfer in water ≈ 0.9

T = temperature, °C

4 Calculate required air flow.

$$R_a = \frac{O_2(10^5)(7.48)}{(OTE)\left(0.0176 \frac{lb\ O_2}{ft^3\ air}\right)\left(1440 \frac{min}{day}\right) V}$$

where

R_a = required air flow, cfm/1000 ft^3

O_2 = oxygen required, lb/day

OTE = operating transfer efficiency, percent

V = volume of basin, gal

(b) Mechanical Aeration System.

1 Assume the following design parameters.

a Standard transfer efficiency, lb/hp-hr (0 dissolved oxygen, 20°C, and tap water)(5-8 percent).

b O_2 transfer in waste/O_2 transfer in water ≈ 0.9.

c O_2 saturation in waste/O_2 saturation in water ≈ 0.9.

d Correction factor for pressure ≈ 1.0.

2 Select summer operating temperature (25-30°C), and determine (from standard tables) O_2 saturation.

3 Adjust standard transfer efficiency to operating conditions.

$$OTE = STE \frac{\left[(C_s)_T(\beta)p - C_L\right]}{9.17} \alpha(1.02)^{T-20}$$

where

OTE = operating transfer efficiency, lb O_2/hp-hr

STE = standard transfer efficiency, lb O_2/hp-hr

$(C_s)_T$ = O_2 saturation at selected summer temperature T , °C, mg/ℓ

β = O_2 saturation in waste/O_2 saturation in water ≈0.9

p = correction factor for pressure ≈1.0

C_L = minimum dissolved oxygen to be maintained in the basin ⩾ 2.0 mg/ℓ

α = O_2 transfer in waste/O_2 transfer in water ≈0.9

T = temperature, °C

4 Calculate horsepower requirement.

$$hp = \frac{O_2}{\left(OTE \frac{lb\ O_2}{hp\text{-}hr}\right)(24)(V)} \times 1000$$

where

hp = horsepower required/1000 gal

O_2 = oxygen required, lb/day

OTE = operating transfer efficiency, lb O_2/hp-hr

V = volume of basin, gal

(9) Calculate sludge production and determine pounds of sludge wasted per day.

$$\Delta M_T = \frac{M_T V(8.34)}{t_s}$$

where

ΔM_T = sludge produced, lb/day

M_T = total mass, mg/ℓ

V = volume of aeration tank, million gal

t_s = solids retention time, days

(10) Check solids produced per pound of BOD removed.

$$\frac{\text{lb solids}}{\text{lb BOD}_r} = \frac{\Delta M_T}{Q(F_i - F_e)8.34}$$

where

ΔM_T = sludge produced, lb/day

Q = flow, mgd

F_i = influent BOD_5, mg/ℓ

F_e = effluent BOD_5, mg/ℓ

(11) Calculate sludge recycle ratio.

$$\frac{Q_r}{Q} = \frac{M_T}{M_u - M_T}$$

where

Q_r = volume of recycled sludge, mgd

Q = flow, mgd

M_T = total mass, mg/ℓ

solids concentration in return sludge, mg/ℓ

Calculate total effluent BOD_5.

$$\left(BOD_5\right)_{eff} = S_e + 0.84(SS_{eff})\left(\frac{M_a}{M_T}\right)(0.76)$$

where

S_e = effluent soluble BOD, mg/ℓ

$(SS)_{eff}$ = effluent suspended solids, mg/ℓ

M_a = living mass, mg/ℓ

M_T = total mass, mg/ℓ

(13) Determine nutrient requirements, lb/day

for nitrogen

$$N = 0.123\Delta M_T (\text{or } X_V)$$

and phosphorus

$$P = 0.026\Delta M_T (\text{or } X_V)$$

where

ΔM_T = sludge produced, lb/day

ΔX_V = sludge produced, lb/day

and check against BOD:N:P = 100:5:1

b. Eckenfelder's Approach.

(1) Assume the following design parameters from paragraph 7-21 when unknown.

(a) BOD removal rate constant (k).

(b) Fraction of BOD synthesized (a).

(c) Fraction of BOD oxidized for energy (a').

(d) Endogenous respiration rate (b and b').

(e) Mixed liquid suspended solids (MLSS).

(f) Mixed liquid volatile suspended solids (MLVSS).

(g) Food-to-microorganism ratio (F/M).

(h) Nonbiodegradable fraction of VSS in influent (f).

(i) Degradable fraction of the MLVSS (f').

(j) Temperature correction coefficient (Θ).

(2) Adjust rate constant for temperature.

$$K_T = K_{20}\Theta^{(T-20)}$$

where

K_T = rate constant at desired temperature, °C

K_{20} = rate constant at 20°C

Θ = temperature correction coefficient

T = temperature, °C

(3) Determine the size of the aeration tank by first determining the detention time t .

$$t = \frac{24S_o}{(X_V)(F/M)}$$

where

t = hydraulic time, hr

S_o = influent BOD_5, mg/ℓ

X_V = MLVSS, mg/ℓ

F/M = food-to-microorganism ratio

(4) Check detention time for treatability

$$\frac{S_e}{S_o} = \frac{1}{1 + kX_V t}$$

where

S_e = BOD_5 (soluble) in effluent, mg/ℓ

S_o = BOD_5 in influent, mg/ℓ

k = BOD removal rate constant, ℓ/mg/hr

X_V = MLVSS, mg/ℓ

t = detention time, hr

Solve for t and compare with t above and select the larger.

(5) Calculate the volume of aeration tank.

$$V = Q_{avg} \times \frac{t}{24}$$

where

V = volume, million gal

Q_{avg} = average daily flow, mgd

t = detention time, hr

(6) Calculate oxygen requirements.

$$\frac{dO}{dt} = \frac{a'S_r}{t} + b'X_V$$

or

$$O_2 = a'(S_r)(Q_{avg})(8.34) + b'(X_V)(V)(8.34)$$

where

dO/dt = oxygen uptake rate, mg/ℓ/hr

a' = fraction of BOD oxidized for energy

S_r = BOD removed (S_o - S_e), mg/ℓ

t = detention time, hr

b' = endogenous respiration, 1/hr

X_V = MLVSS

O_2 = oxygen requirement, lb/day

Q_{avg} = average flow rate, mgd

V = volume of aeration tank, million gal

and check the oxygen supplied against paragraph 7-21 $\geq$1.25

$$\text{lb } O_2/\text{lb BOD}_r = \frac{O_2}{Q(S_r) \times 8.34}$$

where

O_2 = oxygen required, lb/day

Q = flow, mgd

S_r = BOD removed, mg/ℓ

(7) Design aeration system and check horsepower supply for mixing against horsepower required for complete mixing $\leq$0.1 hp/1000 gal.

(a) Diffused Aeration System.

1 Assume the following design parameters.

a Standard transfer efficiency, percent, from manufacturer (5-8 percent).

b O_2 transfer in waste/O_2 transfer in water $\approx$0.9.

c O_2 saturation in waste/O_2 saturation in water $\approx$0.9.

d Correction factor for pressure $\approx$1.0.

2 Select summer operating temperature (25-30°C) and determine (from standard tables) O_2 saturation.

3 Adjust standard transfer efficiency to operating conditions.

$$OTE = STE \frac{[(C_s)_T(\beta)(p) - C_L]}{9.17} \alpha(1.02)^{T-20}$$

where

OTE = operating transfer efficiency, percent

STE = standard transfer efficiency, percent

$(C_s)_T$ = O_2 saturation at selected summer temperature T, °C, mg/ℓ

β = O_2 saturation in waste/O_2 saturation in water ≈ 0.9

p = correction factor for pressure ≈ 1.0

C_L = minimum dissolved oxygen to be maintained in the basin $\geqslant 2.0$ mg/ℓ

α = O_2 transfer in waste/O_2 transfer in water ≈ 0.9

T = temperature, °C

4 Calculate required air flow.

$$R_a = \frac{O_2(10^5)(7.43)}{(OTE)\left(0.0176 \frac{\text{lb } O_2}{\text{ft}^3 \text{ air}}\right)\left(1440 \frac{\text{min}}{\text{day}}\right) V}$$

where

R_a = required air flow, cfm/1000 ft^3

O_2 = required oxygen, lb/day

OTE = operating transfer efficiency, percent

V = volume of basin, gal

(b) Mechanical Aeration System.

1 Assume the following design parameters.

a Standard transfer efficiency, lb/hp-hr (0 dissolved oxygen, 20°C, and tap water) (5-8 percent).

b O_2 transfer in waste/O_2 transfer in water ≈ 0.9.

c O_2 saturation in waste/O_2 saturation in water ≈ 0.9.

d Correction factor for pressure ≈ 1.0.

2 Select summer operating temperature (25-30°C) and determine (from standard tables) O_2 saturation.

3 Adjust standard transfer efficiency to operating conditions.

$$OTE = STE \frac{[(C_s)_T(\beta)(p) - C_L]}{9.17} \alpha(1.02)^{T-20}$$

where

OTE = operating transfer efficiency, lb O_2/hp-hr

STE = standard transfer efficiency, lb O_2/hp-hr

$(C_s)_T$ = O_2 saturation at selected summer temperature T, °C, mg/ℓ

β = O_2 saturation in waste/O_2 saturation in water ≈ 0.9

p = correction factor for pressure ≈ 1.0

C_L = minimum dissolved oxygen to be maintained in the basin $\geqslant 2.0$ mg/ℓ

α = O_2 transfer in waste/O_2 transfer in water

T = temperature, °C

4 Calculate horsepower requirement.

$$hp = \frac{O_2}{OTE \frac{lb\ O_2}{hp\text{-}hr} (24)(V)} \times 1000$$

where

hp = horsepower required/1000 gal

O_2 = oxygen required, lb/day

OTE = operating transfer efficiency, lb O_2/hp-hr

V = volume of basin, gal

(8) Calculate sludge production.

$$\Delta X_V = [aS_r Q_{avg} - bX_V V + fQ(VSS) + Q(SS - VSS)]8.34$$

where

ΔX_V = sludge produced, lb/day

a = fraction of BOD removed synthesized to cell material

S_r = BOD removed, mg/ℓ

Q_{avg} = average flow, mgd

b = endogenous respiration rate/day

X_V = MLVSS, mg/ℓ

V = volume of basin, gal

f = nonbiodegradable fraction of influent VSS

Q = flow, mgd

VSS = volatile suspended solids in effluent, mg/ℓ

SS = suspended solids in influent, mg/ℓ

(9) Calculate solids produced per pound of BOD_5 removed and check ΔX_V against value given in paragraph 7-21.

$$\frac{\text{lb solids}}{(\text{lb } BOD_r)} = \frac{\Delta X_V}{S_r(Q)(8.34)}$$

where

ΔX_V = sludge produced, lb/day

S_r = BOD removed, mg/ℓ

Q = flow, mgd

(10) Calculate sludge recycle ratio.

$$\frac{Q_r}{Q} = \frac{X_a}{X_u - X_a}$$

where

Q_r/Q = sludge recycle ratio

Q_r = volume of recycled sludge, mgd

Q = flow, mgd

X_a = MLSS, mg/ℓ

X_u = solids concentration in return sludge, mg/ℓ

(11) Calculate solids retention time.

$$SRT = \frac{(V)X_a(8.34)}{\Delta X_a}$$

where

SRT = solids retention time, days

$$\Delta X_a = \frac{\Delta X_V}{\%\ \text{volatile}}$$

(12) Calculate effluent BOD_5.

$$(BOD_5)_{eff} = S_e + 0.84(X_V)_{eff}f'$$

where

S_e = effluent soluble BOD, mg/ℓ

$(X_V)_{eff}$ = effluent volatile suspended solids, mg/ℓ

f' = degradable fraction of MLVSS

(13) Determine nutrient requirements, lb/day

for nitrogen

$$N = 0.123\Delta M_T (\text{or } \Delta X_V)$$

and phosphorus

$$P = 0.026\Delta M_T (\text{or } \Delta X_V)$$

where

ΔM_T = sludge produced, lb/day

ΔX_V = sludge produced, lb/day

and check against BOD:N:P = 100:5:1.

7-23. Output Data.

a. Aeration Tank.

(1) Reaction rate constant, ℓ/mg/hr.

(2) Sludge produced per BOD removed.

(3) Endogenous respiration rate (b, b').

(4) O_2 utilized per BOD removed.

(5) Influent nonbiodegradable VSS (f).

(6) Effluent degradable VSS (f').

(7) lb BOD/lb MLSS-day (F/M ratio).

(8) Mixed liquor SS, mg/ℓ (MLSS).

(9) Mixed liquor VSS, mg/ℓ (MLVSS).

(10) Aeration time, hr.

(11) Volume of aeration tank, million gal.

(12) Oxygen required, lb/day.

(13) Sludge produced, lb/day.

(14) Nitrogen requirement, lb/day.

(15) Phosphorus requirement, lb/day.

(16) Sludge recycle ratio, percent.

(17) Solids retention time, days.

b. Diffused Aeration System.

(1) Standard transfer efficiency, percent.

(2) Operating transfer efficiency, percent.

(3) Required air flow, cfm/1000 ft^3.

c. Mechanical Aeration System.

(1) Standard transfer efficiency, lb O_2/hp-hr.

(2) Operating transfer efficiency, lb O_2/hp-hr.

(3) Horsepower required.

7-24. Example Calculations, Eckenfelder's Approach.

a. Assume the following design parameters.

(1) k = 0.0012 ℓ/mg-hr.

(2) a = 0.73.

(3) a' = 0.5.

(4) b = 0.075/day, b' = 0.15/day.

(5) MLSS = X_a = 3000 mg/ℓ.

(6) MLVSS = X_V = 2400 mg/ℓ.

(7) F/M = 0.40 lb BOD/lb MLVSS-day.

(8) $f = 0.40$.

(9) $f' = 0.53$.

(10) $\Theta = 1.03$.

b. Adjust the BOD removal rate constant for winter conditions, $T = 15°C$.

$$K_T = K_{20}\Theta^{T-20}$$

where

K_T = rate constant at temperature T

K_{20} = rate constant at 20°C, 0.0012 ℓ/mg-hr

T = temperature, 15°C

Θ = temperature correction coefficient, 1.03

$$K_T = 0.0012(1.03)^{15-20}$$

$$\underline{K_T = 0.0010 \text{ ℓ/mg-hr}}$$

c. Determine size of aeration tank by determining detention time.

$$t = \frac{24\ S_o}{X_V(F/M)}$$

where

t = hydraulic detention time, hr

S_o = influent BOD, 200 mg/ℓ

X_V = MLVSS, 2400 mg/ℓ

F/M = food-to-microorganism ratio, 0.40 lb BOD/lb MLVSS

$$t = \frac{24(200)}{2400(0.40)}$$

$$\underline{t = 5.0 \text{ hr}}$$

d. Check detention time for treatability.

$$\frac{S_e}{S_o} = \frac{1}{1 + KX_V t}$$

where

S_e = effluent BOD_5 (soluble), 10 mg/ℓ

S_o = influent BOD_5, 200 mg/ℓ

K = BOD removal rate constant, 0.001 ℓ/mg/hr

X_V = MLVSS, 2400 mg/ℓ

t = detention time, hr

$$\frac{10}{200} = \frac{1}{1 + (0.001)2400(t)}$$

$$\underline{t = 7.9 \text{ hr} > 5.0 \text{ hr}}$$

e. Calculate the volume of the aeration tank.

$$V = Q_{avg}\left(\frac{t}{24}\right)$$

where

V = volume, million gal

Q_{avg} = average flow, 1.0 mgd

t = detention time, 7.9 hr

$$V = 1.0\left(\frac{7.9}{24}\right)$$

$$\underline{V = 0.329 \text{ million gal}}$$

f. Calculate oxygen requirements.

$$O_2 = a'S_rQ_{avg}(8.34) + b'X_VV8.34$$

where

O_2 = oxygen required, lb/day

a' = 0.52

S_r = BOD removed ($S_o - S_e$), 190 mg/ℓ

Q_{avg} = average flow, 1.0 mgd

b' = 0.15/day

X_V = MLVSS, 2400 mg/ℓ

V = volume of aeration tank, 0.329 million gal

$$O_2 = 0.52(190)1.0(8.34) + 0.15(2400)0.329(8.34)$$

$$\underline{O_2 = 1812 \text{ lb/day}}$$

Check oxygen supplied per lb BOD removed >1.25.

$$\frac{\text{lb } O_2}{\text{lb BOD}_r} = \frac{O_2}{Q(S_r)8.34}$$

where

O_2 = oxygen required, 1812 lb/day

Q = average flow, 1.0 mgd

S_r = BOD removed, 190 mg/ℓ

$$\frac{\text{lb } O_2}{\text{lb BOD}_r} = \frac{1812}{1.0(190)8.34}$$

$$\text{lb } O_2/\text{lb BOD}_r = 1.14 < 1.25$$

Therefore

$O_2 = 1.25\ BOD_r$

$O_2 = 1.25\ Q(S_r)8.34$

$O_2 = 1.25(1.0)190(8.34)$

$$\underline{O_2 = 1980\ lb/day}$$

g. Design aeration system (mechanical surface).

(1) Assume the following parameters,

STE = 5.0 percent

$\alpha = 0.9$

$\beta = 0.9$

p = pressure correction factor, 1.0

(2) Select summer operating temperature and determine O_2 saturation.

$$T = 25°C,\ (C_s)_T = 8.2\ mg/\ell$$

(3) Determine operating transfer efficiency.

$$OTE = STE\ \frac{[(C_s)_T(\beta)(p) - C_L]}{9.17}\ \alpha(1.02)^{T-20}$$

where

OTE = operating transfer efficiency, percent

STE = standard transfer efficiency, 5.0 percent

$(C_s)_T = 8.2\ mg/\ell$

C_L = minimum dissolved oxygen, 2.0 mg/ℓ

$T = 25°C \quad \alpha = 0.9 \quad \beta = 0.9$

9.17 = O_2 saturation at 20°C

$$OTE = 5.0 \frac{[8.2(0.9)1.0 - 2.0]}{9.17} 0.9(1.02)^{25-20}$$

$$\underline{OTE = 2.9\% \text{ or lb } O_2/\text{hp-hr}}$$

(4) Calculate horsepower requirements.

$$hp = \frac{O_2}{OTE(24)V}$$

where

hp = horsepower requirements, hp/1000 gal

O_2 = oxygen required, 1980 lb/day

OTE = operating transfer efficiency, 2.9 percent

V = volume of aeration tank, 0.329 million gal

$$hp = \frac{1980}{2.9(24)0.329(1000)}$$

$$\underline{hp = 0.09 \text{ hp/1000 gal} < 0.1 \text{ hp/1000 gal}}$$

Therefore use hp = 0.1 hp/1000 gal

$$hp = 0.1(V)1000$$

$$hp = 0.1(0.329)1000$$

$$\underline{hp = 32.9 \text{ hp (use 35 hp)}}$$

h. Calculate sludge production.

$$\Delta X_V = [a(S_r)Q_{avg} - bX_V(V) + Q_{avg}(VSS)f + Q_{avg}(SS - VSS)]8.34$$

where

ΔX_V = sludge produced, lb/day

a = 0.73

S_r = BOD removed, 190 mg/ℓ

Q_{avg} = 1.0 mgd

b = 0.075/day

X_V = 2400 mg/ℓ

V = 0.329 million gal

VSS = effluent volatile suspended solids, 150 mg/ℓ

f = 0.40

SS = suspended solids in influent, 200 mg/ℓ

$$\Delta X_V = [0.73(190)1.0 - 0.075(2400)0.329 + 1.0(150)0.40 + 1.0(200 - 150)]8.34$$

$$\underline{\Delta X_V = 1580 \text{ lb/day}}$$

i. Calculate solids produced per pound of BOD_5 removed and check $\Delta X_V > 0.5\text{-}0.7$.

$$\frac{\text{lb solids}}{\text{lb BOD}_5} = \frac{\Delta X_V}{S_r Q 8.34}$$

where

ΔX_V = solids produced, 1580 lb/day

S_r = BOD removed ($S_o - S_e$), 190 mg/ℓ

Q = average flow, 1.0 mgd

$$\frac{\text{lb solids}}{\text{lb BOD}_r} = \frac{1580}{190(1.0)8.34}$$

$$\underline{\text{lb solids/lb BOD}_r = 1.0 > 0.5\text{-}0.7 \text{ (OK)}}$$

j. Calculate sludge recycle ratio.

$$\frac{Q_r}{Q} = \frac{X_a}{X_u - X_a}$$

where

Q_r = volume of recycled sludge, mgd

Q = average flow, 1.0 mgd

X_a = MLSS, 3000 mg/ℓ

X_u = return sludge concentration, 10,000 mg/ℓ

$$\frac{Q_r}{1.0} = \frac{3,000}{10,000-3,000}$$

$$\underline{Q_r = 0.429 \text{ mgd}}$$

k. Calculate solids retention time.

$$SRT = \frac{V(X_a)8.34}{\Delta X_a}$$

where

SRT = solids retention time, days

V = volume of aeration tank, 0.329 million gal

X_a = MLSS, 3000 mg/ℓ

$\Delta X_a = \Delta X_V$/% volatile = 1580/0.80 = 1975 lb/day

$$SRT = \frac{0.329(3000)8.34}{1975}$$

$$\underline{SRT = 4.2 \text{ days}}$$

l. Calculate effluent BOD_5.

$$(BOD_5)_{eff} = S_e + 0.84(X_V)_{eff}f'$$

where

$(BOD_5)_{eff}$ = effluent BOD_5, mg/ℓ

S_e = effluent soluble BOD_5, 10 mg/ℓ

$(X_V)_{eff}$ = effluent volatile suspended solids, 20 mg/ℓ

f' = 0.53

$$(BOD_5)_{eff} = 10 + 0.84(20)0.53$$

$$\underline{(BOD_5)_{eff} = 19 \text{ mg/}\ell}$$

m. Determine nutrient requirement

for nitrogen

$$N = 0.123\Delta X_V$$

$$N = 0.123(1580)$$

$$\underline{N = 194 \text{ lb/day}}$$

for phosphorus

$$P = 0.026\Delta X_V$$

$$P = 0.026(1580)$$

$$\underline{P = 41 \text{ lb/day}}$$

N in influent = 30 mg/ℓ(Q_{avg})8.34

= 30(1.0)8.34

= 250 lb/day > 194 lb/day required

<u>N to be added = none</u>

P in influent = 15 mg/ℓ(Q_{avg})8.34

$= 15(1.0)8.34$

$= 125$ lb/day > 41 lb/day required

P to be added = none

7-25. Cost Data. Appropriate cost data and economic evaluation may be found in Chapter 8.

7-26. Bibliography.

a. American Public Health Association, American Society of Civil Engineers, American Water Works Association, and Water Pollution Control Federation, "Glossary, Water and Wastewater Control Engineering," 1969.

b. American Public Works Association, "Feasibility of Computer Control of Wastewater Treatment," Report No. 17090DOY, Dec 1970, U. S. Environmental Protection Agency, Washington, D. C.

c. American Society of Civil Engineers and the Water Pollution Control Federation, "Sewage Treatment Plant Design," Manual of Practice No. 8, 1959, 1961, 1967, and 1968, Water Pollution Control Federation, Washington, D. C.

d. Bargman, R. D. and Borgerding, J., "Characterization of the Activated Sludge Process," Report No. R2-73-224, Apr 1973, U. S. Environmental Protection Agency, Washington, D. C.

e. Burkhead, C. E., "Evaluation of CMAS Design Constants," Conference on Toward a Unified Concept of Biological Waste Treatment Design, 5-6 Oct 1972, Atlanta, Ga.

f. Burkhead, C. E. and McKinney, R. E., "Application of Complete-Mixing Activated Sludge Design Equations to Industrial Wastes," Journal, Water Pollution Control Federation, Vol 40, Apr 1968, pp 557-570.

g. Busch, A. W., Aerobic Biological Treatment of Wastewaters, Oligodynamics Press, 1971.

h. Center for Research, Inc., University of Kansas, "Oxygen Consumption in Continuous Biological Culture," Report No. 17050DJS, May 1971, U. S. Environmental Protection Agency, Washington, D. C.

i. City of Austin, Texas, "Design Guides for Biological Wastewater

Treatment Processes," Report No. 11010ESQ, Aug 1971, U. S. Environmental Protection Agency, Washington, D. C.

j. "Design and Operation of Complete Mixing Activated Sludge Systems," Environmental Pollution Control Service Reports, Vol 1, No 3, Jul 1970.

k. Eckenfelder, W. W., Jr., Industrial Water Pollution Control, McGraw-Hill, New York, 1966.

l. Eckenfelder, W. W., Jr., "General Concepts of Biological Treatment," Manual of Treatment Processes, Vol 1, 1969, Environmental Science Services, Inc., Briarcliff Manor, New York.

m. Eckenfelder, W. W., Jr., Water Quality Engineering for Practicing Engineers, Barnes and Nobel, New York, 1970.

n. Eckenfelder, W. W., Jr., "Activated Sludge and Extended Aeration," Process Design in Water Quality Engineering - New Concepts and Developments, 1971, Vanderbilt University, Nashville, Tenn.

o. Eckenfelder, W. W., Jr., and Ford, D. L., Water Pollution Control, Pemberton Press, New York, 1970.

p. Eckenfelder, W. W., Jr., and O'Connor, O. J., Biological Waste Treatment, Pergamon Press, New York, 1961.

q. Gaudy, A. G., Jr., and Gaudy, E. T., "Biological Concepts for Design and Operation of the Activated Sludge Process," Report No. 17090-FQJ, Sep 1971, U. S. Environmental Protection Agency, Washington, D. C.

r. Goodman, B. L., Design Handbook of Wastewater Systems: Domestic, Industrial, Commercial, Technomic, Westport, Conn., 1971.

s. Goodman, B. L. and Englande, A. J., Jr., "A Consolidated Approach to Activated Sludge Process Design," Conference on Toward a Unified Concept of Biological Waste Treatment Design, 5-6 Oct 1972, Atlanta, Ga.

t. Lawrence, A. W. and McCarty, P. L., "Unified Basis for Biological Treatment Design and Operation," Journal, Sanitary Engineering Division, American Society of Civil Engineers, Vol 96, SA3, 1970.

u. Maier, W. J., "Biological Removal of Colloidal Matter from

Wastewater," Report No. R2-73-147, Jun 1973, U. S. Environmental Protection Agency, Washington, D. C.

v. McKinney, R. E., "Mathematics of Complete-Mixing Activated Sludge," Journal, Sanitary Engineering Division, American Society of Civil Engineers, SA3, May 1962, pp 87-113.

w. McKinney, R. E., Microbiology for Sanitary Engineers, McGraw-Hill, New York, 1962.

x. McKinney, R. E. and Ooter, R. J., "Concepts of Complete Mixing Activated Sludge," Bulletin No. 60, 1969, Transactions of the 19th Annual Conference on Sanitary Engineering, University of Kansas, Lawrence, Kans.

y. Metcalf and Eddy, Inc., Wastewater Engineering; Collection, Treatment, and Disposal, McGraw-Hill, New York, 1972.

z. Okun, D. A., "System of Bio-Precipitation of Organic Matter from Sewage," Sewage Works Journal, Vol 21, No. 5, 1949, pp 763-794.

aa. Smith, H. S., "Homogeneous Activated Sludge and Principles and Features of the Activated Sludge Process," Water and Wastes Engineering, Vol 4, Jul 1967, pp 46-50.

bb. Smith, R. and Eilers, R. G., "A Generalized Computer Model for Steady-State Performance of the Activated Sludge Process," FWQA Report No. TWRC-15, Oct 1969, Robert A. Taft Water Research Center, Cincinnati, Ohio.

cc. Stensel, H. D. and Shell, G. L., "Two Methods of Biological Treatment Design," Journal, Water Pollution Control Federation, Vol 46, Feb 1974, pp 271-283.

dd. Stewart, M. J., "Activated Sludge System Variations - Specific Applications," The 15th Ontario Industrial Waste Conference, 9-12 Jun 1968, Niagara Falls, Ontario.

ee. Toerber, E. D., "Full Scale Parallel Activated Sludge Process Evaluation," Report No. R2-72-065, Nov 1972, U. S. Environmental Protection Agency, Washington, D. C.

ff. Weston, R. F., "Design of Sludge Reaeration Activated Sludge Systems," Journal, Water Pollution Control Federation, Vol 33, No. 7, 1961, pp 748-757.

Section V. STEP AERATION ACTIVATED SLUDGE

7-27. Background.

a. Step aeration is defined as "a procedure for adding increments of settled wastewater along the line of flow in the aeration tanks of an activated sludge plant" (para 7-34a). It is a modification of the activated sludge process in which an attempt is made to equalize the food-to-microorganism ratio (F/M). The first application of this process was at the Tallmans Island plant in New York City in 1939.

b. Baffles are used to split the aeration tank into four (or more) parallel channels. Each of these channels is a separate step and all channels are linked together in series (fig. 7-4).

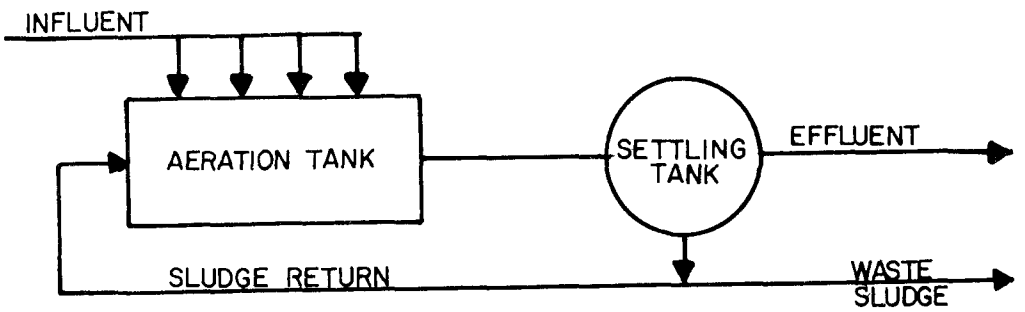

Figure 7-4. Step aeration activated sludge.

c. Flexibility of operation is a prime factor to consider in the design of the process. The oxygen demand is essentially uniform over the length of the basin, resulting in more efficient utilization of the oxygen supplied. Introduction of influent waste at multiple locations and return of a highly absorptive sludge floc permit this process to remove soluble organics within a relatively short contact time; therefore, it is characterized by higher volumetric loadings than the conventional plug flow activated sludge process.

d. References c, t, v, and y in paragraph 7-34 discuss the step aeration modification and enumerate the design parameters.

7-28. Input Data.

a. Wastewater Flow (Average and Peak). In case of high variability, a statistical distribution should be provided.

b. Wastewater Strength.

(1) BOD_5 (soluble and total), mg/ℓ.

(2) COD and/or TOC (maximum and minimum), mg/ℓ.

(3) Suspended solids, mg/ℓ.

(4) Volatile suspended solids (VSS), mg/ℓ.

(5) Nonbiodegradable fraction of VSS, mg/ℓ.

c. Other Characterization.

(1) pH.

(2) Acidity and/or alkalinity, mg/ℓ.

(3) Nitrogen,[1] mg/ℓ.

(4) Phosphorus (total and soluble), mg/ℓ.

(5) Oils and greases, mg/ℓ.

(6) Heavy metals, mg/ℓ.

(7) Toxic or special characteristics (e.g., phenols), mg/ℓ.

(8) Temperature, °F or °C.

d. Effluent Quality Requirements.

(1) BOD_5, mg/ℓ.

(2) SS, mg/ℓ.

(3) TKN, mg/ℓ.

(4) P, mg/ℓ.

---

[1] The form of nitrogen should be specified as to its biological availability (e.g., NH_3 or Kjeldahl).

(5) Total nitrogen (TKN + NO_3-N), mg/ℓ.

(6) Settleable solids, mg/ℓ/hr.

7-29. Design Parameters.

a. Reaction Rate Constants and Coefficients.

Constants	Range
McKinney	
K_m	15/hr at 20°C
K_s	10.4/hr at 20°C
K_e	0.02/hr at 20°C
Eckenfelder	
k	0.0007-0.002 ℓ/mg/hr
a	0.73
a'	0.52
b	0.075/day
b'	0.15/day
f	0.40
f'	0.53

b. F/M = (0.2-0.4).

c. Volumetric loading = 40-60.

d. t = (3-5) hr.

e. t_s = (3-7) days.

f. MLSS = (2000-3500) mg/ℓ.

g. MLVSS = (1400-2450) mg/ℓ.

h. Q_r/Q = (0.25-0.75).

i. lb O_2/lb $BOD_r \geq 1.25$.

j. lb solids/lb BOD_r = (0.5-0.7).

k. Θ = (1.0-1.04).

l. Efficiency = (>90 percent).

7-30. Design Procedure.

a. McKinney's Approach.

(1) Assume the following design parameters.

(a) Metabolism constant (K_m).

(b) Synthesis factor (K_s).

(c) Endogenous respiration factor (K_e).

(d) Temperature correction coefficient (Θ).

(e) Hydraulic detention time (t).

(2) Adjust the metabolism constant, the synthesis factor, and the endogenous rate of respiration for temperature.

$$K_T = K_{20}\Theta^{(T-20)}$$

where

K_T = rate constant at desired temperature, T , °C

K_{20} = rate constant at 20°C

Θ = temperature coefficient

T = temperature, °C.

(3) Determine size of the aeration tank.

$$V = Q_{avg}\left(\frac{t}{24}\right)$$

where

V = volume of tank, million gal

Q_{avg} = average flow, mgd

t = hydraulic detention time, hr

(4) Determine soluble effluent BOD_5.

$$F_e = \frac{F_i}{1 + K_m t}$$

where

F_e = soluble effluent BOD_5, mg/ℓ

F_i = influent BOD_5, mg/ℓ

K_m = metabolism constant (15/hr at 20°C)

t = hydraulic detention time, hr

and check $F_e \leq 10$ mg/ℓ . If $F_e > 10$, increase t and calculate new F_e .

(5) Calculate the MLSS concentration and check total mass against 2000-3500 mg/ℓ.

$$M_T = M_a + M_e + M_i + M_{ii}$$

$$M_a = \frac{K_s F_e}{K_e + 1/24\ t_s}$$

$$M_e = 0.2 K_e M_a t_s (24)$$

$$M_i = SS_i\left(\frac{24t_s}{t}\right)$$

$$M_{ii} = SS_{ii} \times \frac{24t_s}{t} + 0.1(M_a + M_e)$$

where

M_T = total mass, mg/ℓ

M_a = living active mass, mg/ℓ

M_e = endogenous mass, mg/ℓ

M_i = inert nonbiodegradable organic mass, mg/ℓ

M_{ii} = inert inorganic suspended solids, mg/ℓ

K_s = synthesis factor, 1/hr (10 - 4/hr at 20°C)

K_e = endogenous respiration factor, 1/hr (0.02/hr at 20°C)

t_s = solids retention time, days

SS_i = inert organic SS in influent, mg/ℓ

= VSS × percent nonbiodegradable

SS_{ii} = inert inorganic SS fraction in the influent

(6) Check organic loading against 0.2-0.4.

$$F/M = \frac{24F_i}{M_T t}$$

where

F/M = food-to-microorganism ratio

F_i = influent BOD_5, mg/ℓ

M_T = total mass, mg/ℓ

t = detention time, hr

If F/M < lower limit, it is possible to reduce t and recalculate M_T .
If F/M > upper limit, increase t and recalculate M_T .

(7) Calculate the oxygen requirements.

(a) Select oxygen uptake rate. The average rate of oxygen demand, if the waste load is uniform, is given by

$$\frac{dO}{dt} = \left[\frac{1.5(F_i - F_e)}{t}\right] - \left[\frac{1.42(M_a + M_e)}{24t_s}\right]$$

where

$\frac{dO}{dt}$ = average oxygen uptake rate, mg/ℓ/hr, under uniform flow conditions

F_i = influent BOD_5, mg/ℓ

F_e = effluent BOD_5, mg/ℓ

t = detention time, hr

M_a = living mass, mg/ℓ

M_e = endogenous mass, mg/ℓ

t_s = solids retention time, hr

Under conditions where the load varies, the oxygen uptake is equal to the synthesis oxygen demand plus the endogenous respiration oxygen demand or

$$\frac{dO}{dt} = \left[\frac{0.5(F_i - F_e)}{t}\right]\left(\frac{Q_p}{Q_{avg}}\right) + 1.14K_eM_a$$

where

Q_p = peak flow, mgd

Q_{avg} = average flow, mgd

K_e = endogenous respiration factor/hr

(b) Supply oxygen for peak hourly load.

$$O_2 = \frac{dO}{dt}(V)8.34$$

where

O_2 = oxygen required, lb/hr

$\frac{dO}{dt}$ = average oxygen uptake rate, mg/ℓ/hr, under uniform flow conditions

V = volume of the tank, gal

and check oxygen supplied per lb of BOD removed >1.25

$$\frac{\text{lb } O_2}{\text{lb BOD}_r} = \frac{O_2(24)}{(Q)(F_i - F_e)8.34}$$

where

O_2 = oxygen required, lb/hr

Q = flow, mgd

F_i = influent BOD_5, mg/ℓ

F_e = effluent BOD_5, mg/ℓ

(8) Design aeration system and check horsepower supply for mixing against horsepower required for mixing >0.1 hp/1000 gal.

(a) Diffused Aeration System.

1 Assume the following design parameters.

a Standard transfer efficiency, percent, from manufacturer (5-8 percent).

b O_2 transfer in waste/O_2 transfer in water ≈0.9.

c O_2 saturation in waste/O_2 saturation in water ≈0.9.

d Correction factor for pressure ≈1.0.

2 Select summer operating temperature (25-30°C) and determine (from standard tables) O_2 saturation.

3 Adjust standard transfer efficiency to operating conditions.

$$OTE = STE \frac{\left[(C_s)_T(\beta)(p) - C_L\right]}{9.17} \alpha(1.02)^{T-20}$$

where

OTE = operating transfer efficiency, percent

STE = standard transfer efficiency, percent

$(C_s)_T$ = O_2 saturation at selected summer temperature T , °C, mg/ℓ

β = O_2 saturation in waste/O_2 saturation in water ≈0.9

p = correction factor for pressure ≈1.0

C_L = minimum dissolved oxygen to be maintained in the basin ⩾ 2.0 mg/ℓ

α = O_2 transfer in waste/O_2 transfer in water ≈0.9

T = temperature, °C

4 Calculate required air flow.

$$R_a = \frac{O_2(10^5)(7.48)}{(OTE)0.0176\left(\frac{lb\ O_2}{ft^3\ air}\right)\left(1440\ \frac{min}{day}\right) V}$$

where

R_a = required air flow, cfm/1000 ft^3

O_2 = oxygen required, lb/day

OTE = operating transfer efficiency, percent

V = volume of basin, gal

(b) Mechanical Aeration System.

1 Assume the following design parameters.

a Standard transfer efficiency, lb/hp-hr (0 dissolved oxygen, 20°C, and tap water).

b O_2 transfer in waste/O_2 transfer in water ≈0.9.

c O_2 saturation in waste/O_2 saturation in water ≈0.9.

d Correction factor for pressure ≈1.0.

2 Select summer operating temperature (25-30°C) and determine (from standard tables) O_2 saturation.

3 Adjust standard transfer efficiency to operating conditions.

$$OTE = STE \frac{\left[(C_s)_T (\beta)(p) - C_L\right]}{9.17} \alpha(1.02)^{T-20}$$

where

OTE = operating transfer efficiency, lb O_2/hp-hr

STE = standard transfer efficiency, lb O_2/hp-hr

$(C_s)_T$ = O_2 saturation at selected summer temperature T , °C, mg/ℓ

β = O_2 saturation in waste/O_2 saturation in water ≈0.9

p = correction factor for pressure ≈1.0

C_L = minimum dissolved oxygen to be maintained in the basin ≥ 2.0 mg/ℓ

α = O_2 transfer in waste/O_2 transfer in water ≈0.9

T = temperature, °C

4 Calculate horsepower requirement.

$$hp = \frac{O_2}{\left(OTE \frac{lb\ O_2}{hp\text{-}hr}\right)(24)(V)} \times 1000$$

where

hp = horsepower required/1000 gal

O_2 = oxygen required, lb/day

OTE = operating transfer efficiency, lb O_2/hp-hr

V = volume of basin, gal

(9) Calculate sludge production and determine amount of sludge wasted per day.

$$\Delta M_T = \frac{M_T V(8.34)}{t_s}$$

where

ΔM_T = sludge produced, lb/day

M_T = total mass, mg/ℓ

V = volume of aeration tank, million gal

t_s = solids retention time, days

(10) Check solids produced per pound of BOD removed.

$$\left(\frac{lb\ solids}{lb\ BOD_r}\right) = \frac{\Delta M_T}{Q(F_i - F_e)(8.34)}$$

where

ΔM_T = sludge produced, lb/day

Q = flow, mgd

F_i = influent BOD_5, mg/ℓ

F_e = effluent BOD_5, mg/ℓ

(11) Calculate sludge recycle ratio.

$$\frac{Q_r}{Q} = \frac{M_T}{M_u - M_T}$$

where

Q_r = volume of recycled sludge, mgd

Q = flow, mgd

M_T = total mass, mg/ℓ

M_u = solids concentration in return sludge, mg/ℓ

(12) Calculate total effluent BOD.

$$\left(BOD_5\right)_{eff} = S_e + 0.84(SS)_{eff}\left(\frac{M_a}{M_T}\right)(0.76)$$

where

S_e = effluent soluble BOD_5, mg/ℓ

SS_{eff} = suspended solids in effluent, mg/ℓ

M_a = living mass, mg/ℓ

M_T = total mass, mg/ℓ

(13) Determine nutrient requirements for nitrogen

$$N = 0.123\Delta M_T (\text{or } X_V)$$

and phosphorus

$$P = 0.026\Delta M_T (\text{or } M_V)$$

where

ΔM_T = sludge produced, lb/day

ΔM_V = sludge produced, lb/day

and check against BOD:N:P = 100:5:1.

b. Eckenfelder's Approach.

(1) Assume the following design parameters when unknown.

(a) BOD removal rate constant (k).

(b) Fraction of BOD synthesized (a).

(c) Fraction of BOD oxidized for energy (a').

(d) Endogenous respiration rate (b and b').

(e) Mixed liquor suspended solids (MLSS).

(f) Mixed liquor volatile suspended solids (MLVSS).

(g) Food-to-microorganism ratio (F/M).

(h) Temperature correction coefficient (Θ).

(i) Nonbiodegradable fraction of VSS in influent (f).

(j) Degradable fraction of the MLVSS (f').

(2) Adjust BOD removal rate constant for temperature.

$$K_T = K_{20}\Theta^{(T-20)}$$

where

K_T = rate constant for desired temperature, °C

K_{20} = rate constant at 20°C

Θ = temperature correction coefficient

T = temperature, °C

(3) Determine size of the aeration tank by first determining the detention time.

$$t = \frac{24S_o}{(X_V)(F/M)}$$

where

t = detention time, hr

S_o = influent BOD, mg/ℓ

X_V = MLVSS, mg/ℓ

F/M = food-to-microorganism ratio

(4) Check detention time for treatability.

$$\frac{S_e}{S_o} = \frac{1}{1 + kX_V t}$$

where

S_e = BOD_5 soluble in effluent, mg/ℓ

S_o = BOD_5 in influent, mg/ℓ

k = BOD removal rate constant, ℓ/mg/hr

X_V = MLVSS, mg/ℓ

t = detention time, hr

and solve for t and compare with t in (3) above and select the larger.

(5) Calculate the volume of aeration tank.

$$V = Q_{avg}\left(\frac{t}{24}\right)$$

where

V = volume, million gal

Q_{avg} = average daily flow, mgd

t = detention time, hr

(6) Calculate oxygen requirements.

$$\frac{dO}{dt} = \frac{a'(S_r)}{t} + b'X_V$$

or

$$O_2 = a'(S_r)(Q_{avg})(8.34) + b'(X_V)(V)(8.34)$$

where

$\frac{dO}{dt}$ = oxygen uptake rate, mg/ℓ/hr

a' = fraction of BOD oxidized for energy

S_r = BOD removed $(S_o - S_e)$

t = detention time, hr

b' = endogenous respiration rate, ℓ/hr

X_V = MLVSS

O_2 = oxygen requirement, lb/day

Q_{avg} = average flow rate, mgd

V = volume of aeration tank, million gal

and check the oxygen supplied against ≥1.25.

$$\text{lb } O_2/\text{lb BOD}_r = \frac{O_2}{Q(S_r)(8.34)}$$

where

O_2 = oxygen required, lb/day

Q = flow, mgd

S_r = BOD removed, mg/ℓ

(7) Design aeration system.

(a) Diffused Aeration System.

1 Assume the following design parameters.

a Standard transfer efficiency, percent, from manufacturer (5-8 percent).

b O_2 transfer in waste/O_2 transfer in water ≈0.9.

c O_2 saturation in waste/O_2 saturation in water ≈0.9.

d Correction factor for pressure ≈1.0.

2 Select summer operating temperature (25-30°C) and determine (from standard tables) O_2 saturation.

3 Adjust standard transfer efficiency to operating conditions.

$$OTE = STE \frac{\left[(C_s)_T(\beta)(p) - C_L\right]}{9.17} \alpha(1.02)^{T-20}$$

where

OTE = operating transfer efficiency, percent

STE = standard transfer efficiency, percent

$(C_s)_T$ = O_2 saturation at selected summer temperature T, °C, mg/ℓ

β = O_2 saturation in waste/O_2 saturation in water ≈0.9

p = correction factor for pressure ≈1.0

C_L = minimum dissolved oxygen to be maintained in the basin $\geqslant 2.0$ mg/ℓ

T = temperature, °C

α = O_2 transfer in waste/O_2 transfer in water ≈ 0.9

4 Calculate required air flow.

$$R_a = \frac{O_2(10^5)(7.48)}{(OTE)0.0176\left(\frac{lb\ O_2}{ft^3\ air}\right)\left(1440\ \frac{min}{day}\right) V}$$

where

R_a = required air flow, cfm/1000 ft^3

O_2 = oxygen required, lb/day

OTE = operating transfer efficiency, percent

V = volume of basin, gal

(b) Mechanical Aeration System.

1 Assume the following design parameters.

a Standard transfer efficiency, lb/hp-hr (0 dissolved oxygen, 20°C, and tap water).

b O_2 transfer in waste/O_2 transfer in water ≈ 0.9.

c O_2 saturation in waste/O_2 saturation in water ≈ 0.9.

d Correction factor for pressure ≈ 1.0.

2 Select summer operating temperature (25-30°C) and determine (from standard tables) O_2 saturation.

3 Adjust standard transfer efficiency to operating conditions.

$$OTE = STE \frac{\left[(C_s)_T(\beta)(p) - C_L\right]}{9.17} \alpha(1.02)^{T-20}$$

where

OTE = operating transfer efficiency, lb O_2/hp-hr

STE = standard transfer efficiency, lb O_2/hp-hr

$(C_s)_T$ = O_2 saturation at selected summer temperature T, °C, mg/ℓ

β = O_2 saturation in waste/O_2 saturation in water ≈0.9

p = correction factor for pressure ≈1.0

C_L = minimum dissolved oxygen to be maintained in the basin ⩾ 2.0 mg/ℓ

α = O_2 transfer in waste/O_2 transfer in water ≈0.9

T = temperature, °C

4 Calculate horsepower requirement.

$$hp = \frac{O_2}{\left(OTE \frac{lb\ O_2}{hp\text{-}hr}\right)(24)(V)} \times 1000$$

where

hp = horsepower required/1000 gal

O_2 = oxgen required, lb/day

OTE = operating transfer efficiency, lb O_2/hp-hr

V = volume of basin, gal

(8) Calculate sludge production.

$$\Delta X_V = [aS_rQ_{avg} - bX_V(V) + fQ(VSS) + Q(SS - VSS)](8.34)$$

where

ΔX_V = sludge produced, lb/day

a = fraction of BOD removed synthesized to cell material

S_r = BOD removed, mg/ℓ

Q_{avg} = average flow, mgd

b = endogenous respiration rate, 1/day

X_V = volatile solids in raw waste, mg/ℓ

V = volume of tank, gal

f = nonbiodegradable fraction of influent VSS

Q = flow, mgd

VSS = volatile suspended solids in effluent, mg/ℓ

SS = suspended solids in influent, mg/ℓ

(9) Check ΔX_V against 0.5-0.7.

$$\frac{\text{lb/solids}}{(\text{lb BOD}_r)} = \frac{\Delta X_V}{S_r(Q)(8.34)}$$

where

ΔX_V = sludge produced, lb/day

S_r = BOD removed, mg/ℓ

Q = flow, mgd

(10) Calculate sludge recycle ratio.

$$\frac{Q_r}{Q} = \frac{X_a}{X_u - X_a}$$

where

Q_r = volume of recycled sludge, mgd

Q = flow, mgd

X_a = MLSS, mg/ℓ

X_u = suspended solids concentration in returned sludge, mg/ℓ

(11) Calculate solids retention time.

$$SRT = \frac{(V)(X_a)(8.34)}{\Delta X_a}$$

where

SRT = solids retention time, days

V = volume of basin, gal

X_a = MLSS, mg/ℓ

$$\Delta X_a = \frac{\Delta X_V}{\% \text{ volatile}}$$

ΔX_a = sludge produced, lb/day

ΔX_V = sludge produced, lb/day

(12) Calculate effluent BOD_5.

$$\left(BOD_5\right)_{eff} = S_e + 0.84(VSS)_{eff}(f')$$

where

S_e = effluent soluble BOD_5, mg/ℓ

VSS_{eff} = effluent volatile suspended solids, mg/ℓ

f' = degradable fraction of MLVSS

(13) Determine nutrient requirements

for nitrogen

$$N = 0.123\Delta M_T \text{ (or } \Delta X_V)$$

and phosphorus

$$P = 0.026\Delta M_T \text{ (or } \Delta X_V)$$

where

ΔM_T = sludge produced, lb/day

ΔX_V = sludge produced, lb/day

and check against BOD:N:P = 100:5:1.

7-31. Output Data.

a. Aeration Tank.

(1) Reaction rate constant, ℓ/mg/hr.

(2) Sludge produced per BOD removed.

(3) Endogenous respiration rate (b, b').

(4) O_2 utilized per BOD removed.

(5) Influent nonbiodegradable BSS (f).

(6) Effluent degradable VSS (f').

(7) lb BOD/lb MLSS-day (F/M ratio).

(8) Mixed liquor SS, mg/ℓ (MLSS).

(9) Mixed liquor VSS, mg/ℓ (MLVSS).

(10) Aeration time, hr.

(11) Volume of aeration tank, million gal.

(12) Oxygen required, lb/day.

(13) Sludge produced, lb/day.

(14) Nitrogen requirement, lb/day.

(15) Phosphorus requirement, lb/day.

(16) Sludge recycle ratio, percent.

(17) Solids retention time, days.

b. Diffused Aeration System.

(1) Standard transfer efficiency, percent.

(2) Operating transfer efficiency, percent.

(3) Required air flow, cfm/1000 ft^3.

c. Mechanical Aeration System.

(1) Standard transfer efficiency, lb O_2/hp-hr.

(2) Operating transfer efficiency, lb O_2/hp-hr.

(3) Horsepower required.

7-32. Example Calculations. The design procedure for a step aeration activated sludge system is the same as that for a complete mix activated sludge system. Example calculations are shown in paragraph 7-24, and therefore will not be repeated here.

7-33. Cost Data. Appropriate cost data and economic evaluation may be found in Chapter 8.

7-34. Bibliography.

a. American Public Health Association, American Society of Civil Engineers, American Water Works Association, and Water Pollution Control Federation, "Glossary, Water and Wastewater Control Engineering," 1969.

b. American Public Works Association, "Feasibility of Computer Control of Wastewater Treatment," Report No. 17090DOY, Dec 1970, U. S. Environmental Protection Agency, Washington, D. C.

c. American Society of Civil Engineers and the Water Pollution Control Federation, "Sewage Treatment Plant Design," Manual of Practice No. 8, 1959, 1961, 1967, and 1968, Water Pollution Control Federation, Washington, D. C.

d. Bargman, R. D. and Borgerding, J., "Characterization of the Activated Sludge Process," Report No. R2-73-224, Apr 1973, U. S. Environmental Protection Agency, Washington, D. C.

e. Busch, A. W., Aerobic Biological Treatment of Wastewaters, Oligodynamics Press, 1971.

f. Center for Research, Inc., University of Kansas, "Oxygen Consumption in Continuous Biological Culture," Report No. 17050DJS, May 1971, U. S. Environmental Protection Agency, Washington, D. C.

g. City of Austin, Texas, "Design Guides for Biological Wastewater Treatment Processes," Report No. 11010ESQ, Aug 1971, U. S. Environmental Protection Agency, Washington, D. C.

h. Eckenfelder, W. W., Jr., Industrial Water Pollution Control, McGraw-Hill, New York, 1966.

i. Eckenfelder, W. W., Jr., "General Concepts of Biological Treatment," Manual of Treatment Processes, Vol 1, 1969, Environmental Science Services, Inc., Briarcliff Manor, New York.

j. Eckenfelder, W. W., Jr., Water Quality Engineering for Practicing Engineers, Barnes and Nobel, New York, 1970.

k. Eckenfelder, W. W., Jr., "Activated Sludge and Extended Aeration," Process Design in Water Quality Engineering - New Concepts and Developments, 1971, Vanderbilt University, Nashville, Tenn.

l. Eckenfelder, W. W., Jr., and Ford, D. L., Water Pollution Control, Pemberton Press, New York, 1970.

m. Eckenfelder, W. W., Jr., and O'Connor, O. J., Biological Waste Treatment, Pergamon Press, New York, 1961.

n. Gaudy, A. G., Jr., and Gaudy, E. T., "Biological Concepts for Design and Operation of the Activated Sludge Process," Report No. 17090-FQJ, Sep 1971, U. S. Environmental Protection Agency, Washington, D. C.

o. Goodman, B. L., Design Handbook of Wastewater Systems: Domestic, Industrial, Commerical, Technomic, Westport, Conn., 1971.

p. Goodman, B. L. and Englande, A. J., Jr., "A Consolidated Approach to Activated Sludge Process Design," Conference on Toward a Unified Concept of Biological Waste Treatment Design, 5-6 Oct 1972, Atlanta, Ga.

q. Lawrence, A. W. and McCarty, P. L., "Unified Basis for Biological Treatment Design and Operation," Journal, Sanitary Engineering Division, American Society of Civil Engineers, Vol 96, SA3, 1970.

r. Maier, W. J., "Biological Removal of Colloidal Matter from Wastewater," Report No. R2-73-147, Jun 1973, U. S. Environmental Protection Agency, Washington, D. C.

s. McKinney, R. E., Microbiology for Sanitary Engineers, McGraw-Hill, New York, 1962.

t. Metcalf and Eddy, Inc., Wastewater Engineering; Collection, Treatment, and Disposal, McGraw-Hill, New York, 1972.

u. Okun, D. A., "System of Bio-Precipitation of Organic Matter from Sewage," Sewage Works Journal, Vol 21, No. 5, 1949, pp 763-794.

v. Smith, H. S., "Homogeneous Activated Sludge and Principles and Features of the Activated Sludge Process," Water and Wastes Engineering, Vol 4, Jul 1967, pp 46-50.

w. Smith, R. and Eilers, R. G., "A Generalized Computer Model for Steady-State Performance of the Activated Sludge Process," FWQA Report No. TWRC-15, Oct 1969, Robert A. Taft Water Research Center, Cincinnati, Ohio.

x. Stensel, H. D. and Shell, G. L., "Two Methods of Biological Treatment Design," Journal, Water Pollution Control Federation, Vol 46, Feb 1974, pp 271-283.

y. Stewart, M. J., "Activated Sludge System Variations - Specific Applications," The 15th Ontario Industrial Waste Conference, 9-12 Jun 1968, Niagara Falls, Ontario.

z. Toerber, E. D., "Full Scale Parallel Activated Sludge Process Evaluation," Report No. R2-72-065, Nov 1972, U. S. Environmental Protection Agency, Washington, D. C.

aa. Weston, R. F., "Design of Sludge Reaeration Activated Sludge Systems," Journal, Water Pollution Control Federation, Vol 33, No. 7, 1961, pp 748-757.

(next page is 7-95)

Section VI. EXTENDED AERATION ACTIVATED SLUDGE

7-35. Background.

a. The extended aeration process is defined as "a modification of the activated sludge process which provides for aerobic sludge digestion within the aeration system. The concept envisages the stabilization of organic matter under aerobic conditions and disposal of the end products into the air as gases and with the plant effluent as finely divided suspended matter and soluble matter" (para 7-42a). The process operates in the endogenous respiration phase which requires a relatively small F/M ratio and long detention time. In the process, the aeration detention time is determined by the time required to oxidize the solids produced by synthesis from the BOD removed. The accumulation of volatile solids is very low and approaches the theoretical minimum; however, since some of the biological solids are inert, an accumulation of solids occurs in the system. Sludge storage facilities should be provided; most states make it a requirement. The flow chart for the extended aeration process is identical to that for plug flow (fig. 7-5).

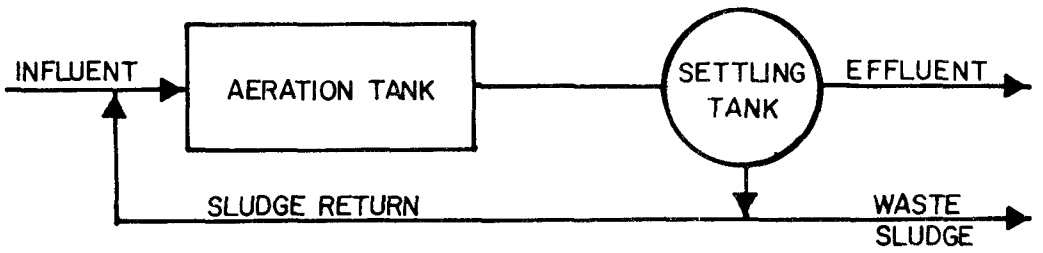

Figure 7-5. Plug flow activated sludge.

b. Process design parameters and excellent design examples are found in References c, h, o, u, w, and z in paragraph 7-42.

7-36. Input Data.

a. Wastewater Flow (Average and Peak). In case of high variability, a statistical distribution should be provided.

b. Wastewater Strength.

(1) BOD_5 (soluble and total), mg/ℓ.

(2) COD and/or TOC (maximum and minimum), mg/ℓ.

(3) Suspended solids, mg/ℓ.

(4) Volatile suspended solids (VSS), mg/ℓ.

(5) Nonbiodegradable fraction of VSS, mg/ℓ.

c. Other Characterization.

(1) pH.

(2) Acidity and/or alkalinity, mg/ℓ.

(3) Nitrogen,[1] mg/ℓ.

(4) Phosphorus (total and soluble), mg/ℓ.

(5) Oils and greases, mg/ℓ.

(6) Heavy metals, mg/ℓ.

(7) Toxic or special characteristics (e.g., phenols), mg/ℓ.

(8) Temperature, °F or °C.

d. Effluent Quality Requirements.

(1) BOD_5, mg/ℓ.

(2) SS, mg/ℓ.

(3) TKN, mg/ℓ.

(4) P, mg/ℓ.

7-37. Design Parameters.

a. Reaction rate constants.

---

[1] The form of nitrogen should be specified as to its biological availability (e.g., NH_3 or Kjeldahl).

Constants	Range
McKinney	
K_m	15/hr at 20°C
K_s	10.4/hr at 20°C
K_e	0.02/hr at 20°C
Eckenfelder	
k	0.0007-0.002 ℓ/mg/hr
a	0.73
a'	0.52
b	0.075/day
b'	0.15/day
a_0	0.77a = 0.56
f	0.40
f'	0.53

b. F/M = (0.05-0.15).

c. Volumetric loading = 10-25.

d. t = (18-36) hr.

e. t_s = (20-30) days.

f. MLSS = (3000-6000) mg/ℓ.

g. MLVSS = (2100-4200) mg/ℓ.

h. Q_r/Q = (0.75-1.5).

i. lb O_2/lb $BOD_r \geq 1.5$.

j. lb solids/lb $BOD_r \leq 0.2$.

k. $\Theta = (1.0\text{-}1.03)$.

l. Efficiency = (>90 percent).

7-38. Design Procedure.

a. McKinney's Approach.

(1) Assume the following design parameters.

(a) Metabolism constant (K_m).

(b) Synthesis factor (K_s).

(c) Endogenous respiration factor (K_e).

(d) Temperature correction coefficient (Θ).

(e) Hydraulic detention time (t), min.

(f) Solids retention time (t_s), days.

(2) Adjust the metobolism constant, synthesis factor, and endogenous rate of respiration for temperature.

$$K_T = K_{20}\Theta^{(T-20)}$$

where

K_T = rate constant at desired temperature

K_{20} = rate constant at 20°C

Θ = temperature coefficient

T = temperature, °C

(3) Determine the size of the aeration tank.

$$V = Q_{avg}\left(\frac{t}{24}\right)$$

where

V = volume of tank, million gal

$Q_{avg.}$ = average flow, mgd

t = hydraulic detention time, hr

(4) Determine soluble effluent BOD_5.

$$F_e = \frac{F_i}{1 + K_m t}$$

where

F_e = soluble effluent BOD_5, mg/ℓ

F_i = influent BOD_5, mg/ℓ

K_m = metabolism constant, 15/hr at 20°C

and check $F_e \geq 10$ mg/ℓ ; if $F_e > 10$ mg/ℓ increase t and calculate new F_e .

(5) Calculate the MLSS concentration and check M_T against 3000-6000 mg/ℓ.

$$M_T = M_a + M_e + M_i + M_{ii}$$

$$M_a = \frac{K_s F_e}{K_e + \frac{1}{24t_s}}$$

$$M_e = 0.2K_e' M_a t_s (24)$$

$$M_i = SS_i \times \frac{24t_s}{t}$$

$$M_{ii} = SS_{ii} \times \frac{24t_s}{t} + 0.1\ (M_a + M_e)$$

where

M_T = total mass, mg/ℓ

M_a = living active mass, mg/ℓ

M_e = endogenous mass, mg/ℓ

M_i = inert nonbiodegradable organic mass, mg/ℓ

M_{ii} = inert inorganic suspended solids, mg/ℓ

K_s = synthesis factor, 1/hr (10.4/hr at 20°C)

K_e = endogenous respiration factor, 1/hr (0.02/hr at 20°C)

t_s = solids retention time, days

SS_i = inert organic suspended solids in influent

= VSS × % nonbiodegradable (0.4 × VSS for municipal waste)

SS_{ii} = inert inorganic suspended solids fraction in the influent

(6) Check organic loading against 0.05-0.15.

$$F/M = \frac{24F_i}{M_T t}$$

where

F/M = food-to-microorganism ratio

F_i = influent BOD_5, mg/ℓ

M_T = total mass, mg/ℓ

t = retention time, min

If F/M < lower limit, it is possible to reduce t and recalculate M_T.
If F/M > upper limit, increase t and recalculate M_T

(7) Calculate the oxygen requirements.

(a) Select the oxygen uptake rate. The average rate of oxygen demand, if the waste load is uniform, is given by

$$\frac{dO}{dt} = \frac{1.5(F_i - F_e)}{t} - \frac{1.42(M_a + M_e)}{24t_s}$$

where

dO/dt = average oxygen uptake rate, mg/ℓ/hr, under uniform flow conditions

F_i = influent BOD_5, mg/ℓ

F_e = effluent BOD_5, mg/ℓ

t = detention time, days

M_a = living mass, mg/ℓ

M_e = endogenous mass, mg/ℓ

t_s = solids retention time, days

Under conditions where the load varies, the oxygen uptake is equal to the synthesis oxygen demand plus the endogenous respiration oxygen demand or

$$\frac{dO}{dt} = \frac{0.5(F_i - F_e)}{t}\left(\frac{Q_p}{Q_{avg}}\right) + 1.14K_eM_a$$

$$O_2 = \frac{dO}{dt} \times V \times 8.34$$

where

Q_p = peak flow, mgd

Q_{avg} = average flow, mgd

K_e = endogenous respiration factor, 1/hr

O_2 = oxygen required, lb/hr

V = volume of basin, gal

(b) Check oxygen supplied per pound of BOD removed $\geq$ 1.5.

$$\frac{\text{lb } O_2}{\text{lb BOD}_r} = \frac{O_2(24)}{Q(F_i - F_e)(8.34)}$$

(8) Design aeration system and check horsepower supply for complete mixing against horsepower required for complete mixing $\geq$ 0.1 hp/1000 gal.

(a) Diffused aeration system.

1 Assume the following design parameters.

a Standard transfer efficiency, percent, from manufacturer (5-8 percent).

b O_2 transfer in waste/O_2 transfer in water $\approx$0.9.

c O_2 saturation in waste/O_2 saturation in water $\approx$0.9.

d Correction factor for pressure $\approx$1.0.

2 Select summer operating temperature (25-30°C) and determine (from standard tables) O_2 saturation.

3 Adjust standard transfer efficiency to operating conditions.

$$\text{OTE} = \text{STE}\ \frac{\left[(C_s)_T(\beta)(p) - C_L\right]}{9.17}\ \alpha(1.02)^{T-20}$$

where

OTE = operating transfer efficiency, percent

STE = standard transfer efficiency, percent

$(C_s)_T$ = O_2 saturation at selected summer temperature T , °C , mg/ℓ

β = O_2 saturation in waste/O_2 saturation in water $\approx$0.9.

p = correction factor for pressure $\approx$1.0.

C_L = minimum dissolved oxygen to be maintained in the basin $\geqslant$ 2.0 mg/ℓ

α = O_2 transfer in waste/O_2 saturation in water $\approx$0.9

T = temperature, °C

4 Calculate required air flow.

$$R_a = \frac{O_2(10^5)(7.48)}{(OTE)\left(0.0176 \frac{lb\ O_2}{ft^3\ air}\right)\left(1440 \frac{min}{day}\right) V}$$

where

R_a = required air flow, cfm/1000 ft^3

O_2 = oxygen required, lb/day

OTE = operating transfer efficiency, percent

V = volume of basin, gal

(b) Mechanical aeration system.

1 Assume the following design parameters.

a Standard transfer efficiency, lb/hp-hr (0 dissolved oxygen, 20°C, and tap water).

b O_2 transfer in waste/O_2 transfer in water $\approx$0.9.

c O_2 saturation in waste/O_2 saturation in water $\approx$0.9.

d Correction factor for pressure $\approx$1.0.

2 Select summer operating temperature (25-30°C) and determine (from standard tables) O_2 saturation.

3 Adjust standard transfer efficiency to operating conditions.

$$OTE = STE \frac{\left[(C_s)_T (\beta)(p) - C_L\right]}{9.17} \alpha(1.02)^{T-20}$$

where

OTE = operating transfer efficiency, lb O_2/hp-hr

STE = standard transfer efficiency, lb O_2/hp-hr

$(C_s)_T$ = O_2 saturation at selected summer temperature T, °C, mg/ℓ

β = O_2 saturation in waste/O_2 saturation in water ≈0.9

p = correction factor for pressure ≈1.0

C_L = minimum dissolved oxygen to be maintained in the basin ⩾ 2.0 mg/ℓ

α = O_2 transfer in waste/O_2 transfer in water ≈0.9

T = temperature, °C

4 Calculate horsepower requirement.

$$hp = \frac{O_2}{\left(OTE \frac{lb\ O_2}{hp\text{-}hr}\right)(24)(V)} \times 1000$$

where

hp = horsepower required/1000 gal

O_2 = oxygen required, lb/day

OTE = operating transfer efficiency, lb O_2/hp-hr

V = volume of basin, gal

(9) Calculate sludge production and determine pounds of sludge wasted per day.

$$\Delta M_T = \frac{M_T V(8.34)}{t_s}$$

where

ΔM_T = sludge produced, lb/day

M_T = total mass, mg/ℓ

V = volume of aeration tank, million gal

t_s = solids retention time, days

(10) Check solids produced per pounds of BOD removed.

$$\frac{\text{lb solids}}{\text{lb BOD}_r} = \frac{\Delta M_T}{Q(F_i - F_e)(8.34)}$$

(11) Calculate sludge recycle ratio.

$$\frac{Q_r}{Q} = \frac{M_T}{M_u - M_T}$$

where

M_u = solids concentration in return sludge, mg/ℓ

(12) Calculate total effluent BOD_5.

$$(BOD_5) = S_e + (0.84)(SS)_{eff}\left(\frac{M_a}{M_T}\right)(0.76)$$

where

S_e = effluent soluble BOD_5, mg/ℓ

$(SS)_{eff}$ = suspended solids in effluent, mg/ℓ

M_a = living mass, mg/ℓ

M_T = MLSS, mg/ℓ

b. Eckenfelder's Approach.

(1) Assume the following design parameters when known.

(a) Fraction of BOD synthesized (a).

(b) Fraction of BOD oxidized for energy (a').

(c) Endogenous respiration rate (b and b').

(d) Fraction of BOD_5 synthesized to degradable solids (a_o).

(e) Nonbiodegradable fraction to VSS in influent (f).

(f) Mixed liquor suspended solids (MLSS).

(g) Volatile solids in mixed liquor suspended solids (MLVSS).

(h) Temperature correction coefficient (θ).

(i) Degradable fraction of the MLVSS (f').

(j) Food-to-microorganism ratio (F/M).

(k) Effluent soluble BOD_5 (S_e).

(2) Adjust the BOD removal rate constant for temperature.

$$K_T = K_{20}\theta^{(T-20)}$$

where

K_T = rate constant for desired temperature

K_{20} = rate constant at 20°C

θ = temperature correction coefficient

T = temperature, °C

(3) Determine the size of the aeration tank.

$$V = \frac{a_o(S_o - S_e)Q_{avg}}{(X_V)(f')(b)}$$

where

V = aeration tank volume, million gal

a_o = fraction of BOD_5 synthesized to degradable solids

S_o = influent BOD_5, mg/ℓ

S_e = effluent soluble BOD_5, mg/ℓ

Q_{avg} = waste flow, mgd

X_V = MLVSS, mg/ℓ

f' = degradable fraction of the MLVSS

b = endogenous respiration rate, 1/day

(4) Calculate the detention time.

$$t = \frac{V}{Q} 24$$

where

t = detention time, hr

V = volume, million gal

Q = flow, mgd

(5) Assume the organic loading and calculate detention time.

$$t = \frac{24S_o}{X_V \frac{F}{M}}$$

where

t = detention time, days

S_o = influent BOD_5, mg/ℓ

X_V = volatile solids in raw sludge, mg/ℓ

F/M = organic loading (food-to-microorganism ratio)

and select the larger of two detention times from (4) or (5).

(6) Determine the oxygen requirements allowing 60 percent for nitrification during summer.

$$O_2 = a'S_rQ_{avg}(8.34) + b'X_VV(8.34) + 0.6(4.57)(TKN)(Q_{avg})8.34$$

where

O_2 = oxygen required, lb/day

a' = fraction of BOD oxidized for energy

S_r = BOD_5 removed, mg/ℓ

Q_{avg} = average waste flow, mgd

b' = endogenous respiration rate, 1/day

X_V = MLVSS, mg/ℓ

V = aeration tank volume, million gal

TKN = total Kjeldahl nitrogen, mg/ℓ

and calculate oxygen requirement ($\geq$1.5)

$$\frac{\text{lb } O_2}{\text{lb } BOD_r} = \frac{O_2}{(Q)(S_r)(8.34)}$$

where

O_2 = oxygen required, lb/day

Q = waste flow, mgd

S_r = BOD_5 removed, mg/ℓ

(7) Design aeration system and check horsepower supply for complete mixing against horsepower required for complete mixing $\geq$0.1 hp/1000 gal.

(a) Diffused aeration system.

1 Assume the following design parameters.

a Standard transfer efficiency, percent, from manufacturer (5-8 percent).

b O_2 transfer in waste/O_2 transfer in water $\approx$0.9.

c O_2 saturation in waste/O_2 saturation in water $\approx$0.9.

d Correction factor for pressure $\approx$1.0.

2 Select summer operating temperature (25-30°C) and determine (from standard tables) O_2 saturation.

3 Adjust standard transfer efficiency to operating conditions.

$$OTE = STE \frac{\left[(C_s)_T (\beta)(p) - C_L\right]}{9.17} \alpha(1.02)^{T-20}$$

where

OTE = operating transfer efficiency, percent

STE = standard transfer efficiency, percent

$(C_s)_T$ = O_2 saturation at selected summer temperature T, °C, mg/ℓ

β = O_2 saturation in waste/O_2 saturation in water $\approx$0.9

p = correction factor for pressure $\approx$1.0

C_L = minimum dissolved oxygen to be maintained in the basin $\geqslant$ 2.0 mg/ℓ

α = O_2 transfer in waste/O_2 transfer in water $\approx$0.9

T = temperature, °C

4 Calculate required air flow.

$$R_a = \frac{O_2(10^5)(7.48)}{(OTE)\left(0.0176\ \frac{lb\ O_2}{ft^3\ air}\right)\left(1440\ \frac{min}{day}\right)V}$$

where

R_a = required air flow, cfm/1000 ft^3

O_2 = oxygen required, lb/day

OTE = operating transfer efficiency, percent

V = volume of basin, gal

(b) Mechanical aeration system.

1 Assume the following design parameters.

a Standard transfer efficiency, lb/hp-hr (0 dissolved oxygen, 20°C, and tap water).

b O_2 transfer in waste/O_2 transfer in water ≈0.9.

c O_2 saturation in waste/O_2 saturation in water ≈0.9.

d Correction factor for pressure ≈1.0.

2 Select summer operating temperature (25-30°C) and determine (from standard tables) O_2 saturation.

3 Adjust standard transfer efficiency to operating conditions.

$$OTE = STE\ \frac{\left[(C_s)_T(\beta)(p) - C_L\right]}{9.17}\ \alpha(1.02)^{T-20}$$

where

OTE = operating transfer efficiency, lb O_2/hp-hr

STE = standard transfer efficiency, lb O_2/hp-hr

$(C_s)_T$ = O_2 saturation at selected summer temperature T, °C, mg/ℓ

β = O_2 saturation in waste/O_2 saturation in water ≈ 0.9

p = correction factor for pressure ≈ 1.0

C_L = minimum dissolved oxygen to be maintained in the basin $\geqslant 2.0$ mg/ℓ

α = O_2 transfer in waste/O_2 transfer in water ≈ 0.9

T = temperature, °C

4 Calculate horsepower requirement.

$$hp = \frac{O_2}{\left(OTE \frac{lb\ O_2}{hp\text{-}hr}\right)(24)(V)} \times 1000$$

where

hp = horsepower required/1000 gal

O_2 = oxygen required, lb/day

OTE = operating transfer efficiency, lb O_2/hp-hr

V = volume of basin, gal

5 Calculate sludge production.

$$\Delta X_V = 8.34[a(S_r)(Q) - (b)(X_V)(V) - Q(SS_{eff}) + Q(VSS)f' + Q(SS - VSS)]$$

where

ΔX_V = volatile sludge produced, lb/day

a = fraction of BOD synthesized

S_r = BOD_5 removed, mg/ℓ

Q = waste flow, mgd

b = endogenous respiration rate, 1/day

X_V = volatile solids in raw sludge, mg/ℓ

V = aeration tank volume, million gal

SS_{eff} = effluent suspended solids, mg/ℓ

VSS = volatile suspended solids in influent, mg/ℓ

f' = degradable fraction of the MLVSS

VSS = volatile suspended solids, mg/ℓ

6 Calculate solids produced per pound of BOD removed.

$$\frac{\text{lb solids}}{\text{lb BOD}_r} = \frac{\Delta X_V}{Q(S_o - S_e)8.34}$$

where

ΔX_V = volatile sludge produced, lb/day

Q = waste flow, mgd

S_o = influent BOD_5, mg/ℓ

S_e = effluent soluble BOD_5, mg/ℓ

7 Calculate the solids retention time.

$$t_s = \frac{X_a(V)(8.34)}{\Delta X_V}$$

where

t_s = solids retention time, days

X_a = MLSS, mg/ℓ

V = volume of aeration tank, million gal

ΔX_V = volatile sludge produced, lb/day

8 Determine the effluent soluble BOD_5.

$$\frac{S_e}{S_o} = \frac{1}{1 + kX_V t}$$

where

S_e = soluble effluent BOD, mg/ℓ

S_o = influent BOD, mg/ℓ

k = rate constant, 1/mg/hr

X_V = MLVSS, mg/ℓ

t = aeration time, hr

9 Calculate sludge recycle ratio.

$$\frac{Q_r}{Q_{avg}} = \frac{X_a}{X_u - X_a}$$

where

Q_r = volume of recycled sludge, mgd

Q_{avg} = average flow, mgd

X_a = MLSS, mg/ℓ

X_u = suspended solids concentration in returned sludge, mg/ℓ

10 Calculate the nutrient requirements for nitrogen

$$N = 0.123\Delta X_V$$

and phosphorus

$$P = 0.026\Delta X_V$$

where

ΔX_V = sludge produced, lb/day

7-39. Output Data.

a. Aeration Tank.

(1) Reaction rate constant, 1/mg/hr.

(2) Sludge produced per BOD removed.

(3) Endogenous respiration rate (b, b').

(4) O_2 utilized per BOD removed.

(5) Influent nonbiodegradable VSS, mg/ℓ.

(6) Effluent degradable VSS, mg/ℓ.

(7) lb BOD/lb MLSS-day (F/M).

(8) Mixed liquor SS, mg/ℓ (MLSS).

(9) Mixed liquor VSS, mg/ℓ (MLVSS).

(10) Aeration time, hr.

(11) Volume of aeration tank, million gal.

(12) Oxygen required, lb/day.

(13) Sludge produced, lb/day.

(14) Nitrogen requirement, lb/day.

(15) Phosphorus requirement, lb/day.

(16) Sludge recycle ratio, percent.

(17) Solids retention time, days.

b. Diffused Aeration System

(1) Standard transfer efficiency, percent.

(2) Operating transfer efficiency, percent.

(3) Required air flow, cfm/1000 ft^3

c. Mechanical Aeration System.

(1) Standard transfer efficiency, lb O_2/hp-hr.

(2) Operating transfer efficiency, lb O_2/hp-hr.

(3) Horsepower required.

7-40. Example Calculations (Eckenfelder's Approach).

a. Assume the following design parameters.

(1) $a = 0.73$

(2) $a' = 0.52$

(3) $b = 0.075$/day, $b' = 0.15$/day

(4) $a_o = 0.56$

(5) $f = 0.40$

(6) MLSS = X_a = 4000 mg/ℓ

(7) MLVSS = X_V = 2800 mg/ℓ

(8) $\Theta = 1.02$

(9) $f' = 0.53$

(10) F/M = 0.10

(11) S_e = 10 mg/ℓ

b. Adjust the BOD removal rate constant for temperature.

$$K_T = K_{20}\Theta^{T-20}$$

where

K_T = removal rate constant at desired temperature, °C

K_{20} = removal rate constant at 20°C, 0.0010

$\theta = 1.02$

$T = 15°C$

$$K_T = 0.001(1.02)^{15-20}$$

$$\underline{K_T = 0.0009}$$

c. Determine the size of the aeration tank.

$$V = \frac{a_o(S_o - S_e)Q_{avg}}{X_V(f')b}$$

where

V = volume of aeration tank, million gal

$a_o = 0.56$

S_o = influent BOD_5, 200 mg/ℓ

S_e = effluent soluble BOD_5, 10 mg/ℓ

Q_{avg} = average flow, 1.0 mg/ℓ

X_V = MLVSS, 2800 mg/ℓ

$f' = 0.53$

$b = 0.075$/day

$$V = \frac{0.56(200 - 10)1.0}{2800(0.53)0.075}$$

$$\underline{V = 0.96 \text{ million gallons}}$$

d. Calculate detention time

$$t = \frac{V}{Q} 24$$

where

t = detention time, hr

V = volume, 0.96 million gal

Q = average flow, 1.0 mgd

$$t = \frac{0.96}{1.0}(24)$$

$$\underline{t = 23 \text{ hr}}$$

e. Assume organic loading and calculate detention time.

$$t = \frac{24(S_o)}{X_V(F/M)}$$

where

t = detention time, hr

S_o = influent BOD_5, 200 mg/ℓ

X_V = MLVSS, 2800 mg/ℓ

F/M = 0.10

$$t = \frac{24(200)}{2800(0.10)}$$

$$\underline{t = 17 \text{ hr}}$$

Select longer detention time. $\underline{t = 23 \text{ hr}}$

f. Determine oxygen requirements allowing 60 percent for nitrification during summer.

$$O_2 = [a'S_rQ_{avg} + b'X_VV + 0.6(4.57)TKN(Q)]8.34$$

where

O_2 = oxygen required, lb/day

a' = 0.56

$S_r = S_c - S_e$ = 190 mg/ℓ

Q_{avg} = average flow, 1.0 mgd

b' = 0.15/day

X_V = MLVSS, 2800 mg/ℓ

V = volume of aeration tank, 0.96 million gal

4.57 = parts oxygen required per part TKN

TKN = total Kjeldahl nitrogen, 30 mg/ℓ

$$O_2 = [0.56(190)1.0 + 0.15(2800)0.96 + 0.6(4.57)30(1.0)]8.34$$

$$\underline{O_2 = 4936 \text{ lb/day}}$$

8. Calculate oxygen required per pound of BOD removed.

$$\frac{\text{lb } O_2}{\text{lb BOD}_r} = \frac{O_2}{Q_{avg}(S_r)8.34}$$

where

O_2 = oxygen required, 4936 lb/day

Q_{avg} = average flow, 1.0 mgd

S_r = BOD removed, 190 mg/ℓ

$$\frac{\text{lb } O_2}{\text{lb BOD}_r} = \frac{4936}{190(1.0)8.34}$$

$$\frac{\text{lb } O_2}{\text{lb BOD}_r} = 3.0 \geq 1.5 \text{ (OK)}$$

h. Design aeration system (diffused).

(1) Assume the following design parameters.

(a) STE = 5.0%

(b) $\alpha = 0.9$

(c) $\beta = 0.9$

(d) $p = 1.0$

(2) Select summer operating temperature and determine oxygen saturation (C_s), $T = 25°C$, and $(C_s)_T = 8.2$ mg/ℓ .

(3) Determine operating transfer efficiency.

$$\text{OTE} = \text{STE} \frac{\left[(C_s)_T (\beta)(p) - C_L\right]}{9.17} \alpha(1.02)^{T-20}$$

where

OTE = operating transfer efficiency, percent

STE = standard operating efficiency, 5.0 percent

$(C_s)_T = 8.2$ mg/ℓ

$\beta = 0.9$

$p = 1.0$

9.17 = O_2 saturation at 20°V

C_L = minimum dissolved oxygen concentration, 2.0 mg/ℓ

$\alpha = 0.9$

$T = 25°C$

$$OTE = 5.0 \frac{[8.2(0.9)1.0 - 2.0]}{9.17} 0.9(1.02)^{25-20}$$

$$\underline{OTE = 2.9\%}$$

(4) Calculate the required air flow.

$$R_a = \frac{O_2(10)^5 7.48}{OTE(0.0176)1440(V)10^6}$$

where

R_a = required air flow, cfm/1000 ft^3

O_2 = oxygen required, 4936 lb/day

OTE = operating transfer efficiency, 2.9%

0.0176 = lb O_2/ft^3 air

V = volume of aeration tank, 0.96 million gal

$$R_a = \frac{4936(10^5)7.48}{2.9(0.0176)1440(0.96)10^6}$$

$$\underline{R_a = 52.3 \text{ cfm/1000 ft}^3}$$

(5) Calculate horsepower required.

$$hp = \frac{O_2(1000)}{OTE(24)V(10^6)}$$

where

O_2 = oxygen required, 4936 lb/day

OTE = operating transfer efficiency, 2.9%

V = volume of aeration tank, 0.96 million gal

$$hp = \frac{4936(1000)}{2.9(24)0.96(10^6)}$$

$$hp = 0.074 \text{ hp/1000 gal} < 0.1 \text{ hp/1000 gal}$$

<u>Use 0.1 hp/1000 gal</u>

$$\text{Total hp} = 0.1(V)1000$$

$$hp = 0.1(0.96)1000$$

<u>hp = 96 hp; use 100 hp</u>

i. Calculate sludge production.

$$\Delta X_V = [a(S_r)(Q) - (b)(X_V)(V) - Q(SS_{eff}) + Q(VSS)f' + Q(SS - VSS)]8.34$$

where

ΔX_V = sludge produced, lb/day

a = 0.73

S_r = BOD removed, $S_o - S_e$ = 190 mg/ℓ

Q = average flow, 1.0 mgd

b = 0.075/day

X_V = MLVSS, 2800 mg/ℓ

V = volume of aeration tank, 0.96 million gal

SS_{eff} = solids in effluent, 20 mg/ℓ

VSS = volatile solids in influent, 150 mg/ℓ

f' = 0.53

SS = solids in influent, 200 mg/ℓ

$$\Delta X_V = [0.73(190)1.0 - 0.075(2800)0.96 - 1.0(20) + 1.0(150)0.53 + 1.0(200 - 150)]8.34$$

$$\underline{\Delta X_V = 389 \text{ lb/day}}$$

j. Calculate solids produced per pound of BOD removed.

$$\frac{\text{lb solids}}{\text{lb BOD}_r} = \frac{\Delta X_V}{Q(S_o - S_e)8.34}$$

where

ΔX_V = sludge produced, 389 lb/day

Q = average flow, 1.0 mgd

S_o = influent BOD, 200 mg/ℓ

S_e = effluent BOD, 10 mg/ℓ

$$\frac{\text{lb solids}}{\text{lb BOD}_r} = \frac{389}{1.0(200 - 10)8.34}$$

$$\underline{\frac{\text{lb solids}}{\text{lb BOD}_r} = 0.25 \simeq 0.2 \text{ (OK)}}$$

k. Calculate solids retention time.

$$t_s = \frac{X_a V 8.34}{\Delta X_V}$$

where

t_s = solids retention time, days

X_a = MLSS, 4000 mg/ℓ

V = volume of aeration tank, 0.96 million gal

ΔX_V = solids produced, 389 lb/day

$$t_s = \frac{4000(0.96)8.34}{389}$$

$$\underline{t_s = 82 \text{ days}}$$

l. Determine effluent soluble BOD_5.

$$\frac{S_e}{S_o} = \frac{1}{1 + kX_V t}$$

where

S_e = soluble effluent BOD, mg/ℓ

S_o = influent BOD, 200 mg/ℓ

k = reaction rate constant, 0.0009

X_V = MLVSS, 2800 mg/ℓ

t = detention time, 23 hr

$$\frac{S_e}{200} = \frac{1}{1 + (0.0009)2800(23)}$$

$$\underline{S_e = 3.4 \text{ mg/ℓ}}$$

m. Calculate sludge recycle ratio.

$$\frac{Q_r}{Q_{avg}} = \frac{X_a}{X_u - X_a}$$

where

Q_r = recycle flow, mgd

Q_{avg} = average flow, 1.0 mgd

X_a = MLSS, 4000 mg/ℓ

X_u = underflow concentration, 10,000 mg/ℓ

$$\frac{Q_r}{1.0} = \frac{4,000}{10,000 - 4,000}$$

$$\underline{Q_r = 0.67 \text{ mgd}}$$

n. Calculate nutrient requirements for nitrogen.

$$N = 0.123\Delta X_V$$

$$N = 0.123(389)$$

$$N = 48 \text{ lb/day}$$

for phosphorus

$$P = 0.026\Delta X_V$$

$$P = 0.026(389)$$

$$P = 10 \text{ lb/day}$$

$$\text{N in influent} = 30 \text{ mg/}\ell(Q)8.34$$

$$= 30(1.0)8.34$$

$$= 250 \text{ lb/day} > 48 \text{ lb/day}$$

<u>N to be added = none</u>

$$\text{P in influent} = 15 \text{ mg/}\ell(Q)8.34$$

$$= 15(1.0)8.34$$

$$= 125 \text{ lb/day} > 10 \text{ lb/day}$$

<u>P to be added = none</u>

7-41. <u>Cost Data</u>. Appropriate cost data and economic evaluation may be found in Chapter 8.

7-42. Bibliography.

a. American Public Health Association, American Society of Civil Engineers, American Water Works Association, and Water Pollution Control Federation, "Glossary, Water and Wastewater Control Engineering," 1969.

b. American Public Works Association, "Feasibility of Computer Control of Wastewater Treatment," Report No. 17090DOY, Dec 1970, U. S. Environmental Protection Agency, Washington, D. C.

c. American Society of Civil Engineers and the Water Pollution Control Federation, "Sewage Treatment Plant Design," Manual of Practice No. 8, 1959, 1961, 1967, and 1968, Water Pollution Control Federation, Washington, D. C.

d. Bargman, R. D. and Borgerding, J., "Characterization of the Activated Sludge Process," Report No. R2-73-224, Apr 1973, U. S. Environmental Protection Agency, Washington, D. C.

e. Busch, A. W., Aerobic Biological Treatment of Wastewaters, Oligodynamics Press, 1971.

f. Center for Research, Inc., University of Kansas, "Oxygen Consumption in Continuous Biological Culture," Report No. 17050DJS, May 1971, U. S. Environmental Protection Agency, Washington, D. C.

g. City of Austin, Texas, "Design Guides for Biological Wastewater Treatment Processes," Report No. 11010ESQ, Aug 1971, U. S. Environmental Protection Agency, Washington, D. C.

h. Eckenfelder, W. W., Jr., Industrial Water Pollution Control, McGraw-Hill, New York, 1966.

i. Eckenfelder, W. W., Jr., "General Concepts of Biological Treatment," Manual of Treatment Processes, Vol 1, 1969, Environmental Science Services, Inc., Briarcliff Manor, New York.

j. Eckenfelder, W. W., Jr., Water Quality Engineering for Practicing Engineers, Barnes and Nobel, New York, 1970.

k. Eckenfelder, W. W., Jr., "Activated Sludge and Extended Aeration," Process Design in Water Quality Engineering - New Concepts and Developments, 1971, Vanderbilt University, Nashville, Tenn.

l. Eckenfelder, W. W., Jr., and Ford, D. L., Water Pollution Control, Pemberton Press, New York, 1970.

m. Eckenfelder, W. W., Jr., and O'Connor, O. J., Biological Waste Treatment, Pergamon Press, New York, 1961.

n. Gaudy, A. G., Jr., and Gaudy, E. T., "Biological Concepts for Design and Operation of the Activated Sludge Process," Report No. 17090-FQJ, Sep 1971, U. S. Environmental Protection Agency, Washington, D. C.

o. Goodman, B. L., Design Handbook of Wastewater Systems: Domestic, Industrial, Commercial, Technomic, Westport, Conn., 1971.

p. Goodman, B. L. and Englande, A. J., Jr., "A Consolidated Approach to Activated Sludge Process Design," Conference on Toward a Unified Concept of Biological Waste Treatment Design, 5-6 Oct 1972, Atlanta, Ga.

q. Lawrence, A. W. and McCarty, P. L., "Unified Basis for Biological Treatment Design and Operation," Journal, Sanitary Engineering Division, American Society of Civil Engineers, Vol 96, SA3, 1970.

r. Maier, W. J., "Biological Removal of Colloidal Matter from Wastewater," Report No. R2-73-147, Jun 1973, U. S. Environmental Protection Agency, Washington, D. C.

s. McCarty, P. L., and Brodersen, C. F., "Theory of Extended Aeration Activated Sludge," Journal, Water Pollution Control Federation, Vol 34, 1962, pp 1095-1103.

t. McKinney, R. E., Microbiology for Sanitary Engineers, McGraw-Hill, New York, 1962.

u. Metcalf and Eddy, Inc., Wastewater Engineering; Collection, Treatment, and Disposal, McGraw-Hill, New York, 1972.

v. Okun, D. A., "System of Bio-Precipitation of Organic Matter from Sewage," Sewage Works Journal, Vol 21, No. 5, 1949, pp 763-794.

w. Smith, H. S., "Homogeneous Activated Sludge Principles and Features of the Activated Sludge Process," Water and Wastes Engineering, Vol 4, Jul 1967, pp 46-50.

x. Smith, R., and Eilers, R. G., "A Generalized Computer Model for Steady-State Performance of the Activated Sludge Process," FWQA Report No. TWRC-15, Oct 1969, Robert A. Taft Water Research Center, Cincinnati, Ohio.

y. Stensel, H. D. and Shell, G. L., "Two Methods of Biological Treatment Design," Journal, Water Pollution Control Federation, Vol 46, Feb 1974, pp 271-283.

z. Stewart, M. J., "Activated Sludge System Variations - Specific Applications," The 15th Ontario Industrial Waste Conference, 9-12 Jun 1968, Niagara Falls, Ontario.

aa. Toerber, E. D., "Full Scale Parallel Activated Sludge Process Evaluation," Report No. R2-72-065, Nov 1972, U. S. Environmental Protection Agency, Washington, D. C.

bb. Weston, R. F., "Design of Sludge Reaeration Activated Sludge Systems," Journal, Water Pollution Control Federation, Vol 33, No. 7, 1961, pp 748-757.

 (next page is 7-129)

Section VII. MODIFIED OR HIGH-RATE AERATION ACTIVATED SLUDGE

7-43. Background.

a. Modified or high-rate aeration activated sludge is defined as "a modification of the activated sludge process in which a shortened period of aeration is used with a reduced quantity of suspended solids in the mixed liquor," (para 7-50a). The flow diagram is the same as that for the plug-flow process (fig. 7-6); the difference in the process

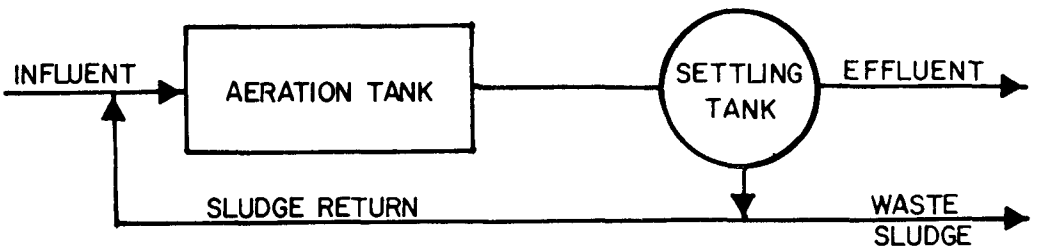

Figure 7-6. Plug flow activated sludge.

design parameters (shorter detention time and lower mixed liquid suspended solids) results in less air requirements and, hence, less power consumption. Modified aeration is also characterized by a poor settling sludge and low BOD removal efficiencies.

b. Process design parameters and discussion of applications are given in References c, t, and y in paragraph 7-50 below.

7-44. Input Data.

a. Wastewater Flow (Average and Peak). In case of high variability, a statistical distribution should be provided.

b. Wastewater Strength.

(1) BOD_5 (soluble and total), mg/ℓ.

(2) COD and/or TOC (maximum and minimum), mg/ℓ.

(3) Suspended solids, mg/ℓ.

(4) Volatile suspended solids (VSS), mg/ℓ.

(5) Nonbiodegradable fraction of VSS, mg/ℓ.

c. Other Characterization.

(1) pH.

(2) Acidity and/or alkalinity, mg/ℓ.

(3) Nitrogen,[1] mg/ℓ.

(4) Phosphorus (total and soluble), mg/ℓ.

(5) Oils and greases, mg/ℓ.

(6) Heavy metals, mg/ℓ.

(7) Toxic or special characteristics (e.g., phenols), mg/ℓ.

(8) Temperature, °F or °C.

d. Effluent Quality Requirements.

(1) BOD_5, mg/ℓ.

(2) SS, mg/ℓ.

(3) TKN, mg/ℓ.

(4) P, mg/ℓ.

(5) Total nitrogen (TKN + NO_3-N), mg/ℓ.

(6) Settleable solids, mg/ℓ.

7-45. Design Parameters.

a. Reaction rate constants and coefficients.

---

[1] The form of nitrogen should be specified as to its biological availability (e.g., NH_3 or Kjeldahl).

Eckenfelder

k	0.0007-0.002 ℓ/mg/hr
a	0.73
a'	0.52
b	0.075/day
b'	0.15/day
f	0.40
f'	0.53

b. F/M = (1.5-5.0).

c. Volumetric loading = 100-250.

d. t = (1.5-3.0) hr.

e. t_s = (0.2-0.5) days.

f. MLSS = (200-1000) mg/ℓ.

g. MLVSS = (140-700) mg/ℓ.

h. Q_r/Q = (0.05-0.15).

i. lb O_2/lb BOD_r = (0.5-0.75).

j. lb solids/lb BOD_r = (0.65-0.85).

k. Efficiency = (50-60 percent).

7-46. Design Procedure (Eckenfelder's Approach).

a. Assume the following design parameters when unknown.

(1) Fraction of BOD synthesized (a).

(2) Fraction of BOD oxidized for energy (a').

(3) Endogenous respiration rate (b and b')

(4) Mixed liquor suspended solids (MLSS).

(5) Mixed liquor volatile suspended solids (MLVSS).

(6) Food-to-microorganism ratio (F/M).

(7) Temperature correction coefficient (θ).

(8) Nonbiodegradable fraction of VSS in influent (f).

(9) Degradable fraction of the MLVSS (f').

b. Determine the size of the aeration tank by first determining the detention time.

$$t = \frac{24S_o}{(X_V)(F/M)}$$

where

t = detention time, hr

S_o = influent BOD, mg/ℓ

X_V = MLVSS, mg/ℓ

F/M = food-to-microorganism ratio

c. Calculate the volume of aeration tank.

$$V = Q_{avg}\left(\frac{t}{24}\right)$$

where

V = volume of aeration tank, million gal

Q_{avg} = average daily flow, mgd

t = detention time, hr

d. Calculate oxygen requirements.

$$\frac{dO}{dt} = \frac{a'(S_r)}{t}$$

or

$$O_2 = a'(S_r)(Q_{avg})(8.34)$$

where

dO/dt = oxygen uptake rate, mg/ℓ/hr

a' = fraction of BOD oxidized for energy

S_r = BOD removed ($S_o - S_e$), mg/ℓ

t = detention time, hr

O_2 = oxygen uptake rate, lb/day

Q_{avg} = average flow rate, mgd

e. Check the oxygen supplied against pounds of BOD removed (0.5-0.7).

$$\text{lb } O_2/\text{lb BOD}_r = \frac{O_2}{Q(S_r)(8.34)}$$

where

O_2 = oxygen required, lb/day

Q = flow, mgd

S_r = BOD removed, mg/ℓ

f. Design Aeration System.

(1) Diffused aeration system.

(a) Assume the following design parameters.

1 Standard transfer efficiency, percent, from manufacturer (5-8 percent).

2 O_2 transfer in waste/O_2 transfer in water ≈ 0.9.

3 O_2 saturation in waste/O_2 saturation in water ≈ 0.9.

4 Correction factor for pressure ≈ 1.0.

(b) Select summer operating temperature (25-30°C) and determine (from standard tables) O_2 saturation.

(c) Adjust standard transfer efficiency to operating conditions.

$$OTE = STE \frac{\left[\left(C_s\right)_T (\beta)(p) - C_L\right]}{9.17} \alpha(1.02)^{T-20}$$

where

OTE = operating transfer efficiency, percent

STE = standard transfer efficiency, percent

$\left(C_s\right)_T$ = O_2 saturation at selected summer temperature T, °C, mg/ℓ

β = O_2 saturation in waste/O_2 saturation in water ≈ 0.9

p = correction factor for pressure ≈ 1.0

C_L = minimum dissolved oxygen to be maintained in the basin $\geqslant 2.0$ mg/ℓ

α = O_2 transfer in waste/O_2 transfer in water ≈ 0.9

T = temperature, °C

(d) Calculate required air flow.

$$R_a = \frac{O_2(10^5)(7.48)}{(OTE)\left(0.0176 \frac{\text{lb } O_2}{\text{ft}^3 \text{ air}}\right)\left(1440 \frac{\text{min}}{\text{day}}\right) V}$$

where

R_a = required air flow, cfm/1000 ft^3

O_2 = oxygen required, lb/day

OTE = operating transfer efficiency, percent

V = volume of basin, gal

(2) Mechanical aeration system.

(a) Assume the following design parameters.

1 Standard transfer efficiency, lb/hp-hr (0 dissolved oxygen, 20°C, and tap water).

2 O_2 transfer in waste/O_2 transfer in water ≈ 0.9.

3 O_2 saturation in waste/O_2 saturation in water ≈ 0.9.

4 Correction factor for pressure ≈ 1.0.

(b) Select summer operating temperature (25-30°C) and determine (from standard tables) O_2 saturation.

(c) Adjust standard transfer efficiency to operating conditions.

$$OTE = STE \frac{\left[(C_s)_T (\beta)(p) - C_L\right]}{9.17} \alpha (1.02)^{T-20}$$

where

OTE = operating transfer efficiency, lb O_2/hp-hr

STE = standard transfer efficiency, lb O_2/hp-hr

$(C_s)_T$ = O_2 saturation at selected summer temperature T, °C, mg/ℓ

β = O_2 saturation in waste/O_2 saturation in water ≈ 0.9

p = correction factor for pressure ≈ 1.0

C_L = minimum dissolved oxygen to be maintained in the basin $\geqslant 2.0$ mg/ℓ

α = O_2 transfer in waste/O_2 transfer in water ≈ 0.9

T = temperature, °C

(d) Calculate horsepower requirement.

$$hp = \frac{O_2}{\left(OTE \frac{lb\ O_2}{hp\text{-}hr}\right)(24)(V)} \times 1000$$

where

hp = horsepower required/1000 gal

O_2 = oxygen required, lb/day

OTE = operating transfer efficiency

V = volume of basin, gal

(e) Calculate sludge production.

$$\Delta X_V = \left[aS_rQ_{avg} + fQ(VSS) + Q(SS - VSS)\right] 8.34$$

where

ΔX_V = sludge produced, lb/day

a = fraction of BOD removed synthesized to cell material

S_r = BOD removed, mg/ℓ

Q_{avg} = average flow, mgd

f = nonbiodegradable fraction of VSS in influent

Q = flow, mgd

VSS = volatile suspended solids, mg/ℓ

SS = suspended solids in influent, mg/ℓ

(f) Check ΔX_V against 0.65-0.85 lb solids/lb BOD_r.

$$\frac{\text{lb solids}}{(\text{lb } BOD_r)} = \frac{\Delta X_V}{S_r(Q)(8.34)}$$

where

ΔX_V = sludge produced, lb/day

S_r = BOD removed, mg/ℓ

Q = flow, mgd

(g) Calculate sludge recycle ratio.

$$\frac{Q_r}{Q} = \frac{X_a}{X_u - X_a}$$

where

Q_r = volume of recycled sludge, mgd

Q = flow, mgd

X_a = MLSS

X_u = suspended solids concentration in returned sludge, mg/ℓ

(h) Calculate solids retention time.

$$SRT = \frac{V(X_a)8.34}{\Delta X_a} \text{ (\% volatile)}$$

where

SRT = solids retention time, days

V = volume of basin, million gal

X_a = MLSS

ΔX_a = sludge produced, lb/day

(i) Estimate effluent BOD_5.

$$\left(BOD_5\right)_{eff} = S_o\left(1 - \frac{BOD_r}{100}\right)$$

where

S_o = influent BOD_5, mg/ℓ

BOD_r = BOD removed, percent

(j) Determine nutrient requirements for nitrogen

$$N = 0.123\Delta X_V$$

and phosphorus

$$P = 0.026\Delta X_V$$

where

ΔX_V = sludge produced, lb/day

and check against BOD:N:P = 100:5:1.

7-47. Output Data.

a. Aeration Tank.

(1) Reaction rate constant, 1/mg/hr.

(2) Sludge produced per BOD removed.

(3) Endogenous respiration rate (b, b').

(4) O_2 utilized per BOD removed.

(5) Influent nonbiodegradable VSS, mg/ℓ.

(6) Effluent degradable VSS, mg/ℓ.

(7) lb BOD/lb MLSS-day (F/M ratio).

(8) Mixed liquor SS, mg/ℓ (MLSS).

(9) Mixed liquor VSS, mg/ℓ (MLVSS).

(10) Aeration time, hr.

(11) Volume of aeration tank, million gal.

(12) Oxygen required, lb/day.

(13) Sludge produced, lb/day.

(14) Nitrogen requirement, lb/day.

(15) Phosphorus requirement, lb/day.

(16) Sludge recycle ratio, percent.

(17) Solids retention time, days.

(18) Volumetric loading, lb BOD/1000 ft^3.

b. Diffused Aeration System.

(1) Standard transfer efficiency, percent.

(2) Operating transfer efficiency, percent.

(3) Required air flow, cfm/1000 ft^3.

c. Mechanical Aeration System.

(1) Standard transfer efficiency, lb O_2/hp-hr.

(2) Operating transfer efficiency, lb O_2/hp-hr.

(3) Horsepower required, hp.

7-48. Example Calculations.

a. Assume the following design parameters.

(1) $a = 0.73$

(2) $a' = 0.52$

(3) $b = 0.075/\text{day}$, $b' = 0.15/\text{day}$

(4) MLSS = X_a = 600 mg/ℓ

(5) MLVSS = X_V = 420 mg/ℓ

(6) F/M = 3.0

(7) $\theta = 1.02$

(8) $f = 0.40$

(9) $f' = 0.53$

b. Calculate the detention time.

$$t = \frac{24S_o}{X_V(F/M)}$$

where

t = detention time, hr

S_o = influent BOD, 200 mg/ℓ

X_V = MLVSS, 420 mg/ℓ

F/M = food to microorganism, 3.0

$$t = \frac{24(200)}{420(3.0)}$$

$$\underline{t = 3.8 \text{ hr}}$$

c. Calculate the volume of the aeration tank.

$$V = Q_{avg} \frac{t}{24}$$

where

V = volume of aeration tank, million gal

Q_{avg} = average flow, 1.0 mgd

t = detention time, 3.8 hr

$$V = 1.0\left(\frac{3.8}{24}\right)$$

$$\underline{V = 0.158 \text{ million gal}}$$

d. Calculate the oxygen requirements.

$$O_2 = a'(S_r)Q_{avg}8.34$$

where

O_2 = oxygen requirements, lb/day

a' = 0.52

S_r = BOD removed $(S_o - S_e)$ = 200 - 100 = 100 mg/ℓ

Q_{avg} = average flow, 1.0 mgd

$$O_2 = 0.52(100)1.0(8.34)$$

$$\underline{O_2 = 434 \text{ lb/day}}$$

e. Check oxygen supplied against pounds of BOD removed (0.5-0.7).

$$\text{lb } O_2/\text{lb BOD}_r = \frac{O_2}{Q(S_r)8.34}$$

where

O_2 = oxygen required, 434 lb/day

Q = average flow, 1.0 mgd

S_r = BOD removed, 100 mg/ℓ

$$\text{lb } O_2/\text{lb BOD}_r = \frac{434}{1.0(100)8.34}$$

$$\underline{\text{lb } O_2/\text{lb BOD}_r = 0.52 \text{ (OK)}}$$

f. Design aeration system.

(1) Assume the following parameters.

(a) STE = 5.0%

(b) $\alpha = 0.9$

(c) $\beta = 0.9$

(d) $p = 1.0$

(2) Select summer operating temperature and determine O_2 saturation. $T = 25°C$, $O_2 = 8.2$ mg/ℓ.

(3) Adjust standard transfer efficiency to operating conditions.

$$\text{OTE} = \text{STE} \frac{\left[\left(C_s\right)_T \beta p - C_L\right]}{9.17} \alpha(1.02)^{T-20}$$

where

OTE = operating transfer efficiency, percent

STE = standard transfer efficiency, 5.0 percent

$\left(C_s\right)_T$ = O_2 saturation at summer temperature, 8.2 mg/ℓ

$\beta = 0.9$

$p = 1.0$

C_L = minimum dissolved oxygen, 2.0 mg/ℓ

$\alpha = 0.9$

T = summer temperature, 25°C

$$OTE = 5.0 \frac{[8.2(0.9)1.0 - 2.0]}{9.17} (0.9)1.02^{25-20}$$

$$\underline{OTE = 2.9\%}$$

(4) Calculate horsepower requirement.

$$hp = \frac{O_2\ 1000}{OTE(24)V(10^6)}$$

where

hp = horsepower required/1000 gal

O_2 = oxygen required, 434 lb/day

OTE = operating transfer efficiency, 2.9%

V = volume of aeration tank, 0.158 million gal

$$hp = \frac{434(1000)}{2.9(24)0.158(10^6)}$$

hp = 0.04 hp/1000 gal < 0.1 hp/1000 gal required for mixing.

Therefore

$$\underline{hp = 0.1\ hp/1000\ gal}$$

$$hp = 0.1(V)1000$$

$$hp = 0.1(0.158)1000$$

$$\underline{hp = 15.8\ hp,\ use\ 20\ hp}$$

g. Calculate sludge production.

$$\Delta X_V = [\alpha S_r Q_{avg} + f(Q)VSS + Q(SS - VSS)]8.34$$

where

ΔX_V = sludge production, lb/day

α = 0.73

S_r = BOD_5 removed, 100 mg/ℓ

Q_{avg} = average flow, 1.0 mgd

f = 0.40

VSS = volatile suspended solids in effluent, 150 mg/ℓ

SS = suspended solids influent, 200 mg/ℓ

$$\Delta X_V = [0.73(100)1.0 + 0.40(1.0)150 + 1.0(200 - 150)]8.34$$

$$\underline{\Delta X_V = 1526 \text{ lb/day}}$$

h. Check ΔX_V against 0.65-0.55 lb solids/lb BOD_r.

$$\frac{\text{lb solids}}{\text{lb } BOD_r} = \frac{\Delta X_V}{S_r(Q)8.34}$$

where

ΔX_V = sludge produced, 1526 lb/day

S_r = BOD_5 removed, 100 mg/ℓ

Q = average flow, 1.0 mgd

$$\frac{\text{lb solids}}{\text{lb } BOD_r} = \frac{1526}{100(1.0)8.34}$$

$$\frac{\text{lb solids}}{\text{lb } BOD_r} = 1.8 > 0.85$$

i. Calculate sludge recycle ratio.

$$\frac{Q_r}{Q} = \frac{X_a}{X_V - X_a}$$

where

Q_r = volume of recycled sludge, mgd

Q = average flow, mgd

X_a = MLSS, 600 mg/ℓ

X_V = suspended solids in returned sludge, 10,000 mg/ℓ

$$\frac{Q_r}{1.0} = \frac{600}{10{,}000 - 600}$$

$$\underline{Q_r = 0.06 \text{ mgd}}$$

j. Calculate solids retention time.

$$SRT = \frac{V(X_a)8.34(\%\text{ volatile})}{\Delta X_a}$$

where

SRT = solids retention time, days

V = volume of aeration tank, 0.158 million gal

X_a = MLSS, 600 mg/ℓ

ΔX_a = sludge produced, 1526 lb/day

% volatile = 70%

$$SRT = \frac{0.158(600)8.34(0.7)}{1526}$$

$$\underline{SRT = 0.36 \text{ days}}$$

k. Estimate effluent BOD_5.

$$BOD_5 = S_o \left(1 - \frac{BOD_r}{100}\right)$$

where

S_o = influent BOD, 200 mg/ℓ

BOD_r = BOD removed, 50%

$$BOD_5 = 200 \left(1 - \frac{50}{100}\right)$$

$$\underline{BOD_5 = 100 \text{ mg/}\ell}$$

1. Determine nutrient requirements for nitrogen

$$N = 0.123\ \Delta X_V$$

$$N = 0.123(2180)$$

$$\underline{N = 268 \text{ lb/day}}$$

for phosphorus

$$P = 0.026\ \Delta X_V$$

$$P = 0.026(2180)$$

$$\underline{P = 57 \text{ lb/day}}$$

N in influent = 30 mg/ℓ Q_{avg} 8.34

= 30(1.0)8.34

= 250 lb/day < 268 lb/day

<u>N to be added = 18 lb/day</u>

P in influent = 15 mg/ℓ Q_{avg} 8.34

= 15(1.0)8.34

= 125 lb/day > 57 lb/day

<u>P to be added = none</u>

7-49. Cost Data. Appropriate cost data and economic evaluation may be found in Chapter 8.

7-50. Bibliography.

a. American Public Health Association, American Society of Civil Engineers, American Water Works Association, and Water Pollution Control Federation, "Glossary, Water and Wastewater Control Engineering," 1969.

b. American Public Works Association, "Feasibility of Computer Control of Wastewater Treatment," Report No. 17090DOY, Dec 1970, U. S. Environmental Protection Agency, Washington, D. C.

c. American Society of Civil Engineers and the Water Pollution Control Federation, "Sewage Treatment Plant Design," Manual of Practice No. 8, 1959, 1961, 1967, and 1968, Water Pollution Control Federation, Washington, D. C.

d. Bargman, R. D. and Borgerding, J., "Characterization of the Activated Sludge Process," Report No. R2-73-224, Apr 1973, U. S. Environmental Protection Agency, Washington, D. C.

e. Busch, A. W., Aerobic Biological Treatment of Wastewaters, Oligodynamics Press, 1971.

f. Center for Research, Inc., University of Kansas, "Oxygen Consumption in Continuous Biological Culture," Report No. 17050DJS, May 1971, U. S. Environmental Protection Agency, Washington, D. C.

g. City of Austin, Texas, "Design Guides for Biological Wastewater Treatment Processes," Report No. 11010ESQ, Aug 1971, U. S. Environmental Protection Agency, Washington, D. C.

h. Eckenfelder, W. W., Jr., Industrial Water Pollution Control, McGraw-Hill, New York, 1966.

i. Eckenfelder, W. W., Jr., "General Concepts of Biological Treatment," Manual of Treatment Processes, Vol 1, 1969, Environmental Science Services, Inc., Briarcliff Manor, New York.

j. Eckenfelder, W. W., Jr., Water Quality Engineering for Practicing Engineers, Barnes and Nobel, New York, 1970.

k. Eckenfelder, W. W., Jr., "Activated Sludge and Extended Aeration," Process Design in Water Quality Engineering - New Concepts and Developments, 1971, Vanderbilt University, Nashville, Tenn.

l. Eckenfelder, W. W., Jr., and Ford, D. L., Water Pollution Control, Pemberton Press, New York, 1970.

m. Eckenfelder, W. W., Jr., and O'Connor, O. J., Biological Waste Treatment, Pergamon Press, New York, 1961.

n. Gaudy, A. G., Jr., and Gaudy, E. T., "Biological Concepts for Design and Operation of the Activated Sludge Process," Report No. 17090-FQJ, Sep 1971, U. S. Environmental Protection Agency, Washington, D. C.

o. Goodman, B. L., Design Handbook of Wastewater Systems: Domestic, Industrial, Commercial, Technomic, Westport, Conn., 1971.

p. Goodman, B. L. and Englande, A. J., Jr., "A Consolidated Approach to Activated Sludge Process Design," Conference on Toward a Unified Concept of Biological Waste Treatment Design, 5-6 Oct 1972, Atlanta, Ga.

q. Lawrence, A. W. and McCarty, P. L., "Unified Basis for Biological Treatment Design and Operation," Journal, Sanitary Engineering Division, American Society of Civil Engineers, Vol 96, SA3, 1970.

r. Maier, W. J., "Biological Removal of Colloidal Matter from Wastewater," Report No. R2-73-147, Jun 1973, U. S. Environmental Protection Agency, Washington, D. C.

s. McKinney, R. E., Microbiology for Sanitary Engineers, McGraw-Hill, New York, 1962.

t. Metcalf and Eddy, Inc., Wastewater Engineering; Collection, Treatment, and Disposal, McGraw-Hill, New York, 1972.

u. Okun, D. A., "System of Bio-Precipitation of Organic Matter from Sewage," Sewage Works Journal, Vol 21, No. 5, 1949, pp 763-794.

v. Smith, H. S., "Homogeneous Activated Sludge Principles and Features of the Activated Sludge Process," Water and Wastes Engineering, Vol 4, Jul 1967, pp 46-50.

w. Smith, R. and Eilers, R. G., "A Generalized Computer Model for Steady-State Performance of the Activated Sludge Process," FWQA Report No. TWRC-15, Oct 1969, Robert A. Taft Water Research Center, Cincinnati, Ohio.

x. Stansel, H. D. and Shell, G. L., "Two Methods of Biological Treatment Design," Journal, Water Pollution Control Federation, Vol 46, Feb 1974, pp 271-283.

y. Stewart, M. J., "Activated Sludge System Variations - Specific Applications," The 15th Ontario Industrial Waste Conference, 9-12 Jun 1968, Niagara Falls, Ontario.

z. Toerber, E. D., "Full Scale Parallel Activated Sludge Process Evaluation," Report No. R2-72-065, Nov 1972, U. S. Environmental Protection Agency, Washington, D. C.

aa. Weston, R. F., "Design of Sludge Reaeration Activated Sludge Systems," Journal, Water Pollution Control Federation, Vol 33, No. 7, 1961, pp 748-757.

(next page is 7-151)

Section VIII. CONTACT STABILIZATION ACTIVATED SLUDGE

7-51. Background.

a. The contact stabilization process (fig. 7-7) is defined as "a modification of the activated sludge process in which raw wastewater is aerated with a high concentration of activated sludge for a short period, usually less than 60 min to obtain BOD removal by absorption. The solids are subsequently removed by sedimentation and transferred to a stabilization tank where aeration is continued further to oxidize and condition them before their reintroduction to the raw wastewater flow" (para 7-58a).

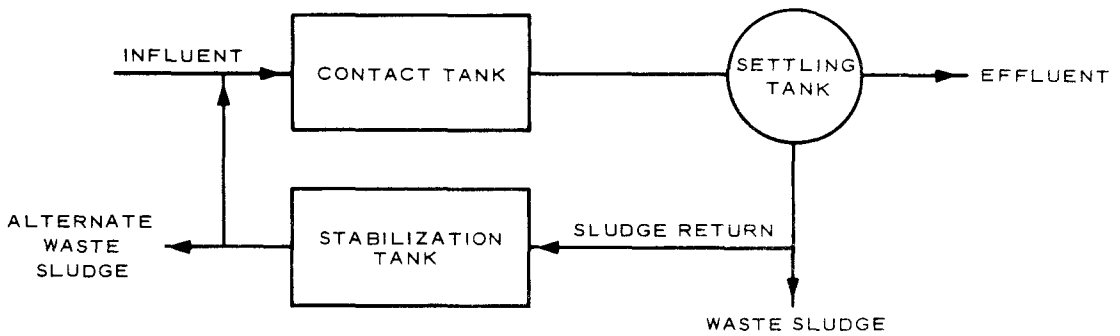

Figure 7-7. Contact stabilization activated sludge.

b. Contact stabilization was developed to take advantage of the absorptive properties of the sludge floc. Contact stabilization achieves absorption in the contact tank, and oxidation and synthesis of removed organics occur in a separate aeration tank.

c. The volume requirement for aeration is approximately one-half of that of a conventional plug-flow unit. Therefore, it is often possible to double the capacity of an existing plug-flow plant by simply repiping or making minor changes in aeration equipment.

d. References h, o, t, v, and y in paragraph 7-58, discuss the contact stabilization variation and suggest rules of thumb for the design parameters.

7-52. Input Data.

a. Wastewater Flow (Average and Peak). In case of high variability, a statistical distribution should be provided.

b. Wastewater Strength.

(1) BOD_5 (soluble and total), mg/ℓ.

(2) COD and/or TOC (maximum and minimum), mg/ℓ.

(3) Suspended solids, mg/ℓ.

(4) Volatile suspended solids (VSS), mg/ℓ.

(5) Nonbiodegradable fraction of VSS, mg/ℓ.

c. Other Characterization.

(1) pH.

(2) Acidity and/or alkalinity, mg/ℓ.

(3) Nitrogen,[1] mg/ℓ.

(4) Phosphorus (total and soluble), mg/ℓ.

(5) Oils and greases, mg/ℓ.

(6) Heavy metals, mg/ℓ.

(7) Toxic or special characteristics (e.g., phenols), mg/ℓ.

(8) Temperature, °F or °C.

d. Effluent Quality Requirements.

(1) BOD_5, mg/ℓ.

(2) SS, mg/ℓ.

(3) TKN, mg/ℓ.

(4) P, mg/ℓ.

(5) Total nitrogen (TKN + No_3 - N), mg/ℓ.

---

[1] The form of nitrogen should be specified as to its biological availability (e.g., NH_3 or Kjeldahl).

(6) Settleable solids, mg/ℓ.

7-53. Design Parameters.

a. Contact tank detention time, t_1.

t_1 = (0.5-1.0) hr

b. System organic loading (F/M).

F/M = (0.2-0.6).

c. Volumetric loading = 60-75.

d. Stabilization tank detention time, t_2.

t_2 = (2-4) hr

e. Contact tank MLSS, X_{ac}.

X_{ac} = (2500-3500) mg/ℓ

f. Contact tank MLVSS, X_{vc}.

$X_{vc} = 0.7X_{ac}$ = (1750-2450) mg/ℓ

g. Stabilization tank MLSS, X_{as}.

X_{as} = (4000-8000) mg/ℓ

h. Stabilization tank MLVSS, X_{vs}.

X_{vs} = (2800-5600) mg/ℓ

i. Air requirement (lb O_2/lb BOD_r).

lb O_2/lb BOD_r = 1.25-1.5

j. lb solids/lb BOD_r = (0.2-0.4).

k. Recycle ratio, Q_r/Q.

Q_r/Q = (0.25-1.0)

1. Efficiency = (>90 percent).

7-54. Design Procedure.

a. Assume the following design parameters.

(1) Aeration time in contact tank, hr.

(2) Aeration time in stabilization tank, hr.

(3) MLSS in contact tank, mg/ℓ.

(4) MLSS in stabilization tank, mg/ℓ.

(5) MLVSS in contact tank, mg/ℓ.

(6) MLVSS in stabilization tank, mg/ℓ.

(7) O_2 requirements, lb/day.

(8) Sludge produced, lb/day.

b. Determine contact tank volume.

$$V_c = Q_{avg}\left(\frac{t_1}{24}\right)$$

where

V_c = volume of contact tank, million gal

Q_{avg} = average flow, mgd

t_1 = detention time in contact tank, hr

c. Determine stabilization tank volume.

$$V_s = Q_{avg}\left(\frac{t_2}{24}\right)$$

where

V_s = volume of stabilization tank, million gal

Q_{avg} = average flow, mgd

t_2 = detention time in stabilization tank, hr

d. Calculate system organic loading and check against desired loading.

$$(F/M)_{system} = \frac{Q_{avg}(S_o)}{V_c(X_{vc}) + V_s(X_{vs})}$$

where

F/M = food-to-microorganism ratio

Q_{avg} = average flow, mgd

S_o = influent BOD_5, mg/ℓ

V_c = volume of contact tank, million gal

X_{vc} = MLVSS in contact tank, mg/ℓ

V_s = volume of stabilization tank, million gal

X_{vs} = MLVSS in stabilization tank, mg/ℓ

e. Calculate volumetric loading and check against desired loading.

$$\text{lb/1000 ft}^3 = \frac{Q_{avg}(S_o)(62.4)}{(V_c + V_s) \times 10^3}$$

where

Q_{avg} = average flow, mgd

S_o = influent BOD_5, mg/ℓ

V_c = contact tank volume, million gal

V_s = stabilization tank volume, million gal

f. Calculate the system oxygen required and select 1.25-1.5 lb O_2/lb BOD_r.

$$O_2 = (1.25\text{-}1.5)Q_{avg} \times S_r(8.34)$$

where

O_2 = required oxygen, lb/day

Q_{avg} = average flow, mgd

S_r = BOD removed ($S_o - S_e$), mg/ℓ

Supply approximately one-half of O_2 for contact tank and one-half for stabilization tank.

g. Design aeration system.

(1) Diffused aeration system.

(a) Assume the following design parameters.

1 Standard transfer efficiency, percent, from manufacturer (5-8 percent).

2 O_2 transfer in waste/O_2 transfer in water ≈0.9.

3 O_2 saturation in waste/O_2 saturation in water ≈0.9.

4 Correction factor for pressure ≈1.0.

(b) Select summer operating temperature (25-30°C) and determine (from standard tables) O_2 saturation.

(c) Adjust standard transfer efficiency to operating conditions.

$$OTE = STE \frac{\left[\left(C_s\right)_T (\beta)(p) - C_L\right]}{9.17} \alpha(1.02)^{T-20}$$

where

OTE = operating transfer efficiency, percent

STE = standard transfer efficiency, percent

$(C_s)_T$ = O_2 saturation at selected summer temperature T, °C, mg/ℓ

β = O_2 saturation in waste/O_2 saturation in water ≈0.9

p = correction factor for pressure ≈1.0

C_L = minimum dissolved oxygen to be maintained in the basin ⩾ 2.0 mg/ℓ

α = O_2 transfer in waste/O_2 transfer in water ≈0.9

T = temperature, °C

(d) Calculate required air flow.

$$R_a = \frac{O_2(10^5)(7.48)}{(OTE)\left(0.0176 \frac{lb\ O_2}{ft^3\ air}\right)\left(1440 \frac{min}{day}\right)V}$$

where

R_a = required air flow, cfm/1000 ft^3

O_2 = required oxygen, lb/day

OTE = operating transfer efficiency, percent

V = volume of basin (V_s + V_c), gal

(2) Mechanical aeration system.

(a) Assume the following design parameters.

1 Standard transfer efficiency, lb/hp-hr (0 dissolved oxygen, 20°C, and tap water).

2 O_2 transfer in waste/O_2 transfer in water ≈0.9.

3 O_2 saturation in waste/O_2 saturation in water ≈0.9.

4 Correction factor for pressure ≈1.0.

(b) Select summer operating temperature (25-30°C) and determine (from standard tables) O_2 saturation.

(c) Adjust standard transfer efficiency to operating conditions.

$$OTE = STE \frac{\left[\left(C_s\right)_T (\beta)(p) - C_L\right]}{9.17} \alpha(1.02)^{T-20}$$

where

OTE = operating transfer efficiency, lb O_2/hp-hr

STE = standard transfer efficiency, lb O_2/hp-hr

$\left(C_s\right)_T$ = O_2 saturation at selected summer temperature T, °C, mg/ℓ

β = O_2 saturation in waste/O_2 saturation in water ≈ 0.9

p = correction factor for pressure ≈ 1.0

C_L = minimum dissolved oxygen to be maintained in the basin $\geqslant$ 2.0 mg/ℓ

α = O_2 transfer in waste/O_2 transfer in water ≈ 0.9

T = temperature, °C

(d) Calculate horsepower requirement.

$$hp = \frac{O_2}{OTE \frac{lb\ O_2}{hp\text{-}hr} (24)(V)} \times 1000$$

where

hp = horsepower required/1000 gal

O_2 = oxygen required, lb/day

OTE = operating transfer efficiency

V = volume of basin ($V_s + V_c$), gal

h. Determine sludge production. Select 0.2-0.4 lb solids/lb BOD_r.

$$\Delta X_V = (0.2\text{-}0.4)Q(S_r)8.34$$

where

ΔX_V = sludge produced, lb/day

Q = flow, mgd

S_r = BOD removed, mg/ℓ

i. Estimate effluent BOD_5.

$$\left(BOD_5\right)_{eff} = S_o\left(1 - \frac{BOD_r}{100}\right)$$

where

S_o = influent BOD_5, mg/ℓ

BOD_r = BOD removed, percent

j. Determine nutrient requirements for nitrogen

$$N = 0.123\Delta X_V$$

and phosphorus

$$P = 0.026\Delta X_V$$

where

ΔX_V = sludge produced, lb/day

and check against rule of thumb BOD:N:P = 100:5:1.

k. Determine recycle ratio required and check against 0.25-1.0.

$$\frac{Q_r}{Q} = \frac{X_{ac}}{X_{as} - X_{ac}}$$

where

Q_r = volume of recycled sludge, mgd

Q = total flow, mgd

X_{ac} = MLSS in contact tank, mg/ℓ

X_{as} = MLSS in stabilization tank, mg/ℓ

7-55. Output Data.

a. Aeration Tank.

(1) lb BOD/lb MLSS-day.

(2) Mixed liquor SS contact tank, mg/ℓ (MLSS).

(3) Mixed liquor SS stabilization tank, mg/ℓ $(MLSS)_s$.

(4) Aeration time contact tank, hr (t_c).

(5) Aeration time stabilization tank, hr (t_s).

(6) Volume of contact tank, million gal (V_c).

(7) Volume of stabilization tank, million gal (V_s).

(8) Oxygen required, lb/day.

(9) Sludge produced, lb/day.

(10) Nitrogen requirement, lb/day.

(11) Phosphorus requirement, lb/day.

(12) Sludge recycle ratio, percent.

(13) Volumetric loading, lb BOD/million ft^3

b. Diffused Aeration System.

(1) Standard transfer efficiency, percent.

(2) Operating efficiency, percent.

(3) Required air flow, cfm/1000 ft^3.

c. Mechanical Aeration System.

(1) Standard transfer efficiency, lb O_2/hp-hr.

(2) Operating transfer efficiency, lb O_2/hp-hr.

(3) Horsepower required.

7-56. Example Calculations.

a. Assume the following design parameters.

(1) Aeration time in contact tank, t_1 = 0.6 hr.

(2) Aeration time in stabilization tank, t_2 = 3.0 hr.

(3) MLSS in stabilization tank, X_{as} = 6000 mg/ℓ.

(4) MLSS in contact tank, X_{ac} = 3000 mg/ℓ.

(5) MLVSS in contact tank, $X_{vc} = 0.7X_{ac}$ = 2100 mg/ℓ.

(6) MLVSS in stabilization tank, $X_{VS} = 0.7X_{as}$ = 4200 mg/ℓ.

(7) O_2 requirements, 1.3 lb O_2/lb BOD_r.

(8) Sludge produced, 0.3 lb solids/lb BOD_r.

b. Determine contact tank volume.

$$V_c = Q_{avg}\left(\frac{t_1}{24}\right)$$

where

V_c = volume contact tank, million gal

Q_{avg} = average flow, 1.0 mgd

t_1 = detention time, 0.6 hr

$$V_c = 1.0\left(\frac{0.6}{24}\right)$$

$$\underline{V_c = 0.025 \text{ million gal}}$$

c. Determine stabilization tank volume.

$$V_s = Q_{avg}\left(\frac{t_2}{24}\right)$$

where

V_s = volume stabilization tank, million gal

Q_{avg} = average flow, 1.0 mgd

t_2 = detention time, 3.0 hr

$$V_s = 1.0\left(\frac{3.0}{24}\right)$$

$$\underline{V_s = 0.125 \text{ million gal}}$$

d. Calculate system organic loading (F/M = 0.2-0.6).

$$(F/M)_{system} = \frac{Q_{avg}(S_o)}{V_c(X_{vc}) + V_s(X_{vs})}$$

where

$(F/M)_{system}$ = system organic loading

Q_{avg} = average flow, 1.0 mgd

S_o = influent BOD_5, 200 mg/ℓ

V_c = volume of contact tank, 0.025 million gal

X_{vc} = MLVSS in contact tank, 2100 mg/ℓ

V_s = volume of stabilization tank, 0.125 million gal

X_{vs} = MLVSS in stabilization tank, 4200 mg/ℓ

$$(F/M)_{system} = \frac{1.0(200)}{0.025(2100) + 0.125(4200)}$$

$$\underline{(F/M)_{system} = 0.346 \text{ (OK)}}$$

e. Calculate volumetric loading and check against 60-75 lb/1000 ft^3.

$$lb/1000\ ft^3 = \frac{Q_{avg}(S_o)(62.4)}{(V_c + V_s)10^3}$$

where

Q_{avg} = average flow, 1.0 mgd

S_o = influent BOD, 200 mg/ℓ

V_c = volume of contact tank, 0.025 million gal

V_s = volume of stabilization tank, 0.125 million gal

$$lb/1000\ ft^3 = \frac{1.0(200)(62.4)}{(0.025 + 0.125)10^3}$$

$$\underline{lb/1000\ ft^3 = 83.2, \text{ slightly high but OK}}$$

f. Calculate system oxygen required and select 1.25-1.5 lb O_2/lb BOD_r.

$$O_2 = (1.25 \text{ to } 1.5)Q_{avg}(S_r)8.34$$

where

O_2 = oxygen required, lb/day

Q_{avg} = average flow, 1.0 mgd

S_r = BOD removed (200 - 10), 190 mg/ℓ

O_2 = 1.3(1.0)190(8.34)

$$\underline{O_2 = 2060 \text{ lb/day}}$$

g. Design aeration system (diffused).

(1) Assume the following parameters.

(a) STE = 5.0 percent

(b) $\alpha = 0.9$

(c) $\beta = 0.9$

(d) $p = 1.0$

(2) Select summer operating conditions (T = 25°C) and determine O_2 saturation.

$$\left(C_s\right)_T = 8.2 \text{ mg/ℓ}$$

(3) Adjust standard transfer efficiency to operating conditions.

$$OTE = STE \frac{\left[\left(C_s\right)_T (\beta)(p) - C_L\right]}{9.17} \alpha(1.02)^{T-25}$$

where

OTE = operating transfer efficiency, percent

STE = standard transfer efficiency, 5 percent

$\left(C_s\right)_T$ = O_2 saturation at T = 25°C, 8.2 mg/ℓ

$\beta = 0.9$

$p = 1.0$

C_L = minimum dissolved oxygen concentration, 2.0 mg/ℓ

$9.17 = O_2$ saturation at 20°C

$\alpha = 0.9$

$T = 25°C$

$$OTE = 5.0 \frac{[8.2(0.9)1.0 - 2.0]}{9.17} 0.9(1.02)^{25-20}$$

$$\underline{OTE = 2.9\%}$$

(4) Calculate required airflow.

$$R_a = \frac{O_2(10^5)7.48}{OTE(0.0176)1440(V)10^6}$$

where

R_a = required airflow, cfm/1000 ft^3

O_2 = oxygen required, 2060 lb/day

OTE = operating transfer efficiency, 2.9 percent

0.0176 = lb O_2/ft^3 air

$V = (V_s + V_c) = 0.15$ million gal

$$R_a = \frac{2060(10^5)7.48}{2.9(0.0176)1440(0.15)10^6}$$

$$\underline{R_a = 140 \text{ cfm}/1000 \text{ ft}^3}$$

h. Determine sludge production. Select (0.2-0.4) lb solids/lb BOD_r.

$$\Delta X_V = (0.2\text{-}0.4)Q(S_r)8.34$$

where

ΔX_V = sludge production, lb/day

Q = average flow, 1.0 mgd

S_r = BOD removed, 190 mg/ℓ

$$\Delta X_V = 0.3(1.0)(190)(8.34)$$

$$\underline{\Delta X_V = 475 \text{ lb/day}}$$

i. Estimate effluent BOD_5.

$$\left(BOD_5\right)_{eff} = S_o\left(1 - \frac{BOD_r}{100}\right)$$

where

$\left(BOD_5\right)_{eff}$ = effluent BOD_5

S_o = influent BOD_5, 200 mg/ℓ

BOD_r = BOD removed, 95%

$$\left(BOD_5\right)_{eff} = 200\left(1 - \frac{95}{100}\right)$$

$$\underline{\left(BOD_5\right)_{eff} = 10 \text{ mg/ℓ}}$$

j. Determine nutrient requirements for nitrogen

$$N = 0.123\Delta X_V$$

$$N = 0.123(475 \text{ lb/day})$$

$$\underline{N = 58.4 \text{ lb/day}}$$

for phosphorus

$$P = 0.026\ \Delta X_V$$

$$P = 0.026(475\ \text{lb/day})$$

$$\underline{P = 12.4\ \text{lb/day}}$$

$$N \text{ in influent} = 30\ \text{mg/}\ell(Q_{avg})8.34$$

$$= 30(1.0)8.34$$

$$= 250\ \text{lb/day} > 58.4$$

<u>N to be added = none</u>

$$P \text{ in influent} = 15\ \text{mg/}\ell(Q_{avg})8.34$$

$$= 15(1.0)8.34$$

$$= 125\ \text{lb/day} > 12.4$$

<u>P to be added = none</u>

k. Determine recycle ratio and check against (0.25-1.0).

$$\frac{Q_r}{Q} = \frac{X_{ac}}{X_{as} - X_{ac}}$$

where

Q_r = sludge recycle, mgd

Q = average flow, 1.0 mgd

X_{ac} = MLSS in contact tank, 3000 mg/ℓ

X_{as} = MLSS in stabilization tank, 6000 mg/ℓ

$$\frac{Q_r}{1.0} = \frac{3000}{6000 - 3000}$$

$$\underline{Q_r = 1.0}$$

7-57. Cost Data. Appropriate cost data and economic evaluation may be found in Chapter 8.

7-58. Bibliography.

a. American Public Health Association, American Society of Civil Engineers, American Water Works Association, and Water Pollution Control Federation, "Glossary, Water and Wastewater Control Engineering," 1969.

b. American Public Works Association, "Feasibility of Computer Control of Wastewater Treatment," Report No. 17090DOY, Dec 1970, U. S. Environmental Protection Agency, Washington, D. C.

c. American Society of Civil Engineers and the Water Pollution Control Federation, "Sewage Treatment Plant Design," Manual of Practice No. 8, 1959, 1961, 1967, and 1968, Water Pollution Control Federation, Washington, D. C.

d. Bargman, R. D. and Borgerding, J., "Characterization of the Activated Sludge Process," Report No. R2-73-224, Apr 1973, U. S. Environmental Protection Agency, Washington, D. C.

e. Busch, A. W., Aerobic Biological Treatment of Wastewaters, Oligodynamics Press, 1971.

f. Center for Research, Inc., University of Kansas, "Oxygen Consumption in Continuous Biological Culture," Report No. 17050DJS, May 1971, U. S. Environmental Protection Agency, Washington, D. C.

g. City of Austin, Texas, "Design Guides for Biological Wastewater Treatment Processes," Report No. 11010ESQ, Aug 1971, U. S. Environmental Protection Agency, Washington, D. C.

h. Eckenfelder, W. W., Jr., Industrial Water Pollution Control, McGraw-Hill, New York, 1966.

i. Eckenfelder, W. W., Jr., "General Concepts of Biological Treatment," Manual of Treatment Processes, Vol 1, 1969, Environmental Science Services, Inc., Briarcliff Manor, New York.

j. Eckenfelder, W. W., Jr., Water Quality Engineering for Practicing Engineers, Barnes and Nobel, New York, 1970.

k. Eckenfelder, W. W., Jr., "Activated Sludge and Extended Aeration," Process Design in Water Quality Engineering - New Concepts and Developments, 1971, Vanderbilt University, Nashville, Tenn.

l. Eckenfelder, W. W., Jr., and Ford, D. L., Water Pollution Control, Pemberton Press, New York, 1970.

m. Eckenfelder, W. W., Jr., and O'Connor, O. J., Biological Waste Treatment, Pergamon Press, New York, 1961.

n. Gaudy, A. G., Jr., and Gaudy, E. T., "Biological Concepts for Design and Operation of the Activated Sludge Process," Report No. 17090-FQJ, Sep 1971, U. S. Environmental Protection Agency, Washington, D. C.

o. Goodman, B. L., Design Handbook of Wastewater Systems: Domestic, Industrial, Commercial, Technomic, Westport, Conn., 1971.

p. Goodman, B. L. and Englande, A. J., Jr., "A Consolidated Approach to Activated Sludge Process Design," Conference on Toward a Unified Concept of Biological Waste Treatment Design, 5-6 Oct 1972, Atlanta, Ga.

q. Lawrence, A. W. and McCarty, P. L., "Unified Basis for Biological Treatment Design and Operation," Journal, Sanitary Engineering Division, American Society of Civil Engineers, Vol 96, SA3, 1970.

r. Maier, W. J., "Biological Removal of Colloidal Matter from Wastewater," Report No. R2-73-147, Jun 1973, U. S. Environmental Protection Agency, Washington, D. C.

s. McKinney, R. E., Microbiology for Sanitary Engineers, McGraw-Hill, New York, 1962.

t. Metcalf and Eddy, Inc., Wastewater Engineering; Collection, Treatment, and Disposal, McGraw-Hill, New York, 1972.

u. Okun, D. A., "System of Bio-Precipitation of Organic Matter from Sewage," Sewage Works Journal, Vol 21, No. 5, 1949, pp 763-794.

v. Smith, H. S., "Homogeneous Activated Sludge Principles and Features of the Activated Sludge Process," Water and Wastes Engineering, Vol 4, Jul 1967, pp 46-50.

w. Smith, R. and Eilers, R. G., "A Generalized Computer Model for Steady-State Performance of the Activated Sludge Process," FWQA Report No. TWRC-15, Oct 1969, Robert A. Taft Water Research Center, Cincinnati, Ohio.

x. Stensel, H. D. and Shell, G. L., "Two Methods of Biological Treatment Design," Journal, Water Pollution Control Federation, Vol 46, Feb 1974, pp 271-283.

y. Stewart, M. J., "Activated Sludge System Variations - Specific Applications," The 15th Ontario Industrial Waste Conference, 9-12 Jun 1968, Niagara Falls, Ontario.

z. Toerber, E. D., "Full Scale Parallel Activated Sludge Process Evaluation," Report No. R2-72-065, Nov 1972, U. S. Environmental Protection Agency, Washington, D. C.

aa. Weston, R. F., "Design of Sludge Reaeration Activated Sludge Systems," Journal, Water Pollution Control Federation, Vol 33, No. 7, 1961, pp 748-757.

Section IX. PURE OXYGEN ACTIVATED SLUDGE

7-59. Background.

a. As early as 1949, Okun (para 7-66w) reported the results of tests using pure oxygen as a substitute for air in the activated sludge process.

b. The pure oxygen system may be used for aeration in activated sludge systems that operate in either the plug flow or complete mix hydraulic regimes. It is readily adaptable to new or existing complete mix systems and can be used to upgrade and extend the life of overloaded plug-flow systems. To use the pure oxygen system, the aeration tanks must be covered and the oxygen introduced should be recirculated (para 7-66a). The amount of oxygen that can be injected into the liquid (for a specific set of conditions) is approximately four times the amount that could be injected with an air system. Adjustment of pH may be necessary to maintain a proper balance between the CO_2 removed and buffer capacity of the wastewater.

c. Several advantages, such as increased bacterial activity, reduced aeration tank volume, decreased sludge volume, and better settling sludge have been cited for pure oxygen aeration (para 7-66a). To substantiate these findings, however, further testing of this process in a number of varying applications will be necessary. Several references (o, u, and w, para 7-66) discuss the characteristics and application of pure oxygen aeration.

7-60. Input Data.

a. Wastewater Flow (Average and Peak). In case of high variability, a statistical distribution should be provided.

b. Wastewater Strength.

(1) BOD_5 (soluble and total), mg/ℓ.

(2) COD and/or TOC (maximum and minimum), mg/ℓ.

(3) Suspended solids, mg/ℓ.

(4) Volatile suspended solids (VSS), mg/ℓ.

(5) Nonbiodegradable fraction of VSS, mg/ℓ.

c. Other Characterization.

(1) pH.

(2) Acidity and/or alkalinity, mg/ℓ.

(3) Nitrogen,[1] mg/ℓ.

(4) Phosphorus (total and soluble), mg/ℓ.

(5) Oils and greases, mg/ℓ.

(6) Heavy metals, mg/ℓ.

(7) Toxic or special characteristics (e.g., phenols), mg/ℓ.

(8) Temperature, °F or °C.

d. Effluent Quality Requirements.

(1) BOD_5, mg/ℓ.

(2) SS, mg/ℓ.

(3) TKN, mg/ℓ.

(4) P, mg/ℓ.

(5) Total nitrogen (TKN + NO_3-N), mg/ℓ.

(6) Settleable solids, mg/ℓ.

7-61. Design Parameters.

a. Reaction rate constants and coefficients.

---

[1] The form of nitrogen should be specified as to its biological availability (e.g., NH_3 or Kjeldahl).

Constants	Range
McKinney	
K_m	15/hr at 20°C
K_s	10.4/hr at 20°C
K_e	0.02/hr at 20°C
Eckenfelder	
k	0.0007-0.002 ℓ/mg/hr
a	0.73
a'	0.52
b	0.075/day
b'	0.15/day
f	0.40
f'	0.53

b. F/M = (0.25-1.0).

c. Volumetric loading = 150-200.

d. t = (2-4) hr.

e. t_s = (3-20) days, depending on application.

f. MLSS = (4000-7000) mg/ℓ, mean 5000 mg/ℓ.

g. MLVSS = (3200-5600) mg/ℓ.

h. Q_r/Q = (0.25-0.5) = recycle ratio.

i. lb O_2/lb BOD_r = 1.0-1.5 lb.

j. lb solids/lb BOD_r = (0.3-0.45).

k. Θ = (1.0-1.03).

l. Efficiency = (>90 percent).

7-62. Design Procedure.

a. McKinney's Approach.

(1) Assume the following design parameters.

(a) Metabolism constant (K_m).

(b) Synthesis factor (K_s).

(c) Endogenous respiration factor (K_e).

(d) Temperature correction coefficient (Θ).

(e) Hydraulic detention time (t).

(f) Solids retention time (t_s).

(2) Adjust metabolism constant, synthesis factor, and endogenous respiration factor for temperature.

$$K_T = K_{20}\Theta^{(T-20)}$$

where

K_T = rate constant at desired temperature T, °C

K_{20} = rate constant at 20°C

Θ = temperature coefficient

T = temperature, °C

(3) Determine size of the aeration tank.

$$V = Q_{avg}\ t/24$$

where

V = volume of tank, million gal

Q_{avg} = average flow, mgd

t = hydraulic detention tine, hr

(4) Determine soluble effluent BOD_5.

$$F_e = \frac{F_i}{1 + K_m t}$$

where

F_e = soluble effluent BOD_5, mg/ℓ

F_i = influent BOD_5, mg/ℓ

K_m = metabolism constant (15/hr at 20°C)

t = hydraulic detention time, hr

and check $F_e \leq 10$ mg/ℓ ; if $F_e > 10$ mg/ℓ , increase t and recalculate new F_e.

(5) Calculate the MLSS concentration.

$$M_T = M_a + M_e + M_i + M_{ii}$$

$$M_a = \frac{K_s F_e}{K_e + 1/24t_s}$$

$$M_e = 0.2K_e M_a t_s(24)$$

$$M_i = SS_i \times \frac{24t_s}{t}$$

$$M_{ii} = SS_{ii} \times \frac{24t_s}{t} + 0.1(M_a + M_e)$$

where

M_T = total mass, mg/ℓ

M_a = living, active mass, mg/ℓ

M_e = endogenous mass, mg/ℓ

M_i = inert nonbiodegradable organic mass, mg/ℓ

M_{ii} = inert inorganic suspended solids, mg/ℓ

K_s = synthesis factor, 1/hr (10.4/hr at 20°C)

F_e = effluent BOD_5, mg/ℓ

K_e = endogenous respiration factor, 1/hr (0.02/hr at 20°C)

t_s = solids retention time, days

SS_i = inert organic SS in influent, mg/ℓ

= VSS × percent nonbiodegradable (≈0.4 VSS for municipal waste)

SS_{ii} = inert inorganic SS fraction in the influent

and check M_T against 4000-7000 mg/ℓ; vary t_s or t until M_T falls within desired range.

(6) Check organic loading against 0.25-1.0.

$$F/M = \frac{24F_i}{M_T t}$$

where

F/M = food-to-microorganism ratio

F_i = influent BOD_5, mg/ℓ

M_T = total mass, mg/ℓ

t = hydraulic detention time, hr

If F/M < lower limit, it is possible to reduce t and recalculate M_T.

If F/M > upper limit, increase t and recalculate M_T.

(7) Calculate the oxygen requirements.

(a) Select the oxygen uptake rate. The average rate of oxygen demand, if the waste load is uniform, is given by

$$\frac{dO}{dt} = \frac{1.5(F_i - F_e)}{t} - \frac{1.42(M_a + M_e)}{24t_s}$$

where

dO/dt = average oxygen uptake rate under uniform flow conditions, mg/ℓ

F_i = influent BOD_5, mg/ℓ

F_e = soluble effluent BOD_5, mg/ℓ

t = hydraulic detention time, hr

M_a = living, active mass, mg/ℓ

M_e = endogenous mass, mg/ℓ

t_s = solids retention time, days

Under conditions where the load varies, the oxygen uptake is equal to the synthesis oxygen demand plus the endogenous respiration oxygen demand or

$$\frac{dO}{dt} = \left[\frac{0.5(F_i - F_e)}{t}\right]\frac{Q_p}{Q_{avg}} + 1.14K_eM_a$$

$$\text{lb } O_2/\text{hr} = \frac{dO}{dt} \times V \times 8.34$$

where

Q_p = peak flow, mgd

Q_{avg} = average flow, mgd

K_e = endogenous respiration factor, hr (0.02/hr at 20°C)

(b) Check oxygen supplied per pound of BOD removed >1.25.

$$\frac{\text{lb } O_2/\text{hr } (24)}{Q(F_i - F_e)8.34}$$

(8) Design aeration system and check horsepower for complete mixing against horsepower required for complete mixing $\geq$0.1 hp/1000 gal; select the larger horsepower.

(a) Diffused Aeration System.

1 Assume the following design parameters.

a Standard transfer efficiency, percent, from manufacturer.

b O_2 transfer in waste/O_2 transfer in water $\approx$0.9.

c O_2 saturation in waste/O_2 saturation in water $\approx$0.9.

d Correction factor for pressure $\approx$1.0.

2 Select summer operating temperature (25-30°C) and determine (from standard tables) O_2 saturation.

3 Adjust standard transfer efficiency to operating conditions.

$$\text{OTE} = \text{STE} \frac{\left[(C_s)_T (\beta)(p) - C_L\right]}{9.17} \alpha(1.02)^{T-20}$$

where

OTE = operating transfer efficiency, percent

STE = standard transfer efficiency, percent

$(C_s)_T$ = O_2 saturation at selected summer temperature T, °C, mg/ℓ

β = O_2 saturation in waste/O_2 saturation in water ≈ 0.9

p = correction factor for pressure ≈ 1.0

C_L = minimum dissolved oxygen to be maintained in the basin $\geqslant 2.0$ mg/ℓ

α = O_2 transfer in waste/O_2 transfer in water ≈ 0.9

T = temperature, °C

4 Calculate required air flow.

$$R_a = \frac{O_2(10^5)(7.48)}{(OTE)\left(1440 \frac{min}{day}\right)V(CF)}$$

where

R_a = required air flow, cfm/1000 ft^3

O_2 = oxygen required, lb/day

OTE = operating transfer efficiency, percent

V = volume of basin, gal

CF = correction factor, lb O_2/ft^3 air

(b) Mechanical Aeration System.

1 Assume the following design parameters.

a Standard transfer efficiency, lb/hp-hr (0 dissolved oxygen, 20°C, and tap water).

b O_2 transfer in waste/O_2 transfer in water ≈ 0.9.

c O_2 saturation in waste/O_2 saturation in water ≈ 0.9.

d Correction factor for pressure ≈ 1.0.

2 Select summer operating temperature (25-30°C), and determine (from standard tables) O_2 saturation.

3 Adjust standard transfer efficiency to operating conditions.

$$OTE = STE \frac{\left[\left(C_s\right)_T (\beta)(p) - C_L\right]}{9.17} \alpha(1.02)^{T-20}$$

where

OTE = operating transfer efficiency, lb O_2/hp-hr

STE = standard transfer efficiency, lb O_2/hp-hr

$\left(C_s\right)_T$ = O_2 saturation at selected summer temperature T, °C, mg/ℓ

β = O_2 saturation in waste/O_2 saturation in water $\approx$0.9

p = correction factor for pressure $\approx$1.0

C_L = minimum dissolved oxygen to be maintained in the basin $\geqslant$ 2.0 mg/ℓ

α = O_2 transfer in waste/O_2 transfer in water $\approx$0.9

T = temperature, °C

4 Calculate horsepower requirement.

$$hp = \frac{O_2}{\left(OTE \frac{lb\ O_2}{hp\text{-}hr}\right)(24)(V)} \times 1000$$

where

hp = horsepower required/1000 gal

O_2 = oxygen required, lb/day

OTE = operating transfer efficiency, lb O_2/hp-hr

V = volume of basin, gal

(9) Calculate sludge production and determine pounds of sludge wasted per day.

$$\Delta M_T = \frac{M_T V(8.34)}{t_s}$$

where

ΔM_T = sludge produced, lb/day

M_T = total mass, mg/ℓ

V = volume of aeration tank, million gal

t_s = solids retention time, days

(10) Check solids produced per pound of BOD removed.

$$\frac{\text{lb solids}}{\text{lb BOD}_r} = \frac{\Delta M_T}{Q(F_i - F_e)8.34}$$

where

ΔM_T = sludge produced, lb/day

Q = flow, mgd

F_i = influent BOD_5, mg/ℓ

F_e = effluent BOD_5, mg/ℓ

(11) Calculate sludge recycle ratio.

$$\frac{Q_r}{Q} = \frac{M_T}{M_u - M_T}$$

where

Q_r = volume of recycled sludge, mgd

Q = flow, mgd

M_T = total mass, mg/ℓ

M_u = solids concentration in return sludge, mg/ℓ

(12) Calculate total effluent BOD_5.

$$\left(BOD_5\right)_{eff} = S_e + 0.84(SS_{eff})\left(\frac{M_a}{M_T}\right)(0.76)$$

where

S_e = effluent soluble BOD, mg/ℓ

$(SS)_{eff}$ = effluent suspended solids, mg/ℓ

M_a = living mass, mg/ℓ

M_T = total mass, mg/ℓ

(13) Determine nutrient requirements for nitrogen

$$N = 0.123\Delta M_T (\text{or } X_V)$$

and phosphorus

$$P = 0.026\Delta M_T (\text{or } X_V)$$

where

ΔM_T = sludge produced, lb/day

ΔX_V = sludge produced, lb/day

and check against BOD:N:P = 100:5:1

b. Eckenfelder's Approach.

(1) Assume the following design parameters when unknown.

(a) BOD removal rate constant (k).

(b) Fraction of BOD synthesized (a).

(c) Fraction of BOD oxidized for energy (a').

(d) Endogenous respiration rate (b and b').

(e) Mixed liquor suspended solids (MLSS).

(f) Mixed liquor volatile suspended solids (MLVSS).

(g) Food-to-microorganism ratio (F/M).

(h) Nonbiodegradable fraction of VSS in influent (f).

(i) Degradable fraction of the MLVSS (f').

(j) Temperature correction coefficient (Θ).

(2) Adjust rate constant for temperature.

$$K_T = K_{20}\Theta^{(T-20)}$$

where

K_T = rate constant at desired temperature, °C

K_{20} = rate constant at 20°C

Θ = temperature correction coefficient

T = temperature, °C

(3) Determine the size of the aeration tank by first determining the detention time t .

$$t = \frac{24S_o}{(X_V)(F/M)}$$

where

t = detention time, hr

S_o = influent BOD, mg/ℓ

X_V = MLVSS, mg/ℓ

F/M = food-to-microorganism ratio

(4) Check detention time for treatability.

$$\frac{S_e}{S_o} = \frac{1}{1 + kX_V T}$$

where

S_e = BOD_5 (soluble) in effluent, mg/ℓ

S_o = BOD_5 in influent, mg/ℓ

k = BOD removal rate constant, 1/mg/hr

X_V = MLVSS, mg/ℓ

t = detention time, hr

Solve for t and compare with t above and select the larger.

(5) Calculate the volume of aeration tank.

$$V = Q_{avg} \times \frac{t}{24}$$

where

V = volume, million gal

Q_{avg} = average daily flow, mgd

t = detention time, hr

(6) Calculate oxygen requirements.

$$\frac{dO}{dt} = \frac{a'S_r}{t} + b'X_V$$

or

$$O_2 = a'(S_r)(Q_{avg})(8.34) + b'(X_V)(V)(8.34)$$

where

dO/dt = oxygen uptake rate, mg/ℓ/hr

a' = fraction of BOD oxidized for energy

S_r = BOD removed ($S_o - S_e$), mg/ℓ

t = detention time, hr

b' = endogenous respiration rate, 1/hr

X_V = MLVSS

O_2 = oxygen requirement, lb/day

Q_{avg} = average flow rate, mgd

V = volume of aeration tank, million gal

and check the oxygen supplied against ≥ 1.25

$$\text{lb } O_2/\text{lb BOD}_r = \frac{O_2}{Q(S_r) \times 8.34}$$

where

O_2 = oxygen required, lb/day

Q = flow, mgd

S_r = BOD removed, mg/ℓ

(7) Design aeration system and check horsepower supply for mixing against horsepower required for complete mixing ≤ 0.1 hp/1000 gal.

(a) Diffused Aeration System.

1 Assume the following design parameters.

a Standard transfer efficiency, percent, from manufacturer.

b O_2 transfer in waste/O_2 transfer in water ≈ 0.9.

c O_2 saturation in waste/O_2 saturation in water ≈ 0.9.

d Correction factor for pressure ≈ 1.0.

2 Select summer operating temperature (25-30°C) and determine (from standard tables) O_2 saturation.

3 Adjust standard transfer efficiency to operating conditions.

$$OTE = STE \frac{\left[(C_s)_T (\beta)(p) - C_L\right]}{9.17} \alpha(1.02)^{T-20}$$

where

OTE = operating transfer efficiency, percent

STE = standard transfer efficiency, percent

$(C_s)_T$ = O_2 saturation at selected summer temperature T, °C, mg/ℓ

β = O_2 saturation in waste/O_2 saturation in water ≈ 0.9

p = correction factor for pressure ≈ 1.0

C_L = minimum dissolved oxygen to be maintained in the basin $\geqslant 2.0$ mg/ℓ

α = O_2 transfer in waste/O_2 transfer in water ≈ 0.9

T = temperature, °C

4 Calculate required air flow.

$$R_a = \frac{O_2(10^5)(7.43)}{(OTE)\left(1440 \frac{min}{day}\right)V(CF)}$$

where

R_a = required air flow, cfm/1000 ft^3

O_2 = required oxygen, lb/day

OTE = operating transfer efficiency, percent

V = volume of basin, gal

CF = correction factor, lb O_2/ft^3 air

(b) Mechanical Aeration System.

1 Assume the following design parameters.

a Standard transfer efficiency, lb/hp-hr (0 dissolved oxygen, 20°C, and tap water.

b O_2 transfer in waste/O_2 transfer in water $\approx$0.9.

c O_2 saturation in waste/O_2 saturation in water $\approx$0.9.

d Correction factor for pressure $\approx$1.0.

2 Select summer operating temperature (25°C-30°C) and determine (from standard tables) O_2 saturation.

3 Adjust standard transfer efficiency to operating conditions.

$$OTE = STE \frac{\left[\left(C_s\right)_T (\beta)(p) - C_L\right]}{9.17} \alpha(1.02)^{T-20}$$

where

OTE = operating transfer efficiency, lb O_2/hp-hr

STE = standard transfer efficiency, lb O_2/hp-hr

$\left(C_s\right)_T$ = O_2 saturation at selected summer temperature T, °C, mg/ℓ

β = O_2 saturation in waste/O_2 saturation in water $\approx$0.9

p = correction factor for pressure $\approx$1.0

C_L = minimum dissolved oxygen to be maintained in the basin $\geqslant$ 2.0 mg/ℓ

α = O_2 transfer in waste/O_2 transfer in water

T = temperature, °C

4 Calculate horsepower requirement.

$$hp = \frac{O_2}{OTE\left(\frac{lb\ O_2}{hp\text{-}hr}\right)(24)(V)} \times 1000$$

where

hp = horsepower required/1000 gal

O_2 = oxygen required, lb/day

OTE = operating transfer efficiency, lb O_2/hp-hr

V = volume of basin, gal

(8) Calculate sludge production.

$$\Delta X_V = [aS_rQ_{avg} - bX_vV + fQ(VSS) + Q(SS - VSS)]8.34$$

where

ΔX_V = sludge produced, lb/day

a = fraction of BOD removed synthesized to cell material

S_r = BOD removed, mg/ℓ

Q_{avg} = average flow, mgd

b = endogenous respiration rate/day

X_V = volatile solids in raw sludge, mg/ℓ

V = volume of basin, gal

f = nonbiodegradable fraction of influent VSS

Q = flow, mgd

VSS = volatile suspended solids in effluent, mg/ℓ

SS = suspended solids in influent, mg/ℓ

(9) Check ΔX_V against 0.3-0.45.

$$\frac{\text{lb solids}}{(\text{lb BOD}_r)} = \frac{\Delta X_V}{S_r(Q)(8.34)}$$

where

ΔX_V = sludge produced, lb/day

S_r = BOD removed, mg/ℓ

Q = flow, mgd

(10) Calculate sludge recycle ratio.

$$\frac{Q_r}{Q} = \frac{X_a}{X_u - X_a}$$

where

Q_r/Q = sludge recycle ratio

Q_r = volume of recycled sludge, mgd

Q = flow, mgd

X_a = MLSS, mg/ℓ

X_u = solids concentration in return sludge, mg/ℓ

(11) Calculate solids retention time.

$$\text{SRT} = \frac{(V)X_a(8.34)}{\Delta X_a}$$

where

SRT = solids retention time, days

$$\Delta X_a = \frac{\Delta X_a}{\%\ \text{volatile}}$$

(12) Calculate effluent BOD_5.

$$\left(BOD_5\right)_{eff} = S_e + 0.84\left(X_V\right)_{eff} f'$$

where

S_e = effluent soluble BOD, mg/ℓ

$\left(X_V\right)_{eff}$ = effluent volatile suspended solids, mg/ℓ

f' = degradable fraction of MLVSS

(13) Determine nutrient requirements for nitrogen

$$N = 0.123\Delta M_T (\text{or } \Delta X_V)$$

and phosphorus

$$P = 0.026\Delta M_T (\text{or } \Delta X_V)$$

where

ΔM_T = sludge produced, lb/day

ΔX_V = sludge produced, lb/day

and check against BOD:N:P = 100:5:1.

7-63. Output Data.

a. Aeration Tank.

(1) Reaction rate constant, l/mg/hr.

(2) Sludge produced per BOD removed.

(3) Endogenous respiration rate (b, b').

(4) O_2 = utilized per BOD removed.

(5) Influent nonbiodegradable VSS (f).

(6) Effluent degradable VSS (f').

(7) lb BOD/lb MLVSS-day (F/M ratio).

(8) Mixed liquor SS, mg/ℓ (MLSS).

(9) Mixed liquor VSS, mg/ℓ (MLVSS).

(10) Aeration time, hr.

(11) Volume of aeration tank, million gal.

(12) Oxygen required, lb/day.

(13) Sludge produced, lb/day.

(14) Nitrogen requirement, lb/day.

(15) Phosphorus requirement, lb/day.

(16) Sludge recycle ratio, percent.

(17) Solids retention time, days.

b. Diffused Aeration System.

(1) Standard transfer efficiency, percent.

(2) Operating transfer efficiency, percent.

(3) Required air flow, cfm/1000 ft^3.

c. Mechanical Aeration System.

(1) Standard transfer efficiency, lb O_2/hp-hr.

(2) Operating transfer efficiency, lb O_2/hp-hr.

(3) Horsepower required.

7-64. Example Calculations. Eckenfelder's Approach.

a. Assume the following design parameters.

(1) $K = 0.0012\ \ell/mg\text{-}hr$

(2) $a = 0.73$

(3) $a' = 0.5$

(4) $b = 0.075/day$, $b' = 0.15/day$

(5) $MLSS = X_a = 3000\ mg/\ell$

(6) $MLVSS = X_V = 2400\ mg/\ell$

(7) $F/M = 0.40$ lb BOD/lb MLVSS-day

(8) $f = 0.40$

(9) $f' = 0.53$

(10) $\theta = 1.03$

b. Adjust the BOD removal rate constant for winter conditions, $T = 15°C$.

$$K_T = K_{20}\theta^{T-20}$$

where

K_T = rate constant at temperature T

K_{20} = rate constant at 20°C, 0.0012 ℓ/mg-hr

T = temperature, 15°C

θ = temperature correction coefficient, 1.03

$$K_T = 0.0012(1.03)^{15-20}$$

$$\underline{K_T = 0.0010\ \ell/mg\text{-}hr}$$

c. Determine size of aeration tank by determining detention time.

$$t = \frac{24S_o}{X_V(F/M)}$$

where

t = hydraulic detention time, hr

S_o = influent BOD, 200 mg/ℓ

X_V = MLVSS, 2400 mg/ℓ

F/M = food-to-microorganism ratio, 0.40 lb BOD/lb MLVSS

$$t = \frac{24(200)}{2400(0.40)}$$

$$\underline{t = 5.0 \text{ hr}}$$

d. Check detention for treatability.

$$\frac{S_e}{S_o} = \frac{1}{1 + KX_V t}$$

where

S_e = effluent BOD_5(soluble), 10 mg/ℓ

S_o = influent BOD_5, 200 mg/ℓ

K = BOD removal rate constant, 0.001 ℓ/mg/hr

X_V = MLVSS, 2400 mg/ℓ

t = detention time, hr

$$\frac{10}{200} = \frac{1}{1 + (0.001)2400(t)}$$

$$\underline{t = 7.9 \text{ hr} > 5.0 \text{ hr}}$$

e. Calculate the volume of the aeration tank.

$$V = Q_{avg}\left(\frac{t}{24}\right)$$

where

V = volume, million gal

Q_{avg} = average flow, 1.0 mgd

t = detention time, 7.9 hr

$$V = 1.0\left(\frac{7.9}{24}\right)$$

$$\underline{V = 0.329 \text{ million gal}}$$

f. Calculate oxygen requirements.

$$O_2 = a'S_rQ_{avg}(8.34) + b'X_VV8.34$$

where

O_2 = oxygen required, lb/day

a' = 0.52

S_r = BOD removed ($S_o - S_e$), 190 mg/ℓ

Q_{avg} = average flow, 1.0 mgd

b' = 0.15/day

X_V = MLVSS, 2400 mg/ℓ

V = volume of aeration tank, 0.329 million gal

$$O_2 = 0.52(190)1.0(8.34) + 0.15(2400)0.329(8.34)$$

$$\underline{O_2 = 1812 \text{ lb/day}}$$

Check oxygen supplied per lb BOD removed >1.25.

$$\text{lb } O_2/\text{lb BOD}_r = \frac{O_2}{Q(S_r)8.34}$$

where

O_2 = oxygen required, 1812 lb/day

Q = average flow, 1.0 mgd

S_r = BOD removed, 190 mg/ℓ

$$\text{lb } O_2/\text{lb BOD}_r = \frac{1812}{1.0(190)8.34}$$

$$\text{lb } O_2/\text{lb BOD}_r = 1.14 < 1.25$$

Therefore

$$O_2 = 1.25 \text{ BOD}_r$$

$$O_2 = 1.25Q(S_r)8.34$$

$$O_2 = 1.25(1.0)190(8.34)$$

$$\underline{O_2 = 1980 \text{ lb/day}}$$

g. Design aeration system (mechanical surface).

(1) Assume the following parameters

STE = 5.0 percent

$\alpha = 0.9$

$\beta = 0.9$

p = pressure correction factor, 1.0

(2) Select summer operating temperature and determine O_2 saturation. $T = 25°C$, $(C_s)_T = 8.2$ mg/ℓ.

(3) Determine operating transfer efficiency.

$$OTE = STE \frac{\left[\left(C_s\right)_T \beta p - C_L\right]}{9.17} \alpha 1.02^{T-20}$$

where

OTE = operating transfer efficiency, percent

STE = standard transfer efficiency, 5.0 percent

$\left(C_s\right)_T$ = 8.2 mg/ℓ

C_L = minimum dissolved oxygen, 2.0 mg/ℓ

T = 25°C, α = 0.9, β = 0.9

9.17 = O_2 saturation at 20°C

$$OTE = 5.0 \frac{[8.2(0.9)1.0 - 2.0]}{9.17} 0.9(1.02)^{25-20}$$

$$\underline{OTE = 2.9\% \text{ or } 1b\ O_2/hp\text{-}hr}$$

(4) Calculate horsepower requirements.

$$hp = \frac{O_2}{OTE(24)V}$$

where

hp = horsepower requirements, hp/1000 gal

O_2 = oxygen required, 1980 lb/day

OTE = operating transfer efficiency, 2.9 percent

V = volume of aeration tank, 0.329 million gal

$$hp = \frac{1980}{2.9(24)0.329(1000)}$$

$$\underline{hp = 0.09\ hp/1000\ gal < 0.1\ hp/1000\ gal}$$

Therefore, use hp = 0.1 hp/1000 gal

$$hp = 0.1(V)1000$$

$$hp = 0.1(0.329)1000$$

$$\underline{hp = 32.9 \text{ hp (use 35 hp)}}$$

h. Calculate sludge production

$$\Delta X_V = [a(S_r)Q_{avg} - bX_V(V) + Q_{avg}(VSS)f + Q_{avg}(SS - VSS)]8.34$$

where

ΔX_V = sludge produced, lb/day

a = 0.73

S_r = BOD removed, 190 mg/ℓ

Q_{avg} = 1.0 mgd

b = 0.075/day

X_V = 2400 mg/ℓ

V = 0.329 million gal

VSS = effluent volatile suspended solids, 150 mg/ℓ

f = 0.40

SS = suspended solids in influent, 200 mg/ℓ

$$\Delta X_V = [0.73(190)1.0 - 0.075(2400)0.329 + 1.0(150)0.40 + 1.0(200 - 150)]8.34$$

$$\underline{\Delta X_V = 1580 \text{ lb/day}}$$

i. Calculate solids produced per pound of BOD_5 removed and check ΔX_V > 0.5-0.7.

$$\frac{\text{lb solids}}{\text{lb BOD}_r} = \frac{\Delta X_V}{S_r(Q)8.34}$$

where

ΔX_V = solids produced, 1580 lb/day

S_r = BOD removed ($S_o - S_e$), 190 mg/ℓ

Q = average flow, 1.0 mgd

$$\frac{\text{lb solids}}{\text{lb BOD}_r} = \frac{1580}{1.90(1.0)8.34}$$

$$\underline{\frac{\text{lb solids}}{\text{lb BOD}_r} = 1.0 > 0.5\text{-}0.7 \text{ (OK)}}$$

j. Calculate sludge recycle ratio

$$\frac{Q_r}{Q} = \frac{X_a}{X_u - X_a}$$

where

Q_r = volume of recycled sludge, mgd

Q = average flow, 1.0 mgd

X_a = MLSS, 3000 mg/ℓ

X_u = return sludge concentration, 10,000 mg/ℓ

$$\frac{Q_r}{1.0} = \frac{3,000}{10,000 - 3,000}$$

$$\underline{Q_r = 0.429 \text{ mgd}}$$

k. Calculate solids retention time.

$$\text{SRT} = \frac{V(X_a)8.34}{\Delta X_a}$$

where

SRT = solids retention time, days

V = volume of aeration tank, 0.329 million gal

X_a = MLSS, 3000 mg/ℓ

$\Delta X_a = \Delta X_V/\%$ volatile = 1580/0.80 = 1975 lb/day

$$SRT = \frac{0.329(3000)8.34}{1975}$$

$$\underline{SRT = 4.2 \text{ days}}$$

1. Calculate effluent BOD_5.

$$\left(BOD_5\right)_{eff} = S_e + 0.84(X_V)_{eff} f'$$

where

$\left(BOD_5\right)_{eff}$ = effluent BOD_5, mg/ℓ

S_e = effluent soluble BOD_5, 10 mg/ℓ

$\left(X_V\right)_{eff}$ = effluent volatile suspended solids, 20 mg/ℓ

f' = 0.53

$$\left(BOD_5\right)_{eff} = 10 + 0.84(20)0.53$$

$$\underline{\left(BOD_5\right)_{eff} = 19 \text{ mg/ℓ}}$$

m. Determine nutrient requirements for nitrogen

$$N = 0.123\Delta X_V$$

$$N = 0.123(1580)$$

$$\underline{N = 194 \text{ lb/day}}$$

for phosphorus

$$P = 0.026\Delta X_V$$

$$P = 0.026(1580)$$

$$\underline{P = 41 \text{ lb/day}}$$

$$\text{N in influent} = 30 \text{ mg/}\ell(Q_{avg})8.34$$

$$= 30(1.0)8.34$$

$$= 250 \text{ lb/day} > 194 \text{ lb/day required}$$

$$\underline{\text{N to be added} = \text{none}}$$

$$\text{P in influent} = 15 \text{ mg/}\ell(Q_{avg})8.34$$

$$= 15(1.0)8.34$$

$$= 125 \text{ lb/day} > 41 \text{ lb/day required}$$

$$\text{P to be added} = \text{none}$$

7-65. Cost Data. Appropriate cost data and economic evaluation may be found in Chapter 8.

7-66. Bibliography.

a. Albertsson, G. G. et al., "Investigation of the Use of High Purity Oxygen Aeration in the Conventional Activated Sludge Process," Water Pollution Control Research Series Report No. 17050DNW, May 1970, Federal Water Quality Administration, Washington, D. C.

b. American Public Health Association, American Society of Civil Engineers, American Water Works Association, and Water Pollution Control Federation, "Glossary, Water and Wastewater Control Engineering," 1969.

c. American Public Works Association, "Feasibility of Computer Control of Wastewater Treatment," Report No. 17090DOY, Dec 1970, U. S. Environmental Protection Agency, Washington, D. C.

d. American Society of Civil Engineers and the Water Pollution Control Federation, "Sewage Treatment Plant Design," Manual of Practice No. 8, 1959, 1961, 1967, and 1968, Water Pollution Control Federation, Washington, D. C.

e. Bargman, R. D. and Borgerding, J., "Characterization of the Activated Sludge Process," Report No. R2-73-224, Apr 1973, U. S. Environmental Protection Agency, Washington, D. C.

f. Busch, A. W., Aerobic Biological Treatment of Wastewaters, Oligodynamics Press, 1971.

g. Center for Research, Inc., University of Kansas, "Oxygen Consumption in Continuous Biological Culture," Report No. 17050DJS, May 1971, U. S. Environmental Protection Agency, Washington, D. C.

h. City of Austin, Texas, "Design Guides for Biological Wastewater Treatment Processes," Report No. 11010ESQ, Aug 1971, U. S. Environmental Protection Agency, Washington, D. C.

i. Eckenfelder, W. W., Jr., Industrial Water Pollution Control, McGraw-Hill, New York, 1966.

j. Eckenfelder, W. W., Jr., "General Concepts of Biological Treatment," Manual of Treatment Processes, Vol 1, 1969, Environmental Science Services, Inc., Briarcliff Manor, New York.

k. Eckenfelder, W. W., Jr., Water Quality Engineering for Practicing Engineers, Barnes and Nobel, New York, 1970.

l. Eckenfelder, W. W., Jr., "Activated Sludge and Extended Aeration," Process Design in Water Quality Engineering - New Concepts and Developments, 1971, Vanderbilt University, Nashville, Tenn.

m. Eckenfelder, W. W., Jr., and Ford, D. L., Water Pollution Control, Pemberton Press, New York, 1970.

n. Eckenfelder, W. W., Jr., and O'Connor, O. J., Biological Waste Treatment, Pergamon Press, New York, 1961.

o. Gaudy, A. G., Jr., and Gaudy, E. T., "Biological Concepts for Design and Operation of the Activated Sludge Process," Report No. 17090-FQJ, Sep 1971, U. S. Environmental Protection Agency, Washington, D. C.

p. Goodman, B. L., Design Handbook of Wastewater Systems: Domestic, Industrial, Commercial, Technomic, Westport, Conn., 1971.

q. Goodman, B. L. and Englande, A. J., Jr., "A Consolidated Approach to Activated Sludge Process Design," Conference on Toward a Unified Concept of Biological Waste Treatment Design, 5-6 Oct 1972, Atlanta, Ga.

r. Lawrence, A. W. and McCarty, P. L., "Unified Basis for Biological Treatment Design and Operation," Journal, Sanitary Engineering Division, American Society of Civil Engineers, Vol 96, SA3, 1970.

s. Maier, W. J., "Biological Removal of Colloidal Matter from Wastewater," Report No. R2-73-147, Jun 1973, U. S. Environmental Protection Agency, Washington, D. C.

t. McKinney, R. E., Microbiology for Sanitary Engineers, McGraw-Hill, New York, 1962.

u. McKinney, R. E. and Pfeffer, J. T., "Oxygen-Enriched Air for Biological Waste Treatment," Water and Sewage Works, Vol 112, Oct 1965, pp 381-384.

v. Metcalf and Eddy, Inc., Wastewater Engineering; Collection, Treatment, and Disposal, McGraw-Hill, New York, 1972.

w. Okun, D. A., "System of Bio-Precipitation of Organic Matter from Sewage," Sewage Works Journal, Vol 21, No. 5, 1949, pp 763-794.

x. Smith, H. S., "Homogeneous Activated Sludge Principles and Features of the Activated Sludge Process," Water and Wastes Engineering, Vol 4, Jul 1967, pp 46-50.

y. Smith, R. and Eilers, R. G., "A Generalized Computer Model for Steady-State Performance of the Activated Sludge Process," FWQA Report No. TWRC-15, Oct 1969, Robert A. Taft Water Research Center, Cincinnati, Ohio.

z. Stensel, H. D. and Shell, G. L., "Two Methods of Biological Treatment Design," Journal, Water Pollution Control Federation, Vol 46, Feb 1974, pp 271-283.

aa. Stewart, M. J., "Activated Sludge System Variations - Specific Applications," The 15th Ontario Industrial Waste Conference, 9-12 Jun 1968, Niagara Falls, Ontario.

bb. Toerber, E. D., "Full Scale Parallel Activated Sludge Process Evaluation," Report No. R2-72-065, Nov 1972, U. S. Environmental Protection Agency, Washington, D. C.

cc. Union Carbide Corporation, "Continued Evaluation of Oxygen Use in Conventional Activated Sludge Processing," Report No. 17050DNW, Feb 1972, U. S. Environmental Protection Agency, Washington, D. C.

dd. Union Carbide Corporation, "Unox System Wastewater Treatment," Report of Pilot Study at Hooker's Point Treatment Plant, Tampa, Fla.

ee. Weston, R. F., "Design of Sludge Reaeration Activated Sludge Systems," Journal, Water Pollution Control Federation, Vol 33, No. 7, 1961, pp 748-757.

 (next page is 7-205)

Section X. AERATED AEROBIC LAGOONS

7-67. Background.

The contents of an aerated aerobic lagoon must be completely mixed so that the incoming solids and the biological solids produced in the lagoon do not settle. Effluent quality is a function of the detention time and will normally have a BOD ranging from one-third to one-half of the influent value. This BOD is due to the endogenous respiration of the biological solids escaping in the effluent. Before the effluent is discharged, the solids may be removed by settling. Where sedimentation is used, it may be advantageous to provide for recycle. A schematic of aerated lagoons is shown in Figure 7-8.

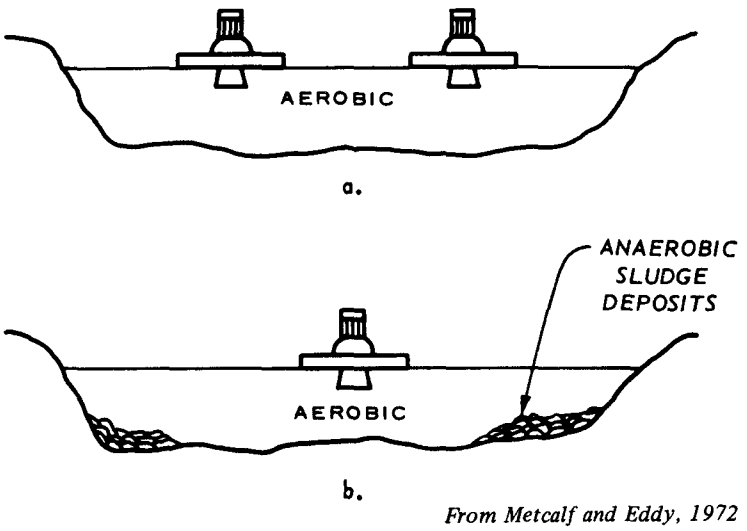

Figure 7-8. Schematic of (a) an aerated lagoon and (b) an aerobic-anaerobic lagoon.

7-68. Input Data.

a. Wastewater Flow.

(1) Average daily, mgd.

(2) Peak (hourly), mgd.

b. Wastewater Characteristics.

(1) BOD influent, mg/ℓ.

(2) Influent SS, mg/ℓ.

(3) Influent VSS, mg/ℓ.

(4) Nitrogen, mg/ℓ.

(5) Phosphorus, mg/ℓ.

(6) Nonbiodegradable fraction of VSS.

c. Desired degree of treatment, percent.

d. Temperature, °F or °C (summer and winter).

7-69. Design Parameters.

a. McKinney's Approach.

(1) Reaction rates: K_m, 15/hr at 20°C; K_s, 10.4/hr at 20°C; and K_e, 0.02/hr at 20°C.

(2) Hydraulic detention time, 2-4 days.

(3) Solids retention time, 3-7 days.

(4) MLSS under aeration, 200-500 mg/ℓ.

(5) Temperature coefficient, 1.035.

(6) Depth, 6-12 ft.

b. Eckenfelder's Approach.

(1) Reaction rate constant, 0.0007-0.002 l/mg-hr.

(2) MLSS, 200-500 mg/ℓ.

(3) MLVSS, 140-350 mg/ℓ.

(4) Fraction of BOD synthesized, 0.73.

(5) Fraction of BOD oxidized for energy, 0.52.

(6) Endogenous respiration rate per day (b = 0.075/day, b' = 0.15/day).

(7) Temperature coefficient, 1.035.

(8) Hydraulic detention time, 2-4 days.

(9) Depth, 6-12 ft.

7-70. Design Procedure. Most designers choose to treat this type of lagoon as a variation of an activated sludge process. Two well-known systems for design are as follows.

a. McKinney's Approach.

(1) Determine size of lagoon. Select the metabolism constant, K_m, and the detention time, t.

$$V = Qt$$

where

V = volume, million gal

Q = flow, mgd

t = detention time, days

(2) Adjust the metabolism constant for temperature. Select temperature correction coefficient.

$$K_{mT} = K_{m(20)}\theta^{(T-20)}$$

where

K_{mT} = metabolism constant

$K_{m(20)}$ = rate constant at 20°C

θ = temperature correction coefficient

T = temperature, °C

(3) Calculate the effluent BOD_5 for both winter and summer.

$$F_e = \frac{F_i}{1 + K_m t}$$

where

F_i = influent BOD_5, mg/ℓ

F_e = effluent BOD_5, mg/ℓ

(4) Calculate the total mass; select the synthesis factor, K_s, and the endogenous respiration factor, K_e.

$$M_T = M_a + M_e + M_i + M_{ii}$$

$$M_a = \frac{K_s K_e}{K_e + 1/24t_s}$$

$$M_e = 0.2K_e M_a t_s(24)$$

$$M_i = SS_i \times \frac{24t_s}{t}$$

$$M_{ii} = SS_{ii} \times \frac{24t_s}{t} + 0.1(M_a + M_e)$$

where

M_T = total mass, mg/ℓ

M_a = living active mass, mg/ℓ

M_e = endogenous mass, mg/ℓ

M_i = inert nonbiodegradable organic mass, mg/ℓ

M_{ii} = inert inorganic suspended solids, mg/ℓ

K_s = synthesis factor, hr (10.4/hr at 20°C)

K_e = endogenous respiration factor, hr (0.02/hr at 20°C)

t_s = solids retention time, days

SS_i = inert organic SS in influent, mg/ℓ

= VSS × nonbiodegradable (≈0.4VSS for municipal waste)

SS_{ii} = inert inorganic SS fraction in the influent

(5) Substitute F_e for winter and summer conditions into equation below and check against allowable winter and summer BOD_5 effluent. In this equation $M_a(eff) = M_a$ in lagoon.

$$\left(BOD_s\right)_{eff} = F_e + 0.71M_a$$

(6) Determine oxygen uptake rate.

$$\frac{dO}{dt} = \frac{1.5(F_i - F_e)}{24t} = \frac{1.42(M_a + M_e)}{24t}$$

and calculate oxygen for peak load

$$O_2 = \frac{0.5(F_i - F_e)}{t} \times \frac{Q_p}{Q_{avg}} + 1.42K_eM_a(0.76)$$

where

dO/dt = oxygen uptake rate, mg/ℓ/hr

F_i = influent BOD_5, mg/ℓ

F_e = effluent BOD_5, mg/ℓ

t = detention time, days

M_a = total mass, mg/ℓ

M_e = endogenous mass, mg/ℓ

Q_p = peak flow, mgd

Q_{avg} = average flow, mgd

K_e = endogenous respiration rate/hr

(7) Design mechanical aeration system and check horsepower supply to keep all solids in suspension; horsepower required to keep solids in suspension $\geq$0.06 hp/1000 gal.

(a) Assume the following design parameters.

1 Standard transfer efficiency, lb/hp-hr (0 dissolved oxygen, 20°C, and tap water).

2 O_2 transfer in waste/O_2 transfer in water ≈0.9.

3 O_2 saturation in waste/O_2 saturation in water ≈0.9.

4 Correction factor for pressure ≈1.0.

(b) Select summer operating temperature (25-30°C) and determine (from standard tables) O_2 saturation.

(c) Adjust standard transfer efficiency to operating conditions.

$$OTE = STE \frac{\left[(C_s)_T (\beta)(p) - C_L\right]}{9.17} \alpha(1.02)^{T-20}$$

where

OTE = operating transfer efficiency, lb O_2/hp-hr

STE = standard transfer efficiency, lb O_2/hp-hr

$(C_s)_T$ = O_2 saturation at the selected summer temperature T, °C, in mg/ℓ

β = O_2 saturation in waste/O_2 saturation in water ≈0.9

p = correction factor for pressure ≈ 1.0

C_L = minimum dissolved oxygen to be maintained in the basin $\geqslant 2.0$ mg/ℓ

α = O_2 transfer in waste/O_2 transfer in water ≈ 0.9

T = temperature, °C

(d) Calculate horsepower requirement.

$$hp = \frac{O_2}{\left(OTE \frac{lb\ O_2}{hp\text{-}hr}\right)(24)(V)} \times 1000$$

where

hp = horsepower required/1000 gal

O_2 = oxygen required, lb/day

OTE = operating transfer efficiency, lb O_2/hp-hr

V = volume of basin, gal

(8) Determine nutrient requirements.

BOD:Nitrogen:Phosphorus = 100:5:1

b. Eckenfelder's Approach.

(1) Determine size of lagoon.

(a) Select the BOD removal rate constant, the endogenous respiration rate, the fraction of BOD synthesized, and temperature (summer, winter) S_e .

(b) Adjust the BOD removal rate constant for winter and summer.

$$K_T = K_{20}\theta^{(T-20)}$$

where

K_T = BOD removal rate constant, 1/mg/hr

K_{20} = rate constant at 20°C

θ = temperature correction coefficient

T = temperature, °C

(c) Solve following equation for t to satisfy winter conditions and desired treatment.

$$t = \frac{1}{24aKS_e - b}$$

where

t = detention, days

a = fraction of BOD synthesized

K = BOD removal rate constant, ℓ/mg/hr

S_e = effluent soluble BOD_5, mg/ℓ

b = endogenous respiration rate, 1/day

(d) Solve equation above for t to satisfy summer conditions and desired treatment.

(e) Select larger t calculated above.

(f) Calculate volume of pond.

$$V = Qt$$

where

V = volume of pond, million gal

Q = flow, mgd

t = detention time, days

(2) Determine MLVSS; substitute value of t (determined above) into

$$X_V = \frac{X_o + aS_r}{1 + bt}$$

where

X_V = MLVSS, mg/ℓ

X_o = suspended solids in influent, mg/ℓ

a = fraction of BOD synthesized

S_r = BOD removed, mg/ℓ

b = endogenous respiration rate, 1/mg/hr

t = detention time, days

(3) Calculate oxygen requirements.

$$O_2 = (a')(S_r)(Q)(8.34) + (b')(X_V)(V)(8.34)$$

where

O_2 = oxygen required, lb/day

a' = fraction of BOD oxidized for energy

S_r = BOD removed, mg/ℓ

Q = flow, mgd

b' = endogenous respiration rate, 1/hr

X_V = MLVSS, mg/ℓ

V = volume of the pond, million gal

(4) Design mechanical aeration system and check horsepower supply to keep all solids in suspension: horsepower required to keep all solids in suspension $\geq$0.06 hp/1000 gal.

(a) Assume the following design parameters.

1 Standard transfer efficiency, lb/hp-hr (0 dissolved oxygen, 20°C, and tap water).

2 O_2 transfer in waste/O_2 transfer in water $\approx$0.9.

3 O_2 saturation in waste/O_2 saturation in water ≈ 0.9.

4 Correction factor for pressure ≈ 1.0.

(b) Select summer operating temperature (25-30°C) and determine (from standard tables) O_2 saturation.

(c) Adjust standard transfer efficiency to operating conditions.

$$OTE = STE \frac{\left[(C_s)_T (\beta)(p) - C_L\right]}{9.17} \alpha(1.02)^{T-20}$$

where

OTE = operating transfer efficiency, lb O_2/hp-hr

STE = standard transfer efficiency, lb O_2/hp-hr

$(C_s)_T$ = 0.2 saturation at selected summer temperature T, °C, mg/ℓ

β = O_2 saturation in waste/O_2 saturation in water ≈ 0.9

p = correction factor for pressure ≈ 1.0

C_L = minimum dissolved oxygen to be maintained in the basin ≥ 2.0 mg/ℓ

α = O_2 transfer in waste/O_2 transfer in water ≈ 0.9

T = temperature, °C

(d) Calculate horsepower requirement.

$$hp = \frac{O_2}{OTE\left(\frac{lb\ O_2}{hp\text{-}hr}\right)(24)(V)} \times 1000$$

where

hp = horsepower required/1000 gal

O_2 = oxygen required, lb/day

OTE = operating transfer efficiency, lb O_2/hp-hr

V = volume of the pond, gal

(e) Calculate nutrient requirements.

BOD:Nitrogen:Phosphorus = 100:5:1

(f) Determine effluent BOD.

$$BOD_{eff} = S_e + 0.3X_V$$

where

BOD_{eff} = effluent BOD, mg/ℓ

S_e = effluent soluble BOD_5, mg/ℓ

X_V = MLVSS, mg/ℓ

7-71. Output Data.

a. Lagoon.

(1) Summer temperature, °C.

(2) Winter temperature, °C.

(3) Effluent BOD, mg/ℓ.

(4) Fraction BOD synthesized.

(5) Fraction BOD oxidized.

(6) Endogenous rate (b, b').

(7) Temperature coefficient.

(8) Detention time, days.

(9) MLVSS, mg/ℓ.

(10) Volume, million gal.

(11) Oxygen requirement, lb/day.

(12) Nitrogen requirement, lb/day.

(13) Phosphorus requirement, lb/day.

(14) Total effluent BOD, mg/ℓ.

b. Mechanical Aeration System.

(1) Standard transfer efficiency, lb O_2/hp-hr.

(2) Operating transfer efficiency, lb O_2/hp-hr.

(3) Horsepower required/1000 gal.

7-72. Example Calculations (Eckenfelder's Approach).

a. Determine size of lagoon.

(1) Select design parameters.

(a) k = 0.001

(b) a = 0.73

(c) b = 0.075/day

(d) T = 25°C summer, 15°C winter

(2) Adjust K for winter and summer conditions.

$$K_T = K_{20}\theta^{T-20}$$

where

K_T = removal rate constant at T, ℓ/mg/hr

K_{20} = removal rate constant at 20°C, 0.001 ℓ/mg/hr

θ = temperature correction coefficient, 1.035

T = temperature, 15°C winter, 25°C summer.

$$K_{15} = 0.001(1.035)^{15-20}$$

$$\underline{K_{15} = 0.00084 \ \ell/mg/hr \text{ winter}}$$

$$K_{25} = 0.001(1.035)^{25-20}$$

$$\underline{K_{25} = 0.00119 \ \ell/mg/hr \text{ summer}}$$

(3) Under winter conditions determine detention time for desired treatment.

$$t = \frac{1}{24aKS_e - b}$$

where

t = detention time, days

a = 0.73

$K = K_{15} = 0.00084$

S_e = effluent BOD_5 = 15 mg/ℓ

b = 0.075/day

$$t = \frac{1}{24(0.73)0.00084(15) - 0.075}$$

$$\underline{t = 6.9 \text{ days, say 7 days}}$$

(4) Solve for summer conditions.

$$t = \frac{1}{24(0.73)(0.00119)15 - 0.075}$$

$$\underline{t = 4.2 \text{ days, say 4 days}}$$

(5) Select larger t . $\underline{t = 7.0 \text{ days}}$

(6) Calculate volume of the pond.

$$V = Qt$$

where

V = volume, million gal

Q = flow, 1.0 mgd

t = detention time, 7 days

$$V = 1.0(7)$$

$$\underline{V = 7 \text{ million gal}}$$

b. Determine MLVSS.

$$X_V = \frac{X_o + aS_r}{1 + bt}$$

where

X_V = MLVSS, mg/ℓ

X_o = influent suspended solids, 200 mg/ℓ

a = 0.73

$S_r = S_o - S_e = 200 - 15 = 185$ mg/ℓ

b = 0.075/day

t = 7 days

$$X_V = \frac{200 + 0.73(185)}{1 + 0.075(7)}$$

$$\underline{X_V = 220 \text{ mg/ℓ}}$$

c. Calculate oxygen requirements.

$$O_2 = (a')S_r(Q)8.34 + (b')X_V(V)8.34$$

where

O_2 = oxygen required, lb/day

a' = 0.52

S_r = 185 mg/ℓ

Q = average flow, 1.0 mgd

b' = 0.15/day

X_V = MLVSS, 220 mg/ℓ

V = volume of basin, 7 million gal

$$O_2 = 0.52(185)1.0(8.34) + 0.15(220)7(8.34)$$

$$\underline{O_2 = 2729 \text{ lb/day}}$$

d. Design mechanical aeration system and check horsepower supply to keep all solids in suspension: horsepower $\geq$0.06 hp/1000 gal.

(1) Assume the following parameters.

(a) STE = 5 percent

(b) $\alpha = 0.9$

(c) $\beta = 0.9$

(d) $p = 1.0$

(2) Select summer operating temperature and determine O_2 saturation. Temperature = 25°C. $(C_s)_{25}$ = 8.2 mg/ℓ.

(3) Adjust the standard transfer efficiency to operating conditions.

$$OTE = STE \frac{\left[(C_s)_T \beta p - C_L\right]}{9.17} \alpha(1.02)^{T-20}$$

where

OTE = operating transfer efficiency, percent

STE = standard transfer efficiency, 5 percent

$(C_s)_T$ = 8.2 mg/ℓ

β = 0.9

p = 1.0

C_L = minimum dissolved oxygen, 1.0 mg/ℓ

9.17 = O_2 saturation at 20°C

α = 0.9

T = 25°C

$$OTE = 5 \frac{[8.2(0.9)1.0 - 1.0]}{9.17} 0.9(1.02)^{25-20}$$

$$\underline{OTE = 3.5 \text{ percent}}$$

(4) Calculate horsepower requirement.

$$hp = \frac{O_2}{OTE(24)V} \frac{1000}{10^6}$$

where

hp = horsepower required per 1000 gal

O_2 = oxygen required, 2729 lb/day

OTE = operating transfer efficiency, 3.5 percent

V = volume of basin, 7 million gal

$$hp = \frac{2729(1000)}{3.5(24)7(10^6)}$$

hp = 0.005 hp/1000 gal < 0.06 required to keep solids in suspension. Therefore use hp = 0.06 hp/1000 gal.

$$\text{Total hp} = 0.06\left(\frac{7{,}000{,}000}{1{,}000}\right) = \underline{420\ \text{hp}}$$

(5) Calculate nutrient requirements.

BOD:N:P = 100:5:1

BOD = 200 mg/ℓ

N required = 10 mg/ℓ

P required = 2 mg/ℓ

(6) Determine effluent BOD.

$$BOD_{eff} = S_e + 0.3X_V$$

where

BOD_{eff} = effluent BOD, mg/ℓ

S_e = effluent soluble BOD, 15 mg/ℓ

X_V = MLVSS, 220 mg/ℓ

$$BOD_{eff} = 15 + 0.3(220)$$

$$\underline{BOD_{eff} = 81/\text{mg}/\ell}$$

7-73. Cost Data. Appropriate cost data and economic evaluation may be found in Chapter 8.

7-74. Bibliography.

a. Barnhart, E. L. and Eckenfelder, W. W., Jr., "Theoretical Aspects of Aerated Lagoon Design," Symposium on Wastewater Treatment for Small Municipalities, 1965, Ecole Polytechnique, Montreal, Quebec, Canada.

b. Bishop, N. E., Malina, J. F., Jr., and Eckenfelder, W. W., Jr., "Studies on Mixing And Heat Exchange in Aerated Lagoons," Technical Report EHE-70-21, CRWR-70, 1970, Center for Research in Water Resources, University of Texas at Austin.

c. City of Austin, Texas, "Design Guides for Biological Wastewater Treatment Processes," Report No. 11010ESQ, Aug 1971, U. S. Environmental Protection Agency, Washington, D. C.

d. Eckenfelder, W. W., Jr., Industrial Water Pollution Control McGraw-Hill, New York, 1966.

e. Eckenfelder, W. W., Jr., "Aerated Lagoons," Manual of Treatment Processes. Vol I, 1969, Environmental Science Services, Inc., Briarcliff Manor, New York.

f. Eckenfelder, W. W., Jr., "General Concepts of Biological Treatment," Manual of Treatment Processes, Vol 1, 1969, Environmental Science Services, Inc., Briarcliff Manor, New York.

g. Eckenfelder, W. W., Jr., Water Quality Engineering for Practicing Engineers, Barnes and Nobel, New York, 1970.

h. Eckenfelder, W. W., Jr., and Ford, D. L., Water Pollution Control, Pemberton Press, New York, 1970.

i. McKinney, R. E., Microbiology for Sanitary Engineers, McGraw-Hill, New York, 1962.

j. McKinney, R. E., "Design and Operation of Complete Mixing Activated Sludge Systems," Environmental Pollution Control Services Reports, Vol 1, No. 3, Jul 1970, pp 1-34.

k. McKinney, R. E. and Benjes, H. H., "Design and Operation of Aerated Lagoons," Paper No. 3P2-1, Jul 1965, National Symposium on Sanitary Engineering Research, Development and Design.

l. Metcalf and Eddy, Inc., Wastewater Engineering; Collection, Treatment, and Disposal, McGraw-Hill, New York, 1972.

m. Sawyer, C. N., "New Concepts in Aerated Lagoon Design and Operation," Advances in Water Quality Improvements - Physical and Chemical Processes, E. F. Gloyna and W. W. Eckenfelder, Jr., ed., University of Texas Press, Austin, 1970.

Section XI. AERATED FACULTATIVE LAGOONS

7-75. Background.

a. The contents of this type of lagoon are not completely mixed. Thus, portions of the incoming solids and the biologically produced solids settle out and undergo anaerobic decomposition. As a result, the facultative lagoon produces a higher quality effluent than does the aerobic one.

b. This type of lagoon may be useful in warm and arid climates, particularly in those areas requiring total retention, i.e. a facultative-evaporative lagoon.

7-76. Input Data.

a. Wastewater flow.

(1) Average daily, mgd.

(2) Peak (hourly), mgd.

b. Wastewater characteristics.

(1) BOD influent, mg/ℓ.

(2) Suspended solids, mg/ℓ.

(3) Volatile suspended solids (VSS), mg/ℓ

(4) Nitrogen, mg/ℓ.

(5) Phosphorus, mg/ℓ.

(6) Nonbiodegradable fraction of VSS.

c. Desired degree of treatment.

d. Temperature, °F or °C (summer and winter).

7-77. Design Parameters.

a. Reaction rate constant/day (0.5-1.0, avg 0.75).

b. Temperature correction coefficient ≈1.075.

c. Fraction BOD removed for respiration (0.9-1.4).

d. BOD feedback from bottom or sediment (summer = 20 percent; winter = 5 percent).

e. MLVSS, mg/ℓ (50-150) average 100.

7-78. Design Procedure.

a. Select the rate constant, K . Adjust K for summer and winter temperatures.

$$K_T = K_{20}\theta^{(T-20)}$$

where

K_T = rate constant for desired temperature, °C

K_{20} = rate constant at 20°C

θ = temperature correction coefficient

T = temperature, °C

b. For summer and winter efficiencies, calculate detention times to meet winter efficiency.

$$\frac{S_e}{S_o} = \frac{1}{1 + Kt} (1.05)$$

where

S_e = effluent soluble BOD_5, mg/ℓ

S_o = influent BOD_5, mg/ℓ

K = reaction rate constant

t = detention time, days

and summer efficiency

$$\frac{S_e}{S_o} = \frac{1}{1 + Kt} (1.2)$$

Select the larger of the detention times.

c. Calculate volume.

$$V = Q_{avg}t$$

where

V = volume, million gal

Q_{avg} = average daily flow, mgd

t = detention time, days

d. Determine oxygen requirements. Assume a' .

$$O_2 = a'S_rQ(8.34)(1.2)$$

where

O_2 = oxygen required, lb/day

a' = fraction of BOD oxidized for energy

S_r = BOD removed, mg/ℓ

Q = flow, mgd

e. Determine amount of effluent solids (50-150) mg/ℓ.

f. Design mechanical aeration system and check horsepower supply to allow solids to settle: horsepower required to allow solids to settle (0.01-0.02 hp/1000 gal).

(1) Assume the following design parameters.

(a) Standard transfer efficiency, lb/hp-hr (0 dissolved oxygen, 20°C, and tap water).

(b) O_2 transfer in waste/O_2 transfer in water $\approx$0.9.

(c) O_2 saturation in waste/O_2 saturation in water $\approx$0.9.

(d) Correction factor for pressure ≈ 1.0.

(2) Select summer operating temperature (25-30°C) and determine (from standard tables) O_2 saturation.

(3) Adjust standard transfer efficiency to operating conditions.

$$OTE = STE \frac{\left[(C_s)_T (\beta)(p) - C_L\right]}{9.17} (\alpha)(1.02)^{T-20}$$

where

OTE = operating transfer efficiency, lb O_2/hp-hr

STE = standard transfer efficiency, lb O_2/hp-hr

$(C_s)_T$ = O_2 saturation at selected summer temperature, mg/ℓ

β = O_2 saturation in waste/O_2 saturation in water ≈ 0.9

p = correction factor for pressure ≈ 1.0

C_L = minimum dissolved oxygen to be maintained in the basin $\geqslant 2.0$ mg/ℓ

α = O_2 transfer in waste/O_2 transfer in water ≈ 0.9

T = temperature, °C

(4) Calculate horsepower requirement.

$$hp = \frac{O_2}{\left(OTE \frac{lb\ O_2}{hp\text{-}hr}\right)(24)(V)} \times 1000$$

where

hp = horsepower required/1000 gal

O_2 = oxygen required, lb/day

OTE = operating transfer efficiency, lb O_2/hp-hr

V = volume of the basin, gal

g. Calculate BOD in effluent.

$$(BOD)_{eff} = S_e + 0.3(VSS)_{eff}$$

where

$(BOD)_{eff}$ = BOD in effluent, mg/ℓ

S_e = effluent soluble BOD_5, mg/ℓ

$(VSS)_{eff}$ = effluent volatile suspended solids, mg/ℓ

h. Determine nutrient requirements.

BOD:Nitrogen:Phosphorus = 100:5:1

7-79. Output Data.

a. Lagoon.

(1) Summer temperature, °C.

(2) Winter temperature, °C.

(3) Effluent BOD, mg/ℓ.

(4) Reaction rate constant, 1/day.

(5) Temperature correction coefficient.

(6) Detention time, days.

(7) MLVSS, mg/ℓ

(8) Volume, million gal.

(9) Oxygen requirement, lb/day.

(10) Nitrogen requirement, lb/day.

(11) Phosphorus requirement, lb/day.

(12) Total effluent BOD, lb/day.

b. Mechanical Aeration System.

(1) Standard transfer efficiency, lb O_2/hp-hr.

(2) Operating transfer efficiency, lb O_2/hp-hr.

(3) Horsepower required, hp.

7-80. Example Calculations.

a. Select reaction rate constant K and adjust for temperature (25°C).

$$K_{25} = K_{20}\theta^{(T-20)}$$

where

K_{25} = reaction rate at 25°C, rate/day

K_{20} = reaction rate at 20°C, 0.75/day

θ = temperature correction coefficient, 1.075

T = temperature, 25°C

$$K_{20} = 0.75(1.075)^{25-20}$$

$$\underline{K_{20} = 1.077/\text{day}}$$

b. Calculate detention times for winter and summer efficiencies.

For winter

$$\frac{S_e}{S_o} = \frac{1}{1 + Kt}(1.05)$$

where

S_e = effluent soluble BOD_5, 15 mg/ℓ

S_o = influent BOD_5, 200 mg/ℓ

K = reaction rate constant, 1.077/day

t = detention time, days

1.05 = BOD feedback from sediment in winter

$$\frac{15}{200} = \frac{1}{1 + 1.077(t)} (1.05)$$

$$\underline{t = 12 \text{ days}}$$

For summer

$$\frac{S_e}{S_o} = \frac{1}{1 + K(t)} (1.2)$$

where

1.2 = BOD feedback from sediment in summer

$$\frac{15}{200} = \frac{1}{1 + 1.077(t)} (1.2)$$

$$\underline{t = 14.9 \text{ avg } 15 \text{ days}}$$

Select larger detention time. <u>t = 15 days</u>

c. Calculate volume of lagoon.

$$V = Q_{avg} t$$

where

V = volume of lagoon, million gal

Q_{avg} = average daily flow, 1.0 mgd

t = detention time, 15 days

$$V = 1.0(15)$$

$$\underline{V = 15 \text{ million gal}}$$

d. Determine oxygen requirements.

$$O_2 = a'S_rQ(8.34)1.2$$

where

O_2 = oxygen required, lb/day

$a' = 1.1$

$S_r = S_o - S_e = 185$ mg/ℓ

Q = flow, 1.0 mgd

1.2 = lb O_2 required per lb BOD removed

$$O_2 = 1.1(185)1.0(8.34)1.2$$

$$\underline{O_2 = 2037 \text{ lb/day}}$$

e. Determine effluent solids.

Assume $(SS)_{eff} = 100$ mg/ℓ.

f. Design mechanical aeration system.

(1) Assume the following parameters.

(a) STE = 5.0 percent

(b) $\alpha = 0.9$

(c) $\beta = 0.9$

(d) $p = 1.0$

(2) Select summer temperature (25°C) and determine O_2 saturation. $(C_s)_{25} = 8.2$ mg/ℓ .

(3) Adjust STE to operating conditions.

$$OTE = STE \frac{\left[(C_s)_T (\beta)p - C_L\right]}{9.17} \alpha 1.02^{T-20}$$

where

OTE = operating transfer efficiency, percent

STE = standard transfer efficiency, 5.0 percent

$(C_s)_T$ = 8.2 mg/ℓ

β = 0.9

p = 1.0

C_L = minimum dissolved oxygen, 0 mg/ℓ

α = 0.9

9.17 = O_2 saturation at 20°C

T = 25°C

$$OTE = 5.0 \frac{[8.2(0.9)1.0 - 0]}{9.17} 0.9(1.02)^{25-20}$$

$$\underline{OTE = 4.0\%}$$

(4) Calculate horsepower required

$$hp \frac{O_2(1000)}{OTE\ 24(V)(10^6)}$$

where

hp = horsepower required, hp/1000 gal

O_2 = oxygen required, 2037 lb/day

OTE = operating transfer efficiency, 4.0 percent

V = volume of basin, 15 million gal

$$hp = \frac{2037(1000)}{4.0(24)15(10^6)}$$

$$\underline{hp = 0.0014\ hp/1000\ gal}$$

g. Calculate BOD in effluent.

$$(BOD)_{eff} = S_e + 0.3(VSS)_{eff}$$

where

$(BOD)_{eff}$ = BOD in effluent, mg/ℓ

S_e = soluble BOD in effluent, 15 mg/ℓ

$(VSS)_{eff}$ = volatile suspended solids in effluent

$= 0.8(SS)_{eff} = 0.8(100) = 80$ mg/ℓ

$$(BOD)_{eff} = 15 + 0.3(80)$$

$$\underline{(BOD)_{eff} = 39\ mg/\ell}$$

h. Determine nutrient requirements.

BOD:N:P = 100:5:1

BOD = 200 mg/ℓ

<u>N = 10 mg/ℓ required</u>

<u>P = 2 mg/ℓ required</u>

7-81. <u>Cost Data</u>. Appropriate cost data and economic evaluation may be found in Chapter 8.

7-82. Bibliography.

a. Barnhart, E. L. and Eckenfelder, W. W., Jr., "Theoretical Aspects of Aerated Lagoon Design," Symposium on Wastewater Treatment for Small Municipalities, 1965, Ecole Polytechnique, Montreal, Quebec, Canada.

b. Bishop, N. E., Malina, J. F., Jr., and Eckenfelder, W. W., Jr., "Studies on Mixing and Heat Exchange in Aerated Lagoons," Technical Report EHE-70-21, CRWR-70, 1970, Center for Research in Water Resources, University of Texas at Austin.

c. City of Austin, Texas, "Design Guides for Biological Wastewater Treatment Processes," Report No. 11010ESQ, Aug 1971, U. S. Environmental Protection Agency, Washington, D. C.

d. Eckenfelder, W. W., Jr., Industrial Water Pollution Control, McGraw-Hill, New York, 1966.

e. Eckenfelder, W. W., Jr., "Aerated Lagoons," Manual of Treatment Processes, Vol I, 1969, Environmental Science Services, Inc., Briarcliff Manor, New York.

f. Eckenfelder, W. W., Jr., "General Concepts of Biological Treatment," Manual of Treatment Processes, Vol 1, 1969, Environmental Science Services, Inc., Briarcliff Manor, New York.

g. Eckenfelder, W. W., Jr., and Ford, D. L., Water Pollution Control, Pemberton Press, New York, 1970.

h. Goodman, B. L., Design Handbook of Wastewater Systems: Domestic, Industrial, Commercial, Technomic, Westport, Conn., 1971.

i. McKinney, R. E., "Design and Operation of Complete Mixing Activated Sludge Systems," Environmental Pollution Control Services Reports, Vol 1, No. 3, Jul 1970, pp 1-34.

j. McKinney, R. E. and Benjes, H. H., "Design and Operation of Aerated Lagoons," Paper No. 3P2-1, Jul 1965, National Symposium on Sanitary Engineering Research, Development and Design.

k. Metcalf and Eddy, Inc., Wastewater Engineering; Collection, Treatment, and Disposal, McGraw-Hill, New York, 1972.

1. Sawyer, C. N., "New Concepts in Aerated Lagoon Design and Operation," Advances in Water Quality Improvements - Physical and Chemical Processes, E. F. Gloyna and W. W. Eckenfelder, Jr., ed., University of Texas Press, Austin, 1970.

Section XII. OXIDATION DITCH

7-83. Background. The oxidation ditch, developed in the Netherlands, is a variation of the extended aeration process that has been used in small towns, isolated communities, and institutions in Europe and the United States. The typical oxidation ditch (Fig. 7-9) is equipped with aeration rotors or brushes that provide aeration and circulation. The sewage moves through the ditch at 1 to 2 fps. The ditch may be designed for continuous or intermittent operation. Because of this feature, this process may be adaptable to the fluctuations in flows and loadings associated with recreation area wastewater production.

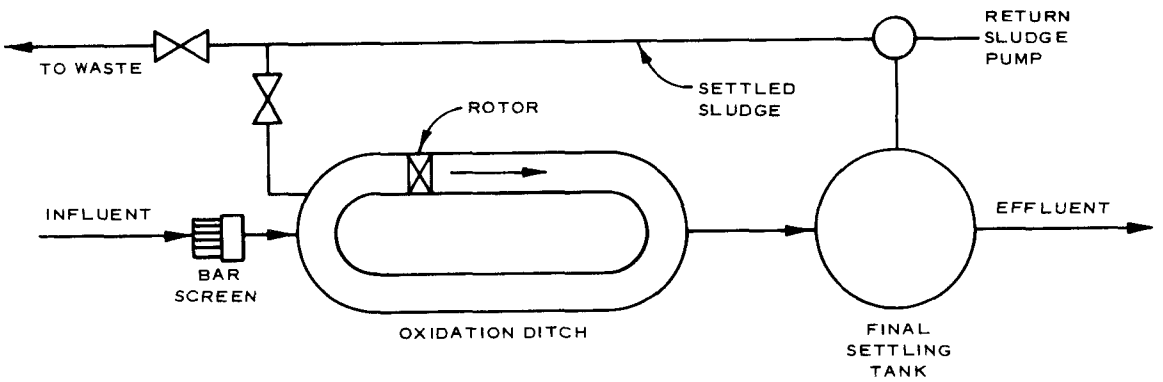

Figure 7-9. Typical oxidation ditch.

7-84. Input Data.

a. Wastewater Flow (Average and Peak). In case of high variability, a statistical distribution should be provided.

b. Wastewater Strength.

(1) BOD_5 (soluble and total), mg/ℓ.

(2) COD and/or TOC (maximum and minimum), mg/ℓ.

(3) Suspended solids, mg/ℓ.

(4) Volatile suspended solids (VSS), mg/ℓ.

(5) Nonbiodegradable fraction of VSS, mg/ℓ.

c. Other Characterization.

(1) pH.

(2) Acidity and/or alkalinity, mg/ℓ.

(3) Nitrogen,[1] mg/ℓ.

(4) Phosphorus (total and soluble), mg/ℓ.

(5) Oils and greases, mg/ℓ.

(6) Heavy metals, mg/ℓ.

(7) Toxic or special characteristics (e.g., phenols), mg/ℓ.

(8) Temperature, °F or °C.

d. Effluent Quality Requirements.

(1) BOD_5, mg/ℓ.

(2) SS, mg/ℓ.

(3) TKN, mg/ℓ.

(4) P, mg/ℓ.

7-85. Design Parameters.

a. Reaction rate constants and coefficients.

Eckenfelder

k	0.0007-0.002 ℓ/mg/hr
a	0.73
a'	0.52
b	0.075/day

[1] The form of nitrogen should be specified as to its biological availability (e.g., NH_3 or Kjeldahl).

b'	0.15/day
a_0	0.77a = 0.56
f	0.40
f'	0.53

b. F/M = 0.03-0.1.

c. Volumetric loading = 10-40.

d. t = 18-36 hr.

e. t_s = 20-30 days.

f. MLSS = 4000-8000 mg/ℓ; mean, 6000 mg/ℓ.

g. MLVSS = 2800-5600 mg/ℓ.

h. Q_r/Q = 0.5-1.0.

i. lb O_2/lb $BOD_r \geq 1.5$.

j. lb solids/lb $BOD_r \leq 0.2$.

k. θ = 1.0-1.03.

l. Efficiency = >90 percent.

7-86. Design Procedure.

a. Assume the following design parameters when known.

(1) Fraction of BOD synthesized (a).

(2) Fraction of BOD oxidized for energy (a').

(3) Endogenous respiration rate (b and b').

(4) Fraction of BOD_5 synthesized to degradable solids (a_o).

(5) Nonbiodegradable fraction of VSS in influent (f).

(6) Mixed liquor suspended solids (MLSS).

(7) Volatile solids in mixed liquor suspended solids (MLVSS).

(8) Temperature correction coefficient (θ).

(9) Degradable fraction of the MLVSS (f').

(10) Food-to-microorganism ratio (F/M).

(11) Effluent soluble BOD_5 (S_e).

b. Adjust the BOD removal rate constant for temperature.

$$K_T = K_{20}\theta^{(T-20)}$$

where

K_T = rate constant for desired temperature

K_{20} = rate constant at 20°C

θ = temperature correction coefficient

T = temperature, °C

c. Determine the size of the aeration tank.

$$V = \frac{a_o(S_o - S_e)Q_{avg}}{(X_V)(f')(b)}$$

where

V = aeration tank volume, million gal

a_o = fraction of BOD_5 synthesized to degradable solids

S_o = influent BOD_5, mg/ℓ

S_e = effluent soluble BOD_5, mg/ℓ

Q_{avg} = waste flow, mgd

X_V = MLVSS, mg/ℓ

f' = degradable fraction of the MLVSS

b = endogenous respiration rate, 1/day

d. Calculate the detention time.

$$t = \frac{V}{Q} 24$$

where

t = detention time, hr

V = volume, million gal

Q = flow, mgd

e. Assume the organic loading and calculate detention time.

$$t = \frac{24S_o}{X_V \frac{F}{M}}$$

where

t = detention time, days

S_o = influent BOD_5, mg/ℓ

X_V = volatile solids in raw sludge, mg/ℓ

F/M = organic loading (food-to-microorganism ratio)

and select the larger of two detention times from d. or e.

f. Determine the oxygen requirements allowing 60 percent for nitrification during summer.

$$O_2 = a'S_rQ_{avg}(8.34) + b'X_VV(8.34) + 0.6(4.57)(TKN)(Q_{avg})8.34$$

where

O_2 = oxygen required, lb/day

a' = fraction of BOD oxidized for energy

S_r = BOD_5 removed, mg/ℓ

Q_{avg} = average waste flow, mgd

b' = endogenous respiration rate, 1/day

X_V = MLVSS, mg/ℓ

V = aeration tank volume, million gal

TKN = total Kjeldahl nitrogen, mg/ℓ

and calculate oxygen requirement ($\geq$1.5).

$$\frac{\text{lb } O_2}{\text{lb BOD}_r} = \frac{O_2}{(Q)(S_r)(8.34)}$$

where

O_2 = oxygen required, lb/day

Q = waste flow, mgd

S_r = BOD_5 removed, mg/ℓ

g. Calculate sludge production.

$$\Delta X_V = 8.34[a(S_r)(Q) - (b)(X_V)(V) - Q(SS)_{eff} + Q(VSS)f' + Q(SS - VSS)]$$

where

ΔX_V = volatile sludge produced, lb/day

a = fraction of BOD synthesized

S_r = BOD_5 removed, mg/ℓ

Q = waste flow, mgd

b = endogenous respiration rate, 1/day

X_V = volatile solids in raw sludge, mg/ℓ

V = aeration tank volume, million gal

$(SS)_{eff}$ = effluent suspended solids, mg/ℓ

VSS = volatile suspended solids in influent, mg/ℓ

f' = degradable fraction of the MLVSS

$(VSS)_{eff}$ = effluent volatile suspended solids, mg/ℓ

h. Calculate solids produced per pound of BOD removed.

$$\frac{\text{lb solids}}{\text{lb BOD}_r} = \frac{\Delta X_V}{Q(S_o - S_e)8.34}$$

where

ΔX_V = volatile sludge produced, lb/day

Q = waste flow, mgd

S_o = influent BOD_5, mg/ℓ

S_e = effluent soluble BOD_5, mg/ℓ

i. Calculate the solids retention time.

$$t_s = \frac{X_a(V)(8.34)}{\Delta X_V}$$

where

t_s = solids retention time, days

X_a = MLSS, mg/ℓ

V = volume of aeration tank, million gal

ΔX_V = volatile sludge produced, lb/day

j. Determine the effluent soluble BOD_5.

$$\frac{S_e}{S_o} = \frac{1}{1 + kX_V t}$$

where

S_e = soluble effluent BOD, mg/ℓ

S_o = influent BOD, mg/ℓ

k = rate constant, 1/mg/hr

X_V = MLVSS, mg/ℓ

t = aeration time, hr

k. Calculate sludge recycle ratio.

$$\frac{Q_r}{Q_{avg}} = \frac{X_a}{X_u - X_a}$$

where

Q_r = volume of recycled sludge, mgd

Q_{avg} = average flow, mgd

X_a = MLSS, mg/ℓ

X_u = suspended solids concentration in returned sludge, mg/ℓ

l. Calculate the nutrient requirements for nitrogen

$$N = 0.123\Delta X_V$$

and phosphorus

$$P = 0.026\Delta X_V$$

where

ΔX_V = sludge produced, lb/day

7-87. Output Data.

a. Aeration Tank.

(1) Reaction rate constant, l/mg/hr.

(2) Sludge produced per BOD removed.

(3) Endogenous respiration rate (b, b').

(4) O_2 utilized per BOD removed.

(5) Influent nonbiodegradable VSS.

(6) Effluent degradable VSS.

(7) lb BOD/lb MLSS-day (F/M).

(8) Mixed liquor suspended solids, mg/ℓ (MLSS).

(9) Mixed liquor volatile suspended solids, mg/ℓ (MLVSS).

(10) Aeration time, hr.

(11) Volume of aeration tank, million gal.

(12) Oxygen required, lb/day.

(13) Sludge produced, lb/day.

(14) Nitrogen requirement, lb/day.

(15) Phosphorus requirement, lb/day.

(16) Sludge recycle ratio, lb/day.

(17) Solids retention time, days.

b. Mechanical Aeration System.

(1) Standard transfer efficiency, lb O_2/hp-hr.

(2) Operating transfer efficiency, lb O_2/hp-hr.

(3) Horsepower required, hp.

c. Diffused Aeration System.

(1) Standard transfer efficiency, percent.

(2) Operating efficiency, percent.

(3) Required air flow, cfm/1000 ft^3.

7-88. Example Calculations (Eckenfelder's Approach).

a. Assume the following design parameters.

(1) $a = 0.73$

(2) $a' = 0.52$

(3) $b = 0.075$/day, $b' = 0.15$/day

(4) $a_o = 0.56$

(5) $f = 0.40$

(6) MLSS = X_a = 6000 mg/ℓ

(7) MLVSS = X_V = 4200 mg/ℓ

(8) $\theta = 1.02$

(9) $f' = 0.53$

(10) F/M = 0.06

(11) S_e = 10 mg/ℓ

b. Adjust the BOD removal rate constant for temperature.

$$K_T = K_{20}\theta^{T-20}$$

where

K_T = removal rate constant at T°C

K_{20} = removal rate constant at 20°C, 0.0010

θ = 1.02

T = 15°C

$$K_T = 0.001(1.02)^{15-20}$$

$$\underline{K_T = 0.0009}$$

c. Determine the size of the aeration tank.

$$V = \frac{a_o(S_o - S_e)Q_{avg}}{X_V(f')b}$$

where

V = volume of aeration tank, million gal

a_o = 0.56

S_o = influent BOD_5, 200 mg/ℓ

S_e = effluent soluble BOD_5, 10 mg/ℓ

Q_{avg} = average flow, 1.0 mgd

X_V = MLVSS, 4200 mg/ℓ

f' = 0.53

b = 0.075/day

$$V = \frac{0.56(200 - 10)1.0}{4200(0.53)0.075}$$

$$\underline{V = 0.64 \text{ million gal}}$$

d. Calculate detention time.

$$t = \frac{V}{Q} 24$$

where

t = detention time, hr

V = volume, 0.64 million gal

Q = average flow, 1.0 mgd

$$t = \frac{0.64}{1.0} (24)$$

$$\underline{t = 15 \text{ hr}}$$

e. Assume organic loading and calculate detention time.

$$t = \frac{24(S_o)}{X_V(F/M)}$$

where

t = detention time, hr

S_o = influent BOD_5, 200 mg/ℓ

X_V = MLVSS, 4200 mg/ℓ

F/M = 0.06

$$t = \frac{24(200)}{4200(0.06)}$$

$$\underline{t = 19 \text{ hr}}$$

Select larger detention time. $\underline{t = 19 \text{ hr}}$

f. Determine oxygen requirements allowing 60 percent for nitrification during summer.

$$O_2 = [a'S_rQ_{avg} + b'X_VV + 0.6(4.57)TKN(Q)]8.34$$

where

O_2 = oxygen required, lb/day

a' = 0.56

$S_r = S_o - S_e$ = 190 mg/ℓ

Q_{avg} = average flow, 1.0 mgd

b' = 0.15/day

X_V = MLVSS, 4200 mg/ℓ

V = volume of aeration tank, 0.64 million gal

4.57 = parts oxygen required per part TKN

TKN = total Kjeldahl nitrogen, 30 mg/ℓ

$$O_2 = [0.56(190)1.0 + 0.15(4200)0.64 + 0.6(4.57)30(1.0)]8.34$$

$$\underline{O_2 = 4936 \text{ lb/day}}$$

g. Calculate oxygen required per pound of BOD removed.

$$\frac{\text{lb } O_2}{\text{lb BOD}_r} = \frac{O_2}{Q_{avg}(S_r)8.34}$$

where

O_2 = oxygen required, 4936 lb/day

Q_{avg} = average flow, 1.0 mgd

S_r = BOD removed, 190 mg/ℓ

$$\frac{\text{lb } O_2}{\text{lb BOD}_r} = \frac{4936}{190(1.0)8.34}$$

$$\underline{\frac{\text{lb } O_2}{\text{lb BOD}_r} = 3.0 \geq 1.5 \quad \text{(OK)}}$$

h. Calculate sludge production.

$$\Delta X_V = [aS_rQ - bX_VV - Q(SS)_{eff} + Q(VSS)f' + Q(SS - VSS)]8.34$$

where

ΔX_V = sludge produced, lb/day

a = 0.73

S_r = BOD removed, $S_o - S_e$ = 190 mg/ℓ

Q = average flow, 1.0 mgd

b = 0.075/day

X_V = MLVSS 4200 mg/ℓ

V = volume of aeration tank, 0.64 million gal

$(SS)_{eff}$ = solids in effluent, 20 mg/ℓ

VSS = volatile solids in influent, 150 mg/ℓ

f' = 0.53

SS = solids in influent, 200 mg/ℓ

$$\Delta X_V = [0.73(190)1.0 - 0.075(4200)0.64 - 1.0(20) + 1.0(150)0.53 + 1.0(200 - 150)]8.34$$

$$\underline{\Delta X_V = 389 \text{ lb/day}}$$

i. Calculate solids produced per pound of BOD removed.

$$\frac{\text{lb solids}}{\text{lb BOD}_r} = \frac{\Delta X_V}{Q(S_o - S_e)8.34}$$

where

ΔX_V = sludge produced, 389 lb/day

Q = average flow, 1.0 mgd

S_o = influent BOD, 200 mg/ℓ

S_e = effluent BOD, 10 mg/ℓ

$$\frac{\text{lb solids}}{\text{lb BOD}_r} = \frac{389}{1.0(200 - 10)8.34}$$

$$\frac{\text{lb solids}}{\text{lb BOD}_r} = 0.25 \simeq 0.2 \quad \text{(OK)}$$

j. Calculate solids retention time.

$$t_s = \frac{X_a V 8.34}{\Delta X_V}$$

where

t_s = solids retention time, days

X_a = MLSS, 6000 mg/ℓ

V = volume of aeration tank, 0.64 million gal

ΔX_V = solids produced, 389 lb/day

$$t_s = \frac{6000(0.64)8.34}{389}$$

$$t_s = 82 \text{ days}$$

k. Determine effluent soluble BOD_5.

$$\frac{S_e}{S_o} = \frac{1}{1 + kX_V t}$$

where

S_e = soluble effluent BOD, mg/ℓ

S_o = influent BOD, 200 mg/ℓ

K = reaction rate constant, 0.0009

X_V = MLVSS, 4200 mg/ℓ

t = detention time, 19 hr

$$\frac{S_e}{200} = \frac{1}{1 + (0.0009)4200(19)}$$

$$\underline{S_e = 2.7 \text{ mg/}\ell}$$

l. Calculate sludge recycle ratio.

$$\frac{Q_r}{Q_{avg}} = \frac{X_a}{X_u - X_a}$$

where

Q_r = recycle flow, mgd

Q_{avg} = average flow, 1.0 mgd

X_a = MLSS, 6000 mg/ℓ

X_u = underflow concentration, 10,000 mg/ℓ

$$\frac{Q_r}{1.0} = \frac{6,000}{10,000 - 6,000}$$

$$\underline{Q_r = 1.5 \text{ mgd}}$$

m. Calculate nutrient requirements for nitrogen.

$$N = 0.123\Delta X_V$$

$$N = 0.123(389)$$

$$N = 48 \text{ lb/day}$$

for phosphorus

$$P = 0.026\Delta X_V$$

$$P = 0.026(389)$$

$$P = 10 \text{ lb/day}$$

N in influent = 30 mg/ℓ(Q)8.34

= 30(1.0)8.34

= 250 lb/day > 48 lb/day

<u>N to be added = none</u>

P in influent = 15 mg/ℓ(Q)8.34

= 15(1.0)8.34

= 125 lb/day > 10 lb/day

P to be added = none

7-89. <u>Cost Data</u>. Appropriate cost data and economic evaluation may be found in Chapter 8.

7-90. <u>Bibliography</u>.

a. Guillaume, F. P., "Evaluation of the Oxidation Ditch as a Means of Wastewater Treatment in Ontario," Research Publication No. 6, Jul 1964, The Ontario Wastewater Commission, Ontario, Canada.

b. Lakeside Engineering Corporation, "Rotor Aeration," Apr 1960.

c. Metcalf and Eddy, Inc., <u>Wastewater Engineering; Collection, Treatment, and Disposal</u>, McGraw-Hill, New York, 1972.

d. Nesbitt, J. B., "Removal of Phosphorous from Municipal Sewage Plant Effluents," Engineering Research Bulletin B-93, 1966, College of Engineering, Pennsylvania State University, University Park, Pa.

e. Prather, B. F., "Wastewater Aeration," The Oil and Gas Journal, Vol 57, No. 49, 1959, pp 78-80, 84, 86-91.

f. U. S. Department of Transportation, "Oxidation Ditch Sewage Waste Treatment Process," Water Supply and Waste Disposal Series, Vol 6, Apr 1972, U. S. Department of Transportation, Washington, D. C.

g. Zeper, J. and DeMan, A., "New Developments in the Design of Activated Sludge Tanks with Low BOD Loadings," 5th International Water Pollution Research Conference, Jul-Aug 1971, San Francisco, Calif.

h. Parker, H. W., "Water Supply and Waste Disposal Series, Oxidation Ditch Sewage Treatment Process," Apr 1972, U. S. Department of Transportation, Federal Highway Administration.

Section XIII. NITRIFICATION-DENITRIFICATION

7-91. Background.

a. General. Nitrogen exerts an oxygen demand in the unoxidized state (NH_3-N) and also contributes to eutrophication of natural waters. Hence, nitrogen is considered a pollutant and, in many cases, removal is required. Several methods have been developed for nitrogen removal; perhaps the most promising biological process is the nitrification-denitrification process. Depending on the forms of nitrogen present in the wastewater, biological nitrogen removal can be accomplished in one or more stages (fig. 7-10). When the ammonia form is present, two stages are required. The initial stage involves the conversion of ammonium to nitrates (called nitrification) by the aerobic bacteria (nitrosomonas and nitrobacter). The second stage (denitrification) consists of the anaerobic conversion of nitrate to nitrogen gas. If the nitrogen is already in the form of nitrate, as in the case of irrigation return water, only the second stage (or denitrification) is required.

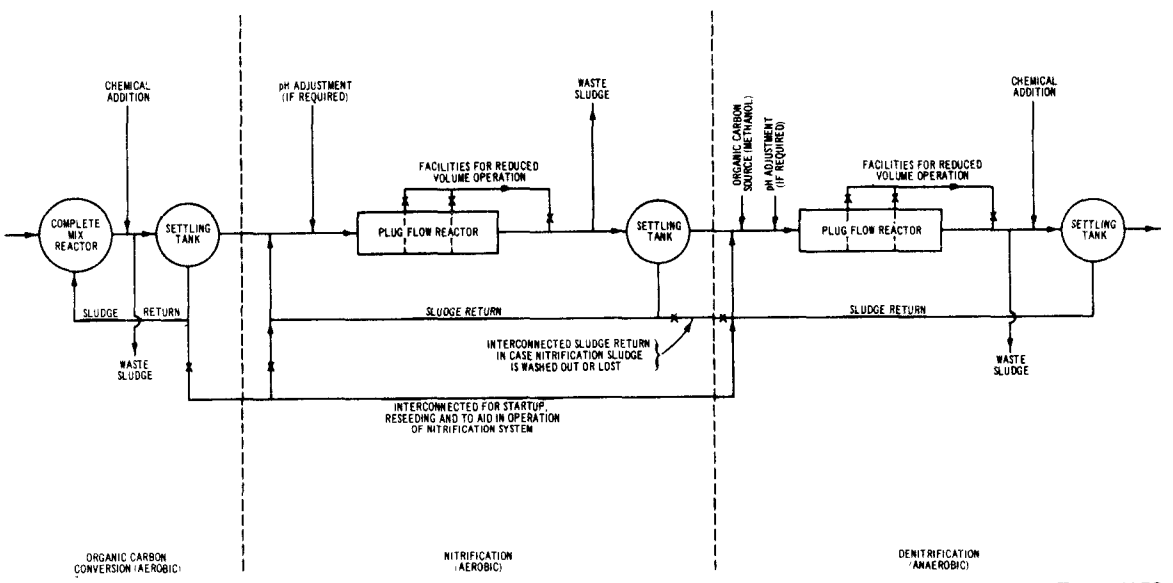

From Metcalf and Eddy, 1972

Figure 7-10. Flow sheet for a three-stage biological treatment process for nitrogen removal.

b. Nitrification. Nitrification can be accomplished in conventional activated sludge reactors by increasing the solids retention time such that it is greater than the growth rate of the nitrifier (nitrosomonas). Nitrifying bacteria can exert a considerable oxygen demand; therefore, sufficient air must be provided to the system. However, nitrification is usually carried out in a separate reactor, which allows better flexibility and optimum performance of both the carbonaceous oxidation and nitrification.

c. Denitrification. Denitrification results from the utilization of chemically bound oxygen (NO_3) by facultative organisms in the absence of dissolved oxygen. Since denitrification takes place after the aerobic removal of carbon it may be necessary to add some carbon source in the denitrification tank for use by the denitrifying bacteria in cell synthesis. A number of studies have been conducted to evaluate the denitrification process (d, f, g, h, and i, para 7-98).

7-92. Input Data.

a. Nitrification (following first stage complete mix).

(1) Wastewater flow (average and peak hourly), mgd.

(2) Wastewater characteristics.

(a) BOD_5, mg/ℓ.

(b) NH_3-N (average and peak), mg/ℓ.

(c) Temperature, °C.

(d) pH.

(3) Degree of nitrification desired, percent.

b. Denitrification (following nitrification).

(1) Wastewater flow (average and peak), mgd.

(2) Effluent quality from nitrification stage.

(a) NO_3, NO_2, mg/ℓ.

(b) Dissolved oxygen, mg/ℓ.

(c) Temperature, °C.

(d) pH.

(3) Degree of nitrification desired, percent.

7-93. Design Parameters.

a. Nitrification.

(1) NH_3 loading versus temperature and MLVSS curve (fig. 7-11).

(2) Correction factor of loading for pH (fig. 7-12).

(3) MLSS, range 1500-2500 mg/ℓ.

(4) MLVSS ≈ 0.8 MLSS.

(5) Percent nitrification, range 60-70 percent.

b. Denitrification.

(1) NO_3 lb/day/1000 ft^3 versus temperature and MLVSS (figs. 7-13 and 7-14).

(2) MLSS ≈ 1500-2500 mg/ℓ.

(3) MLVSS ≈ 0.8 MLSS.

(4) Methanol requirements (3-3.5 lb/lb NO_3).

7-94. Design Procedure. The design procedures for nitrification and denitrification are based on empirical relationships developed by Sawyer (para 7-98h).

a. Nitrification.

(1) Select a MLVSS.

(2) Calculate the ammonia (NH_3) load, lb/day.

$$\left(NH_3\text{-}N\right)_{avg} = (Q_{avg})(8.34)(NH_3\text{-}N)$$

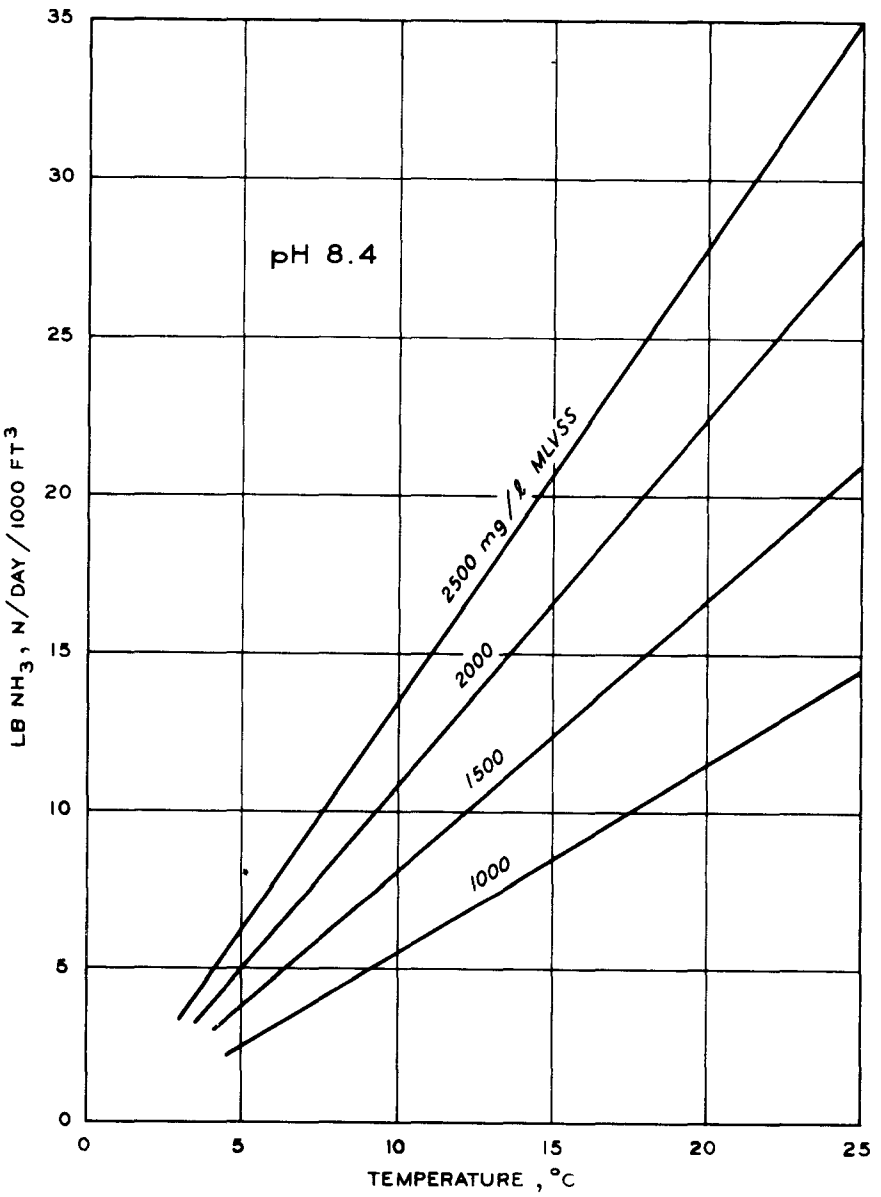

Figure 7-11. Permissible nitrification tank loadings.

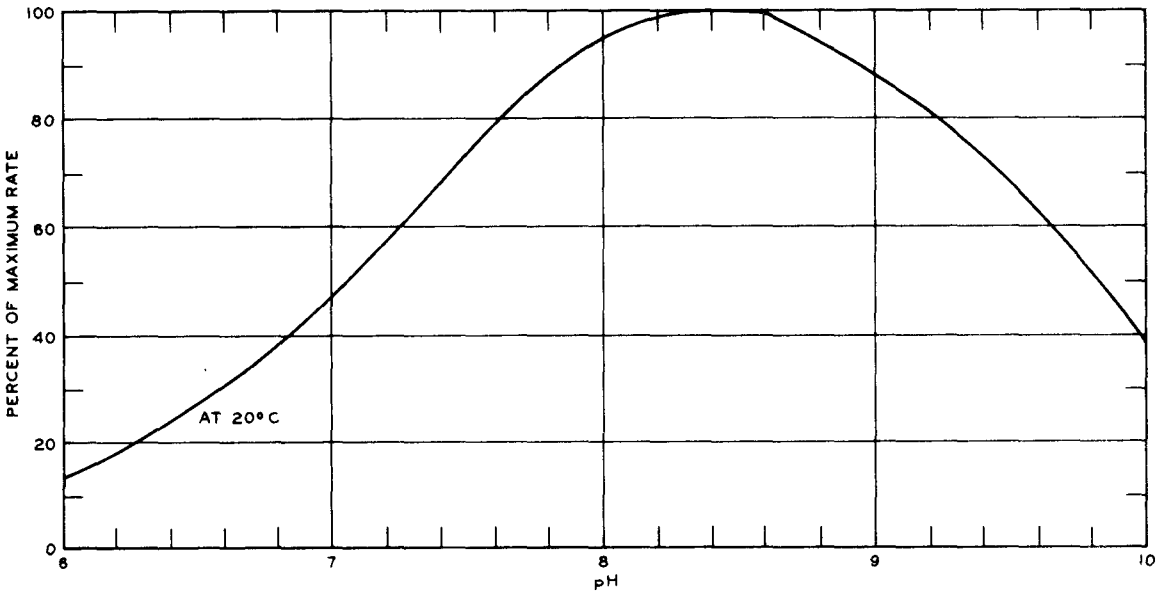

Figure 7-12. Percent of maximum rate of nitrification at constant temperature versus pH.

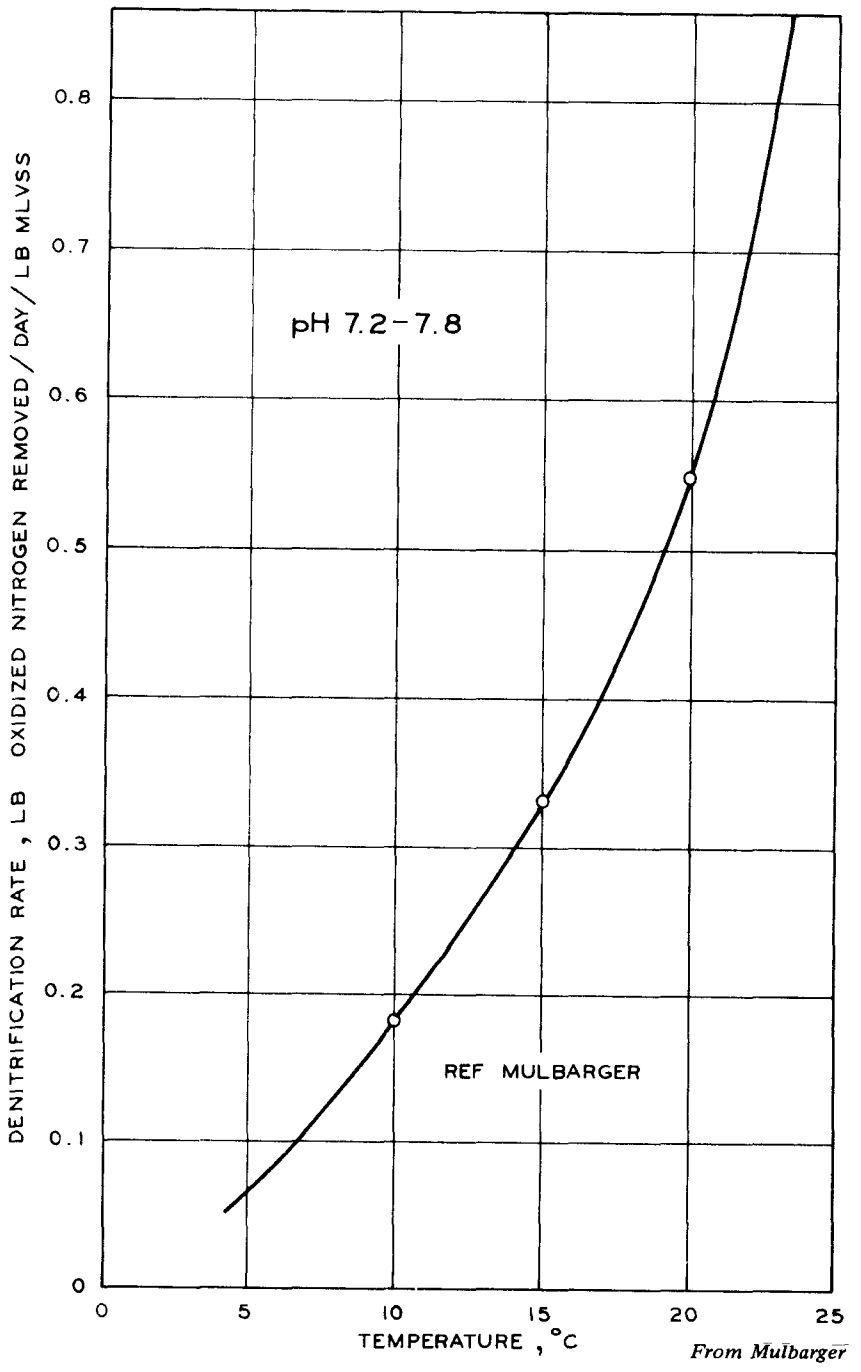

Figure 7-13. Effect of temperature upon rate of denitrification.

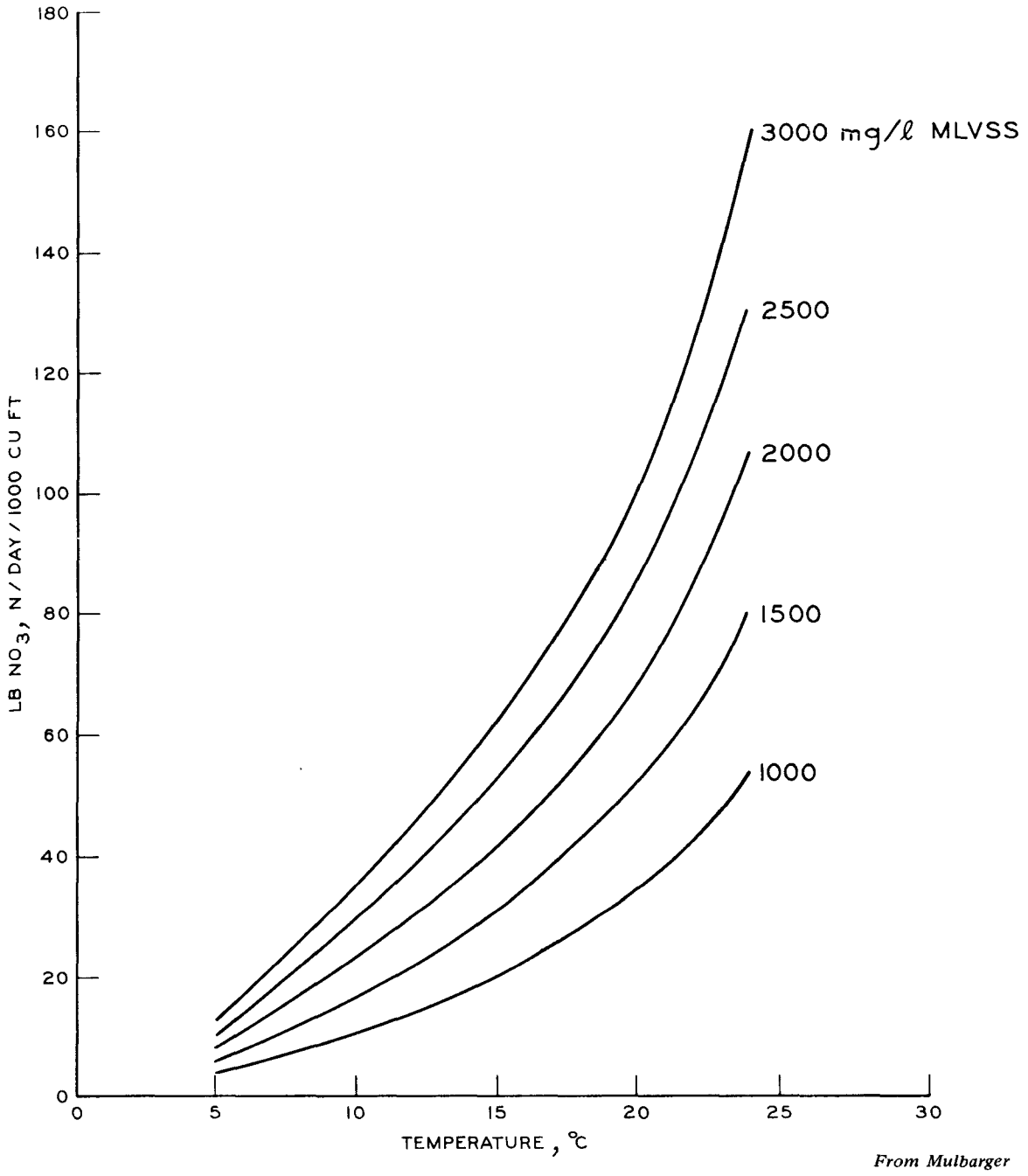

From Mulbarger

Figure 7-14. Permissible denitrification tank loadings.

$$\left(NH_3\text{-}N\right)_p = \left(NH_3\text{-}N\right)_{avg}\left(\frac{Q_p}{Q_{avg}}\right)$$

where

$NH_3\text{-}N$ = ammonia, mg/ℓ

$\left(NH_3\text{-}N\right)_p$ = peak NH_3, lb/day

$\left(NH_3\text{-}N\right)_{avg}$ = average NH_3, lb/day

Q_p = peak flow, mgd

Q_{avg} = average flow, mgd

(3) Turn to Figure 7-11; for winter temperature, °C, and MLVSS selected, determine the allowable loading of ammonia, lb/1000 ft^3/day at the optimum pH (8.4).

(4) Then turn to Figure 7-12; adjust loading for operating pH (see Input Data).

(5) Calculate volume of tank required.

$$V = \frac{\left(NH_3\right)_{avg}}{(NH_3)\text{ adjusted}} \times 1000$$

where

V = volume of the tank, ft^3

$\left(NH_3\right)_{avg}$ = average ammonia load, lb/day

(NH_3) adjusted = allowable loading adjusted, lb/1000 ft^3/day

(6) Determine oxygen requirements: total oxygen = $\left(O_2\right)_N + \left(O_2\right)_{BOD}$.

(a) For nitrification.

$$\left(O_2\right)_N = (4.57)\left(\frac{\%\text{ nitrification}}{100}\right)\left(NH_3\right)_p$$

where

$\left(O_2\right)_N$ = oxygen, lb/day

$\left(NH_3\right)_p$ = peak NH_3, lb/day

(b) For BOD removal.

$$\left(O_2\right)_{BOD} = (1.5)(BOD_5)(Q_{avg})(8.34)$$

where

$\left(O_2\right)_{BOD}$ = oxygen, lb/day

BOD_5 = influent BOD_5 to nitrification tank, mg/ℓ

Q_{avg} = average flow, mgd

(7) Design aeration systems.

(a) Diffused Aeration System.

1 Assume the following design parameters.

a Standard transfer efficiency, percent, from manufacturer (5-8 percent).

b O_2 transfer in waste/O_2 transfer in water ≈0.9.

c O_2 saturation in waste/O_2 saturation in water ≈0.9.

d Correction factor for pressure ≈1.0.

2 Select summer operating temperature (25-30°C).

3 Adjust standard transfer efficiency to operating conditions.

$$OTE = STE \frac{\left[\left(C_s\right)_T (\beta)(p) - C_L\right]}{9.17} \alpha(1.02)^{T-20}$$

where

OTE = operating transfer efficiency, percent

STE = standard transfer efficiency, percent

$(C_s)_T$ = O_2 saturation at selected summer temperature, mg/ℓ

β = O_2 saturation in waste/O_2 saturation in water ≈ 0.9

p = correction factor for pressure ≈ 1.0

C_L = minimum dissolved oxygen to be maintained in the basin $\geqslant 2.0$ mg/ℓ

α = O_2 transfer in waste/O_2 transfer in water ≈ 0.9

T = temperature, °C

4 Calculate required air flow.

$$R_a = \frac{O_2(10)^5(7.48)}{(OTE)\left(0.0176\ \frac{lb\ O_2}{ft^3\ air}\right)\left(1440\ \frac{min}{day}\right)V}$$

where

R_a = required air flow, cfm/1000 ft^3

O_2 = oxygen required, lb/day

OTE = operating transfer efficiency, percent

V = volume of the basin, gal

(b) Mechanical Aeration System.

1 Assume the following design parameters.

a Standard transfer efficiency, lb/hp-hr (0 dissolved oxygen, 20°C, and tap water).

b O_2 transfer in waste/O_2 transfer in water ≈ 0.9.

c Correction factor for pressure ≈1.0.

d O_2 = saturation in waste/O_2 saturation in water ≈0.9.

2 Select summer operating temperature (25-30°C) and determine (from standard tables) O_2 saturation.

3 Adjust standard transfer efficiency to operating conditions.

$$OTE = STE \frac{\left[\left(C_s\right)_T (\beta)(p) - C_L\right]}{9.17} \alpha(1.02)^{T-20}$$

where

OTE = operating transfer efficiency, lb O_2/hp-hr

STE = standard transfer efficiency, lb O_2/hp-hr

$\left(C_s\right)_T$ = O_2 saturation at selected summer temperature, mg/ℓ

β = O_2 saturation in waste/O_2 saturation in water ≈0.9

p = correction factor for pressure ≈1.0

C_L = minimum dissolved oxygen to be maintained in the basin ⩾ 2.0 mg/ℓ

α = O_2 transfer in waste/O_2 transfer in water ≈0.9

T = temperature, °C

4 Calculate horsepower requirement.

$$hp = \frac{O_2}{\left(OTE \frac{lb\ O_2}{hp\text{-}hr}\right)(24)(V)} \times 1000$$

where

hp = horsepower required per 1000 gal

O_2 = oxygen required, lb/day

OTE = operating transfer efficiency, lb O_2/hp-hr

V = volume of the basin, gal

(8) Determine sludge production.

$$\Delta_{X_a} \leq 0.1 \text{ lb}/\left(\text{lb-NH}_3\right)_{\text{removed}}$$

$$\Delta_{X_a} = (0.1)\left(NH_3\right)_{avg}\left(\frac{\%\text{ nitrification}}{100}\right)$$

where

Δ_{X_a} = sludge produced, lb/day

$\left(NH_3\right)_{avg}$ = average NH_3 loading, lb/day

(9) Determine lime requirements; for winter conditions add 5.4 lb of hydrated lime per pound of NH_3 removed to maintain desired pH.

b. Denitrification.

(1) Calculate NO_3 loading.

$$\left(NO_3\right)_{avg} = (NO_3)(Q_{avg})(8.34)$$

$$\left(NO_3\right)_p = \left(NO_3\right)_{avg}(Q_p/Q_{avg})$$

where

$\left(NO_3\right)_{avg}$ = average NO_3 loading, lb/day

Q_{avg} = average flow, mgd

$\left(NO_3\right)_p$ = peak NO_3 loading, lb/day

Q_p = peak flow, mgd

(2) Turn to Figure 7-14; for winter temperature and MLVSS determine NO_3 loading (lb NO_3/1000 ft^3/day) at optimum pH.

(3) Adjust loading for operating pH (Table 7-1).

(4) Calculate volume of denitrification tank.

$$V = \frac{\left(NO_3\right)_p}{NO_3 \text{ loading}} (1000)$$

where

V = volume of the denitrification tank, ft^3

$\left(NO_3\right)_p$ = peak NO_3 loading, lb/day

NO_3 loading = lb/1000 ft^3/day

(5) Calculate methanol requirements.

$$\text{Methanol (lb/day)} = 2.47(NO_3) + 1.53(NO_2) + 0.87(\text{Dissolved Oxygen})$$

Or from rule of thumb

$$\text{Methanol (lb/day)} = (2.5) \text{ lb/lb } NO_3 \text{ reduced}$$
$$= (2.5)\left(NO_3\right)_{avg} (\%\ NO_3 \text{ reduced})$$

(6) Determine sludge production.

$$\Delta_{X_a} = 0.2 \text{ lb/lb methanol added}$$

or

$$\Delta_{X_a} = 0.7 \text{ lb/lb } NO_3 \text{ reduced}$$

where

Δ_{X_a} = sludge produced, lb/day

7-95. Output Data.

a. Nitrification.

(1) Winter temperature, °C.

(2) pH.

(3) Effluent ammonia, mg/ℓ.

(4) Mixed liquor volatile solids, mg/ℓ (MLVSS).

(5) Ammonia loading, lb/1000 ft^3/day.

(6) Volume, ft^3.

(7) Oxygen required, lb/day.

(8) Sludge produced, lb/day.

(9) Lime required, lb/day.

(10) Mechanical aeration system.

(a) Standard transfer efficiency, lb O_2/hp-hr.

(b) Operating transfer efficiency, lb O_2/hp-hr.

(c) Horsepower required/1000 gal.

(11) Diffused aeration system.

(a) Standard transfer efficiency, percent.

(b) Operating transfer efficiency, percent.

(c) Required air flow, cfm/1000 ft^3.

b. Intermediate Clarifier. (See chap. 5, sec IX, Sedimentation (Secondary Clarifier).)

c. Denitrification.

(1) Winter temperature, °C.

(2) pH.

(3) Influent dissolved oxygen, mg/ℓ.

(4) Nitrate loading, mg/ℓ.

(5) Mixed liquor volatile solids, mg/ℓ (MLVSS).

(6) Volume, ft^3.

(7) Sludge produced, lb/day.

(8) Methanol required, lb/day.

d. Final Clarifier. (See chap. 5, sec IX, Sedimentation (Secondary Clarifier).)

7-96. Example Calculations.

a. Nitrification.

(1) Select MLVSS = 0.8 MLSS.

$$MLVSS = 0.8(2000)$$

$$\underline{MLVSS = 1600\ mg/\ell}$$

(2) Calculate NH_3 load.

$$\left(NH_3\text{-}N\right)_{avg} = Q_{avg}(8.34)(NH_3\text{-}N)$$

$$\left(NH_3\text{-}N\right)_p = \left(NH_3\text{-}N\right)_{avg}\left(\frac{Q_p}{Q_{avg}}\right)$$

where

$\left(NH_3\text{-}N\right)_{avg}$ = average NH_3 load, lb/day

Q_{avg} = average flow, 1.0 mgd

NH_3-N = ammonia concentration, 30 mg/ℓ

$\left(NH_3\text{-}N\right)_p$ = peak NH_3 load, lb/day

Q_p = peak flow, 2.0 mgd

$$\left(NH_3\text{-}N\right)_{avg} = 1.0(8.34)30$$

$$\underline{\left(NH_3\text{-}N\right)_{avg} = 250 \text{ lb/day}}$$

$$\left(NH_3\text{-}N\right)_p = 250\left(\frac{2.0}{1.0}\right)$$

$$\underline{\left(NH_3\text{-}N\right)_p = 500 \text{ lb/day}}$$

(3) Select winter temperature (10°C) and MLVSS (1600 mg/ℓ) and determine allowable ammonia loading from Figure 7-10 at pH = 8.4.

$$\underline{NH_3 = 8 \text{ lb/day/1000 ft}^3}$$

(4) Adjust NH_3 loading to operating pH from Figure 7-11 (pH = 7.8)

$$\left(NH_3\right)_{adjusted} = 87\%(8 \text{ lb/day/1000 ft}^3)$$

$$\underline{\left(NH_3\right)_{adjusted} = 7 \text{ lb/day/1000 ft}^3}$$

(5) Calculate volume of tank required.

$$V = \frac{\left(NH_3\right)_{avg}}{\left(NH_3\right)_{adjusted}}(1000)$$

where

V = volume of tank, ft^3

$(NH_3)_{avg}$ = ammonia load, 250 lb/day

$(NH_3)_{adjusted}$ = plant loading, 7 lb/day/1000 ft^3

$$V = \frac{250}{7}(1000)$$

$$\underline{V = 35{,}700\ ft^3}$$

(6) Determine the oxygen requirements.

(a) For nitrification

$$(O_2)_N = 4.57\left(\frac{\%\ \text{nitrification}}{100}\right)(NH_3\text{-}N)_p$$

where

$(O_2)_N$ = oxygen required for nitrification, lb/day

$(NH_3\text{-}N)_p$ = peak ammonia load, 500 lb/day

Percent nitrification = 60 percent

$$(O_2)_N = 4.57\left(\frac{60}{100}\right)500$$

$$\underline{(O_2)_N = 1371\ lb/day}$$

(b) For BOD-removal

$$(O_2)_{BOD} = 1.5(BOD_5)Q_{avg}(8.34)$$

where

$(O_2)_{BOD}$ = oxygen required for BOD removal, lb/day

BOD_5 = influent BOD_5 from secondary treatment, 30 mg/ℓ

Q_{avg} = average flow, 1.0 mgd

$$\left(O_2\right)_{BOD} = 1.5(30)1.0(8.34)$$

$$\underline{\left(O_2\right)_{BOD} = 375.3 \text{ lb/day}}$$

(c) $O_2 = \left(O_2\right)_N + \left(O_2\right)_{BOD}$.

$$O_2 = 1371 + 375$$

$$\underline{O_2 = 1746 \text{ lb/day}}$$

(7) Design aeration system (diffused).

(a) Assume the following design parameters

1 STE = 7 percent

2 $\alpha = 0.9$

3 $\beta = 0.9$

4 $p = 1.0$

(b) Select summer operating temperature and determine O_2 saturation $\left(C_s\right)_{25} = 8.2$ mg/ℓ .

(c) Adjust standard transfer efficiency to operating conditions.

$$OTE = STE \frac{\left[\left(C_s\right)_T \beta p - C_L\right]}{9.17} \alpha 1.02^{T-20}$$

where

OTE = operating transfer efficiency, percent

STE = standard transfer efficiency, 7 percent

$\left(C_s\right)_T = 8.2$ mg/ℓ

$\beta = 0.9$

$p = 1.0$

C_L = minimum dissolved oxygen, 0 mg/ℓ

$\alpha = 0.9$

$T = 25°C$

$$OTE = 7.0 \frac{[8.2(0.9)1.0 - 0.0]}{9.17} 0.9(1.02)^{25-20}$$

$$\underline{OTE = 5.6\%}$$

(d) Calculate required air flow.

$$R_a = \frac{O_2 10^5 (7.48)}{OTE(0.0176)1440V}$$

where

R_a = required air flow, cfm/1000 ft^3

O_2 = oxygen required, 1746 lb/day

OTE = 5.6 percent

V = volume of tank, 35,700 gal

$$R_a = \frac{1746(10^5)7.48}{5.6(0.0176)1440(35,700)}$$

$$\underline{R_a = 258 \text{ cfm/1000 ft}^3}$$

(8) Determine sludge production.

$$\Delta_{X_a} = 0.1\left(NH_3\text{-}N\right)_{avg} \left(\frac{\%\ \text{nitrification}}{100}\right)$$

where

Δ_{X_a} = sludge produced, lb/day

$(NH_3\text{-}N)_{avg}$ = average ammonia load, 250 lb/day

% nitrification = 60%

$$\Delta_{X_a} = 0.1(250)\ \frac{60}{100}$$

$$\underline{\Delta_{X_a} = 15\ \text{lb/day}}$$

(9) Determine lime requirements for winter

$$\text{Lime} = 5.4\left(NH_3\text{-}N\right)_{avg}\left(\frac{\%\ \text{nitrification}}{700}\right)$$

$$\text{Lime} = 5.4(250)\ \frac{60}{100}$$

$$\underline{\text{Lime} = 810\ \text{lb/day}}$$

b. <u>Denitrification</u>.

(1) Calculate NO_3 loading.

$$\left(NO_3\right)_{avg} = (NO_3)(Q_{avg})8.34$$

$$\left(NO_3\right)_p = \left(NO_3\right)_{avg}\left(\frac{Q_p}{Q_{avg}}\right)$$

where

$\left(NO_3\right)_{avg}$ = average NO_3 loading, lb/day

Q_{avg} = average flow, 1.0 mgd

$\left(NO_3\right)_p$ = peak NO_3 loading, lb/day

Q_p = peak flow, 2.0 mgd

$$\left(NO_3\right)_{avg} = 30(1.0)8.34$$

$$\underline{\left(NO_3\right)_{avg} = 250 \text{ lb/day}}$$

$$\left(NO_3\right)_p = 250 \frac{2.0}{1.0}$$

$$\underline{\left(NO_3\right)_p = 500 \text{ lb/day}}$$

(2) Determine NO_3 loading from Table 7-13.

$$NO_3 = 18 \text{ lb/day/1000 ft}^3$$

(3) Adjust pH to operating conditions. Assume pH = 7.0, therefore, optimum conditions.

(4) Calculate volume of denitrification tank.

$$V = \frac{\text{lb } NO_3\text{/day}}{NO_3 \text{ loading}} 1000$$

where

V = volume of denitrification tank, ft^3

lb NO_3/day = $\left(NO_3\right)_p$ = 500 lb/day

NO_3 loading = 18 lb/day/1000 ft^3

$$V = \frac{500}{18} (1000)$$

$$\underline{V = 27{,}778 \text{ ft}^3}$$

(5) Calculate methanol (carbon) requirements.

$$\text{Methanol (lb/day)} = 2.5 \text{ lb/lb } NO_3 \text{ reduced,}$$
$$= 2.5 \left(NO_3\right)_{avg} \quad (\% \ NO_3 \text{ reduced})$$
$$= 2.5(250)$$

$$\underline{\text{Methanol} = 625 \text{ lb/day}}$$

(6) Determine sludge production

$$\Delta_{X_a} = 0.2 \text{ lb/lb methanol added}$$

or

$$\Delta_{X_a} = 0.7 \text{ lb/lb } NO_3 \text{ reduced}$$

$$\Delta_{X_a} = 0.2(625)$$

$$\underline{\Delta_{X_a} = 125 \text{ lb/day}}$$

7-97. Cost Data. Appropriate cost data and economic evaluation may be found in Chapter 8.

7-98. Bibliography.

a. Borchardt, J. A., "Nitrification in the Activated Sludge Process," The Activated Sludge Process, Bulletin, University of Michigan, Ann Arbor, Mich.

b. Brown and Caldwell, Engineers for EPA, "Nitrification and Denitrification Facilities," May 7-9, 1974, U. S. Environmental Protection Agency Technology Transfer, Orlando, Fla.

c. Eckenfelder, W. W., Jr., "General Concepts of Biological Treatment," Manual of Treatment Processes, Vol 1, 1969, Environmental Science Services, Inc., Briarcliff Manor, New York.

d. McCarty, P. L., "Biological Processes for Nitrogen Removal: Theory and Application," Proceedings, Twelfth Sanitary Engineering Conference, 1970, University of Illinois, Urbana, Ill.

e. Mechalas, B. J., Allen, P. M., III, and Matyskiela, W. W., "A Study of Nitrification and Denitrification," Report No. 17010DRD, Jul 1970, U. S. Environmental Protection Agency, Washington, D. C.

f. Metcalf and Eddy, Inc., Wastewater Engineering; Collection, Treatment, and Disposal, McGraw-Hill, New York, 1972.

g. Moore, S. F. and Schroeder, E. D., "An Investigation of the Effects of Residence Time on Anaerobic Bacterial Denitrification," Water Research, Vol 4, No. 10, 1970, pp 685-694.

h. Mulbarger, M. C., "Nitrification and Denitrification in Activated Sludge Systems," Journal, Water Pollution Control Federation, Vol 43, Oct 1971, pp 2059-2070.

i. Sawyer, C. N., "Nitrification and Denitrification Facilities," Aug 1973, U. S. Environmental Protection Agency, Technology Transfer, Washington, D. C.

j. Seedel, D. F. and Criter, R. W., "Evaluation of Anaerobic Denitrification Processes," Journal, Sanitary Engineering Division, American Society of Civil Engineers, Vol 96, No. SA2, 1970.

Table 7-1. Effect of pH on Denitrification

pH	Condition
At $6.5 \leq pH \leq 7.5$	Optimum
At $6.3 \leq pH \leq 6.5$ At $7.5 \leq pH \leq 7.7$	90% of optimum
At $5.6 \leq pH \leq 6.3$ At $7.7 \leq pH \leq 8.6$	50% of optimum

Section XIV. AEROBIC DIGESTION

7-99. Introduction.

a. Both aerobic and anaerobic digesters are being used in new designs for activated sludge systems; there are advantages and disadvantages to both systems. Before a specific choice can be made, waste characteristics, general climatic conditions, type of sludge handling equipment, and the capacity of the facility must be considered. In a large facility, it may be feasible or desirable to digest primary sludge anaerobically, and secondary sludge aerobically.

b. Aerobic digestion is relatively new, and reliable information on process kinetics and economics is scarce.

c. The aerobic combustion of the sludges is usually depicted as follows.

$$C_5H_7O_2N + 5O_2 = 5CO_2 + 2H_2O + NH_3$$

The NH_3 in the presence of oxygen can be further oxidized to NO_2 to NO_3.

d. Advantages claimed for aerobic as compared with anaerobic digestion are listed below.

(1) VSS is reduced to 40-50 percent--nearly equivalent to that for anaerobic.

(2) Supernatant has lower BOD.

(3) A relatively stable humuslike end product is produced.

(4) More basic fertilizer values are recovered.

(5) Operation is relatively simple.

(6) Capital cost is lower.

(7) Odor is minimal.

(8) Sludges dewater well (this is a controversial statement).

e. The major disadvantages appear to be:

(1) A higher operating cost associated with O_2 supply.

(2) The lack of a useful by-product (no CH_4).

7-100. Background.

a. This method of digestion is capable of handling waste activated, trickling filter, or primary sludges as well as mixtures of the same. The aerobic digester operates on the same principles as the activated sludge process. As food is depleted, the microbes enter the endogenous phase and the cell tissue is aerobically oxidized to CO_2, H_2O, NH_3, NO_2, and NO_3.

b. Up to 80 percent of the cell tissue may be oxidized in this manner; the remaining fractions contain inert and nonbiodegradable materials. Factors to be considered during the design process are characteristics (origin(s)) of the sludge hydraulic residence, true solids loading criteria, energy requirement for mixing, environmental conditions, and process operation.

7-101. Input Data.

a. Sludge production.

(1) Primary, lb/day.

(2) Secondary, lb/day.

b. Solids contents (percent solids).

(1) Primary, percent.

(2) Secondary, percent.

c. Specific gravity.

d. Volatile solids content, percent.

7-102. Design Parameters (Table 7-2).

7-103. Design Procedure.

a. Calculate total quantity of raw sludge.

$$Q_s = \frac{SP(100)}{(\text{specific gravity})(\text{percent solids})(8.34)}$$

where

Q_s = volume of raw sludge to digester, gal/day

SP = sludge produced, lb/day

b. Select hydraulic detention time and calculate digesters' volume.

$$V = (t)(Q_s)$$

where

V = volume of digester, gal

t = hydraulic detention time, days

Q_s = volume of raw sludge to digester, gal/day

c. Check volatile solids loading.

$$VS_\ell = \frac{\text{lb/day VS}}{V}(7.48) < (0.1\text{-}0.2)$$

where

VS_ℓ = volatile solids loading, lb VS/ft^3/day

V = volume of digester, gal

d. Calculate solids retention time.

(1) Assume percent destruction of volatile solids: 40 percent is common but it increases with temperature and retention time from approximately 33 to 70 percent.

(2) Calculate solids accumulation per day.

$$S_{ac} = SP - SP\left(\frac{\%\ \text{volatile}}{100}\right)\left(\frac{\%\ \text{destroyed}}{100}\right)(0.75)$$

where

S_{ac} = solids accumulated per day

SP = sludge produced

(3) Assume MLSS in digester and calculate total capacity of sludge digester.

$$DC = (V)(MLSS)(8.34)(10^{-6})$$

where

DC = digester capacity, lb

V = volume of digester, gal

MLSS = mixed liquor SS in digester, mg/ℓ

(4) Calculate solids retention time.

$$SRT = \frac{DC}{S_{ac}}$$

where

SRT = solids retention time, days

DC = digester capacity, lb

S_{ac} = total solids accumulated, lb/day

e. Calculate sludge wasting schedule. Assume solids content in digested sludge is approximately 2.5 percent.

$$\text{Volume of sludge to be wasted} = \frac{\text{total sludge in digester (lb)(100)}}{\text{(specific gravity)(\% solids)(8.34)}}$$

This volume must be wasted each SRT.

f. Calculate oxygen requirements.

(1) O_2 required for bacterial growth. Assume O_2 required per pound of volatile solids destroyed.

$$O_2 = (O_T)SP\left(\frac{\%\ \text{volatile}}{100}\right)\left(\frac{\%\ \text{destroyed}}{100}\right)$$

where

O_2 = total oxygen required, lb/day

O_T = oxygen required/lb of volatile solids destroyed $\approx$ 2.0 lb

SP = sludge produced, lb/day

(2) Energy for mixing.

(a) Assume standard transfer efficiency, percent.

(b) Assume constants α , β , and p .

(c) Select summer temperature T.

(d) Calculate operating transfer efficiency.

$$OTE = STE\ \frac{\left[(C_s)_T \beta p - C_L\right] \alpha(1.024)^{T-20}}{9.20}$$

where

OTE = operating transfer efficiency, percent

STE = standard transfer efficiency, percent (5-8%)

$(C_s)_T$ = O_2 saturation at the summer temperature

β = (C_s waste/C_s water) $\approx$0.9

p = correction for altitude $\approx$1.0

C_L = minimum oxygen to be maintained in the digester, mg/ℓ

α = (K_{La} waste/K_{La} water) $\approx$0.9

K_{La} = oxygen transfer coefficient

T = temperature, °C

(e) Calculate air supply; check against a minimum of 20 cfm/1000 ft^3.

$$R_S = \frac{O_2(7.48)(10^5)}{(OTE\ \%)\left(0.0176\ \frac{lb\ O_2}{ft^3\ air}\right)1440\left(\frac{min}{day}\right)V}$$

where

R_s = air supply, cfm/1000 ft^3

O_2 = oxygen supply, lb/day

OTE = operating transfer efficiency, percent

V = volume of the basin, gal

7-104. Output Data.

a. Raw sludge specific gravity.

b. Detention time, days.

c. Volatile solids destroyed, percent.

d. Mixed liquor solids, mg/ℓ.

e. Solids in digested sludge, percent.

f. Rate constant, BOD_5 applied to filter.

g. Coefficient of O_2 saturation in waste/O_2 saturation in water.

h. Standard transfer efficiency, percent.

i. Digester volume, gal.

j. Volatile solids loading, lb VS/ft^3/day.

k. Solids accummulated, lb/day.

l. Volume of wasted sludge, gal.

m. Solids retention time, days.

n. Oxygen requirement, lb/day.

o. Air supply, cfm/1000 ft^3.

7-105. Example Calculations.

a. Calculate total quantity of raw sludge.

$$Q_s = \frac{SP(100)}{(\text{specific gravity})(\text{percent solids})8.34}$$

where

Q_s = volume of raw sludge, gpd

SP = sludge produced, 2191 lb/day

Specific gravity = 1.05

Percent solids = 1.0

$$Q_s = \frac{2191(100)}{1.05(1.0)8.34}$$

$$\underline{Q_s = 25{,}020 \text{ gpd}}$$

b. Select detention time and calculate digester volume.

$$V = Q_s t$$

where

V = volume of digester, gal

Q_s = quantity of raw sludge, 25,020 gpd

t = detention time, 15 days

$$V = 25{,}020(15)$$

$$\underline{V = 375{,}300 \text{ gal}}$$

c. Check volatile solids loading.

$$VS_\ell = \frac{\text{lb/day VS}}{V} (7.48)$$

where

VS_ℓ = volatile solids loading, lb VS/ft^3/day

VS = SP(% volatile) = 2191(0.80) = 1753 lb/day

V = volume of digester

$$VS_\ell = \frac{1753}{375,300} (7.48)$$

$$\underline{VS_\ell = 0.035 < 0.1 \quad \text{(OK)}}$$

d. Calculate solids retention time.

(1) Assume percent reduction = 50 percent

(2) Calculate solids accumulation per day

$$S_{ac} = SP - SP\left(\frac{\%\ \text{volatile}}{100}\right)\left(\frac{\%\ \text{destroyed}}{100}\right) 0.75$$

where

S_{ac} = solids accumulation, lb/day

SP = sludge produced, 2191 lb/day

% volatile = 80%

% destroyed = 50%

$$S_{ac} = 2191 - 2191\left(\frac{80}{100}\right)\left(\frac{50}{100}\right) 0.75$$

$$\underline{S_{ac} = 1534 \text{ lb/day}}$$

(3) Assume MLSS in digester and calculate total capacity of digester.

$$DC = V(MLSS)(8.34 \times 10^{-6})$$

where

DC = digester capacity, lb

V = volume of digester, 375,300 gal

MLSS = 12,000 mg/ℓ

$$DC = 375{,}300(12{,}000)(8.34 \times 10^{-6})$$

$$\underline{DC = 37{,}560 \text{ lbs}}$$

(4) Calculate solids retention time

$$SRT = \frac{DC}{S_{ac}}$$

where

SRT = solids retention time, days

DC = digester capacity, 37,560 lb

S_{ac} = solids accumulation, 1,534 lb/day

$$SRT = \frac{37{,}560}{1{,}534}$$

$$\underline{SRT = 24.5 \text{ days}}$$

e. Calculate the sludge wasting schedule.

$$\text{Volume of sludge to be wasted} = \frac{DC(100)}{(\text{specific gravity})(\%\ \text{solids})}\ 8.34$$

where

DC = digester capacity = 37,560 lb

Specific gravity = 1.05

% solids = 2.5%

$$\text{Volume of sludge to be wasted} = \frac{37{,}560(100)}{1.05(2.5)8.34}$$

$$\underline{\text{Volume of sludge to be wasted} = 171{,}566 \text{ gal}}$$

$$\underline{\text{Waste every SRT} = 24.5 \text{ days}}$$

f. Calculate oxygen requirements.

(1) O_2 required for bacterial growth. Assume O_2 required/lb VS destroyed = 2.0.

$$\text{Total } O_2 \text{ required} = 2.0(SP)\left(\frac{\%\text{ volatile}}{100}\right)\left(\frac{\%\text{ destroyed}}{100}\right)$$

$$\text{Total } O_2 \text{ required} = 2.0(2191)\left(\frac{80}{100}\right)\left(\frac{50}{100}\right)$$

$$\underline{\text{Total } O_2 \text{ required} = 1753 \text{ lb/day}}$$

(2) O_2 required for mixing (diffused aeration).

$$OTE = STE \frac{\left[(C_s)_T \beta p - C_L\right]}{9.17} \alpha 1.02^{T-20}$$

where

OTE = operating transfer efficiency, percent

STE = standard transfer efficiency, 8 percent

$(C_s)_T$ = 8.2 mg/ℓ

β = 0.9

p = 1.0

C_L = 2.0 mg/ℓ

α = 0.9

T = 25°C

$$OTE = 8 \frac{[8.2(0.9)1.0 - 2.0]}{9.17} (0.9)1.02^{25-20}$$

$$\underline{OTE = 4.7\%}$$

Check for mixing $\geq$ 20 cfm/1000 ft^3

$$R_s = \frac{O_2 \text{ required } (7.48 \times 10^5)}{OTE(0.0176)1440(V)}$$

where

R_s = air supply, cfm/1000 ft^3

O_2 required = 1753 lb/day

V = volume of digester, 375,300 gal

OTE = 4.7%

$$R_s = \frac{1,753(7.48 \times 10^5)}{4.7(0.0176)1440(375,300)}$$

$$\underline{R_s = 29.3 \text{ cfm/1000 ft}^2 > 20 \quad \text{(OK)}}$$

7-106. Cost Data. Appropriate cost data and economic evaluation may be found in Chapter 8.

7-107. Bibliography.

a. American Society of Civil Engineers and the Water Pollution Control Federation, "Sewage Treatment Plant Design," Manual of Practice No. 8, 1959, 1961, 1967, 1968, Water Pollution Control Federation, Washington, D. C.

b. Burd, R. S., "A Study of Sludge Handling and Disposal," Publication WP-20-4, May 1968, Federal Water Pollution Control Administration, Washington, D. C.

c. College of Engineering, Oklahoma State University, "Aerobic Digestion of Organic Wastes," Report No. 17070DAU, Dec 1971, U. S. Environmental Protection Agency, Washington, D. C.

d. Dick, R. I., "Sludge Treatment, Disposal, and Utilization Literature Review," Journal, Water Pollution Control Federation, Vol 43, Jun 1971, pp 1134-1149.

e. Drier, D. E., "Aerobic Digestion of Solids," Proceedings of 18th Purdue Industrial Waste Conference, 1963, Purdue University, Lafayette, Ind.

f. Drier, D. E., "Aerobic Digestion of Sludge," paper presented at Sanitary Engineering Institute, Mar 1965, University of Wisconsin, Madison, Wis.

g. Eckenfelder, W. W., Jr., Water Quality Engineering for Practicing Engineers, Barnes and Nobel, New York, 1970.

h. Great Lakes-Upper Mississippi River Board of State Sanitary Engineers, "Recommended Standards for Sewage Works (Ten States Standards)," 1971, Health Education Service, Albany, N. Y.

i. Jaworski, N., Lawton, G. W., and Rohlich, G. A., "Aerobic Sludge Digestion," International Journal of Air and Water Pollution, Vol 4, 1961, pp 106-114.

j. Loher, R. C., "Aerobic Digestion-Factors Affecting Design," 9th Great Plains Sewage Works Design Conference, Mar 1965.

k. Lynam, B., McDonnell, G., and Krup, M., "Start-up and Operation of Two New High-Rate Digestion Systems," Journal, Water Pollution Control Federation, Vol 39, Apr 1967, pp 518-535.

l. Malina, F. J., "Aerobic Sludge Stabilization," Manual of Treatment Processes, Vol 1, Environmental Science Services, Inc., Briarcliff Manor, New York, 1969.

m. McKinney, R. E. and O'Brien, W. J., "Activated Sludge - Basic Design Concepts," Journal, Water Pollution Control Federation, Vol 40, Nov 1968, pp 1831-1843.

n. Metcalf and Eddy, Inc., Wastewater Engineering; Collection, Treatment, and Disposal, McGraw-Hill, New York, 1972.

o. Pohland, F. G. and Kang, J. J., "Anaerobic Processes," Journal, Water Pollution Control Federation, Vol 46, No. 6, 1971, pp 1129-1133.

p. Sawyer, C. N. and Grubling, J. S., "Fundamental Considerations in High Rate Digestion," Journal, Sanitary Engineering Division, American Society of Civil Engineers, Vol 86, Mar 1960, pp 49-63.

q. Shindala, A. and Bryme, W. J., "Anaerobic Digestion of Thickened Sludge," Public Works, Vol 101, Feb 1970, pp 73-76.

r. Shindala, A., Dust, J. V., and Champion, A. L., "Accelerated Digestion of Concentrated Sludge," Water and Sewage Works, Vol 117, Sep 1970, pp 329-332.

Table 7-2. Aerobic Digestion Design Parameters

Parameter	Value
Hydraulic detention time, days at 20°C[a]	
Activated sludge only	12 to 16
Activated sludge from plant operated without primary settling	16 to 18
Primary plus activated or trickling-filter sludge	18 to 22
Solids loading, lb volatile solids/ft^3/day	0.1 to 0.2
Oxygen requirements	
BOD_5 in primary sludge, lb/lb cell tissue	≈2
Energy requirements for mixing	
Mechanical aerators, hp/1000 ft^3	0.5 to 1.0
Air mixing, cfm/1000 ft^3	20 to 30
Dissolved oxygen level in liquid, mg/ℓ	1 to 2

[a] Detention times should be increased for temperature below 20°C. If sludge cannot be withdrawn during certain periods (e.g. weekends, rainy weather), additional storage capacity should be provided. Ammonia produced during carbonaceous oxidation is oxidized to nitrate.

Section XV. ANAEROBIC DIGESTION

7-108. Background.

a. This type of digestion can be traced back to the 1850's. The mechanics involved in the process are summarized in Figure 7-15. Anaerobic digestion may be adapted to both stationary and mobile systems for handling solids from waste treatment systems, trailer dump stations, marine dump stations, and vault toilets.

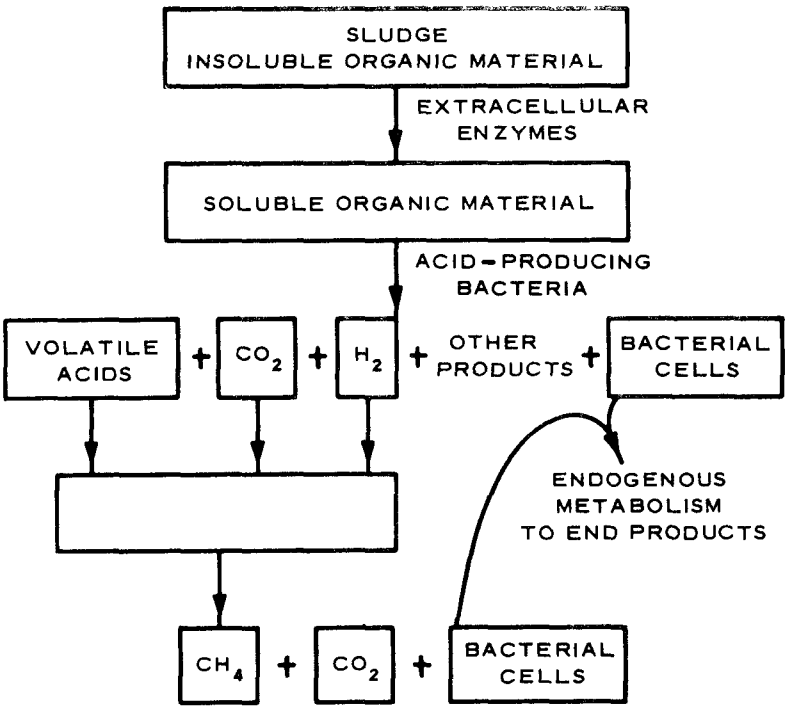

Figure 7-15. Mechanism of anaerobic sludge digestion (Eckenfelder).

b. There are conventional and high-rate digesters; the conventional design uses the one- or two-stage process. In any of these systems, provisions are normally made for sludge heating. The principal difference in the one- and two-stage systems is that, in the two-stage systems, digestion is accomplished in the first tank. Figures 7-16 and 7-17 contain a pictorial explanation of the system.

c. The advantages of anaerobic as compared with aerobic digestion include:

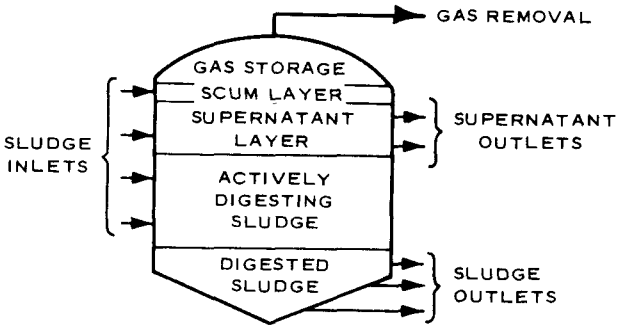

From Metcalf and Eddy

Figure 7-16. Schematic of conventional digester used in the one-stage process.

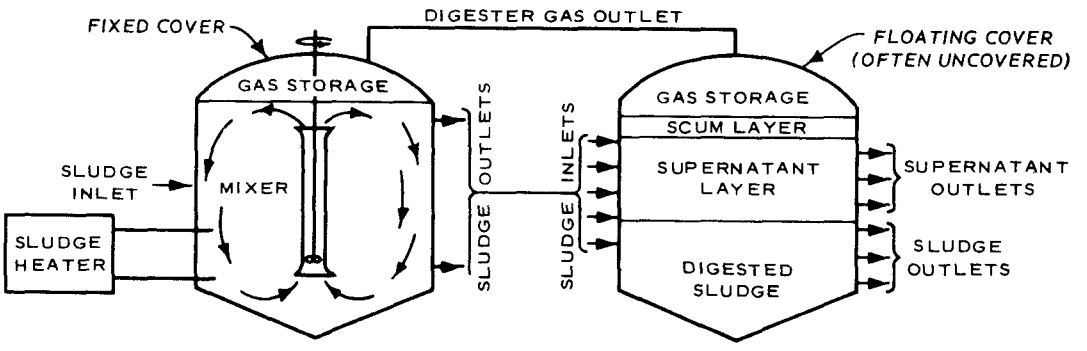

From Metcalf and Eddy

Figure 7-17. Schematic of two-stage digestion process.

(1) Higher organic loading, i.e. rates of treatment not limited by O_2 transfer.

(2) Minimal need for biological nutrients (N and P) and for further treatment.

(3) Lower energy requirement.

(4) Production of a useful by-product (CH_4) which has a low heat value compared to natural gas.

d. The disadvantages are as follows:

(1) Digesters must be heated to 85-90°F for optimum operation.

(2) Molecular oxygen is toxic to the system and must be excluded.

(3) Fundamental knowledge concerning the process is sparce.

(4) Highly skilled operation is required.

(5) Anaerobic digesters are easily upset by unusual conditions and are slow to recover.

(6) Recycled supernatant liquor tends to "shock" wastewater treatment facilities.

(7) The fact that a closed vessel is required complicates the inevitable cleaning necessary.

(8) The recovered gas, while useful, increases initial costs because of the necessity of providing explosion-proof appurtenant equipment.

(9) Digested sludge tends to be high in alkalinity. Where vacuum filtration preceded by chemical coagulation with the usual inorganic chemicals is practiced, increased chemical costs are inevitable.

7-109. Input Data.

a. Sludge production, lb/day.

(1) Primary.

(2) Secondary.

b. Volatile solids in raw sludge, percent.

c. Solids content in raw sludge, percent.

(1) Primary.

(2) Secondary.

d. Volatile solids destroyed during digestion, percent (≈40-60 percent).

e. Fixed solids produced from destruction of volatile solids, percent ($\approx 0.25(X_v)$ destroyed).

f. Solids concentration in digester, percent ($\approx$3-7 percent).

7-110. Design Parameters.

a. Desired digester temperature, °F.

b. Temperature of fresh sludge, °F.

c. Digestion time, days.

d. Gas production per pound of volatile solids destroyed, ft^3/lb ($\approx$12-18).

e. Heat value of gas produced, BTU/ft^3 ($\approx$640).

7-111. Design Procedure.

a. Calculate total volume of raw sludge to digester.

$$V_f = \frac{SP(100)}{(\%\ \text{solids})(62.4)(\text{specific gravity})}$$

where

V_f = volume of raw sludge to digester, ft^3/day

SP = sludge produced, lb/day

b. Calculate total quantity of solids accumulated after digestion.

$$S_{ac} = SP - SP(\%\ \text{volatile})(\%\ \text{VS destroyed})(0.75)(10^{-4})$$

where

S_{ac} = solids accumulated, lb/day

SP = sludge produced, lb/day

c. Calculate total volume of digested sludge; assume solids concentration in digester.

$$V_d = \frac{S_{ac}(100)}{(\%\ \text{solids})(62.4)(\text{specific gravity})}$$

where

V_d = volume of digested sludge, ft^3/day

S_{ac} = solids accumulated, lb/day

d. Select the detention time for destruction of volatile solids at a temperature of 95°F (fig. 7-18).

e. Calculate the average volume in the digester.

$$V_{avg} = \frac{V_f + V_d}{2}$$

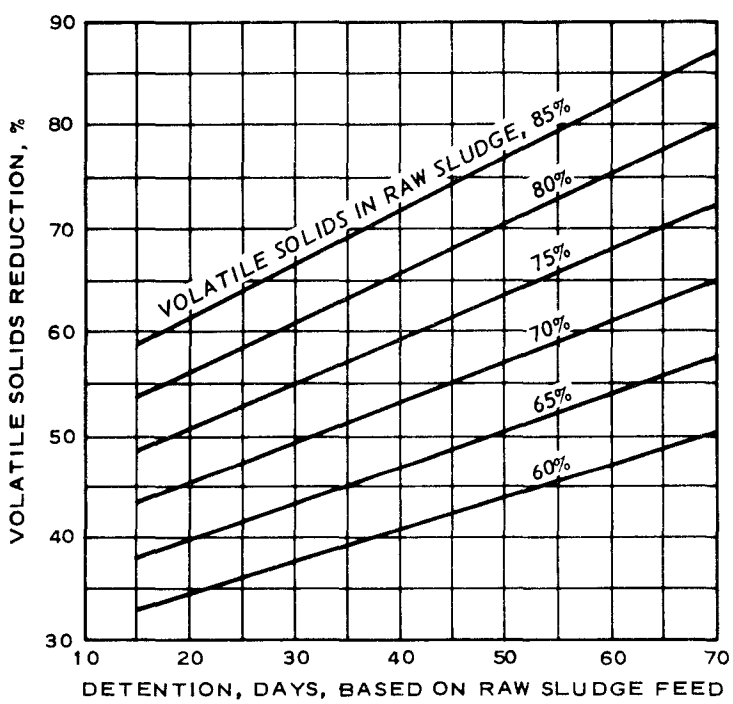

Figure 7-18. Reduction in volatile solids in raw sludge, for detentions from 15 to 70 days, T = 85 to 95°F.

where

V_{avg} = average volume in digester, ft^3/day

V_f = volume of fresh sludge added, ft^3/day

V_d = volume of accumulated sludge after digestion, ft^3/day

f. Calculate volume of digester.

$$V = V_{avg}(t_d)$$

where

V = volume in digester, ft^3

V_{avg} = average volume in digester, ft^3/day

t_d = digestion time, days

g. Calculate heat requirements.

(1) Heat supplied must be sufficient to raise the temperature of the incoming sludge to 95°F.

$$Q_s = (SP/P_s) \times (C) \times (T_d - T_s)(1/24)(100)$$

where

Q_s = BTU/hr required

SP = sludge added per day, lb

P_s = solids in fresh sludge, percent

C = 1.0 BTU/ft^2/day/°F

T_d = temperature of sludge in digester = 95°F

T_s = temperature of incoming sludge, °F

(2) Heat losses are as follows.

(a) Heat loss through the walls of digester.

$$Q_w = UA(T_2 - T_1)$$

where

Q_w = heat loss, BTU/hr

U = heat loss coefficient, BTU/hr/ft^2/°F ($\approx$0.18)

A = surface area involved, ft^2

T_2 = temperature within digester, °F

T_1 = average temperature of coldest 2 weeks of a given year, °F

(b) Heat losses through the floor.

$$Q_f = UA(T_2 - T_1)$$

(c) Heat losses through the digester cover.

$$Q_c = UA(T_2 - T_1)$$

Heat requirements = (1 + 2) BTU/hr.

h. Calculate daily gas production. Assume volume of gas produced per pound of volatile solids destroyed (12-18 ft^3/lb).

$$DGP = (SP)(\%\ volatile)(\%\ destroyed)(10^{-4})(ft^3/lb\ gas\ production)$$

where

DGP = daily gas produced, ft^3/day

SP = sludge produced, lb/day

i. Calculate daily gas requirement. Assume heat value of gas: 600 BTU/ft^3 for digester gas; 1000 BTU/ft^3 for natural gas.

$$DGR = \frac{\text{heat requirement (BTU/hr)}}{\text{heat value of gas (BTU/ft}^3\text{)}}$$

where DGR = daily gas requirement, ft^3/hr

7-112. Output Data.

a. VS destroyed, percent

b. Solids concentration in digester, percent.

c. Raw sludge temperature, °F.

d. Digester temperature, °F.

e. Detention time, days.

f. Volume, ft^3.

g. Gas produced, ft^3/day.

h. Heat requirement, ft^3/hr.

i. Digester gas requirement, ft^3/hr.

7-113. Example Calculations.

a. Calculate total volume of raw sludge to digester.

$$V_f = \frac{SP(100)}{(\%\ \text{solids})(62.4)\text{specific gravity}}$$

where

V_f = volume of sludge, ft^3/day

SP = sludge produced, 2191 lb/day

% solids = 1 percent

Specific gravity = 1.05

$$V_f = \frac{2191(100)}{1(62.4)1.05}$$

$$\underline{V_f = 3344 \text{ ft}^3/\text{day}}$$

b. Calculate total volume of solids accumulated after digestion.

$$S_{ac} = SP - SP(\%\text{ volatile})(\%\text{ VS destroyed})0.75 \times 10^{-4}$$

where

S_{ac} = solids accumulated, lb/day

SP = solids produced, 2191 lb/day

% volatile = 80

% VS destroyed = 60

$$S_{ac} = 2191 - 2191(80)(60)(0.75 \times 10^{-4})$$

$$\underline{S_{ac} = 1402 \text{ lb/day}}$$

c. Calculate total volume of digested sludge.

$$V_d = \frac{S_{ac}(100)}{\%\text{ solids}(62.4)\text{specific gravity}}$$

where

V_d = volume of digested sludge, ft^3/day

S_{ac} = solids accumulated, 1402 lb/day

% solids = 5 percent

specific gravity = 1.05

$$V_d = \frac{1402(100)}{5(62.4)1.05}$$

$$\underline{V_d = 428 \text{ ft}^3/\text{day}}$$

d. Select the detention time for destruction of volatile solids at a temperature of 95°F. Detention time = 28 days = t_d .

e. Calculate the average volume in the digester.

$$V_{avg} = \frac{V_f + V_d}{2}$$

where

V_{avg} = average volume, ft^3/day

V_f = volume of raw sludge to digester, 3344 ft^3/day

V_d = volume of digested sludge, 428 ft^3/day

$$V_{avg} = \frac{3344 + 428}{2}$$

$$\underline{V_{avg} = 1886 \text{ ft}^3/\text{day}}$$

f. Calculate volume of digester.

$$V = V_{avg}(t_d)$$

where

V = volume of digester, ft^3

V_{avg} = daily volume in digester, 1886 ft^3/day

t_d = detention time, 28 days

$$V = 1886(28)$$

$$\underline{V = 52{,}808 \text{ ft}^3}$$

g. Calculate heat requirement.

(1) Heat required

$$Q_s = \left(\frac{SP}{P_s}\right)(C)\ \frac{(T_d - T_s)}{24}\ (100)$$

where

Q_s = BTU/hr required

SP = sludge added per day, 2191 lb

P_s = solids in fresh sludge, 1%

C = constant, 1.0 BTU/ft^2/day/°F

T_d = temperature of sludge in digester, 95°F

T_s = temperature of incoming sludge, 70°F

$$Q_s = \left(\frac{2191}{1}\right)(1.0)\ \frac{(95 - 70)}{24}\ (100)$$

$$\underline{Q_s = 228{,}230 \text{ BTU/hr}}$$

(2) Calculate heat losses.

(a) Losses through walls

$$Q_w = UA(T_2 - T_1)$$

where

Q_w = heat loss through walls, BTU/hr

U = heat loss coefficient, 0.18 BTU/hr/ft^2/°F

A = area of walls, 4524 ft^2

T_2 = temperature in digester, 95°F

T_1 = average temperature of coldest 2 weeks of the year, 10°F

$$Q_w = (0.18)4524(95 - 10)$$

$$\underline{Q_w = 69{,}217 \text{ BTU/hr}}$$

(b) Losses through floor.

$$Q_f = U(A_f)(T_2 - T_1)$$

where

A_f = area of floor, 1810 ft^2

$$Q_f = (0.18)(1810)(95 - 10)$$

$$\underline{Q_f = 27{,}693 \text{ BTU/hr}}$$

(c) Losses through cover.

$$Q_c = U(A_c)(T_2 - T_1)$$

where

A_c = area of cover, 1810 ft^2

$$Q_c = (0.18)(1810)(95 - 10)$$

$$\underline{Q_c = 27{,}693 \text{ BTU/hr}}$$

(d) Total heat losses.

$$Q_t = Q_w + Q_f + Q_c$$

where

Q_t = total heat losses, BTU/hr

$$Q_t = 69{,}217 + 27{,}693 + 27{,}686$$

$$\underline{Q_t = 124{,}603 \text{ BTU/hr}}$$

Total heat requirement = $Q_t + Q_s$

$$= 124{,}589 + 228{,}230$$

<u>Total heat requirement = 352,819 BTU/hr</u>

h. Calculate daily gas production.

Assume volume of gas produced per pound of volatile solids destroyed = 15 ft^3/lb.

$$DGP = (SP)(\%\ \text{volatile})(\%\ \text{destroyed})15 \times 10^{-4}\ ft^3/lb$$

where

DGP = daily gas produced, ft^3/day

SP = sludge produced, 2191 lb/day

% volatile = 80%

% destroyed = 60%

$$DGP = 2191(80)(60)(15 \times 10^{-4})$$

$$\underline{DGP = 15{,}775\ ft^3/day}$$

At 600 BTU/ft^3

DGP = 15,775(600)

DGP = 9,465,000

i. Calculate daily gas requirement.

$$DGR = \frac{\text{heat requirement (BTU/hr)}}{\text{heat value of gas (BTU/ft}^3}$$

where

DGR = daily gas requirement, ft^2/hr

$$DGR = \frac{352{,}819}{600}$$

$$\underline{DGR = 588\ ft^3/hr}$$

where DGP or daily gas produced =

$$\frac{15{,}775\ ft^3/day}{24\ hr/day}$$

$$\underline{DGP = 657\ ft^3/hr}$$

There is sufficient gas produced to heat the digester.

7-114. Cost Data. Appropriate cost data and economic evaluation may be found in Chapter 8.

7-115. Bibliography.

a. American Society of Civil Engineers and the Water Pollution Control Federation, "Sewage Treatment Plant Design," Manual of Practice No. 8, 1959, 1961, 1967, 1968, Water Pollution Control Federation, Washington, D. C.

b. Burd, R. S., "A Study of Sludge Handling and Disposal," Publication WP-20-4, May 1968, Federal Water Pollution Control Administration, Washington, D. C.

c. College of Engineering, Oklahoma State University, "Aerobic Digestion of Organic Wastes," Report No. 17070DAU, Dec 1971, U. S. Environmental Protection Agency, Washington, D. C.

d. Dick, R. I., "Sludge Treatment, Disposal, and Utilization Literature Review, Journal, Water Pollution Control Federation, Vol 43, Jun 1971, pp 1134-1149.

e. Drier, D. E., "Aerobic Digestion of Solids," Proceedings of 18th Purdue Industrial Waste Conference, 1963, Purdue University, Lafayette, Ind.

f. Drier, D. E., "Aerobic Digestion of Sludge," paper presented at Sanitary Engineering Institute, Mar 1965, University of Wisconsin, Madison, Wis.

g. Eckenfelder, W. W., Jr., Water Quality Engineering for Practicing Engineers, Barnes and Nobel, New York, 1970.

h. Great Lakes-Upper Mississippi River Board of State Sanitary Engineers, "Recommended Standards for Sewage Works (Ten States Standards)," 1971, Health Education Service, Albany, N. Y.

i. Jaworski, N., Lawton, G. W., and Rohlich, G. A., "Aerobic Sludge Digestion," International Journal of Air and Water Pollution, Vol 4, 1961, pp 106-114.

j. Loher, R. C., "Aerobic Digestion-Factors Affecting Design," 9th Great Plains Sewage Works Design Conference, Mar 1965.

k. Lynam, B., McDonnell, G., and Krup, M., "Start-up and Operation of Two New High-Rate Digestion Systems," Journal, Water Pollution Control Federation, Vol 39, Apr 1967, pp 518-535.

l. Malina, F. J., "Aerobic Sludge Stabilization," Manual of Treatment Processes, Vol 1, Environmental Science Services, Inc., Briarcliff Manor, New York, 1969.

m. McKinney, R. E. and O'Brien, W. J., "Activated Sludge - Basic Design Concepts," Journal, Water Pollution Control Federation, Vol 40, Nov 1968, pp 1831-1843.

n. Metcalf and Eddy, Inc., Wastewater Engineering; Collection, Treatment, and Disposal, McGraw-Hill, New York, 1972.

o. Pohland, F. G. and Kang, J. J., "Anaerobic Processes," Journal, Water Pollution Control Federation, Vol 46, No. 6, 1971, pp 1129-1133.

p. Sawyer, C. N. and Grubling, J. S., "Fundamental Considerations in High Rate Digestion," Journal, Sanitary Engineering Division, American Society of Civil Engineers, Vol 86, Mar 1960, pp 49-63.

q. Shindala, A. and Bryme, W. J., "Anaerobic Digestion of Thickened Sludge," Public Works, Vol 101, Feb 1970, pp 73-76.

r. Shindala, A., Dust, J. V., and Champion, A. L., "Accelerated Digestion of Concentrated Sludge," Water and Sewage Works, Vol 117, Sep 1970, pp 329-332.

(next page is 7-307)

Section XVI. STABILIZATION PONDS

7-116. Background.

a. General. Waste stabilization ponds have been used extensively for the treatment of organic and industrial wastes where sufficient land area is available. Other reasons for its wide usage include fluctuating organic loadings, shortage of trained operators for other, more complex systems, and monetary currency restrictions. Ponds may be used for a variety of different applications. Usually stabilization ponds are designed to receive untreated waste; however, they may also be designed to treat primary or secondary effluents, excess activated sludge, or even vault wastes. Multiple stabilization ponds may be designed for series or parallel use. Pretreatment by waste stabilization ponds is used primarily to reduce BOD loadings and to reduce the concentration of disease-causing agents (para 7-123f). For this manual, waste stabilization ponds will be considered as three types: aerobic, facultative, and anaerobic.

b. Aerobic. An aerobic stabilization pond is one in which aerobic bacteria and algae coexist in an aerobic environment (fig. 7-19). The

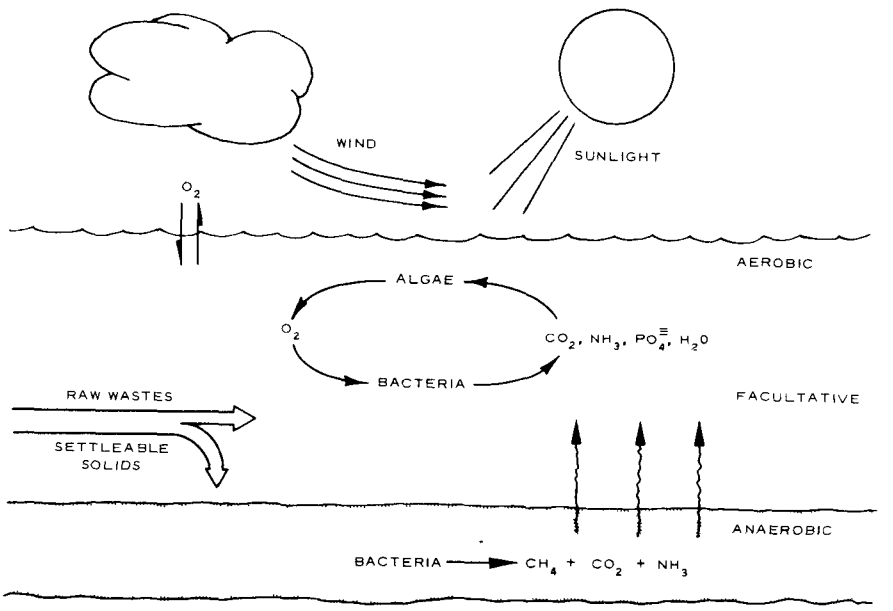

From Clark and Viessman, 1965

Figure 7-19. Schematic diagram of facultative oxidation pond symbiosis between bacteria and algae.

aerobic stabilization pond depends on algae photosynthesis and atmospheric reaeration to supply the oxygen used by bacteria to stabilize the organic matter. Because algae photosynthesis is directly dependent upon sunlight, pond operating depths are normally limited to 3 feet. To maintain aerobic conditions in the settled materials and good oxygen distribution, the contents of the pond should be mixed periodically. Soluble BOD_5 removal in aerobic ponds is high (up to 95 percent); however, separation of the algae from the effluent is necessary to obtain a true BOD_5 removal. The use of aerobic stabilization ponds should be avoided where the waste to be treated contains materials toxic to algae growth.

c. Facultative. A facultative stabilization pond is characterized by an upper aerobic layer or zone and an anaerobic bottom. It is possible to find aerobic, facultative, and anaerobic organisms in this type of pond. Variation of oxygen content in the aerobic zone is diurnal, increasing during the daylight hours and decreasing during the night. The settled sludge undergoes anaerobic decomposition, thus releasing methane and other gases. In turn, the aerobic organisms utilize these gases; therefore, maintaining an aerobic upper zone is essential in minimizing odor problems. Normal operating depths range from 3 to 8 ft.

d. Anaerobic. Anaerobic stabilization ponds are essentially unheated digesters. Loadings induce anaerobic conditions throughout the pond and the conversion of organic matter is the same as in anaerobic digestion. The acid-forming bacteria convert the organic matter to organic acids which are further converted to methane gas by the methane formers. Pond depths in the range of 8 to 15 ft are used to maintain anaerobic conditions and to provide maximum heat retention.

7-117. Input Data.

a. Wastewater flow.

(1) Average daily, mgd.

(2) Peak hourly, mgd.

b. Wastewater strength, BOD_5 mg/ℓ.

c. Other characterizations.

(1) pH.

(2) Temperature (maximum and minimum).

7-118. Design Parameters. (See Table 7-3).

7-119. Design Procedure. The biochemical relationships existing in waste stabilization ponds are very complex. Several attempts have been made to develop a completely analytical rationale for the design of ponds. However, the complexity has resulted in a design procedure based on a load per unit area concept. Experience has shown this to be acceptable design practice, one often specified by state regulatory agencies. The following procedure is applicable to all three types of ponds: aerobic, facultative, and anaerobic.

a. Calculate BOD_5 present in the waste.

$$BOD_5 = (Q_{avg}) \left(BOD_5\right)_i (8.34)$$

where

BOD_5 = BOD_5 in the waste, lb/day

Q_{avg} = average flow, mgd

$\left(BOD_5\right)_i$ = influent BOD_5, mg/ℓ

b. From the design parameters given in Table 7-3, select a BOD_5 loading.

c. Calculate the surface area required based on the lb/day of BOD_5 and BOD_5 loading.

$$SA = \frac{BOD_5}{BOD_5 \text{ loading}}$$

where

SA = surface area, acres

BOD_5 loading = lb/acre/day

d. Select a pond operating depth from Table 7-3 and calculate the pond volume.

$$V = (SA)(D)(0.32585)$$

where

V = pond volume, million gal

SA = surface area, acres

D = pond depth, ft

0.32585 = conversion factor, acre-ft to mg

e. Check on the detention time.

$$t = \frac{V}{Q_{avg}}$$

where

t = detention time, days

V = volume, million gal

Q_{avg} = average flow, mgd

Check t against the range of values given in Table 7-3.

f. Since design equations are not available, the effluent soluble BOD_5 is estimated according to the following.

$$\left(BOD_5\right)_{eff} = \left[\left(1 - \%\right)\left(BOD_5\right)_r\right]\left(BOD_5\right)_i$$

where

$\left(BOD_5\right)_{eff}$ = effluent BOD_5, mg/ℓ

$\left(BOD_5\right)_r$ = decimal BOD_5 conversion (from Table 7-3)

$\left(BOD_5\right)_i$ = influent BOD_5, mg/ℓ

7-120. Output Data.

a. BOD loading, lb/acre/day.

b. Surface area, acres.

c. Depth, ft.

d. Volume, acre-ft.

e. Detention time, days.

7-121. Example Calculations (Facultative).

a. Calculate BOD_5 present in waste.

$$BOD_5 = Q_{avg}\left(BOD_5\right)_i 8.34$$

where

BOD_5 = BOD_5 in waste, lb/day

Q_{avg} = average flow, 1.0 mgd

$\left(BOD_5\right)_i$ = influent BOD_5, 200 mg/ℓ

$$BOD_5 = 1.0(200)8.34$$

$$\underline{BOD_5 = 1668 \text{ lb/day}}$$

b. Select a BOD_5 loading = 50 lb/acre/day.

c. Calculate surface area.

$$SA = \frac{BOD_5}{BOD_5 \text{ loading}}$$

where

SA = surface area, acres

BOD_5 = BOD_5 in waste, 1668 lb/day

BOD_5 loading = 50 lb/acre/day

$$SA = \frac{1668}{50}$$

$$\underline{SA = 33.4 \text{ acres}}$$

d. Select a pond operating depth and calculate the pond volume.

$$V = SA(D)0.32585$$

where

V = pond volume, million gal

SA = surface area, 33.4 acres

D = pond depth, 6 ft

0.32585 = converts acre-ft to million gal

$$V = 33.4(6)0.32585$$

$$\underline{V = 65.3 \text{ million gal}}$$

e. Check detention time.

$$t = \frac{V}{Q_{avg}}$$

where

t = detention time, days

V = volume of pond, 65.3 mg

Q_{avg} = average flow, 1.0 mgd

$$t = \frac{65.3}{1.0}$$

$$\underline{t = 65.3 \text{ days}}$$

f. Determine effluent BOD_5.

$$\left(BOD_5\right)_{eff} = \left[1 - \%\left(BOD_5\right)_r\right]\left(BOD_5\right)_i$$

where

$\left(BOD_5\right)_{eff}$ = effluent BOD_5, mg/ℓ

$\%\left(BOD_5\right)_r$ = decimal BOD_5 conversion, 0.65

$\left(BOD_5\right)_i$ = influent BOD_5, 200 mg/ℓ

$$\left(BOD_5\right)_{eff} = (1 - 0.65)200$$

$$\underline{\left(BOD_5\right)_{eff} = 70 \text{ mg/}\ell}$$

7-122. Cost Data. Appropriate cost data and economic evaluation may be found in Chapter 8.

7-123. Bibliography.

a. Barsom, G., "Lagoon Performance and the State of Lagoon Technology," Report No. R2-73-144, Jun 1973, U. S. Environmental Protection Agency, Washington, D. C.

b. City of Austin, Texas, "Design Guides for Biological Wastewater Treatment Processes," Report No. 11010ESQ, Aug 1971, U. S. Environmental Protection Agency, Washington, D. C.

c. Clark, J. W. and Viessman, W., Jr., Water Supply and Pollution Control, International Textbook Co., Scranton, 1966.

d. Eckenfelder, W. W., Jr., and Ford, D. L., Water Pollution Control, Pemberton Press, New York, 1970.

e. Gloyna, E. F., "Basis for Waste Stabilization Pond Design," Advances in Water Quality Improvements - Physical and Chemical Processes, E. F. Gloyna and W. W. Eckenfelder, Jr., ed., University of Texas Press, Austin, 1970.

f. Gloyna, E. F., "Waste Stabilization Ponds," World Health Organization, Geneva, Switzerland, 1971.

g. Great Lakes-Upper Mississippi River Board of State Sanitary Engineers, "Recommended Standards for Sewage Works (Ten States Standards)," 1971, Health Education Service, Albany, N. Y.

h. Herman, E. R. and Gloyna, E. F., "Waste Stabilization Ponds, III, Formulation of Design Equations," Sewage and Industrial Wastes, Vol 30, No. 8, Aug 1958, pp 963-975.

i. Marais, G. V. R., "New Factors in the Design, Operation and Performance of Waste Stabilization Ponds with Special Reference to Health," Expert Committee Meeting on Environmental Change and Resulting Impact on Health Organization, 1964.

j. McKinney, R. E., "Overloaded Oxidation Ponds - Two Case Studies," Journal, Water Pollution Control Federation, Vol 40, Jan 1968, pp 49-56.

k. Metcalf and Eddy, Inc., Wastewater Engineering; Collection, Treatment, and Disposal, McGraw-Hill, New York, 1972.

l. Oswald, W. J., "Rational Design of Waste Ponds," Proceedings, Symposium on Waste Treatment by Oxidation Ponds, Nagpur, India, 1963.

m. Oswald, W. J., "Quality Management by Engineered Ponds," Engineering Management of Water Quality, McGraw-Hill, New York, 1968.

n. University of Kansas, "Waste Treatment Lagoons," 2d International Conference on Lagoon Technology, 1970, Lawrence, Kans.

Table 7-3. Design Parameters for Stabilization Ponds

Parameter	Type of Pond			
	Aerobic[a]	Facultative	Facultative	Anaerobic
Flow regime	Intermittently mixed	--	Mixed surface layer	--
Pond size, acres	<10 multiples	2 to 10 multiples	2 to 10 multiples	0.5 to 2.0 multiples
Operation[b]	Series or parallel	Series or parallel	Series or parallel	Series
Detention time, days[b]	10 to 40	7 to 30	7 to 20	20 to 50
Depth, ft	3 to 4	3 to 6	3 to 8	8 to 15
pH	6.5 to 10.5	6.5 to 9.0	6.5 to 8.5	6.8 to 7.2
Temperature range, °C	0 to 40	0 to 50	0 to 50	6 to 50
Optimum temperature, °C	20	20	20	30
BOD_5 loading, lb/acre/day[c]	60 to 120[d]	15 to 50	30 to 100	200 to 500
BOD_5 conversion	60 to 70	60 to 70	60 to 70	50 to 70
Principal conversion products	Algae, CO_2, bacterial cell tissue	Algae, CO_2, CH_4, bacterial cell tissue	CO_2, CH_4, bacterial cell tissue	CO_2, CH_4, bacterial cell tissue
Algal concentration, mg/ℓ	80 to 200	40 to 160	10 to 40	--
Effluent suspended solids, mg/ℓ[e]	140 to 340	160 to 400	110 to 340	80 to 160

(a) Conventional aerobic ponds designed to maximize the amount of oxygen produced rather than the amount of algae produced.

(b) Depends on climatic conditions.

(c) Typical values (much higher values have been applied at various loadings). Loading values are often specified by state control agencies.

(d) Some states limit this figure to 50 or less.

(e) Includes algae, microorganisms, and residual influent suspended solids. Values are based on an influent soluble BOD_6 of 200 mg/ℓ and, with the exception of the aerobic ponds, an influent suspended-solids concentration of 200 mg/ℓ.

From Metcalf and Eddy, 1972

CHAPTER 8

COST DATA AND ECONOMIC ANALYSIS

Section I. INTRODUCTION

8-1. Economic Analysis.

a. As noted previously, cost data are available on the physical-chemical-biological unit processes which allow the design engineer to estimate the average capital and operating and maintenance costs for each process and for a specific design train. Many alternative treatment processes and treatment systems can be screened according to cost-effectiveness analysis procedures with these cost estimates. Those systems which meet discharge requirements and are most cost-effective can be examined in depth with more exact cost estimates reflecting local variation.

b. The cost estimates for the unit processes were obtained from the most recent sources available. These sources are noted in each unit process cost section and are referenced at the end of each process. Some unit processes have no cost data, hence the design team must use its own judgement in evaluating the costs. No overall cost estimates were available for these unit processes. As revised cost estimates for known cost information are made available they will be furnished to the user in the form of changes. At present, the designers must update the cost information according to the year it was published. In this manner all processes may be judged on the same basis or for the costs for the same year. At present all cost data included in this manual have as their base the year 1971.

c. The cost estimates are broken down into two areas:(1) capital costs and (2) operating and maintenance costs. Capital cost reflects all initial construction costs for each unit process. Estimated costs of engineering, legal, fiscal, and administrative services, land, and interest during construction are not included in the capital cost estimate. These costs must be estimated separately and added to the treatment process costs to reflect total system costs. The operating and maintenance costs are all labor, materials, and supply costs necessary to operate the processes after construction.

d. Most of the cost estimates were obtained by a statistical regression analysis of the cost data from numerous treatment facilities. Cost equations were formed which related an appropriate physical

parameter to the cost. These equations give estimates of the capital costs, number of man-hours of labor for operation per year, number of man-hours of labor for maintenance per year, and a materials and supply cost per year. The physical parameter inputs necessary for the design of the unit process are used in the cost equations. The appropriate parameter for each cost equation is noted in each cost section. The man-hours of labor required per year for both operation and maintenance must be multiplied by the average labor wage rate to obtain an estimate of operating and maintenance costs.

e. After the design engineer performs the initial calculation outlined herein, estimates of the capital and operating and maintenance costs for each unit process in the treatment train will be available. Environmental Protection Agency (EPA) guidelines for wastewater treatment plants state that a cost-effectiveness analysis must be performed on alternative wastewater treatment systems. Before a comparison of treatment systems with different capital and operation and maintenance costs can be made, an economic analysis recognizing the time value of money is required. The present worth method or the equivalent annual cost method may be used in this analysis. The Federal discount (interest) rate will be used for evaluation of water and related land resources projects as published in the Federal Register.

f. The present worth method determines the sum which represents capital cost and the present monetary value of the time stream of operation and maintenance costs for a given interest rate. On the other hand, the equivalent annual cost method amortizes the capital expenditures at a given interest rate over the design life of the project. This cost is added to the yearly operation and maintenance costs to obtain an equivalent uniform yearly cost for the plant. Once a method is chosen the design engineer uses the capital operating and maintenance costs calculated for each alternative wastewater treatment system as input into the analysis. Both methods give a true indication of the total project costs for differing alternative wastewater treatment systems. A discussion of both methods as they relate to cost effectiveness analysis is provided by the EPA.

g. As part of the overall selection process, the design engineer will want to consider as many viable treatment alternatives as possible. However, the number of possible combinations of treatment processes which make up a treatment system prevent manual consideration of all possible systems. A way to screen alternatives according to their ability to meet effluent standards and their cost is needed. The computerized design process outlined in Part 3 gives the design engineer

this capability. For any number of treatment system alternatives, the computerized design process will screen alternatives to determine which meet desired effluent criteria and which are the most cost-effective in relation to monetary costs. The entire process for the manual calculation of unit process costs and economic analysis is provided by the computer. The alternative treatment trains are presently compared by the equivalent annual cost method in the computerized design process. When used to examine all the feasible wastewater treatment plant designs in the initial planning stages of a wastewater study the computerized design process is a powerful tool.

(next page is 8-5)

Section II. PHYSICAL UNIT PROCESSES

8-2. Grit Removal.

a. Most available data on cost of wastewater treatment facilities combine the cost of screening, grit removal, and flow measuring devices into one cost, referred to as "preliminary treatment." In this manual, the cost of grit removal is combined with the cost of screening as well as flow measuring devices. The following cost formulations are those developed by Patterson and Banker and formulated by Eilers and Smith.

b. Cost formulations for preliminary treatment are:

$$CC = 27{,}500X^{0.606}$$

$$OHR = 530X^{0.684}$$

$$XHR = 301X^{0.604}$$

$$SU = 1{,}060X^{0.614}$$

where

CC = capital cost, dollars

$X = Q_{avg}$ = average daily flow, mgd

OHR = annual operating labor, man-hours

XHR = annual maintenance labor, man-hours

SU = materials and supplies cost

8-3. Screening.

a. Most available data on costs of wastewater treatment facilities combine the cost of screening devices, comminutors, and grit removal and flow measuring equipment under one heading usually referred to as "preliminary treatment." No separate cost data are currently available. Equipment manufacturers may be consulted with regard to capital and operating costs of screening devices.

b. In this manual, the cost of screening is included, along with costs for grit removal and flow measuring equipment, and is referred to as "preliminary treatment." Cost equations for screening are the same as those listed under grit removal.

8-4. Comminution.

a. Since the size of the comminutor is determined on the basis of wastewater flow, cost formulations for the comminutor are also based on wastewater flow. Capital cost of equipment only, not including special housing or concrete structures, has been formulated as follows.

b. Cost formulations for comminution are:

$$CC = 580X^{0.14}$$

where

CC = capital cost, dollars

$X = Q_{avg}$ = average daily flow, mgd

c. Cost data available for wastewater treatment facilities combine the operating and maintenance costs of screening, comminution, and grit removal and flow measuring devices under one item normally referred to as "preliminary treatment." Currently, no data are available on operation and maintenance costs of comminuting devices.

8-5. Equalization. Cost formulations for equalization basins are as follows:

$$CC = 82X^{0.64}(1000)$$

$$OHR = 0$$

$$XHR = 0$$

$$SU = 3650(0.134)B(0.02) + 0.035\ CC$$

where

CC = capital cost, dollars

X = V = volume of tank, million gal

SU = materials and supply cost, dollars

B = hp = horsepower required

8-6. Flotation. Cost formulations for flotation tanks are as follows:

$$CC = 17{,}432X^{0.5773}$$

$$OHR = 0$$

$$XHR = 0$$

$$SU = 0.02\ CC$$

where

CC = capital cost dollars

X = V = volume of flotation tank, million gal

SU = materials and supply costs, dollars

8-7. Thickening (gravity). Cost formulations for gravity thickening units are as follows:

$$CC = 36{,}373X^{0.468}$$

$$OHR = 4{,}321X^{0.451}$$

$$XHR = 161X^{0.602}$$

$$SU = 484X^{0.416}$$

where

CC = capital cost, dollars

X = TSA = total surface area, sq ft

OHR = annual operating labor, man-hours

XHR = annual maintenance labor, man-hours

SU = materials and supply cost, dollars

8-8. Sedimentation (Primary Clarifier). Cost formulations for primary clarifiers are as follows:

$$CC = 26{,}120X^{0.764}$$

$$OHR = 340X^{0.53}$$

$$XHR = 177X^{0.52}$$

$$SU = 293X^{0.741}$$

where

CC = capital cost, dollars

$X = \frac{SA}{1000}$ = surface area, sq ft

OHR = annual operating labor, man-hours

XHR = annual maintenance labor, man-hours

SU = materials and supply cost, dollars

8-9. Sedimentation (Secondary Clarifier). Cost formulations for secondary clarifiers are as follows:

$$CC = 11{,}680X^{0.6523}$$

$$OHR = 530X^{0.684}$$

$$XHR = 301X^{0.604}$$

$$SU = 1{,}060X^{0.614}$$

where

CC = capital cost, dollars

OHR = annual operating labor, man-hours

XHR = annual maintenance labor, man-hours

$SU = \frac{SA}{1000}$ = surface area, sq ft

8-10. Filtration. Cost formulations for filtration units are as follows:

$$CC = 100{,}000X^{0.6519}$$

$$OHR = 0$$

$$XHR = 0$$

$$SU = 365(45)X^{0.6373}$$

where

CC = capital cost, dollars

$X = Q_{avg}$ = average flow, mgd

$SU = Q_{avg}$ = average flow, mgd

8-11. Vacuum Filtration. Cost formulations for vacuum filtration units are as follows:

$$CC = 3816A^{0.7313}$$

$$OHR = 30.5TPY^{0.6463}$$

$$XHR = 4.15TPY^{0.668}$$

$$SU = 44.5TPY^{0.7139} + 30.3TPY^{0.8365}$$

where

CC = capital cost, dollars

A = filter area, sq ft

OHR = annual operating labor, man-hours

$TPY = \frac{B(C)8.34(365)}{100(2000)}$

B = sludge volume, gpd

C = solids, percent

XHR = annual maintenance labor, man-hours

SU = materials and supply cost, dollars

8-12. Centrifugation. Cost formulations for centrifugation units are as follows:

$$CC = 32{,}927A^{0.5271}$$

$$OHR = 143B^{0.4868}$$

$$XHR = 8.45B^{0.594}$$

$$SU = 17.3B^{0.884} + 51.7B^{0.713} + \frac{0.02C(24)365}{1.341}$$

where

CC = capital cost, dollars

$$A = \frac{\text{sludge flow (24)}}{\text{hours per day of operation}}$$

OHR = annual operating labor, man-hours

$$B = \frac{\text{sludge volume (\% solids) } 8.34(365)}{100(2000)}$$

XHR = annual maintenance labor, man-hours

SU = materials and supply cost, dollars

C = total horsepower required, hp

8-13. Microscreening. Cost formulations for microscreening units are as follows:

$$CC = 0.03146X^{0.8893}(1{,}000{,}000)$$

$$OHR = 0$$

$$XHR = 0$$

$$SU = 6.0(365)X^{0.9604}$$

where

CC = capital cost, dollars

$X = Q_{avg}$ = average flow, mgd

SU = materials and supply cost, dollars

8-14. Drying Beds. Cost formulations for drying beds are as follows:

$$CC = 4244X^{0.6547}$$

$$OHR = 17.1B^{0.7395}$$

$$XHR = 2.93B^{0.913}$$

$$SU = 2.68B^{0.9449}$$

where

CC = capital cost, dollars

X = SA = surface area, sq ft

OHR = annual operating labor, man-hours

B = TPY = tons sludge per year

XHR = annual maintenance labor, man-hours

SU = materials and supply costs, dollars

8-15. Postaeration. Cost formulations for postaeration chambers equipped with mechanical or diffused aerators are as follows:

$$CC = 2,616.8X + 19,547.6$$

where

CC = capital cost, dollars

$X = Q_{max}$ = maximum flow, mgd

8-16. Cascade Aeration. No cost formulations are available, at present, for cascade aeration units.

8-17. Sludge Hauling and Land Filling. To be furnished.

8-18. Multiple Hearth Incineration. To be furnished.

8-19. Fluidized Bed Incineration. To be furnished.

Section III. CHEMICAL UNIT PROCESSES

8-20. Carbon Adsorption. Cost formulations for carbon adsorption units are as follows:

$$CC = 566{,}856 + 81{,}647X$$

$$OHR = 0$$

$$XHR = 1{,}440X$$

$$SU = \frac{0.9X}{0.00011245 + 0.00000014X}$$

where

CC = capital cost, dollars

$X = Q_{avg}$ = average daily flow, mgd

XHR = annual maintenance labor, man-hours

SU = materials and supply cost, dollars

8-21. Chemical Coagulation. Cost formulations for chemical coagulation units are as follows:

$$CC = 15{,}028X^{0.427}$$

$$OHR = 0$$

$$XHR = 0$$

$$SU = 27X^{0.599}$$

where

CC = capital cost, dollars

$$X = \frac{VFL}{7.48(1000)} = \frac{\text{volume of flocculator, gal}}{7.48(1000)}$$

SU = materials and supply cost, dollars

See Section 8-8 for cost of clarifier coagulation unit.

8-22. Ammonia Stripping. Cost formulations for both crosscurrent and countercurrent ammonia stripping towers are as follows:

$$CC = 0.095X^{0.9}(1,000,000)$$

$$OHR = 0$$

$$XHR = 0$$

$$SU = 48.4(365)X^{0.658}$$

where

CC = capital cost, dollar

$X = Q_{avg}$ = average flow, mgd

SU = materials and supply cost, dollars

8-23. Chlorination. Cost formulations for chlorine contact tanks are as follows:

$$CC = 6917X^{0.64} + 3.89B^{0.418}$$

$$OHR = 89.6TPY^{0.5484}$$

$$XHR = 7.57TPY^{0.801}$$

$$SU = 447TPY^{0.2794} + 273TPY^{0.88}$$

where

CC = capital cost, dollars

$X = \frac{VCT}{7.48(1000)} = \frac{\text{volume of contact tank, gal}}{7.48(1000)}$

B = CR = chlorine requirement, lb/day

OHR = annual operating labor, man-hours

$TPY = \frac{B(365)}{2000}$ = tons per year

XHR = annual maintenance labor, man-hours

SU = materials and supply cost, dollars

8-24. Ion Exchange. Cost formulations for both anionic and cationic exchange columns are as follows:

$$CC = 146{,}943X^{0.88}$$

$$OHR = 0$$

$$XHR = 0$$

$$SU = 3{,}371X^{0.72}$$

where

CC = capital cost, dollars

$X = Q_{avg}$ = average flow, mgd

SU = materials and supply cost, dollars

8-25. Neutralization. Cost formulations for neutralization units are as follows:

$$CC = 0.06X^{0.7}(1{,}000{,}000)$$

$$OHR = 0$$

$$XHR = 0$$

$$SU = 0$$

where

CC = capital cost, dollars

$X = Q_{avg}$ = average flow, mgd

8-26. Recarbonation: At present no cost data are available for recarbonation units. As costs are made available they will be included in this section.

8-27. Two-Stage Lime Treatment. At present, prices are available only for the first stage of a two-stage lime treatment unit. Cost formulations for this first stage unit are as follows:

$$CC = 294{,}457 + 30{,}075X$$

$$OHR = 0$$

$$XHR = 2{,}683X^{0.46}$$

$$SU = 1{,}824X^{0.65}$$

where

CC = capital cost, dollars

X = Q_{avg} = average flow, mgd

XHR = annual maintenance labor, man-hours

SU = materials and supply cost, dollars

Section IV. BIOLOGICAL UNIT PROCESSES

8-28. Trickling Filters. Cost formulations for trickling filters are as follows:

$$CC = 5877X^{0.729}$$

$$OHR = 57.9SA^{0.636}$$

$$XHR = 51.3SA^{0.562}$$

$$SU = 163.3SA^{0.465}$$

where

CC = capital cost, dollars

$$X = \frac{2\ Q_{avg}}{7.48(1000)} = \frac{2 \text{ average flow (mgd)}}{7.48(1000)}$$

OHR = annual operating labor, man-hours

XHR = annual maintenance labor, man-hours

SU = materials and supply cost, dollars

SA = surface area, sq ft

8-29. Plug Flow Activated Sludge. Cost formulations for plug flow activated sludge units are as follows:

$$CC = 5658X^{0.6627}$$

$$OHR = 0$$

$$XHR = 0$$

$$SU = 0$$

where

CC = capital cost, dollars

$$X = \frac{0.5\ Q_{avg}(1000)}{7.48} = \frac{0.5 \text{ (average flow) } 1000}{7.48}$$

8-30. Complete Mix Activated Sludge. Cost formulations for complete mix activated sludge units are as follows:

$$CC = 5658X^{0.6627}$$

$$OHR = 0$$

$$XHR = 0$$

$$SU = 0$$

where

CC = capital cost, dollars

$$X = \frac{Q_{avg}(1000)}{7.48} = \frac{\text{average flow (mgd)(1000)}}{7.48}$$

8-31. Step Aeration Activated Sludge. Cost formulations for step aeration sludge units are as follows:

$$CC = 5658X^{0.6627}$$

$$OHR = 0$$

$$XHR = 0$$

$$SU = 0$$

where

CC = capital cost, dollars

$$X = \frac{Q_{avg}(1000)}{7.48} = \frac{\text{average flow (mgd)1000}}{7.48}$$

8-32. Extended Aeration Activated Sludge. Cost formulations for extended aeration activated sludge are as follows:

$$CC = 5658X^{0.6627}$$

$$OHR = 0$$

$$XHR = 0$$

$$SU = 0$$

where

CC = capital cost, dollars

$$X = \frac{(1.5)Q_{avg}(1000)}{7.48} = \frac{1.5 \text{ average flow (mgd) } 1000}{7.48}$$

8-33. Modified or High-Rate Aeration Activated Sludge. Cost formulations for high-rate aeration activated sludge are as follows:

$$CC = 5658X^{0.6627}$$

$$OHR = 0$$

$$XHR = 0$$

$$SU = 0$$

where

CC = capital cost, dollars

$$X = \frac{(0.25)Q_{avg}(1000)}{7.48} = \frac{0.25 \text{ average flow (mgd) } 1000}{7.48}$$

8-34. Contact Stabilization Activated Sludge. Cost formulations for contact stabilization activated sludge units are as follows:

$$CC = 5658X^{0.6627}$$

$$OHR = 0$$

$$XHR = 0$$

$$SU = 0$$

where

CC = capital cost, dollars

$$X = \frac{Q_{avg}(1000)}{7.48} = \frac{\text{average flow (mgd) } 1000}{7.48}$$

8-35. Pure Oxygen Activated Sludge. Cost formulations for pure oxygen activated sludge units are as follows:

$$CC = 5658X^{0.6627}$$

$$OHR = 0$$

$$XHR = 0$$

$$SU = 0$$

where

CC = capital cost, dollars

$$X = \frac{(0.5)Q_{avg}(1000)}{7.48} = \frac{0.5 \text{ average flow (mgd) } 1000}{7.48}$$

8-36. Aerated Aerobic Lagoons. Cost formulations for aerated aerobic lagoons are as follows:

$$CC = 23{,}222X^{0.6311}$$

$$OHR = 711X^{0.361}$$

$$XHR = 125X^{0.399}$$

$$SU = 0$$

where

CC = capital cost, dollars

X = V = volume of lagoon, million gal

OHR = annual operating labor, man-hours

XHR = annual maintenance labor, man-hours

8-37. Aerated Facultative Lagoon. Cost formulations for aerated facultative lagoons are as follows:

$$CC = 23{,}222X^{0.6311}$$

$$OHR = 711X^{0.361}$$

$$XHR = 125X^{0.399}$$

$$SU = 0$$

where

CC = capital cost, dollars

X = V = volume of lagoon, million gal

OHR = annual operating labor, man-hours

XHR = annual maintenance labor, man-hours

8-38. Oxidation Ditch. Cost formulations for oxidation ditches are as follows:

$$CC = 5658X^{0.6627}$$

$$OHR = 0$$

$$XHR = 0$$

$$SU = 0$$

where

CC = capital cost, dollars

$$X = \frac{(1.5)Q_{avg}(1000)}{7.48} = \frac{1.5 \text{ average flow (mgd) } 1000}{7.48}$$

8-39. Nitrification-Denitrification. Cost formulations for nitrification-denitrification units are as follows:

a. Nitrification.

$$CC = 5658X^{0.6627}$$

$$OHR = 0$$

$$XHR = 0$$

$$SU = 0$$

where

CC = capital cost, dollars

$$X = \frac{Q_{avg}(1000)}{7.48} = \frac{\text{average flow (1000)}}{7.48}$$

b. Denitrification.

$$CC = .5658X^{0.6627}$$

$$OHR = 0$$

$$XHR = 0$$

$$SU = 0$$

where

CC = capital cost, dollars

$$X = \frac{Q_{avg}(1000)}{7.48} = \frac{\text{average flow (mgd) 1000}}{7.48}$$

c. Mechanical aeration.[1]

$$CC = 2911A^{0.788}$$

$$OHR = 150A^{0.49}$$

$$XHR = 53A^{0.568}$$

$$SU = \frac{0.02(24)365(A)}{1.341}$$

where

CC = capital cost, dollars

OHR = annual operating labor, man-hours

---

[1] Mechanical or diffused aeration is used with processes described in paragraphs 8-30 through 8-40.

XHR = annual maintenence labor, man-hours

SU = materials and supply cost, dollars

A = hp = horsepower required

d. Diffused Aeration.[1]

$$CC = 78230X^{0.6627}$$

$$OHR = 937X^{0.4818}$$

$$XHR = 463X^{0.5467}$$

$$SU = 0$$

where

CC = capital cost, dollars

X = required air flow, 1000 cfm

OHR = annual operating labor, man-hours

XHR = annual maintenance labor, man-hours

8-40. Aerobic Digestion. Cost formulations for aerobic digesters are as follows:

$$CC = 5658X^{0.6627}$$

$$OHR = 0$$

$$XHR = 0$$

$$SU = 0$$

where

CC = capital cost, dollars

---

[1] Mechanical or diffused aeration is used with processes described in paragraphs 8-30 through 8-40.

$$X = \frac{\text{vol}}{7.48(1000)} = \frac{\text{volume(million gal)}}{7.48(1000)}$$

8-41. Anaerobic Digestion. Cost formulations for anaerobic digesters are as follows:

$$CC = 17{,}432X^{0.5773}$$

$$OHR = 88.8X^{0.6132}$$

$$XHR = 56.7X^{0.596}$$

$$SU = 191X^{0.6058}$$

where

CC = capital cost, dollars

$$X = \frac{\text{vol}}{1000} = \frac{\text{volume (million gal)}}{1000}$$

OHR = annual operating labor, man-hours

XHR = annual maintenance labor, man-hours

SU = materials and supply costs, dollars

8-42. Stabilization Ponds. Cost formulations for stabilization ponds are as follows:

$$CC = 20{,}180X^{0.5834}$$

$$OHR = 58X^{0.557}$$

$$XHR = 104X^{0.3417}$$

$$SU = 142X^{0.513}$$

where

CC = capital cost, dollars

X = SA = surface area, sq ft

OHR = annual operation labor, man-hours

XHR = annual maintenance labor, man-hours

SU = materials and supply costs, dollars

APPENDIX A

REFERENCES

Albertson, O. E. and Guidi, E. E., Jr., "Centrifugation of Waste Sludges," Journal, Water Pollution Control Federation, Vol 41, Apr 1969, pp 607-628.

Albertsson, T. G. et al., "Investigation of the Use of High Purity Oxygen Aeration in the Conventional Activated Sludge Process," Water Pollution Control Research Series Report No. 17050DNW, May 1970, Federal Water Quality Administration, Washington, D. C.

Alford, J. M., "Sludge Disposal Experiences at North Little Rock, Arkansas," Journal, Water Pollution Control Federation, Vol 41, No. 1, pp 175-183.

American Public Health Association, American Society of Civil Engineers, American Water Works Association, and Water Pollution Control Federation, "Glossary, Water and Wastewater Control Engineering," 1969.

American Public Works Association, "Feasibility of Computer Control of Wastewater Treatment," Report No. 17090DOY, Dec 1970, U. S. Environmental Protection Agency, Washington, D. C.

American Society of Civil Engineers and the Water Pollution Control Federation, "Sewage Treatment Plant Design," Manual of Practice No. 8, 1959, 1961, 1967, 1968, Water Pollution Control Federation, Washington, D. C.

American Water Works Association, Water Quality and Treatment, McGraw-Hill, New York, 1971.

Amirtharajah, A. and Cleasby, J. L., "Predicting Expansion of Filters During Backwash," Journal, American Water Works Association, Vol 64, 1972, pp 52-59.

Anderson, C. V., "Zero Discharge Sanitation System," 53rd Annual Washington Association of State Highway Officials Conference, 6 Jun 1974, Portland, Oreg.

Baker, J. M. and Graves, Q. B., "Recent Approaches for Trickling Filter Design," Journal, Sanitary Engineering Division, American Society of Civil Engineers, Vol 94, SA1, Feb 1968, pp 65-84.

Balakrishnan, S., Williamson, D., and Odey, R., "State of the Art Review on Sludge Incinerator Practices," Report No. 17070 Div 04/70, Apr 1970, Federal Water Quality Administration, Washington, D. C.

Bargman, R. D. and Borgerding, J., "Characterization of the Activated Sludge Process," Report No. R2-73-224, Apr 1973, U. S. Environmental Protection Agency, Washington, D. C.

Barnard, J. L. and Eckenfelder, W. W., Jr., "Treatment-Cost Relationships for Organic Industrial Wastes," 5th International Water Pollution Research Conference, Jul-Aug 1970.

Barnard, J. L. and Eckenfelder, W. W., Jr., "Treatment-Cost Relationships for Industrial Waste Treatment," Technical Report No. 23, 1971, Environmental and Water Resources Engineering, Vanderbilt University, Nashville, Tenn.

Barnhart, E. L. and Eckenfelder, W. W., Jr., "Theoretical Aspects of Aerated Lagoon Design," Symposium on Wastewater Treatment for Small Municipalities, 1965, Ecole Polytechnique, Montreal, Quebec, Canada.

Barsom, G., "Lagoon Performance and the State of Lagoon Technology," Report No. R2-73-144, Jun 1973, U. S. Environmental Protection Agency, Washington, D. C.

Bennett, E. R., Rein, D. A., and Linstedt, K. D., "Economic Aspects of Sludge Dewatering and Disposal," Journal of Environmental Division, American Society of Civil Engineers, Vol 99, 1973, p 55.

Bernard, J., "Sludge Centrifugation," 1st Seminar on Process Design for Water Quality Control, 1970, Vanderbilt University, Nashville, Tenn.

Bishop, N. E., Malina, J. F., Jr., and Eckenfelder, W. W., Jr., "Studies on Mixing and Heat Exchange in Aerated Lagoons," Technical Report EHE-70-21, CRWR-70, 1970, Center for Research in Water Resources, University of Texas at Austin.

Blecker, H. G. and Cadman, T. W., "Capital and Operating Costs of Pollution Control Equipment Modules - Vol I," Report No. R5-73-023a, Jul 1973, U. S. Environmental Protection Agency, Washington, D. C.

Blecker, H. G. and Nichols, T. M., "Capital and Operating Costs of Pollution Control Equipment Modules - Vol II," Report No. R5-73-023b, Jul 1973, U. S. Environmental Protection Agency, Washington, D. C.

Borchardt, J. A., "Nitrification in the Activated Sludge Process," The Activated Sludge Process, Bulletin, University of Michigan, Ann Arbor, Mich.

Bordien, D. G. and Stenburg, R. L., "Microscreening Effectively Polishes Activated Sludge Effluent," Water and Wastes Engineering, Vol 3, Sep 1966, pp 74-77.

Boucher, P. L., "A New Measure of the Filtrability of Fluids with Application to Water Engineering," ICE Journal (British), Vol 27, No. 4, 1947, pp 415-446.

Bouwer, H., "High Rate Land Treatment," Water Spectrum, Vol 6, No. 1, 1974, pp 18-25.

Bowers, M., "Tips on Sludge Drying Beds Care," Sewage and Industrial Waters, Vol 29, No. 7, Jul 1957, pp 835-836.

Brown and Caldwell, Engineers for EPA, "Nitrification and Denitrification Facilities," May 7-9, 1974, U. S. Environmental Protection Agency Technology Transfer, Orlando, Fla.

Brown, J. C. et al., "Methods for Improvement of Trickling Filter Plant Performance - Part I, Mechanical and Biological Optima," Report No. 670/2-73-047a, Aug 1973, U. S. Environmental Protection Agency, Washington, D. C.

Burd, R. S., "A Study of Sludge Handling and Disposal," Publication WP-20-4, May 1968, Federal Water Pollution Control Administration, Washington, D. C.

Burgess, J. V., "Comparison of Sludge Incineration Processes," Process Biochemistry, Vol 3, Apr 1968, p 27.

Burkhead, C. E., "Evaluation of CMAS Design Constants," Conference on Toward a Unified Concept of Biological Waste Treatment Design, 5-6 Oct 1972, Atlanta, Ga.

Burkhead, C. E. and McKinney, R. E., "Application of Complete-Mixing Activated Sludge Design Equations to Industrial Wastes," Journal, Water Pollution Control Federation, Vol 40, Apr 1968, pp 557-570.

Burns and Roe, Inc., "Process Design Manual for Suspended Solids Removal," prepared for the U. S. Environmental Protection Agency Technology, Transfer, Oct 1971, Washington, D. C.

Busch, A. W., Aerobic Biological Treatment of Wastewaters, Oligodynamics Press, 1971.

Camp, T. R., "Grit Chamber Design," Sewage Works Journal, Vol 14, No. 2, Mar 1942, pp 368-381.

Camp, T. R., "Sedimentation and the Design of Settling Tanks," Transactions, American Society of Civil Engineers, Vol 111, Part III, 1946, pp 895-952.

Camp, T. R., "Flocculation and Flocculation Basins," Transactions, American Society of Civil Engineers, Vol 120, 1955, pp 1-16.

Camp, T. R., "Theory of Water Filtration," Journal, Sanitary Engineering Division, American Society of Civil Engineers, Vol 90, SA4, 1964, pp 1-30.

Cardile, R. P. and Verhoff, F. H., "Economical Refuse Truck Size Determination," Journal, Environmental Engineering Division, American Society of Civil Engineers, Vol 90, SA4, 1964, pp 1-30.

Cardinal, P. J., "Advances in Multihearth Incineration," Process Biochemistry, Vol 6, 1971, pp 27-31.

Carlson, C. A., Hunt, P. G., and Delaney, T. B., Jr., "Overland Flow Treatment of Wastewater," Miscellaneous Paper Y-74-3, Aug 1974, U. S. Army Engineer Waterways Experiment Station, CE, Vicksburg, Miss.

Center for Research, Inc., University of Kansas, "Oxygen Consumption in Continuous Biological Culture," Report Number 17050DJS, May 1971, U. S. Environmental Protection Agency, Washington, D. C.

Center for the Study of Federalism, "Green Land - Clean Streams: The Beneficial Use of Wastewater Through Land Treatment," 1972, Center for the Study of Federalism, Temple University, Philadelphia, Pa.

City of Austin, Texas, "Design Guides for Biological Wastewater Treatment Processes," Report No. 11010ESQ, Aug 1971, U. S. Environmental Protection Agency, Washington, D. C.

Clark, B. D., "Basic Characteristics at Winter Recreational Areas." PR-7, Aug 1968, Federal Water Quality Administration, Washington, D. C.

Clark, J. W. and Viessman, W., Jr., Water Supply and Pollution Control, International Textbook Co., Scranton, 1966.

Clark, R. M. and Gillean, J. I., "Systems Analysis and Solid Waste Planning," Journal, Environmental Engineering Division, American Society of Civil Engineers, Vol 100, 1974, p 7.

Clark, R. M. and Helms, B. P., "Fleet Selection for Solid Waste Collection Systems," Journal, Environmental Engineering Division, American Society of Civil Engineers, Vol 98, 1972, p 71.

Cleasby, J. L., "Deep Granular Filters, Modeling and Simulation," Proceeding, Association of Environmental Engineers in Profession, Eighth Annual Workshop, 18-22 Dec 1972, Nassau.

Cleasby, J. L. and Baumann, E. R., "Selection of Sand Filtration Rates," Journal, American Waterworks Association, Vol 54, 1962, pp 579-602.

Cohen, J. M. and Hannah, S. A., "Coagulation and Flocculation," Water Quality and Treatment, McGraw-Hill, New York, 1971.

College of Engineering, Oklahoma State University, "Aerobic Digestion of Organic Wastes," Report No. 17070DAU, Dec 1971, U. S. Environmental Protection Agency, Washington, D. C.

Copeland, C. G., "Water Reuse and Black Liquor Oxidation by the Container-Copeland Process," Proceedings, 19th Industrial Waste Conference, Purdue University, Lafayette, Ind., 1969.

Copeland, C. G., "The Copeland Process Fluid Bed System and Pollution Control Worldwide," Proceedings, 24th Industrial Waste Conference, Perdue University, Lafayette, Ind., 1969.

Copeland, C. G., "Design and Operation of Fluidized Bed Incinerators," Water and Sewage Works, Vol 117, 1970, p R245-9.

Cotteral, J. A., Jr., and Norris, D. P., "Septic Tank Systems," Journal, Sanitary Engineering Division, American Society of Civil Engineers, Vol 95, SA4, 1969, pp 715-746.

Cover, A. E. and Pieron, L. J., "Appraisal of Granular Carbon Contactors Phase I and II," Report No. TWRC-11, May 1969, Federal Water Pollution Control Administration, Washington, D. C.

Cover, A. E. and Wood, C. E., "Appraisal of Granular Carbon Contactors Phase III," Report No. TWRC-12, May 1969, Federal Water Pollution Control Administration, Washington, D. C.

Culp, G. L., Hsuing, K., and Conley, W. R., "Tube Clarification Process, Operation Experience," Journal, Sanitary Engineering Division, American Society of Civil Engineers, Vol 95, SA5, 1969, pp 829-848.

Culp, R. L. and Culp, G. L., Advanced Wastewater Treatment, Van Nostrand, New York, 1971.

Daniels, S. L., "Phosphorus Removal from Wastewater by Chemical Precipitation and Flocculation," The American Oil Chemists' Society, 1971, Short Course, Update on Detergents and Raw Materials, Jun 1971, Lake Placid, N. Y.

"Design and Operation of Complete Mixing Activated Sludge Systems," Environmental Pollution Control Service Reports, Vol 1, No. 3, Jul 1970.

Dick, R. I., "Fundamental Aspects of Sedimentation 2," Water and Wastes Engineering, Vol 6, No. 3, 1969, pp 44-45.

Dick, R. I., "Thickening," Advances in Water Quality Improvements - Physical and Chemical Processes, E. F. Gloyna and W. W. Eckenfelder, Jr., ed., University of Texas Press, Austin, 1970.

Dick, R. I., "Thickening," Seminar on Process Design in Water Quality Engineering, 9-13 Nov 1970, Vanderbilt University, Nashville, Tenn.

Dick, R. I., "Sludge Treatment, Disposal, and Utilization Literature Review," Journal, Water Pollution Control Federation, Vol 43, Jun 1971, pp 1134-1149.

Door-Oliver, Incorporated, "Cost of Wastewater Treatment Processes," Report No. TWRC-6, Dec 1968, Federal Water Pollution Control Administration, Cincinnati, Ohio.

Dow Chemical Company, "A Literature Search and Critical Analysis of Biological Trickling Filter Studies - Vols I and II," Report No. 17050-DDY, Dec 1971, U. S. Environmental Protection Agency, Washington, D. C.

Drier, D. E., "Aerobic Digestion of Solids," Proceedings of 18th Purdue Industrial Waste Conference, 1963, Purdue University, Lafayette, Ind.

Drier, D. E., "Aerobic Digestion of Sludge," paper presented at Sanitary Engineering Institute, Mar 1965, University of Wisconsin, Madison, Wis.

Ducar, G. J. and Levin, P., "Mathematical Model of Sewage Sludge Fluidized Bed Incinerator Capacities and Costs," Report No. TWRC-10, 1969, Federal Water Quality Control Administration, Washington, D. C.

Eckenfelder, W. W., Jr., "Trickling Filter Design and Performance," Transactions, American Society of Civil Engineers, Vol 128, Part III, 1963, pp 371-394.

Eckenfelder, W. W., Jr., Industrial Water Pollution Control, McGraw-Hill, New York, 1966.

Eckenfelder, W. W., Jr., "Aerated Lagoon," Manual of Treatment Processes, Vol I, 1969, Environmental Science Services, Inc., Briarcliff Manor, New York.

Eckenfelder, W. W., Jr., "General Concepts of Biological Treatment," Manual of Treatment Processes, Vol 1, 1969, Environmental Science Services, Inc., Briarcliff Manor, New York.

Eckenfelder, W. W., Jr., Water Quality Engineering for Practicing Engineers, Barnes and Nobel, New York, 1970.

Eckenfelder, W. W., Jr., "Activated Sludge and Extended Aeration," Process Design in Water Quality Engineering - New Concepts and Developments, 1971, Vanderbilt University, Nashville, Tenn.

Eckenfelder, W. W., Jr., and Barnhardt, W., "Performance of a High-Rate Trickling Filter Using Selected Media," Journal, Water Pollution Control Federation, Vol 35, No. 12, 1963, pp 1535-1551.

Eckenfelder, W. W., Jr., and Cecil, L. K., Application of New Concepts of Physical-Chemical Wastewater Treatment, Pergamon Press, New York, 1972.

Eckenfelder, W. W., Jr., and Ford, D. L., "Economics of Wastewater Treatment," Chemical Engineering, Vol 76, Aug 1969, pp 109-118.

Eckenfelder, W. W., Jr., and Ford, D. L., Water Pollution Control, Pemberton Press, New York, 1970.

Eckenfelder, W. W., Jr., and O'Connor, O. J., Biological Waste Treatment, Pergamon Press, New York, 1961.

Edde, H. J. and Eckenfelder, W. W., Jr., "Theoretical Concept of Gravity Sludge Thickening," Technical Report EHE-02-6701, CRWR-15, 1967, Center for Research in Water Resources, University of Texas, Austin.

Eilers, R. G. and Smith, R., "Wastewater Treatment Plant Cost Estimating Program," Apr 1971, Environmental Protection Agency, Water Quality Office, Advanced Waste Treatment Research Laboratory, Cincinnati, Ohio.

Engineering-Science, Inc., "State of the Art of the Microscreen Process," prepared for the Federal Water Quality Administration, Contract No. 14-12-819, Jul 1970, Washington, D. C.

Engineering-Science, Inc., "Theoretical Formulation of Operational Model for Simulation of Microscreen Behavior, Report No. B-1, Sep 1970, Federal Water Quality Administration, Washington, D. C.

Engineering-Science, Inc., "Current State of Operational Model for Simulation of Microscreen Behavior," prepared for the Federal Water Quality Administration, Contract No. 14-12-819, Nov 1970, Washington, D. C.

Engineering-Science, Inc., "Development of Field Data Acquisition Program for Pilot-Scale Microscreens," prepared for the Federal Water Quality Administration, Contract No. 14-12-819, Jan 1971, Washington, D. C.

Engineering-Science, Inc., "Investigation of Response Surfaces of the Microscreen Process," Report No. 17090EEM, Dec 1971, U. S. Environmental Protection Agency, Washington, D. C.

Equipment Manufacturers' Catalogs.

Fair, G. M. and Geyer, J. C., Elements of Water Supply and Waste Water Disposal, Wiley, New York, 1955.

Fair, G. M. and Moore, E. W., "Sewage Sludge Fuel Value Related to Volatile Matter," Engineering News-Record, Vol 681, 1935.

Fair, G. M., Geyer, J. C., and Okun, D. A., Water Purification and Wastewater Treatment and Disposal; Water and Wastewater Engineering, Vol 2, Wiley, New York, 1968.

Field, W. B., "Design of a pH Control System by Analog Simulation," Instrument Society of American Journal, Vol 6, 1959, pp 42-50.

FMC Corporation, "Link-Belt Wastewater Treatment Equipment Design Catalogue," Binder 2650, Colmar, Pa.

Gaillard, J. R., "Fluidized Bed Incineration of Sewage Sludge," Water Pollution Control, Vol 73, 1973, pp 190-192.

Galler, W. S. and Gotaas, H. B., "Analysis of Biological Filter Variables," Journal, Sanitary Engineering Division, American Society of Civil Engineers, Vol 90, SA6, 1964, pp 59-79.

Gaudy, A. G., Jr., and Gaudy, E. T., "Biological Concepts for Design and Operation of the Activated Sludge Process," Report No. 17090-FQJ, Sep 1971, U. S. Environmental Protection Agency, Washington, D. C.

Germain, J., "Economic Treatment of Domestic Waste by Plastic-Medium Trickling Filters," 38th Annual Conference, Water Pollution Control Federation, October 1965, Atlantic City, N. J.

Gloyna, E. F., "Basis for Waste Stabilization Pond Design," Advances in Water Quality Improvements - Physical and Chemical Processes, E. F. Gloyna and W. W. Eckenfelder, Jr., ed., University of Texas Press, Austin, 1970.

Gloyna, E. F., "Waste Stabilization Ponds," World Health Organization, Geneva, Switzerland, 1971.

Goldstein, S. N. and Moberg, W. J., Jr., "Wastewater Treatment Systems for Rural Communities," Commission on Rural Water, 1975.

Goodman, B. L., Design Handbook of Wastewater Systems: Domestic, Industrial, Commercial, Technomic, Westport, Conn., 1971.

Goodman, B. L. and Englande, A. J., Jr., "A Consolidated Approach to Activated Sludge Process Design," Conference on Toward a Unified Concept of Biological Waste Treatment Design, 5-6 Oct 1972, Atlanta, Ga.

Gray, D. H. and Penessis, C., "Engineering Properties of Sludge Ash," Journal, Water Pollution Control Federation, Vol 44, May 1972, p 847.

Great Lakes-Upper Mississippi River Board of State Sanitary Engineers, "Recommended Standards for Sewage Works (Ten States Standards)," 1971, Health Education Service, Albany, N. Y.

Greer, W. N., The Measurement and Control of pH, Leeds and Northrup, Philadelphia, 1966.

Guarino, C. F. et al., "Land and Sea Solids Management Alternatives in Philadelphia," Journal, Water Pollution Control Federation, Vol 47, 1975, p 2551.

Guillaume, F. P., "Evaluation of the Oxidation Ditch as a Means of Wastewater Treatment in Ontario," Research Publication No. 6, Jul 1964, The Ontario Wastewater Commission, Ontario, Canada.

Hansen, S. P., Culp, G. L., and Stukenberg, J. R., "Practical Application of Idealized Sedimentation Theory in Wastewater Treatment," Journal, Water Pollution Control Federation, Vol 41, Aug 1969, pp 1421-1444.

Hanway, J. E., "Fluidized-Bed Processes - A Solution for Industrial Waste Problems," Proceedings, 21st Industrial Waste Conference, Purdue University, Lafayette, Ind., 1966.

Harkness, N. et al., "Some Observations on the Incineration of Sewage Sludge," Water Pollution Control, Vol 71, No. 1, 1972, pp 16-33.

Headquarters, Department of the Army and Department of the Air Force, "Domestic Wastewater Treatment," Technical Manual TM 5-814-3/AFM 88-11, Chap. 3, Washington, D. C.

Helmenstein, S., and Martin, F., "Planning Criteria for Refuse Incineration Systems," Combustion, Vol 45, May 1974, p 11.

Herman, E. R. and Gloyna, E. F., "Waste Stabilization Ponds, III, Formulation of Design Equations," Sewage and Industrial Wastes, Vol 30, No. 8, Aug 1958, pp 963-975.

Hinsely, T. D., "Sludge Recycling: The Most Reasonable Choice?" Water Spectrum, Vol 5, 1973, pp 1-8.

Hinsely, T. D., "Water Renovation for Unrestricted Re-Use," Water Spectrum, Vol 5, No. 2, 1973, pp 1-8.

Hoak, R. D., "Acid Iron Wastes Neutralization," Sewage and Industrial Wastes, Vol 22, No. 2, 1950, pp 212-221.

Hoeppel, R. E., Hunt, P. G., and Delaney, T. B., Jr., "Wastewater Treatment on Soils of Low Permeability," Miscellaneous Paper Y-74-2, Jul 1974, U. S. Army Engineer Waterways Experiment Station, CE, Vicksburg, Miss.

Hsuing, K. and Cleasby, J. L., "Prediction of Filter Performance," Journal, Sanitary Engineering Division, American Society of Civil Engineers, Vol 94, SA6, 1968, pp 1043-1070.

Hunt, P. G., "Overland Flow," Water Spectrum, Vol 5, No. 4, 1973, pp 16-21.

Iowa State University, "Estimating Staffing and Cost Factors for Small Wastewater Treatment Plants Less Than 1 MGD, Parts I and II," Jun 1973, U. S. Environmental Protection Agency, Washington, D. C.

Jaworski, N., Lawton, G. W., and Rohlich, G. A., "Aerobic Sludge Digestion," International Journal of Air and Water Pollution, Vol 4, 1961, pp 106-114.

Jenks, J. H., "Continuous Centrifuge Used to Dewater Variety of Sludges," Waste Engineering, Jul 1958, pp 360-361.

Johnson, E. L., Beeghly, J. H., and Wukasch, R. F., "Phosphorus Removal with Iron and Polyelectrolytes," Public Works, Vol 100, No. 11, 1969, pp 66-69.

Jones, B. R. S., "Vacuum Sludge Filtration, II, Prediction of Filter Performance," Sewage and Industrial Wastes, Vol 28, No. 9, Sep 1956, pp 1103-1115.

Kunin, R., Ion Exchange Resins, 2d ed., Wiley, New York, 1958.

Lakeside Engineering Corporation, "Rotor Aeration," Apr 1960.

Lawrence, A. W. and McCarty, P. L., "Unified Basis for Biological Treatment Design and Operation," Journal, Sanitary Engineering Division, American Society of Civil Engineers, Vol 96, SA3, 1970.

Liao, P. B., "Fluidized-Bed Sludge Incinerator Design," Journal, Water Pollution Control Federation, Vol 46, No. 8, 1972, pp 1895-1913.

Liao, P. B. and Pilat, M. J., "Air Pollutant Emissions from Fluidized Bed Sewage Sludge Incinerators," Water and Sewage Works, Vol 119, No. 2, pp 68-72.

Liptak, B. G., Environmental Engineers Handbook, Vol 1, Chilton Book Company, Radnor, Pennsylvania, 1974.

Loran, B. I., "Burn That Sludge," Water and Wastes Engineering, Vol 12, Oct 1975, p 65.

Leckie, J. and Stumm, W., "Phosphate Precipitation," Advances in Water Quality Improvements - Physical and Chemical Processes, E. F. Gloyna and W. W. Eckenfelder, Jr., ed., University of Texas Press, Austin, 1970.

Lee, M. L. and Babbitt, H. E., "Constant Velocity Grit Chambers with Parshall Flume Control," Sewage Works Journal, Vol 18, No. 4, Jul 1946.

Loher, R. C., "Aerobic Digestion-Factors Affecting Design," 9th Great Plains Sewage Works Design Conference, Mar 1965.

Lynam, B., Ettelt, G., and McAloon, T., "Tertiary Treatment at Metro Chicago by Means of Rapid Sand Filtration and Microstrainers," Journal, Water Pollution Control Federation, Vol 41, Feb 1969, pp 247-279.

Lynam, B., McDonnell, G., and Krup, M., "Start-up and Operation of Two New High-Rate Digestion Systems," Journal, Water Pollution Control Federation, Vol 39, Apr 1967, pp 518-535.

Maier, W. J., "Biological Removal of Colloidal Matter from Wastewater," Report No. R2-73-147, Jun 1973, U. S. Environmental Protection Agency, Washington, D. C.

Malina, F. J., "Aerobic Sludge Stabilization," Manual of Treatment Processes, Vol 1, Environmental Science Services, Inc., Briarcliff Manor, New York, 1969.

Malina, J. F., "Sludge Filtration and Sludge Conditioning," Advances in Water Quality Improvements, University of Texas, Water Resources Symposium No. 3, 1970, Austin, Tex.

Marais, G. V. R., "New Factors in the Design, Operation and Performance of Waste Stabilization Ponds with Special Reference to Health," Expert Committee Meeting on Environmental Change and Resulting Impact on Health Organization, 1964.

Marske, D. M. and Boyle, J. D., "Chlorine Contact Chamber Design - A Field Evaluation," Water and Sewage Works, Vol 120, Jan 1973, pp 70-77.

Matherly, J., "Water Usage Rates and Wastewater Characteristics at a Corps of Engineers Recreation Area" (unpublished), U. S. Army Engineer Construction Engineering Research Laboratory, CE, Champaign, Ill.

McCarty, P. L., "Biological Processes for Nitrogen Removal: Theory and Application," Proceedings, Twelfth Sanitary Engineering Conference, 1970, University of Illinois, Urbana, Ill.

McCarty, P. L. and Brodersen, C. F., "Theory of Extended Aeration Activated Sludge," Journal, Water Pollution Control Federation, Vol 34, 1962, pp 1095-1103.

McKinney, R. E., "Mathematics of Complete-Mixing Activated Sludge," Journal, Sanitary Engineering Division, American Society of Civil Engineers, SA3, May 1962, pp 87-113.

McKinney, R. E., Microbiology for Sanitary Engineers, McGraw-Hill, New York, 1962.

McKinney, R. E., "Overloaded Oxidation Ponds - Two Case Studies," Journal, Water Pollution Control Federation, Vol 40, Jan 1968, pp 49-56.

McKinney, R. E., "Design and Operation of Complete Mixing Activated Sludge Systems," Environmental Pollution Control Services Reports, Vol 1, No. 3, Jul 1970, pp 1-34.

McKinney, R. E. and Benjes, H. H., "Design and Operation of Aerated Lagoons," Paper No. 3P2-1, Jul 1965, National Symposium on Sanitary Engineering Research, Development and Design.

McKinney, R. E. and O'Brien, W. J., "Activated Sludge - Basic Design Concepts," Journal, Water Pollution Control Federation, Vol 40, Nov 1968, pp 1831-1843.

McKinney, R. E. and Ooter, R. J., "Concepts of Complete Mixing Activated Sludge," Bulletin No. 60, 1969, Transactions of the 19th Annual Conference on Sanitary Engineering, University of Kansas, Lawrence, Kans.

McKinney, R. E. and Pfeffer, J. T., "Oxygen-Enriched Air for Biological Waste Treatment," Water and Sewage Works, Vol 112, Oct 1965, pp 381-384.

McLaughlin, R. T., "The Settling Properties of Suspensions," Journal, Hydraulic Division, American Society of Civil Engineers, Part I, Paper No. 2311, Vol 85, No. HY12, 1959, pp 9-41.

Mechalas, B. J., Allen, P. M., III, and Matyskiela, W. W., "A Study of Nitrification and Denitrification," Report No. 17010DRD, Jul 1970, U. S. Environmental Protection Agency, Washington, D. C.

Metcalf and Eddy, Inc., Wastewater Engineering; Collection, Treatment, and Disposal, McGraw-Hill, New York, 1972.

Middleton, E., "Basic Sewage Characteristics at a Corps of Engineers Recreational Area" (unpublished), Jan 1973, U. S. Army Engineer District, St. Louis, CE, St. Louis, Mo.

Millward, R. S. and Booth, P. B., "Incorporating Sludge Combustion Into Sewage Treatment Plant," Water and Sewage Works, Vol 115, 1968, pp R-169-174.

Mine Safety Appliances Research Corporation, "Optimization of the Regeneration Procedure for Granular Activated Carbon," Report No. 17020DAO, Jul 1970, U. S. Environmental Protection Agency, Washington, D. C.

Mixon, F. O., "Filterability Index and Microscreener Design," Journal, Water Pollution Control Federation, Vol 42, No. 11, Nov 1970, pp 1944-1950.

Moore, S. F. and Schroeder, E. D., "An Investigation of the Effects of Residence Time on Anaerobic Bacterial Denitrification," Water Research, Vol 4, No. 10, 1970, pp 685-694.

Mulbarger, M. C., "Nitrification and Denitrification in Activated Sludge Systems," Journal, Water Pollution Control Federation, Vol 43, Oct 1971, pp 2059-2070.

National Research Council, "Trickling Filters (in Sewage Treatment at Military Installations)," Sewage Works Journal, Vol 18, No. 5, 1946, pp 787-1028.

Neighbor, J. B. and Cooper, T. W., "Design and Operation Criteria for Aerated Grit Chambers," Water and Sewage Works, Vol 112, Dec 1965, pp 448-454.

Nemerow, N. L., Liquid Waste of Industry, Addison-Wesley, Reading, Mass., 1971.

Nesbitt, J. B., "Removal of Phosphorus from Municipal Sewage Plant Effluents," Engineering Research Bulletin B-93, 1966, College of Engineering, Pennsylvania State University, University Park, Pa.

Office, Chief of Engineers, Department of the Army, "Technical Manual on Criteria for Water Pollution Prevention, Control, and Abatement," Intermediate Draft prepared by Stanley Consultants, 30 Sep 1974, Washington, D. C.

Okun, D. A., "System of Bio-Precipitation of Organic Matter from Sewage," Sewage Works Journal, Vol 21, No. 5, 1949, pp 763-794.

O'Melia, C. R., "Coagulation in Water and Wastewater Treatment," Advances in Water Quality Improvements - Physical and Chemical Processes, E. F. Gloyna and W. W. Eckenfelder, Jr., ed., University of Texas Press, Austin, 1970.

O'Melia, C. R. and Stumm, W., "Theory of Water Filtration," Journal, American Water Works Association, Vol 59, Nov 1967, pp 1393-1412.

Oswald, W. J., "Rational Design of Waste Ponds," Proceedings, Symposium on Waste Treatment by Oxidation Ponds, Nagpur, India, 1963.

Oswald, W. J., "Quality Management by Engineered Ponds," Engineering Management of Water Quality, McGraw-Hill, New York, 1968.

Parker, H. W., "Water Supply and Waste Disposal Series, Oxidation Ditch Sewage Waste Treatment Process," Apr 1972, U. S. Department of Transportation, Federal Highway Administration.

Parkhurst, J. D. et al., "Dewatering Digested Primary Sludge," Journal, Water Pollution Control Federation, Vol 46, 1974, p 468.

Patterson, W. L. and Banker, R. F., "Estimating Costs and Manpower Requirements for Conventional Wastewater Treatment Facilities," Report No. 17090DAN, Oct 1971, U. S. Environmental Protection Agency, Washington, D. C.

Pavoni, J. L. et al., Handbook of Solid Waste Disposal, Van Nostrand Reinhold, New York, 1975.

Peak, R., "Capital and Operating Costs of Cation Exchange Units and Methods of Cations Exchange Bed Design," M. S. Thesis, University of Washington, Seattle, Wash., 1957.

Peak, R. and David, M., "Costs of Cation Exchange Equipment," Chemical Engineering Progress, Vol 53, Jan 1957, pp 37J-40J.

Pohland, F. G. and Kang, J. J., "Anaerobic Processes," Journal, Water Pollution Control Federation, Vol 46, No. 6, 1971, pp 1129-1133.

Prather, B. F., "Wastewater Aeration," The Oil and Gas Journal, Vol 57, No. 49, 1959, pp 78-80, 84, 86-91.

Reed, S. C. and Buzzell, T. D., "Land Treatment of Wastewaters for Rural Communities," Rural Environmental Engineering Conference, 26-28 Sep 1973, U. S. Army Cold Regions Research and Engineering Laboratory, Warren, Vt.

Rex Chainbelt, Inc., "A Mathematical Model of a Final Clarifier," Report No. 17090FJW, Feb 1972, U. S. Environmental Protection Agency, Washington, D. C.

Reynolds, E., Gibbon, J. D., and Atwood, D., "Smoothing Quality Variations in Storage Chests Holding Paper Stock," Transactions, Institution of Chemical Engineers, Vol 42, T13, 1964.

Rodriguez, R. T., "Aqua-Sans Sewage Disposal System," Special Training Report, Jun 1974, Department of Transportation, Federal Highway Administration, Region 6, Texas Division.

Roesler, J. F., Smith, R., and Eilers, R. G., "Mathematical Simulation of Ammonia Stripping Towers for Wastewater Treatment," Internal Report, Jan 1970, Advanced Waste Treatment Research Laboratory, Cincinnati, Ohio.

Roy F. Weston., Inc., "Process Design Manual for Upgrading Existing Wastewater Treatment Plants," prepared for the U. S. Environmental Protection Agency, Technology Transfer, Oct 1971, Washington, D. C.

Ruben, A. J., "Chemistry of Water Supply Treatment and Distribution," Ann Arbor Science, Ann Arbor, Mich., 1974.

Sanks, R. L., "Ion Exchange," Seminar on Process Design for Water Quality Control, 9-13 Nov 1970, Vanderbilt University, Nashville, Tenn.

Sawyer, C. N., "New Concepts in Aerated Lagoon Design and Operation," Advances in Water Quality Improvements - Physical and Chemical Processes, E. F. Gloyna and W. W. Eckenfelder, Jr., ed., Univeraity of Texas Press, Austin, 1970.

Sawyer, C. N., "Nitrification and Denitrification Facilities," Aug 1973, U. S. Environmental Protection Agency, Technology Transfer, Washington, D. C.

Sawyer, C. N. and Grubling, J. S., "Fundamental Considerations in High Rate Digestion," Journal, Sanitary Engineering Division, American Society of Civil Engineers, Vol 86, Mar 1960, pp 49-63.

Sawyer, C. N. and McCarty, P. L., Chemistry for Sanitary Engineers, McGraw-Hill, New York, 1967.

Schuessler, R. G., "Phosphorus Removal - A Controllable Process," Chemical Engineering Progress Symposium Series, Vol 67, No. 107, 1971.

Schulze, K. L., "Load and Efficiency of Trickling Filters," Journal, Water Pollution Control Federation, Vol 32, No. 3, 1960, pp 245-261.

Searle, S. S. and Kirby, C. F., "Waste into Wealth," Water Spectrum, Vol 4, No. 3, 1972, pp 15-21.

Seedel, D. F. and Criter, R. W., "Evaluation of Anaerobic Denitrification Processes," Journal, Sanitary Engineering Division, American Society of Civil Engineers, Vol 96, No. SA2, 1970.

Shea, T. G. and Stockton, J. D., "Wastewater Sludge Utilization and Disposal Costs," 1975, Office of Water Program Operations, U. S. Environmental Protection Agency, Washington, D. C.

Shindala, A. and Bryme, W. J., "Anaerobic Digestion of Thickened Sludge," Public Works, Vol 101, Feb 1970, pp 73-76.

Shindala, A., Dust, J. V., and Champion, A. L., "Accelerated Digestion of Concentrated Sludge," Water and Sewage Works, Vol 117, Sep 1970, pp 329-332.

Shinskey, F. G., "Feed Forward Control of pH," Instrumentation Technology, Vol 15, 1968.

Simpson, G. D., "Operation of Vacuum Filters," Journal, Water Pollution Control Federation, Vol 36, Dec 1964, pp 1460-1467.

Slechta, A. F. and Culp, G. L., "Water Reclamation Studies at the South Tahoe Public Utility District," Journal, Water Pollution Control Federation, Vol 39, May 1967, pp 787-814.

"Sludge Incineration Plant Uses Fluid-Bed Furnace," Chemical and Process Engineering, Apr 1972, p 7.

Smith, H. S., "Homogeneous Activated Sludge/1 Principles and Features of the Activated Sludge Process," Water and Wastes Engineering, Vol 4, Jul 1967, pp 46-50.

Smith, R., "Cost of Conventional and Advanced Treatment of Waste Water," Journal, Water Pollution Control Federation, Vol 40, Sep 1968, pp 1546-1574.

Smith, R., "Preliminary Design of Wastewater Treatment Systems," Journal, Sanitary Engineering Division, American Society of Civil Engineers, Vol 95, No. SA1, 1969, pp 117-118.

Smith, R., "Design of Ammonia Stripping Towers for Wastewater Treatment," Seminar on Process Design for Water Quality Control, 9-13 Nov 1970, Vanderbilt University, Nashville, Tenn.

Smith, R. and Eilers, R. G., "A Generalized Computer Model for Steady-State Performance of the Activated Sludge Process," FWQA Report No. TWRC-15, Oct 1969, Robert A. Taft Water Research Center, Cincinnati, Ohio.

Smith R. and McMichael, N. R., "Cost of Wastewater Treatment Processes," FWPCA Report No. TWRC-6, Dec 1968, Robert A. Taft Water Research Center, Cincinnati, Ohio.

Smith, R. and McMichael, W. F., "Cost and Performance Estimates for Tertiary Wastewater Treating Processes," PB 189 953, Jun 1969, Federal Water Pollution Control Administration, Cincinnati, Ohio.

Snoeyink, V. L. and Mahoney, J. A., "Summary of Commercially Available Wastewater Treatment Plants," Technical Report No. AFWL-TR-72-45, Jul 1972, Air Force Weapons Laboratory, Kirtland Air Force Base, Albuquerque, N. Mex.

Snow, R. H. and Wenk, W. J., "Ammonia Stripping Mathematical Model for Wastewater Treatment," Report No. IITRI-C6152-6, Dec 1968, Federal Water Pollution Control Administration, Washington, D. C.

South Tahoe Public Utility District, "Advanced Wastewater Treatment as Practiced at South Tahoe," Report No. 17010ELQ, Aug 1971, U. S. Environmental Protection Agency, Washington, D. C.

Stander, G. J. and Van Vuuren, L. R. J., "Flotation of Sewage and Waste Solids," Advances in Water Quality Improvements - Physical and Chemical Processes, E. F. Gloyna and W. W. Eckenfelder, Jr., ed., University of Texas Press, Austin, 1970.

Stanley Consultants, Inc., "Sludge Handling and Disposal, Phase I, State of the Art, Report to Metropolitan Sewer Board of the Twin Cities Area," Nov 15, 1972.

Stanley Consultants, Inc., "Wastewater Treatment Unit Processes Design and Cost Estimating Data," prepared for the Savannah District Corps of Engineers, Contract No. DACW21-74-C-0067, Jan 1975, Savannah, Ga.

Stensel, H. D. and Shell, G. L., "Two Methods of Biological Treatment Design," Journal, Water Pollution Control Federation, Vol 46, Feb 1974, pp 271-283.

Stewart, M. J., "Activated Sludge System Variations - Specific Applications," The 15th Ontario Industrial Waste Conference, 9-12 Jun 1968, Niagara Falls, Ontario.

Stumm, W. and Morgan, J. J., Aquatic Chemistry, Wiley, New York, 1970.

Stumm, W. and O'Melia, C. R., "Stoichiometry of Coagulation," Journal, American Water Works Association, Vol 60, 1968, pp 514-539.

Sullivan, R. H., Cohn, M. M., and Baxter, S. S., "Survey of Facilities Using Land Application of Wastewater," Report No. 430/9-73-006, Jul 1973, U. S. Environmental Protection Agency, Washington, D. C.

Swindell-Dresser Company, "Process Design Manual for Carbon Adsorption," Oct 1971, U. S. Environmental Technology Transfer, Washington, D. C.

Tchobanoglous, F. and Elliassen, R., "Filtration of Treated Sewage Effluents," Journal, Sanitary Engineering Division, American Society of Civil Engineers, Vol 96, SA2, 1970.

Toerber, E. D., "Full Scale Parallel Activated Sludge Process Evaluation," Report No. R2-72-065, Nov 1972, U. S. Environmental Protection Agency, Washington, D. C.

Union Carbide Coporation, "Continued Evaluation of Oxygen Use in Conventional Activated Sludge Processing," Report No. 17050DNW, Feb 1972, U. S. Environmental Protection Agency, Washington, D. C.

Union Carbide Corporation, "Unox System Wastewater Treatment," Report of Pilot Study at Hooker's Point Treatment Plant, Tampa, Fla.

Unterberg, W., Sherwood, R. J., and Schnerder, G. R., "Computerized Design and Cost Estimation for Multiple Hearth Sludge Incinerators," Report No. EP 17070EBP, Jul 1971, Environmental Protection Agency, Washington, D. C.

U. S. Department of Health, Education and Welfare, "Manual of Septic-Tank Practice," Publication No. (HSM) 72-10020 (formerly Public Health Service Publication No. 526), 1972, Rockville, Md.

U. S. Department of Transportation, "Oxidation Ditch Sewage Waste Treatment Process," Water Supply and Waste Disposal Series, Vol 6, Apr 1972, U. S. Department of Transportation, Washington, D. C.

U. S. Environmental Protection Agency, "Process Design Manual for Phosphorus Removal," Oct 1971, Washington, D. C.

U. S. Environmental Protection Agency, Technology Transfer, "Process Design Manual for Upgrading Existing Wastewater Treatment Plants," 1973, Washington, D. C.

U. S. Environmental Protection Agency, Technology Transfer Seminars, "Sludge Handling and Disposal," 11-12 Dec 1973, Washington, D. C.

U. S. Environmental Protection Agency, "Guidance for Facilities Planning," Jan 1974, Washington, D. C.

U. S. Environmental Protection Agency, Technology Transfer, "Process Design Manual for Sludge Treatment and Disposal," Oct 1974.

U. S. Environmental Protection Agency, Technology Transfer, "Air Pollution Aspects fo Sludge Incineration," Report No. EQA 625/4-75-009, Jun 1975, Washington, D. C.

University of Kansas, "Waste Treatment Lagoons," 2d International Conference on Lagoon Technology, 1970, Lawrence, Kans.

Van Vuuren, L. R. J. et al., "Dispersed Air Flocculation/Flotation for Stripping of Organic Pollutants from Effluents," Water Research, Vol 2, 1968, pp 177-183.

Velz, C. J., "A Basic Law for the Performance of Biologic Beds," Sewage Works Journal, Vol 20, No. 3, 1960, pp 245-261.

Vesilind, P. A., Treatment and Disposal of Wastewater Sludges, Ann Arbor Science, Ann Arbor, Mich., 1974.

Vrablik, E. R., "Fundamental Principles of Dissolved-Air Flotation of Industrial Wastes," Proceedings, 14th Industrial Waste Conference, 1959, Purdue University, Lafayette, Ind.

Wallace, A. T., "Design and Analysis of Sedimentation Basins," Proceedings, Sixth Annual Sanitary and Water Resources Engineering Conference, Technical Report No. 13, 1967, pp 119-128, Department of Sanitary and Water Resources Engineering, Vanderbilt University, Nashville, Tenn.

Wallace, A. T., "Analysis of Equalization Basins," Journal, Sanitary Engineering Division, American Society of Civil Engineers, Vol 94, SA6, 1968, pp 1161-1174.

Wallace, A. T., "Equalization," Seminar on Process Design in Water Quality Control, 9-13 Nov 1970, Vanderbilt University, Nashville, Tenn.

Wallace, A. T., "Neutralization and pH Control," 1st Short Course on Design of Wastewater Treatment, 1970, Vanderbilt University, Nashville, Tenn.

Water Pollution Control Federation, "Chlorination of Sewage and Industrial Wastes," Manual of Practice, No. 4, 1951.

Water Resources Council, "Water and Related Land Resources, Establishment of Principles and Standards for Planning," Federal Register, Vol 38, No. 174, Sep 1973, pp 24778-24869.

"Water Treatment Plant Design," prepared by American Society of Civil Engineers, American Water Works Association, Conference of State Sanitary Engineers (1969).

Weber, W. J., Jr., "Principles and Applications of Adsorption," Manual of Treatment Processes, Environmental Science Services, Inc., Briarcliff Manor, New York, 1969.

Weber, W. J., Jr., Physicochemical Processes for Water Quality Control, Wiley-Interscience, New York, 1972.

Weston, R. F., "Design of Sludge Reaeration Activated Sludge Systems," Journal, Water Pollution Control Federation, Vol 33, No. 7, 1961, pp 748-757.

White, W. F. and Burns, T. E., "Continuous Centrifugal Treatment of Sewage Sludge," Water and Sewage Works, Vol 109, Oct 1962, pp 384-386.

Wukasch, R. F., "The Dow Process for Phosphorus Removal," Paper presented at the Federal Water Pollution Control Association Phosphorus Removal Symposium, Jun 1968, Chicago, Ill.

Zeper, J. and DeMan, A., "New Developments in the Design of Activated Sludge Tanks with Low BOD Loadings," 5th International Water Pollution Research Conference, Jul-Aug 1971, San Francisco, Calif.

APPENDIX B

ABBREVIATIONS

atm	atmosphere
av	average
avg	average
bhp	brake horsepower
Btu	British Thermal Unit
cal	calorie
cfs	cubic feet per second
cm	centimeter
cu ft	cubic foot
fpm	feet per minute
fps	feet per second
ft	foot
ft-lb	foot-pound
g	gram
gal	gallon
gpad	gallons per acre per day
gpcd	gallons per capita per day
gpd	gallons per day
gpm	gallons per minute
hp	horsepower
hr	hour
in.	inch
mgad	million gallons per acre per day
mgd	million gallons per day
mg	milligram
mg/l	milligrams per liter
min	minute
ml	milliliter
mm	millimeter
ppm	parts per million
psi	pounds per square inch
psia	pounds per square inch absolute
psig	pounds per square inch gage
rpm	revolutions per minute
rps	revolutions per second
cfm	standard cubic feet per minute
sec	second
sq ft	square foot
vol	volume

APPENDIX C

CONVERSION FACTORS FOR UNITS OF MEASUREMENT; DISSOLVED-OXYGEN SOLUBILITY DATA; PHYSICAL PROPERTIES OF WATER; CHEMICAL ELEMENTS AND SUBSTANCES; SPECIFIC WEIGHT

C-1. Conversion Factors. U. S. customary to metric (SI) and metric (SI) to U. S. customary units of measurement.

Length

1 inch = 2.54 cm
1 foot = 0.3048 m
1 yard = 0.915 m
1 mile (U. S. statute) = 1.6093 km
1 micron = 39.37 microinches
1 millimeter = 0.0394 in.
1 centimeter = 0.394 in.
1 meter = 1.093 yd
1 kilometer = 0.6214 mile

Area

1 square inch = 6.4516 cm^2
1 square foot = 0.0929 m^2
1 square yard = 0.8361 m^2
1 square mile (U. S. statute) = 2.59 km^2
1 acre = 4046.8 m^2
1 square centimeter = 0.155 $in.^2$
1 square meter = 1.196 yd^2

1 hectare = 2.471 acres
1 square kilometer = 0.386 $mile^2$

Volume

cubic inch = 16.39 cm^3
cubic foot = 0.0283 m^3
cubic yard = 0.7645 m^3
acre-ft = 1233.5 m^3
U. S. gal = 3.79 ℓ
U. K. gal = 4.55 ℓ
cubic centimeter = 0.061 $in.^3$
cubic meter = 1.307 yd^3
liter = 0.26 U. S. gal = 0.22 U. K. gal

Mass

ounce (avoirdupois) = 28.35 g
pound (avoirdupois) = 0.4536 kg
ton (short, 2000 lb) = 907.185 kg
ton (long, 2240 lb) = 1016.05 kg
gram = 0.0352 oz
kilogram = 2.2 lb

Pressure

pound per square inch = 6894.757 Pa
pound per square foot = 47.88026 Pa
atmosphere = 1 kg/cm^2
kilogram per square centimeter = 14.697 psi

Velocity

inch per second = 2.54 cm/sec
foot per second = 0.3048 m/sec
centimeter per second = 0.394 in./sec
meter per second = 1.093 yd/sec

Power

1 horsepower = 0.7457 kw
1 Btu (Int. Table) = 1055.056 joules
1 kilowatt = 1.341 hp

Miscellaneous

1 cubic foot per second = 28.3 ℓ/sec
1 mgd (U. S.) = 3780 m^3/day
1 mgd (U. K.) = 4550 m^3/day
pound per cubic foot = 16.0185 kg/m^3
milligram per liter = 0.000138 oz/gal (U. S.)
centipoise = 0.001 Pa-sec
pound BOD/acre/day = 1.12 kg BOD/ha/day
degree Fahrenheit = 5/9 degree Celsius*

---

* To obtain Celsius (C) temperature readings from Fahrenheit (F) readings, use the following equation: $C = (5/9)(F - 32)$.

C-2. Physical Properties of Water.

Temperature °F	Specific Weight, γ, lb/ft^3	Density, ρ, slug/ft^3	Viscosity, $\mu \times 10^5$, lb-sec/ft^2	Kinematic Viscosity, $\nu \times 10^{-5}$, ft^2/sec	Surface Tension, σ, lb/ft	Vapor Pressure, p_v, psia
32	62.42	1.940	3.746	1.931	0.00518	0.09
40	62.43	1.940	3.229	1.664	0.00514	0.12
50	62.41	1.940	2.735	1.410	0.00509	0.18
60	62.37	1.938	2.359	1.217	0.00504	0.26
70	62.30	1.936	2.050	1.059	0.00498	0.36
80	62.22	1.934	1.799	0.930	0.00492	0.51
90	62.11	1.931	1.595	0.826	0.00486	0.70
100	62.00	1.927	1.424	0.739	0.00480	0.95

C-3. Dissolved-Oxygen Solubility Data.

Temperature °C	Dissolved Oxygen, mg/ℓ — Chloride Concentration, mg/ℓ: 0	5,000	10,000	15,000	20,000
0	14.62	13.79	12.97	12.14	11.32
1	14.23	13.41	12.61	11.82	11.03
2	13.84	13.05	12.28	11.52	10.76
3	13.48	12.72	11.98	11.24	10.50
4	13.13	12.41	11.69	10.97	10.25
5	12.80	12.09	11.39	10.70	10.01
6	12.48	11.79	11.12	10.45	9.78
7	12.17	11.51	10.85	10.21	9.57
8	11.87	11.24	10.61	9.98	9.36
9	11.59	10.97	10.36	9.76	9.17
10	11.33	10.73	10.13	9.55	8.98
11	11.08	10.49	9.92	9.35	8.80
12	10.83	10.28	9.72	9.17	8.62
13	10.60	10.05	9.52	8.98	8.46
14	10.37	9.85	9.32	8.80	8.30

(Continued)

Temperature °C	Dissolved Oxygen, mg/ℓ — Chloride Concentration, mg/ℓ 0	5,000	10,000	15,000	20,000
15	10.15	9.65	9.14	8.63	8.14
16	9.95	9.46	8.96	8.47	7.99
17	9.74	9.26	8.78	8.30	7.84
18	9.54	9.07	8.62	8.15	7.70
19	9.35	8.89	8.45	8.00	7.56
20	9.17	8.73	8.30	7.86	7.42
21	8.99	8.57	8.14	7.71	7.28
22	8.83	8.42	7.99	7.57	7.14
23	8.68	8.27	7.85	7.43	7.00
24	8.53	8.12	7.71	7.30	6.87
25	8.38	7.96	7.56	7.15	6.74
26	8.22	7.81	7.42	7.02	6.61
27	8.07	7.67	7.28	6.88	6.49
28	7.92	7.53	7.14	6.75	6.37
29	7.77	7.39	7.00	6.62	6.25
30	7.63	7.25	6.86	6.49	6.13

C-4. Chemical Elements and Substances.

Element	Symbol	Atomic Number	Atomic Weight	Valence
Aluminum	Al	13	26.98	3
Bromine	Br	35	79.92	1,3,5,7
Calcium	Ca	20	40.08	2
Carbon	C	6	12.01	2,4
Chlorine	Cl	17	35.46	1,3,5,7
Chromium	Cr	24	52.01	2,3,6
Cobalt	Co	27	58.94	2,3
Copper	Cu	29	63.54	1,2
Fluorine	F	9	19.00	1
Hydrogen	H	1	1.008	1
Iodine	I	53	126.92	1,3,5,7
Iron (Ferrum)	Fe	26	55.85	2,3

(Continued)

Element	Symbol	Atomic Number	Atomic Weight	Valence
Lead (Plumbum)	Pb	82	207.21	2,4
Magnesium	Mg	12	24.32	2
Manganese	Mn	25	54.93	2,3,4,6,7
Mercury (Hydragyrum)	Hg	80	200.61	1,2
Nickel	Ni	28	58.69	2,3
Nitrogen	N	7	14.01	3,5
Oxygen	O	8	16.00	2
Phosphorus	P	15	30.98	3,5
Platinum	Pt	78	195.23	2,4
Potassium (Kalium)	K	19	39.10	1
Silicon	Si	14	28.09	4
Silver (Argentum)	Ag	47	107.88	1
Sodium (Natrium)	Na	11	23.00	1
Strontium	Sr	38	87.63	2
Sulfur	S	16	32.07	2,4,6
Tin (Stannum)	Sn	50	118.70	2,4
Zinc	Zn	30	65.38	2

C-5. Specific Weight (at Standard Temperature and Pressure).

Substance	Specific Weight	Density
Water	1.00	62.43
Salt water	1.02	64
Ice	0.91	57.5
Snow	0.40	25
Gasoline	0.70	44
Diesel oil	0.90	56
Wood	0.68	42
Feces	1.02	64
Dust (loose)	1.20	75
Earth (loose)	1.60	100
Sand	2.80	175

1 cu ft of water = 62.43 lb
1 gal of water (U. S.) = 8.34 lb
1 m^3 of air = 1.2 kg
1 kg/ℓ = 62.43 lbs/cu ft
1 lb/cu ft = 16.02 kg/m^3
= 0.012 tons long/cu yd

GLOSSARY

absorption -- The taking up of one substance into the body of another.

acid -- (1) A substance that tends to lose a proton. (2) A substance that dissolves in water with the formation of hydrogen ions. (3) A substance containing hydrogen which may be replaced by metals to form salts.

acidity -- The quantitative capacity of aqueous solutions to react with hydroxyl ions. It is measured by titration with a standard solution of a base to a specified end point. Usually expressed as milligrams per liter of calcium carbonate.

activated carbon -- Carbon particles usually obtained by carbonization of cellulosic material in the absence of air and possessing a high adsorptive capacity.

activated sludge -- Sludge floc produced in raw or settled wastewater by the growth of zoogleal bacteria and other organisms in the presence of dissolved oxygen and accumulated in sufficient concentration by returning floc previously formed.

activated sludge loading -- The pounds of biochemical oxygen demand (BOD) in the applied liquid per unit volume of aeration capacity or per pound of activated sludge per day.

activated sludge process -- A biological wastewater treatment process in which a mixture of wastewater and activated sludge is agitated and aerated. The activated sludge is subsequently separated from the treated wastewater (mixed liquor) by sedimentation and wasted or returned to the process as needed.

adsorption -- (1) The adherence of a gas, liquid, or dissolved material on the surface of a solid. (2) A change in concentration of gas or solute at the interface of a two-phase system. Should not be confused with absorption.

advanced wastewater treatment -- Those processes that achieve pollutant reductions by methods other than those used in conventional treatment (sedimentation, activated sludge, trickling filter, etc). It employs a number of different unit operations, including lagoons, post-aeration, microstraining, filtration, carbon adsorption, membrane solids separation, phosphorus removal, and nitrogen removal.

aerated contact bed -- A biological unit consisting of stone, cement-asbestos, or other surfaces supported in an aeration tank, in which air is diffused up and around the surfaces and settled wastewater flows through the tank. Also called contact aerator.

aerated pond -- A natural or artificial wastewater treatment pond in which mechanical or diffused-air aeration is used to supplement the oxygen supply. See oxidation pond.

aeration -- (1) The bringing about of intimate contact between air and a liquid by one or more of the following methods: (a) spraying the liquid in the air, (b) bubbling air through the liquid, (c) agitating the liquid to promote surface absorption of air. See following terms modifying aeration: diffused-air, mechanical, modified, spiral-flow, step.

aeration period -- (1) The theoretical time, usually expressed in hours, during which mixed liquor is subjected to aeration in an aeration tank while undergoing activated sludge treatment. It is equal to the volume of the tank divided by the volumetric rate of flow of the wastewater and return sludge. (2) The theoretical time during which water is subjected to aeration.

aeration tank -- A tank in which sludge, wastewater, or other liquid is aerated.

aerator -- A device that promotes aeration.

aerobic -- Requiring, or not destroyed by, the presence of free elemental oxygen.

aerobic bacteria -- Bacteria that require free elemental oxygen for their growth.

aerobic digestion -- Digestion of suspended organic matter by means of aeration. See digestion.

agglomeration -- The coalescence of dispersed suspended matter into larger flocs or particles which settle rapidly.

agitator -- (1) Mechanical apparatus for mixing and/or aerating. (2) A device for creating turbulence.

air -- The mixture of gases that surrounds the earth and forms its

atmosphere, composed primarily of oxygen and nitrogen. It also contains carbon dioxide, some water vapor, argon, and traces of other gases.

algae -- Primitive plants, one- or many-celled, usually aquatic, and capable of elaborating their foodstuffs by photosynthesis.

alkali -- Any of certain soluble salts, principally sodium, potassium, magnesium, and calcium, that have the property of combining with acids to form neutral salts and may be used in chemical processes such as water or wastewater treatment.

alkaline -- The condition of water, wastewater, or soil which contains a sufficient amount of alkali substances to raise the pH above 7.0.

alkalinity -- The capacity of water to neutralize acids, a property imparted by the water's content of carbonates, bicarbonates, hydroxides, and occasionally borates, silicates, and phosphates. It is expressed in milligrams per liter of equivalent calcium carbonate.

alum -- A common name, in the water and wastewater treatment field, for commercial-grade aluminum sulfate.

aluminum sulfate -- A chemical, formerly sometimes called "waterworks alum" in water or wastewater treatment, prepared by combining a mineral known as bauxite with sulfuric acid.

ammonia -- A chemical combination of hydrogen (H) and nitrogen (N) occurring extensively in nature. The combination used in water and wastewater engineering is expressed as NH_3.

ammonia stripping -- A modification of the aeration process for removing gases in water. Ammonium ions in wastewater exist in equilibrium with ammonia and hydrogen ions. As pH increases, the equilibrium shifts to the right, and above pH 9 ammonia may be liberated as a gas by agitating the wastewater in the presence of air. This is usually done in a packed tower with an air blower.

ammonification -- Bacterial decomposition of organic nitrogen to ammonia.

anaerobic -- Requiring, or not destroyed by, the absence of air or free elemental oxygen.

anaerobic bacteria -- Bacteria that grow only in the absence of free elemental oxygen.

anaerobic contact process -- An anaerobic waste treatment process in which the microorganisms responsible for waste stabilization are removed from the treated effluent stream by sedimentation or other means and held in or returned to the process to enhance the rate of treatment.

anaerobic denitrification -- A means to remove nitrates from wastewaters, especially irrigation return waters that may be high in nitrates and low in organics. In this method, an organic chemical such as methanol, ethanol, acetone, or acetic acid is added as a carbon source and the waste is placed in an anaerobic environment. Under these conditions, nitrate will be reduced by denitrifying bacteria to nitrogen gas and some nitrous oxide, which escapes to the atmosphere. With methanol, the chemistry can be represented as:

$$6H^+ + 6NO_3^- + 5CH_3OH \qquad 5CO_2 + 3N_2 + 13H_2O$$

anaerobic digestion -- The degradation of organic matter brought about through the action of microorganisms in the absence of elemental oxygen.

anaerobic digestion of sewage solids -- The first stage of the digestion is characterized by the production of organic acids. Proteins, carbohydrates, and fats are decomposed by the anaerobic bacteria, and the products of the decomposition are organic acids. This digestion stage is evident in sludge by a lowering of the pH and the presence of a disagreeable sour odor. Unless the amount of acid produced is excessive, the digestion will normally proceed to the second stage. With excess acidity, such as is obtained when the addition of fresh solids is too rapid, the bacteria will be destroyed and the process will end with the first stage. The second stage is characterized by liquefaction of sewage solids under mildly acid conditions. The bacteria, by enzyme action, convert the insoluble solids material to the soluble form. This is in accordance with the requirements of the bacterial cells that all food material must be in solution before it can pass through the cell wall. The third stage of digestion is characterized by production of gases, carbon dioxide, methane, and hydrogen sulfide, as well as an increase of pH and the production of carbonate salts.

anaerobic waste treatment -- Waste stabilization brought about through

the action of microorganisms in the absence of air or elemental oxygen. Usually refers to waste treatment by methane fermentation.

anion -- A negatively charged ion in an electrolyte solution, attracted to the anode under the influence of electric potential.

anthracite -- Coal

available dilution -- The ratio of the quantity of untreated wastewater or partly or completely treated effluent to the average quantity of diluting water available, effective at the point of disposal or at any point under consideration; usually expressed in percentage. Also called dilution factor.

average daily flow -- The total quantity of liquid tributary to a point divided by the number of days of flow measurement.

average flow -- Arithmetic average of flows measured at a given point.

backwash -- The reversal of flow through a rapid sand filter to wash clogging material out of the filtering medium and reduce conditions causing loss of head.

backwash bed expansion -- The expansion that occurs when a filter bed is being backwashed, usually expressed as a percentage of the backwashed and settled bed.

backwashing -- The operation of cleaning a filter by reversing the flow of liquid through it and washing out matter previously captured in it. Filters would include true filters such as sand and diatomaceous-earth types but not other treatment units such as trickling filters.

bacteria -- A group of universally distributed, rigid, essentially unicellular microscopic organisms lacking chlorophyll. Bacteria usually appear as spheroid, rodlike, or curved entities, but occasionally appear as sheets, chains, or branched filaments. Bacteria are usually regarded as plants.

bacteria -- See following terms modifying <u>bacteria</u>: aerobic, anaerobic, facultative anaerobic.

baffles -- Deflector vanes, guides, grids, gratings, or similar devices constructed or placed in flowing water, wastewater, or slurry systems to check or effect a more uniform distribution of velocities; absorb energy; divert, guide, or agitate the liquids; and check eddies.

bar screen -- In a waste-treatment plant, a screen that removes large suspended solids.

basin -- (1) A natural or artificially created space or structure, surface or underground, which has a shape and character of confining material that enable it to hold water. The term is sometimes used for a receptacle midway in size between a reservoir and a tank. (2) The surface area within a given drainage system. (3) A small area in an irrigated field or plot surrounded by low earth ridges and designed to hold irrigation water. (4) An area upstream from a subsurface or surface obstruction to the flow of water. (5) A shallow tank or depression through which liquids may be passed or in which they are detained for treatment or storage. Also see tank.

bed -- The bottom of a watercourse or any body of water.

bed density, backwashed and drained (granular carbon adsorption) -- The weight per unit volume on a dry basis of a bed of activated carbon that has been backwashed and drained. This value is usually lower than the corresponding apparent density due to the classification according to size of the carbon granules during backwashing.

bed depth (height) -- (1) The depth of carbon, expressed in length units, which is parallel to the flow of the stream and through which the stream must pass. (2) The depth of the ion exchange resin in an ion exchange column.

bed diameter -- The diameter of a cylindrical carbon column or ion exchange column, measured perpendicular to the stream flow.

bed expansion -- The separation and rise of ion exchange resin particles in an ion exchange column during backwashing.

biochemical action -- Chemical change resulting from the metabolism of living organisms.

biochemical oxygen demand -- A standard test used in assessing wastewater strength. See BOD.

biodegradation (biodegradability) -- The destruction or mineralization of either natural or synthetic organic materials by the microorganisms populating soils, natural bodies of water, or wastewater treatment systems.

biological filter -- A bed of sand, gravel, broken stone, or other

medium through which wastewater flows or trickles that depends on biological action for its effectiveness.

biological filtration -- The process of passing a liquid through the medium of a biological filter, thus permitting contact with attached zoogleal films that adsorb and absorb fine suspended, colloidal, and dissolved solids and release end products of biochemical action.

biologically active floc -- Floc formed by the action of biological agencies; for example, activated sludge.

biological oxidation -- The process whereby living organisms in the presence of oxygen convert the organic matter contained in wastewater into a more stable or a mineral form.

biological process -- (1) The process by which the life activities of bacteria and other microorganisms, in the search for food, break down complex organic materials into simple, more stable substances. Self-purification of polluted streams, sludge digestion, and all the so-called secondary wastewater treatments result from this process. (2) Process involving living organisms and their life activities. Also called biochemical process.

biological purification -- The process whereby living organisms convert the organic matter contained in wastewater into a more stable or a mineral form.

biological slime -- The gelatinous film of zoogleal growths covering the medium or spanning the interstices of a biological bed. Also called microbial film.

biological treatment systems -- "Living" systems which rely on mixed biological cultures to break down waste organics and remove organic matter from solution.

biological wastewater treatment -- Forms of wastewater treatment in which bacterial or biochemical action is intensified to stabilize, oxidize, and nitrify the unstable organic matter present. Intermittent sand filters, contact beds, trickling filters, and activated sludge processes are examples.

BOD -- (1) Abbreviation for biochemical oxygen demand. The quantity of oxygen used in the biochemical oxidation of organic matter in a specified time, at a specified temperature, and under specified conditions. (2) A standard test used in assessing wastewater strength.

BOD load -- The BOD content of wastewater passing into a waste treatment system or to a body of water, usually expressed in pounds per unit of time.

breakpoint chlorination -- Addition of chlorine to water or wastewater until the chlorine demand has been satisfied and further additions result in a residual that is directly proportional to the amount added beyond the breakpoint.

buffer -- Any of certain combinations of chemicals used to stabilize the pH values or alkalinities of solutions.

cake -- Solids deposited on the filter medium.

cake compressibility factor -- Also known as the coefficient of compressibility. An empirically derived factor relating specific resistance of sludge cake to filtering pressure (dimensionless).

cake solids -- Percent dry solids in wet cake discharged from a dewatering device. As commonly reported, this includes the weight of sludge conditioning chemicals which may comprise 5 to 15 percent of the dry sludge solids.

calcium hypochlorite -- A dry powder consisting of lime and chlorine combined in such a way that, when dissolved in water, it releases active chlorine.

carbonate hardness -- Hardness caused by the presence of carbonates and bicarbonates of calcium and magnesium in water. Such hardness may be removed to the limit of solubility by boiling the water. When the hardness is numerically greater than the sum of the carbonate alkalinity and the bicarbonate alkalinity, that amount of hardness which is equivalent to the total alkalinity is called carbonate hardness. See hardness.

cation -- The ion in an electrolyte which carries the positive charge and which migrates toward the cathode under the influence of a potential difference.

centrate -- The effluent or liquid portion of a sludge removed by or discharged from a centrifuge.

centrifugal dewatering of sludge -- The partial removal of water from wastewater sludge by centrifugal action.

centrifugal drying -- The partial drying of industrial waste sludge or wastewater by centrifugal action.

centrifuge -- A mechanical device in which centrifugal force is used to separate solids from liquids and/or to separate liquids of different densities.

channel -- A perceptible natural or artificial waterway which periodically or continuously contains moving water or which forms a connecting link between two bodies of water. It has a definite bed and banks which confine the water.

chemical coagulation -- The destabilization and initial aggregation of colloidal and finely divided suspended matter by the addition of a floc-forming chemical. See flocculation.

chemical dose -- The application of a specific quantity of chemical to a specific quantity of fluid for a specific purpose. See dose.

chemical feeder -- A device for dispensing a chemical at a predetermined rate for the treatment of water or wastewater. Change in rate of feed may be affected manually or automatically by flow-rate changes. Feeders are designed for solids, liquids, or gases.

chemical oxygen demand (COD) -- A measure of the oxygen-consuming capacity of inorganic and organic matter present in water or wastewater. It is expressed as the amount of oxygen consumed from a chemical oxidant in a specific test. It does not differentiate between stable and unstable organic matter and thus does not necessarily correlate with biochemical oxygen demand. Also known as OC and DOC, oxygen consumed and dichromate oxygen consumed, respectively.

chemical precipitation -- (1) Precipitation induced by addition of chemicals. (2) The process of softening water by the addition of lime or lime and soda ash as the precipitants.

chemical sludge -- Sludge obtained by treatment of wastewater with chemicals.

chemical toilet -- (1) A commode chair in which a pail containing a chemical solution for deodorizing and liquefying fecal matter is placed immediately beneath the seat. (2) A nonwater-carriage toilet arranged to discharge fecal matter directly into a deodorizing and liquefying chemical solution contained in a watertight tank.

chemical treatment -- Any process involving the addition of chemicals to obtain a desired result.

chlorination -- The application of chlorine to water or wastewater, generally for the purpose of disinfection, but frequently for accomplishing other biological or chemical results.

chlorination chamber -- A detention basin provided primarily to secure the diffusion of chlorine through the liquid. Also called chlorine contact chamber.

chlorine -- An element ordinarily existing as a greenish-yellow gas about 2.5 times as heavy as air. At atmospheric pressure and a temperature of -30.1°F, the gas becomes an amber liquid about 1.5 times as heavy as water. The chemical symbol of chlorine is Cl, its atomic weight is 35.457, and its molecular weight is 70.914.

chlorine contact chamber -- A detention basin provided primarily to secure the diffusion of chlorine through the liquid. Also called chlorination chamber.

chlorine demand -- The difference between the amount of chlorine added to the wastewater and the amount of residual chlorine remaining at the end of a specific contact time. The chlorine demand for given water varies with the amount of chlorine applied, time of contact, temperature, pH, nature, and amount of impurities in the water.

chlorine residual -- The total amount of chlorine (combined and free available chlorine) remaining in water, sewage, or industrial wastes at the end of a specified contact period following chlorination.

clarification -- Any process or combination of processes which reduce the concentration of suspended matter in a liquid.

clarified wastewater -- Wastewater from which most of the settleable solids have been removed by sedimentation. Also called settled wastewater.

clarifier -- A unit which secures clarification. Usually applied to sedimentation tanks or basins. See sedimentation tank.

coagulant -- A chemical added to wastewater or sludge to promote agglomeration and flocculation of suspended solids to induce faster

settling or more efficient filtration. Typical coagulants are polyelectrolytes, alum, and ferric chloride.

coagulation -- In water and wastewater treatment, the destabilization and initial aggregation of colloidal and finely divided suspended matter by the addition of a floc-forming chemical or by biological processes.

coagulation basin -- A basin used for the coagulation of suspended or colloidal matter, with or without the addition of a coagulant, in which the liquid is mixed gently to induce agglomeration with a consequent increase in settling velocity of particulates.

coarse screen -- Coarse or large screens have openings that range from 1.5 to 6 inches. They protect pumps, tanks, automatic dosing devices, conduits, and valves from large objects such as pieces of timber.

COD -- Symbol for chemical oxygen demand. See chemical oxygen demand.

colloidal matter -- Finely divided solids which will not settle but may be removed by coagulation or biochemical action or membrane filtration. See colloids.

colloids -- (1) Finely divided solids which will not settle but may be removed by coagulation or biochemical action or membrane filtration; they are intermediate between true solutions and suspensions. (2) In soil physics, discrete mineral particles less than 2 microns (μ) in diameter. (3) Finely divided dispersions of one material, called the dispersed phase; with another, called the dispersion medium. (4) In general, particles of colloidal dimensions are approximately 10 A to 1 μ in size. Colloidal particles are distinguished from ordinary molecules by their inability to diffuse through membranes that allow ordinary molecules and ions to pass freely.

color -- Colors in water are usually due to decomposition of organic matter of vegetable or soil origin. Color caused by suspended matter is referred to as "apparent color"; color due to colloid vegetable or organic extracts is called "true color."

combined residual chlorination -- The application of chlorine to water or wastewater to produce, with the natural or added ammonia or with certain organic nitrogen compounds, a combined chlorine residual.

combined wastewater -- A mixture of surface runoff and other wastewater such as domestic or industrial wastewater.

comminuted solids -- Solids which have been divided into fine particles.

comminuting screen -- A mechanically operated device for screening wastewater and cutting the screenings into particles sufficiently fine to pass through the screen openings.

comminution -- The process of cutting and screening solids contained in wastewater flow before it enters the flow pumps or other units in the treatment plant.

comminutor -- A device for catching and shredding heavy solid matter in the primary stage of waste treatment.

concentrate -- To increase the proportion of solids in a sludge or wastewater.

concentration -- (1) The amount of a given substance dissolved in a unit volume of solution. (2) The process of increasing the dissolved solids per unit volume of solution, usually by evaporation of the liquid.

concentration tank -- A settling tank of relatively short detention period in which sludge is concentrated by sedimentation or flotation before treatment, dewatering, or disposal. See sedimentation tank.

concentrator -- A solids contact unit used to decrease water content of sludge or slurry.

conduit -- Any artificial or natural duct, either open or closed, for conveying liquids or possibly other fluids.

contact aerator -- A biological unit consisting of stone, cement-asbestos, or other surfaces supported in an aeration tank, in which air is diffused up and around the surfaces and settled wastewater flows through the tank.

contact bed -- (1) An artificial bed of coarse material providing extensive surface area for biological growth in a watertight basin. Wastewater exposure to the surface may be accomplished by cycling or by continuous flow through controlled inlet and outlet. (2) An early type of wastewater filter consisting of a bed of coarse broken

stone or similar inert material placed in a watertight tank or basin which can be completely filled with wastewater and then emptied. Operation consists of filling, allowing the contents to remain for a short time, draining, and then allowing the bed to rest. The cycle is then repeated. A precursor to the trickling filter.

contact stabilization process -- A modification of the activated sludge process in which raw wastewater is aerated with a high concentration of activated sludge for a short period, usually less than 60 min, to obtain BOD removal by absorption. The solids are subsequently removed by sedimentation and transferred to a stabilization tank where aeration is continued further to oxidize and condition them before their reintroduction to the raw wastewater flow.

contact tank -- A tank used in water or wastewater treatment to promote contact between treatment chemicals or other materials and the body of liquid treated.

current -- (1) The flowing of water or other fluid. (2) That portion of a stream of water which is moving with a velocity much greater than the average or in which the progress of the water is principally concentrated.

cycle -- Filtration interval: length of time filter operates before cleaning.

dechlorination -- The partial or complete reduction of residual chlorine in a liquid by any chemical or physical process.

decomposition -- The breakdown of complex material into simpler substances by chemical or biological means.

decomposition of wastewater -- (1) The breakdown of organic matter in wastewater by bacterial action, either aerobic or anaerobic. (2) Transformation of organic or inorganic materials contained in wastewater through the action of chemical or biological processes.

defoamant -- A material having low compatibility with foam and a low surface tension. Defoamants are used to control, prevent, or destroy various types of foam, the most widely used being silicone defoamers. A droplet of silicone defoamant which contacts a bubble of foam will cause the bubble to undergo a local and drastic reduction in film strength, thereby breaking the film. Unchanged, the defoamant continues to contact other bubbles, thus breaking up the foam. A valuable property of most defoamants is their effectiveness in extremely

low concentration. In addition to silicones, defoamants for special purposes are based on polyamides, vegetable oils, and stearic acid.

defoaming agent -- A material having low compatibility with foam and a low surface tension. See defoamant.

denitrification -- (1) Chemically bound oxygen in the form of either nitrates or nitrites is stripped away for use by microorganisms. This produces nitrogen gas which can bring up floc in the final sedimentation process. It is an effective method of removing nitrogen from wastewater. (2) A biological process in which gaseous nitrogen is produced from nitrite and nitrate.

depth of side water -- The depth of a liquid measured along the inside of the vertical exterior wall of a tank.

detention time -- The theoretical time required to displace the contents of a tank or unit at a given rate of discharge (volume divided by rate of discharge).

dewatering -- Any process of water removal or concentration of a sludge slurry, as by filtration, centrifugation, or drying. (A dewatering method is any process which will concentrate the sludge solids to at least 15 percent solids by weight.)

diatomaceous earth -- A fine, siliceous earth consisting mainly of the skeletal remains of diatoms (unicellular organisms).

diatomaceous-earth filter -- A filter used in water treatment in which a built-up layer of diatomaceous earth serves as the filtering medium.

diffused air -- A technique by which air under pressure is forced into sewage in an aeration tank. The air is pumped down into the sewage through a pipe and escapes out through holes in the side of the pipe.

diffused-air aeration -- Aeration produced in a liquid by air passed through a diffuser.

diffusion aerator -- An aerator that blows air under low pressure through submerged porous plates, perforated pipes, or other devices so that small air bubbles rise through the water or wastewater continuously.

digested sludge -- Sludge digested under either aerobic or anaerobic conditions until the volatile content has been reduced to the point at which the solids are relatively nonputrescible and inoffensive.

digester -- A tank in which sludge is placed to permit digestion to occur. Also called sludge digestion tank. See sludge digestion.

digestion -- (1) The biological decomposition of organic matter in sludge, resulting in partial gasification, liquefaction, and mineralization. (2) The process carried out in a digester. See sludge digestion.

digestion chamber -- A sludge-digestion tank. Frequently refers specifically to the lower or sludge-digestion compartment of an Imhoff tank.

digestion of sludge -- Takes place in heated tanks where the material can decompose naturally and the odors can be controlled.

digestion tank -- A tank in which sludge is placed to permit digestion to occur. See sludge digestion.

diluent -- A diluting agent.

dilution -- Disposal of wastewater or treated effluent by discharging it into a stream or body of water.

discharge -- (1) As applied to a stream or conduit, the rate of flow or volume of water flowing in the stream or conduit at a given place and within a given period of time. (2) The passing of water or other liquid through an opening or along a conduit or channel. (3) The rate of flow of water, silt, or other mobile substance which emerges from an opening, pump, or turbine, or passes along a conduit or channel, usually expressed as cubic feet per second, gallons per minute, or million gallons per day.

disinfectant -- A substance used for disinfection.

disinfected wastewater -- Wastewater to which chlorine or other disinfecting agents has been added, during or after treatment, to destroy pathogenic organisms.

disinfection -- The killing of the larger portion of microorganisms in or on a substance with the probability that all pathogenic bacteria are killed by the agent used.

disk screen -- A screen in the form of a circular disk which rotates about a central axis perpendicular to its plane.

dissolved air flotation -- A process that adds energy in the form of air

bubbles, which become attached to suspended sludge particles, increasing the buoyancy of the particles and producing more positive flotation.

dissolved oxygen (DO) -- The oxygen dissolved in water, wastewater, or other liquid, usually expressed in milligrams per liter, parts per million, or percent of saturation.

dissolved solids -- Theoretically, the anhydrous residues of the dissolved constituents in water. Actually, the term is defined by the method used in determination. In water and wastewater treatment the Standard Methods tests are used.

ditch -- A small artificial open channel or waterway constructed through earth or rock to convey water.

ditch oxidation -- A modification of the activated sludge process or the aerated pond, in which the mixture under treatment is circulated in an endless ditch and aeration and circulation are produced by a mechanical device such as a Kessener brush.

domestic wastewater -- Wastewater derived principally from dwellings, business buildings, institutions, and the like. It may or may not contain groundwater, surface water, or storm water.

dose -- (1) The quantity of substance applied to a unit quantity of liquid for treatment purposes. It can be expressed in terms of either volume or weight, e.g., pounds per million gallons, parts per million, grains per gallon, milligrams per liter, or grams per cubic meter. (2) Generally, a quantity of material applied to obtain a specific effect.

drum screen -- A screen in the form of a cylinder or truncated cone which rotates on its axis.

drying bed -- A wastewater treatment unit usually containing a bed of sand on which sludge is placed to dry by evaporation and drainage.

dumping -- A method for solid waste disposal.

effective size -- The diameter of the particles, spherical in shape, equal in size, and arranged in a given manner, of a hypothetical sample of granular material that would have the same transmission constant as the actual material under consideration.

efficiency -- (1) The relative results obtained in any operation in relation to the energy or effort required to achieve such results. (2) The ratio of the total output to the total input, expressed as a percentage.

effluent -- (1) A liquid which flows out of a containing space. (2) Wastewater or other liquid, partially or completely treated, or in its natural state, flowing out of a reservoir, basin, treatment plant, or industrial treatment plant, or part thereof.

effluent stream -- A stream or stretch of stream which receives water from groundwater in the zone of saturation. The water surface of such a stream stands at a lower level than the water table or piezometric surface of the groundwater body from which it receives water.

endogenous respiration -- An auto-oxidation of cellular material, which takes place in the absence of assimilable organic material, to furnish energy required for the replacement of protoplasm.

environment -- The physical environment of the world consisting of the atmosphere, the hydrosphere, and the lithosphere.

environmental pollution -- The presence of any foreign substance or interference (organic, inorganic, radiological, acoustic, or biological) in the environment (water, air, or land) which tends to degrade its quality so as to constitute a hazard or impair the usefulness of environmental resources.

equalization -- A process by which variations in flow and composition of a waste stream are averaged in an equalizing unit.

equalizing basin -- A holding basin in which variations in flow and composition of a liquid are averaged. Also called balancing reservoir.

eutrophication -- (1) The normally slow aging process by which a lake evolves into marsh and ultimately becomes completely filled with detritus and disappears. (2) The intentional or unintentional enrichment of water.

evaporation -- (1) The process by which water becomes a vapor at a temperature below the boiling point. (2) The quantity of water that is evaporated; the rate is expressed in depth of water, measured as liquid water, removed from a specified surface per unit of time, generally in inches or centimeters per day, month, or year.

evaporation rate -- The quantity of water, expressed in terms of depth of liquid water, evaporated from a given water surface per unit of time. It is usually expressed in inches depth per day, month, or year.

evapotranspiration -- Water withdrawn from soil by evaporation and/or plant transpiration. Considered synonymous with consumptive use.

evapotranspiration potential -- Water loss that would occur if there never was a deficiency of water in the soil for use by vegetation.

evapotranspiration tank -- A tank, filled with soil and provided with a water supply, in which representative plants are grown to determine the amount of water transpired and evaporated from the soil under observed climatic conditions. Sometimes improperly referred to as lysimeter.

excess sludge -- The sludge produced in an activated sludge treatment plant that is not needed to maintain the process and is withdrawn from circulation.

extended aeration -- A modification of the activated sludge process which provides for aerobic sludge digestion within the aeration system. The concept envisages the stabilization of organic matter under aerobic conditions, disposal of the end products into the air as gases, with the plant effluent in the form of finely divided suspended and soluble matter.

facultative anaerobic bacteria -- Bacteria which can adapt to growth in the presence, as well as in the absence, of oxygen. May be referred to as facultative bacteria.

ferric chloride -- A chemical ($FeCl_3$) often used for sludge conditioning.

filter -- A device or structure for removing solid or colloidal material, usually of a type that cannot be removed by sedimentation, from water, wastewater, or other liquid. The liquid is passed through a filtering medium, usually a granular material but sometimes finely woven cloth, unglazed porcelain, or specially prepared paper. There are many types of filters used in water or wastewater treatment. See trickling filter.

filter bed -- (1) A type of bank revetment consisting of layers of filtering medium of which the particles gradually increase in size from

the bottom upward. Such a filter allows the groundwater to flow freely, but it prevents even the smallest soil particles from being washed out. (2) A tank for water filtration having a false bottom covered with sand, as a rapid sand filter. (3) A pond with sand bedding, as a sand filter or slow sand filter.

filter cake -- The dewatered sludge discharged from the filter, containing 65 to 80 percent moisture, depending upon the type of sludge, the type of dewatering equipment, and the conditioning of the sludge.

filter cloth -- A fabric stretched around the drum of a vacuum filter.

filtered wastewater -- Wastewater that has passed through a mechanical filtering process but not through a trickling filter bed.

filter efficiency -- The operating results from a filter as measured by various criteria such as percentage reduction in suspended matter, total solids, biochemical oxygen demand, bacteria, color.

filtering medium -- (1) Any material through which water, wastewater, or other liquid is passed for the purpose of purification, treatment, or conditioning. (2) A cloth or metal material of some appropriate design used to intercept sludge solids in sludge filtration.

filter leaf -- A laboratory device for testing potential performance of a vacuum filter on a sludge.

filter loading -- Organically, the pounds of biochemical oxygen demand (BOD) in the applied liquid per unit of filter bed area or volume per day. Hydraulically, the quantity of liquid applied per unit of filter bed area or volume per day.

filter rate -- The rate of application of material to some process involving filtration, for example, application of wastewater sludge to a vacuum filter, wastewater flow to a trickling filter, water flow to a rapid sand filter.

filter run -- (1) The interval between the cleaning and washing operations of a rapid sand filter. (2) The interval between the changes of the filter medium on a sludge-dewatering filter.

filter underdrains -- A system of underdraining for collecting water that has passed through a sand filter or biological bed.

filter wash -- The reversal of flow through a rapid sand filter to wash

clogging material out of the filtering medium and reduce conditions causing loss of head. See backwash.

filtrate -- The liquid which has passed through a filter.

filtration -- The process of passing a liquid through a filtering medium (which may consist of granular material, such as sand, magnetite, or diatomaceous earth, finely woven cloth, unglazed porcelain, or specially prepared paper) for the removal of suspended or collodial matter.

filtration rate -- The rate of application of wastewater to a filter, usually expressed in million gallons per acre per day or gallons per minute per square foot.

final effluent -- The effluent from the final treatment unit of a wastewater treatment plant.

final sedimentation -- The separation of solids from wastewater in a final settling tank.

final sedimentation tank -- A tank through which the effluent from a trickling filter or an aeration or contact-aeration tank is passed to remove the settleable solids. Also called final settling basin. See sedimentation tank.

final settling tank -- A tank through which the effluent from a trickling filter or an aeration or contact-aeration tank is passed to remove the settleable solids. Also called final settling basin. See sedimentation tank.

fine screen -- A relative term, usually applied to screens with openings of less than 1 in., but in wastewater treatment often reserved for openings that may be 1/16 in.

five-day BOD -- That part of oxygen demand associated with biochemical oxidation of carbonaceous, as distinct from nitrogeneous, material. It is determined by allowing biochemical oxidation to proceed, under conditions specified in Standard Methods, for 5 days.

flash dryer -- A device for vaporizing water from partly dewatered and finely divided sludge through contact with a current of hot gas or superheated vapor. It includes a squirrel-cage mill for separating the sludge cake into fine particles.

flash mixer -- A device for quickly dispersing chemicals uniformly throughout a liquid.

floc -- Small gelatinous masses formed in a liquid by the reaction of a coagulant added thereto, through biochemical processes, or by agglomeration.

flocculating tank -- A tank used for the formation of floc by the gentle agitation of liquid suspensions, with or without the aid of chemicals.

flocculation -- In water and wastewater treatment, the agglomeration of colloidal and finely divided suspended matter after coagulation by gentle stirring by either mechanical or hydraulic means. In biological wastewater treatment where coagulation is not used, agglomeration may be accomplished biologically.

flocculation agent -- A coagulating substance which, when added to water, forms a flocculent precipitate which will entrain suspended matter and expedite sedimentation; examples are alum, ferrous sulfate, and lime.

flocculator -- (1) A mechanical device to enhance the formation of floc in a liquid. (2) An apparatus for the formation of floc in water and wastewater.

flotation -- The raising of suspended matter to the surface of the liquid in a tank as scum--by aeration, the evolution of gas, chemicals, electrolysis, heat, or bacterial decomposition--and the subsequent removal of the scum by skimming.

flowing-through time -- (1) The time required for a volume of liquid to pass through a basin, identified in terms of the characteristic being measured, such as mean time, modal time, minimum time. (2) The average time required for a small volume of liquid to pass through a basin from inlet to outlet.

flow rate -- The rate at which a substance is passed through a system.

flow regulator -- A structure installed in a canal, conduit, or channel to control the flow of water or wastewater at intake or to control the water level in a canal, channel, or treatment unit.

flume -- (1) An open conduit of wood, masonry, or metal constructed on a grade and sometimes elevated. Sometimes called aqueduct. (2) A

ravine or gorge with a stream running through it. (3) To transport in a flume, as logs.

foam -- (1) A collection of minute bubbles formed on the surface of a liquid by agitation, fermentation, etc. (2) The frothy substance composed of an aggregation of bubbles on the surface of liquids by violent agitation or by the admission of air bubbles to liquid containing surface-active materials, solid particles, or both.

foam separation -- The planned frothing of wastewater or wastewater effluent as a means of removing excessive amounts of detergent materials, through the introduction of air in the form of fine bubbles. Also called form fractionation.

food-to-microorganism ratio -- An aeration tank loading parameter.

gravity filter -- A rapid sand filter of the open type, the operating level of which is placed near the hydraulic grade line of the influent and through which the water flows by gravity.

grease -- In wastewater, a group of substances including fats, waxes, free fatty acids, calcium and magnesium soaps, mineral oils, and certain other nonfatty materials. The type of solvent and method used for extraction should be stated for quantitation.

grinding -- A process for solid waste handling and disposal by which refuse is reduced to less than 2 in. by a shredder. Also called shredding.

grit -- The heavy suspended mineral matter present in water or wastewater, such as sand, gravel, cinders.

grit chamber -- A detention chamber or an enlargement of a sewer designed to reduce the velocity of flow of the liquid to permit the separation of mineral from organic solids by differential sedimentation.

grit collector -- A device placed in a grit chamber to convey deposited grit to a point of collection.

groundwater -- Subsurface water occupying the saturation zone, from which wells and springs are fed. In a strict sense the term applies only to water below the water table. Also called phreatic water, plerotic water.

gutter -- An artifically surfaced, and generally shallow, waterway provided at the margin of a roadway for surface drainage.

halogen -- Any one of the chemically related elements--fluorine, chlorine, bromine, iodine, and astatine.

hardness -- A characteristic of water, imparted by salts of calcium, magnesium, and iron such as bicarbonates, carbonates, sulfates, chlorides, and nitrates, that causes curdling of soap and increased consumption of soap, deposition of scale in boilers, damage in some industrial processes, and sometimes objectionable taste. See carbonate hardness.

head loss -- The loss in liquid pressure resulting from the passage of the solution through a pipe, a channel, or a treatment unit.

heavy metals -- Metals that can be precipitated by hydrogen sulfide in acid solution, for example, lead, silver, gold, mercury, bismuth, copper.

high-rate digestion -- Accelerated anaerobic digestion resulting primarily from thorough mixing of digester contents. May be enhanced by thermophilic digestion.

high-rate filter -- A trickling filter operated at a high average daily dosing rate, usually between 10 and 40 mgd/acre including any recirculation of effluent.

horizontal-flow tank -- A tank or basin, with or without baffles, in which the direction of flow is horizontal.

humus sludge -- (1) Sludge deposited in final or secondary settling tanks following trickling filters or contact beds. (2) Sludge resembling humus in appearance.

hydraulic loading -- The flow (volume per unit time) applied to the surface area of the clarification or biological reactor units (where applicable).

hydraulic loss -- The loss of head attributable to obstructions, friction, changes in velocity, and changes in the form of the conduit.

hydraulic radius -- The right cross-sectional area of a stream of water divided by the length of that part of its periphery in contact with

its containing conduit; the ratio of area to wetted perimeter. Also called hydraulic mean depth.

hydraulic surface loading influent -- (1) The flow (volume per unit time) applied to a unit of surface area (square ft), applicable to trickling filter and filtration processes. (2) Wastewater or other liquid--raw or partially treated--flowing into a reservoir, basin, treatment process, or treatment plant.

impeller -- A rotating set of vanes designed to impel rotation of a mass of fluid.

impervious -- Not allowing, or allowing only with great difficulty, the movement of water; impermeable.

incineration -- Burning sludge to remove the water and reduce the remaining residues to a safe, nonburnable ash. The ash can then be disposed of safely on land, in some waters, or into caves or other underground locations.

industrial wastes -- The liquid wastes from industrial processes, as distinct from domestic or sanitary wastes.

industrial wastewater -- Wastewater in which industrial wastes predominate. See domestic wastewater, industrial wastes.

infiltrate -- (1) To filter into. (2) The penetration by a liquid or gas of the pores or interstices.

infiltration -- (1) The flow or movement of water through the interstices or pores of a soil or other porous medium. (2) The quantity of groundwater that leaks into a pipe through joints, porous walls, or breaks. (3) The entrance of water from the ground into a gallery. (4) The absorption of liquid by the soil, either as it falls as precipitation or from a stream flowing over the surface. See percolation.

influent -- Water, wastewater, or other liquid flowing into a reservoir, basin, or treatment plant, or any unit thereof.

inhibitory toxicity -- Any demonstrable inhibitory action of a substance on the rate of general metabolism (including rate of reproduction) of living organisms.

inorganic matter -- Chemical substances of mineral origin, or more correctly, not of basically carbon structure.

intake -- (1) The works or structures at the head of a conduit into which water is diverted. (2) The process or operation by which water is absorbed into the ground and added to the saturation zone.

interface -- (1) A stratum of water of varying thickness lying between the fresh water above and ocean water below in certain estuaries. (2) A boundary layer between two fluids such as liquid-liquid or liquid-gas.

intermediate screen -- A screen, with openings from 0.25 to 1.5 in., which prepares the waste flow for passage through grit chambers, primary sedimentation tanks, and reciprocating pumps.

intermediate treatment -- Wastewater-treatment such as aeration or chemical treatment, supplementary to primary treatment.

ion -- (1) A charged atom, molecule, or radical, the migration of which affects the transport of electricity through an electrolyte or, to a certain extent through a gas. (2) An atom or molecule that has lost or gained one or more electrons. By such ionization it becomes electrically charged. An example is the alpha particle.

ion exchange -- (1) A chemical process involving reversible interchange of ions between a liquid and a solid but no radical change in structure of the solid. (2) A chemical process in which ions from two different molecules are exchanged.

ion-exchange treatment -- The use of ion-exchange materials such as resin or zeolites to remove undesirable ions from a liquid and substitute acceptable ions.

irrigation -- The artificial application of water to lands to meet the water needs of growing plants not met by rainfall.

isotherm -- A line drawn through all points having the same temperature.

kinematic viscosity -- Ratio of absolute viscosity, expressed in poises (grams per centimeter second), to the density, in grams per cubic centimeter, at room temperature.

lagoon -- A pond containing raw or partially treated wastewater in which

aerobic or anaerobic stabilization occurs.

land disposal -- Disposal of wastewater onto land.

lime -- Any of a family of chemicals consisting essentially of calcium hydroxide made from limestone (calcite) which is composed almost wholly of calcium carbonate or a mixture of calcium and magnesium carbonate.

liquid -- A substance that flows freely. Characterized by free movement of the constituent molecules among themselves, but without the tendency to separate from one another characteristic of gases. Liquid and fluid are often used synonymously, but fluid has the broader significance, including both liquids and gases.

liquid sludge -- Sludge containing sufficient water (ordinarily more than 85 percent) to permit flow by gravity or pumping.

liquor -- Water, wastewater, or any combination; commonly used to designate liquid phase when other phases are present.

load -- See following terms modifying load: BOD, peak, pollutional.

loading -- The time rate at which material is applied to a treatment device involving length, area, or volume, or other design factor.

mechanical aeration -- (1) The mixing, by mechanical means, of wastewater and activated sludge in the aeration tank of the activated sludge process to bring fresh surfaces of liquid into contact with the atmosphere. (2) The introduction of atmospheric oxygen into a liquid by the mechanical action of paddle, paddle wheel, spray, or turbine mechanisms.

mechanical aerator -- A mechanical device for the introduction of atmospheric oxygen into a liquid. See mechanical aeration.

mechanical agitation -- The introduction of atmospheric oxygen into a liquid by the mechanical action of paddle, paddle wheel, spray, or turbine mechanisms. Also see mechanical aeration.

mechanically cleaned screen -- A screen equipped with mechanical cleaning apparatus for removal of retained solids.

membrane filtration -- A method of quantitative or qualitative analysis of bacterial or particulate matter in a water sample by filtration

through a membrane capable of retaining bacteria.

mesh screen -- A screen composed of woven fabric of any of various materials.

methane fermentation -- Fermentation resulting in conversion of organic matter into methane gas.

microbial activity -- Chemical changes resulting from the metabolism of living organisms. Biochemical action.

microbial film -- A gelatinous film of microbial growth attached to or spanning the interstices of a support medium. Also called biological slime.

microbiology -- Study of very small units of living matter and their processes.

micron -- Unit of length: 10^{-6} meters; 39×10^{-6} in.

microorganism -- Minute organism, either plant or animal, invisible or barely visible to the naked eye.

milligrams per liter -- A unit of the concentration of water or wastewater constituent. It is 0.001 g of the constituent in 1,000 ml of water. It has replaced the unit formerly used commonly, parts per million, to which it is approximately equivalent, in reporting the results of water and wastewater analysis.

minimum flow -- The flow occurring in a stream during the driest period of the year. Also called low flow.

mixed liquor -- A mixture of activated sludge and organic matter undergoing activated sludge treatment in the aeration tank.

mixed-liquor volatile suspended solids (MLVSS) -- The concentration of volatile suspended solids in an aeration basin. It is commonly assumed to equal the biological solids concentration in the basin.

mixing basin -- (1) A basin or tank wherein agitation is applied to water, wastewater, or sludge to increase the dispersion rate of applied chemicals. (2) A tank used for general mixing purposes.

mixing tank -- A tank designed to provide a thorough mixing of chemicals

introduced into liquids or of two or more liquids of different characteristics.

modified aeration -- A modification of the activated sludge process in which a shortened period of aeration is used with a reduced quantity of suspended solids in the mixed liquor.

moisture -- Condensed or diffused liquid, especially water.

moisture content -- The quantity of water present in soil, wastewater sludge, industrial waste sludge, and screenings, usually expressed in percentage of wet weight.

municipal waste -- The combined residential and commercial waste materials generated in a given municipal area.

natural water -- Water as it occurs in its natural state, usually containing other solid, liquid, or gaseous materials in solution or suspension.

neutralization -- Reaction of acid or alkali with the opposite reagent until the concentrations of hydrogen and hydroxyl ions in the solution are approximately equal.

nitrification -- (1) The conversion of nitrogenous matter into nitrates by bacteria. (2) The treatment of a material with nitric acid.

Nitrosomonas -- A genus of bacteria that oxidize ammonia to nitrite.

nonbiodegradable -- Incapable of being broken down into innocuous products by the actions of living beings (especially microorganisms).

nonpotable water -- Water which is unsatisfactory for consumption.

nonsettleable matter -- That suspended matter which does not settle nor float to the surface of water in a period of 1 hr.

nonsettleable solids -- Wastewater matter that will stay in suspension for an extended period of time. Such period may be arbitrarily taken for testing purposes as 1 hr. See suspended solids.

nutrient -- (1) Any substance assimilated by organisms which promotes growth and replacement of cellular constituents. (2) A chemical substance (an element or an inorganic compound, e.g., nitrogen or phosphate) absorbed by a green plant and used in organic synthesis.

odor control -- (1) In water treatment, the elimination or reduction of odors in a water supply by aeration, algae elimination, superchlorination, activated carbon treatment, and other methods. (2) In wastewater treatment, the prevention or reduction of objectionable odors by chlorination, aeration, or other processes or by masking with chemical aerosols.

organic loading -- Pounds of BOD applied per day to a biological reactor.

organic matter -- Chemical substances of animal or vegetable origin, or more correctly, of basically carbon structure, comprising compounds consisting of hydrocarbons and their derivatives.

organic-matter degradation -- The conversion of organic matter to inorganic forms by biological action.

orthophosphate -- An acid or salt containing phosphorus as PO_4.

overflow -- (1) The excess water that overflows the ordinary limits such as the streambanks, the spillway crest, or the ordinary level of a container. (2) To cover or inundate with water or other fluid.

overflow rate -- One of the criteria for the design of settling tanks in treatment plants; expressed in gallons per day per square foot of surface area in the settling tank.

overland runoff -- Water flowing over the land surface before it reaches a definite stream channel or body of water.

oxidation -- The addition of oxygen to a compound. More generally, any reaction which involves the loss of electrons from an atom.

oxidation pond -- A basin used for retention of wastewater before final disposal, in which biological oxidation of organic material is effected by natural or artificially accelerated transfer of oxygen to the water from air.

oxidation process -- Any method of wastewater treatment for the oxidation of the putrescible organic matter. The usual methods are biological filtration and the activated sludge process.

oxidation rate -- The rate at which the organic matter in wastewater is stabilized.

oxidized sludge -- The liquid and solid product of the wet air oxidation of wastewater sludge.

oxidized wastewater -- Wastewater in which the organic matter has been stabilized.

oxygen demand -- (1) The quantity of oxygen utilized in the biochemical oxidation of organic matter in a specified time, at a specified temperature, and under specified conditions. See BOD.

oxygen saturation -- The maximum quantity of dissolved oxygen that liquid of given chemical characteristics, in equilibrium with the atmosphere, can contain at a given temperature and pressure.

ozone -- Oxygen in molecular form with three atoms of oxygen forming each molecule (O_3).

Parshall flume -- A calibrated device developed by Parshall for measuring the flow of liquid in an open conduit. It consists essentially of a contracting length, a throat, and an expanding length. At the throat is a sill over which the flow passes at Belanger's critical depth. The upper and lower heads are each measured at a definite distance from the sill. The lower head need not be measured unless the sill is submerged more than about 67 percent.

particle -- Any dispersed matter, solid or liquid, in which the individual aggregates are larger than single small molecules (about 0.0002 mm in diameter), but smaller than about 500 μm in diameter.

particle size -- (1) An expression for the size of liquid or solid particles expressed as the average or equivalent diameter. (2) The sizes of the two screens, either in the U.S. Sieve Series or the Tyler Series between which the bulk of a carbon sample falls, e.g., 8 × 30 means most of the carbon passes a No. 8 screen but is retained on a No. 30 screen.

parts per million -- The number of weight or volume units of a minor constituent present with each one million units of the major constituent of a solution or mixture. Formerly used to express the results of most water and wastewater analyses, but more recently replaced by the ratio milligrams per liter.

pathogens -- Pathogenic or disease-producing organisms.

peak demand -- The maximum momentary load placed on a water or wastewater

plant or pumping station or on an electric generating plant or system. This is usually the maximum average load in 1 hr or less, but may be specified as instantaneous or with some other short time period.

peak load -- (1) The maximum average load carried by an electric generating plant or system for a short time period such as 1 hr or less. See peak. (2) The maximum demand for water placed on a pumping station, treatment plant, or distribution system, expressed as a rate. (3) The maximum rate of flow of wastewater to a pumping station or treatment plant. Also called peak demand.

percolating filter -- A type of trickling filter.

percolation -- (1) The flow or trickling of a liquid downward through a contact or filtering medium. The liquid may or may not fill the pores of the medium. Also called filtration. (2) The movement or flow of water through the interstices or the pores of a soil or other porous medium.

pH -- The reciprocal of the logarithm of the hydrogen-ion concentration. The concentration is the weight of hydrogen ions, in grams, per liter of solution. Neutral water, for example, has a pH value of 7 and a hydrogen-ion concentration of 10^{-7}.

phosphate -- A salt or ester of phosphoric acid.

pipe gallery -- (1) Any conduit for pipe, usually of a size to allow a man to walk through. (2) A gallery provided in a treatment plant for the installation of the conduits and valves and for a passageway to provide access to them.

pit privy -- A privy placed directly over an excavation in the ground.

pollution -- A condition created by the presence of harmful or objectionable material in water.

pollutional load -- (1) The quantity of material in a waste stream that requires treatment or exerts an adverse effect on the receiving system. (2) The quantity of material carried in a body of water that exerts a detrimental effect on some subsequent use of that water.

polyelectrolytes -- Long-chained, ionic, high molecular weight,

synthetic, water soluble, organic coagulants. Also referred to as polymers.

polymers -- Long-chained, high molecular weight, synthetic, water soluble, organic coagulants. Polymers can be classified as nonionic, cationic, and anionic.

porous -- Having small passages; permeable by fluids.

postchlorination -- The application of chlorine to water or wastewater subsequent to any treatment, including prechlorination.

potable water -- Water that does not contain objectional pollution, contamination, minerals, or infective agents and is considered satisfactory for domestic consumption.

preaeration -- A preparatory treatment of wastewater consisting of aeration to remove gases, add oxygen, promote flotation of grease, and aid coagulation.

prechlorination -- The application of chlorine to water or wastewater prior to any treatment.

precipitation -- (1) The total measurable supply of water received directly from clouds as rain, snow, hail, or sleet; usually expressed as depth in a day, month, or year, and designated as daily, monthly, or annual precipitation. (2) The process by which atmospheric moisture is discharged onto a land or water surface. (3) The phenomenon that occurs when a substance held in solution in a liquid passes out of solution into solid form.

preliminary filter -- A filter used in a water treatment plant for the partial removal of turbidity before final filtration. Such filters are usually of the rapid type, and their use allows final filtration at a more rapid rate or reduces or removes the necessity of other preliminary treatment of the water. Also called contact filter, contact roughing filter, roughing filter.

preliminary treatment -- (1) The conditioning of a waste at its source before discharge, to remove or to neutralize substances injurious to sewers and treatment processes or to effect a partial reduction in load on the treatment process. (2) In the treatment process, unit operations, such as screening and comminution, that prepare the liquor for subsequent major operations.

presettling -- The process of sedimentation applied to a liquid before subsequent treatment.

pressure regulator -- A device for controlling pressure in a pipeline or pressurized tank, such as a pressure-regulating valve or a pump drive-speed controller.

primary settling tank -- The first settling tank for the removal of settleable soils through which wastewater is passed in a treatment works.

primary sludge -- Sludge obtained from a primary settling tank.

primary treatment -- (1) The first major (sometimes the only) treatment in a wastewater treatment works, usually sedimentation. (2) The removal of a substantial amount of suspended matter but little or no colloidal and dissolved matter.

privy -- A building, either portable or fixed directly to a pit or vault, equipped with seating and used for excretion of bodily wastes.

privy vault -- A concrete or masonry vault that is provided with a cleanout opening and over which is placed a privy building containing seats.

proportional weir -- A special type of weir in which the discharge through the weir is directly proportional to the head.

public water supply -- A water supply from which water is available to the people at large or to any considerable number of members of the public indiscriminately.

pumping station -- A station housing relatively large pumps and their accessories. Pump house is the usual term for shelters for small water pumps.

purification -- The removal of objectionable matter from water by natural or artificial methods.

putrefaction -- Biological decomposition of organic matter with the production of ill-smelling products associated with anaerobic conditions.

radiation -- The emission and propagation of energy through space or

through a material medium; also, the energy so propagated.

rakings -- The screenings or trash removed from bar screens cleaned manually or by mechanical rakes.

rapid filter -- A rapid sand filter or pressure filter.

rapid sand filter -- A filter for the purification of water, in which water that has been previously treated, usually by coagulation and sedimentation, is passed downward through a filtering medium. The medium consists of a layer of sand, prepared anthracite coal, or other suitable material, usually 24-30 in. thick, resting on a supporting bed of gravel or a porous medium such as carborundum. It is characterized by a rapid rate of filtration, commonly from two to three gallons per minute per square foot of filter area.

raw sludge -- Settled sludge promptly removed from sedimentation tanks before decomposition has much advanced. Frequently referred to as undigested sludge.

raw wastewater -- Wastewater before it receives any treatment.

receiving body of water -- A natural watercourse, lake, or ocean into which treated or untreated wastewater is discharged.

recycling -- An operation in which a substance is passed through the same series of processes, pipes, or vessels more than once.

regeneration -- (1) In ion exchange, the process of restoring an ion-exchange material to the state employed for adsorption. (2) The periodic restoration of exchange capacity of ion-exchange media used in water treatment.

regeneration efficiency -- In ion exchange, regeneration level divided by breakthrough capacity.

resinous anion exchangers -- Organic polymers consisting of amines and quaternary ammonium compounds. They may be regenerated by any caustic.

resinous cation exchangers -- Synthetic organic polymers generally of the sulfonated polystyrene type produced in a granular or beadlike form and in an effective size and uniformity coefficient comparable to that specified for filter sand.

retention -- That part of the precipitation falling on a drainage area which does not escape as surface streamflow, during a given period. It is the difference between total precipitation and total runoff during the period, and represents evaporation, transpiration, subsurface leakage, infiltration, and, when short periods are considered, temporary surface or underground storage on the area.

returned sludge -- Settled activated sludge returned to mix with incoming raw or primary settled wastewater.

Reynolds' number -- A numerical quantity used to characterize the type of flow in a hydraulic structure where resistance to motion depends on the viscosity of the liquid in conjunction with the resisting force of inertia. It is equal to the ratio of inertia forces to viscous forces. It is equal to the product of a characteristic velocity of the system (it may be the mean, surface, or maximum velocity) and a characteristic linear dimension, such as diameter or depth, divided by the kinematic viscosity of the liquid; all expressed in consistent units in order that the combinations will be dimensionless. The number is chiefly applicable to closed systems of flow, such as pipes or conduits where there is no free water surface, or to bodies fully immersed in the fluid so the free surface need not be considered.

rotary distributor -- A movable distributor made up of horizontal arms that extend to the edge of the circular trickling filter bed, revolve about a central post, and distribute liquid over the bed through orifices in the arms. The jet action of the discharging liquid normally supplies the motive power.

rotary dryer -- A long steel cylinder, slowly revolving, with its long axis slightly inclined; through which passes the material to be dried in hot air. The material passes through from inlet to outlet, tumbling about.

runoff -- (1) That portion of the earth's available water supply that is transmitted through natural surface channels. (2) Total quantity of runoff water during a specified time. (3) In the general sense, that portion of the precipitation which is not absorbed by the deep strata, but finds its way into the streams after meeting the persistent demands of evapotranspiration, including interception and other losses. (4) The discharge of water in surface streams, usually expressed in inches depth on the drainage area, or as volume in such terms as cubic feet or acre-feet. (5) That part of the precipitation which runs off the surface of a drainage area and reaches a stream or other body of water or a drain or sewer.

sand filter -- A filter in which sand is used as a filtering medium. Also see rapid sand filter, slow sand filter.

scale -- An accumulation of solid material precipitated out of waters containing certain mineral salts in solution and formed on interior surfaces, such as those of pipelines, tanks, boilers, under certain physical conditions. May also be formed from interaction of water with metallic pipe.

screen -- A device with openings, generally of uniform size, used to retain or remove suspended or floating solids in flowing water or wastewater and to prevent them from entering an intake or passing a given point in a conduit. The screening element may consist of parallel bars, rods, wires, grating, wire mesh, or perforated plate, and the openings may be of any shape, although they are usually circular or rectangular.

screening -- The removal of relatively coarse floating and suspended solids by straining through racks or screens.

screenings -- Material removed from liquids by screens.

screenings dewatering -- The removal of a large part of the water content of waste screenings by draining or by mechanical means.

screenings grinder -- A device for grinding, shredding, or macerating material removed from wastewater by screens.

screenings shredder -- A device that disintegrates screenings.

screw-feed pump -- A pump with either horizontal or vertical cylindrical casing, in which operates a runner with radial blades like those of a ship's propeller.

scum -- (1) The layer or film of extraneous or foreign matter that rises to the surface of a liquid and is formed there. (2) A residue deposited on a container or channel at the water surface. (3) A mass of solid matter that floats on the surface.

secondary settling tank -- A tank through which effluent from some prior treatment process flows for the purpose of removing settleable solids. See sedimentation tank.

secondary wastewater treatment -- The treatment of wastewater by biological methods after primary treatment by sedimentation.

sedimentation -- The process of subsidence and deposition of suspended matter carried by water, wastewater, or other liquids, by gravity. It is usually accomplished by reducing the velocity of the liquid below the point at which it can transport the suspended material. Also called settling. See chemical precipitation.

sedimentation basin -- A basin or tank in which water or wastewater containing settleable solids is retained to remove by gravity a part of the suspended matter. Also called sedimentation tank, settling basin, settling tank.

sedimentation tank -- A basin or tank in which water or wastewater containing settleable solids is retained to remove by gravity a part of the suspended matter. Also called sedimentation basin, settling basin, settling tank.

septicity -- A condition produced by growth of anaerobic organisms.

septicization -- In anaerobic decomposition, the process whereby intensive growths of bacteria with the enzymes secreted by them liquify and gasify solid organic matter.

septic sludge -- Sludge from a septic tank or partially digested sludge from an Imhoff tank or sludge-digestion tank.

septic tank -- A settling tank in which settled sludge is in immediate contact with the wastewater flowing through the tank and the organic solids are decomposed by anaerobic bacterial action.

septic wastewater -- Wastewater undergoing putrefaction under anaerobic conditions.

settleability test -- A determination of the settleability of solids in a suspension by measuring the volume of solids settled out of a measured volume of sample in a specified interval of time, usually reported in milliliters per liter. Sometimes identified as the Imhoff cone test.

settleable solids -- (1) That matter in wastewater which will not stay in suspension during a preselected settling period, such as 1 hr, but either settles to the bottom or floats to the top. (2) In the Imhoff cone test, the volume of matter that settles to the bottom of the cone in 1 hr.

settled wastewater -- Wastewater from which most of the settleable

solids have been removed by sedimentation. Also called clarified wastewater.

settling -- The process of subsidence and deposition of suspended matter carried by water, wastewater, or other liquids, by gravity. It is usually accomplished by reducing the velocity of the liquid below the point at which it can transport the suspended material. Also called sedimentation. See chemical precipitation.

settling basin -- A basin or tank in which water or wastewater containing settleable solids is retained to remove by gravity a part of the suspended matter. Also called sedimentation basin, sedimentation tank, settling tank.

settling solids -- Solids that are settling in sedimentation tanks or sedimentation chambers and other such tanks that are constructed for the purpose of removing this fraction of suspended solids. See settleable solids.

settling tank -- A basin or bank in which water or wastewater containing settleable solids is retained to remove by gravity a part of the suspended matter. Also called sedimentation basin, sedimentation tank, settling basin.

settling velocity -- The velocity at which subsidence and deposition of the settleable suspended solids in water and wastewater will occur.

sewage -- The spent water of a community. Term now being replaced in technical usage by preferable term wastewater. See wastewater.

sewer -- A pipe or conduit that carries wastewater or drainage water.

sewer gas -- Gas evolved in sewers that results from the decomposition of the organic matter in the wastewater.

sharp-crested weir -- A weir having a crest, usually consisting of a thin plate (generally of metal), so sharp that the water in passing over it touches only a line.

short-circuiting -- A hydraulic condition occurring in parts of a tank where the time of travel is less than the flowing-through time.

shredder -- A device for size reduction.

shredding -- A process for the treatment and handling of solid wastes.

The refuse is reduced to particles having no greater dimension than 2 in. by a shredder. Also called grinding.

side water depth -- The depth of water measured along a vertical exterior wall.

skimming -- The process of removing floating grease or scum from the surface of wastewater in a tank.

skimmings -- Grease, solids, liquids, and scum skimmed from wastewater settling tanks.

skimming tank -- A tank so designed that floating matter will rise and remain on the surface of the wastewater until removed, while the liquid discharges continuously under curtain walls or scum boards.

slimes -- Substances of viscous organic nature, usually formed from microbiological growth.

slow sand filter -- A filter for the purification of water in which water without previous treatment is passed downward through a filtering medium consisting of a layer of sand or other suitable material, usually finer than for a rapid sand filter and from 24 to 40 in. thick. It is characterized by a slow rate of filtration, commonly 3-6 mgd/acre of filter area.

sludge -- (1) The accumulated solids separated from liquids, such as water or wastewater, during processing, or deposits on bottoms of streams or other bodies of water. (2) The precipitate resulting from chemical treatment, coagulation, or sedimentation of water or wastewater.

sludge bed -- An area comprising natural or artificial layers of porous material on which digested wastewater sludge is dried by drainage and evaporation. A sludge bed may be open to the atmosphere or covered, usually with a greenhouse-type superstructure. Also called sludge drying bed.

sludge blanket -- Accumulation of sludge hydrodynamically suspended within an enclosed body of water or wastewater.

sludge cake -- The sludge that has been dewatered by a treatment process to a moisture content of 60-85 percent, depending on type of sludge and manner of treatment.

sludge circulation -- The overturning of sludge in sludge-digestion tanks by mechanical or hydraulic means or by use of gas recirculation to disperse scum layers and to promote digestion.

sludge collector -- A mechanical device for scraping the sludge on the bottom of a settling tank to a sump from which it can be drawn.

sludge concentration -- Any process of reducing the water content of sludge that leaves the sludge in a fluid condition.

sludge conditioning -- Treatment of liquid sludge before dewatering to facilitate dewatering and enhance drainability, usually by the addition of chemicals.

sludge density index -- The reciprocal of the sludge volume index multiplied by 100.

sludge dewatering -- The process of removing a part of the water in sludge by any method such as draining, evaporation, pressing, vacuum filtration, centrifuging, exhausting, passing between rollers, acid flotation, or dissolved-air flotation with or without heat. It involves reducing from a liquid to a spadable condition rather than merely changing the density of the liquid (concentration) on the one hand or drying (as in a kiln) on the other.

sludge digestion -- The process by which organic or volatile matter in sludge is gasified, liquified, mineralized, or converted into more stable organic matter through the activities of either anaerobic or aerobic organisms.

sludge-digestion gas -- Gas resulting from the decomposition of organic matter in sludge removed from wastewater and placed in a tank to decompose under anaerobic conditions. Also see sewage gas, sludge digestion.

sludge-digestion tank -- A tank in which sludge is placed for the purpose of permitting digestion to occur. See sludge digestion.

sludge dryer -- A device for removal of a large percentage of moisture from sludge or screenings by heat.

sludge drying -- The process of removing a large percentage of moisture from sludge by drainage or evaporation by any method.

sludge filter -- A device in which wet sludge, usually conditioned by

a coagulant, is partly dewatered by vacuum or pressure.

sludge foaming -- An increase in the gas in sludge in Imhoff and separate digestion tanks, causing large quantities of froth, scum, and sludge to rise and overflow from openings at or near the top of the tanks.

sludge lagoon -- A basin used for the storage, digestion, or dewatering of sludge.

sludge reaeration -- The continuous aeration of sludge after its initial aeration for the purpose of improving or maintaining its condition.

sludge reduction -- The reduction in quantity and change in character of sludge as the result of digestion.

sludge solids -- Dissolved and suspended solids in sludge.

sludge thickener -- A tank or other equipment designed to concentrate wastewater sludges.

sludge thickening -- The increase in solids concentration of sludge in a sedimentation or digestion tank. See sludge concentration.

sludge treatment -- The processing of wastewater sludges to render them innocuous. This may be done by aerobic or anaerobic digestion followed by drying on sand beds, filtering, and incineration, filtering and drying, or wet air oxidation.

sludge utilization -- The use of wastewater sludges as soil builders and fertilizer admixtures. Sludges produced by aerobic and anaerobic digestion and activated sludge are used for these purposes.

sludge volume index (SVI) -- The ratio of the volume in milliliters of sludge settled from a 1,000-ml sample in 30 min to the concentration of mixed liquor in milligrams per liter multiplied by 1,000.

slurry -- A thin watery mud, or any substance resembling it, such as a lime slurry.

sodium carbonate -- A salt used in water treatment to increase the alkalinity or pH value of water or to neutralize acidity. Chemical symbol is Na_2-CO_3. Also called soda ash.

solids-retention time -- The average residence time of suspended soils in a biological waste treatment system, equal to the total weight of suspended solids in the system divided by the total weight of suspended solids leaving the system per unit of time (usually per day).

specific gravity -- The ratio of the mass of a body to the mass of an equal volume of water.

specific resistance -- A sludge filterability index, generally expressed as sec^2/g.

spiral air-flow diffusion -- A method of diffusing air in an aeration tank of the activated sludge process where, by means of properly designed baffles and the proper location of diffusers, a spiral or helical movement is given to the air and the tank liquor.

spiral-flow aeration -- A method of diffusing air in an aeration tank of the activated sludge process. See spiral air-flow diffusion.

spiral-flow tank -- An aeration tank or channel in which a spiral or helicoidal motion is given to the liquid in its flow through the tank by the introduction of air through a line of diffusers placed on one side of the bottom of each channel, by longitudinally revolving paddles, or by other means.

spray irrigation -- A method for disposing of some organic wastewaters by spraying them on land, usually from pipes equipped with spray nozzles. This has proved to be an effective way to dispose of wastes from the canning, meat-packing, and sulfite-pulp industries where suitable land is available.

stabilization -- (1) Maintenance at a relatively nonfluctuating level, quantity, flow, or condition. (2) In lime-soda water softening, any process that will minimize or eliminate scale-forming tendencies. (3) In waste treatment, a process used to equalize wastewater flow composition prior to regulated discharge.

stabilization lagoon -- A shallow pond for storage of wastewater before discharge. Such lagoons may serve only to detain and equalize wastewater composition before regulated discharge to a stream, but often they are used for biological oxidation. See stabilization pond.

stabilization pond -- A type of oxidation pond in which biological

oxidation of organic matter is affected by natural or artificially accelerated transfer of oxygen to the water from air.

step aeration -- A procedure for adding increments of settled wastewater along the line of flow in the aeration tanks of an activated sludge plant.

sterilization -- The destruction of all living microorganisms, as pathogenic or saprophytic bacteria, vegetative forms, and spores.

sterilized wastewater -- An effluent from a wastewater treatment plant in which all microorganisms have been destroyed by sterilization.

subsoil -- That portion of a normal soil profile underlying the surface. In humid climates it is lower in content of organic matter, lighter in color, usually of finer particles, of denser structure, and of lower fertility than the surface soil. Its depth and physical properties control to a considerable degree the movement of soil moisture. In arid climates there is less difference between surface and subsoil.

sump -- (1) A tank or pit that receives drainage and stores it temporarily, and from which the drainage is pumped or ejected. (2) A tank or pit that receives liquids.

supernatant -- The liquid standing above a sediment or precipitate.

surface evaporation -- Evaporation from the surface of a body of water, moist soil, snow, or ice. Also see evapotranspiration.

surface wash -- (1) A supplementary method of washing the filtering medium of a rapid sand filter by applying water under pressure at or near the surface of the sand by means of a system of stationary or rotating jets. (2) The surface runoff draining into a ditch or drain.

suspended solids -- Solids that either float on the surface of, or are in suspension in, water, wastewater, or other liquids, and which are largely removable by laboratory filtering.

tank -- Any artificial receptacle through which liquids pass or in which they are held in reserve or detained for any purpose.

temperature -- (1) The thermal state of a substance with respect to its ability to communicate heat to its environment. (2) The measure of the thermal state on some arbitrarily chosen numerical scale.

tertiary treatment -- A method used to refine the effluents from secondary treatment systems or otherwise increase the removal of pollutants.

thickened sludge -- A sludge concentrated to a higher solids content by gentle mixing, gravimetric settling, centrifugation, or air flotation.

thickener, sludge -- A type of sedimentation tank in which sludge is permitted to settle, usually equipped with scrapers traveling along or around the bottom of the tank to push the settled sludge to a sump.

thickening tank -- A sedimentation tank for concentrated suspensions.

total Kjeldahl nitrogen -- The sum of free ammonia and of organic compounds which are converted to $(NH_4)_2SO_4$ under the conditions of digestion.

total organic carbon (TOC) -- A measure of the amount of organic material in a water sample expressed in milligrams of carbon per liter of solution.

toxin -- Poisonous compounds produced by the metabolic activity or death and disintegration of microorganisms.

trash -- Floating debris that may be removed from reservoirs, combined sewers, and storm-water sewers by coarse racks.

trash rack -- A grid or screen placed across a waterway to catch floating debris.

trash screen -- A screen installed or constructed in a waterway to collect and prevent the passage of trash.

treated sewage -- Wastewater that has received partial or complete treatment.

treatment -- See following terms modifying treatment: anaerobic waste, biological wastewater, chemical, intermediate, ion-exchange, preliminary, primary, secondary wastewater, sludge, waste, wastewater, water.

trickling filter -- A treatment unit consisting of a material such as broken stone, clinkers, slate, slats, or brush, over which sewage is distributed and applied in drops, films, or spray, from troughs, drippers, moving distributors, or fixed nozzles, and through which

it trickles to the underdrains, giving opportunity for the formation of zoological slimes which clarify and oxidize the sewage.

trickling filter humus -- The sludge removed from clarifiers following biological stabilization in trickling filter units.

trickling filter ponding -- A condition occurring when voids in filter media become clogged with excessive growth of organisms, preventing the free flow of the wastewater.

trickling-filter process -- In wastewater treatment, a process in which the liquid from a primary clarifier is distributed on a bed of stones. As the wastewater trickles through to drains underneath, it comes in contact with slime on the stones, by which organic material in the water is oxidized and impurities are reduced.

turbidity -- (1) A condition in water or wastewater caused by the presence of suspended matter, resulting in the scattering and absorption of light rays. (2) A measure of fine suspended matter in liquids. (3) An analytical quantity usually reported in arbitrary turbidity units determined by measurements of light diffraction.

ultraviolet radiation -- Light waves shorter than visible blue-violet waves of the spectrum, having wave lengths of less than 3,900 A.

ultraviolet rays -- Those invisible light rays beyond the violet of the spectrum.

underdrain -- A drain that carries away groundwater or the drainage from prepared beds to which water or wastewater has been applied.

underflow -- (1) The movement of water through a given cross section of permeable rock or earth, possibly under the bed of a stream or a structure. (2) The flow of water under a structure.

undigested sludge -- Settled sludge promptly removed from sedimentation tanks before decomposition has much advanced. Also called raw sludge.

vacuum filter -- A filter consisting of a cylindrical drum mounted on a horizontal axis, covered with a filter cloth, and revolving with a partial submergence in liquid. A vacuum is maintained under the cloth for the larger part of a revolution to extract moisture. The cake is scraped off continuously.

velocity -- See settling velocity.

viscosity -- The cohesive force existing between particles of a fluid which causes the fluid to offer resistance to a relative sliding motion between particles.

volatile -- Capable of being evaporated at relatively low temperatures.

volatile solids -- The quantity of solids in water, wastewater, or other liquids, lost on ignition of the dry solids at 600°C.

wash water -- Water used to wash filter beds in a rapid sand filter.

wash-water gutter -- A trough or gutter used to carry away the water that has washed the sand in a rapid sand filter. Also called wash-water trough.

wash-water rate -- The rate at which wash water is applied to a rapid sand filter during the washing process. Usually expressed as the rise of water in the filter in inches per minute or gallons per minute per square foot.

waste -- Something that is superfluous or rejected; something that can no longer be used for its originally intended purpose.

wasted sludge -- The portion of settled solids from the final clarifier that was removed from the wastewater treatment processes and transferred to the solids handling facilities for ultimate disposal.

waste(s) -- See following terms modifying waste(s): <u>industrial</u>, <u>municipal</u>.

waste treatment -- Any process to which wastewater or industrial waste is subjected to make it suitable for subsequent use.

waste water -- In a legal sense, water that is not needed or that has been used and is permitted to escape, or that unavoidably escapes from ditches, canals, or other conduits, or reservoirs of the lawful owners of such structures. See <u>wastewater</u>.

wastewater -- The spent water of a community. From the standpoint of source, it may be a combination of the liquid and water-carried wastes from residences, commercial buildings, industrial plants, and institutions, together with any groundwater, surface water, and storm water that may be present. Also referred to as sewage.

wastewater decomposition -- Transformations of organic or inorganic

materials contained in wastewater through the action of chemical or biological processes. Also see decomposition of wastewater.

wastewater disposal -- The act of disposing of wastewater by any method (not synonymous with wastewater treatment). Common methods of disposal are: dispersion, dilution, broad irrigation, privy, cesspool.

wastewater facilities -- The structures, equipment, and processes required to collect, carry away, and treat domestic and industrial wastes, and dispose of the effluent.

wastewater lagoon -- An impoundment into which wastewater is discharged at a rate low enough to permit oxidation to occur without substantial nuisance.

wastewater treatment -- Any process to which wastewater is subjected in order to remove or alter its objectional constituents and thus render it less offensive or dangerous. See intermediate treatment, primary treatment.

wastewater treatment works -- (1) An arrangement of devices and structures for treating wastewater, industrial wastes, and sludge. Sometimes used as synonymous with waste treatment plant or wastewater treatment plant. (2) A water pollution control plant.

water -- A transparent, odorless, tasteless liquid, a compound of hydrogen and oxygen, H_2O, freezing at 32°F or 0°C and boiling at 212°F or 100°C, which, in more or less impure state, constitutes rain, oceans, lakes, rivers, and other such bodies; it contains 11.188 percent hydrogen and 88.812 percent oxygen, by weight. It may exist as a solid, liquid, or gas and, as normally found in the lithosphere, hydrosphere, and atmosphere, may have other solid, gaseous, or liquid materials in solution or suspension.

water-borne disease -- A disease caused by organisms or toxic substances carried by water, the most common of which diseases are typhoid fever, Asiatic cholera, dysentery, and other intestinal disturbances.

water closet -- A plumbing fixture, usually a toilet bowl, seat, and water tank, or valved pressure water connection, for carrying off excreta and liquid wastes to a drain pipe connected below, by the agency of flushing water.

water conditioning -- Treatments, exclusive of disinfection, intended

to produce a water free of taste, odor, and other undesirable qualities.

water treatment -- The filtration or conditioning of water to render it acceptable for a specific use.

water treatment plant -- That portion of water treatment works intended specifically for water treatment; may include, among other operations, sedimentation, chemical coagulation, filtration, and chlorination. See water treatment works.

water treatment works -- A group or assemblage of processes, devices, and structures used for the treatment or conditioning of water.

weir -- (1) A diversion dam. (2) A device that has a crest and some side containment of known geometric shape, such as a V, trapezoid, or rectangle, and is used to measure flow of liquid. The liquid surface is exposed to the atmosphere. Flow is related to upstream height of water above the crest, to position of crest with respect to downstream water surface, and to geometry of the weir opening.

weir loading -- In a solids-contact or sedimentation unit, the rate in gallons per minute per foot of weir length at which clarified or treated liquid is leaving the unit. Also see overflow rate.

wet well -- A compartment in which a liquid is collected, and to which the suction pipe of a pump is connected.

zooglea -- A jelly-like matrix developed by bacteria, associated with growths in oxidizing beds.

zoogleal matrix -- The floc formed primarily by slime-producing bacteria in the activated sludge process or in biological beds.

INDEX

	Paragraph	Page
Activated sludge (See Biological unit processes and Cost data and economic analysis)		
Adsorption (See Chemical unit processes and Cost data and economic analysis)		
Aeration (See Biological unit processes and Cost data and economic analysis)		
Ammonia (See Chemical unit processes and Cost data and economic analysis)		
Backwashing (See Filtration and Microscreening)		
Biological unit processes:		
Activated sludge:		
Complete mix:		
Background	7-19	7-37
Bibliography	7-26	7-66
Cost data	7-25	7-66
Design parameters	7-21	7-39
Design procedure:		
Eckenfelder's approach	7-22b	7-48
McKinney's approach	7-22a	7-40
Example calculations (Eckenfelder)	7-24	7-57
Input data	7-20	7-37
Output data	7-23	7-56
Contact stabilization:		
Background	7-51	7-151
Bibliography	7-58	7-168
Cost data	7-57	7-168
Design parameters	7-53	7-153
Design procedure	7-54	7-154
Example calculations	7-56	7-161
Input data	7-52	7-151
Output data	7-55	7-160
Extended aeration:		
Background	7-35	7-95
Bibliography	7-42	7-125
Cost data	7-41	7-124
Design parameters	7-37	7-96
Design procedure:		
Eckenfelder's approach	7-38b	7-105
McKinney's approach	7-38a	7-98

	Paragraph	Page
Example calculations (Eckenfelder)	7-40	7-115
Input data	7-36	7-95
Output data	7-39	7-114
Modified or high-rate:		
Background	7-43	7-129
Bibliography	7-50	7-147
Cost data	7-49	7-147
Design parameters	7-45	7-130
Design procedure (Eckenfelder)	7-46	7-131
Example calculations	7-48	7-140
Input data	7-44	7-129
Output data	7-47	7-138
Plug flow:		
Background	7-10	7-13
Bibliography	7-18	7-34
Cost data	7-17	7-34
Example calculations	7-16	7-25
Design parameters	7-13	7-15
Design procedure (Eckenfelder)	7-14	7-17
Input data	7-12	7-14
Output data	7-15	7-24
Pure oxygen:		
Background	7-59	7-171
Bibliography	7-66	7-200
Cost data	7-65	7-200
Design parameters	7-61	7-172
Design procedure:		
Eckenfelder's approach	7-62b	7-182
McKinney's approach	7-62a	7-174
Example calculations	7-64	7-191
Input data	7-60	7-171
Output data	7-63	7-190
Step aeration:		
Background	7-27	7-69
Bibliography	7-34	7-90
Cost data	7-33	7-90
Design parameters	7-29	7-71
Design procedure:		
Eckenfelder's approach	7-30b	7-81
McKinney's approach	7-30a	7-72
Example calculations	7-32	7-90

	Paragraph	Page
Input data	7-28	7-69
Output data	7-31	7-89
Digestion:		
Aerobic:		
Background	7-100	7-278
Bibliography	7-107	7-287
Cost data	7-106	7-287
Design parameters	7-102	7-278
Design procedure	7-103	7-278
Example calculations	7-105	7-283
Input data	7-101	7-278
Introduction	7-99	7-277
Output data	7-104	7-282
Anaerobic:		
Background	7-108	7-291
Bibliography	7-115	7-304
Cost data	7-114	7-304
Design parameters	7-110	7-294
Design procedure	7-111	7-294
Example calculations	7-113	7-298
Input data	7-109	7-293
Output data	7-112	7-298
Lagoons:		
Aearated aerobic:		
Background	7-67	7-205
Bibliography	7-74	7-221
Cost data	7-73	7-221
Design parameters:		
Eckenfelder's approach	7-69b	7-206
McKinney's approach	7-69a	7-206
Example calculations (Eckenfelder)	7-72	7-216
Input data	7-68	7-205
Output data	7-71	7-215
Aerated facultative:		
Background	7-75	7-223
Bibliography	7-82	7-233
Cost data	7-81	7-232
Design parameters	7-77	7-223
Design procedure	7-78	7-224
Example calculations	7-80	7-228
Input data	7-76	7-223

	Paragraph	Page
Output data	7-79	7-227
Nitrification-denitrification:		
Background	7-91	7-253
Bibliography	7-98	7-274
Cost data	7-97	7-274
Design parameters	7-93	7-255
Design procedure	7-94	7-255
Example calculations	7-96	7-267
Input data	7-92	7-254
Output data	7-95	7-266
Oxidation ditch:		
Background	7-83	7-235
Bibliography	7-90	7-251
Cost data	7-89	7-251
Design parameters	7-85	7-236
Example calculations (Eckenfelder)	7-88	7-244
Input data	7-84	7-235
Output data	7-87	7-243
Stabilization ponds:		
Background	7-116	7-307
Bibliography	7-123	7-313
Cost data	7-122	7-313
Design parameters	7-118	7-309
Design procedure	7-119	7-309
Example calculations	7-121	7-311
Input data	7-117	7-308
Output data	7-120	7-310
Trickling filters:		
Background	7-2	7-3
Bibliography	7-9	7-9
Cost data	7-8	7-9
Design parameters	7-4	7-5
Design procedures	7-5	7-5
Example calculations	7-7	7-7
Input data	7-3	7-3
Output data	7-6	7-7
Centrifugation (See Cost data and economic analysis and Physical unit processes)		
Centrifuge (See Centrifugation)		
Chemical coagulation (See Chemical unit processes and Cost data and economic analysis)		

	Paragraph	Page
Chemical unit processes:		
Ammonia stripping:		
Background	6-18	6-25
Bibliography	6-25	6-32
Cost data	6-24	6-32
Design parameters	6-20	6-27
Design procedure	6-21	6-27
Example calculations	6-23	6-30
Input data	6-19	6-27
Output data	6-22	6-30
Carbon adsorption:		
Background	6-2	6-3
Bibliography	6-9	6-14
Cost data	6-8	6-14
Design parameters	6-4	6-5
Design procedure	6-5	6-5
Example calculations	6-7	6-9
Input data	6-3	6-4
Output data	6-6	6-9
Chemical coagulation:		
Background	6-10	6-17
Bibliography	6-17	6-22
Cost data	6-16	6-22
Design parameters	6-12	6-18
Design procedure	6-13	6-18
Example calculations	6-15	6-20
Input data	6-11	6-18
Output data	6-14	6-19
Chlorination:		
Background	6-26	6-35
Bibliography	6-33	6-41
Cost data	6-32	6-41
Design parameters	6-28	6-36
Design procedure	6-29	6-36
Example calculations	6-31	6-38
Input data	6-27	6-35
Output data	6-30	6-38
Ion exchange:		
Background	6-34	6-43
Bibliography	6-41	6-53
Cost data	6-40	6-53
Design parameters	6-36	6-43

	Paragraph	Page
Design procedure	6-37	6-44
Example calculations	6-39	6-48
Input data	6-35	6-43
Output data	6-38	6-47
Neutralization:		
Background	6-42	6-55
Bibliography	6-57	6-67
Cost data	6-56	6-67
Design parameters	6-52	6-62
Design procedure	6-53	6-62
Example calculations	6-55	6-65
Input data	6-51	6-62
Output data	6-54	6-64
Recarbonation:		
Background	6-50	6-61
Bibliography	6-57	6-67
Cost data	6-56	6-67
Design parameters	6-52	6-62
Design procedure	6-53	6-62
Example calculations	6-55	6-65
Input data	6-51	6-62
Output data	6-54	6-64
Two-stage lime treatment:		
Background	6-58	6-69
Bibliography	6-66	6-91
Chemical coagulation	6-59	6-69
Cost data	6-65	6-90
Example calculations	6-64	6-83
Output data	6-63	6-81
Primary clarifier	6-60;6-62	6-72;6-78
Recarbonation	6-61	6-76

Chlorination (See Chemical unit processes and Cost data and economic analysis)
Chlorine (See Chlorination)
Clarification (See Cost data and economic analysis and Physical unit processes)
Clarifiers (See Clarification and Sedimentation)
Comminution (See Cost data and economic analysis and Physical unit processes)

	Paragraph	Page
Complete mix activated sludge (See Biological unit processes and Cost data and economic analysis)		
Contact stabilization activated sludge (See Biological unit processes and Cost data and economic analysis)		
Cost data and economic analysis:		
Biological unit processes:		
Activated Sludge:		
Complete mix	8-30	8-18
Contact stabilization	8-34	8-19
Extended aeration	8-32	8-18
Modified or high-rate aeration	8-33	8-19
Plug flow	8-29	8-17
Pure oxygen	8-35	8-20
Step aeration	8-31	8-18
Digestion:		
Aerobic	8-40	8-23
Anaerobic	8-41	8-24
Lagoons, aerated:		
Aerobic	8-36	8-20
Facultative	8-37	8-20
Nitrification-denitrification	8-39	8-21
Oxidation ditch	8-38	8-21
Stabilization ponds	8-42	8-24
Trickling filters	8-28	8-17
Chemical unit processes:		
Ammonia stripping	8-22	8-14
Carbon adsorption	8-20	8-13
Chemical coagulation	8-21	8-13
Chlorination	8-23	8-14
Ion exchange	8-24	8-15
Neutralization	8-25	8-15
Recarbonation	8-26	8-15
Two-stage lime treatment	8-27	8-15
Physical unit processes:		
Cascade aeration	8-16	8-12
Centrifugation	8-12	8-10
Comminution	8-4	8-6
Drying beds	8-14	8-11
Equalization	8-5	8-6
Filtration	8-10	8-9

	Paragraph	Page
Flotation	8-6	8-7
Grit removal	8-2	8-5
Incineration:		
Fluidized bed	8-19	8-12
Multiple-hearth	8-18	8-12
Microscreening	8-13	8-10
Postaeration	8-15	8-11
Screening	8-3	8-5
Sedimentation:		
Primary clarifier	8-8	8-8
Secondary clarifier	8-9	8-8
Sludge hauling and land filling	8-17	8-12
Thickening (gravity)	8-7	8-7
Vacuum infiltration	8-11	8-9
Denitrification (See Biological unit processes and Cost data and economic analysis)		
Digestion (See Biological unit processes and Cost data and economic analysis)		
Drying beds (See Cost data and economic analysis and Physical unit processes)		
Equalization (See Cost data and economic analysis and Physical unit processes)		
Filter (See Filtration)		
Filtration (See Cost data and economic analysis and Physical unit processes)		
Floc (See Sedimentation)		
Flotation (See Cost data and economic analysis and Physical unit processes)		
Grit (See Cost data and economic analysis and Physical unit processes)		
Lagoons (See Biological unit processes and Cost data and economic analysis)		
Microscreening (See Cost data and economic analysis and Physical unit processes)		
Microscreens (See Microscreening)		
Neutralization (See Chemical unit processes and Cost data and economic analysis)		
Nitrification (See Biological unit processes and Cost data and economic analysis)		
Physical unit processes:		
Centrifugation:		
Background	5-84	5-131

	Paragraph	Page
Bibliography	5-91	5-137
Cost data	5-90	5-136
Design parameters	5-86	5-133
Example calculations	5-89	5-135
Design procedure	5-87	5-131
Input data	5-85	5-133
Output data	5-88	5-134
Comminution:		
Background	5-18	5-29
Bibliography	5-25	5-31
Cost data	5-24	5-31
Design parameters	5-20	5-29
Design procedure	5-21	5-29
Example calculations	5-23	5-31
Input data	5-19	5-29
Output data	5-22	5-29
Drying Beds:		
Area required in Northern U. S.	Table 5-27	5-157
Background	5-100	5-149
Bibliography	5-107	5-156
Cost data	5-106	5-155
Design parameters	5-102	5-149
Design procedure	5-103	5-151
Example calculations	5-105	5-153
Input data	5-101	5-149
Output data	5-104	5-153
Equalization:		
Background	5-26	5-33
Bibliography	5-33	5-39
Cost data	5-32	5-39
Design parameters	5-28	5-34
Design procedure	5-29	5-34
Example calculations	5-31	5-36
Input data	5-27	5-33
Output data	5-30	5-36
Filtration:		
Background	5-68	5-93
Bibliography	5-75	5-113
Cost data	5-74	5-113
Design parameters	5-70	5-97
Design procedure	5-71	5-98
Example calculations	5-73	5-105

	Paragraph	Page
Input data	5-69	5-96
Output data	5-72	5-105
Flotation:		
Background	5-34	5-41
Bibliography	5-41	5-53
Cost data	5-40	5-53
Design parameters	5-36	5-42
Design procedure	5-37	5-42
Example calculations	5-39	5-47
Input data	5-35	5-41
Output data	5-38	5-47
Grit removal:		
Background.		
Chamber	5-2a,c,d	5-3
Aerated	5-2d	5-3
	5-2g	5-4
	Figure 5-1	5-5
	Table 5-2	5-18
Design	5-2a,b,e	5-3-4
	5-2f,g	5-4
Discrete settling	5-2c	5-3
Horizontal flow	5-2d	5-3
	5-2g	5-4
	Figure 5-2	5-5
Particle size	5-2b,c	5-3
Settling velocities	5-2c	5-3
	Table 5-1	5-18
Bibliography	5-9	5-16
Cost data	5-8	5-16
Design parameters	5-4	5-4
Design procedure	5-5	5-6
Example calculations	5-7	5-11
Input data	5-3	5-4
Output data	5-6	5-10
Incineration:		
Fluidized bed:		
Background	5-129	5-189
Bibliography	5-136	5-209
Cost data	5-135	5-209
Design parameters	5-131	5-193
Design procedure	5-132	5-194
Example calculations	5-134	5-200

	Paragraph	Page
Input data	3-130	5-192
Output data	5-133	5-199
Multiple-hearth:		
Background	5-121	5-177
Bibliography	5-128	5-186
Cost data	5-127	5-185
Design parameters	5-123	5-177
Design procedure	5-124	5-179
Example calculations	5-126	5-182
Input data	5-122	5-177
Output data	5-125	5-181
Microscreening:		
Bibliography	5-99	5-146
Cost data	5-98	5-146
Definition	5-92a	5-139
Design parameters	5-94	5-141
Design procedure	5-95	5-141
Example calculations	5-97	5-143
Input data	5-93	5-141
Output data	5-96	5-143
Postaeration:		
Background	5-108	5-159
Cascade aeration	5-110	5-165
Design parameters	5-110b	5-165
Design procedure	5-110c	5-166
Example calculations	5-110e	5-167
Input data	5-110a	5-165
Output data	5-110d	5-167
Mechanical or diffused aeration	5-109	5-159
Bibliography	5-112	5-168
Cost data	5-111	5-168
Screening:		
Background	5-10	5-19
Bibliography	5-17	5-25
Cost data	5-16	5-25
Design parameters	5-12	5-21
Design procedure	5-13	5-21
Example calculations	5-15	5-23
Input data	5-11	5-20
Output data	5-14	5-23
Sedimentation:		
Primary clarifier:		

	Paragraph	Page
Background	5-52	5-68
Bibliography	5-59	5-80
Categories	5-51	5-67
Cost data	5-58	5-80
Definition	5-50	5-67
Design parameters	5-54	5-70
Design procedure	5-55	5-70
Example calculations	5-57	5-76
Input data	5-53	5-68
Output data	5-56	5-75
Sedimentation tank	Figure 5-8	5-69
Secondary clarifier:		
Background	5-60	5-83
Bibliography	5-67	5-90
Cost data	5-66	5-90
Design parameters	5-62	5-84
Design procedure	5-63	5-85
Example calculations	5-65	5-87
Input data	5-61	5-83
Output data	5-64	5-86
Settling tanks	Table 5-11	5-91
Sludge hauling and landfilling:		
Background	5-113	5-169
Bibliography	5-120	5-174
Cost data	5-119	5-174
Design parameters	5-115	5-171
Design procedure	5-116	5-171
Example calculations	5-118	5-173
Input data	5-114	5-170
Output data	5-117	5-172
Thickening (gravity):		
Background	5-42	5-57
Bibliography	5-49	5-63
Cost data	5-48	5-63
Design parameters	5-44	5-59
Design procedure	5-45	5-59
Example calculations	5-47	5-63
Input data	5-43	5-59
Output data	5-46	5-63
Vacuum filtration:		
Average chemical doses for	Table 5-19	5-129
Background	5-76	5-119

	Paragraph	Page
Bibliography	5-83	5-127
Centrifuge performance	Table 5-23	5-138
Cost data	5-82	5-127
Design parameters	5-78	5-121
Design procedure	5-79	5-121
Example calculations	5-81	5-124
Expected performance	Table 5-22	5-130
Input data	5-77	5-121
Output data	5-80	5-124
Polyelectrolyte doses for	Table 5-20	5-129
Plug flow activated sludge (See Biological unit processes and Cost data and analysis)		
Polyelectrolytes (See Physical unit processes)		
Screening (See Cost data and economic analysis and Physical unit processes)		
Screens (See Screening)		
Sedimentation (See Cost data and economic analysis and Physical unit processes)		
Sludge (See Biological unit processes and Cost data and economic analysis)		
Step aeration (See Biological unit processes and Cost data and economic analysis)		
Thickeners (See Thickening)		
Thickening (See Cost data and economic analysis and Physical unit processes)		
Trickling filters (See Biological unit processes and Cost data and economic analysis)		
Urban Studies Program:		
Area planning:		
Duplication of effort	1-4b(2)	1-1
Responsibility	1-4b(1)	1-1
Leadership	1-4b(1)	1-1
Vacuum filtration (See Cost data and economic analysis and Physical unit processes)		
Waste:		
Flow:		
Average	2-2a,b	2-1
Calculations	2-2a(2)	2-1
Domestic	Table 2-2	2-3
	3-2c	3-2

	Paragraph	Page
Factors affecting reading	2-2a(1)	2-1
Maximum reading	2-2b	2-2
Minimum reading	2-2b	2-2
Peak reading	2-2b	2-2
Residential	Table 2-1	2-3
Wastewater:		
Composition	1-4d	1-2
Infiltration	2-2c	2-2
Inflow	2-2c	2-2
Quality	2-3	2-2
Systems:		
Bibliography	4-5	4-3
Design criteria	1-1	1-1
Design equations and practices	4-3a-g	4-1
Design factors	3-1	3-1
Economic analysis	4-4	4-3
Phases of design	3-2	3-2
Physical unit processes	5-1a-q	5-1
Planning	4-5a,b	4-3
Problems of design	1-5a-g	1-2
Selection of	1-1	1-1
	3-1b(1)-(12)	3-1
	3-2d	3-2
Site selection	3-1a(1)-(12)	3-1
Wastewater treatment:		
Process selection	4-1a-g	4-1
Process substitution diagram	4-2	4-1
Water consumption, average	2-2a,b	2-1

*U.S. GOVERNMENT PRINTING OFFICE : 1979 0-620-007/3776

U.S. Environmental Protection Agency
Region V, Library
230 South Dearborn Street
Chicago, Illinois 60604