EPA-453/D-95-002

United States Environmental Protection Agency

Office of Air Quality Planning and Standards Research Triangle Park NC 27711

August 1995

Air

EPA

Guideline Series

Control of Volatile Organic Compound Emissions from Wood Furniture Manufacturing Operations

DRAFT DOCUMENT

CTG

EPA-453/D-95-002

Guideline Series

Control of Volatile Organic Compound Emissions from Wood Furniture Manufacturing Operations--Draft

Emission Standards Division

U. S. Environmental Protection Agency
Office of Air and Radiation
Office of Air Quality Planning and Standards
Research Triangle Park, NC 27711

August 1995

U.S. Environmental Protection Agency
Region 5, Library (PL-12J)
77 West Jackson Boulevard, 12th Floor
Chicago, IL 60604-3590

GUIDELINE SERIES

The guideline series of reports is issued by the Office of Air Quality Planning and Standards (OAQPS) to provide information to State and local air pollution control agencies. Mention of trade names or commercial products is not intended to constitute endorsement or recommendation for use. Reports published in this series will be available - as supplies permit - from the Library Services Office (MD-35, U. S. Environmental Protection Agency, Research Triangle Park, North Carolina 27711, or for a nominal fee, from the National Technical Information Service, 5285 Port Royal Road, Springfield, Virginia 22161.

TABLE OF CONTENTS

		Page
1.0	INTRODUCTION	1-1
	1.1 THE REGULATORY NEGOTIATION PROCESS	1-2
	1.2 DEVELOPMENT OF THE CTG THROUGH REGULATORY NEGOTIATION	1-3
2.0	INDUSTRY DESCRIPTION	2-1
	2.1 INDUSTRY STRUCTURE	2-1
	2.2 FINISHING PROCESS	2-8
	2.2.1 Finish Application Methods	2-10
	2.2.2 Finishing Materials	2-13
	2.2.3 Finishing Sequences	2-18
	2.3 EMISSION SOURCES	2-20
	2.3.1 Industry Source Definition	2-20
	2.3.2 Emission Sources	2-20
	2.3.3 VOC Emission Summary	2-26
	2.4 EXISTING REGULATIONS	2-28
	2.4.1 Introduction	2-28
	2.4.2 Summary of Existing Regulations	2-29
	2.5 REFERENCES FOR CHAPTER 2	2-37
3.0	EMISSION CONTROL TECHNIQUES	3-1
	3.1 ADD-ON CONTROL DEVICES	3-1
	3.1.1 Combustion Control Devices	3-2
	3.1.2 Recovery Devices	3-12
	3.1.3 Methods of Minimizing Control Costs--Volume Reduction	3-24
	3.1.4 Total Enclosure of the Finishing Line	3-30
	3.2 LOWER VOC FINISHES	3-32
	3.2.1 Use of Lower VOC Finishing Materials	3-33
	3.2.2 Applicability of Lower-VOC Finishes to Wood Furniture Finishing Operations	3-45
	3.2.3 Advantages and Disadvantages of Lower VOC Finishes	3-50
	3.3 EMERGING/SPECIALIZED TECHNOLOGIES	3-52
	3.3.1 Mobile Zone Spray Booth	3-53
	3.3.2 Three-Dimensional Ultraviolet Curing	3-54
	3.3.3 Biofiltration	3-55
	3.4 MINIMIZATION OF FINISH/SOLVENT USAGE AND EVAPORATION	3-57
	3.4.1 Required Work Practices	3-57
	3.4.2 Reduction in Cleaning Material Usage	3-60
	3.4.3 Washoff Operations	3-64
3.5	REFERENCES FOR CHAPTER 3	3-66

TABLE OF CONTENTS (continued)

		Page
4.0	MODEL PLANTS AND EMISSIONS ESTIMATES	4-1
	4.1 MODEL PLANTS	4-1
	4.1.1 Finish Application Method	4-5
	4.1.2 Finishing Sequence	4-5
	4.1.3 Model Plant Sizes	4-6
	4.1.4 Finish Parameters	4-10
	4.2 EMISSIONS ESTIMATES	4-12
	4.2.1 Emissions by Finishing Step	4-13
	4.2.2 Emissions by Emission Point	4-13
	4.3 REFERENCES FOR CHAPTER 4	4-19
5.0	SELECTION OF RACT	5-1
	5.1 BACKGROUND	5-1
	5.2 SELECTION OF REFERENCE CONTROL TECHNOLOGIES	5-2
	5.3 SELECTION OF WORK PRACTICE STANDARDS	5-6
	5.3.1 Coating Operations	5-7
	5.3.2 Cleaning and Washoff Operations	5-10
	5.3.3 General Work Practice Requirements	5-14
	5.4 SELECTION OF COMPLIANCE PROVISIONS	5-15
	5.5 SMALL BUSINESS CONSIDERATIONS	5-16
	5.6 REFERENCES FOR CHAPTER 5	5-18
6.0	COST, ENVIRONMENTAL, AND ENERGY IMPACTS	6-1
	6.1 COST OF THE RECOMMENDED RACT OPTIONS	6-2
	6.1.1 Limitation on VOC Content of Coatings	6-2
	6.1.2 Application Equipment Requirements	6-8
	6.1.3 Work Practice Standards	6-10
	6.2 MODEL PLANT COSTS	6-11
	6.3 NATIONWIDE IMPACTS OF PRESUMPTIVE RACTS	6-14
	6.3.1 Nationwide Emission Reductions	6-21
	6.3.2 Nationwide Costs	6-23
	6.4 ENVIRONMENTAL AND ENERGY IMPACTS	6-23
	6.4.1 Environmental Impacts	6-23
	6.4.2 Energy Impacts	6-26
	6.4.3 Other Environmental Impacts	6-26
	6.5 IMPACTS OF OTHER CONTROL OPTIONS	6-27
	6.5.1 Hybrid Waterborne	6-31
	6.5.2 Full Waterborne	6-33
	6.5.3 Add-On Controls	6-33
	6.6 REFERENCES FOR CHAPTER 6	6-37

TABLE OF CONTENTS (continued)

		Page
7.0	RACT IMPLEMENTATION	7-1
	7.1 INTRODUCTION	7-1
	7.2 DEFINITIONS	7-2
	7.3 APPLICABILITY	7-2
	7.4 FORMAT OF STANDARDS	7-4
	7.5 COMPLIANCE AND MONITORING PROVISIONS	7-7
	7.5.1 Compliance Provisions	7-7
	7.5.2 Monitoring Requirements	7-9
	7.6 REPORTING AND RECORDKEEPING	7-13

LIST OF FIGURES

		Page
Figure 3-1.	Thermal incinerator--general case	3-3
Figure 3-2.	Regenerable-type thermal incinerator	3-6
Figure 3-3.	Catalytic incinerator	3-10
Figure 3-4.	Typical two-bed, continuously operated fixed-bed carbon adsorber system	3-16

LIST OF TABLES

		Page
TABLE 1-1.	WOOD FURNITURE NESHAP REGULATORY NEGOTIATION COMMITTEE MEMBERSHIP	1-6
TABLE 2-1.	WOOD FURNITURE INDUSTRY STRUCTURE	2-2
TABLE 2-2.	WOOD FURNITURE SIC CATEGORIES	2-3
TABLE 2-3.	WOOD FURNITURE FACILITIES BY EPA REGION . .	2-4
TABLE 2-4.	1990 FDM 300 TOP 10 FURNITURE MANUFACTURERS	2-7
TABLE 2-5.	FINISHING MATERIALS USED IN THE WOOD FURNITURE INDUSTRY	2-14
TABLE 2-6.	TYPICAL FINISHING SEQUENCES	2-18
TABLE 2-7.	WOOD FURNITURE INDUSTRY STRUCTURE BY FINISHING SEQUENCE	2-19
TABLE 2-8.	SPRAY BOOTH CHARACTERISTICS	2-22
TABLE 2-9.	SOLVENT CONSUMPTION IN PAINTS AND COATINGS ORIGINAL EQUIPMENT MANUFACTURERS (OEM), 1989	2-27
TABLE 2-10.	WOOD FURNITURE INDUSTRY SOLVENT USAGE--1989	2-28
TABLE 2-11.	REGULATORY SUMMARY--WOOD FURNITURE COATING .	2-30
TABLE 2-12.	VOC CONTENT LIMITATIONS--WOOD FURNITURE FINISHING	2-36

LIST OF TABLES (continued)

		Page
TABLE 3-1.	LOWER-VOC FINISH ALTERNATIVES--FINISH SUPPLIERS' COMPARISON OF FINISH PROPERTIES .	3-51
TABLE 3-2.	WORK PRACTICE REQUIREMENTS -- PRESUMPTIVE RACT	3-58
TABLE 3-3.	COMMERCIALLY AVAILABLE SPRAY GUN WASHING UNITS	3-62
TABLE 3-4.	LOW-VOLATILITY ALTERNATIVE SOLVENTS	3-63
TABLE 4-1.	CHARACTERISTICS OF MODEL PLANT CATEGORIES .	4-3
TABLE 4-2.	MODEL PLANT DESCRIPTIONS	4-4
TABLE 4-3.	RANGES OF VOC USAGE AND EMPLOYMENT DATA FOR MODEL PLANTS	4-7
TABLE 4-4.	FINISHING MATERIAL CHARACTERISTICS	4-9
TABLE 4-5.	RELATIVE PERCENTAGE OF VOC EMISSIONS	4-12
TABLE 4-6.	MODEL PLANT SUMMARY--UNCONTROLLED VOC EMISSION RATES, tons/yr	4-13
TABLE 4-7.	EMISSIONS DISTRIBUTION, tons/yr	4-15
TABLE 4-8.	EMISSIONS DISTRIBUTION, tons/yr	4-19
TABLE 5-1.	REFERENCE CONTROL TECHNOLOGIES TO MEET RACT	5-3
TABLE 5-2.	WORK PRACTICE STANDARDS TO MEET RACT	5-8
TABLE 6-1.	COST BY MODEL PLANT FOR PLANTS CONVERTING TO HIGHER SOLIDS SEALER AND TOPCOAT	6-15
TABLE 6-2.	COST BY MODEL PLANT FOR PLANTS CONVERTING TO WATERBORNE TOPCOATS	6-16
TABLE 6-3.	MODEL PLANT CONTROL COSTS FOR PRESUMPTIVE RACT	6-17
TABLE 6-4.	DISTRIBUTION OF WOOD FURNITURE PLANTS IN NONATTAINMENT AREAS BY MODEL PLANT . . .	6-18
TABLE 6-5.	BASELINE AND CONTROLLED VOC EMISSIONS . . .	6-22
TABLE 6-6.	NATIONWIDE CONTROL COSTS FOR PRESUMPTIVE RACT	6-24

LIST OF TABLES (continued)

		Page
TABLE 6-7.	ENERGY USE ASSOCIATED WITH WATERBORNE TOPCOATS	6-26
TABLE 6-8.	INDUSTRY REPORT MODEL PLANTS	6-29
TABLE 6-9.	EARLIER DRAFT CTG MODEL PLANTS	6-30
TABLE 6-10.	EMISSION REDUCTIONS AND COST EFFECTIVENESS OF HYBRID WATERBORNE COATING SYSTEM	6-32
TABLE 6-11.	EMISSION REDUCTIONS AND COST EFFECTIVENESS OF FULL WATERBORNE COATING SYSTEM	6-34
TABLE 6-12.	EMISSION REDUCTIONS AND COST EFFECTIVENESS OF ADD-ON CONTROL DEVICES	6-35

1.0 INTRODUCTION

The Clean Air Act Amendments (CAAA) of 1990 require that State implementation plans (SIP's) for certain ozone nonattainment areas be revised to require the implementation of reasonably available control technology (RACT) for control of volatile organic compound (VOC) emissions from sources for which EPA has already published Control Techniques Guidelines (CTG's) or for which the U. S. Environmental Protection Agency (EPA) will publish a CTG between the date of enactment of the amendments and the date an area achieves attainment status. Section 172(c)(1) requires nonattainment area SIP's to provide, at a minimum, for "such reductions in emissions from existing sources in the area as may be obtained through the adoption, at a minimum, of reasonably available control technology ..." As a starting point for ensuring that these SIP's provide for the required emission reduction, EPA in the notice at 44 FR 53761 (September 17, 1979) defines RACT as: "The lowest emission limitation that a particular source is capable of meeting by the application of control technology that is reasonably available considering technological and economic feasibility." The EPA has elaborated in subsequent notices on how States and EPA should apply the RACT requirements (see 51 FR 43814, December 1989; and 53 FR 45103, November 8, 1988).

The CTG's are intended to provide State and local air pollution authorities with an information base for proceeding with their own analyses of RACT to meet statutory requirements. The CTG's review current knowledge and data concerning the technology and costs of various emission control techniques. Each CTG contains a "presumptive norm" for RACT for a specific

source category, based on EPA's evaluation of the capabilities and problems specific to that category. Where applicable, EPA recommends that States adopt requirements consistent with the presumptive norm. However, the presumptive norm is only a recommendation. States may choose to develop their own RACT requirements on a case-by-case basis, considering the economic and technical circumstances of an individual source. It should be noted that no laws or regulations preclude States from requiring more control than recommended as the presumptive norm for RACT. A particular State, for example, may need a more stringent level of control in order to meet the ozone standard or to reduce emissions of a specific toxic air pollutant.

This CTG is 1 of at least 11 CTG's that EPA was required to publish within 3 years of enactment of the CAA amendments. It addresses RACT for control of VOC emissions from wood furniture coating and cleaning operations. This document is currently in draft form and is being distributed for public comment. Public comments will be reviewed and incorporated as judged appropriate before EPA finalizes the CTG.

Unlike traditional development of CTG's for which a determination of RACT involves the identification and extensive analyses of a list of options, the determination of presumptive RACT for the wood furniture industry was negotiated under the Federal Advisory Committee Act with members of industry, environmental groups, States, and local agencies. Included in this chapter is a brief description of the regulatory negotiation process, a discussion of the process that led to the decision to negotiate presumptive RACT, and a brief discussion of the regulatory negotiation process for the wood furniture industry.

1.1 THE REGULATORY NEGOTIATION PROCESS

In a regulatory negotiation, a well-balanced group representing the industry to be regulated, public interest groups, state and local governments, and the EPA form a federally chartered advisory committee to negotiate the requirements of a rule. A neutral facilitator is used to convene the committee and to manage its meetings. In a regulatory negotiation, decisions

are made by consensus, not by majority vote. Consensus is defined by the committee prior to the start of its deliberations, however, it is generally defined as an agreement by all parties that they can live with the provisions of the rule.

There are several advantages to the regulatory negotiation process. The process allows the interested, affected parties a more direct input into the drafting of the regulation, thus ensuring that the rule is more sensitive to the needs and restrictions of all parties. The regulatory negotiation committee can draw on the diverse experience and creative skills of the committee members to address problems encountered in crafting the regulation. The group together may be able to propose solutions to difficult problems that no one member could have thought of on his/her own.

1.2 DEVELOPMENT OF THE CTG THROUGH REGULATORY NEGOTIATION

In the fall of 1989, EPA began developing the CTG for the wood furniture industry. The EPA sent out surveys to wood furniture manufacturers, wood furniture coating suppliers, application equipment vendors, and manufacturers of add-on controls. They also visited several wood furniture manufacturing plants. The information collected from these efforts was used to develop a draft CTG. Drafts of Chapters 1 through 4 of the CTG were released in October of 1991 and the status of the CTG and the basis for selecting the RACT options were presented at a meeting of the National Air Pollution Control Techniques Advisory Committee (NAPCTAC) in November of 1991. A determination of RACT was not made by EPA at this point in time.

In the spring of 1991, the industry began preparation of its own report that evaluated VOC emissions control technologies for the wood furniture and cabinet industries. The report was prepared by an independent contractor and was sponsored by the American Furniture Manufacturers Association, the Business and Institutional Furniture Manufacturers Association, the Kitchen Cabinet Manufacturers Association, and the National Paint and Coatings Association. The report evaluated the technical feasibility and the costs of control technologies for reducing

VOC emissions from the industry. An extensive analysis of the economic impacts of the control technologies was also included as a part of the report. The report did not present a recommendation for RACT.

As the draft CTG and the industry report were being completed, EPA also began work on a national emission standard for hazardous air pollutants (NESHAP) for the wood furniture industry. Title III of the Clean Air Act Amendments of 1990 gave EPA the authority to establish national standards to reduce air toxics from sources that emit such pollutants. Section 112(b) of the CAAA included a list of hazardous air pollutants (HAP) that were to be regulated by NESHAP. Because the wood furniture manufacturing industry is a source of many of these pollutants, it was included on the list of source categories for which a NESHAP was to be developed. By the time the draft CTG and the industry report were released, EPA had already begun gathering information to be used in the development of a NESHAP for the industry.

In January of 1992, EPA met with industry representatives to discuss the industry report and the status of the CTG and NESHAP. The industry expressed their concern that the requirements of the CTG and the NESHAP might not be consistent with each other. Because the development of the CTG was ahead of the NESHAP, the industry was concerned that they would invest in one set of technologies to address the CTG requirements and then have to invest later in different technologies for the NESHAP. In response to their concerns, EPA presented industry with the option of determining both the presumptive norm for RACT and the requirements of the NESHAP using a consensus-building approach. The EPA indicated that this approach could consist of continued informal meetings between EPA and the industry or it could consist of a formal regulatory negotiation in which the industry, EPA, and other interested parties form a Federal Advisory Committee with the goal of reaching agreement on both the presumptive norm for RACT and the requirements of the NESHAP.

In April of 1992, the industry informed EPA that they wished to explore the option of using a regulatory negotiation approach to develop the CTG and the NESHAP for the wood furniture industry. The EPA agreed to pursue the possibility of using a regulatory negotiation approach to develop the CTG and the NESHAP. During the winter of 1992/1993, EPA met with representatives of the industry, trade associations, coating suppliers, States, and environmental groups to discuss issues, share information, and assess whether a regulatory negotiation would be appropriate for the industry. Two exploratory meetings were held for these purposes. After the exploratory meetings, three public meetings were held in the spring and early summer of 1993 to continue to discuss issues associated with regulatory development. After publishing in the Federal Register on June 23, 1993, a notice of establishment of the regulatory negotiation committee (58 FR 34011), the first official regulatory negotiation meeting was held in July 1993. The Committee included representatives from industry, including small business, States, environmental and public health groups, and an EPA representative. Table 1 presents the list of committee members and their affiliations.

Formal meetings and informal workshops were held over the next several months to identify and resolve the many issues associated with determining the presumptive norm for RACT for the wood furniture manufacturing industry. The Federal Advisory Commitee reached consensus on a framework and principles in November 1994. The U. S. Environmental Protection Agency is responsible for issuing the CTG, and has agreed to use the agreed-upon framework and principles as the basis for the CTG.

The wood furniture industry is described in Chapter 2 and emission control techniques are discussed in Chapter 3. The development of model plants and the associated emission estimates are described in Chapter 4. A detailed discussion of the requirements of the presumptive norm for RACT that were agreed upon by the Committee is included in Chapter 5, while Chapter 6

TABLE 1. WOOD FURNITURE NESHAP REGULATORY NEGOTIATION COMMITTEE MEMBERSHIP

Members	Affiliations
Freeman Allen	Sierra Club
Terry Black[a]	PA Department of Environmental Resources
Jack Burgess	Pridgen Cabinet Works (Small Business)
Gerry Currier	AKZO Coatings
William Deal	Bernhardt Furniture Company (Office Furniture)
John DeVido	Aqualon (Resins)
William Dorris	Lilly Industries (Coatings)
Jack Edwardson	U. S. Environmental Protection Agency
Paul Eisele	MASCO Corporation
Jon Heinrich	WI Department of Natural Resources
Gary Hunt	NC Office of Waste Reduction
Alan Klimek	NC Department of Environment, Health, and Natural Resources
John Lingelbach	Facilitator
Brian Morton	NC Environmental Defense Fund
Peter Nicholson	Rohm and Haas (Resins)
Susan Perry	Business and Institutional Furniture Manufacturers Association
Andy Riedell	PPG Industries (Coatings)
David Rothermel	Stylecraft Corporation (Small Business)
William Sale	Broyhill Furniture (Residential Furniture)
Mike Soots	Kincaid Furniture (Residential Furniture)
Richard Titus	Kitchen Cabinet Manufacturers Association
Janet Vail	West MI Environmental Action Council
Stephen Willcox	American Lung Association of NC
Susan Wildau	Facilitator
John Zeltsman	Architectural Woodwork Institute (Small Business)

[a]Left the State of Pennsylvania in December 1993 and is now with Rettew Associates in Lancaster, Pennsylvania.

presents the environmental and cost impacts of those requirements.

2.0 INDUSTRY DESCRIPTION

2.1 INDUSTRY STRUCTURE

The structure of the wood furniture industry is presented in Table 2-1.[1-3] There are nine Standard Industrial Classification (SIC) codes which cover what was analyzed for the development of the Control Techniques Guideline for the "wood furniture" industry. The nine SIC codes include Wood Kitchen Cabinets; Wood Household Furniture (except upholstered); Wood Household Furniture (upholstered); Wood Television, Radios, Phonograph, and Sewing Machine Cabinets; Household Furniture Not Classified Elsewhere; Wood Office Furniture; Public Building and Related Furniture; Wood Office and Store Fixtures, and Furniture and Fixtures Not Elsewhere Classified. A more detailed description of the products included in these industries is provided in Table 2-1. Three of the SIC codes, 2519, 2531, and 2599, include the manufacture of nonwood products. However, the CTG will apply only to those products manufactured of wood and wood products (including particle board, reed, rattan, wicker, etc.) Table 2-2 presents the relative number of facilities in each of the nine SIC codes (based on the 1987 Census data).[1-3] Facilities in SIC codes that manufacture furniture that can be labeled as wood household or residential constitute approximately 34 percent of the total and are concentrated in western North Carolina; wood kitchen cabinet manufacturers represent about 29 percent of the total and are concentrated in Pennsylvania and the Midwest. Facilities in SIC codes that manufacture products that can be labeled as business or office furniture represent 24 percent of furniture manufacturing facilities and these facilities are concentrated in Michigan.[4] The number of wood furniture

TABLE 2-1. WOOD FURNITURE INDUSTRY STRUCTURE[1-3]

SIC Code	Industry	Typical products	No. of establishments[a]				No. of employees[a]			
			Small	Medium	Large	Total	Small	Medium	Large	Total
2434	Wood kitchen cabinets	Cabinets (to be built-in) Cabinets (factory made) Vanities (bathroom and other)	3,460	218	35	3,713	29,700	22,800	14,500	67,000
2511	Wood household furniture, except upholstered	Beds, bookcases, buffets, chairs, chests, coffee tables, cradles, cribs, dressers, rockers, secretaries, stools, tables	2,466	344	138	2,948	22,800	37,800	75,300	135,900
2512	Wood household furniture, upholstered	Chairs, couches, davenports, living room furniture, rockers, sofas	782	292	76	1,150	10,700	32,600	38,800	82,100
2517	Wood television, radios, phonograph and sewing machine cabinets	Phonograph cabinets and cases, radio cabinets and cases, sewing machine cabinets and cases, stereo cabinets, television cabinets	61	11	8	80	700	1,400	3,800	5,900
2519	Household furniture not elsewhere classified	Bassinets, camp furniture, reed and rattan, other wicker furniture, chairs, cabinets, garden and lawn furniture	150	22	5	177	1,400	2,200	2,300	5,900
2521	Wood office furniture	Benches, bookcases, cabinets, chairs, desks, filing boxes, furniture, stools, tables	505	113	31	649	5,300	12,300	13,500	31,100
2531	Public building and related furniture	Benches, blackboards, bleachers, chairs, church furniture, seats	381	95	15	491	5,000	9,900	6,900	21,800
2541	Wood office and store fixtures, partitions, shelving and lockers	Shelves, lockers, office and store fixtures, fixture tops and related fabricated products, chiefly of wood. Selected prefabricated partitions.	1,672	184	10	1,866	20,000	17,200	3,500	40,700
2599	Furniture and fixtures not elsewhere classified	Furniture for restaurants, hospitals, bowling centers, and ships	1,447	144	6	1,597	12,300	13,500	3,400	29,200
TOTAL			10,924	1,423	324	12,671	107,900	149,700	160,000	419,600

[a]By employment size: small = 1 to 49 employees, medium = 50 to 249 employees, large = 250 or more employees.

TABLE 2-2. WOOD FURNITURE SIC CATEGORIES[1-3]

SIC code	Industry	Percentage of total facilities[a]
2434	Wood kitchen cabinets	29
2511	Wood household furniture, except upholstered	23
2512	Wood household furniture, upholstered	9
2517	Wood television, radios, phonograph, and sewing machine cabinets	b
2519	Household furniture, not elsewhere classified	b
2521	Wood office furniture	5
2531	Public building and related furniture	4
2541	Wood office and store fixtures, partitions, shelving, and lockers	15
2599	Furniture and fixtures, not elsewhere classified	13

[a]Based on 12,671 establishments for the nine SIC codes.
[b]Less than 1 percent.

manufacturing facilities by EPA region is presented in Table 2-3. The largest number of facilities, 2,721, are located in Region IV, which includes the southeast States; Region IX, which includes California, has 2,007 facilities.[1-3]

As shown in Table 2-1, the wood furniture industry is comprised primarily of small plants; 86 percent of the facilities have fewer than 50 employees. In comparison, large facilities constitute only 3 percent of all wood furniture facilities. Wood furniture facilities with more than 20 employees are concentrated in North Carolina and California.[4] Small facilities are usually batch operations, are not generally automated, and have a comparatively low level of inhouse technical expertise. Large facilities are usually highly automated, continuous operations.

Furniture Design and Manufacturing magazine ranks the top 300 wood furniture plants every year by total annual sales (referred to as the FDM 300).[5] The 1990 FDM 300 overall ranking assigns Steelcase No. 1, Masco No. 2, Interco No. 3, and Herman

TABLE 2-3. WOOD FURNITURE FACILITIES BY EPA REGION[1-3]

	Total facilities[a]	Facilities with 20 employees or more
Region I		
Connecticut	147	35
Maine	20	7
Massachusetts	272	72
New Hampshire	52	14
Rhode Island	11	5
Vermont	31	13
	533	146
Region II		
New Jersey	447	65
New York	748	1,195
	1,195	1,260
Region III		
Maryland	141	30
Pennsylvania	448	149
Virginia	229	81
West Virginia	10	2
	828	262
Region IV		
Alabama	203	69
Florida	868	134
Georgia	318	82
Kentucky	98	31
Mississippi	167	90
North Carolina	690	353
South Carolina	79	24
Tennessee	298	123
	2,721	906
Region V		
Illinois	351	104
Indiana	313	131
Michigan	283	91
Minnesota	219	49
Ohio	325	81
Wisconsin	232	69
	1,723	525
Region VI		
Arkansas	117	44
Louisiana	23	3
New Mexico	72	8
Oklahoma	34	11
Texas	468	135
	714	201

TABLE 2-3. (continued)

	Total facilities[a]	Facilities with 20 employees or more
Region VII		
Iowa	53	25
Kansas	52	20
Missouri	166	52
Nebraska	28	9
	299	106
Region VIII		
Colorado	156	26
North Dakota	18	5
South Dakota	10	2
Utah	91	28
	275	61
Region IX		
Arizona	190	42
California	1,789	527
Nevada	28	6
	2,007	575
Region X		
Idaho	25	2
Oregon	178	31
Washington	259	48
	462	81

[a]No data available for States not listed. Includes information for the following SIC codes: 2434, 2511, 2512, 2517, 2519, 2521, 2531, and 2541.

Miller No. 4. (The 1991 ranking placed Herman Miller as No. 3 and Interco as No. 4). The 1990 FDM 300 also ranks the top 10 companies in three categories of wood furniture, including residential, office/institutional, and kitchen cabinet furniture manufacturers. These companies, and their corresponding annual sales, are presented in Table 2-4 (the 1991 ranking was not broken down by industry segment and is therefore not presented). Masco Corporation, which manufactures both household/residential furniture and kitchen cabinets, is the parent company of many well-known companies including Merillat Industries, Henredon Furniture Industries, Fieldstone Cabinetry, and Universal Furniture. Interco Corporation, which makes household/residential furniture, includes Broyhill Furniture, Ethan Allen, and The Lane Company, among others. Of kitchen cabinet manufacturers, Merillat is believed to control the largest portion of the market, approximately 10 percent.[6,7] No single company is believed to control more than 5 to 6 percent of the household/residential furniture market.[8]

The "wood furniture industry" is commonly grouped as household/residential furniture, office/business furniture, and kitchen cabinet furniture. Facilities that produce these types of furniture may be grouped together throughout the discussion in this chapter. These are intended to be general labels that provide basic information about a facility's final product and that identify the use and destination of the final product; the generalizations are not intended as descriptive classifications of the manufacturing process. For example, manufacturers within the household/residential group may use a variety of different raw materials and manufacturing methods. Differences would be apparent in finish application methods, finishing sequences, types of wood or wood product used, and types of finishes used. The household/residential, office/business, and kitchen cabinet groupings are qualitative descriptions and were not used in categorizing the industry for control technique analysis.

There are many different grades and styles of furniture. The three grades of furniture are often described by the industry

TABLE 2-4. 1990 FDM 300 TOP 10 FURNITURE MANUFACTURERS[5]

Market	Rank	Name	Annual sales, million $
Residential	1	Masco Corp.	1,200[a]
	2	Interco	1,100[b]
	3	Ohio Mattress Co.	700[b]
	4	La-Z-Boy Chair Co.	553[b]
	5	Bassett Furniture, Industries, Inc.	466[b]
	6	Ladd Furniture	450[b c]
	7	Simmons USA	425[b]
	8	Thomasville Furniture Industries, Inc.	417[a]
	9	Mohasco Corp.	400[a]
	10	Klaussner Furniture Industries	250[b]
Kitchen cabinet	1	Masco Corp.	300[a]
	2	Triangle Pacific Corp.	185[b c]
	3	WCI Cabinet Group	180[b]
	4	American Woodmark Corp.	160[b]
	5	Aristokraft	>130[b]
	6	KraftMaid Cabinetry, Inc.	<100[b c]
	7	Wood-Mode Cabinetry	85[a]
	8	Rivera Cabinets	80[b]
	9	HomeCrest Inc.	60[a]
	10	The St. Charles Companies	58[a]
Office/institutional	1	Steelcase, Inc.	1,800[b]
	2	Herman Miller, Inc.	793[b]
	3	Haworth, Inc.	>500[b]
	4	HON Industries, Inc.	500[a c]
	5	Kimball International, Inc.	475[b]
	6	Knoll International	275[a c]
	7	Allsteel, Inc.	220[b c]
	8	Virco Manufacturing Corp.	183[a]
	9	Westinghouse Furniture Systems	170[b]
	10	Shelby William Industries, Inc.	169[b]

[a]Based on 1988 sales data.
[b]Based on 1989 annual sales data.
[c]Estimated.

as high-end, medium-end, and low-end. Generally, high-end furniture is constructed of solid wood and wood veneers and has the wood grain showing through the finish. The finishing process includes multiple finishing steps and is labor intensive. Low-end furniture, on the other hand, is often made of medium density fiberboard (MDF) with some plastic components and some natural wood. Also, the piece often has either a colored or printed wood grain finish, and the finishing process is less labor intensive. Medium-end furniture may be made of some combination of MDF and solid wood and may or may not show the natural wood grain. The cost of higher end furniture is more expensive due to the quality of materials used and the slow, labor intensive production process.[4]

For the same production level (or the same number of furniture pieces), the VOC emissions are greater for high-end furniture compared with those emitted from lower end furniture. The manufacture of high-end furniture often entails a series of finishing steps, up to 15 steps with multiple applications of some finishing steps, while low-end furniture involves fewer finishing steps (in some instances as few as one). More finishing steps are performed for each piece of higher end furniture than for low-end furniture, and therefore more VOC solvent is used. The difference in VOC emissions between plants with the same production levels makes it difficult to predict emissions from a particular plant based on production.[4] Though the low-, medium-, and high-end furniture designations are used frequently by the industry, they are qualitative descriptions and therefore were not used in categorizing the industry.

2.2 FINISHING PROCESS

The finishing process used in the wood furniture industry consists of some combination of finish application, sanding and rubbing, and drying in ovens and/or flashoff areas. Finishing application techniques include spray application and flatline finishing techniques and in some instances, hand application techniques. Wood furniture finishing basically consists of applications of a series of color coats (stains, toners, etc.)

and clear coats (washcoat, sealer, topcoat, etc.). The furniture piece may be sanded, rubbed, or polished and may pass through drying ovens or flashoff areas.

In the wood furniture finishing process, the finishes applied penetrate the wood and become an integral part of the final product. The finishes enhance the qualities and the look of the wood, especially for high-end furniture. Many different types of wood, fiberboard, and particleboard are used, and finishes react differently with each; a finishing step in a finishing sequence must be compatible not only with the wood substrate but also with the successive finishing steps. In the wood furniture industry, each type of finish used for a particular step within a finishing sequence is unique in color, solids content, VOC content, and carrier solvent; successive finishes must be formulated as part of a complimentary finishing system. A single limit on VOC level applicable to all finishes is difficult to require given the uniqueness of each finish type within a finishing sequence.[4]

Geographic location and seasonal changes affect the finishing material formulation used. Finishes required for use in dry, cool climates are different from finishes necessary for hot, humid climates. Often times, the necessary finish formulation may change seasonally within a single plant. The VOC content and composition is adjusted to account for changes in the drying time and the overall ease of application of each finish in relation to ambient temperature and the humidity.[4]

Some furniture facilities may operate more than one 8-hour shift per day. Finishing operations, however, usually only occur during the day shift. In some facilities, the finishing area is in a separate room, apart from the woodworking operations. In others, finishing occurs in a separate area within the same room as woodworking activities. The finishing process is often labor intensive, especially for some types of furniture manufacturing processes.

In small facilities the furniture is sometimes moved between stations manually. In most facilities, however, the furniture is

moved mechanically along the finishing line; the furniture may be moved by in-floor tow lines, overhead monorails, or by conveyor belt (mostly for flatline finishing). Tow-lines are chains or cables mounted in or on the floor, which move a pallet along the finishing line. The pallets can rotate and can be automatically disengaged from and reengaged to the tow-line to allow pauses, as needed. Some facilities move the furniture on pallets that are hung from overhead chain conveyors. Belt, roller, and slat conveyors are also used. Many facilities use a combination of these methods to transport the furniture along the finishing line.

Wood furniture can either be finished and then assembled, or assembled and then finished. In Europe, most furniture design is such that the individual components that make up a piece tend to be flatter and more uniform than those used in furniture manufactured in the United States. For this reason, furniture in Europe is often finished before assembly. Furniture manufactured in the United States, however, is generally made up of irregularly shaped, nonflat components, and most United States-made furniture is assembled and then finished (this is true mostly for household/residential and office/business). The exception is kitchen cabinets that are manufactured in the United States, which are frequently finished before assembly.

The application methods, the types of finishes, and the finishing sequences used in wood finishing are discussed in the following sections.

2.2.1 Finish Application Methods

There are various finish application techniques used in the wood furniture industry. The two principal methods used are flatline finishing and spray application. Flatline finishing is used to finish pieces that are generally flat. For nonflat pieces, preassembled pieces, or pieces with many recesses, this application method is generally not used. Brushing and dipping are feasible application methods in these instances, but spray application is the most prevalent method used to finish nonflat parts. In the wood furniture industry, spray application

accounts for 87 percent of finish application whereas flatline finishing accounts for 13 percent.[9]

2.2.1.1 Flatline Application. If components are finished before assembly and are flat or relatively flat, "flatline" simple finishing processes can be used. In flatline finishing, the furniture pieces are transported by conveyor and are finished by spray finishing, roll coating, curtain coating, or dip coating.[4,9] The industry denotes these as "continuous coaters" because the excess coating (that which does not remain on the part) is constantly recirculated to the coating reservoir and then reused. Fifty-five percent of flatline finishing is performed by dip coating; roll and curtain coating each account for 14 percent.[9] It is not known how the remaining flatline finishing is performed. (Subsequent references to flatline finishing in this discussion will refer to roll-, curtain-, or dip-type coating of furniture pieces.)

Roll coating involves the transfer of finish to a flat piece by a roller or series of rollers. Curtain coating involves passing a flat piece through a cascade, or curtain, of finishing material. In dip coating, the piece is finished by passing through a container (vat) of finishing material and by submerging or partially submerging and withdrawing the piece.

2.2.1.2 Spray Application. Since the majority of wood furniture manufactured in the United States consists of nonflat pieces, finishes are usually spray-applied. The spray technologies that can be used include conventional air, airless, air-assisted airless (AAA), electrostatic, the UNICARB® spray system, and high-volume low-pressure (HVLP).

The conventional air spray technique uses compressed air (at pressures greater than 10 pounds per square inch at the point of atomization) to atomize the finishing materials as they are being sprayed. Airless spraying involves atomizing the finish by forcing it through a small opening at high pressure. The liquid coating is not mixed with air before exiting the nozzle. Air-assisted airless spray uses an airless spray unit with a

compressed air jet to finalize breakup and help shape the spray pattern of the finish material.

Electrostatic finishing has long been used in the metalworking and automobile industries specifically to finish metal products. In the wood furniture industry, electrostatic spraying has had somewhat limited use, mostly by cabinet and chair manufacturers. Finishing is performed by spraying negatively-charged finish particles onto grounded wood products. If the wood piece has a sufficient moisture content to make it conductive, it can be electrostatically sprayed without pretreatment. However, some wood must be pretreated to make it conductive so that it will draw the negatively charged finish to its surface. Some of these pretreatments can be mixed with water to act as a carrier; some pretreatment materials, however, may contain VOC.

The UNICARB® system is a patented system for spray finishing developed by Union Carbide. A finishing material normally contains both coalescing (slow-evaporating) and diluent (fast-evaporating) solvents. The UNICARB® technology replaces the diluent solvents from the finish mixture with liquid carbon dioxide (CO_2). The CO_2/coalescing solvent finish mixture is used to finish the wood furniture products with an airless spray gun. When the finish leaves the spray nozzle, the carbon dioxide in the mixture immediately flashes; the paint, which still contains coalescing solvents, continues enroute to the piece. The deposited paint then flows and cures in the conventional way.

High-volume low-pressure spraying involves the use of a high volume of air delivered at an effectively low pressure to atomize a finish into a pattern of low-speed particles. The use of low pressure can result in decreased overspray, which translates into less finish usage and thus, less VOC emissions. Not all HVLP systems are alike. The most important distinction is between the two basic air supply designs. One type of HVLP system converts 80 to 100 pounds per square inch ($lb/in.^2$) shop air to 10 $lb/in.^2$ or lower. The other type of HVLP system uses a turbine generator to supply high volumes of air at low pressure.

According to a turbine-based HVLP system vendor, the turbine-based units can offer several advantages.[10] Some turbine units supply a heated air stream. In some instances, this heated air can improve coating flowability and speed drying. However, the airstream temperature is not always controllable, and depending on the finishing material characteristics and environmental conditions, the heated air stream is not always desirable. Because the turbine units do not use plant air, the HVLP systems are not affected if the existing shop air lines are not working at full capacity. The turbine units can be designed to supply air at a certain pressure, usually around 10 lb/in.^{2}. With these turbine units, it is not possible to achieve pressures greater than the design pressure (which is low). By limiting the available pressure, emissions can be minimized. The nonturbine HVLP systems convert shop air at 80 to 100 lb/in.^{2} to the lower pressure required by the HVLP gun. Because the shop air is available at pressures exceeding 10 lb/in.^{2}, enforcing a 10 lb/in.^{2} limit can be difficult.

Disadvantages to the turbine HVLP units have also been identified.[11] In some instances, turbine systems offer insufficient pressure to provide effective atomization with higher viscosity materials. If less than 10 lb/in.^{2} is supplied to the HVLP gun, poor atomization may result unless the finish is cut with solvents to lower the viscosity. A disadvantage of HVLP systems in general is that the HVLP systems are reportedly not always able to apply finishes as quickly as the other spray techniques. However, an air assisted airless HVLP gun has been developed. The air pressure is limited to 10 lb/in.^{2}, but reportedly the use of higher fluid pressures enables the guns to supply finishes at rates comparable to airless and air assisted airless spraying.[12]

2.2.2 Finishing Materials

The wood furniture finish is applied in a series of steps. There is great variety in the number, type, and order of finishing steps that are applied. Different types of the seven different finishes described below are available, including

conventional low-solids lacquers and relatively higher-solids conversion finishes, polyurethane finishes, and unsaturated polyester/unsaturated polyacrylate (UPE/UPA) finishing materials. The types of wood furniture finishes used in the U.S., Europe, and Japan are presented in Table 2-5.[13]

TABLE 2-5. FINISHING MATERIALS USED IN THE WOOD FURNITURE INDUSTRY[13]

Region	Percent			
	Lacquers	Conversion finishes	Polyurethane finishes	UPE/UPA finishes[a]
USA	75	15	4	6
Europe	29	17	32	22
Japan	32	17	30	20

[a]Unsaturated polyester/unsaturated polyacrylate finishes.

In the United States, lacquers (mostly nitrocellulose-based) are used by approximately 75 percent of the wood furniture industry (commonly household/residential furniture). Nitrocellulose lacquers have been used in the wood furniture industry for many years; they are easy to use (forgiving), quick drying, easy to repair, and familiar. Approximately 15 percent of the wood furniture industry uses conversion finishing materials (mostly acid-catalyzed finishes).[14] To date, polyurethane and unsaturated polyester and unsaturated polyacrylate finishing materials have seen limited use in the U.S.

In Europe, lacquers are not used as extensively as polyurethane finishes, as seen in Table 2-5. Approximately 32 percent of the wood furniture industry in Europe uses polyurethane finishing materials, 29 percent uses lacquers, 22 percent uses unsaturated polyester/unsaturated polyacrylate finishes, and 17 percent uses urea or melamine resin-based conversion finishes. The breakdown of finish usage is similar in Japan.[13] The lacquers used by the European wood furniture industry are used primarily by the residential wood furniture manufacturers. The kitchen cabinet industry in Europe uses two-

component polyurethane systems and unsaturated polyester/ polyacrylate systems to a wider extent than the European furniture industry because they require additional chemical and mechanical resistance. Acid-curing conversion finishes are also used by the European kitchen cabinet industry, but their use is decreasing (possibly over concern with the associated formaldehyde emissions).[14]

The basic steps in wood furniture finishing (in generally-used order) and their purposes are as follows:

1. Stain.[15-25] Adds initial color, evens out color and accents the natural wood grain. Stains usually have a very low solids content (less than 5 percent by volume). Includes nongrain raising (NGR) stains such as equalizers, prestains, sap stains, and body stains; no-wipe stains and toners (discussed below). Nongrain raising stains are dye-type stains that are intended to give clarity and depth to the wood finish. Dye-type stains consist of dyes that are dissolved in methanol. The dye is completely dissolved in the methanol, so it does not contribute to the solids build on the furniture. No-wipe stains are pigmented stains that are sprayed on and not wiped that contain a small amount of oil, pigment, and solvent. No-wipe stains are used to accent the wood grain, provide color uniformity, and provide for color retention.

Toner is a type of stain that evens out the color of the initial application of stain. Toners contain higher solids than initial stains. Toners contain nitrocellulose or vinyl binders, dissolved in solvent. Toners are not wiped, and are often pigmented.

2. Washcoat.[15-25] Low-solids (usually 2 to 13 percent by volume) finishing material used to assist in filling or color uniformity, to aid in adhesion, and partially seal the wood from subsequent staining operations. Washcoat also prepares the wood surface for sanding after stain application. Some facilities buy sealer in bulk, and dilute their sealer to make washcoat. There are three main types of washcoat materials: standard nitrocellulose, vinyl or modified vinyl types, and vinyl-

modified/conversion types. Advantages of nitrocellulose washcoats include quick drying, easy sanding, and clarity. Vinyl and vinyl-modified washcoats consist of nitrocellulose and vinyl and provide better toughness and adhesion than pure nitrocellulose washcoats; however, some clarity is sacrificed. The "conversion" or precatalyzed-type washcoats also provide good adhesion and toughness, and are good for open pore woods. Because they react in place, they are impervious to solvents contained in subsequently applied sealers and topcoats.

3. Glaze/filler.[15-25] Usually highly-pigmented wiping stains that contain oil and are used in finishing furniture where open pore woods such as oak and mahogany are used. Sometimes, relatively closed-pore woods such as cherry are also filled. Glazes and fillers are usually supplied as heavily pigmented, high-solids, low-VOC materials, which are reduced on the job. As supplied, the solids contents of glazes and fillers are in the 75 percent solids by volume range. Once reduced, the solids contents usually range from 10 to 45 percent by volume. Glazes and fillers are usually spray applied, then wiped into the wood.

4. Sealer.[15-25] Usually a nitrocellulose-based lacquer. Vinyl or vinyl-modified sealers and catalyzed sealers (including acid-cured alkyd amino vinyl sealers) are also available, and provide advantages similar to those of their washcoat counterparts. Primary purposes of sealers are to provide adhesion, enable sanding, to increase build, and to seal the wood and establish a foundation for artistic enhancement. Solids contents typically range from 10 to 30 percent by volume.

5. Highlight.[15-25] Color coat that is applied sparingly to accent and give character to the wood. Includes shading and padding stains as well as spatter. Highlight is usually manually applied using brushes, sponges, or rags. Distressing of furniture to obtain a desired finish could also be done at this point in the finishing sequence. Solids contents vary from less than 1 to 49 percent solids by volume. Generally low solids contents (less than five percent by volume).

6. Topcoat.[15-25] A clear coat whose function is to protect the color coats, enhance the beauty of the furniture, and provide a durable final finish. Typical solids contents range from 13 to 30 percent solids by volume. There are four categories of topcoats: standard nitrocellulose topcoats, acrylic topcoats, catalyzed topcoats, and conversion varnishes. The advantages of nitrocellulose lacquers are that they provide the best clarity, pick up little dirt, dry quickly, and are easy to wipe off and repair. Acrylic lacquers are used over white or pastel finishes as protection from common household products. They can also be applied over nitrocellulose topcoats for color retention. The clarity of acrylic lacquers is not as good as the nitrocellulose lacquers.

Catalyzed topcoats, like catalyzed sealers, are available in one- and two-pack form. The one-pack coatings are precatalyzed and contain nitrocellulose resins and a smaller percentage of urea resin. Because only a small amount of catalyst is added, it can take up to 3 to 4 weeks after application until the coating is completely cured, although it dries to the touch much sooner. The shelf life of precatalyzed coatings is more than 6 months.

The two-pack coatings consist of two packs, one contains urea or melamine-based resins, and the other contains the catalyst. The two components must be mixed before use. More catalyst is added to two-pack catalyzed coatings, so cure time is short (on the order of minutes or hours). Two-pack catalyzed coatings have a limited "pot life" after mixing (from 1 day to more than a week).

Conversion varnishes do not dry as quickly as nitrocellulose topcoats, and are difficult to spot repair, with washoff also being difficult or impossible. Acid-cured alkyd amino conversion varnishes are used extensively in the wood furniture industry. Conversion varnishes, like 2-pack coatings, have a limited pot life.

2.2.3 Finishing Sequences

The finishing sequence for wood furniture finishing operations includes various finish application steps, as well as intermediate sanding, rubbing, and polishing and drying steps. Drying of the furniture piece is performed between finishing steps by flashoff (ambient drying with or without forced air) and/or oven drying. Finishing sequences vary considerably from plant to plant, with some manufacturers using more or less steps than other manufacturers. The finishing sequence varies based on a number of factors, including the piece that is being finished, the desired finish quality, and the finish application method. The finishing sequences provided are intended to be representative of operations in the wood furniture industry. This section discusses three typical finishing sequences: short spray finishing sequence; long spray finishing sequence; and roll, curtain, and dip finishing sequence. A summary of the various finishing sequences is presented in Table 2-6.

TABLE 2-6. TYPICAL FINISHING SEQUENCES[4]

Short spray finishing	Long spray finishing	Roll, curtain and dip finishing
Sap/equalizing stain	Sap/equalizing stain	Stain
Air dry	Air dry	Air dry
Prestain toner/penetrating stain	Prestain toner/penetrating stain	Sealer
Air dry	Air dry	Air dry
Sealer	Washcoat	Oven
Air dry	Air dry	Sand
Oven	Sand	Topcoat
Sand	Glaze/filler	Air dry
Topcoat	Wipe	Oven
Air dry	Air dry	
Oven	Oven	
	Sealer	
	Air dry	
	Oven	
	Sand	
	Highlight	
	Air dry	
	Topcoat	
	Air dry	
	Oven	

A wide range of wood furniture products may be finished using the same finishing sequences; for this reason, multiple

segments of the industry may have the same finishing sequence. In addition, the same type of furniture may be finished using different types of finishing sequences. For example, some residential furniture, SIC code 2511, may be finished using the short spray finishing sequence and some may be finished using a long spray finishing sequence.

2.2.3.1 Short Spray Finishing Sequence.[4] As seen in Table 2-6, a typical finishing sequence for short spray finishing involves spray application of stain, (e.g., equalizing stain followed by a toner) sealer, and topcoat. Wood furniture facilities that finish products by short spray finishing sequences occur in nearly all of the industry's SIC codes, as seen in Table 2-7.

TABLE 2-7. WOOD FURNITURE INDUSTRY STRUCTURE BY FINISHING SEQUENCE[4]

Finishing sequence	SIC codes
Short spray finishing sequence	2434 - Kitchen Cabinets 2511 - Residential Furniture 2512 - Upholstered 2519 - Furniture, n.e.c. 2521 - Office Furniture 2531 - Public Building Furniture 2541 - Store Fixtures 2599 - Furniture and Fixtures, n.e.c.
Long spray finishing sequence	2511 - Residential Furniture 2517 - Radio, Television Cabinets 2519 - Furniture, n.e.c. 2521 - Office Furniture 2531 - Public Building Furniture
Roll finishing sequence	2434 - Kitchen Cabinets 2517 - Radio, Television Cabinets 2521 - Office Furniture 2531 - Public Building Furniture 2541 - Store Fixtures 2599 - Furniture and Fixtures, n.e.c.

2.2.3.2 Long Spray Finishing Sequence.[4] A representative long spray finishing sequence consists of spray application of multiple stains, followed by washcoat, glaze/filler, sealer, highlight, and topcoat. Facilities that finish furniture with a long spray finishing sequence can be in market segments represented by the five SIC codes seen in Table 2-7.

2.2.3.3 Roll, Curtain, Dip Finishing Sequence.[4] Use of the roll, curtain, and dip finishing sequence also occurs in six SIC code industries, as listed in Table 2-7. A typical finishing sequence for roll, curtain, and dip finishing includes application of stain, sealer, and topcoat.

2.3 EMISSION SOURCES

2.3.1 Industry Source Definition

The CTG for wood furniture finishing and cleaning operations will apply to the nine SIC codes for the wood furniture industry that were identified in Table 2-1.[1-3] In addition to these nine SIC codes that were included in the CTG analysis, a State may, in developing their own rule, include other processes that they believe are best described as a wood furniture finishing operation.

Three of the applicable SIC codes, 2519, 2531, and 2599, involve operations associated with nonwood products. The SIC Code 2519 includes household furniture not classified elsewhere; SIC Code 2531 includes public building and related furniture; SIC Code 2599 includes furniture and fixtures not elsewhere classified. It is important to note that the CTG only covers the wood furniture finishing operations associated with those SIC codes. For example, SIC code 2531 includes facilities manufacturing seats for automobiles and buses. These facilities will not be covered by the CTG. The CTG for wood finishing operations does apply to finishing rattan and wicker. The VOC emissions from a wood furniture manufacturing facility resulting from operations other than finishing, cleaning, and washoff are not covered by the CTG for wood furniture coating. For example, if a wood furniture manufacturing facility is involved in gluing operations, the CTG would not apply to VOC emissions from the gluing operations.

2.3.2 Emission Sources

The following discussions apply to the majority of finishing operations, in which separate areas such as spray booths and ovens have separate ventilation. There are many potential VOC emission sources in a wood furniture manufacturing facility.

However, four primary VOC emission sources are associated with wood furniture finishing operations. These sources include spray booths, flashoff areas, ovens, cleaning operations, and washoff operations. An additional, although comparatively minor, source of VOC emissions is the actual finished product. These sources are further discussed below.

1. Spray booths. In the wood furniture industry, finishing materials are usually applied in booths; various types of spray application equipment are used for spray finishing techniques and various types of roller, curtain, and dip coating application equipment are used for flatline finishing techniques. (Booths for both spray finishing techniques and flatline finishing techniques will be generally referred to as "spray booths" in this discussion.) The booths are commonly maintained at ambient conditions. The spray booth type, size, exhaust flowrate, and particulate control methods may vary widely within the wood furniture industry. The types of booths that are used in the wood furniture industry include manual and automatic spray booths. The average size booth within the industry is 2.5 meters (m) high, 5.2 m wide, and 3.0 m deep (8.1 feet [ft] high, 17 ft wide, and 9.9 ft deep). The spray booth exhaust rates range from 42.5 cubic meters per minute (m^3/min) to 2,160 m^3/min (1,500 standard cubic feet per minute [scfm] to 76,300 scfm); the average exhaust rate is 527 m^3/min (18,600 scfm). Table 2-8 shows the average spray booth characteristics for the overall industry and for various segments of the industry. Particulate control of overspray is commonly achieved with either dry filters or water curtains.

The majority of spray booths are operated using manual finishing techniques; approximately 84 percent are operated by manually finishing products and 16 percent apply finishes with automatic finishing methods.[9] Automatic spray booths are often smaller in size than manual spray booths, and exhaust rates from automatic spray booths are significantly lower than those from manual booths. Average dimensions for manual finishing booths are 2.4 m by 5.8 m by 3.0 m (8.0 ft by 19 ft by 9.9 ft), compared

TABLE 2-8. SPRAY BOOTH CHARACTERISTICS[9]

Industry Segment	Average dimensions, m (ft)	Average exhaust, m^3/min (scfm)
Manual booths	2.4x5.8x3.0 (8.0x19x9.9)	609 (21,500)
Automatic booths	3.0x2.6x3.7 (10x8.5x12)	66.3 (2,340)
Short spray finishing	2.5x5.8x3.0 (8.3x19x10)	583 (20,600)
Long spray finishing	2.3x4.6x2.8 (7.7x15x9.2)	629 (22,200)
Roll, curtain, dip finishing	1.5x3.4x1.9 (5.0x11x6.2)	453 (16,000)
Overall industry	2.5x5.2x3.0 (8.1x17x9.9)	527 (18,600)

with 3.0 m by 2.6 m by 3.7 m (10 ft by 8.5 ft by 12 ft) for booths with automatic spraying operations. The average booth exhaust from manual finishing operations is 609 m^3/min (21,500 scfm) and the average exhaust from booths with automatic finishing operations is 66.3 m^3/min (2,340 scfm).[9]

Booth dimensions for short spray finishing and long spray finishing sequences are similar, as shown in Table 2-8. The average dimensions of booths used for the roll, curtain, and dip finishing sequence are smaller than those used for short and long spraying. The exhaust for the short spraying sequence is 583 m^3/min (20,600 scfm) and for the long spraying sequence is 629 m^3/min (22,200 scfm). The exhaust flowrate for the roll, curtain, and dip finishing sequence is 453 m^3/min (16,000 scfm), somewhat lower than for short and long spraying sequences.[9]

Spray booth characteristics may depend on whether the components are finished and then assembled or are assembled then finished. The spray booths used to finish furniture products that are first assembled and then finished are mostly open, i.e., all sides are open except the backside. The booth design is open to accommodate entrance and exit of larger pieces. In segments of the industry where manufacturers finish components before assembly, the booths are generally fully enclosed except for slots in the sides of the booth. The unassembled pieces are much smaller than assembled components, so the pieces can enter and exit the booths on conveyors through these slots.

Many spray booths are equipped with dry filters, typically a paper material, to control particulates. In the past, water curtains had been used to control particulates. However, since the spent water had to be disposed as a hazardous waste, hazardous waste disposal costs had to be considered. As these costs increased, the cost effectiveness of water curtain filtration decreased. Therefore, most new and modified spray booths in the wood furniture industry that use filters are equipped with dry filters. However, some water-wash spray booths are still in use.

2. Flashoff areas. Flashoff areas, where solvent is allowed to volatilize from the finished piece, are located either between spray booths or between a spray booth and an oven. These areas are used to allow solvent evaporation and partial curing prior to final cure in the oven or, in some instances, are used in lieu of an oven. Some flashoff areas have forced air circulation and are referred to as forced-flashoff areas. Most flashoff areas do not have a separate exhaust. A portion of the emissions from a flashoff area located in between a booth and an oven will be exhausted through the booth and oven; the amount exhausted through the booth and oven depends on the total length of the flashoff area. The length of flashoff areas varies significantly by facility, and even within a facility. A flashoff area that is not followed by an oven is often longer than one that is located in between a booth and an oven.

3. Ovens. Ovens are used between some finishing steps to cure the finish prior to the next step in the finishing sequence. Many types of ovens are used in the wood furniture industry. Most are steam heated using either a wood- or coal-fired boiler; others are gas-fired. Turbulators and high velocity ovens are frequently used. Infrared (IR) or ultraviolet (UV) ovens are also used, but their use in the wood furniture industry is limited at this time. The parameters for the ovens can also vary considerably. Oven temperatures can range from less than 32.2° to 191°C (90.0° to 375°F) depending on the type of finishing material used, the piece being finished, and the oven residence

time; the average temperature for ovens is 58.9°C (138°F). Residence time ranges from 1 to 60 min, with an average of 13 min. The exhaust rate from ovens also varies and can range between 21.2 and 552 m^3/min (750 and 19,500 ft^3/min). The average exhaust rate from ovens in the wood furniture industry is 133 m^3/min (4,690 scfm).[9]

4. Cleaning, dilution, and washoff operations.[26] As discussed previously, solventborne nitrocellulose lacquers are the predominant type of finishing materials used by the wood furniture industry today. The resins in such finishes are relatively "difficult" to dissolve, so a high-solvency-rated solvent must be used in their formulation. Similarly, thinning of these finishing materials requires the use of the same solvent or one with equivalent solvency. This solvent is generically referred to as "lacquer thinner." The current standard practice is to use lacquer thinner for both incidental thinning of premixed finishes and for cleaning and washoff. Advantages of the lacquer thinner include its compatibility with the finishing materials and the ease with which it removes cured nitrocellulose lacquers.

In wood-finishing operations, industrial solvents are used predominantly for cleaning application equipment. In addition to application equipment cleaning, cleaning solvent can also be used to clean out piping, clean booths and rails, strip cured finishes from wood parts or machinery, and periodically clean centralized finishing material storage and distribution (pump room) equipment. They are also used to strip finishes from finished pieces that do not meet specifications. This process is called washoff, and it represents a significant portion of cleaning solvent usage by the industry. Although a major use of cleaning solvents in some finishing industries, surface preparation does not require solvents in the case of wood furniture finishing.

Application equipment must be cleaned every time there is a color change, every time there is a change in finishing material type (for smaller operations with limited equipment and few booths), and usually before the equipment is to be idled for a

period of time (e.g., at the end of the day). For spray finish application, equipment cleaned with solvents includes spray guns, feed lines, and finish reservoirs (where applicable). In the case of roll, curtain, and dip coating operations, the rollers, spray bar nozzles, and finish material containers must be cleaned periodically to maintain application quality as well as to change colors.

Spray guns have traditionally been cleaned by sending pure or reused solvent through the gun and atomizing the solvent into the booth ventilation system. Recognizing that this results in excessive emissions of solvent, some operators cut off the atomizing air to the spray gun and pump the cleaning solvent through the gun into a container. This procedure can be followed provided the gun is the type that does not depend on the flow of the atomizing air to pump the finish (or cleaning solvent) through the mechanism. Alternately, the cleaning procedure may involve soaking the entire gun in solvent in a wash tank or bucket. This guards against the possibility that small amounts of finishing material inadvertently missed during the cleaning will cure and clog the small orifices of the gun. Cleaning solvent is often reused within a facility and eventually recycled in-house or sent out for recycling/disposal.

Generally, spray booth cleaning does not require significant amounts of solvent. Usually, a strippable coating is applied to the spray booth walls so that when solids buildup reaches a certain limit, the strippable coating together with the solids can be removed, minimizing the need for solvents.[27] Similarly, the spray booth exhaust filters are disposed of as solid waste when they become clogged with coating solids. The use of cleaning solvents for removal of finish overspray and drips is a minor use.

In regard to the use of industrial solvents for finishing material dilution, the majority of facilities do not dilute finishing materials in-house; finishes are ready to use as purchased. However, in some instances, finishes are diluted to decrease their viscosity and improve their sprayability and

performance. Various factors are considered in determining how much dilution is required, i.e., the dilution ratio. In some instances, the dilution ratio remains constant, regardless of conditions, while in other instances, the extent of dilution is dependent on seasonal conditions such as temperature and humidity and may also vary according to the material being diluted. For example, a facility may dilute sealers but not topcoat. The VOC contents of finishes presented in Chapter 4.0 represent finishing materials as they are applied; any dilution has been taken into account.

5. Final Wood Product. In addition to the above major emission sources for wood furniture finishing operations, the finished dried furniture may be a minor emission source. The finished piece may have small quantities of solvent that eventually volatilize. However, the amount of VOC emissions from this source are expected to be very minor, most likely representing less than 1 percent of the total VOC emissions.[28]

2.3.3 VOC Emission Summary

The annual consumption of solvents by paint and coating industries has been estimated by SRI International for the National Paint and Coatings Association, Inc. (NPCA).[29] A summary of the estimated solvent consumption for the various paint and coating industries is provided in Table 2-9. Because the solvents used in wood furniture finishing operations do not typically react with or become part of the finished product, the assumption has been made that solvent consumption is approximately equal to solvent emissions. Furthermore, because the majority of the solvents consumed by the wood furniture industry are considered VOC's, solvent usage is approximately equal to VOC emissions. While this assumption provides a reasonable estimate of overall industry VOC emissions, it is still important to note that there are some coatings used by the wood furniture industry which form VOC's as reaction by-products from a curing process that involves a chemical reaction (as opposed to only by solvent evaporation). In addition, there are some coatings in which not all of the VOC's contained in the

TABLE 2-9. SOLVENT CONSUMPTION IN PAINTS AND COATINGS ORIGINAL EQUIPMENT MANUFACTURERS (OEM), 1989 (Million of pounds)[29]

Market	Solvent consumption[a]
Original Equipment Manufacturers (OEM)	
Wood furniture and fixtures	270
Wood flat stock	6
Metal furniture and fixtures	85
Containers and closures	191
Sheet, strip, and coil	71
Major appliances	41
Other appliances	23
Automotive	131
Trucks and buses	33
Railroad	7
Other transportation	13
Machinery and equipment	159
Electrical, insulation	59
Paper, foil, and film	40
Other products finishes	256
OEM total	1,398
Architectural total	614
Special purpose total	659
Thinner and miscellaneous total	1,682
PAINT and COATINGS TOTAL	4,349

[a]Of the 256 million pounds of solvent consumed by the Other Product Finishes market, 250 million pounds are considered VOC's. Similarly, of the 659 million pounds consumed by the Special Purpose market, 638 million pounds are considered VOC's, and of the 1,682 million pounds consumed in Thinner and Miscellaneous coatings, 1,659 million pounds are considered VOC's.

coating evaporates; some of the VOC's may chemically react to form the dry film. Both polyester and some ultraviolet (UV) coatings used by the wood furniture industry contain styrene monomer, which reacts to form the coating. Some of the styrene is emitted during the application and curing of the coating. As indicated in this table, the wood furniture and fixture industry consumes more solvent than any other industry listed. Other industries that consume large amounts of solvent include the containers and closures, automotive, and machinery and equipment industries.

The breakdown of solvent usage by the wood furniture industry is provided in Table 2-10. As indicated in this table, the most frequently used solvent is toluene, followed by xylenes, alcohols, ketones, and acetates.[29]

TABLE 2-10. WOOD FURNITURE INDUSTRY SOLVENT USAGE--1989[29]
(Millions of pounds)

Solvent	Wood furniture
Aliphatic hydrocarbons	8.6
Toluene	71.5
Xylenes	40.4
Other aromatics	9.2
Butyl alcohol	27.5
Ethyl alcohol	27.7
Isopropyl alcohol	15.4
Other alcohols	2.0
Acetone	3.0
Methyl ethyl ketone	15.0
Methyl isobutyl ketone	19.8
Ethyl acetate	7.8
Butyl acetates	14.3
Other ketones and esters	2.8
Glycol ethers and ether esters	4.7
TOTAL	270

2.4 EXISTING REGULATIONS

2.4.1 Introduction

The review of existing VOC regulations for wood furniture finishing is helpful in defining potential control strategies and

their effectiveness. The bulk of the research into existing wood furniture regulations was done in 1990, and revisions were made baaed on the latest available revised versions of the regulations, as of January 1995. This list of regulations should not be considered an exhaustive list of all State and local wood furniture regulations. Nine areas identified as having existing regulations (as of January 1994) are Illinois, Indiana, Massachusetts, New Jersey, the New York City Metropolitan area, Pennsylvania, and California's Bay Area, South Coast, and San Diego County Air Pollution Control Districts. Each regulation applies to furnishings made of solid wood, wood composition, wood material, and/or simulated wood material. The Massachusetts, New York City, San Diego, Bay Area, and South Coast regulations also apply to the coating of wood products. Exemptions include musical instruments, refinishing, replacement, and custom furniture operations for the Bay Area regulation, flat wood panels for the Massachusetts regulation, and classic guitars until January 1, 1996, and refinishing, replacement, and custom furniture operations until July 1, 1996 for the South Coast regulation. The regulations use various strategies to limit VOC emissions from wood furniture finishing operations. These strategies include requiring the use of certain application methods, such as airless, air-assisted airless, HVLP, and electrostatic spraying, as well as roller coating, dipping, and brushing. Other regulations require the use of lower-VOC content or nonphotochemically reactive finish materials or the use of add-on controls such as incinerators and carbon adsorbers. Some of the regulations allow combinations of the above strategies to achieve compliance.

2.4.2 Summary of Existing Regulations[30-41]

The key features of the nine existing wood furniture finishing regulations are summarized in Table 2-11. The regulations generally apply to both existing and new facilities.

All of the nine regulations contain applicability criteria in terms of finishing material use or VOC emission cutoffs. The applicability criteria used in the San Diego, New Jersey, Bay

TABLE 2-11. REGULATORY SUMMARY--WOOD FURNITURE COATING[30-40]

State	San Diego County, California	Illinois	New Jersey	Indiana	Pennsylvania	Bay Area, California	South Coast District, California	New York City Metropolitan Area	Massachusetts
Regulation No.	Rule 67.11	Subpart F Sections 215.204-215.213; 218.204-218.211	7:27-16.7	IAC 326 8-2-12	129.52	Regulation 8, Rule 32	Rule 1136 Rule 108 Rule 1171	Title 6, Part 228	310 CMR 7.18(23)
Existing sources	Yes	Yes	Yes	Yes, existing as of 7/1/90	Yes	Yes	Yes	Yes	Yes
New sources	Yes	Yes	Yes	Yes	No[a]	Yes	Yes	Yes	Yes
Applicability cutoff	500 gal/yr of coating use	25 tons/yr potential emissions	0.5 gal/h and 2.5 gal/d of solvent use potential. All new sources--15 lb/d actual	Existing and new sources in nonattainment areas--100 ton/yr emissions	3 lb/hr, 15 lb/d, or 2.7 tons/yr	20 gal/yr of coating use	1 gal/d of coating use	Varies with location	$\geq$50 tons VOC/yr potential
Application method requirements	Yes	Yes	Yes, new sources, $\geq$65% T/E every line $\geq$60% T/E or use water-borne. Existing sources with emissions >50 tons/yr, average T/E $\geq$65%; <50 tons/yr, T/E $\geq$40%	Yes	Yes	Yes	Yes, $\geq$65% T/E	None	Yes, $\geq$65% T/E
VOC content limitations	Yes	Yes	Yes	No	Yes	Yes	Yes	Yes	Yes
Cleanup requirements	Equipment cleanup; no VOC content unless no evaporation or total enclosure used, or VOC content must be <200 grams/liter	No	No	No	No	Surface prep and cleanup: closed containers, equipment cleanup: no VOC content unless collection used and evap. minimized.	Subject to Rule 1171--Solvent Cleaning Operations	After January 1, 1994. Surface prep and cleanup: closed containers, equipment cleanup: no VOC content unless collection used and evap. minimized.	No

TABLE 2-11. (continued)

State	San Diego County, California	Illinois	New Jersey	Indiana	Pennsylvania	Bay Area, California	South Coast District, California	New York City Metropolitan Area	Massachusetts
Repair coat exemption	No	Must have T/E ≥30%, 10 gal/d exemption	No	10 gal/d	Air atomized	No	Aerosol-spray coatings are exempted; touchup and repair coatings exempt until 7/1/96	No	Exemption for coatings used in small amounts-55 gal/yr
Allowable application methods		b	c					Not specified	b
Air atomized	No	No	No	No	Yes, for <5% by volume of total coatings	No	No		Not specified
Airless	No	Yes	Yes	Yes	Yes	Yes	Yes, with 1996 compliance coatings (until 7/1/94)		Not specified
Air assisted airless	No	Yes	Yes	Yes	Yes	Yes	Yes, with 1996 compliance coatings (until 7/1/94)		Not specified
Roller	Yes	Yes	Yes	Yes	Yes	Yes	Yes		Not specified
Brush	Yes	Yes	Yes	Yes	Yes	Yes	Yes		Not specified
Wipe	Yes	Yes	Yes	Yes	Not specified	Yes	Yes		Not specified
Dip	Yes	Yes	Yes	Yes	Yes	Yes	Yes		Not specified
Electrostatic spraying									
Air	Yes	Yes	Yes	Yes	Yes	Yes	Yes		Not specified
Disk	Yes	Yes	Yes	Yes	Yes	Yes	Yes		Not specified
High volume low pressure (HVLP)	Yes (0.1-10 psig)	Yes	Not specified	Not specified	Yes	Yes (.1-10 psig)	Yes (0.1-10 psig)		Not specified

TABLE 2-11. (continued)

State	San Diego County, California	Illinois	New Jersey	Indiana	Pennsylvania	Bay Area, California	South Coast District, California	New York City Metropolitan Area	Massachusetts
Alternate compliance methods. Baseline for equivalency calculations	65% T/E and compliance coatings	65% T/E, compliance coatings (30% T/E for repair coat)	40 or 65% T/E (small vs. large), compliance coatings	Specified application methods	None		No credit for improved T/E. Minimum 20% VOC emission reduction required	Specified coating VOC contents	Daily weighted averaging for each coating line
Incineration	Yes, 90% capture efficiency, 95% destruction efficiency	Yes, 90% capture efficiency, 81% overall control	Yes, 90% capture efficiency	Yes		Yes, minimum of 85% control	Yes	Yes, 90% capture efficiency, 80% overall control	
Carbon adsorption	Yes, 90% capture, 95% destruction	Yes	Yes, 90% capture efficiency	Yes		Yes, minimum of 85% control	Yes	Yes	
Lower-VOC coatings	Yes	Yes	Yes			Yes		Yes	
Comply through use of nonphoto-chemically reactive coatings	No	No	No	Yes		No	No	No	

[a]New sources are not explicitly subject to the regulation. In the Pennsylvania regulation, new sources with emissions >25 tons/yr are subject to best available technology, which is at least as stringent as the regulation.

[b]Application methods are not specified in the Illinois and Massachusetts regulations, but a minimum T/E of 65 percent is required. In the Illinois regulation, allowable application methods are specified in Table 1 of the regulation based on common minimum T/E assumptions.

[c]All new surface coating operations must use waterborne coatings unless the application system on every line applying solvent-based coatings has a T/E ≥60 percent. Existing wood furniture coating operations must meet average (overall all sources in the facility) T/E requirements. Existing small sources (<50 tons/yr VOC) must obtain an average T/E ≥40 percent using airless, air assisted airless or heated airless spraying. Existing large sources (>50 tons/yr VOC) must obtain an average T/E ≥65 percent using electrostatic spray techniques or flat line processes in addition to the aforementioned techniques.

Area, and South Coast regulations is in terms of amount of finishing material used on a per hour, per day, or per year basis. Potential and/or actual VOC emissions resulting from wood furniture finishing operations are used to determine applicability in the Illinois, Indiana, Massachusetts, New York, and Pennsylvania regulations. It is difficult to compare the applicability criteria of the regulations since the bases vary. Converting finishing material use to emissions, or vice versa, would require several assumptions regarding VOC content of finishes, operating hours, etc.

All of the regulations, except New York City's, contain restrictions concerning allowable finish application method requirements. The regulations generally specify application methods that are believed to achieve greater transfer efficiencies than air or airless spray. If an application method has a higher transfer efficiency, less finishing material will be needed and thus, VOC emissions will be lower. Initially, some of the regulations provided transfer efficiencies for a variety of application methods. However, because the transfer efficiency of an application method can vary based on many factors, including the size and shape of the piece being coated, and because there is no EPA-accepted method of measuring transfer efficiency, the lists of transfer efficiencies were removed from most of the regulations.

Of the areas addressing specific application methods, airless and air-assisted airless spraying are allowed under all but San Diego's regulation, provided certain criteria are met. Electrostatic spraying is allowed under all the regulations. Roller coating, brushing, wiping, and dipping are acceptable under all the regulations. (Pennsylvania's regulation does not specify wiping.) High-volume low-pressure spraying is specified as an allowable method under all of the California areas' regulations, in Illinois' regulation, and in Pennsylvania's regulation. It was not specified as an allowable method under the other area regulations because in the past it has not been used widely in wood furniture coating operations. The

Massachusetts regulation does not indicate specific allowable coating application methods that may be used.

Repair coating operations are allowed less-stringent application method and transfer efficiency (T/E) requirements under Illinois', Indiana's, and Pennsylvania's regulations. An exemption for coatings used in small amounts is contained in the Illinois, Indiana, and Massachusetts regulations. The San Diego, Bay Area, and South Coast regulations also contain cleanup operation restrictions to limit VOC emissions.

Alternative compliance methods are allowed under all the regulations except Pennsylvania's. Each alternative compliance program works differently and can be quite complex. Under the alternative compliance plans, add-on controls can be used, in conjunction with or instead of required application methods and coatings.

The baseline level to be used for calculating equivalent emissions for alternative compliance plans varies for the regulations. Under the Illinois regulation, the emissions resulting from the use of an application method with a transfer efficiency of 65 percent for all operations (except repair coats, which require a 30 percent transfer efficiency), and the use of complying coatings throughout the facility, represent baseline emissions. Massachusetts' and San Diego's baselines are the same as Illinois' except that there is no repair coat exemption. New Jersey's baseline definition is similar to those for San Diego and Illinois. Baseline under Indiana's regulation is represented by use of required application methods for all coating operations. Baseline emissions under the Bay Area regulation are those that result from the use of airless spraying for all coating operations, assuming that compliant coatings are used. The South Coast regulation defines baseline emissions as those resulting from the use of compliant coatings (required as of January 1, 1989) for all coating operations, applied at a transfer efficiency of 65 percent. South Coast's regulation, however, does not allow credit for any emission reductions resulting from the use of an application method with a transfer

efficiency greater than 65 percent. This emissions reduction credit was excluded because transfer efficiency is difficult to measure and thus, resulting emissions reductions would be difficult to quantify. Baseline emissions for New York City are those that would result from the use of coatings with VOC contents specified in the regulation.

Table 2-12 presents the VOC content,limitations associated with the eight regulations that contain such restrictions. San Diego, Bay Area, and South Coast all have a phased approach. Under the San Diego regulation, one set of VOC-content limits applied through January 1, 1995, when more stringent limits became effective. There are four different phases to Bay Area's regulation and three phases to South Coast's regulations.

TABLE 2-12. VOC CONTENT LIMITATIONS--WOOD FURNITURE FINISHING[30-40]

State	San Diego County, California	Illinois	New Jersey[a]	Indiana	Pennsylvania	Bay Area District, California				South Coast District, California			New York City Metropolitan Area	Massachusetts
						On and after 8/1/91	On and after 7/1/92	On and after 7/1/94	On and after 7/1/96	On and after 7/1/90	On and after 9/1/95	On and after 7/1/96		
VOC content limitations, lb/gal	As applied, less water and exempt compounds	As applied, less water and exempt compounds	Minus water	VOC limitations are not contained in regulation	Minus water	As applied, less water[b]				--Less water and exempt compounds--			As applied, less water and excluded VOC	As applied, lb VOC/gal solids
Clear topcoat	4.6 (2.3)[c]	5.6	5.6		5.9	5.8 (5.8)	4.6 (5.8)	2.3 (3.5)	2.3 (3.5)	4.6 (5.7)[e]	2.3	2.3	5.6	23.4
Washcoat	4.0 (4.0)[c d]	6.1	6.1		6 5	6.7 (6.7)	4.0 (6.7)	4.0 (4.0)	1.0 (1.0)	4.0[d]	4.0[d]	1.0[d]	6.1	35.6
Repair coat		5.6			6.0									
Semitransparent wiping and glazing stains					6.4	6.7	6.7	4.0	1.0	4.0	4.0	1.0	6.8	89.4
Semitransparent spray stains and toners	4.0 (4.0)[c d]	6.6	6.8		6.8	6.7 (6.7)	4.0 (6.7)	4.0 (4.0)	1.0 (1.0)	4.0[d] (6.7)[e]	4.0[d]	1.0[d]	6.8	
Opaque ground coats and enamels					5.5									
Pigmented coatings	5.0 (2.3)[c]	5.0	5.0			5.0 (5.0)	5.0 (5.0)	2.3 (3 5)	2.3 (3.5)	5.0	2.3	2.3	5.0	15.6
Clear sealers	4.6 (4.6)[c]	5.6	5.6		6.2	5.8 (5.8)	4.6 (5.8)	4.6 (3.5)	2.3 (3.5)	4.6 (5.7)[e]	2.0	2.0	5.6	23.4
Filler						4.2 (4.2)	4.2 (4.2)	4.2 (4.2)	2.3 (2.3)	4.2	4.2	2.3		
High solids stains														
Nonglaze	5.8 (5.8)[c]									5.8	5.8	2.0		
Glaze	5.8 (5.8)[c]													
Inks										4.2	4.2	4.2		
Stripper	2.9 (2.9)[c]										<2.9 lb/gal			
Cleaning surface preparation	1.7 (1.7)[c]										0.58	0.58		
Opaque stain		4.7	4.7			5.8 (5.8)	5.8 (5.8)	5.8 (5.8)	2.0 (3.5)		4.8		4.7	13.0
Mold-seal coating										6.3	6.3	6.3		
Multicolored coating	5.7 (2.3)[c]									5.7	5.7	2.3		
Other coatings	3.5 (2.3)[c]				7.0									

[a]New sources must use waterborne coatings unless the application system on every coating line applying solvent-based coatings has a T/E $\geq$ 60 percent. The limits presented in the table apply to existing facilities and to new facilities (as a minimum requirement).

[b]Limits are expressed as grams of VOC per liter of coating applied (minus water) except for semi-transparent stains and washcoat, which are expressed as grams of VOC per grams of coating applied (including water). First number applies to general wood products (SIC Major Group 24). Number in parentheses applies to furniture (SIC Major Group 25).

[c]Limits as of December 31, 1990 (limits to become effective January 1, 1995).

[d]Limits are lb/gal, without the water and exempt solvent exemption, since minimal solids content.

[e]First number is with exempt compounds, number in parentheses is without exempt compounds.

2.5 REFERENCES FOR CHAPTER 2

1. U.S. Department of Commerce, Bureau of the Census, 1987 Census of Manufacturers, Industry Series MC87-I-24B, January 1990.

2. U.S. Department of Commerce, Bureau of the Census, 1987 Census of Manufacturers, Industry Series MC87-I-25A, March 1990.

3. U.S. Department of Commerce, Bureau of the Census, 1987 Census of Manufacturers, Industry Series MC87-I-25B, April 1990.

4. ENSR Consulting and Engineering. An Evaluation of VOC Emissions Control Technologies for the Wood Furniture and Cabinet Industries. Sponsored by American Furniture Manufacturers Association, Business and Institutional Furniture Manufacturers Association, Kitchen Cabinet Manufacturers Association, and National Paint and Coatings Association. January 1992.

5. Chazin, M., editor. The FDM 300. Furniture Design and Manufacturing. February 1990. pp. 20-158.

6. Telecon. Caldwell, M.J. Midwest Research Institute, with Titus, R., Kitchen Cabinet Manufacturers Association. June 18, 1990. Discussion of the cabinet industry.

7. Telecon. Smith, L., Midwest Research Institute, with Taylor, R., American Woodmark Corporation. June 18, 1990. Discussion of American Woodmark's facilities.

8. Telecon. Caldwell, M.J., Midwest Research Institute, with Runyan, L., American Furniture Manufacturers Association. November 29, 1990. Discussion of furniture market.

9. Memorandum. Rasor, S., MRI, to Strum, M., EPA/ESD/CPB. Summary of Responses to the Information Collection Request for the Wood Furniture Industry. January 28, 1994.

10. Survey response and attachments from Can-Am Engineered Products, Inc., to Caldwell, M., Midwest Research Institute. March 15, 1990. Response to information request.

11. The DeVilbiss Company. HVLP: High-Volume Low-Pressure. Brochure. Toledo, OH. Publication No. F-817-A. 1989, 14 pp.

12. Contact Report. Caldwell, M. J., Midwest Research Institute, with Kish, S., Graco, Inc. August 12, 1991. Discussion of spray systems and their use with waterborne coatings.

13. Riberi, B., "UV-curable Unsaturated Polyester Systems for the Industrial Finishing of Furniture." Paint & Coatings Industry, Vol. 6, No. 7, October 1990.

14. Telecon, Caldwell, M.J., Midwest Research Institute, with Riberi, B., Mobay Corporation. August 27, 1990. Clarification of information provided on Section 114 information request response.

15. Survey response from PPG Industries, Inc., to Farmer, J., EPA/ESD. May 8, 1990. Response to Section 114 information request.

16. Survey response and attachments from Reliance Universal, Inc., Division of Akzo Coatings, to Farmer, J., EPA/ESD. May 11, 1990. Response to Section 114 information request.

17. Survey response and attachments from The Lilly Company to to Farmer, J., EPA/ESD. May 14, 1990. Response to Section 114 information request.

18. Survey response and attachments from The Valspar Corporation to Farmer, J., EPA/ESD. May 10, 1990. Response to Section 114 information request.

19. Survey response and attachments from Guardsman Products, Inc., to Farmer, J., EPA/ESD. May 10, 1990. Response to Section 114 information request.

20. Survey response and attachments from Amity Quality Restoration Systems, Inc., to Farmer, J., EPA/ESD. May 13, 1990. Response to Section 114 information request.

21. Schrantz, J., editor. EPA Glossary. Industrial Finishing. August 1989. pp. 45-59.

22. Telecon. Caldwell, M. J., Midwest Research Institute, with Tucker, R., Guardsman Products, Inc. January 29, 1991. Discussion of wood furniture finishing sequences and other aspects of the wood furniture industry.

23. Memorandum. Christie, S., Midwest Research Institute, to Catlett, K., EPA/ESD/CPB. Summary of Wood Finishing Seminar conducted in Grand Rapids, Michigan, from March 4-5, 1991. March 12, 1991. (Presentation by J. Kelbel, Guardsman products.) pp. 8-12.

24. Domsey, S. Woodworker's guide to conventional finishes. Furniture Design and Manufacturing. January 1988. pp. 54-57.

25. Chemcraft Sadolin International, Inc. Wood Finishes Brochure. Walkertown, North Carolina.

26. Memorandum. Christie, S., Midwest Research Institute, to Catlett, K., EPA/ESD/CPB. Preliminary Assessment of Industrial Solvent Use in Wood Furniture Coating Operations. January 28, 1991.

27. Alternative Control Techniques--Control of Volative Organic Compound Emissions from Industrial Cleaning Solvents. February 1994. EPA-453/R-94-014.

28. H. Van Noordwyk, Acurex Corp. Reducing Emissions From the Wood Furniture Industry with Waterborne Coatings. Prepared for the Environmental Protection Agency. EPA-600/2-80-160. July 1980.

29. SRI International. The U.S. Paint Industry Data Base. Prepared for The National Paint and Coatings Association, September 1990.

30. Memorandum from Caldwell, M. J., Midwest Research Institute, to Catlett, K., EPA/ESD/CPB. Summary of Existing Regulations. March 6, 1990.

31. Telecon. Christie, S., Midwest Research Institute, with D. Belik, Bay Area Air Quality Management District. January 24, 1991. Wood Coatings Regulation.

32. Telecon. Beall, C., Midwest Research Institute, with C. Lee, Bay Area Air Quality Management District. December 13, 1991. Wood Coatings Regulation.

33. Telecon. Beall, C., Midwest Research Institute, with J. Ross, Illinois Environmental Protection Agency. December 17, 1991. Wood Furniture Rule.

34. Telecon. Beall, C., Midwest Research Institute, with T. Jones, Indiana Department of Environmental Management. December 18, 1991. Wood Furniture and Cabinet Coating Rule.

35. Telecon. Beall, C., Midwest Research Institute, with G. Walker, New Jersey Department of Environmental Protection. December 11, 1991. Wood Furniture Coating Regulation.

36. Telecon. Beall, C., Midwest Research Institute, with K. Heiss, San Diego County Air Pollution Control District. December 13, 1991. San Diego Wood Products Coating rule.

37. Telecon. Christie, S., Midwest Research Institute, with R. Oja, South Coast Air Quality Management District. November 2 and 6, 1990. Transfer Efficiency Test Protocol Development Program.

38. Telecon. Beall, C., Midwest Research Institute, with M. Price, South Coast Air Quality Management District. December 11, 1991. Wood Furniture Coating Regulation.

39. Telecon. Beall, C., Midwest Research Institute, with D. Ono, South Coast Air Quality Management District. December 11, 1991. Implementation of the Wood Furniture Coating Regulation.

40. Telecon. Beall, C., Midwest Research Institute, with A. Latif, South Coast Air Quality Management District. January 7, 1992. Spray Gun Cleaning Requirements for Wood Furniture Coating Operations.

41. Telecons. Caldwell, M.J. with Illinois Environmental Protection Agency, Indiana Department of Environmental Management, South Coast Air Quality Management Division, Bay Area Air Quality Management Division, San Diego Air Quality Management Division. October 25, 1994. Changes to Wood Furniture Regulations.

3.0 EMISSION CONTROL TECHNIQUES

This chapter discusses volatile organic compound (VOC) emission control techniques that could potentially be used for wood furniture finishing and cleanup operations. The control techniques addressed in this chapter have been divided into four categories: add-on control devices, lower VOC coatings, emerging technologies, and pollution prevention.

3.1 ADD-ON CONTROL DEVICES

Add-on control devices are addressed within two categories: combustion control devices and recovery devices. Combustion control devices are defined as those devices used to destroy the contaminants, converting them primarily to carbon dioxide (CO_2) and water. The combustion control devices evaluated within this section include thermal incineration with recuperative and regenerative heat recovery and catalytic incineration.

Recovery devices are used to collect VOC's prior to their final disposition, which may include VOC recovery, destruction, or disposal. One recovery device that is addressed in this section is carbon adsorption in conjunction with regeneration of the carbon bed by steam or hot air. In either scenario, the VOC's may be recovered or disposed of following regeneration. Another system discussed is a proprietary system that uses oxidant-ozone counterflow wet scrubbing and granular-activated carbon adsorption with cold oxidation regeneration. Also within the recovery devices section, information regarding carbon adsorption with final destruction of VOC's by incineration is provided.

Following the discussion of add-on control devices, wood furniture finishing line modifications that could be implemented

in conjunction with add-on controls are described. The finishing line modifications discussed include those that would reduce the volume of air sent to the control device and/or improve the efficiency of capturing the VOC's to be sent to the control devices. Specific finishing line modifications identified in this section include recirculation of spray booth exhaust and conversion of the finishing room into a total enclosure. The feasibility of applying these methods to wood furniture finishing operations is also addressed.

3.1.1 Combustion Control Devices

Combustion is a rapid, high-temperature, gas-phase reaction in which VOC's are oxidized to CO_2, water, sulfur oxides (SO_x), and nitrogen oxides (NO_x). If combustion is not complete, partial oxidation products, which may be as undesirable as the initial VOC's, could be released. In order to avoid such occurrences, excess air (above the stoichiometric requirement) is used. More complete process descriptions are provided below for each type of combustion control device.[1]

In addition to the process descriptions, control device efficiency and the applicability of the control device to wood furniture finishing operations are discussed for each of the combustion control devices identified in this section.

3.1.1.1 Thermal Incineration.

3.1.1.1.1 Thermal incineration process description. Thermal incineration is a process by which waste gas is brought to adequate temperature, and held at that temperature for a sufficient residence time for the organic compounds in the waste gas to oxidize.[2] The constituents of the waste streams generated by wood furniture finishing operations will be converted to CO_2 and water in the presence of heat and sufficient oxygen.

A schematic diagram of a typical thermal incineration unit is provided in Figure 3-1. Primary components of the thermal incineration unit include a fan, a heat recovery device, the combustion chamber, and the exhaust stack. The heat recovery device is used to preheat the incoming waste stream so that less auxiliary fuel is required in the combustion chamber. This type

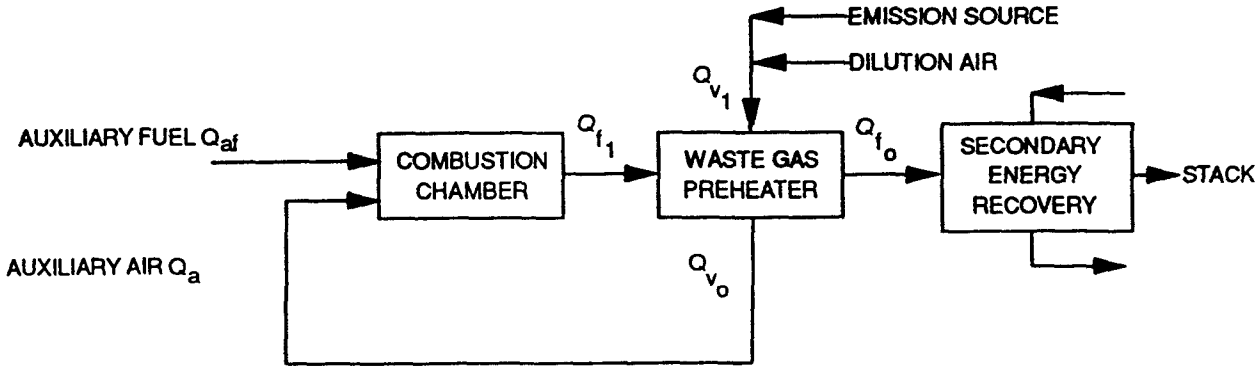

Figure 3-1. Thermal incinerator--general case.

of heat recovery is known as primary heat recovery and can generally be described as either recuperative or regenerative. If the exhaust stream is of sufficient temperature and/or heating value so that little or no auxiliary fuel is needed, heat recovery may not be cost effective and thus may not be implemented. However, when auxiliary fuel is required, heat recovery can be used to minimize energy costs. Each type of heat recovery is discussed in more detail in Section 3.1.1.1.3.

In order for the thermal incinerator to achieve the desired destruction efficiency, certain key parameters must be controlled. These parameters include the combustion airflow rate, the waste stream flow rate, auxiliary fuel requirements, residence time, combustion chamber operating temperature, and the degree of turbulence between the air and combustible materials. Residence time is the time required for the initiation and completion of the oxidation reactions. Operating temperature is a function of the residence time, the oxygen concentration, the type and concentration of the contaminant involved, the type and amount of auxiliary fuel, and the degree of mixing. The destruction efficiency for a particular contaminant is a function of the operating temperature and residence time at that temperature. A temperature above 816°C (1500°F) will destroy most organic vapors and aerosols. Turbulence, or the mechanically induced mixing of oxygen and combustible material, can be increased by the use of refractory baffles and orifices to force adequate mixing in the combustion chamber. Alternatively, mixing can be enhanced by the use of over-fire air, the injection of air into the combustion zone at a high velocity, or by a forced air draft.[3]

3.1.1.1.2 Standard operating conditions. Thermal incinerators generally operate at a temperature ranging between 650° and 870°C (1200° and 1600°F) and require a minimum residence time of 0.3 seconds in the combustion zone.[4] Most thermal units are designed to provide no more than 1 second of residence time to the waste gas in the combustion chambers.[5] Thermal incinerators can be designed to control flow rates in excess of

2,832 cubic meters per minute (m^3/min) (100,000 cubic feet per minute [ft^3/min]). The VOC concentration of waste streams controlled via thermal incineration can be from the part per million (ppm) range to 25 percent of the lower explosive limit (LEL). The VOC concentrations typically cannot exceed 25 percent LEL for safety and insurance reasons.

3.1.1.1.3 Heat recovery. Heat recovery is a method of reducing energy consumption of the incinerator or some other process operation. Primary heat recovery describes the process of preheating the incoming waste stream to the incinerator by transferring heat from the incinerator exhaust so that less auxiliary fuel is required in the combustion chamber. Secondary heat recovery refers to the exchange of heat in the exhaust leaving the primary heat recovery device to some other medium that is used in plant processes.

Primary heat recovery can be accomplished using recuperative or regenerative devices. The waste gas preheater shown in Figure 3-1 could be a recuperative heat exchanger. As shown in this figure, a heat exchanger is used to transfer heat to the incoming waste stream from the incinerator exhaust stream. In a recuperative heat exchanger, heating of the incoming stream by the incinerator effluent is a continuous, steady-state process. Types of heat exchangers that are typically used for recuperative heat recovery include plate-to-plate and shell-and-tube. The type of heat exchanger that is chosen is based on the waste gas flow rate, the desired heat exchange efficiency, the temperature of the incinerator exhaust stream (used for preheat), and economics. Recuperative heat exchangers can recover 70 percent of the energy in the incinerator exhaust gas, thereby reducing fuel, the primary operating cost, by 70 percent.[6]

An incinerator employing regenerative heat recovery is presented in Figure 3-2. Figure 3-2 illustrates a two-chamber design in which process exhaust air is purified in a conventional combustion chamber but uses two beds of ceramic material to recover thermal energy. The process exhaust passes through a bed of ceramic heat sink material that was left hot at the end of a

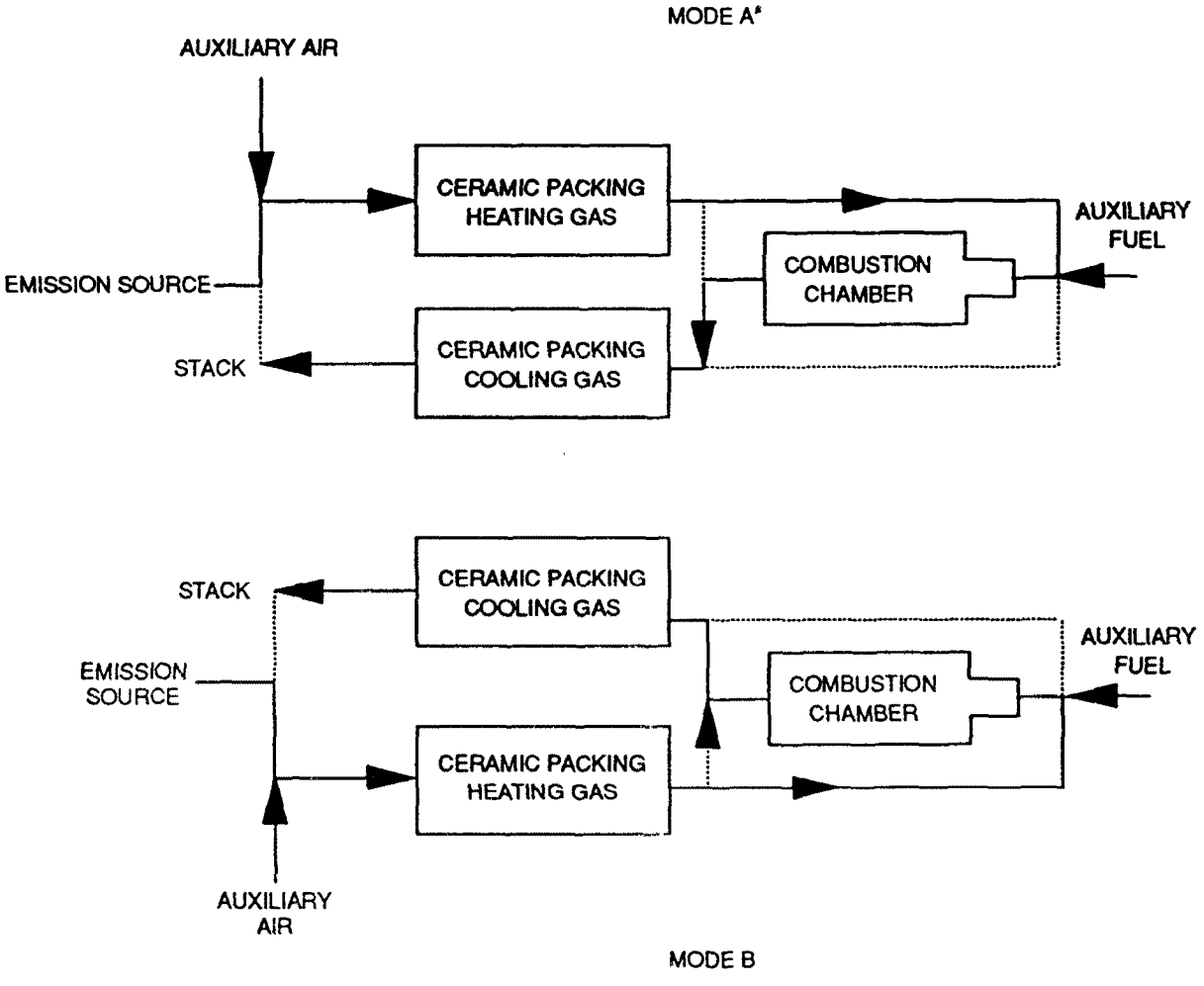

Figure 3-2. Regenerable-type thermal incinerator.

preceding cycle. As the air passes over the ceramic, it extracts heat from the bed. This leaves the ceramic bed cool at the end of the cycle and raises the air temperature to near the desired thermal destruction temperature (combustion chamber temperature). Additional heat to achieve the destruction temperature is obtained by firing natural gas, propane, or fuel oil into the combustion chamber. The airstream leaving the combustion chamber passes through the other ceramic bed, which was left cool during the preceding cycle. The ceramic bed absorbs the heat from the airstream, leaving the ceramic bed hot at the end of this cycle and the exit airstream relatively cool.

The inlet and discharge airstreams are reversed, so that the ceramic beds absorb and reject heat from the airstream on a cyclical basis.

When the cycle reverses and the ceramic bed at the inlet becomes the bed at the outlet, there is still some contaminated air left in the ceramic bed chamber. In order to attain the maximum overall destruction efficiency from a regenerative thermal incinerator, it is necessary to displace the volume of contaminated air in the inlet heat sink chamber into the combustion chamber before extracting the high-temperature combustion air through it. A system designed to "purge" the chamber is provided in a three-chamber design. In this system the same type of absorption/rejection of heat occurs, but the third chamber allows time between inlet and discharge cycles to purge each chamber at the end of an inlet cycle.

Regenerative heat recovery systems can recover 95 percent of the energy in the incinerator exhaust gas, with a comparable reduction in fuel, the major operating cost.[6]

3.1.1.1.4 Thermal incinerator efficiency. Studies indicate that a well designed and operated commercial incinerator can achieve at least a 98 percent destruction efficiency (or an outlet concentration of 20 ppm) of organics. This destruction efficiency corresponds to incinerators that are operated at 871°C (1600°F) with a nominal residence time of 0.75 second.[7]

3.1.1.1.5 Applicability to wood furniture finishing exhaust streams. Thermal incinerators can be used to control waste streams containing various organic compounds and thus are technically feasible for controlling emissions from wood finishing operations. The compounds typically contained in wood furniture finishing exhaust streams (aromatic hydrocarbons, ketones, acetates, and alcohols) are also present in exhaust streams from other industries and have been demonstrated to be readily converted to innocuous compounds using thermal incineration technology. Based on information gathered from the surveys sent to industry, thermal incineration is being used to control VOC emissions in the kitchen cabinet and business furniture manufacturing segments.

The exhaust stream from conventional wood furniture finishing operations is characterized as a dilute concentration of VOC in a high-volume airflow. The costs associated with control of a dilute air stream can be very high due to supplemental fuel requirements. (Details regarding costs are provided in Chapter 5). However, incorporating heat recovery into the thermal incineration design can minimize supplemental fuel requirements and associated costs. The quantity of process exhaust (e.g., airflow) from wood furniture finishing operations can be reduced by recirculating the exhaust from spray booths, as discussed in Section 3.1.3, or by reducing airflow through the use of air curtains.

3.1.1.2 Catalytic Incineration.

3.1.1.2.1 Catalytic incineration process description. Catalytic incineration is comparable to thermal incineration in that VOC's are heated to a temperature sufficient for oxidation to occur. However, with catalytic incineration, the temperature required for oxidation is considerably lower than that required for thermal incineration because a catalyst is used to promote oxidation of contaminants.[8] The catalyst is imposed on a large surface containing many active sites on which the catalytic reaction occurs. Platinum is the most widely used catalyst; palladium is also commonly used.[9] Because the metals used as

catalysts are expensive, only a thin film is applied to the supporting substrate. A commonly used supporting substrate is ceramic.

Figure 3-3 is a schematic of a typical catalytic incineration system. As indicated in this figure, components of the system include a fan, a preheat burner, a combustion mixing chamber, a catalyst chamber, a waste gas preheater (recuperative heat recovery device), secondary heat recovery, and a stack. The preheat burner is used to heat the incoming waste stream to the required oxidation temperature, usually between 149° and 482°C (300° and 900°F) for catalytic incineration.[10] The mixing chamber is used to thoroughly mix the hot combustion products from the preheat burner with the exhaust waste stream. This ensures that the stream sent to the catalyst bed is of uniform temperature. The combustion reaction then takes place at the catalyst bed. The catalyst bed may be a fixed bed or a fluidized bed consisting of individual pellets enclosed in a screened unit. The recuperative heat recovery device (if incorporated) is a shell-and-tube or plate-to-plate heat exchanger. A heat recovery device is used if supplemental fuel requirements are expected to be high.[10]

Many parameters affect the performance of a catalytic incineration system. The primary factors include operating temperature, space velocity (inverse of residence time), VOC concentration and species, and catalyst type and susceptibility to contaminants.[10] The optimum operating temperature depends on the type of catalyst, as well as the concentration and type of VOC's. Space velocity is defined as the volume of gas entering the catalyst bed divided by the volume of the catalyst bed. Space velocity depends on operating temperature. However, in general, as space velocity increases, destruction efficiency decreases.[10] The amount and type of VOC determine the heating value of the waste stream and thus the amount of supplemental fuel required to maintain the desired operating temperature.

The type of catalyst that is used is determined by the VOC compounds in the waste stream. Particulates and catalyst poisons

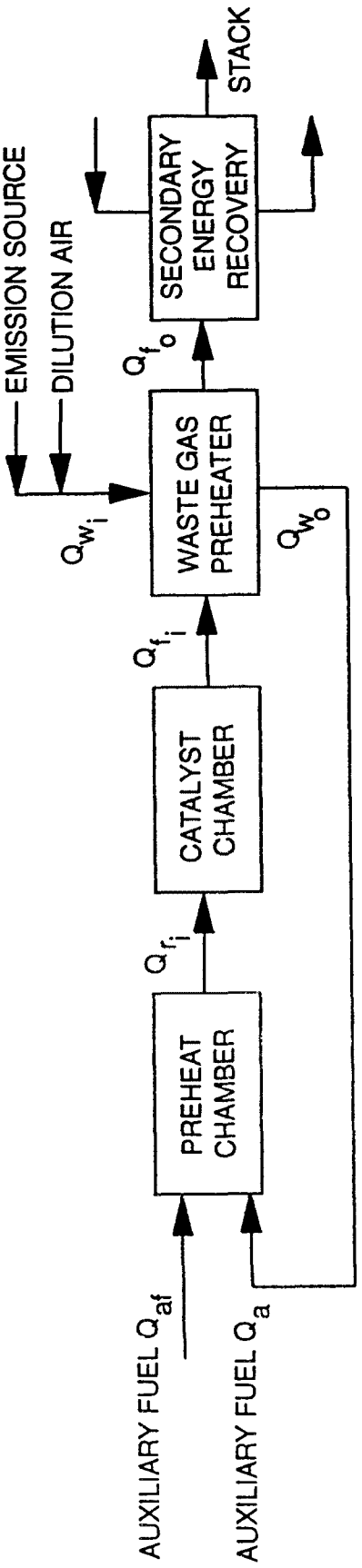

Figure 3-3. Catalytic incinerator.

in the waste stream can affect the efficiency of the catalyst and its lifetime. Some materials that are considered catalyst poisons include heavy metals (mercury, lead, iron, etc.), silicon, sulfur, halogens, organic solids, and inert particulates.[10] Particulates and poisons reduce the activity of the catalyst site, minimizing sites available for the oxidation reaction. These materials can also mask, plug, or coat the catalyst surface, thereby eliminating available catalyst sites.

3.1.1.2.2 Standard operating conditions. The catalyst bed in catalytic incinerators generally operates at temperatures ranging between 149° and 482°C (300° and 900°F), with temperatures rarely exceeding 538°C (1000°F). The contact time required between the contaminant and the catalyst so that complete oxidation occurs is normally 0.3 second. The excess air requirements for catalytic incineration units are usually only 1 to 2 percent higher than the stoichiometric requirements.[8,11] Catalytic incinerators can be designed to control waste gas flow rates up to about 1,416 m^3/min (50,000 ft^3/min). The VOC content of the waste stream may be in the part-per-million range up to 25 percent LEL.

3.1.1.2.3 Catalytic incinerator efficiency. A well operated and maintained catalytic incineration unit can achieve destruction efficiencies of 98 percent, comparable to thermal incineration units. The destruction efficiency would decrease in the presence of the catalyst poisons and particulates described above.[12]

3.1.1.2.4 Applicability to wood furniture finishing operations. Factors to consider in determining if catalytic incineration is suitable for controlling VOC emissions from wood furniture finishing operations include the waste gas flow rate, the concentration of contaminants, and the presence of catalyst poisons and particulates. Catalytic incineration units can be designed to control the high-volume, low-concentration waste streams from wood furniture finishing operations. As with thermal incineration units, heat recovery and volume reduction techniques are necessary to decrease the size of the unit

required and associated capital and operating costs. Particulate matter in the waste stream would have to be removed using filtration to prevent fouling of the catalyst bed. (This filtration would be in addition to the dry filters already used on the majority of existing spray booths.) In general, catalyst poisons would not be present in the waste stream from wood furniture finishing operations unless large quantities of halogenated materials are used (for example, halogenated cleaning materials) and their emissions controlled through the catalytic incinerator. Based on information obtained during the regulatory negotiation effort, there is presently at least one business furniture manufacturer using a fluidized-bed catalytic incinerator to control VOC emissions.

A potential concern associated with using catalytic incineration is the variability of the wood finishing waste gas flow rate and VOC concentration. A constant gas flow rate and concentration is recommended for optimal operation. The VOC's contained in the exhaust flow from wood furniture coating operations vary in composition and concentration, depending upon which spray booths are being used and which coatings are being sprayed, as well as the on/off nature of the spraying operation itself as pieces pass through the booth. One vendor felt that any application that involves many different types of pollutants or particulates, or the potential for change in the types of pollutants could significantly decrease the catalyst life.[13-19]

3.1.2 Recovery Devices

Volatile organic compounds in a waste gas stream can be collected through adsorption of the contaminants onto a porous bed. The contaminants can then be recovered, if desired, by desorption of the bed with steam or hot air. After desorption, or regeneration, contaminants can be condensed and recovered or disposed of. Alternatively, after regeneration by hot air, contaminants can be sent to an incinerator for destruction. This section discusses the use of activated carbon adsorption systems followed by steam and hot air regeneration, carbon adsorption in

conjunction with incineration, and activated carbon adsorption used in conjunction with oxidant/ozone wet scrubbing.

The efficiency of carbon adsorption systems and their applicability for controlling emissions from wood furniture finishing operations are also discussed below.

3.1.2.1 Carbon Adsorption.

3.1.2.1.1 Carbon adsorption process description. The carbon adsorption process used to control VOC emissions from waste gas streams can be subdivided into two sequential processes. The first process involves the adsorption cycle, in which the waste gas stream is passed over the adsorbent bed for contaminant removal. The second process involves regeneration of the adsorbent bed, in which contaminants are removed using a small volume of steam or hot air, so that the carbon can be reused for contaminant removal.

Adsorption is the capture and retention of a contaminant (adsorbate) from the gas phase by an adsorbing solid (adsorbent). The four types of adsorbents most typically used are activated carbon, aluminum oxides, silica gels, and molecular sieves. Activated carbon is the most widely used adsorbent for air pollution control and is the only type of adsorbent discussed in this section.[20] Both the internal and external surfaces of the carbon are used as adsorption sites. Diffusion mechanisms control the transfer of the adsorbate from the gas phase to the external surface of the carbon, from the external surface of the carbon to internal pores, and finally to an active site in the pores. Adsorption depends on a mass transfer gradient from the gas phase to the surface. Van der Waals forces attract the adsorbate to the carbon. Because adsorption is an exothermic process, some method of heat removal from the carbon may be necessary, depending on the amount of contaminant being removed from the gas phase.[21]

Regeneration is the process of desorbing the contaminants from the carbon. Regeneration of the carbon bed is usually initiated prior to "breakthrough." Breakthrough, as the name implies, is that point in the adsorption cycle at which the

carbon bed approaches saturation and the concentration of organics in the effluent stream begins to increase dramatically. If the carbon bed is not regenerated, the concentration of VOC's in the effluent will continue to increase until it is equal to that of the inlet; i.e., the carbon is saturated.[22] Regeneration can be accomplished by reversing the conditions that are favorable to adsorption--by increasing the temperature and/or reducing the system pressure. The ease of regeneration depends on the magnitude of the forces holding the VOC's to the surface of the carbon. The most common method of regeneration is steam stripping. Low-pressure, superheated steam is introduced into the carbon. The steam releases heat as it cools; this heat is then available for adsorbate vaporization. Another regeneration method is the use of hot, inert gas or hot air. With either steam or hot air regeneration, the desorbing agent flows through the bed in the direction opposite to the waste stream. This desorption scheme allows the exit end of the carbon to remain contaminant-free.[23]

In a regeneration process, some adsorbate, known as the "heel," may remain in the carbon after regeneration. The actual capacity of the carbon is referred to as the working capacity and is equal to the total capacity of the carbon less the capacity taken by the heel.[22]

Adsorption units that are commonly used to remove contaminant from waste gas streams include the following:

1. Fixed or rotating regenerable carbon beds;
2. Disposable/rechargeable carbon canisters;
3. Traveling bed carbon adsorbers;
4. Fluid bed carbon adsorbers; and
5. Chromatographic baghouses.

Of the five adsorption systems listed above, the first two are most commonly used for air pollution control. The disposable/rechargeable canisters are used for controlling low flow rates (less than 3 m^3/min (100 ft^3/min) and would not be used to control the high-volume flow rates typical of wood furniture finishing operations. Only the fixed-bed, regenerable

carbon adsorption system is discussed in this section.[24] Carbon adsorption systems that use a rotating bed are addressed in Section 3.1.2.2 and in Chapter 5.

A fixed-bed, regenerable carbon adsorption system is presented in Figure 3-4. The components of the carbon adsorption system include:

1. A fan (to convey the waste gas into the carbon beds);
2. At least two fixed-bed carbon adsorption vessels;
3. A stack for the treated waste gas outlet;
4. A steam valve for introducing desorbing steam;
5. A condenser for the steam/contaminant desorbed stream; and
6. A decanter for separating the VOC condensate and water.

In the system depicted in Figure 3-4, one carbon vessel is being used for adsorption while the other is being regenerated. Both vessels will alternate in the adsorption and regeneration modes. The steam is used to regenerate a vessel and is then sent to a condenser. The condensate is a water/VOC mixture. The decanter can be used to separate the condensate into a water stream and a condensate stream. Depending on its measured toxicity, the water may be treated or discharged to the sewer. The condensed organics can be recycled (if usable), used as a fuel, or disposed of.

In lieu of using steam for regeneration, hot air or a hot inert gas could be employed. After regeneration, the desorbing stream would then consist of an air or gas stream with a high VOC concentration. This air or gas stream could then be sent to an incinerator for final destruction of VOC's. A carbon adsorption/incineration system is discussed in detail in Section 3.1.2.2.

Several factors affect the amount of material that can be adsorbed onto the carbon bed. These factors include type and concentration of contaminants in the waste gas, system temperature, system pressure, humidity of waste gas, and residence time.[22]

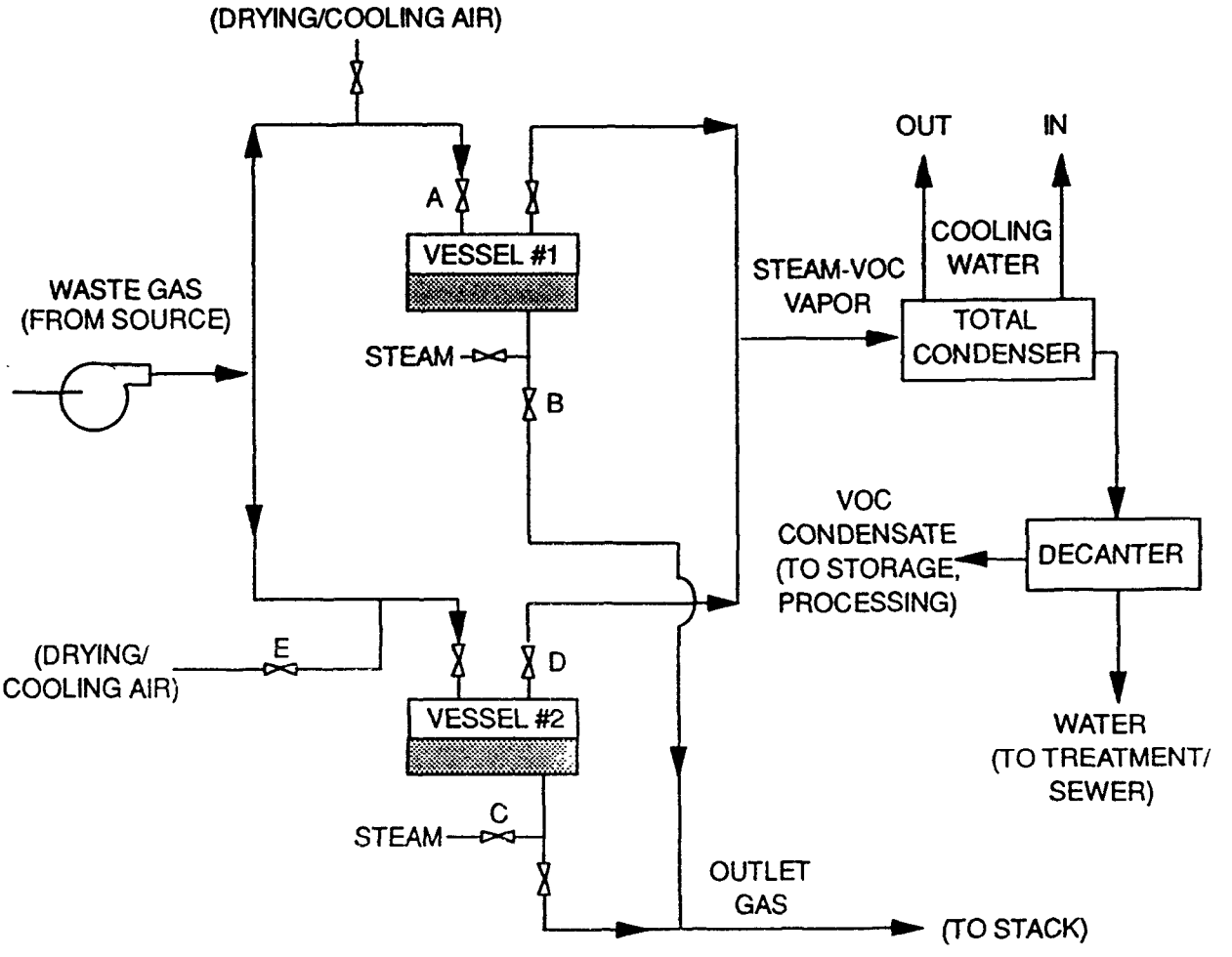

Figure 3-4. Typical two-bed, continuously operated fixed-bed carbon adsorber system.

The type and concentration of contaminants in the waste stream determine the adsorption capacity of the carbon. Adsorption capacity is defined as the pounds of material adsorbed per pound of carbon. In general, adsorption capacity increases with a compound's molecular weight or boiling point, provided all other parameters remain constant. There is also a relationship between concentration and the carbon adsorption capacity. As concentration decreases, so does the carbon capacity. However, the capacity does not decrease proportionately with the concentration decrease. Therefore, carbon capacity still exists at very low pollutant concentration levels.[22]

Operating temperature also affects adsorption. Adsorption efficiency decreases with increasing temperature. At elevated temperatures, the vapor pressure of the contaminants will increase, reversing the mass transfer gradient. Contaminants would then be more likely to be desorbed back into the gas phase than to be retained on the carbon. At lower temperatures, the vapor pressures are lower, favoring retention of the contaminants by the carbon.[25]

The system pressure also influences the adsorption effectiveness. Increases in the gas phase pressure promote more effective and rapid mass transfer of the contaminants from the gas phase to the carbon. Therefore, the probability that the contaminants will be captured is increased.[25]

The relative humidity or moisture content of the gas phase affects the adsorption efficiency. Although water vapor is not preferentially adsorbed over the contaminants, the presence of water vapor in the gas phase has been demonstrated to have a detrimental effect on the adsorption capacity of the carbon. However, the effect of humidity or moisture in the gas phase is insignificant for VOC concentrations greater than 1,000 ppm and during the initial startup of the adsorption cycle (the carbon is drier). Indeed, some moisture content in the gas phase can be beneficial. For instance, when high concentrations of contaminants with high heats of adsorption are present, the temperature of the carbon bed may rise considerably during

adsorption due to the exothermic nature of the process. The presence of water may minimize the temperature rise.[22]

Residence time has a minor effect on the adsorption efficiency. The contaminants require sufficient contact time with the active sites of the carbon to allow enough time for mass transfer to occur. This is especially true if there are many molecules (high-concentration streams) competing for the same sites. Residence, or contact, time of the contaminants with the active sites can be increased by using larger carbon beds, but then the pressure drop across the system increases, resulting in increased operating costs.[25]

3.1.2.1.2 Standard operating conditions. Fixed-bed carbon adsorption units have been sized to handle flow rates ranging from several hundred to several hundred thousand ft^3/min. There is no obvious practical limit to flowrate because multibed systems operate with multiple beds in simultaneous adsorption cycles. The VOC concentrations of the waste streams controlled by carbon adsorption units can range from the part per billion level to as high as 20 percent of the LEL. Adsorption systems typically operate at ambient pressure and temperatures ranging between 25° and 40°C (77° and 104°F).[24]

3.1.2.1.3 Carbon adsorption efficiency. Carbon adsorption recovery efficiencies of 95 percent and greater have been demonstrated to be achievable in well designed and well operated units.[26-28] The performance of the carbon adsorption unit is negatively affected by elevated temperature, low pressure, high humidity, etc. as previously discussed.

3.1.2.1.4 Applicability to wood furniture finishing exhaust streams. Wood furniture finishing exhaust streams are characterized as high-volume, low-concentration exhaust streams. Typical contaminants may include but are not limited to aromatic hydrocarbons, ketones, acetates, and alcohols. Exhaust streams are usually at ambient temperature and pressure. Relative humidity of the streams varies depending on the process and location of the plant.

Based on the characterization of the wood furniture exhaust streams, carbon adsorption would be technically feasible to control the VOC emissions from finishing operations. As with the other add-on control options, air volume reduction techniques should be explored to decrease capital and operating costs. Also, particulate control is important to prevent fouling of the carbon bed. If a specific plant is concerned with the relative humidity of the waste stream, dehumidification options such as refrigeration should be evaluated. The contaminants that are typical of wood furniture finishing process exhaust (aromatic hydrocarbons, ketones, acetates, and alcohols) can be adsorbed to an activated carbon bed. Some alcohols, such as methanol, are not adsorbed as readily as the other contaminants. Carbon adsorption vendors indicated that a carbon adsorption system designed for an exhaust stream containing methanol would probably be more expensive.[29-31] Ketones exothermically polymerize on the carbon bed. A system designed for ketones must ensure the airflow through the bed is sufficient to remove the heat of reaction so that the bed temperature is not significantly affected. Humidity can help keep bed temperatures low. Nonetheless, special operating conditions and provisions to suppress bed fires may be required when ketones are present. Plant-specific studies would be necessary to determine the capacity of carbon required and the recommended regeneration cycle.[31,32]

Based on discussions with several add-on control vendors, it was determined that carbon adsorption followed by steam regeneration (and subsequent condensation of the solvent) is not an appropriate technology for controlling VOC emissions from wood furniture finishing operations. Carbon adsorption followed by condensation is best suited for applications involving only a few different solvents, and there are many different solvents contained in the variety of coatings used by the wood furniture industry.[18,33] Condensing and distilling many different solvents is complicated, and the purity of such distilled solvents limits their use. Because the condensate from a carbon adsorption/

condensation system would most likely still be a mixture of solvents, it would not be suitable for reuse in the coatings. It could potentially be used as a fuel onsite, but because waste-wood boilers are usually present at wood furniture facilities and an abundant supply of wood waste is available, the additional fuel may not be needed. The market value of the fuel is not expected to be significant.[34] It would be necessary, therefore, in some instances, to dispose of the condensate, which could be costly. For these reasons, carbon adsorption followed by steam regeneration was not analyzed further.

3.1.2.2 Carbon Adsorption/Incineration. As discussed in Section 3.1.2.1, carbon adsorption units that are used to remove VOC's from waste gases can be subsequently regenerated using steam or hot air. In streams containing a variety of VOC's, solvent purification is not always cost effective. Disposal costs can also be substantial. When desorption is performed using hot air, an alternative final disposition is incineration. There are systems currently available that use synthetic polymer adsorbents such as that used in the Polyad or Purus Systems, or zeolite as found in the Munter's Zeol System. However, because carbon has been used extensively as an adsorbent in the past, in this section, the use of incineration in conjunction with carbon adsorption systems is discussed. The process description, system efficiency estimates, and an assessment of the applicability of the system to wood furniture finishing operations are provided below.

3.1.2.2.1 Carbon adsorption/incineration process description. A carbon adsorption system in which the desorption stream is sent to an incinerator operates on the principles of adsorption and combustion, which have previously been discussed. Basic system components, include the following:

1. System fan to convey the waste stream to the carbon adsorber;
2. Carbon adsorption unit for collecting contaminants;
3. Inlet air fan for air to be used in regeneration;

4. Heat exchangers for preheating air for regeneration and prior to introduction to the incinerator;

5. Carbon adsorption unit being regenerated;

6. Thermal or catalytic incinerator for VOC destruction; and

7. Exhaust stack for treated (incinerated) exhaust.

During system operation, the process exhaust stream is directed through the carbon adsorption bed, the contaminants are collected on the carbon, and the treated stream is exhausted out a stack. Prior to breakthrough of the carbon, the gas flow is switched to a fresh carbon adsorption bed and the used bed is regenerated. Some designs incorporate a rotary wheel, which contains the adsorbent. The wheel constantly rotates, so that at any time half the adsorbent is adsorbing and half is being regenerated. In the fixed-bed and rotary designs, ambient air is directed through a heat exchanger to be preheated (by the incinerator exhaust) to a temperature sufficient for regeneration. The heated air is used to desorb contaminants from the carbon bed. The desorption air is sent through another heat exchanger to be further heated and then introduced into the incinerator where the contaminants are destroyed. The incinerator exhaust is directed through the two heat exchangers; heat from the incinerator exhaust preheats the outside air and the stream sent to the incinerator.

With the carbon adsorption/incineration system, contaminants from a volume of waste gas are first collected on the carbon bed. A much smaller volume of air (approximately one-tenth the original volume) is used for regeneration and sent to the incinerator. The incinerator used for VOC destruction is much smaller than the unit that would have been required for the initial waste gas volume. Also, the waste stream sent to the incinerator has a higher heating value, so that less auxiliary fuel may be required. Finally, with incineration, the VOC's are destroyed. With carbon adsorption alone, proper disposal of the water/VOC stream must be considered.

3.1.2.2.2 Standard operating conditions. The standard operating conditions that were identified for carbon adsorption units also apply in this case. The carbon adsorption/ incineration systems can handle a broad range of flow rates and VOC concentrations and are especially suited to weaker streams at 100 ppm VOC and below where conventional systems are most expensive to operate.[24]

3.1.2.2.3 Carbon adsorption/incinerator efficiency. A well-designed, -operated, and -maintained carbon adsorption/ incineration system can achieve an overall destruction efficiency of 97 percent. Higher efficiencies have also been reported.[27,35]

3.1.2.2.4 Applicability to wood furniture finishing exhaust streams. As discussed previously, carbon adsorption and incineration are technically feasible technologies for the control of the contaminants present in wood furniture finishing exhaust streams. The use of these two technologies together is also technically feasible. The technology is especially well-suited to applications like the wood furniture industry, which has high-volume, low-concentration exhaust streams with many different solvents present. This technology is currently being used to control VOC emissions in the business furniture manufacturing industry segment.

3.1.2.3 Enhanced Carbon Treatment System. Terr-Aqua Enviro Systems has developed an air pollution control system that is referred to as an ultraviolet (UV)-oxidation air pollution control system. Depending on the contaminants involved and the sources, the specific system designs include aqueous-phase scrubbing and activated carbon adsorption. Oxidant generated on-site, as required, is used to neutralize captured organics on a continuous basis. The resultant exit streams (air and water, as applicable) contain only carbon dioxide and water.[36]

3.1.2.3.1 Enhanced carbon treatment process description. The UV-oxidation technology uses UV light plus ozone and other oxygen-based oxidants to create smog and complete the process of oxidation. Some of the specific equipment designs and process

techniques are proprietary and the subject of patent applications. Basic system components include:

1. Two-stage prefilter to remove particulate;
2. Photolytic reactor, which uses UV light and oxidant to begin destruction of the VOC's;
3. Aqua reactor, where the exhaust is scrubbed with ozonated water and soluble VOC's collect in the water;
4. Water recycling tank, where the VOC's are removed from the water;
5. Carbon adsorber units, which remove the remaining VOC's from the airstream; and,
6. Activated oxygen generators.

Operation of the system can be described as follows. A typical system collects the exhaust from paint booths, ovens, etc. and ducts it to the system where a two-stage prefilter collects particulate from the airflow. From there the air passes through the photolytic reactor, where it is exposed to tuned frequency UV light and injected with oxidant. At this point in the process, the molecular structure of the VOC's is starting to break down. Next, the effluent stream is scrubbed with ozonated water in the aqua reactor. Many of the VOC's are water soluble and will collect in the water. The water is then heavily oxidized in the water recycle tank for an extended period of time, which completes the oxidation of the VOC's to carbon dioxide and water. The process water is then recycled back to the aqua reactor.

After the aqua reactor, the effluent air stream goes through a coalescer, which removes micron-level water droplets and wetted particulate entrained in the airstream. The air then goes into one of two (or more) carbon beds where the remaining organic material is removed. These beds are alternated every 24 hours, or as required. One bed stays on-line to collect VOC's while the other bed is sealed and fed oxidant to regenerate the carbon. This regeneration is the last step of converting the remaining VOC's to carbon dioxide and water.[36-39]

3.1.2.3.2 Standard operating conditions. The standard operating conditions that were identified for carbon adsorption units also apply in this case. Critical components in the UV-oxidation system design are modular in design, thereby accommodating various airflow requirements, from a few 1,000 ft^3/min to as large as necessary. The largest Terr-Aqua UV-oxidation system in operation is designed to control approximately 2,549 m^3/min (90,000 ft^3/min). The UV-oxidation systems are well suited for streams that contain multiple solvents; unlike a conventional steam-regenerated adsorption system, it does not generate a mix of solvents requiring disposal. No secondary wastes are created.[36-39]

3.1.2.3.3 Enhanced carbon treatment efficiency. A well maintained UV-oxidation system can achieve removal and destruction efficiencies in the 95 to 99 percent range.[37]

3.1.2.3.4 Applicability to wood furniture finishing exhaust streams. The UV-oxidation air pollution control system is a feasible control technology for the control of VOC's. Three Terr-Aqua UV-oxidation systems have been installed at aircraft painting facilities operated by General Dynamics; the first system was installed in 1986. As of January 1995, there is only one installation at a furniture plant. A Terr-Aqua system designed to handle 90,000 scfm of exhaust began operating at a large residential furniture plant in November 1991.[40,41]

3.1.3 Methods of Minimizing Control Costs--Volume Reduction

3.1.3.1 Recirculation. As previously discussed, exhaust streams from wood furniture finishing operations are generally high-volume and low-concentration streams. In wood finishing operations, volume reduction techniques should be explored for three reasons, each of which has merit to the plant owner for economic reasons: (1) to reduce air flow sent to an add-on control, (2) to concentrate the air stream to be sent to the add-on control device, and/or (3) to reduce makeup air requirements.

First, prior to buying add-on controls, any reduction in the exhaust air volume from spray operations allows the purchase of a smaller control unit. Second, the exhaust stream would be more

concentrated with the potential for savings in the auxiliary fuel required. (Thus, both capital and operating costs associated with the add-on control device could potentially be reduced.) Third, reduced exhaust air volume reduces makeup air requirements; the energy required for heating and cooling the air would decrease, as would the overall energy cost. This section discusses recirculation of spray booth exhaust as a volume reduction technique. Spray booth design modifications and the applicability of recirculation to wood furniture finishing operations are also addressed in this section.

Recirculation is used as a volume reduction technique to reduce the volume of makeup air required in a spray booth and/or the volume of air sent to an add-on control device. In recirculation, part of the discharge air from the spray booth is recycled. The remaining air is exhausted to the atmosphere or to an add-on control device. Makeup air is supplied at the rate at which air is exhausted to the atmosphere (or control device) from the booth.

The amount of air that can be recirculated is limited by the maximum VOC concentration allowed in the booth. In a manned spray booth, the VOC concentration in the booth must remain below the permissible exposure level (PEL). The Occupational Safety and Health Administration (OSHA) allows the use of recirculation in manned booths, provided the VOC concentration does not exceed the PEL. According to OSHA representatives, the VOC concentration must be measured as soon as recirculation is implemented. The VOC concentration must be measured again if a process modification occurs that could initiate a change in spray booth operations.[43,43]

The OSHA standard governing spray booths was based on an old National Fire Protection Association (NFPA) standard. (NFPA No. 33-1969 is cited in OSHA regulations). The NFPA standard was revised in 1990, but the revised NFPA standard has not been formally incorporated into the OSHA regulations. The current version of NFPA No. 33 (1990) allows spray booth recirculation if the air is continuously monitored and automatic shutdowns are

provided.[44] Though OSHA currently allows the use of recirculation, as described above, the revised NFPA code has not been formally incorporated into the OSHA regulations.

In an automatic spray booth, the VOC concentration in the booth must be less than 25 percent of the LEL, pursuant to insurance company requirements. The NFPA requires an LEL monitor if the VOC concentration is expected to exceed 20 percent of the LEL.[45] The OSHA representative indicated that most spray booths are equipped with alarms that are activated if the VOC concentration exceeds 25 percent of the LEL.[42]

Recirculation may only be feasible if the design of the spray booths that are currently used in finishing operations is modified. The following subsection briefly describes the types of booths currently used in the wood furniture industry and discusses how those booths may need to be modified to incorporate recirculation.

3.1.3.2 Spray Booth Design Modifications. Paint spray booths currently used by wood furniture manufacturers vary according to the coating application method used, as discussed in Chapter 2. Booths in which coatings are applied manually are the most common. They are mostly open and require large volumes of ventilating air. Booths in which coatings are applied using automatic equipment are also used, and these booths are usually more enclosed. In order to incorporate recirculation, the design of the more open booths would need to be modified. The same booth modifications could be performed for both manual and automatic coating operations, with either spray application or flat line finishing.

As was discussed in Chapter 2, a typical manual spray booth is 2.4 m (8.0 ft) high, 5.8 m (19 ft) wide, and 3.0 m (9.9 ft) deep, with three open sides. An example of such a booth is depicted in Figures 2-1 and 2-2. The coatings may be applied manually by a worker using spray guns. The booth is ventilated by a side draft such that the air moves past the worker, over the piece, and through filters to remove overspray and is exhausted

out the booth stack to the atmosphere. Typically, dry filters are used, although some water wash booths are still used.

The OSHA regulations concerning spray finishing operations state that the total air volume exhausted through a spray booth, at a minimum, shall be such as to dilute solvent vapor to at least 25 percent of the LEL of the solvent being sprayed. The regulation also provides a table indicating the minimum required velocities into spray booths, as a function of the type of spray operation (manual or automatic) and spray application method (electrostatic or nonelectrostatic). For manual spray operations using air-operated guns, a minimum design airflow velocity of 30 meters per minute (m/min) (100 feet per minute [ft/min]) is recommended, though velocities in the range of 23 to 38 m/min (75 to 125 ft/min) are in compliance.[46] Based on an average ventilating air rate of 609 m^3/min (21,500 scfm) and a filter cross-sectional area of 14.1 m^2 (152 ft^2) (2.4 m x 5.8 m [8.0 ft x 19 ft]), the average side draft velocity for manual spray booths is 43.0 m/min (141 ft/min).[9]

Both manual and automatic spray booths could be enclosed by minimizing the openings for the piece to enter and exit to the greatest extent possible. The limiting factor will be the size of the largest piece being finished and the space required for the conveying system (hooks, pallets, etc.). The auto industry minimizes the openings by using masks or silhouettes that mount in the booth opening to accommodate differently sized and shaped pieces. Also, the front of the booth, where the worker stands, could potentially be further enclosed. To meet OSHA requirements, the minimum air velocity must be maintained across the entire length of the booth in which the worker could potentially operate. By minimizing the opening in the front of the booth, the ductwork required for recirculation could be installed. The extent of volume reduction is a function of the extent to which the booth openings can be minimized while maintaining the minimum required velocity across the worker.

3.1.3.3 Classic Systems' CamBooth.[47] Classic Systems is a company that has since gone out of business that developed a

unique design called the CamBooth spray booth, herein referred to as CamBooth. Although the company apparently is no longer operating, the CamBooth technology is described in this section to demonstrate the types of modifications that can be made to a spray booth to incorporate recirculation. The company indicated the CamBooth can reduce the volume of exhaust air by approximately 80 percent compared to a conventional spray booth. The basic design of the CamBooth involves the use of air curtains; the worker stands outside of the booth and sprays through the air curtain. The air curtain provides a barrier between the worker and the solvent emissions inside the booth resulting from spraying coating on the piece.

The CamBooth booth can be designed to be from 2.4 to 7.3 m (8 to 24 ft) long. The booth features downdraft design with filters located on the floor of the booth to control the overspray. The face velocity across the filters is between 38 and 61 meters per minute (125 and 200 feet per minute). The total exhaust rate from the Cambooth is from 71 to 170 m^3/min (2,500 to 6,000 scfm), depending on the length. The CamBooth spray booth operates at a slight negative pressure; the makeup air flow is less than the exhaust rate. According to Classic Systems, the air curtains minimize dirt problems typically associated with operating at negative pressure.

The booth design can also include an adjacent, enclosed flash tunnel. As with the spray booth, air curtains separate the air inside the flash area from the outside air. The design is such that if an abatement device is used, the exhaust from the flash tunnel can be sent to the control device. Because the exhaust rate from the CamBooth is so much lower than conventional booths, the reduction in makeup air requirements decreases makeup air heating and cooling costs. Also, because the volume of air exhausted from the booth is low, the capital and operating costs of an add-on control device are reduced.

Advantages of the CamBooth spray booth include the reduced makeup air requirements, the low exhaust volume, and the air curtain design. The low exhaust volume reduces the capital and

operating cost of an add-on control device. The air curtain design separates the worker from the VOC emissions. Thus, the VOC concentrations inside the booth can exceed the normal permissible exposure limit (PEL). Therefore, if an add-on control device were used in conjunction with the CamBooth, a more concentrated stream could be sent to the control device, resulting in lower auxiliary fuel requirements in the case of an incinerator, or greater adsorbent capacity in the case of an adsorber.

A disadvantage of the CamBooth, is that in some instances it unacceptably limits the worker's access to the piece. A demonstration of the CamBooth spray booth was provided at a large household/residential furniture manufacturer. The furniture manufacturer felt that the CamBooth spray booth was not applicable for finishing large three-dimensional pieces. During the demonstration, the spray operator reportedly broke the air curtain (stuck his head through the curtain) in order to reach the back side of the three-dimensional part.[48] Training of the worker may eliminate such problems. If worker training is not sufficient, it may be possible to modify the design of the CamBooth to eliminate this problem.

3.1.3.4 Applicability to Wood Furniture Finishing Operations. Both automatic and manual application booths in the wood furniture finishing industry utilize spray booth recirculation.[45,49] Recirculation is also used in other industries performing surface coating operations involving manual and automatic equipment.[50-54] Studies have also been conducted by EPA to ascertain the feasibility and safety of recirculation.[55,56] Those studies conclude that recirculation can safely and effectively be used in paint spray booths. Based on the use of recirculation by furniture manufacturers and on the studies conducted to date, the incorporation of recirculation appears feasible for all segments of wood finishing, with appropriate booth modification.

An existing spray booth can, in some instances, be modified to incorporate the use of recirculation. However, if an existing

booth is modified, undesirable rolling turbulence may be created, resulting in finish quality problems.[57] The majority of the spray booth vendors contacted recommended replacing the existing booths with new booths that incorporate recirculation into the original design.[54,58-60]

The potential impact of incorporating spray booth recirculation on the insurance premiums for a facility was examined. A representative of a company that insures plants in the wood furniture industry said that there is no simple answer to the question of what would happen to insurance premiums if a manufacturer began using a spray booth with air recirculation. The insurance representative said that the premiums for a facility are determined by an analysis of the entire plant, not just a given area. The representative said that some additional safety precautions, such as installation of an LEL monitor and possibly sprinklers within the booth, could be required if spray booth recirculation is used. Decisions regarding requirements and premiums are site-specific, according to the insurance representative.[61]

Some office and cabinet manufacturers have modified the spray booth designs in their facilities in order to incorporate recirculation.[45] In addition to the facilities already using modified spray booths, some spray booth vendors have designed spray booths that utilize smaller volumes of air. These booths may or may not incorporate recirculation.[62,63] These booths have been and are being tested in facilities that surface-coat and are discussed in further detail in Section 3.3.

As of May 1992, Classic Systems' CamBooth was being used in production at one facility, is being installed at two additional facilities, and was being tested by several others. The CamBooth was being used at a coating manufacturing facility. The CamBooth was installed in April 1992 and is used for spraying test coatings developed by the coating manufacturer.[64]

3.1.4 Total Enclosure of the Finishing Line

The overall control efficiency of an add-on control system is the product of the capture efficiency of the system and the

control device destruction efficiency. Therefore, to achieve the highest overall control, the capture efficiency must be maximized. Capture efficiency is defined as the fraction of all VOC's generated that are captured and sent to an add-on control device. Capture efficiency can be assumed to be 100 percent if the source of VOC is totally enclosed (e.g., spray booth, flash area, etc.). This section describes a total enclosure, provides the EPA criteria for verifying that an enclosure is total, and discusses the applicability of total enclosures for wood furniture finishing lines.

3.1.4.1 Total Enclosure Description/Criteria. A total enclosure is a structure that completely surrounds a source of emissions such that all VOC emissions exhaust through a duct to a control device.

The EPA has developed the following criteria for verifying if an enclosure is a total enclosure.[65]

1. Any natural draft opening (NDO) is at least four equivalent opening diameters from each VOC-emitting point. An NDO is defined as any permanent opening in the enclosure that remains open during operation of the facility and is not connected to a duct in which a fan is installed;

2. The total area of all NDO's does not exceed 5 percent of the surface area of the enclosure's four walls, floor, and ceiling;

3. The average facial velocity (FV) of air through all NDO's is at least 3,600 meters per hour (m/hr) (200 ft/min). The direction of air through all NDO's is into the enclosure; and

4. All access doors and windows whose areas are not included in No. 3, above, are closed during routine operation of the process.

Procedures for determining NDO's and FV are provided in the EPA enabling document, The Measurement Solution--Using a Temporary Total Enclosure for Capture Efficiency Testing.[65]

3.1.4.2 Applicability to Wood Furniture Finishing Operations. A total enclosure may be set up over an individual booth or oven or over an entire finishing line. Alternatively, an entire finishing room may function as a total enclosure.

Establishing a total enclosure for an individual booth/oven/flashoff area may be difficult given the current method of wood furniture finishing. The wet piece leaves the booth, and the solvent in the coating material flashes off in an open area prior to entering the oven. In some facilities, the conveyor loops back and forth to provide increased flash/dry time. In many facilities, expansions have resulted in very little unused space. Therefore, space constraints in the finishing area may prohibit enclosing portions of the finishing line or the finishing line in its entirety. One solution may be to have the entire finishing room function as a total enclosure.

An entire finishing room could function as a total enclosure if it meets the criteria,--i.e., all booths and ovens were exhausted to a VOC control device and there were no other exhaust points from the room. The room would have to be maintained at a slight negative pressure; the volume of makeup air supplied under pressure must be less than the volume of air exhausted. Open windows and doors would be considered NDO's. A total enclosure must be designed to maintain VOC levels below OSHA limits in all areas of the plant.

3.2 LOWER VOC FINISHES

Volatile organic compound emissions from wood furniture finishing operations can be reduced by using coating materials that contain fewer VOC's. Currently in wood furniture finishing operations, VOC emissions result from the application and subsequent evaporation of finishing materials. Efforts have been made to develop and introduce finishing materials for the wood furniture industry that contain fewer VOC's. The EPA has published a report on current and emerging technologies that can reduce VOC emissions from the coating industry.[66] The lower VOC coatings that are currently available or reportedly will be available in the near future are discussed in this section, and

the VOC reductions that these materials offer are identified. The types of finishing operations for which these coatings could potentially be used are also discussed. Finally, the advantages and disadvantages of these lower VOC finishing materials are identified.

3.2.1 Use of Lower VOC Finishing Materials

The finishing material descriptions provided in this section include the finish formulation, the VOC content of the finish, percent solids by weight, and some general finish characteristics. By comparing the VOC content of the conventional finish material currently used by the wood furniture industry with the VOC content of the lower VOC finishes, and assuming the same quantity of solids is applied (except for nonfilm-forming low-solids finishes), an estimate of potential VOC emission reductions associated with each finish is provided. Alternative finishing systems in which some of the steps involve lower VOC finishes are presented for the different model plants in Chapter 5. Waterborne, and higher solids coatings, the lower VOC finishes focused on for the model plants, are discussed in this section.

The VOC emission reductions identified in this chapter have been calculated based on the switch from nitrocellulose-based finishes to the new finishing system. Because the new finishing systems are model plant-specific, the VOC emission reductions presented in Chapter 6 are more likely to represent actual plant emission reductions than the VOC emission reductions presented in this chapter.

The types of finishing materials currently used for wood furniture finishing in general have been identified in Chapter 2. Finishing materials include stain, washcoat, glaze/filler, sealer, highlight, and topcoat. The sealers and topcoats, or lacquers, constitute the majority (approximately 65 percent) of finishing materials used. The lacquers are clear coats and, in the conventional formulations, are nitrocellulose products. The stain materials are alcohol-based and do not contain nitrocellulose. While lower VOC finishes have been developed for

nearly all finish types, the most commonly used lower VOC finishes are those for the clear coat steps. Thus, the focus of this section is on the clear coats. Therefore, when conventional nitrocellulose coatings are discussed, only the lacquers (clear coats) are actually being considered. Lower-VOC stain materials, which reduce the VOC content by replacing some of the alcohol with water, are also being used by the industry.

Lower VOC coatings that could replace the traditional nitrocellulose products include waterborne and higher solids coatings. Higher solids coatings include catalyzed, ultraviolet (UV) - curable, polyester, polyurethane, and those modified for the UNICARB® and VOC Control® coatings systems. A description of the traditional nitrocellulose products and the lower VOC finishes are provided below. In the following descriptions, the VOC contents are provided in: (1) grams of VOC per liter of finishing material, less water, less negligibly photochemically reactive compounds (g/L-water) (pounds of VOC per gallon of finishing material, less water, less negligibly photochemically reactive compounds [lb/gal-water]) and (2) grams of VOC per gram of solids used (g/g solids) (pounds of VOC per pound of solids used [lb/lb solids]). The solids content is expressed as percent solids by weight.

3.2.1.1 Nitrocellulose-Based Finishes. Nitrocellulose-based finishes are the most widely used finishes in the wood finishing industry today.[67] The primary components of these materials are cellulosic resins, film-forming resins, plasticizers, and solvent. Nitrocellulose is the cellulosic resin that is most widely used. It is prepared by nitration of cellulose with nitric acid.[68] The nitrocellulose serves as a binder in the finish material. The film-forming resins are thermoplastic and are characterized by their low resistance to heat and solvents. The plasticizers contained in the finishes can be esters or oils. Solvents are selected depending on required application, manner of drying, and other conditions. Some solvents, such as acetone and ethyl acetate, are included in the formulation due to their high evaporation rate because they

serve to shorten the flashoff time. Other solvents, such as esters and glycol ethers, serve as active solvents to dissolve the nitrocellulose. Finally, solvents such as butyl acetate and xylene are selected for their low evaporation rate to prevent premature drying and the associated problems of bubbling and blistering.[69,70]

Nitrocellulose-based finishes are nonconvertible finishes. That is, film formation and drying occur via solvent evaporation; no chemical reaction, or curing, takes place. Nitrocellulose-based finishes are categorized as fast-drying. They are relatively easy to spray. Because of the low solvent resistance of the thermoplastic resins and nitrocellulose in the formulation, nitrocellulose finishes are easily dissolved, and thus pieces finished with nitrocellulose finishes are both easy to damage and relatively easy to repair.[70,71] Their function is both to give the pieces the desired aesthetics and to protect the substrate.

The average VOC content of nitrocellulose-based lacquers is approximately 727 g/L-water (6.1 lb/gal-water) and 4.0 g/g solids (4.0 lb/lb solids). The solids content of nitrocellulose-based lacquers is approximately 20 percent by weight.[72-77]

3.2.1.2 Waterborne Finishes. Waterborne finishes are finishes in which water is the main solvent or dispersing agent.[78] There are distinct differences between the various waterborne formulations that are available. Based on the types of polymers used in the formulation, waterborne finishes may be water emulsions, solutions, or colloidal dispersions.[78-80] The various polymers determine the cured film properties of the finish. However, there is one common feature: each type employs water as the major solvent or carrying liquid for polymers.[79-80]

Waterborne finishes formulated with water-emulsion polymers are true emulsions; the polymers are discrete water-insoluble spherical particles of high molecular weight uniformly dispersed in water. Waterborne finishes that are considered solutions are formulated with copolymers (referred to as water-reducible polymers in some industry publications) that are formed in a

polymerization reaction occurring in a water-miscible solvent such as alcohol. The polymers have polar groups that allow water-reducibility and, thus, true solutions of polymers in water. Waterborne finishes known as colloidal dispersions contain colloidal dispersion polymers (referred to as water-soluble polymers in some industry publications). These polymers are materials in which particles of a medium molecular weight (not as high as the emulsion polymers) are dispersed in water. The colloidal dispersion polymers have polar groups, thus allowing some degree of solubility. The colloidal dispersion formulations are not true solutions but are also not true emulsions because there is some degree of solubility of the polymers in the solvent.[80]

Each type of waterborne finish, like all finishes, exhibits different film properties depending on the type of polymer in the formulation. The water-emulsion formulations are of a higher molecular weight and therefore offer advantages in the areas of durability and chemical and stain resistance.[79,80] Water-reducible formulations offer high gloss, clarity, and good application properties. However, their film is not as durable as that of the water-emulsions, and the viscosity and properties of the finishes are very dependent on molecular weight.[79] The water-soluble formulations exhibit properties of the water-emulsion and water-reducible formulations. The water-soluble finishes offer high gloss and good application properties and are also durable and chemical- and stain-resistant.[79]

Waterborne finishes can be formulated for air/force drying or for baking, depending on the binders in the formulation.[72,79,81] Waterborne finishes may cure in the same manner as the solventborne finishes. Curing occurs through oxidative or thermosetting cross-linking reactions. Waterborne finishes may also cure via latex coalescence.[79,81] Latex coalescence occurs when a polymer is dissolved in solvent, then dispersed in water. Either the solvent or water then evaporates, leaving a polymer dispersed in solvent or water. As the remaining liquid evaporates, the pressures force the polymer to coalesce. No

polymerization takes place; these are a special form of nonconvertible finishes.

The VOC content of waterborne finishes varies substantially. Waterborne finishes are usually not free of VOC. Cosolvents are added to allow adequate coalescence and film formation, as well as color penetration for pigmented materials.[82] Based on the survey information, waterborne finishes have a VOC content of approximately 328 g/L-water (2.7 lb/gal-water.) The VOC content based on solids ranges from approximately 0.3 to 0.8 g/g solids (0.3 to 0.8 lb/lb solids). The average solids content of the waterborne finishes in the surveys is 24 percent by weight.[77,82-88] Southern California Edison Company conducted a study in 1993 to identify the availability of waterborne finishes with a VOC content of less than 275 g/L-water (2.3 lb/gal-water). Finishes were evaluated on the basis of physical performance and aesthetics and compared to solventborne finishes. The finishes tested did not contain exempt solvents.[89] Based on the VOC content of nitrocellulose-based finishes, the waterborne finishes represent 75 to 88 percent reduction in VOC emissions per weight of solids applied. However, a plant's overall VOC emission reduction depends on the number of finishing steps for which waterborne finishes can be used.

3.2.1.3 Higher Solids Finishes. Higher solids finishes are common in various segments of the wood furniture industry. The higher solids finishes consist of catalyzed, ultraviolet (UV)-curable, polyurethane, polyester, those modified for the UNICARB® system, and those in Akzo's VOC Control® system. Based on equivalent solids applied, the higher solids coating results in lower VOC emissions than traditional finishes. A description of the various higher solids finishes is provided below.

3.2.1.3.1 Catalyzed finishes. The most common catalyzed finishes used in the wood furniture industry today are the acid-catalyzed finishes. The film-forming resins contained in these finishes are usually a urea-formaldehyde or melamine-formaldehyde prepolymer, in admixture with an alkyd resin that serves as a plasticizer. The catalysts that are used in these finishes vary.

Common catalysts contained in the acid-catalyzed finishes include sulfuric acid and p-toluenesulphonic acid.[71] Catalyzed finishes can be in a one-pack or two-pack form. The one-pack finishes are precatalyzed. They contain nitrocellulose resins and a smaller percentage of the urea resin. Also, only a small amount of catalyst is added. Thus, cure time is long; it is usually 3 to 4 weeks until full curing occurs. Eventually, the finishes will cure in the container. The pot life is usually 2 to 3 months.[77] The two-pack finishes must be mixed before use. The two-pack finishes are formulated with urea or melamine resins. More catalyst is contained in these than in the one-pack. Thus, curing time is short. The main advantage of the one-pack form is that the user does not have to be concerned with weighing and mixing constituents prior to application. However, the two-pack products are considered to have superior properties as compared to the one-pack products.[71,72]

Catalyzed finishes are convertible finishes; film formation occurs through curing (polymerization) of the resins rather than drying.[72] The finish is cured through a chemical reaction, the rate of which is controlled by the amount of catalyst in the finish. Depending on the coating formulation and the amount of catalyst used, reaction by-products may include alcohol, formaldehyde, and water.[90] Acceptable catalyzed finishes yield a cured film that is hard, tough, scratch- and impact-resistant, and resists water, alcohol, and common household chemicals.[71]

The VOC content of the catalyzed clear coats used by the industry today is approximately 547 g/L-water (4.6 lb/gal-water) with solids content of 48 percent solids by weight.[72-77,91] The VOC content based on solids is 1.1 g/g solids (1.1 lb/lb solids). Based on the VOC content of the nitrocellulose-based finishes, the catalyzed finishes represent a 62 percent VOC emission reduction per weight of solids applied. Therefore, a facility would reduce VOC emissions by 62 percent for each finishing step that could be converted to catalyzed finishes. However, as previously stated for the waterborne finishes, actual VOC

emission reductions for a particular facility are a function of the number of steps for which catalyzed finishes can be used.

Conversion varnishes are a type of catalyzed coating that are used in the wood furniture industry. Conversion varnishes do not dry as quickly as nitrocellulose finishes, and are difficult to repair. Conversion varnishes, like two-pack catalyzed finishes, have a limited shelf life.

The VOC content of the conversion varnishes used by the industry today is approximately 600 g/L-water (5.0 lb/gal-water), with a solids content of about 35 percent by weight. The VOC content based on solids is approximately 1.9 g/g solids (1.9 lb/lb solids).[72-77,91] Based on the VOC content of nitrocellulose-based finishes, conversion varnishes represent a 43 percent VOC emission reduction per weight of solids applied. However, the total emission reduction depends on the number of finishing steps that are switched to conversion varnishes.

3.2.1.3.2 Ultraviolet-curable finishes. Radiation curing is a technology that utilizes electromagnetic radiation energy to affect chemical and physical change of organic finish materials by the formation of cross-linked polymer networks.[88] One type of radiation used is UV light. The primary components of UV-curable finishes are multifunctional polymers (acrylates, acrylated oligomers), monofunctional diluent monomers, and the photoinitiators. The photoinitiator absorbs the UV light and initiates free radical polymerization, the curing process.[88] The diluent serves as a viscosity modifier for the finish, enabling the finish to be applied to the substrate. It is similar to a solvent in this regard. In traditional UV finishes, however, most of the diluent also polymerizes and becomes part of the coating film.[80] However, the diluent in the finish that does not reach the piece and, thus, is not incorporated into the final film, is emitted.

Ultraviolet-curable finishes are convertible finishes; the curing process is via polymerization. The curing process for UV-curable finishes is very fast. As the substrate is exposed to UV radiation, the photoinitiator absorbs the light and initiates

near-instant polymerization. Polymerization, or curing, of the material is rapid, providing a final film that is stain-, scratch-, and mar-resistant.[71,92] Because the curing is so rapid, finished pieces can immediately be stacked. Other properties of the UV-cured film include heat resistance, durability, and good build.

Ultraviolet-curable finishes do not typically contribute substantial VOC emissions (due to the polymerization process discussed above) and often are considered to contain up to 100 percent solids since 100 percent of the components react to form the coating. Some UV-curable finishes are formulated such that some conventional solvent that volatilizes is added along with the diluent monomer. The VOC content of these materials is approximately 458 g/L-water (3.8 lb/gal-water) and 0.15 g/g solids (0.15 lb/lb solids); they are approximately 87 percent solids by weight.[77,82-84,86-88] The UV-curable finishes represent approximately an 83 percent reduction in VOC emissions per weight of solids applied. However, as previously stated, these emission reductions depend on the number of finishing steps used by a facility that switches from nitrocellulose to UV-curable finishes.

3.2.1.3.3 Polyester finishes. Two types of polyester finishes are available for use in the wood furniture finishing industry. The first type is the styrene-derived polyester. This type of polyester uses styrene as a solvent and reactant for unsaturated alkyd resins contained in the finishes. The styrene-derived finishes contain a dryer, also known as an accelerator or promoter, typically a heavy metal such as cobalt. Curing can occur through a catalytic reaction, or through exposure to UV radiation. To cure the finishes via a catalytic reaction, an organic peroxide is added to serve as a catalyst.[70] The styrene-derived polyesters can be supplied in a two-pack or three-pack form. In the three-pack form, the dryer and catalyst are added by the user. In the two-pack form, the dryer is already in the finish formulation and the catalyst is added.[71]

The second type of polyester finishes is the acrylic polyesters. These finishes contain cross-linking acrylics and solvents such as esters, ketones, and aromatic hydrocarbons. Some of the cross-linking acrylics are modified by styrene and are considered special types of the styrene-derived polyesters. As with the styrene-derived polyesters, curing can occur via a catalytic reaction by organic peroxides or through exposure to radiant energy.[70] The cured films of both types of polyester finishes are characterized as high-build, fast-drying, durable, and heat-, chemical-, and mechanical-resistant materials.[71]

Polyester finishes are very difficult to repair once cured. Therefore, minimizing the amount of dirt in the finishing room is critical to minimizing rejects. Because of this, clean room environments are strongly recommended for polyester finish applications.[82,83]

The styrene-derived polyester finishes are typically 100 percent solids. The VOC's, such as styrene, which are present in the finish formulation, become part of the cured film. However, a small portion of such materials may not cross-link and therefore may result in some VOC emissions. The acrylic polyesters have a VOC content of approximately 402 g/L-water (3.4 lb/gal-water) and 0.21 g/g solids (0.21 lb/lb solids) and a solids content of 80 percent by weight.[77,82,84,87] Based on the VOC content of nitrocellulose-based finishes, polyester finishes represent approximately an 83 percent reduction in VOC emissions per weight of solids applied. However, a facility is not likely to use polyester materials for all of its finishing steps. Therefore, overall emission reductions would be less.

3.2.1.3.4 Polyurethane finishes. Polyurethane finishes are formed through the reaction of a polyhydric alcohol with an isocyanate cross-linking resin. The isocyanates in the formulation may include toluene diisocyanate, naphthalene diisocyanate, or hexamethylene diisocyanate. The polyhydric alcohol could be glycerol, pentaerythritol, or others.[70,93] There are three classifications of polyurethane finishes depending on the formulation or cure process: (1) one-component

products, (2) two-component products, and (3) moisture-cured materials. The one-component and two-component products are different in their formulations. A one-component product is a urethane alkyd, which contains no free isocyanate. The two-component products are the most common and produce a finish by cross-linking a polyester resin with an isocyanate. The moisture-cured product is a special one-component product, based on the way the coating is cured, as discussed below.[93]

The two-component polyurethane finish products are convertible finishes; film formation occurs through polymerization. The finish material is cured through a chemical reaction taking place between the binders in the product and binders in the hardener.[71] Film formation of one-component polyurethane finishes may occur through polymerization or through moisture curing. Moisture-cured finishes are not fully cured through polymerization. However, they are not nonconvertible finishes such as the nitrocellulose-based finishes described above. Final curing of the moisture-cured finishes occurs when moisture in the environment reacts with free isocyanate groups to form the dry film. The curing rate of the moisture-cure finishes cannot be controlled and can require several months for final cure.[70] The final cured film of all the different types of polyurethane finishes is durable. It is resistant to chemicals, scratches, and abrasion. Polyurethane products are characterized as good for polishing, providing a high-gloss finish.[71]

Polyurethane finishes, like polyester, are difficult to repair once they have cured. Because the cured polyurethane film is resistant to solvents, repairs involve mechanically removing the cured coating through abrasion. Due to the difficulty of repair and the final finish achievable once repaired, polyurethane coated pieces are rarely repaired extensively. Therefore, it is critical to minimize the amount of dirt in the finishing room. If dirt gets on a wet nitrocellulose lacquer, it can often be rubbed out after the lacquer has dried. However, polyurethane finishes are not rubbed; it is not possible to remove dirt from cured polyurethane finishes by rubbing. For

this reason, finish suppliers indicate a clean room environment is highly desirable when applying polyurethane finishes.[82,83]

The VOC content of the currently available polyurethane finishes ranges from about 239 to 792 g/L-water (2.0 to 6.6 lb/gal-water) and range from 0.25 to 2.33 g/g solids (0.25 to 2.33 lb/lb solids). The solids content of polyurethane finishes ranges between 30 and 80 percent by weight.[69,77,82,84] As compared to the nitrocellulose-based finishes, polyurethane finishes represent from approximately a 27 to 92 percent reduction in VOC emissions per weight of solids applied. A facility would reduce VOC emissions by this amount for each finishing step that was converted to use polyurethane finishes from using nitrocellulose-based finishes. However, a facility's overall VOC emission reduction would depend on the number of finishing steps for which polyurethane finishes could be used.

3.2.1.3.5 UNICARB® System Finishes. The UNICARB® finishing system was developed by Union Carbide as a way to apply conventional finishes that minimizes the quantity of VOC-containing solvent required. The general concept behind the UNICARB® system is that some of the solvent used for spraying the conventional clear coats is replaced by CO_2. Thus, the UNICARB® system involves modified finishes and a somewhat modified application method, as described in Chapter 2. This section provides information regarding VOC content and solids content of the finishes formulated for use with the UNICARB® system.

The UNICARB® finishes are specially formulated. They contain polymers and high boiling-point solvents that are mixed with liquid CO_2 immediately prior to being sprayed. As a rule of thumb, 1 pound of CO_2 "replaces" 1 pound of solvent in the conventional finishes. The same resins that are used in conventional (nitrocellulose-based) finishes are used in the UNICARB® finishes. UNICARB® finishes are spray-applied and dried in the same manner as conventional (nitrocellulose-based) finishes.[61]

The UNICARB® finishes are only available in clear coat formulations. The VOC content of these formulations is

approximately 643 g/L-water (5.4 lb/gal-water) and 1.4 g/g solids (1.4 lb/lb solids). The solids content of the UNICARB® finishes is approximately 41 percent solids by weight.[77,82,84,85] The VOC content of the UNICARB® finishes represents approximately a 48 percent reduction in VOC emissions per weight of solids applied, compared to their traditional nitrocellulose-based counterparts. However, actual overall VOC emission reductions are a function of the number of finishing steps for which UNICARB® finishes can be used.

3.2.1.3.6 VOC Control® System.[94] The VOC Control® finishing system was developed by Akzo Nobel Coatings, Inc. The VOC Control® system finishes are higher-solids nitrocellulose-based sealers and topcoats. The finishes are heated and then applied using an application system developed by Graco. The Graco system can be either air assisted or air assisted airless, and uses "ultra-high" pressures to atomize the higher-solids finishes.

The higher solids content of the VOC Control® system finishes allows, in some instances, for the user to eliminate finishing steps; by applying more solids during each step, steps can be eliminated.

The VOC content of the VOC Control® system sealers is less than 1.9 g/g solids (1.9 lb/lb solids), and that of topcoats is less than 1.8 g/g solids (1.8 lb/lb solids). The solids content of the VOC Control® finishes ranges from 30 to 50 percent by weight. As compared to conventional nitrocellulose-based finishes, VOC Control® finishes represent about a 41 to 44 percent reduction in VOC emissions per weight of solids applied. A facility would reduce VOC emissions by this amount for each finishing step that was converted to VOC Control® system finishes. However, a facility's overall VOC emission reduction would depend on the number of finishing steps for which VOC Control® system finishes are used.

3.2.2 Applicability of Lower-VOC Finishes to Wood Furniture Finishing Operations

As previously mentioned, nitrocellulose-based finish materials are extensively used in the wood furniture finishing industry. Attempts are being made to reformulate finishing materials, as described above, so that lower-VOC materials can be used. Some of the lower VOC coatings may not apply to all aspects of the wood finishing industry. Therefore, this section identifies the industry segments able to use each of the lower VOC finishes and discusses the shortcomings of the finishes that prevent their more widespread use.

3.2.2.1 Waterborne Finishes. Waterborne finishing materials are currently being used by some furniture manufacturers. The potential exists for waterborne finishes to be used by all segments of the wood finishing industry. However, the waterborne finishes currently available are better suited to certain applications than others. For example:

1. Open-pore woods are considered easier to finish with waterborne finishes than filled pores;[82,84]

2. Darker woods sometimes appear cloudy when finished with waterborne finishes, though the clarity has improved over the last 10 years;[82]

3. Waterborne finishes do not have the rubbability of nitrocellulose lacquers, and the finish is therefore not as glossy where a glossy finish is required; and

4. Waterborne finishes may require a modified drying method (increased airflow and temperature).[82,83]

Some facilities may be able to use waterborne finishes for some finishing steps but not all. According to finish material suppliers, in certain applications only solventborne stains and washcoat can be used because of the problems of grain raising.[82-88] Grain raising is a swelling of the fibers in the wood due to the absorptance of a liquid, such as water. Grain raising causes the surface of the wood to look and feel rough. Waterborne topcoats are available and are used by many segments of the wood furniture industry.[82-88]

3.2.2.2 Catalyzed Finishes. Catalyzed finishes (primarily conversion varnishes) are currently used by kitchen cabinet and office/business furniture manufacturers because of the durable finish that these finishes provide. Catalyzed finishes are also used in the manufacture of knock-down furniture.[71] However, catalyzed finishes are presently not used much in the manufacture of traditional household/residential furniture because the catalyzed finishes do not provide the same appearance as the nitrocellulose-based finishes. Technically, catalyzed finishes could be applied to household/residential furniture and would provide a more durable and stain-resistant surface than the traditional nitrocellulose-based lacquers. The consumer would have to weigh the positive and negative aspects of furniture finished with the two chemistries. If, however, the purpose of the changeover to catalyzed finishes is only VOC emission reduction, other alternative finishes provide more substantial emission reductions.

3.2.2.3 Ultraviolet-Curable Finishes. Ultraviolet-curable finishes are currently used in various segments of the wood finishing industry.[95] Ultraviolet-curable finishes can be applied using spray equipment, roll coaters, or curtain coaters. Therefore, the potential exists for UV-curable finishes to be used on case goods as well as flat pieces, and progress in this direction has been made and is discussed in Section 3.3.3. However, curing of three-dimensional pieces remains difficult because all of the finish material must be exposed to the UV radiation. Problems arise in curing recessed surfaces that do not get direct exposure to the radiation.[83] Therefore, the majority of UV-curable finishes that are used in the wood furniture industry are on flat line operations (although some chair finishing is being done using UV-curable finishes).[96] Many studies are being conducted in the area of three-dimensional UV-curing so that UV-curable materials may experience more widespread use in the future.

Ultraviolet-curable finishes are feasible and demonstrated for finishing operations in which the pieces are flat, with no

significant carvings or recessed areas. There are two types of UV-curable finishes. One type is applied via a curtain coater, roll coater, or similar flat line apparatus. The UV-curable finishes applied by these methods typically are almost 100 percent solids with a VOC content close to zero.[77,82-84,86-88] The other main type of UV-curable finishes are applied using conventional spray application equipment.

As discussed previously, the VOC content, percent solids, and material cost of the sprayable UV-curable finishes are approximately the same as the VOC content percent solids, and cost of the polyester and polyurethane finishes.[77,82-84,86-88] The cost parameters that need to be considered in the conversion are also the same. However, with UV-curable finishes, the additional cost of UV ovens needs to be considered. (Polyesters and polyurethanes can be catalyzed with curing enhanced by conventional ovens.)[82-84,86] Because converting from sprayable solventborne finishes to sprayable UV-curable finishes is expected to be more expensive for a facility than converting to a pe/pu system, and the associated emission reduction would be approximately the same, the use of sprayable UV-curable finishes was not analyzed further.

3.2.2.4 Polyester Finishes. Polyester finishes are similar to polyurethanes in their uses and their limitations. The film properties of the polyester finishes are good; they provide good build and good chemical-, mechanical-, and heat resistance.[69] Polyester finishes, like polyurethane finishes, require a clean room environment, which can be very expensive and difficult to maintain; have a short pot life; and are difficult to repair.[71]

3.2.2.5 Polyurethane Finishes. Polyurethane finishes are used in some segments of the wood finishing industry. Polyurethane materials can be spray-applied or applied by curtain or roll coat, and are cured in the conventional manner. Polyurethane finishes are characterized by a high-gloss look, which may not be desirable to certain segments of the wood furniture industry. Other limitations that may impair its

widespread use include the need for a clean room environment, the short pot life (1 to 6 hours), and the difficulty in repairing.[71]

Polyurethane finishes are based on polyisocyanates, which are manufactured from diisocyanate monomers, which link to form the polyisocyanate chains.[97,98] A common misunderstanding regarding the manufacture and use of polyisocyanates is in the use of monoisocyanates. Monoisocyanates are very volatile and very toxic. However, monoisocyanates are not used in manufacturing polyisocyanates nor are they a byproduct of the manufacturing process.[97,99-101]

The level of worker protection required when using finishes containing polyisocyanates depends on the concentration of polyisocyanates in the air. The OSHA regulations regarding respirators state that air purifying respirators can be safely used at concentrations up to 10 times the threshold limit value. Above this concentration, supplied air respirators must be used.[97] A manufacturer of diisocyanates and polyisocyanates recommends using supplied-air respirators when using polyurethane finishes unless sufficient air monitoring data have been collected to make an alternate decision.[97,102] Further worker protection can be achieved by engineering controls, primarily spray booth design and ventilation to keep the concentrations below the exposure limits.[98] In all use of polyurethane finishes, protection of eyes and skin should be ensured through the use of safety glasses and permeation-resistant gloves (preferably of butyl rubber).[98]

Based on available information, it is possible to safely use polyurethane finishes in wood furniture finishing operations. Spray booths should be designed to minimize the concentration of isocyanates. Some level of respiratory protection should always be worn; the exact type of protection depends on actual measurement of isocyanate levels. Eye and skin protection must always be worn.

3.2.2.6 UNICARB® Finishes. As of October 1994, the UNICARB® finishing system has been purchased by one household/residential furniture manufacturer and is being used in

full production applying topcoat on a chair line. This line was used to conduct an evaluation of product quality, waste reduction, and economic issues for the UNICARB® system in a May 1994 report.[103] Testing has been conducted by a piano manufacturer, and a residential furniture manufacturer that makes occasional furniture, though no purchase agreements with these facilities have been reached.[105,106]

The solids content of UNICARB® finishes is approximately twice that of conventional solventborne finishes. Therefore, in some instances, a coating step can be eliminated if a facility switches to UNICARB®. For instance, if a facility applies two coats of topcoat using conventional finishes, only one coat of UNICARB® topcoat may be required. Whether a finishing step can be eliminated depends on the desired build and other site-specific factors.

In UNICARB® finishes, the faster solvents are replaced with supercritical CO_2. Since the faster solvents are no longer present, drying time may increase. The increase in drying time required, if any, depends on the exact finish formulation and site-specific conditions.

3.2.2.7 VOC Control® Finishes. The VOC Control® finishing system is being used by more than ten wood furniture manufacturing facilities. Akzo's Nobel's VOC Control® finishing system is currently being used in both high- and low-end furniture manufacturing operations. According to the Akzo Nobel Coatings representative, the use of the VOC Control® system by the wood furniture industry is growing rapidly.[94]

Because the VOC Control® finishes are higher solids finishes than their conventional counterparts, use of the system can eliminate finishing steps. Therefore, the system offers the most advantages to an operation that currently applies several lacquer coats, because some of the applications can be eliminated. Conversely, the system would not be as adaptable to an operation that had a limited number of finishing steps because elimination of finishing steps may not be practical.[94]

According to the Akzo Nobel Coatings representative, due to the high solids content of the VOC Control® finishes, drying time may increase in some instances.[94] Any potential increase in drying time would depend on the site-specific conditions and the exact finish formulation.

3.2.3 Advantages and Disadvantages of Lower VOC Finishes

Each type of coating discussed in this chapter has advantages and disadvantages associated with its use. Based on a survey of wood furniture finish suppliers, Table 3-1 presents a comparison of the suppliers' opinions concerning the properties of each finish type.[82-88] The information provided includes the finish properties only. The ranking of finish properties in Table 3-1 reflects the opinions of finish suppliers and probably represents desirable qualities from the standpoint of finish suppliers and wood furniture manufacturers. The importance of the various qualities to a consumer may be different.

As indicated in Table 3-1, finish suppliers feel that advantages of nitrocellulose finishes, conventional as well as higher solids, include the appearance of the finish, the ease of application and drying of the finish, and the ability to remove the finish and thus repair deficiencies in the near-finished product. According to the survey respondents, a disadvantage of the nitrocellulose finish is its durability, which is not as good as other types of finish materials.

The nitrocellulose UNICARB® finishes offer the same advantages and disadvantages. An additional disadvantage that may be associated with UNICARB® finishes is an increase in the amount of drying time required. However, any potential increase in drying time may be offset by eliminating a finishing step. There may be a disadvantage associated with the UNICARB® system because at present, only one manufacturer makes the application system for the wood furniture industry, and only two finish manufacturers are presently formulating UNICARB® finishes for the wood furniture industry.

According to survey respondents, advantages of the waterborne finishes include their resistance to yellowing and to

TABLE 3-1. LOWER-VOC FINISH ALTERNATIVES--
FINISH SUPPLIERS' COMPARISON OF FINISH PROPERTIES[82-88]

Properties	Type of coating[a]						
	Nitrocellulose	Waterborne	UV-cured	Catalyzed	Polyester	Polyurethane	UNICARB®
• Workability	3	2	2	2	1	1	2
• Clarity of finish	3	2	3	2	3	3	3
• Resistance to extreme temperatures	2	3	3	2	3	3	3
• Durability	2	2	3	3	3	3	3
• Build	2	2	3	3	3	2	3
• Mechanical resistance	2	2	3	2	3	3	2
• Chemical resistance	1	2	3	3	3	3	2
• Resistance to yellowing	2	3	2	2	2	2	2
• Spot repair	3	2	1	2	1	1	3
• Ability to rewet	3	2	1	1	1	1	3
• Ability to wash off	3	2	1	1	1	1	3
• Stacking	2	2	3	3	2	2	2
• Application by spray equipment	3	2	2	3	2	3	N/A
• Application by curtain coater	2	1	3	2	2	2	N/A
• Application by roll coat	3	2	3	2	1	2	N/A
• Ambient cure	3	2	1	2	1	2	3
• Cure (140°F)	3	2	1	3	3	2	3
• Use on case goods	3	2	1	3	2	2	3

For each property, finish suppliers indicated the performance of each lower VOC finish as: 1-poor; 2-satisfactory; or 3-good.
[a]Information on Akzo Nobel's VOC Control® finishing system was not requested on the surveys.

extreme temperatures. Also, the waterborne finishes are satisfactory in terms of the finish quality, finish application and cure, and the ability to wash off/repair. A disadvantage of the waterborne finishes is the difficulty in applying them using a fan or curtain coater, due to their inability to hold together well. Waterborne finishes are more susceptible to breaks in the fan or curtain. According to one finish supplier, adding surfactants may minimize or eliminate this problem.[82] Another disadvantage that may be associated with waterborne finishes is the requirement for increased drying capacity, and the potential for grain raising.

As indicated in Table 3-1, the main advantages of the UV-curable finishes are their durability, their ability to be applied by several methods, and their resistance to chemicals, temperature, and yellowing. Disadvantages of these finishes to the wood furniture manufacturer include their inability to wash off/repair, the curing difficulties that may be associated with the finish, and the limited experience of the manufacturers with the use of the finishes on case goods.

The advantages and disadvantages of the urea or melamine catalyzed, polyester, and polyurethane finishes are similar to those of the UV-curable finishes. However, the urea and melamine catalyzed, polyester, and polyurethane finishes offer additional advantages in that they are satisfactory for use on case goods and are more easily cured. Disadvantages of polyester and polyurethane finishes to the furniture manufacturer include their being difficult to work with and repair, the requirement for a clean room environment, and the potential need for increased worker protection.

3.3 EMERGING/SPECIALIZED TECHNOLOGIES

Several technologies currently in the developmental stages could potentially apply to the wood furniture industry. These technologies are in the areas of spray booth design, curing methods, and add-on control devices. The spray booth design discussed in this section is the Mobile Zone design, which reduces the volume of air exhausted. The curing method discussed

in this section is three-dimensional UV curing. Developments in this area would facilitate the use of UV-curable finishes on case goods. Finally, biofiltration, an add-on control technology that is used in other countries for both odor and VOC control, is discussed.

3.3.1 Mobile Zone Spray Booth[62,106,107]

Mobile Zone Associates has developed a device which, when installed on a spray booth, enables the worker(s) to spray finishes from a partially enclosed mobile work platform. The worker stands inside a moving "cab," the movement of which is controlled from inside the cab by the worker. Within the Mobile Zone cab, fresh ventilating air passes across the painter from an open "moving window" at his or her rear. The remaining section of the mobile work platform is ventilated using recirculated air. The Mobile Zone design contrasts with a conventional spray booth, in which the entire length of the booth is supplied with fresh ventilating air. Through the use of the moving window, the ventilating air requirements for the worker are greatly reduced. The fresh makeup air requirements of the mobile zone are equal to the flow through the window, greatly reduced compared to conventional booths. The reduction in makeup air requirements would reduce heating and cooling costs, as well as capital and operating costs of an add-on control device.

The Mobile Zone system was tested in a commercial job shop finishing operation that uses solvent-thinned paint. The testing involved finishing flat panels. The facility's conventional spray booth was modified by the addition of the Mobile Zone. Design, fabrication, and installation of the mobile zone was conducted under an EPA Small Business Innovation Research (SBIR) grant. The testing program indicated that the Mobile Zone allowed the company to reduce the spray booth exhaust flow rate by 90 percent.

The Mobile Zone is considered an emerging technology for several reasons. The Mobile Zone system was used commercially for a short time by a metal working operation that has since ceased finishing operations. As of February 1995, the system is

not presently being used anywhere commercially. Finally, the Mobile Zone is considered an emerging technology for the wood furniture industry because testing thus far has occurred on a overhead conveyor line; most furniture manufacturers employ pallet lines, which run along the ground. Mobile Zone Associates indicated that it thought the system could be used on a pallet line. However, this may not be the best application for the system.

3.3.2 Three-Dimensional Ultraviolet Curing

Ultraviolet-curable finishes are frequently used by flat line furniture finish operations. The pieces are flat, so curing in a conventional UV-cure oven is straightforward. Although UV-curable finishes are also applied to case goods (nonflat pieces), the UV curing process with such pieces is much more difficult. In order for a UV-curable finish to cure, all finish must be exposed to the UV light. The lamps in the UV oven must be situated to ensure exposure to all areas of the case goods, including recessed areas, carvings, etc. The UV lamp locations would need to be set for each type of case good depending on its configuration. Because furniture manufacturers typically produce many different types of case goods on a single line at any time, realignment of the UV lamps for each situation on such a line is not feasible. However, if a manufacturer produced a single piece continuously for a length of time, the lamps could be arranged for that configuration. Then another type of piece could be produced for a length of time, after the lamps were adjusted.

Some three-dimensional UV ovens have been designed for specialized applications. Typically, these applications involve the consistent finishing of one type of piece (i.e., one chair design). In such applications, the UV lamp configuration does not require realignment with the introduction of each piece. For the majority of case goods finishing operations, however, three-dimensional UV curing is considered an emerging technology. Finish suppliers, oven manufacturers, and furniture manufacturers continue to conduct research in this area.

3.3.3 Biofiltration[108-111]

Biofiltration is a control technology in which contaminated exhaust air is sent through a biofilter for contaminant removal. The biofilter consists of organic matter, such as tree bark and compost, the pores of which are filled with water. In the water phase, biologically active micro-organisms are present, partly free-floating in the water and partly attached to the organic matter.

The mechanism of the biochemical process consists of a combination of adsorption, absorption, and biological degradation. As the exhaust air travels through the biofilter, pollutant removal from the gas phase occurs in two ways. By Van der Waals forces, some pollutant molecules in the waste air are adsorbed by the organic matter. Some of these molecules transfer from the gas phase to the water phase by means of absorption. To maintain the adsorption and absorption capacity of the biofilter, the activity of the aerobic micro-organisms is necessary. The micro-organisms oxidize the contaminants to water, CO_2 and, depending on the contents of the exhaust stream, NO_x and SO_x. The micro-organisms are sustained by the addition of moisture, oxygen, and nutrients in the exhaust stream. The used nutrients are recycled; once the micro-organisms die, the living micro-organisms consume them to obtain the nutrients. Eventually, however, the filter material is exhausted. In normal operations, the biofilter beds usually last between 2 and 5 years. When the bed is spent, it can be disposed of readily, e.g., used in agricultural applications.

The micro-organisms used in a biofilter are specific to the type(s) of pollutants being controlled. The temperature and humidity of the biofilter must be precisely maintained to protect the micro-organisms and thus ensure proper pollutant removal. If multiple pollutants are present in the exhaust stream, several biofilters with varying micro-organisms may be required. It is difficult to maintain a single biofilter with multiple micro-organisms, since the temperature and humidity requirements of the different micro-organisms may differ. These pollutant-specific

requirements make biofilters best suited to applications with consistent exhaust streams with relatively few types of pollutants. The exhaust streams from wood furniture finish operations vary in volume and concentration and contain a wide variety of pollutants.

Biofiltration is a proven odor-control technology that has long been used in sewage treatment facilities and other industrial processes. Biofilters are typically used to control small-volume exhaust streams. Odor-control efficiencies of 95 percent and greater have been reported for biofiltration units. In some installations, the odors being controlled are caused by the presence of VOC's in the exhaust stream. Therefore, the biofiltration technology could be expected to control VOC's as well as odor. However, data concerning the VOC control efficiency of biofilters are only now becoming available. The relationship between odor and/or VOC control efficiency and pollutant concentration may not be linear. Therefore, conclusions regarding VOC control efficiency await closer review of data now becoming available from foreign installations.

Biofilters have been developed by Bio Clean AB of Sweden and introduced for use in the U.S. by Ahlquist & Munters Technologies, Inc. The Bio Clean filters have been in commercial use in Sweden since 1989 for applications such as odor removal from wastewater facilities and slaughterhouses and VOC removal from paint manufacturing, various painting operations, and fiberglass boat manufacturing. Their filters can achieve VOC removal efficiencies of better than 95 percent.

Biofiltration is considered an emerging technology for controlling VOC emissions from wood furniture finishing operations. Biofilters are recommended for small-volume exhaust streams with consistent concentrations of a few types of compounds. Exhaust streams from furniture manufacturers are characterized as large-volume exhaust streams containing a wide variety of VOC's of varying concentrations. The large volume exhaust would require very large biofilters, and the space requirements could be substantial. The wide variety of VOC's may

require multiple beds with different micro-organisms. Each bed would have to be maintained at slightly different conditions. Another factor that could hamper the use of biofiltration in the wood furniture industry at this time is the limited VOC control efficiency data that is currently available.

3.4 MINIMIZATION OF FINISH/SOLVENT USAGE AND EVAPORATION

Volatile organic compound emissions can also be reduced by minimizing the opportunity for evaporation of finishing and cleaning materials as well as by minimizing the use of these materials. A variety of work practices, designed to minimize the use and evaporation of finishing and solvent materials, are required by presumptive RACT, and these requirements are discussed in Section 3.4.1. Additional work practices that could be used to further reduce VOC emissions from finishing and cleaning operations, but are not required by presumptive RACT, are discussed in Section 3.4.2.

3.4.1 Required Work Practices

The work practices that are required as part of presumptive RACT are summarized in Table 3-2. The practices listed in this table must be followed by all facilities subject to RACT. These requirements are discussed in the following sections.

3.4.1.1 General requirements for finishing, Cleaning, and Washoff.

VOC Storage. Materials containing VOC are often stored in containers that are left open, allowing the volatiles to evaporate and be emitted through room ventilation to the atmosphere. The Work Practice Group agreed that a straightforward, inexpensive method of reducing emissions from VOC storage would be to cover all containers storing finishing, cleaning, and washoff materials when not in use.

VOC Transfer. In wood furniture plants, finishing, cleaning, and washoff materials are pumped from storage containers to spray guns through piping. Because leaks are likely to occur whenever materials are transferred, the Work Group agreed that requiring sources to check this equipment for

TABLE 3-2. WORK PRACTICE REQUIREMENTS -- PRESUMPTIVE RACT

A. Finishing, Cleaning, and Washoff
- Covered storage of finishing, cleaning, and washoff materials.
- Inspection and maintenance program must be developed and implemented to minimize leaks (monthly inspection frequency, repairs within 15 days).
- Conventional air spray guns prohibited in most circumstances.

B. Cleaning and Washoff Operations

Gun/line cleaning
- Cleaning solvent must be collected in a container that can be closed.
- Cleaning solvent containers must be closed when not in use.

Spray booth cleaning
- Use of organic solvents for spray booth cleaning is prohibited except in limited circumstances (conveyors that carry pieces through booth and continuous coaters and their enclosures can continue to be cleaned with solvent, as can the metal filters in spray booths, 1.0 gallon per booth limit to clean stained areas when replacing strippable spray booth coating).

Furniture washoff
- Cover washoff tanks when not in use.
- Minimize dripping by tilting and/or rotating piece.

General cleaning/washoff activities
- Cleaning and washoff accounting system
  - — Log of quantity and type of solvent used for washoff and cleaning, the number of pieces washed off, and reason for washoff.
  - — Record quantity of spent solvent generated from each activity and its ultimate fate.
  - — Calculate net cleaning and washoff solvent usage quantities, accounting for disposal and recycling of spent solvent, monthly.

C. General Work Practice Requirements
- Operator training program (train new employees upon hiring and retain all employees annually)
- Implementation Plan must be developed and maintained to demonstrate compliance with work practice requirements.

leaks was reasonable. To implement the leak inspection program, sources will be required to develop and implement an Inspection and Maintenance plan that requires the inspection of each piece of equipment used to transfer or apply finishing materials and solvents; a schedule for inspection; reporting of the inspection results and any repairs that were made to the equipment, and the timeframe between identifying the leak and performing repairs.

The Work Practice Work Group agreed upon the concept of an Inspection and Maintenance plan, but never discussed what the inspection frequency or repair response time should be. The Agency decided that a monthly inspection frequency is appropriate to accomplish the goal of reducing leaks from transfer and application equipment. To ensure that action would be taken if leaks were detected, repairs must be made within 15 calendar days, with a first attempt at repair made within 5 calendar days.

Improved Finishing Material Application Methods. The most common method of applying finishing materials in the wood furniture industry is through the use of spray guns. Spraying of finishes can be very wasteful. The amount of finish wasted can be sizable. In some industries, tests have shown that 80 percent or more of the finish directed at a substrate is wasted and becomes a solid waste expense due to disposal costs. In certain applications, some spray guns can be more efficient than others in that the quantity of finishing material lost as overspray is less. The amount of finishing material that is saved through use of improved application techniques varies considerably by facility and application. Differences in the shape of the piece being finished, airflow rates, line speed, and operator technique translate into differences in the amount of overspray. In recent years, the concept of transfer efficiency (the amount of finish that ends up on the piece, as a percentage of the total finish used) has been formally recognized and studied at great length.

The regulatory negotiation committee agreed that highly efficient transfer methods are desirable, but also agreed that the data supporting one type of application equipment over another were conflicting except in one instance; almost all data

suggest that conventional air guns are the least efficient transfer method. Therefore, presumptive RACT prohibits the use of conventional air spray guns in most instances.

The VOC emission reduction achieved through improved application techniques is difficult to quantify. A study performed by Pacific Northwest Pollution Prevention Research Center indicated that transfer efficiency is a function of both operator experience and the type of gun (among other factors).[112] Based on this study, it was arbitrarily estimated that alternative application techniques reduce finish usage, and thereby emissions, by approximately 10 percent. The company has economic motivation (although there is limited evidence that it has influenced industry in the past) for maximizing transfer efficiency. Costs associated with finishing material purchases, filter media disposal, and other waste disposal would decrease if improved application techniques were used.[113] The high costs of toxic waste disposal may ultimately provide the incentive for change.

3.4.2 Reduction in Cleaning Material Usage

As discussed in Chapter 2, industrial solvents are currently used in the wood furniture industry for equipment cleaning, and to a lesser extent, spot repair, rewetting, and dilution of finish materials. Some VOC-containing cleaners will most likely still be used for equipment cleaning even in facilities that switch to lower-VOC finishing materials. There are a number of options available to reduce the VOC emissions from cleaning material usage in the wood furniture industry. These include work practice modifications, use of alternative cleaning materials, and add-on capture and control devices. Each of these options is discussed in the following paragraphs.

3.4.2.1 Work Practice/Administrative Modifications. From an industry perspective, the lowest-impact approach to reducing VOC emissions resulting from cleaning material use is to change work practices to minimize the opportunities for emissions. No change in solvents is involved, so no compromise in cleaning efficacy is required. Emissions of VOC from cleaning materials

can be limited by restricting the movement of air across containers of solvent and by limiting the amount of solvent that is intentionally exposed to air. Thus, the use of training and safety programs to inform employees of the dangers and ecological risks and to teach good work practices are required. In addition, closed containers with soft-gasketed, spring-loaded closures for storing, transporting, and dispensing cleaning materials are essential. Containers of cleaning materials saturated with cleaning materials (rags, towels, etc.) must be closed tightly so that the solvent does not evaporate. In turn, these materials must be disposed of in a way that does not result in evaporation of the solvents (e.g., incineration). To further reduce VOC emissions, small parts must be cleaned in a closed device to minimize evaporation. Products are on the market that are specifically designed to clean spray guns without the need for spraying the solvent into the air (see Table 3-3).[114-117] One of these units, the Gun Washer/Recycler, made by Herkules Equipment Corporation, involves internal and external cleaning of the gun in an enclosed vessel. External cleaning is accomplished by soaking the gun in the solvent; internal cleaning is accomplished inside the enclosed vessel by pumping solvent through the gun. The cleaning solvent collects in the vessel, the solids are allowed to settle out, and the solvent is then reused. The Solvent Manager, made by Solvent Management, and the Lighthall unit, developed by Lighthall Enterprises, allow just the cleaning solvent resulting from internal cleaning of the gun to be captured in a removal cap as opposed to being sprayed into the air. The captured solvent can then be reused.

Another approach to changing work practices to limit cleaning material VOC emissions is an administrative control used successfully in the fiberglass-reinforced plastic industry.[117] In accordance with the administrative control, a limited amount of cleaning material is issued to each worker during a shift. This automatically limits the total solvent consumption but also requires each worker to carefully monitor solvent use so that the

TABLE 3-3. COMMERCIALLY AVAILABLE SPRAY GUN WASHING UNITS[114-117]

Model	Manufacturer
GW/R (Gun Washer Recycler)	Herkules Equipment Corporation 8320 Goldie Street Walled Lake, MI 48088-1298
The Solvent Manager	Solvent Management 15 Normanhurst Avenue Bournemouth BH8 9NN U.K.
The Lighthall	Lighthall Enterprises 934 Bay Street Santa Cruz, CA 95060

required cleaning is accomplished without impairing product quality.

Another method of changing work practices to limit solvent VOC emissions is the use of a recordkeeping system to help management track the use of solvent within a plant and ensure that used solvents are properly tracked to disposal.

3.4.2.2 Use of Alternative Cleaning Materials.[118-120] A second approach to reducing VOC emissions resulting from cleaning operations is to use cleaning materials that have been reformulated to minimize or eliminate the solvent content. The VOC emissions may also be reduced if less volatile solvents are used in lieu of the highly volatile materials used in the lacquer thinners. Because the reformulated cleaning material is no longer the same solvent that is contained in the finishes, the reformulation approach may have the disadvantage of requiring some process changes to eliminate risks of cross contamination of the cleaning material with the finish material. However, this approach has an advantage in that no additional work practice modifications need be incorporated to prevent evaporation. Volatile organic compound emissions are inherently reduced if the cleaning material has a lower VOC content because a high-boiling-point (low-volatility) solvent that is exposed to air movement will evaporate very little. A "slow-drying" solvent of this type

will eventually evaporate when exposed to the air, as, for example, when a thin film is left on a wiped surface. But casual activities, such as pouring or agitating the surface of a wash basin of solvent, will not result in a high evaporation rate. The use of reformulated solvents for gun cleaning would also result in lower emissions than those resulting from use of the finish solvent, as long as the used solvent is collected and contained. However, use of a "slow-drying" solvent for gun cleaning may necessitate the use of a hot airstream that is directed through the gun for quicker drying. Table 3-4 summarizes some low-volatility alternative solvents that have only recently been widely marketed.

TABLE 3-4. LOW-VOLATILITY ALTERNATIVE SOLVENTS[118-120]

Compound	Boiling point, °C	Manufacturer	Remarks
n-Methyl-2-pyrrolidone	202	GAF Arco Chemical	Low-toxicity replacement for methylene chloride for cleaning, stripping, and degreasing
Dibasic ester	N/A	DuPont	Substitute for acetone for polyester resin cleanup
ShipShape™	N/A	GAF	Substitute for acetone for polyester resin cleanup
Propylene glycol ethers	120-242	Arco Chemical	Solvents for waterborne and high-solids coatings

N/A = exact information not available

Another type of alternative cleaning material is an aqueous, detergent-type cleaner, which would result in very little VOC emissions. This type of cleaner is chemically incompatible with the solventborne finishing systems currently used. Thus, there is the risk of cross contamination during activities such as gun or paint-line cleaning. However, such a material may be plausible for gun cleaning, in conjunction with drying of the internal mechanisms of the gun, by using a hot airstream to eliminate residual cleaning materials. Also, there may be

opportunities in general cleaning operations where such aqueous materials could be substituted. Solvent cleaners are often used more as a matter of convenience (because of availability) than because of any rigid efficacy requirements in general cleaning situations.

These aqueous detergent-type cleaners may be compatible with waterborne finish systems that are being developed in response to more stringent regulations. A related alternative general cleaning process is the use of high-pressure water (water blasting) to remove cured or partially cured finishes from equipment. The mechanism of cleaning is by abrasion, rather than by chemical interaction, so that the technique would be limited to spray booths and related application equipment.

3.4.2.3 Add-On Control Devices. A third approach to reducing VOC emissions from cleaning operations is the use of add-on controls, which first capture airborne VOC and then recover or destroy it. In some large operations this approach may be feasible if cleaning operations were conducted in a central location. In this case, the proper hoods and ventilation systems could be installed to capture the vapors and route them to a control device. Similarly, if the finishing line itself has emission control devices installed, it may be possible to conduct cleaning operations in the finishing booths with the ventilation systems operating, so that vapors from cleaning could be handled by the same control devices that normally handle the finishing emissions.

3.4.3 Washoff Operations

Washoff is the practice of removing coating from a piece of furniture. The main reason for washoff is because the finish does not meet company specifications. By washing off the finishes, the substrate can be refinished. Washoff is typically accomplished by dipping the furniture into a tank containing organic solvent; the same solvents used for cleaning are usually used for washoff.

To minimize the VOC emissions resulting from washoff operations, the Work Practice Work Group decided on several

required work practices. As with finishing and other cleaning operations, the work group agreed that covering washoff tanks when they are not in use would limit emissions. Also, sources can minimize dripping by tilting and/or rotating the piece to drain as much solvent as possible.

In general, cleaning and washoff practices are not well documented by sources. For example, most sources do not know the quantity of solvent used for cleaning and washoff operations, how many pieces are washed off, and the fate of spent solvent from cleaning and washoff operations. The Work Practice Work Group agreed that one of the first steps in reducing emissions is to know the quantity of solvent used for the various operations, and therefore presumptive RACT requires all facilities subject to RACT to implement a cleaning and washoff solvent accounting system. Such an accounting system will minimize solvent usage and will enable a facility to analyze their number of pieces washed off to improve their operation. Under the cleaning and washoff solvent accounting system, sources have to (1) maintain a log of the quantity and type of solvent used for washoff and cleaning, the number of pieces washed off, and the reason for the washoff; and (2) record the quantity of spent solvent generated from each activity. The net cleaning and washoff solvent usage quantities, accounting for disposal and recycling of spent solvent, must be calculated monthly, and copies of the logs must be made available upon request.

The Work Practice Work Group and the regulatory negotiation committee as a whole agreed that an accounting system should be required. The Committee believed that the accounting system would be an important first step for facilities to develop a broad-based, multimedia pollution prevention plan.

The Committee believed that once the accounting system is in place, the burden of maintaining it would not be too great. Although implementation of a cleaning and washoff solvent accounting system is expected to reduce VOC emissions, the expected reduction in emissions has not been quantified, nor has the associated cost.

3.5 REFERENCES FOR CHAPTER 3

1. Bethea, R. M. Air Pollution Control Technology. New York, Van Nostrand Reinhold Company. 1978. p. 395.

2. Brunner, C. R. Hazardous Air Emissions from Incineration. New York, Chapman and Hall. 1985. p. 92.

3. Ref. 1, pp. 401-402.

4. Ref. 1, p. 405.

5. Prudent Practices for Disposal of Chemicals from Laboratories. National Academy Press. Washington, D.C. 1983.

6. Seiwert, J.J. Regenerative Thermal Oxidation for VOC Control. Smith Engineering Company. Duarte, CA. Presented at Wood Finishing Seminar--Improving Quality and Meeting Compliance Regulations. Sponsored by Key Wood and Wood Products and Michigan State University. Grand Rapids. March 5, 1991. 27 pp.

7. Memorandum and attachments from Farmer, J. R., EPA, to Distribution. Thermal Incinerator Performance for NSPS. August 22, 1980. 29 pp.

8. Radian Corporation. Catalytic Incineration for Control of VOC Emissions. Park Ridge, NJ, Noyes Publications. 1985. pp. 4-5.

9. Ref. 1, p. 421.

10. Ref. 7, pp. 12-24.

11. Ref. 1, p. 425.

12. Telecon. Caldwell, M. J., Midwest Research Institute, with Minor, J., M & W Industries. June 20, 1991. Catalytic incineration.

13. Survey response and attachments from Smith Engineering Company to Wyatt, S., EPA/ESD. May 16 and June 21, 1991. Response and follow-on information pertaining to add-on control survey.

14. Telecon. Caldwell, M.J., Midwest Research Institute, with McIlwee, R., Smith Engineering Company. June 25, 1991. Clarification of information provided in add-on survey response.

15. Telecon. Caldwell, M.J., Midwest Research Institute, with McIlwee, R., Smith Engineering Company. August 13, 1991. Destruction efficiency of thermal incineration systems.

16. Survey response and attachments from M&W Industries, Inc., to Wyatt, S., EPA/ESD. June 13, 1991. Response to add-on control survey.

17. Telecon. Caldwell, M.J., Midwest Research Institute, with Minor, J., M&W Industries, Inc. June 20, 1991. Clarification of information provided in add-on survey response.

18. Survey response and attachments from Met Pro Corporation to Wyatt, S., EPA/ESD. May 13, 1991. Response and follow-on information pertaining to add-on control survey.

19. Telecon. Caldwell, M.J., Midwest Research Institute, with Kenson, Dr. R., Met Pro Corporation. June 17, 1991. Clarification of information provided in add-on survey response.

20. Ref. 1, pp. 375-376.

21. Ref. 1, p. 366

22. Calgon Corporation. Introduction to Vapor Phase Adsorption Using Granular Activated Carbon. pp. 11-1 through 11-16.

23. Ref. 1, pp. 382-387.

24. Ref. 5, pp. 4-1 through 4-44.

25. Ref. 1, pp. 380-382.

26. Crane, G. Carbon Adsorption for VOC Control. U. S. Environmental Protection Agency. Research Triangle Park, NC. January 1982. p. 23.

27. Kenson, R.E. Operating Results from KPR Systems for VOC Emission Control in Paint Spray Booths. Met-Pro Corporation. Harleysville, PA. Presented at the CCA Surface Finish '88 Seminar and Exhibition. Grand Rapids, MI. May 18, 1988. 10 pp.

28. VIC Manufacturing. Carbon Adsorption/Emission Control. Minneapolis, MN.

29. Telecon. Catlett, K., EPA/CPB, with Sengupta, P., Vara International. December 16, 1991. Control of alcohols using carbon adsorption.

30. Telecon. Beall, C., Midwest Research Institute, with Kenson, R., MetPro, Inc. January 3, 1992. Control of alcohols using carbon adsorption.

31. Telecon. Caldwell, M. J., Midwest Research Institute, with Bhushan, D., Durr Industries. June 25, 1991. Effect of alcohols and ketones on carbon adsorption performance.

32. Radian Corp. Adsorption for control of VOC emissions: Theory and full scale system performance. Prepared for U. S. Environmental Protection Agency. EPA Contract No. 68-02-4378. June 6, 1988.

33. Telecon. Caldwell, M. J., Midwest Research Institute, with Weissert, M., Calgon Carbon Corporation. June 25, 1991. Clarification of information provided in add-on survey response.

34. Telecon. Caldwell, M. J., Midwest Research Institute, with Blocki, S., ABB Flakt Alpha. June 5, 1991. Clarification of information provided in add-on survey response.

35. Calgon Carbon Corporation. CADRE VOC Control Process. Pittsburgh, PA. 1987.

36. Brochure and attachments from Jackson, T., Terr-Aqua Enviro Systems, Inc., to Catlett, K., EPA/CPB. Received February 14, 1992. Information regarding Terr-Aqua's UV-oxidation system.

37. Shugarman, L. Ultraviolet/Activated Oxygen - A New Air Pollution Control Technology Comes of Age. Terr-Aqua Enviro Systems, Inc. Fontana, California. Presented at the 84th Annual Meeting, Air and Waste Management Association, Vancouver, British Columbia. June 16-21, 1991.

38. Telecon. Caldwell, M. J., Midwest Research Institute, with Shugarmann, L., Terr-Aqua Enviro Systems, Inc. June 20, 1990. Future installation of Terr-Aqua UV-oxidation system at a furniture plant in California.

39. Telecon. Caldwell, M. J., Midwest Research Institute, with Jackson, T., Terr-Aqua Enviro Systems, Inc. November 1, 1990. Status of Terr-Aqua installation at a furniture plant.

40. Telecon. Caldwell, M. J., Midwest Research Institute, with Jackson, T., Terr-Aqua Enviro Systems, Inc. April 22, 1992. Status of Terr-Aqua installation at a furniture plant.

41. Telecon. Parker, A., Midwest Research Institute, with Jackson, T., Terr-Aqua Enviro Systems, Inc. January 31, 1995. Update on Terr-Aqua installations in the wood furniture industry.

42. Telecon. Christie, S., Midwest Research Institute, with Bodie, J., Occupational Safety and Health Administration. March 18, 1991. Recirculation.

43. Telecon. Christie, S., Midwest Research Institute, with Kanth, S., Occupational Safety and Health Administration. April 16, 1991. Recirculation.

44. Memorandum. Conray, D., EPA Region I, to Catlett, K., EPA/CPB. December 19, 1991. Review of draft CTG - "Control of Volatile Organic Compound Emissions from Wood Furniture Finish Operations."

45. Telecon. Christie, S., Midwest Research Institute, with Bombay, B., Kraftmaid Cabinetry. November 29, 1990. Recirculation.

46. Occupational Health and Environmental Control. 29 CFR 1910.94(c)(6)(i) and (ii). July 1, 1991.

47. Telecon. Christie, S., Midwest Research Institute, with Campbell, C., Classic Air Systems. June 12, 1991. Campbell Spray Booth.

48. Letter. Deal, W., and Dorris, W., Joint Industry Steering Committee, to Jordan, B., EPA/ESD. December 5, 1991. Comments of the Joint Industry Steering Committee on the NAPCTAC package and presentation.

49. Telecon. Christie, S., Midwest Research Institute, with J. Bauersox, Wood Mode, Inc. November 15-16, 1990. Clarification of survey response.

50. Letter and attachments from Shepich, T.J., OSHA, to Wyatt, S., EPA/ESD. January 16, 1990. Recirculation.

51. Telecon. Christie, S., Midwest Research Institute, with Gregory, W., BMY Corporation. February 26, 1991. Recirculation.

52. Telecon. Caldwell, M., Midwest Research Institute, with D. Bhushan, Durr Industries. November 5, 1990. Spray booth circular.

53. Telecon. Christie, S., Midwest Research Institute, with J. Minor, M&W Industries. December 20, 1990. Spray booth recirculating with add-on control systems.

54. Telecon. Christie, S., Midwest Research Institute, with Nowack, W., Industrial Technology Midwest. February 26, 1991. Description and costs of recirculating spray booths.

55. Norton, L. E., R. J. Bryan, and D. P. Becvar. (Engineering-Science, Inc.). Evaluation of a Paint Spray Booth Utilizing Air Recirculation. Prepared for the U. S. Environmental Protection Agency. Cincinnati. Publication No. EPA-600/2-84-143. August, 1984. 67 pp.

56. Ayer, J. (Acurex Corporation). Split-flow Exhaust Recirculation for the Economic Control of VOC Emissions from Paint Spray Booths. Prepared for U. S. Environmental Protection Agency. Research Triangle Park, NC. Paper No. 90-104.3 for Presentation at the 83rd Annual Meeting of Air and Waste Management Association. June 24-29, 1990. 12 pp.

57. Letter. Runyan, L., American Furniture Manufacturers Association, to Catlett, K., EPA/CPB. January 14, 1992. Response to request for information dated January 14, 1992, regarding JISC comments on preliminary draft CTG.

58. Telecon. Caldwell, M. J., Midwest Research Institute, with Taylor, R., Durr Industries, Inc. August 8, 1991. Regenerative incinerator idling and recirculating spray booths.

59. Telecon. Caldwell, M. J., Midwest Research Institute, with Miller, D., George Koch Sons, Inc. August 7, 1991. Clarification of information provided in add-on survey response.

60. Telecon. Caldwell, M.J., Midwest Research Institute, with Nowack, W., Industrial Technology Midwest. August 7, 1991. Recirculating spray booths.

61. Telecon. Beall, C., Midwest Research Institute, with Febo, F., Allendale Insurance Company. January 2 and 3, 1991. Impact of various control options on insurance premiums.

62. Mobile Zone Associates. Mobile Zone Spray Booth for Reduction of VOC Contaminated Air. Prepared for U. S. Environmental Protection Agency. Research Triangle Park, NC. Contract No. 68-D9-0122. April 12, 1990. 17 pp.

63. Memorandum from Christie, S., Midwest Research Institute, to Catlett, K., EPA/ESD. March 12, 1991. Summary of Wood Finishing Seminar-Improving Quality and Meeting Compliance Regulations. Sponsored by Wood and Wood Products and Michigan State University. 37 pp.

64. Telecon. Caldwell, M. J., Midwest Research Institute, with Ellis, T., Classic Air Systems. May 11, 1992. Status of CamBooth.

65. U. S. Environmental Protection Agency. Enabling Document. The Measurement Solution--Using a Temporary Total Enclosure for Capture Efficiency Testing. Publication No. EPA-450/4-9-020. Final Draft. August 1991.

66. Battelle and Eastern Research Group, Inc. Guide to Cleaner Technologies: Organic Coating Replacements. Prepared for U. S. Environmental Protection Agency. Cincinnati, OH. September 1994. Publication No. EPA/625/R-94/006.

67. Beels, G.J. Industrial Finishing 1991 Market Study. Industrial Finishing. December 1990. pp. 22-25.

68. SRI International. U. S. Paint Industry Data Base. Prepared for the National Paint and Finishes Association. Washington, D.C. September 1990. 227 pp.

69. Winchester, C.M. Waterborne Nitrocellulose Wood Lacquers with Lower VOC. Aqualon Company. Wilmington, DE. Presented at the Higher-Solids, Waterborne and Powder Finishes Symposium. February 6-8, 1991. 19 pp.

70. Domsey, S. Woodworker's Guide to Conventional Finishes. Furniture Design & Manufacturing. January 1988. pp. 54-57.

71. Chemcraft Sadolin International Inc. Wood Finishes. Brochure. Walkertown, NC.

72. Survey response from PPG Industries, Inc., to Farmer J., EPA/ESD. May 8, 1990. Response to Section 114 information request.

73. Survey response and attachments from Reliance Universal, Inc., Division of Akzo Finishes, to Farmer, J., EPA/ESD. May 11, 1990. Response to Section 114 information request.

74. Survey response and attachments from The Lilly Company to Farmer, J., EPA/ESD. May 14, 1990. Response to Section 114 information request.

75. Survey response and attachments from The Valspar Corporation to Farmer, J., EPA/ESD. May 10, 1990. Response to Section 114 information request.

76. Survey response and attachments from Guardsman Products, Inc., to Farmer, J., EPA/ESD. May 10, 1990. Response to Section 114 information request.

77. Memorandum. Rasor, S., Midwest Research Institute, to Wood Furniture Project File. Summary of Data from Wood Furniture Information Collection Request. October 12, 1994.

78. Brantley, M. (E-Z-Go, Division of Textron). VOC Emission Reduction Implementation. Prepared for the Society of Manufacturing Engineers. Dearborn, Michigan. Paper No. FC89-611. October 1989. pp. 4-5.

79. Ballaway, B. New Developments in Waterborne Finishes. Industrial Finishing. December 1989. pp. 24-25.

80. Detrick, G. F. and K. Kronberger. Addressing the VOC Issue in Industrial Finishes. American Paint and Finishes Journal. September 11, 1989. pp. 42-52.

81. Del Donno, T. A. Waterborne Finishes Outlook Bright. Industrial Finishing. December 1988. pp. 28-33.

82. Contact Report. Caldwell, M. J., and Christie, S., Midwest Research Institute, with Tucker, R., Guardsman Products, Inc. March 28, 1991. Lower-VOC finishes.

83. Contact Report. Caldwell, M. J., and Christie, S., Midwest Research Institute, with Reidell, A., PPG Industries. March 21, 1991. Lower-VOC finishes.

84. Survey response and attachments from Guardsman Products, Inc., to Wyatt, S., EPA/ESD. May 30, 1991. Response to finish suppliers questionnaire.

85. Survey response and attachments from the Lilly Company to Wyatt, S., EPA/ESD. June 7, 1991. Response to finish suppliers questionnaire.

86. Survey response and attachments from PPG Industries, Inc., to Wyatt, S., EPA/ESD. June 3, 1991. Response to finish suppliers questionnaire.

87. Survey response and attachments from Sadolin, Inc., to Wyatt, S., EPA/ESD. May 24, 1991. Response to finish suppliers questionnaire.

88. Survey response and attachments from the Valspar Corporation to Wyatt, S., EPA/ESD. May 29, 1991. Response to finish suppliers questionnaire.

89. Hornung, J. R. (Southern California Edison Company). Test Results of Rule 1136 Coatings Project. Prepared for South Coast Air Quality Management District. December 1993. 78 pp.

90. Letter. Fujimoto, K., Consultant, to J. Berry, EPA/ESD. June 14, 1994. Results of Method Analysis.

91. Telecon. Christie, S., Midwest Research Institute, with Tucker R., Guardsman Products Inc. May 10, 1991. Catalyzed finishes.

92. Schmidt, H. UV Curing for Flatline and 3-D Production. Superfici U.S. Kennersville, NC. Presented at the Wood Finishing Seminar. Grand Rapids, MI. March 5, 1991. 18 pp.

93. Bean, J. E. Finishing Handbook. London, Sawell Publications. 1988. p. 172.

94. Telecon. Caldwell, M., Midwest Research Institute, with G. Currier, Akzo Finishes, Inc. October 19, 1994. Akzo's "VOC Control" Systems.

95. Letter and attachments from Rechel, C. J., RadTech International, to Edwardson, J. A. and J. Berry, EPA/ESB. October 13, 1993. Potential for reduction of emissions by the use of UV curable finishing systems.

96. Loewenstein Dip Continues. Industrial Finishing. 69:14-15. May 1993.

97. Telecon. Beall, C., Midwest Research Institute, with O'Block, S., Miles, Inc. January 22, 1992. Toxicity and safe handling of isocyanates.

98. Mobay Corporation. Hexamethylene Diisocyanate Based Polyisocyanates - Health and Safety Information. Pittsburgh, PA. February 1991. 13 pp.

99. Telecon. Beall, C., Midwest Research Institute, with O'Block, S., Miles, Inc. January 24, 1992. The toxicity of the components in polyurethane finishes.

100. Mobay Corporation. Some Plain Talk About Safe Use of Polyurethane Finishes. Pittsburgh, PA. 4 pp.

101. Mobay Corporation. Isocyanates-Questions and Answers About Use and Handling. Pittsburgh, PA. August 1991. 26 pp.

102. Mobay Corporation. Polyurethane Finishes--Performance, Quality, Safety. Pittsburgh, PA. 1989. 12 pp.

103. Heater, K. J., A. B. Parsons, and R. F. Olfenbuttel (Battelle Memorial Incorporated). Project Summary: Evaluation of Supercritical Carbon Dioxide Technology to Reduce Solvent in Spray Coating Applications. Prepared for U. S. Environmental Protection Agency, Washington, DC Publication No. EPA/600/SR-94/043. May 1994. 3 pp.

104. Telecon. Caldwell, M. J., Midwest Research Institute, with Morgan, R., Union Carbide. April 23, 1992. Status of UNICARB® installations.

105. Telecon. Caldwell, M., Midwest Research Institute, with T. West, Union Carbide. October 24, 1994. Status of UNICARB® in the Wood Furniture Industry.

106. Letter and attachments from Putsche, V., ENSR, to Christie, S., Midwest Research Institute. April 18, 1991. Mobile Zone.

107. Telecon. Parker, A., Midwest Research Institute, with W. Brown, Mobile Zone Associates, February 13, 1995. Status of commercial installations for Mobile Zone System.

108. K. I. Lipton, Inc. Marketing Communication. Gist-Brocades Yeast Plant Applies Biotechnology to Solve East Brunswick Odor Problem. Doylestown, PA.

109. Product Information. Ahlquist & Munters Technologies, Inc. Undated. Discussing biofilters and commercial installations.

110. Paul, P. G. New Developments in Biofiltration. Comprimo Corporation. Presented at the 22nd ACHEMA Exhibition--Congress. Frankfurt. June 5-11, 1988. 8 pp.

111. Leson, G. Biofiltration: An Innovative Air Pollution Control Technology for VOC Emissions. Journal of the Air and Waste Management Association. 41:1045-1054. August 1991.

112. Schecter, R. N., and G. Hunt. Case Summaries of Waste Reduction by Industries in the Southeast. July 1989. p. 11.

113. Transfer Efficiency and VOC Emissions of Spray Gun and Coating Technologies in Wood Finishing. Pacific Northwest Pollution Prevention Research Center. Seattle, WA. 1992.

114. Herkules Equipment Corporation, product brochure. Gun Washer and Recycler. Form GWR-1086. Canada.

115. SRC, product brochure. The Solvent Manager. Document SM/002.

116. Lighthall Enterprises, product brochure. The Lighthall. Santa Cruz, CA. October 1987.

117. Memorandum from Vaught, C., Midwest Research Institute, to Evans, L., EPA. July 23, 1990. Industrial uses of cleanup materials--Industry uses investigation.

118. Arco Chemical, product brochure. NMP data sheet. Newtown Square, PA. 1990.

119. GAF advertisement. Industrial Finishing, p. 44. November 1990.

120. DuPont, product brochure. High-boiling-point solvents.

4.0 MODEL PLANTS AND EMISSIONS ESTIMATES

This chapter describes the model plants selected to characterize the wood furniture industry, the corresponding emissions estimates, and the methodology used to determine these estimates. The model plants describe finishing operations and are intended to be representative of existing facilities. The majority of the existing facilities have no VOC controls on their finishing operations; therefore, model plants represent uncontrolled finishing operations. The model plants have been developed to represent the wood furniture industry as a whole; they do not necessarily represent every possible facility. The model plants will be used to evaluate the environmental, cost, economic, and energy impacts of control options on the affected sources.

This chapter describes the model plants in detail, and presents the methodology used to estimate model plant emissions. Model plants are described in Section 4.1; overall categories, finish application methods, finishing sequence, model plant sizes, finish usage, and finishing parameters are discussed. Emissions estimates are described in Section 4.2, and a list of references is provided in Section 4.3.

4.1 MODEL PLANTS

Development of the model plants has been based primarily on information from a study sponsored by the wood furniture industry and data collected from responses to the Agency's information collection requests (ICR's).[1,2] The wood furniture industry's study evaluates VOC control technologies applicable to wood furniture finishing and estimates the costs of these controls. The ICR's were sent by the Agency to wood furniture manufacturers

in all segments of the industry. There are several key parameters that must be considered in order to conceptualize the models to be used. The type of finish application method, the finishing sequence, and the size of the model plant are of primary importance.

Seventeen model plants have been developed to characterize wood finishing operations. The model plants are divided into five main categories: short spray finishing sequence; long spray finishing sequence; roll, curtain, and dip coating (referred to as roll); upholstered furniture manufacturing; and kitchen cabinet manufacturing. These categories are classified by general finishing application technique; of the five categories, four use spray application methods and one uses flatline finishing application (roll, curtain, and dip coating). Spray application finishing is further classified as either short spray or long spray finishing sequences. Three of the categories, short spray finishing sequence, long spray finishing sequence, and roll, curtain, and dip finishing sequence, represent plants in multiple market segments or SIC codes. Two of the categories, manufacturing of upholstered furniture and kitchen cabinets, are short spray sequences that are each specific to one single industry or SIC code. Table 4-1 identifies the SIC codes represented in each of the five main categories.

Each of the categories is further divided by size on the basis of finish usage (extra small, small, medium, and large), except the category representing manufacturers of upholstered furniture. These facilities are typically small in terms of the amount of finish used.

The seventeen model plants that were developed based on the five categories are described in Table 4-2. Finish application method, finishing sequence, and plant size are identified. This table also identifies other important model plant characteristics such as the number of finishing steps, the number of spray booths per finishing line, the type of topcoats used, and the number of finishing lines for each model plant. The following sections

TABLE 4-1. CHARACTERISTICS OF MODEL PLANT CATEGORIES

Model plant category	Model plant No.	SIC codes/ furniture type
Short	1a	2511-Residential Furniture 2519-Furniture, n.e.c. 2521-Office Furniture 2531-Public Building Furniture 2541-Store Fixtures
	1	
	2	
	3	
Long	4a	2511-Residential Furniture 2517-Radio, Television Cabinets 2519-Furniture, n.e.c. 2521-Office Furniture 2531-Public Building Furniture
	4	
	5	
	6	
Roll	7a	2434-Kitchen Cabinets 2517-Radio, Television Cabinets 2521-Office Furniture 2531-Public Building Furniture 2541-Store Fixtures
	7	
	8	
	9	
Upholstered furniture	10	2512-Upholstered
Kitchen cabinets	11a	2434-Kitchen Cabinets
	11	
	12	
	13	

TABLE 4-2. MODEL PLANT DESCRIPTIONS

	Short spray sequence				Long spray sequence				Roll coating				Upholstered furniture	Kitchen cabinet			
Plant No.	1a	1	2	3	4a	4	5	6	7a	7	8	9	10	11a	11	12	13
Application method: S-spray, R-roll	S	S	S	S	S	S	S	S	R	R	R	R	S	S	S	S	S
Spray sequence: S-short, L-long	S	S	S	S	L	L	L	L	NA	NA	NA	NA	S	S	S	S	S
Size	xsmall	small	med	large	xsmall	small	med	large	xsmall	small	med	large	small	xsmall	small	med	large
No. of finishing steps	4	4	4	4	7	7	7	7	3	3	3	3	4	3	3	3	3
No. of finishing lines	1	1	2	2	1	1	2	2	1	1	2	2	1	1	1	2	2
No. of spray booths per finishing line	4	4	4	4	7	7	10	10	NA	NA	NA	NA	4	3	3	3	3
Number of topcoat steps	1	1	1	1	3	3	3	3	1	1	1	1	1	1	1	1	1
Finish usage, gal	13,000	25,000	75,000	110,000	11,000	26,000	75,000	110,000	10,000	22,000	72,000	130,000	18,000	10,000	30,000	74,000	120,000
Finishing VOC usage, tons VOC	39	77	230	340	34	81	230	340	28	63	200	360	55	29	86	210	330
Cleaning VOC solvent usage, tons	4.3	8.6	6	38	3.8	8.9	26	38	3.4	7.8	25	44	6.2	3.5	10	26	40
Total VOC usage, tons	43	86	260	370	38	90	260	380	32	71	230	400	62	32	96	240	370

describe the overall model plant categories, the finishing sequences, model plant sizes, and coating parameters. The rationale for the categorization is presented in the following sections.

4.1.1 Finish Application Method

The model plant categories are identified as either spray finishing application or roll coating application operations. Four of the five categories of model plants spray apply finishes; one category of the model plants employs flatline application methods (roll coat, curtain coat, or dip coat). Spray application finishing is assumed to be performed with conventional spray guns using compressed air to atomize finishes. Conventional spraying techniques are applicable to a wide range of common finishing needs, including the finishing of nonflat, irregularly shaped furniture pieces, both before and after assembly. Flatline finishing use, however, is relatively limited because pieces must be relatively flat for roll, curtain, and dip coating methods to be used most effectively. Wood furniture manufacturers that finish the components and then assemble the product may be able to use roll, curtain, and dip coating methods only for some of the components. Furniture producers that manufacture ready-to-assemble furniture (with flat components) can also use flatline finishing.

4.1.2 Finishing Sequence

Finishing sequences have been defined for both flatline and spray type application methods. The distinction between short and long finishing sequences for spray application finishing operations has been made for the model plants because the use of lower-VOC finishes may affect the two types of spray finishing operations differently. No further categorizations are necessary for roll, curtain, and dip application methods.

A short finishing sequence is defined as one or two applications of stain, followed by one application each of sealer, and topcoat.[1] A long finishing sequence consists of the following finish application steps: a total of two or more stain applications, washcoat, glaze/filler, sealer, and highlight, and

three topcoat applications.[1] The finishing sequence for roll, curtain, and dip coating application consists of one application each of stain, sealer, and topcoat (three finishing steps).[1] Kitchen cabinets, represented by model plants 11a through 13, are also finished with a short finishing sequence. (They are typically finished with a different type of sealer and topcoat so they are included in a separate category.) Sanding and drying operations occur in between the finishing steps for each of the finishing sequences.

The long finishing sequence requires two or more topcoat application steps, while the other categories require only one topcoat application. Extra small and small furniture finishing facilities are assumed to have one finishing line each and medium and large facilities are assumed to have two finishing lines. The number of spray booths for each finishing line is also provided in Table 4-2.

The actual sequence used at a facility may very well differ from those described. In these instances, the regulatory agency must evaluate the operation from the standpoint of the finishing sequence used and the final finish requirements.

4.1.3 Model Plant Sizes

Model plant sizes and process parameters were developed based on the model plants described in the furniture industry's VOC control technology study. Finish parameters, including VOC content, density, solids content, and relative usage rates, are based on industry's model plants.[1] The model plant types developed by the wood furniture industry in its study, however, are specific to one size plant; to ensure that this CTG's models represent all sizes within the industry, the wood furniture industry's model plants 2, 8, and 10 were scaled up or down, based on total finishing material usage, to create other sizes of plants within a category. In addition, another model plant type was developed and sized for roll coating. See Table 4-3 for a summary of the industry and earlier draft CTG model plants.

4.1.3.1 Coating Usage. Finishing material use for each of the model plants is presented in Table 4-2.[1] Finish usage values

TABLE 4-3. SUMMARY OF INDUSTRY AND EARLIER DRAFT CTG MODEL PLANTS[1,3]

Model plant No.	No. of employees	No. of finishing steps	VOC emissions from finishing, Mg/yr
Industry model plants			
1	10-238	10-14	95
2	250-455	<, = 10	321
3	284-484	Print <, = 9 Finish <, = 10	375
4	120-217	15+	42
5	325-389	<, = 9	286
6	140	<, = 6	66
7	800	Print - 8 Finish - 5	368
8	105-212	4	111
9	159-225	<, = 4	117
10	123-549	3	349
11	108-215	<, = 7	30
12	258-375	<, = 7	88
Earlier draft CTG model plants			
1	<100	6	45
2	100-249	6	204
3	>249	6	454
4	<100	10	45
5	100-249	10	204
6	>249	10	454
7	<100	3	45
8	100-249	3	204
9	>249	3	454
10	100-249	3	204
11	>249	3	454

are used in estimating VOC emissions and the costs of control options.

4.1.3.2 VOC Usage. The total VOC usage provided in Table 4-2 for the model plants includes all VOC from finishing and cleaning operations. In general, VOC emissions from finishes are based on the VOC content of the finishes, which is measured using test Method 24. For the majority of finishes that cure by the evaporation of solvents from the film, all of the VOC is presumed to evaporate to the atmosphere: i.e., VOC usage equals VOC emissions.

The VOC usage for finishing operations (minus cleaning solvents) was used to define the different sizes of model plants. Each size model plant represents a range of usage within the industry. Extra small plants use between 25 and 65 tons per year of VOC, small plants use between 65 and 160 tons per year, medium plants use between 160 and 325 tons per year, and large plants use more than 325 tons per year.[1,2] The range of VOC usage applicable for each model plant is shown in Table 4-4.

Size designations are based on VOC usage, not finishing material usage. The same volume of total finish usage provides differing levels of VOC usage for the five categories of model plants. The combination of coating steps in the finishing sequence varies with each category (for example, stain, stain, sealer, and topcoat for the short spray sequence versus stain, sealer, and topcoat for roll, curtain, and dip coating), and the VOC usage associated with the same quantity of total finish usage for each category would vary. Another important factor that accounts for the differing VOC usage levels is that the VOC content of the finishing materials used for the same type of finishing step (stain, for instance) varies from category to category.

Whether a plant with 177 tons per year of VOC usage from finishing operations is truly "small" in the sense of the level of production is not important here. The plant size designations are made for the purpose of comparing plants with comparable

TABLE 4-4. RANGES OF VOC USAGE AND EMPLOYMENT DATA FOR MODEL PLANTS

Model plant category	Model Plant No.	Finishing VOC range, tons	SIC Code	Employee range
Short	1a	25-65	2511	20-99
			2519	20-99
			2521	50-99
			2531	50-99
			2541	50-99
	1	65-160	2511	100-249
			2519	100-249
			2521	100-499
			2531	100-249
			2541	100-499
	2	160-325	2511	250-499
			2519	250-499
			2521	500-999
			2531	250-499
			2541	500-999
	3	>325	2511	>500
			2519	>500
			2521	>1,000
			2531	>500
			2541	>1,000
Long	4a	25-65	2511	20-99
			2517	20-99
			2519	20-99
			2521	50-99
			2531	50-99
	4	65-160	2511	100-249
			2517	100-249
			2519	100-249
			2521	100-499
			2531	100-249
	5	160-325	2511	250-499
			2517	250-499
			2519	250-499
			2521	500-999
			2531	250-499
	6	>325	2511	>500
			2517	>500
			2519	>500
			2521	>1,000
			2531	>500
Roll	7a	25-50	2534	20-49
			2517	20-99
			2521	50-99
			2531	50-99
			2541	50-99

TABLE 4-4. (continued)

Model plant category	Model Plant No.	Finishing VOC range, tons	SIC Code	Employee range
Roll (cont'd)	7	50-150	2534	50-99
			2517	100-249
			2521	100-499
			2531	100-249
			2541	100-499
	8	150-300	2534	100-249
			2517	250-499
			2521	500-999
			2531	250-499
			2541	500-999
	9	>300	2534	>250
			2517	>500
			2521	>1,000
			2531	>500
			2541	>1,000
Upholstered furniture	10	>25	2512	>100 to 250
Kitchen cabinets	11a	25-50	2434	20-49
	11	50-100	2534	50-99
	12	100-250	2434	100-249
	13	>250	2434	>250

emission reduction potential. Actual plant emissions may lie anywhere in the size ranges indicated.

4.1.3.3 Cleaning Solvent Usage. The usage of VOC solvents for cleaning operations is provided in Table 4-2 for each model plant. Based on information obtained from industry, it was estimated that 10 percent of the total volume of "coating materials" purchased is industrial solvents used for cleaning purposes.[2] Cleaning operations can occur throughout the plant, but the majority of cleaning operations associated with wood furniture finishing operations occur in or near the spray booths. Using an average cleaning material VOC content of 6.9 lb VOC/gal, VOC usage resulting from cleaning operations were estimated and are shown in Table 4-2.

4.1.3.4 Number of Employees. The number of employees also varies with each size model plant and encompasses a fairly wide range for some of the sizes. The range of employees varies among SIC codes for a particular size plant within a model plant category. It is important to remember that model plant size is not specifically related to the number of employees; employee numbers are provided for later use in nationwide emission calculations in Chapter 6. Extra small plants have between 20 and 99 employees, small plants have between 50 and 499 employees, medium plants employ between 100 and 999 workers, and large plants employ greater than 500 workers.[1,2] Employment information is shown in Table 4-4 for each SIC code for each sized model plant.

4.1.4 Finish Parameters

Finishing material parameters have been identified for each of the five model plant categories. The finish parameters are presented in Table 4-5 for each type of finishing material typically used by the model plant facilities. The average VOC content (lb VOC/gal and lb VOC/lb solids) and solids content for the finishing materials used in each of the model plant categories including stain, toner (a type of stain), washcoat, filler/glaze, sealer, highlight, and topcoat, are shown.[1] The VOC content refers to the volatile organic compound content, in grams

TABLE 4-5. FINISHING MATERIAL CHARACTERISTICS

	Short	Long	Roll	Upholstered furniture	Kitchen cabinets
STAIN					
VOC content, g/L (lb/gal)	791 (6.6)	791 (6.6)	815 (6.8)	791 (6.6)	791 (6.6)
VOC content, lb/lb solid	160	160	110	160	130
Solids content, % by weight	0.60	0.60	0.82	0.60	0.75
TONER (Another stain)					
VOC content, g/L (lb/gal)	779 (6.5)	779 (6.5)	NA	779 (6.5)	NA
VOC content, lb/lb solid	17	17	NA	17	NA
Solids content, % by weight	5.7	5.5	NA	5.7	NA
WASHCOAT					
VOC content, g/L (lb/gal)	NA	779 (6.5)	NA	NA	NA
VOC content, lb/lb solid	NA	11	NA	NA	NA
Solids content, % by weight	NA	7.6	NA	NA	NA
FILLER/GLAZE					
VOC content, g/L (lb/gal)	NA	479 (4.0)	NA	NA	NA
VOC content, lb/lb solid	NA	1.0	NA	NA	NA
Solids content, % by weight	NA	50.9	NA	NA	NA
SEALER					
VOC content, g/L (lb/gal)	731 (6.1)	731 (6.1)	623 (5.2)	731 (6.1)	671 (5.6)
VOC content, lb/lb solid	4.6	4.7	2.0	4.6	3.4
Solids content, % by weight	17.9	17.6	33.1	17.9	23.0
HIGHLIGHT					
VOC content, g/L (lb/gal)	NA	791 (6.6)	NA	NA	NA
VOC content, lb/lb solid	NA	51	NA	NA	NA
Solids content, % by weight	NA	1.9	NA	NA	NA
TOPCOAT					
VOC content, g/L (lb/gal)	719 (6.0)	719 (6.0)	599 (5.0)	719 (6.0)	599 (5.0)
VOC content, lb/lb solid	3.6	3.8	1.7	3.6	1.9
Solids content, % by weight	21.9	20.9	36.6	21.9	35.0

of VOC per liter of coating less water (g/L-water). Negligibly photochemically reactive compounds are included with the water.

The relative VOC emissions for each model plant category are presented in Table 4-6. The largest portion of relative emissions may result from a different finishing step in the finishing sequence for each model plant category. Stain application is the major contributor to emissions for both the roll, curtain, and dip coating and kitchen cabinet finishing categories, at 39 percent and 38 percent, respectively. In the short finishing sequence, sealer application, which accounts for 44 percent of emissions, is the major contributor to VOC emissions; emissions from the sealer step in the upholstered furniture category account for 44 percent of total VOC emissions. The VOC emission attributable to the application of topcoat accounts for 37 percent of total VOC emissions for the long finishing sequence. For stain, sealer, and topcoat, the three most prevalent coating steps for the model plants, the relative emissions remain within a fairly small range over the five categories.

TABLE 4-6. RELATIVE PERCENTAGE OF VOC EMISSIONS

Model plant category	Short	Long	Roll	Upholstered	Kitchen cabinets
Stain	19%	26	39	19	38
Toner	1	3	-	1	-
Washcoat	-	8	-	-	-
Filler/glaze	-	1	-	-	-
Sealer	44	16	25	44	28
Highlight	-	9	-	-	-
Topcoat	36	37	36	37	34

4.2 EMISSIONS ESTIMATES

Total VOC coating emissions, broken down by finishing step and by emission point, and cleaning solvent VOC emissions are discussed in the following sections.

4.2.1 Emissions by Finishing Step

For all of the finishing materials used in defining the model plants, all of the VOC contained in the coatings is presumed to evaporate to the atmosphere. Because the VOC contained in the coatings used in the furniture industry generally does not become part of the finish during curing, this assumption is thought to be reasonable. The VOC contents in Table 4-5 were used in conjunction with the total finish usage of each material for each model plant to determine the VOC emissions from each finishing step. The emission summary is presented in Table 4-7. As can be seen in Table 4-7, the majority of the emissions from furniture finishing operations for each model plant category are from stain and topcoat application.

4.2.2 Emissions by Emission Point

Volatile organic compound emissions from finishing operations occur at three primary points in the finishing process: the spray booths, the flashoff (air dry) areas, and the ovens. Volatile organic compound emissions also result from cleaning operations, including equipment cleaning and general cleaning operations. A comparatively small source of emissions is the finished piece, which may still contain small amounts of solvent that eventually volatilize. Total emissions from the finished piece (once all finishing operations are completed) are expected to be less than 1 percent of the total VOC emissions.[4] The magnitude and distribution of the VOC emissions from finishing and cleaning operations are discussed below.

The relative distribution of VOC emissions among the spray booths, flashoff areas, and ovens varies among plants. Finish formulation affects the emissions distribution. For example, if a finish containing mostly low-boiling solvents is applied in a spray booth, the solvents will evaporate quickly, and relatively more emissions will occur in the booth and flashoff areas than would occur if a finish with high-boiling solvents was used. The distribution of emissions is also affected by the layout of the finishing line and the finishing sequence used. The relative positions and design of the booths, flashoff areas, and ovens can

TABLE 4-7. MODEL PLANT SUMMARY--UNCONTROLLED VOC EMISSION RATES, tons/yr

Model plant category	Short				Long				Roll				Upholstered furniture	Kitchen cabinets			
Plant No.	1a	1	2	3	4a	4	5	6	7a	7	8	9	10	11a	11	12	13
Stain	7.3	15	44	64	8.9	21	60	89	11	25	79	140	10	11	32	80	120
Toner	0.41	0.81	2.4	3.6	1.1	2.7	7.8	11	NA	NA	NA	NA	0.59	NA	NA	NA	NA
Washcoat	NA	NA	NA	NA	2.7	6.3	18	26	NA	NA	NA	NA	NA	NA	NA	NA	NA
Filler/glaze	NA	NA	NA	NA	0.50	1.2	3.4	5.1	NA	NA	NA	NA	NA	NA	NA	NA	NA
Sealer	17	34	100	150	5.3	13	36	53	7.0	16	50	88	24	8.2	24	60	94
Highlight	NA	NA	NA	NA	3.1	7.3	21	31	NA	NA	NA	NA	NA	NA	NA	NA	NA
Topcoat	14	28	84	120	13	30	86	130	10	23	72	130	20	9.6	29	71	110
Finishing total	39	77	230	340	34	81	230	340	28	63	200	360	55	29	86	210	330
Cleaning solvent	4.3	8.6	26	38	3.8	8.9	26	38	3.4	7.8	25	44	6.2	3.5	10	26	40
Total VOC emissions	43	86	260	370	38	90	260	380	32	71	230	400	62	32	96	240	370

affect the relative emissions. The length of the flashoff area can also affect the emissions distribution. Finishing sequences for typical furniture facilities were described previously in Chapter 2. Not all spray booths are followed by both an air dry (flashoff) area and an oven; in many instances, there is only a flashoff area in between two spray booths, without an oven. In such instances, the emissions would be distributed just between the booth and flashoff areas.

Although the distribution of VOC emissions among the booths, flashoff areas, and ovens varies with finish formulation and plant layout, overall average emissions distributions have been developed based on previous studies and conversations with add-on control equipment suppliers. These emission distributions are discussed below. The actual VOC emissions from each emission point are also a function of the amount of VOC that is captured and exhausted to the atmosphere or an add-on control device. Therefore, an estimate of the percentage of VOC that is exhausted is provided following the emission distribution discussion.

The study conducted by industry indicates that emissions from spray booths represent from 84 to 97 percent of the total VOC emissions.[1,4-6] More or less emissions may occur in the spray booths depending on the properties of VOC solvents used for individual finishing steps. Because stains contain many low-boiling solvents, relatively more emissions (95 to 97 percent) were estimated to occur in the stain spray booth, whereas the sealer and topcoat spray booth emissions were estimated to be 84 to 87 percent of the total. The study estimated that from 90 to 94 percent of washcoat emissions occur in the spray booth.[1]

Flashoff areas are located either between spray booths or between a spray booth and an oven. Some or all of the solvent remaining on the recently sprayed piece evaporates in the flashoff area. Based on industry studies, it was estimated that in a booth, flashoff, oven sequence, between 3 and 11 percent of the total VOC emissions are emitted in flashoff areas. If the flashoff area is not followed by an oven, essentially all of the remaining solvent is expected to evaporate in the flashoff area.

Thus, in such instances, flashoff emissions are expected to be approximately 5 to 16 percent of the total VOC emissions.[1,4-6]

Ovens are sometimes used to cure the finish prior to the next step in the finishing process. Previous studies indicate that approximately 2 to 5 percent of the total VOC finishing emissions occur in the oven.[4-6] The ovens used by many furniture manufacturers that finish pre-assembled pieces are enclosed tunnels with open ends where the pieces enter and exit the oven on a belt.

In a typical furniture finishing room, there are no roof vents. The only finishing room exhausts are those from the spray booths and ovens. The total exhaust often exceeds the makeup inflow rate, which results in the finishing room being maintained at a negative pressure relative to the outside. Because the exhaust flowrates of the spray booths are generally quite large, and because the flashoff area is located either in between two booths or in between a booth and an oven, the majority of the flashoff emissions are expected to be exhausted through the booths and ovens. Even in an operation with a long flashoff area, most of the flashoff emissions are expected to eventually be exhausted through the booths and/or ovens, since they are generally the only forced exhaust points.

Since the ovens are mostly enclosed, most of the VOC emissions generated in the oven are expected to be exhausted from the oven to the atmosphere. Though spray booths are more open than ovens, the booths are the only (other than the ovens) forced exhaust from the building and thus, most of the VOC emitted in the booths is expected to be exhausted out the booth exhaust. Where the emissions from the flashoff areas is exhausted depends on the relative locations of the booths and ovens. For purposes of this CTG, it is estimated that approximately 90 percent of the total VOC emissions released in the spray booths, ovens, and flashoff areas combined are exhausted from the facility through the exhaust system, based on engineering judgement. Approximately 10 percent of the total VOC emissions are estimated

to leave the finishing area through openings such as doors and windows.

The majority of cleaning operations occur in or near the spray booths. As discussed previously, cleaning solvent usage is 10 percent of the total volume of "coating materials" purchased. The assumption is made that all VOC cleaning solvent used is emitted.

The distribution of finishing and cleaning solvent emissions is presented in Table 4-8; finishing emissions are provided by coating type and emission point. Table 4-8 presents the emissions that are exhausted through the booths and ovens, which, as previously discussed, represents approximately 90 percent of the finishing emissions (minus cleaning solvents). The other miscellaneous 10 percent of finishing emissions released through doors and windows are also shown. This table provides a breakdown of emissions by finishing step for every size model plant in each of the five model plant categories. Because it is assumed that staining operations involve just a spray booth and a flashoff area, with no oven, stain emissions are distributed between the booth and flashoff areas. Emissions from cleaning solvent operations, 10 percent of the total volume of "coating materials" purchased, are also presented for each model plant.

TABLE 4-8. EMISSIONS DISTRIBUTION, tons/yr

	Short				Long				Roll				Upholstered furniture	Kitchen cabinets			
Coating step	1a	1	2	3	4a	4	5	6	7a	7	8	9	10	11a	11	12	13
Stain:																	
Booth, flashoff	6.6	13	39	58	8.0	19	54	80	9.9	22	71	120	9.0	9.7	29	72	110
Misc. (doors, windows, etc.)	.73	1.5	4.4	6.4	.89	2.1	6.0	9.0	1.1	2.5	7.9	14	1.0	1.1	3.2	8.0	12
Total	7.3	15	44	64	8.9	21	60	89	11	25	79	140	10	11	32	80	125
Toner:																	
Booth, flashoff, oven	0.37	0.73	2.2	3.2	0.99	2.4	6.3	9.9	NA	NA	NA	NA	0.53	NA	NA	NA	NA
Misc. (doors, windows, etc.)	0.04	0.08	0.24	0.36	0.11	0.27	0.70	1.1					0.06				
Total	0.41	0.81	2.4	3.6	1.1	2.7	7.8	11					0.59				
Washcoat:																	
Booth, flashoff, oven	NA	NA	NA	NA	2.5	5.7	16	23	NA	NA	NA	NA	NA	NA	NA	NA	NA
Misc. (doors, windows, etc.)					0.27	0.63	2.0	2.6									
Total					2.7	6.3	18	26									
Filler/glaze:																	
Booth, flashoff, oven	NA	NA	NA	NA	0.45	1.08	3.1	4.6	NA	NA	NA	NA	NA	NA	NA	NA	NA
Misc. (doors, windows, etc.)					0.05	0.12	0.34	0.51									
Total					0.50	1.20	3.4	5.1									
Sealer:																	
Booth, flashoff, oven	15	31	91	130	4.8	12	32	48	6.3	14	45	79	21	7.4	22	54	85
Misc. (doors, windows, etc.)	1.7	3.4	10	15	0.53	1.3	3.6	5.3	.70	1.6	5.1	8.8	2.4	0.82	2.4	6.0	9.4
Total	17	34	100	150	5.3	13	36	53	7.0	16	50	88	24	8.2	24	60	94
Highlight:																	
Flashoff	NA	NA	NA	NA	2.8	6.5	19	28	NA	NA	NA	NA	NA	NA	NA	NA	NA
Misc. (doors, windows, etc.)					0.31	0.73	2.1	3.1									
Total					3.1	7.3	21	31									
Topcoat:																	
Booth, flashoff, oven	12	25	76	110	11	27	78	110	9.1	20	65	120	18	8.6	26	64	100
Misc. (doors, windows, etc.)	1.4	2.8	8.4	12	1.3	3.0	8.6	13	1.0	2.3	7.2	13	2.1	0.96	2.9	7.1	11
Total	14	28	84	120	13	30	86	130	10	23	72	130	20	9.6	29	71	110
Cleaning operations	4.3	8.6	26	38	3.8	8.9	26	38	3.4	7.8	25	44	6.2	3.5	10	26	40

4.3 REFERENCES FOR CHAPTER 4

1. ENSR Consulting and Engineering. An Evaluation of VOC Emissions Control Technologies for the Wood Furniture and Cabinet Industries. Prepared for the American Furniture Manufacturers Association, Business and Institutional Furniture Manufacturers Association, Kitchen Cabinet Manufacturers Association, and the National Paint and Coatings Association. January 1992.

2. Memorandum. Rasor, S., MRI, to Strum, M., EPA/ESD/CPB. Summary of Responses to the Information Collection Request for the Wood Furniture Industry. January 28, 1994.

3. Control of VOC Emissions from Wood Furniture Coating Operations-Draft Chapters 1 through 5 of Control Techniques Guideline. U. S. Environmental Protection Agency, Research Triangle Park, NC. October 1991.

4. H. Van Noordwyk, Acurex Corp. Reducing Emissions from the Wood Furniture Industry with Waterborne Coatings. Prepared for the Environmental Protection Agency. EPA-600/2-80-160. July 1980.

5. Telecon. Christie, S., Midwest Research Institute, with Novak, W., Industrial Technology Midwest. February 26, 1991. Spray booth recirculation and emissions.

6. Telecon. Caldwell, M.J., Midwest Research Institute, with Shugarman, L., Terr-Aqua Enviro Systems. February 28, 1991. Emissions distribution in wood furniture plants.

7. Memorandum. Christie, S., Midwest Research Institute, to Catlett, K., EPA/ESD/CPB. Preliminary Assessment of Industrial Solvent Use in Wood Furniture Coating Operations. January 28, 1991.

5.0 SELECTION OF RACT

This chapter discusses the selection of reasonably available control technology (RACT) to control volatile organic compound (VOC) emissions from wood furniture manufacturing operations. The process through which RACT was selected and the other regulatory activities that affected RACT selection are discussed in Section 5.1. The selection of specific guidelines such as the reference control technologies, work practice standards, and compliance provisions are discussed in Sections 5.2, 5.3, and 5.4, respectively. Finally, small business issues that were considered in selecting RACT are identified in Section 5.5.

As is discussed further in Chapter 7, the RACT guidelines presented in this document are simply a framework for State and local regulatory agencies. These agencies will promulgate the specific regulations that sources will be required to implement to meet RACT. Possible ways for agencies to codify RACT guidelines are discussed in Chapter 7, and a model rule is presented in Appendix B.

The environmental and cost impacts associated with RACT are provided in Chapter 6, along with the impacts associated with other alternatives that were not selected as RACT.

5.1 BACKGROUND

The determination of RACT for the wood furniture manufacturing industry was concurrent with a national emission standards for hazardous air pollutants (NESHAP) that is also being developed for the industry. The NESHAP is a regulation that will control emissions of hazardous air pollutants (HAP) listed in Section 112(b) of the Clean Air Act, as required by Sections 112(c) and (d) of the Act. Control of HAP is achieved

by requiring major sources to implement maximum achievable control technology (MACT). Although the CTG and the NESHAP pertain to controlling VOC's and HAP, respectively, a source could potentially be affected by both. For example, some of the HAP are also VOC's; a major source of HAP that is located in a nonattainment area and that emits HAP that are VOC's would have to comply with the NESHAP and, if it emits above the CTG cutoff, would also have to comply with the RACT imposed by the State regulatory agency. In selecting RACT, the EPA considered this potential overlap.

As discussed in Chapter 1, both RACT and the requirements of the NESHAP were selected within the framework of a regulatory negotiation. In trying to reach an agreement on the presumptive norm for RACT, the Committee looked at several factors. In particular, they focused on technologies that they deemed to be reasonable for all segments of the wood furniture industry at the present time. In developing coating emission limitations, they also considered the impact of the work practice standards. After much discussion, the Committee agreed upon a combination of emission limitations and work practice standards they believed represented RACT for the wood furniture industry.[1]

The remaining sections of this chapter provide a summary of RACT and discuss the rationale the Committee used in selecting the requirements that form the basis for RACT.

5.2 SELECTION OF REFERENCE CONTROL TECHNOLOGIES

The presumptive norm that forms the basis for RACT consists of reference control technologies and work practice standards. The selection of work practice standards is presented in Section 5.3. Through the regulatory negotiation process, the Committee decided that two reference control technologies should form the basis of RACT These technologies are either (1) waterborne topcoats, or (2) higher solids sealers and topcoats, as identified in Table 5-1. As indicated in this table, State agencies should apply RACT to sources located in ozone nonattainment areas (except extreme nonattainment areas) that emit or have the potential to emit 25 tons per year

(tons/yr) or more of VOC's. The RACT requirements should be applied to sources in extreme nonattainment areas that emit or have the potential to emit 10 tons/yr or more of VOC's.

TABLE 5-1. REFERENCE CONTROL TECHNOLOGIES TO MEET RACT[a]

Coating type	Allowable VOC content, kg VOC/kg solids (lb VOC/lb solids)
1. Topcoats; or	0.8
2. Topcoats and sealers	
- sealer	1.9
- topcoat	1.8
- acid-cured alkyd amino vinyl sealers	2.3
- acid-cured alkyd amino conversion varnish topcoats	2.0

[a]RACT requirements apply to all sources located in nonattainment areas (other than extreme areas) that emit or have the potential to emit 25 tons/yr or more of VOC's. Sources located in extreme areas must meet the RACT requirements if they emit or have the potential to emit 10 tons/yr or more of VOC's.

Once the Committee decided that RACT should include the use of waterborne topcoats or higher-solids sealers and topcoats, a specific format for identifying allowable emissions from these technologies had to be chosen. In recommending a format for RACT, the following factors were considered:

1. The format must accommodate multiple compliance techniques for the various industry segments;

2. Given the large number of small businesses in this source category, the format must ensure that the cost of compliance is not excessive;

3. The format must assure that an equivalent level of control is achieved by all affected sources;

4. The format must facilitate enforcement by regulatory agencies; and

5. If possible, the format should be consistent with the format selected for the MACT standards because a source could potentially be subject to both RACT and MACT.

The possible formats considered include: (1) a limit on emissions of VOC per kilogram (pound) of coating solids; (2) a percent reduction format; (3) a limit on emissions of VOC per liter (gallon) of coating, less water; and (4) a limit on emissions of VOC per liter (gallon) of coating solids. For all formats limiting VOC content, the VOC content should be calculated as applied to account for in-house dilution of coatings purchased from an outside source.

The format selected by the Committee (and included in the model rule in Appendix B) is a limit on the kilograms (pounds) of VOC emitted per kilogram (pound) of coating solids (kg VOC/kg solids (lb VOC/lb solids)). Another possible format, percent reduction, was not selected because several disadvantages to this format were identified. Primarily, the percent reduction that will result from implementing RACT will vary from facility to facility. This is especially the case when reformulated coatings are used in lieu of conventional add-on controls. To implement a global percent reduction format, baseline conditions at each affected source would have to be assessed. At an uncontrolled facility, this would not be a problem; baseline conditions would be the current emission rate (although exactly which year represents "typical" for baseline may not be straightforward). The percent reduction would be applied to this uncontrolled rate to calculate the controlled VOC emission rate required by the rules implementing RACT. Problems with the percent reduction format arise, however, if a facility has implemented control strategies prior to being subject to RACT. If the same baseline year is selected for both the uncontrolled and controlled facility, the controlled facility would have to ultimately control a greater quantity of VOC emissions than the uncontrolled facility. In some instances, however, a percent reduction format offers advantages. For example, a percent reduction format

allows sources the flexibility to choose any control method feasible for their situation.

A limit on the kilograms (pounds) of VOC contained in a liter (gallon) of coating (kg VOC/liter [lb VOC/gal]), less water, was also considered. A similar format was considered for the MACT standard but was eliminated because it does not give ample credit to sources that substitute non-HAP VOC for HAP in their coatings. Another format considered was one expressed as kg VOC/liter solids (lb VOC/gal of solids). For both RACT and MACT, however, a disadvantage to this format is that there is no EPA test method currently available for accurately measuring the volume of solids in a coating. As stated above, consistency between MACT and RACT is desired and therefore neither format (kg VOC/liter [lb VOC/gal]) of coating or kg VOC/liter (lb VOC/gal) of solids was selected for RACT.

Once the format was selected, the actual emission limits associated with the coating technologies had to be selected. Based on data presented by the industry, the major suppliers of wood furniture coatings who participated in the negotiation supply waterborne topcoats with VOC contents ranging from 0.3 to 0.8 kg VOC/kg solids (lb VOC/lb solids). Due to variations in ambient conditions, additional solvent is sometimes added to the waterborne coatings, raising the VOC content of the as-applied coatings. The committee therefore chose 0.8 kg VOC/kg solids (lb VOC/lb solids) as a reasonable VOC limit for waterborne topcoats.

For higher-solids sealers and topcoats, the Committee decided that different coating limits were appropriate depending on the type of sealer and topcoat used by a facility. As discussed in Chapter 2, residential furniture manufacturers typically use nitrocellulose sealers and topcoats. These conventional coatings have a solids content ranging from 15 to 20 percent by weight. Office furniture manufacturers typically use acid-catalyzed sealers and topcoats. The solids content of these coatings ranges from 20 to 30 percent solids. Finally, kitchen cabinet manufacturers typically use vinyl sealers and

conversion varnishes with a solids content ranging from 25 to 35 percent by weight.

The Committee decided that there were no higher solids sealers and topcoats available to the entire wide range of finishing sequences that were readily usable by the existing processes and met the performance specifications of the vinyl sealers and conversion varnishes. Therefore, they agreed on a limit of 2.3 kg VOC/kg solids (lb VOC/lb solids), as applied, for acid-cured alkyd amino vinyl sealers. For acid-cured alkyd amino conversion varnishes, they agreed on a limit of 2.0 kg VOC/kg solids (lb VOC/lb solids), as applied. These values are roughly equivalent to coatings with a solids content of 30 percent by weight.

For all other sealers and topcoats, the Committee decided on limits of 1.9 kg VOC/kg solids (lb VOC/lb solids) and 1.8 kg VOC/kg solids (lb VOC/lb solids), as applied, respectively. These values roughly correspond to coatings with a solids content of 32 to 35 percent by weight.

5.3 SELECTION OF WORK PRACTICE STANDARDS

In selecting RACT and the requirements for the NESHAP, the Committee recognized that VOC and HAP emissions could be further reduced by implementing work practice standards. The work practices selected for the proposed NESHAP and as part of RACT are basically the same One difference is that there are additional work practices in the NESHAP which are particularly concerned with the use of specific materials due to their potential effects on health and the environment. The work practices that are included as part of RACT are concerned solely with reducing VOC's.

The Committee believed that there were reasonable work practices to reduce VOC emissions from both coating operations, cleaning operations, and washoff operations.

5.3.1 Coating Operations

Specifically, three areas in which VOC emissions from coating operations could be reduced through work practices were identified: VOC storage, VOC transfer, and coating application.

Work practices for each of these areas are discussed below and summarized in Table 5-2.

5.3.1.1 VOC Storage. Materials containing VOC are often stored in containers that are left open, allowing the VOC to evaporate and be emitted through room ventilation to the atmosphere. A straightforward, inexpensive method of reducing emissions from VOC storage would be to use normally closed containers, that is, to cover all VOC storage containers when not in use. This practice has already been implemented at some facilities. In addition to reducing VOC emissions to the atmosphere, this work practice has the added benefit of reducing worker exposure to VOC and creating a cost savings by reducing evaporative losses.

5.3.1.2 VOC Transfer. In wood furniture coating operations, coating is pumped from its storage container to the spray gun through piping. The most likely locations for leaks to occur in such a transfer system are from the pumps and at the coating application equipment juncture. The Committee agreed that requiring sources to check these areas for leaks was reasonable. To implement the leak inspection program, sources should develop an inspection and maintenance (I&M) plan that requires the inspection of each piece of equipment used to transfer or apply finishing materials or solvents. The inspection may be a visual inspection only, but it must be conducted at a minimum frequency of once per month, with repairs to leaking equipment made within 15 calendar days unless new equipment must be ordered. Also, the plan should identify the procedures to be followed in the event that a pump or coating application equipment malfunctioned such that a VOC release could occur.

This work practice includes some minimum criteria that are necessary for an I&M program to be effective. For example, the Committee believed that a monthly inspection frequency would be appropriate to accomplish the goal of reducing leaks from pumps and coating application equipment. More frequent monitoring may be burdensome; smaller shops would not have the personnel to perform the inspections and larger shops would be devoting a

TABLE 5-2. WORK PRACTICE STANDARDS TO MEET RACT

Emission source	Work practice
Finishing operations	
Transfer equipment leaks	Develop written inspection and maintenance plan to address and prevent leaks. The plan must identify a minimum inspection frequency of 1/month and procedures for addressing malfunctions.
Storage containers, including mixing equipment	When such containers are used for VOC or VOC-containing materials, keep covered when not in use.
Application equipment	Discontinue use of conventional air spray guns.[a]
Cleaning operations	
Gun/line cleaning	- Collect cleaning solvent into a closed container. - Cover all containers associated with cleaning when not in use.
Spray booth cleaning	- Use strippable spray booth coating with a VOC content of no greater than 0.8 kg VOC/kg solids (lb VOC/lb solids). - Do not use solvents unless cleaning conveyors or metal filters, or refurbishing the spray booth.
Washoff tanks/general cleaning	- Keep washoff tanks covered when not in use. - Minimize dragout by tilting and/or rotating part to drain as much solvent as possible and allowing sufficient dry time. - Maintain a log of the quantity and type of solvent used for washoff and cleaning, as well as the quantity of waste solvent shipped offsite, and the fate of this waste (recycling or disposal). - Maintain a log of the number of pieces washed off, and the reason for the wash off.
Miscellaneous	
Operator training	All operators shall be trained on proper application, cleanup, and equipment use. A training program shall be written and retained onsite.
Implementation plan	Develop a plan to implement these work practice standards and maintain onsite.

[a]Conventional air guns will be allowed in the following instances:
- when they are used on conjunction with coatings that emit less than 1 kg (lb) VOC per kg (lb) of solids used;
- for touchup and repair under limited conditions;
- when spray is automated;
- when add-on controls are employed,
- if the cumulative application is less than 5 percent of the total gallons of coating applied; or
- if the permitting agency determines that it is economically or technically infeasible to use other application technologies.

significant portion of time to monitoring the many pumps and coating stations. The monthly inspection frequency is further supported by other EPA regulatory actions.[2] The leak detection and repair program identified in Subpart H of the hazardous organic NESHAP (HON) (57 FR 62608) also requires monthly inspection of pumps. To ensure that action would be taken if leaks were detected, the I&M plan should require that repairs be made within 15 calendar days, with a first attempt at repair made within 5 calendar days. Again, the EPA's decision is supported by previous regulatory action; the HON and the NESHAP for coke oven batteries both require this same repair timeframe.[2,3]

The I&M plan must also somehow address equipment malfunctions. In the model rule in Appendix B, this is accomplished by requiring that the I&M plan include a malfunction plan. Such a plan has its basis in the startup, shutdown, malfunction plan required by § 63.6(e) of the General Provisions to 40 CFR Part 63.[4] As discussed in Chapter 7, the State or local regulatory agency may pursue a different method for addressing malfunctions, as long as it achieves the same goal of requiring a facility to address equipment malfunctions.

5.3.1.3 Coating Application. Another aspect of wood furniture coating operations that was evaluated was the type of coating application equipment used. There have been numerous studies comparing the transfer efficiency of one type of application equipment with that of another type. Transfer efficiency is the amount of coating that actually is applied to a surface compared to the total amount of coating used for the application process. The higher the transfer efficiency, the less coating that is used and the less coating that is lost as overspray (sprayed coatings that miss the piece). Overspray eventually dries, releasing VOC's, and becomes a solid waste source for the facility. Thus, by increasing transfer efficiency, both air emissions and solid waste are reduced.

Traditionally, the EPA's position on transfer efficiency has been one that advocates the use of more efficient transfer methods, but EPA contends that emission reductions resulting from

these methods cannot be generally quantified for every coating situation or easily monitored on a continuous basis, and, thus, sources cannot receive emission credits for improving transfer efficiency. To deal with this issue, the Committee explored a work practice which would require the use of technologies believed to result in more efficient application of coating. To encourage innovation in application equipment, the work practices include an equipment requirement that does not require the use of specific application equipment but limits the use of conventional air guns because they are the least efficient transfer method. Exempted situations may include one in which a source is using low-VOC coatings (less than 1 kg VOC/lb solids [1 lb VOC/lb solids]) or add-on control devices; transfer efficiency is not critical in these situations. Also, if the use of air guns is limited to specialty operations but more efficient application methods were used for the majority of coating, the environmental impact of using conventional air guns would be minimal. The specific exemptions to the conventional air spray gun prohibition are provided in Table 5-2.

Operator training on coating application is also a required work practice. By training the operators on proper equipment operation, transfer efficiency will increase, resulting in a reduction of VOC emissions to the atmosphere. This work practice is discussed further later in the chapter.

5.3.2 Cleaning and Washoff Operations

As discussed in Chapter 2, cleaning activities that occur at wood furniture manufacturing operations include cleaning of spray guns, lines conveying coatings from storage to the spray guns, and spray booths. The Committee also agreed on work practices for washoff operations. Washoff involves the use of solvents to remove coating from furniture. In determining the work practices to be selected for cleaning and washoff operations, the Committee considered work practices that were being performed in the source category to limit emissions from these activities.

The Committee concluded that there were reasonable work practices in use by existing facilities in the source category to

limit emissions from each major cleaning and washoff activity: gun/line cleaning, spray booth cleaning, and furniture washoff/general cleaning activities. These work practices are summarized in Table 5-2 and are discussed below.

5.3.2.1 Gun/Line Cleaning. The cleaning of spray guns and of lines that carry the coating from storage to the spray guns is a common practice in wood furniture operations. Cleaning is necessary so that dried resins or other materials do not build up in the lines or spray equipment. The frequency of cleaning varies by plant, depending on the different types of coating sprayed with a given gun, the extent to which a gun is used, and other plant-specific factors. Typically, a gun is cleaned each time it is used to spray a different coating. If a gun is dedicated to one type of coating (e.g., topcoat), cleaning frequency may be reduced. The practice of dedicating a gun to a particular coating type is not common, however, especially at smaller shops that have fewer spray stations.

One cleaning operation work practice included in RACT requires that solvent used for cleaning be collected into a closed container. For example, if a line is flushed, the cleaning solvent could be collected into a container with a lid that has an opening of sufficient size for the line to fit in; the rest of the container could be covered. Such a container could be prefabricated onsite, or purchased from an outside vendor, at a minimal cost to the plant. Another work practice that is included in RACT and that could be easily implemented is the use of normally closed containers, that is, covering cleaning solvent containers when not in use. As discussed for VOC storage containers associated with coating operations, such a practice is straightforward and inexpensive to implement.

5.3.2.2 Spray Booth Cleaning. The work practices identified as part of RACT require the use of strippable spray booth materials with a VOC content no greater than 0.8 kg VOC/kg solids (lb VOC/lb solids). A strippable spray booth material is one that is applied to spray booth walls; coating overspray is collected on the material, and the material is regularly stripped

off and disposed of. Therefore, only small quantities of solvent are needed to clean the spray booth walls. The work practices prohibit the use of solvents for spray booth cleaning except in limited circumstances because facilities could easily convert to using strippable spray booth materials that eliminate the use of solvents for this purpose. The Committee recognized that there were instances in which it was unreasonable to prohibit solvent use for cleaning. Specifically, it was agreed that conveyors carrying furniture or furniture components through the spray booth could continue to be cleaned with solvent. Likewise, metal filters, such as those that are located at the back of the spray booth and are used to prevent particulate matter from entering, require solvent cleaning. The Committee was not aware of substitute materials that could be used for cleaning this equipment, or of any strippable coating such as the coating that is available for the spray booth walls. Additionally, industry representatives pointed out that small tears and holes may be generated in the strippable booth coating during the manufacturing process. In these cases, some staining of the spray booth walls may occur. The Committee agreed that sources could use small quantities of solvent, no more than 3.8 liters (1.0 gallon) per booth, to clean these areas when the strippable coating was being replaced.

5.3.2.3 Furniture Washoff/General Cleaning Activities. The final area of concern for which a work practice has been identified is the procedure known in the industry as washoff. Washoff is the removal of the coatings from a piece of furniture or a furniture component because the quality of the finish does not meet company specifications By washing off the coatings, the substrate can be refinished. Washoff is typically accomplished by dipping the furniture into a tank containing solvent. The Committee agreed that there were some measures that sources could implement that are reasonable and that would minimize emissions from washoff activities. As with coating and other cleaning operations, it was agreed that wash tanks could be covered when they are not in use to limit solvent emissions.

Also, sources could minimize "dragout" by tilting and/or rotating the piece to drain as much solvent as possible and allowing sufficient drip time. Dragout is the solvent that remains on a part after it is removed from the washoff tank; this solvent evaporates and is eventually emitted through room ventilation to the atmosphere. Minimizing dragout would therefore minimize emissions.

During the Committee's discussions, it was apparent that cleaning and washoff practices are not well documented by sources. For example, most sources do not know the quantity of solvent used for cleaning and washoff operations, how many pieces are washed off, the reason for washoff, and the fate of spent solvent from cleaning and washoff operations. Tracking washoff practices will focus attention on quality control issues. Tracking may result in quicker identification of process problems which will reduce efforts on refinishing and save money on materials and labor. A reduction in refinishing will also mean better working conditions due to less washoff emissions. The Committee also agreed that one of the first steps in reducing emissions is to know the quantity of solvent used for the various operations onsite. Only then can a source identify operations that are perhaps wasteful or inefficient. Therefore, the Work Group proposed that the work practices include a tracking system plan through which sources would:

1. Maintain a log of the quantity and type of solvent used for washoff and cleaning, the number of pieces washed off daily, and the reason for the washoff; and

2. Record the quantity of spent solvent generated from each activity, and its ultimate fate either onsite or offsite.

The cleaning and washoff solvent usage quantities could be calculated and reported at some pre-established frequency. The model rule in Appendix B identifies monthly calculations and reporting of these monthly quantities.

5.3.3 General Work Practice Requirements

After reviewing the work practices included in RACT, the Committee concluded that in order for the work practices to be successfully implemented, employees that would actually have to carry them out should be involved in their implementation. Therefore, an operator training program is included as a required work practice. The Committee believed that operator training was especially important for new employees and therefore recommends that new employees be trained upon hiring. Any rule implementing this requirement should be flexible and allow sources to develop programs that work best for their facility or that could be coordinated with existing training programs. At a minimum, however, this work practice requires that the employee training program address coating application, cleaning, and washoff techniques that minimize emissions; proper equipment operation; methods to reduce solvent usage; and proper management of cleanup wastes. The work practice also requires that employees be retrained on an annual basis.

Finally, the Committee recognized that a source should maintain a plan to implement the work practices included in RACT. Therefore, the work practices include the development of an Implementation Plan that describes how sources plan to comply with the work practice requirements on an on-going basis. Based on the work practices included in RACT, the Committee believed that any Implementation Plan should include, at a minimum, the following:

1. Checklists to document that:

- all storage containers are covered where not in use;
- solvents are not being used for spray booth cleaning except when metal filters or conveyors are being cleaned or the spray booth is being refurbished;
- conventional air spray guns are not in use except for the specific situations identified;
- cleaning solvent from gun/line cleaning has been collected into a closed container;and
- the washoff tank is covered when not in use;

2. An I&M plan as discussed above;

3. A tracking system for washoff and cleaning solvents as discussed above; and

4. The operator training program discussed above.

The Work Practice Implementation Plan would be followed and maintained onsite to demonstrate ongoing compliance, and made available at the request of the Agency at any time.

5.4 SELECTION OF COMPLIANCE PROVISIONS

In discussing the compliance provisions, the Committee decided only on some general requirements regarding compliance. The Committee, for example, believed that any rule codifying RACT should allow the use of reference control technologies, as well as other technologies that may be equivalent to the reference control technologies in terms of air emission control. Examples of how a rule could accomplish this are discussed in Chapter 7.

The Committee also agreed that, when reference control technologies are used, compliance should be accomplished through reporting and recordkeeping, with reporting occurring on a semiannual basis. Specifically, reports should include certified product data sheets that provide the VOC content of a coating in kg VOC/kg solids (lb VOC/lb solids), as applied. If the data sheet provided by the coating supplier identifies the VOC content in kg VOC/kg solids (lb VOC/lb solids) and the facility then dilutes the coating, the facility must account for this dilution and report the VOC content of the coating that is actually applied, not the VOC content of the coating as purchased.

In summary, the compliance provisions contained in the rule that implements RACT should include:

1. Methods that allow compliance through the use of reference control technologies as well as other control methods that can be demonstrated as equivalent;

2. The means by which alternate methods are demonstrated as equivalent;

3. Compliance through reporting and recordkeeping, with reporting occurring on a semiannual basis; and

4. When reference control technologies are used, compliance through reports of the VOC content of coatings, as applied, in kg VOC/kg solids (lb VOC/lb solids).

The model rule presented in Appendix B allows facilities to use one of three methods, or a combination of the three methods, to comply with the requirements of the model rule. These include use of compliant coatings, use of an add-on control device, or use of an averaging approach. The model rule provides detailed guidance on monitoring, recordkeeping, and reporting requirements associated with each of these compliance methods.

5.5 SMALL BUSINESS CONSIDERATIONS

Because of the large number of small businesses that could potentially be impacted by regulation of the wood furniture industry, the Committee considered carefully the impact of each aspect of presumptive RACT on small businesses. The regulatory negotiation Committee included two small wood furniture manufacturers and a representative of a trade association consisting primarily of small businesses. A Small Business Work Group was formed to specifically address small business issues.

In evaluating compliance options, the Committee tried to ensure that the compliance options would impose a minimum burden on small businesses. For example, presumptive RACT does not require the use of control devices that require a significant capital investment and impose an unfair burden on small businesses that typically have trouble raising capital. In addition, the Committee tried to ensure that the recordkeeping and reporting requirements of the proposed standards were not beyond the resources of small businesses.

The Committee also evaluated whether the proposed work practice standards presented any particular problems to small businesses. Some members felt that developing an operator training program might pose some problems to small businesses. Rather than exempt small businesses from what the Committee feels is a key work practice, the Committee decided to recommend that small business work together to develop a training program. The Committee also suggested that large businesses that already have

training programs in place could share the key components of those programs with small businesses. Finally, the Committee recommended that State small businesses assistance programs assist small businesses in developing their training program.

The Small Business Work Group made several recommendations to the Committee, including a recommendation that the EPA draft a document that would provide guidance to small businesses on how to obtain a Federally-enforceable limit on their potential to emit and recordkeeping requirements that might be associated with the limit. In addition, small business representatives proposed that the EPA draft a memorandum responding to questions developed by the Small Business Work Group pertaining to area sources that become major sources.

The EPA, California Air Pollution Control Officers Association, and the California Air Resources Board (CARB) have completed a model rule for use by the California Air Pollution Control Districts. Because the rule should prove to be an inexpensive and efficient means of limiting the potential emissions of thousands of sources, the EPA believes that parts of the rule may be helpful for other States to review and consider. The proposed rule is designed to place smaller sources under annual emissions limits which restrict their potential to emit and thus their exposure to major source requirements of the Clean Air Act. The rule ensures compliance through a series of recordkeeping and reporting requirements which are tapered to reduce burdens as source size decreases. The rule applies only to sources that agree to limit their emissions to 50 percent or less of the major source threshold. Sources with emissions above this level must either comply with all applicable major source requirements or secure a source-specific, Federally-enforceable Air Pollution Control District permit that properly limits emissions to below major source thresholds. Therefore, the rule is designed to provide smaller sources with a Federally-enforceable means of limiting their potential emissions.[5]

The Small Business Work Group also recommended that the EPA discuss in the preamble to the NESHAP the benefits of general

permits for small businesses and encourage their use where appropriate. The Agency agreed and a discussion of general permits is included in the NESHAP preamble. The Small Business Work Group also recommended that the EPA, in conjunction with the State of North Carolina Small Business Ombudsman Office, develop an information outreach program to serve as a resource for small wood furniture manufacturers. The Agency, has agreed to work with the North Carolina Small Business Ombudsman Office to develop this program.

5.6 REFERENCES FOR CHAPTER 5

1. Memorandum and attachment from Lingelbach, J., and S. Wildau, CDR Associates, to Wood Furniture Regulatory Negotiation Committee Members. October 27, 1994. Final Document and Signature Document.

2. Code of Federal Regulations. 40 CFR Part 63. Subparts F, G, H, and I. National emission standards for hazardous air pollutants (NESHAP) from synthetic organic chemical manufacturing industry equipment leaks. Promulgated April 22, 1994.

3. Code of Federal Regulations. 40 CFR Part 63. Subpart L. National emission standards for hazardous air pollutants for coke oven batteries. Promulgated October 27, 1993.

4. Code of Federal Regulations. 40 CFR Part 63. Subpart A. National emission standards for hazardous air pollutants for source categories--General Provisions. Promulgated March 16, 1994.

5. Memorandum and attachments from Seitz, J.S, and R.I. Van Heweler, EPA, to Director, Air, Pesticides, and Toxics Management Division, Regions I and IV, et al. January 25, 1995. Options for Limiting the Potential to Emit (PTE) of a Stationary Source Under Section 112 and Title V of the Clean Air Act.

6.0 COST, ENVIRONMENTAL, AND ENERGY IMPACTS

This chapter addresses the cost, environmental, and energy impacts of the RACT requirements for finishing and cleanup operations presented in Chapter 5. Typically, this chapter addresses the impact of each of the control options presented in Chapter 3. However, as discussed in Chapters 1 and 5, the presumptive norm for RACT for the wood furniture industry was developed through a negotiation process. Although options other than those agreed upon by the regulatory negotiation committee were discussed during the negotiation process, a detailed analysis of the impacts of those options was not prepared. Therefore, this chapter will focus on the impacts of the RACT requirements agreed upon by the Committee.

The EPA recognizes the need for States to have information on other control options and their impacts. The costs presented in this chapter are extrapolated from the costs developed for an earlier draft version of the CTG and a report prepared by the industry that addressed options for controlling VOC emissions from wood furniture finishing operations and the costs of those options.[1,2] Both the earlier version of the draft CTG and the industry report were begun before the industry and EPA agreed to negotiate the recommended RACT requirements. Therefore, both contain costs for other RACT options, although they are based on different model plants than the model plants presented in Chapter 4.

Section 6.1 of this chapter discusses the cost associated with each of the elements of the presumptive RACT requirements. Section 6.2 presents the total cost of meeting the presumptive RACT requirements by model plant, and Section 6.3 presents the

nationwide costs and emission reductions for facilities in nonattainment areas and the ozone transport region. Section 6.4 presents the environmental and energy impacts of the presumptive RACT requirements on the industry. Section 6.5 presents the costs of other control options based on data from EPA's earlier version of the draft CTG and industry's report. Section 6.6 presents a listing of the chapter references.

6.1 COST OF THE RECOMMENDED RACT OPTIONS

As discussed in Chapter 5, the RACT options agreed to by the Committee include limitations on the VOC content of the coatings that are used, a set of work practice standards which include restrictions on the type of application equipment that can be used, and other practices to reduce emissions from finishing, cleaning, and washoff operations. This section will discuss the costs associated with each of these requirements.

6.1.1 Limitation on VOC Content of Coatings

There are two technologies that the industry can use to meet the RACT requirements for coatings. A facility may choose to use (1) waterborne topcoats (or other topcoats with a VOC content less than or equal to the limit for waterborne topcoats), or (2) higher solids sealers and topcoats. The costs to the facility will vary according to the technology presently being used as well as the technology they choose to use to comply with RACT.

One characteristic common to both of the RACT coating options presented here, and to most lower VOC coating systems, is that the coatings have a higher solids content than conventional solventborne coatings. In instances where the quantity of solids applied to the piece (the build) determines how much coating is used, an increase in solids content results in a decrease in coating usage. This is the case with filler, sealer, and topcoat materials. In instances where the degree of color penetration (rather than build) determines how much coating is used, a higher solids content does not automatically result in decreased coating usage. This is the case with stains, washcoat, and highlight materials. In general, a facility switching to coatings that

meet either of the RACT options will decrease their annual coating usage.

Following is a discussion of the costs associated with each of the RACT options for coatings. All costs are presented in 1991 dollars.

6.1.1.1 Higher Solids Sealer and Topcoat. The only quantifiable cost to the industry for converting to higher solids sealers and topcoats is an increase in coating cost. In developing the costs for higher solids sealers and topcoats, it was assumed that the cost of the coating increases as the solids content increases. Based on information collected by EPA in developing the Automotive Plastic Parts CTG, the cost of the higher solids coating is equivalent to the ratio of the solids content of the higher solids coating to the baseline coating, plus 20 percent, multiplied by the cost of the baseline coating.[3] For example, if the baseline coating contains 2 lb solids/gal and the higher solids coating contains 4 lb solids/gal, then the cost of the higher solids coating will be 2.2 times the price of the baseline coating. Because a facility will use 50 percent less of the higher solids coating, the net effect is a 20 percent increase in coating cost. There may be other costs associated with the use of higher solids sealers and topcoats that can not be quantified, such as increased drying time. An increase in drying time would require modification of finishing lines and would lower productivity in terms of units produced in a given period of time.

6.1.1.2 Waterborne Topcoats. Although facilities may meet the 0.8 lb VOC/lb solids limitation on topcoats using technologies other than waterborne coatings, the costs associated with meeting the limit are based on facilities converting to waterborne topcoats. There are four major components included in the cost of converting to waterborne coatings including an increase in coating cost, increased drying capability, modifications to existing paint circulation systems, and material storage. The cost of each of these components is discussed in detail in the following paragraphs.

6.1.1.2.1 Coating costs. Facilities converting to waterborne topcoats will use approximately 20 percent less coating than baseline, due to the higher solids content of these waterborne coatings. However, there is still a net increase in coating cost because waterborne coatings cost more per gallon than the conventional solventborne coatings. According to the report prepared by industry, the average cost of all conventional solventborne coatings used by the industry is $7.50 per gallon while the average cost for waterborne coatings is $13.00 per gallon.[4] In calculating the cost of converting to waterborne topcoats, the cost of the waterborne topcoats was assumed to be $13.00 per gallon and the cost of all other coatings was assumed to be $7.50 per gallon.

6.1.1.2.2 Additional drying capability. Based on input from coating material suppliers, the use of waterborne coatings will require increased drying time, unless process modifications are made. These modifications may include additional ovens, increases in airflow rate, decreases in line speed, or increases in conveyor length. For the purposes of this analysis, it was assumed that increased drying requirements will be met by the addition of drying ovens.

According to vendor information, if a wood furniture manufacturer were to replace an oven, or obtain an additional oven, they would most likely purchase a turbolator oven.[5,6,7] These types of ovens offer a higher airflow rate than conventional convection ovens: 566 cubic meters per minute (m^3/min) [20,000 cubic feet per minute (ft^3/min)] compared to 85 m^3/min (3,000 ft^3/min) for conventional ovens. This higher airflow rate translates into increased drying capability. The vendors estimated the total installed capital cost of a new 20 foot turbolator oven at $48,600. A facility's operating costs will also increase with the addition of new ovens. Annual fuel and electricity costs for a turbolator oven are approximately $3,500 per oven.

In developing costs it was assumed that a new oven was required for all waterborne topcoat steps. For example,

facilities in the long spray model plant type, model plants 4, 5, and 6, have three topcoat applications, so it was assumed that they will need three new ovens. If a model plant has multiple lines, as do model plants 5 and 6, then an oven is needed for each topcoat application on each line. The exception to this is for the model plants representing the very small facilities, for example, model plant 4a. It was assumed that these facilities will only need one oven because they do not have tow lines or conveyors. Pieces are rolled into the spray booths on carts, finished, and then manually moved to the next spray booth. Multiple applications of the same coating step are often made in the same booth. Therefore, facilities in these model plants are likely to apply one topcoat step, place the piece in the oven to be dried, apply the next topcoat step, and place the piece back in the same oven.

6.1.1.2.3 Paint circulation systems. Facilities using waterborne coatings need to use passivated stainless steel delivery systems and mix tanks. In developing the cost of the required systems it was assumed that the very small and small model plants pump their coating materials directly from a drum (located at the spray booth) to the spray gun, that is, they do not have a central mix room. For the medium and large model plants it was assumed that a central pump room is used to supply all coating materials to the spray booths. For costing purposes, each booth is assumed to be an average of 200 feet from the mix room.[8]

For the very small and small model plants to use waterborne topcoats, the equipment used to transfer the coatings from the drum to the spray gun must be stainless steel. For these plants a modular passivated stainless steel paint delivery system is necessary. The components of this system include the following:

- stainless steel storage drum;
- fluid pump;
- drum cover elevator assembly;
- fluid regulator;
- fluid filter/strainer;

- fluid and air hoses;
- valves; and
- oil/water extractor for air supply.

Based on an average of vendor costs, the above modular stainless steel system has an estimated total installed capital cost of $9,100 per unit.[9,11] The 55 gallon stainless steel drum from which the coating material is pumped was assumed to be provided by the coating supplier.

For medium and large facilities, new passivated stainless steel paint circulation systems are necessary. Modifications are required in the mix room, at the spray booths, and with the material transfer lines. Changes in the mix room are required to accommodate waterborne coating material storage and agitation of the material, and for pumping and regulating coating materials. Based on vendor information, the following components are required in the mix room:

- stainless steel mix tank;
- fluid pump;
- agitator and lid assembly;
- hoses, regulators;
- back pressure valve with gauge; and
- filter/valves (to isolate filter)

Based on an average of costs supplied by vendors, the estimated installed capital cost of the mix tank is $25,600 and the total installed capital cost of the mix tank assembly (agitator, pumps, valves, hoses) is $8,800.[9-11] In developing model plant costs, it was assumed that one mix tank and mix tank assembly was required for each finishing line.

Equipment modifications are also required at the spray booth if waterborne coatings are used. For medium and large facilities, the following stainless steel equipment will be required at each spray booth:

- fluid valves;
- fluid regulator;
- fluid hose to gun;
- paint heater;

- air hose; and
- oil/water extractor for air supply.

Based on an average of cost information supplied by vendors, the total installed capital cost of the above equipment, except for the paint heater, is $1,400.[9,10] The paint heater is supplied separately at a total installed capital cost of $1,850. The above equipment is required at each booth using waterborne coatings.

In addition to mix room and spray booth equipment, the material transfer lines circulating between the mix room and spray booths would also need to be passivated stainless steel. Based on information supplied by vendors, the installed capital cost of stainless steel piping (304 grade or better) suitable for transferring coatings is estimated as $20/foot pipe.[12,13]

6.1.1.2.4 Material storage. According to industry representatives and furniture manufacturers, conventional solventborne coating material storage procedures vary according to the size of the facility.[14-21] Based on the information supplied by these sources, facilities in the very small and small model plants are assumed to store all coating materials in 55-gallon drums. Medium and large facilities store their color coats (stains, glazes, and highlights) in 55-gallon drums, but they store their solventborne clear coats (washcoat, sealer, and topcoat) in bulk tanks outside.

A very small or small facility converting to waterborne topcoats will not have to change their storage procedures. The coatings will continue to be stored in the containers in which they are shipped. However, a medium or large facility converting to waterborne topcoats will have to change their storage procedures. Waterborne coatings are susceptible to freezing so they can not be stored outside unless they are in a heated building. They are also more susceptible to contamination, so bulk storage is risky. Therefore, in developing costs, it was assumed that medium and large facilities converting to waterborne topcoats will have to purchase a 2-hour fire-rated building to store drums of waterborne coatings.

The total installed capital cost of the storage facilities is a function of the quantity of material to be stored. These costs were provided by vendors on a per drum basis.[22-24] Based on an average of costs provided by vendors, it was estimated that the installed capital cost of waterborne material storage is $380 per drum. The number of drums requiring storage was calculated for each model plant using the total amount of waterborne topcoat used by the model plant per year and assuming a monthly turnover rate. To allow for increased production, it was assumed that the building will be large enough to hold a 20 percent excess in capacity.

6.1.2 Application Equipment Requirements

There are three cost components associated with the application equipment requirements. These are the cost savings resulting from the decrease in coating usage, the capital costs of the application equipment, and an increase in labor costs for some plants.

As discussed in Chapter 5, presumptive RACT will require the industry to use application technologies other than conventional air spray. Conventional air spray can only be used for the limited circumstances discussed in Chapter 5. The presumptive RACT requirements do not mandate the application technology to be used. Airless, air assisted airless, high volume low pressure (HVLP), electrostatic, dipping, and roll/curtain coating are all application technologies that can be used. Most facilities are expected to move to HVLP application equipment to meet the requirements because it is generally considered to be more efficient than the other spray technologies, and it is not as limited in the applications for which it can be used as other technologies such as roll/curtain coating.[25] Therefore, the costs of the application equipment requirements are based on the industry switching to HVLP application equipment.

It is difficult to measure transfer efficiency because there are so many factors in addition to the type of application equipment that are involved. Therefore, it is difficult to assign a percentage reduction in coating usage resulting from a

change in application technology. The industry report assigned a 20 percent reduction in coating usage for facilities switching from conventional air to HVLP equipment.[25] The Pacific Northwest Pollution Prevention Research Center sponsored a testing program for evaluating the transfer efficiency of different types of application equipment under various scenarios. This report showed that the difference in transfer efficiency between HVLP and conventional air ranged from 0 percent to more than 30 percent.[26] In evaluating the cost of a facility changing from conventional air to HVLP application technology, it was assumed that coating usage will decrease 10 percent.

According to information supplied by vendors, the average cost of an HVLP spray gun is $400 installed.[27,28] In calculating the cost to the industry it was assumed that two guns will be purchased for each spray booth. The exception is for facilities using waterborne topcoats. As discussed in Chapter 5, the Committee agreed to exempt these coatings, and others with a VOC content less than 1 kg VOC/kg solids (1 lb VOC/lb solids), from the application equipment requirement. Therefore, facilities that convert to waterborne topcoats to meet the coating requirements of RACT will not have to switch to other application technologies to apply those coatings.

In addition to the capital cost of the application equipment, a facility may need additional spray booth operators to apply some coatings with HVLP application equipment. High volume low pressure spray guns have a slower delivery rate than conventional air guns. This slower delivery rate can be a problem when applying stains because they are formulated with faster evaporating solvents. To overcome this problem, a facility may need an additional operator for the stain booths. In developing the costs associated with a facility switching to HVLP spray equipment, it was assumed that all medium and large facilities will require two additional spray booth operators for the stain booths. It was assumed that smaller facilities will not require additional operators because many of these facilities

do not have tow lines and those that do typically move at lower speeds than the lines at medium and large facilities.

6.1.3 Work Practice Standards

The Committee agreed to a number of work practice standards to reduce VOC emissions from finishing, cleaning, and washoff operations. While it is assumed that these work practice standards will result in a decrease in coating, cleaning, and washoff solvent usage and will likely result in an overall savings to the facility, there is not enough data available to quantify either the reduction in emissions or costs associated with most of these standards. The exception is for the operator training requirements. Following is a discussion of the costs associated with these requirements.

As with the application equipment requirements, the reduction in coating usage that can be achieved by training spray booth operators and other employees that use solvent is difficult to quantify. However, the report from the Pacific Northwest Pollution Prevention Research Center shows that well trained spray booth operators can achieve higher transfer efficiencies with comparable spray equipment.[26] The Center compared the transfer efficiency achieved by expert painters with that achieved by novice painters. In almost every case, the expert painter achieved a higher transfer efficiency using the same equipment, with the difference ranging from 0 percent to almost 30 percent. For this analysis, it was assumed that spray booth operator training will result in a 5 percent decrease in coating usage, which will decrease the facility's coating costs.

While there will be a decrease in coating usage and costs due to the operator training requirements, there will be some labor costs associated with the requirements. For this analysis, it was assumed that 50 percent of the employees at a facility will need to be trained, (except for upholstery plants where only 25 percent are assumed to require training), and each of these employees will require 8 hours of training per year. It was assumed that only 50 percent of the employees will require training because many of the employees at a wood furniture

manufacturing facility are involved in assembly operations or provide clerical support. These employees do not use solvents and will not require training. While new employees may require more than 8 hours of training, it was assumed that these employees already receive some basic training so no more than an additional 8 hours of training will be required.

For facilities represented by the roll/curtain coat model plants, it was assumed that there will be no reduction in coating usage from the operator training requirements because these facilities do not use spray application equipment. However, employees in these facilities will still have to be trained because they handle coatings and solvents. The training requirements will reduce emissions, but the reduction has not been estimated because of a lack of available data. In estimating the costs of training, it was assumed that 50 percent of the employees at these facilities will have to be trained, but the training will be less comprehensive than training at other facilities and will only require 4 hours per year.

6.2 MODEL PLANT COSTS

The first step in evaluating the costs of the presumptive RACT requirements by model plant is to determine which option each model plant type is likely to use to meet the VOC content limitations on the coatings. As discussed earlier and in Chapter 5, a facility can choose to use topcoats with a VOC content less than 0.8 kg VOC/kg solids (0.8 lb VOC/lb solids) to meet the presumptive RACT requirements for coatings or they may choose to use higher solids sealers and topcoats with VOC contents less than or equal to 1.9 and 1.8 kg VOC/kg solids (1.9 and 1.8 lb VOC/lb solids), respectively. For facilities using conversion varnishes and vinyl sealers the limits are 2.0 and 2.3 kg VOC/kg solids (2.0 and 2.3 lb VOC/lb solids), respectively. Although each facility subject to the presumptive RACT requirements can choose the approach best suited to their product requirements, it is expected that some types of facilities are more likely to choose to use waterborne topcoats and some are more likely to choose higher solids sealers and

topcoats. In developing the model plant costs, it was assumed that some model plant types will use waterborne topcoats to meet the presumptive RACT requirements for coatings and some will use higher solids sealers and topcoats to meet the requirements.

In developing the cost of the VOC limitation on coatings by model plant, it was assumed that facilities in the short spray, roll/curtain coat, and kitchen cabinet model plant types will use higher solids sealers and topcoats to meet the RACT requirements. The majority of kitchen cabinet manufacturers already use vinyl sealers and conversion varnishes so it was assumed that they will choose to meet the RACT requirements by using topcoats with a VOC content less than or equal to 2.0 kg VOC/kg solids (2.0 lb VOC/lb solids) and sealers with a VOC content less than or equal to 2.3 kg VOC/kg solids (2.3 lb VOC/lb solids). The conversion varnishes used by these facilities already meet the 2.0 kg VOC/kg solids (2.0 lb VOC/lb solids) limit, so the only cost and emission reduction for these facilities resulting from the coating limitations will come from reformulating their sealers to meet the 2.3 kg VOC/kg solids (2.3 lb VOC/lb solids) limit.

Facilities in the roll/curtain coat model plants already use sealers and topcoats that meet the higher solids limits of 1.8 kg VOC/kg solids (1.8 lb VOC/lb solids) for topcoats and 1.9 kg VOC/kg solids (1.9 lb VOC/lb solids) for sealers. Therefore, these facilities will incur no cost in meeting the VOC limits for these coatings.

Facilities in the short spray model plant type can choose to meet the VOC limitation on coatings by using waterborne topcoats, or their equivalent, or higher solids sealers and topcoats. In developing costs, it was assumed that these facilities will choose to meet the RACT requirements for coatings by reformulating to higher solids sealers and topcoats. Many of the facilities represented by the short spray model plant type already use slightly higher solids coatings than those used by the long spray facilities. Manufacturers of office furniture and public building furniture, (SIC codes 2521 and 2531), typically use acid-catalyzed coatings that are higher in solids than the

conventional nitrocellulose lacquers used by much of the industry, manufacturers of store fixtures use higher solids basecoats and enamels. These facilities need coatings that are tougher and more resistant to chemicals and scratching, and the higher solids coatings provide these characteristics. Therefore, it is likely that these facilities will meet the presumptive RACT requirements for coatings by converting to higher solids coatings, and the costs and emission reductions were calculated using this assumption.

It was assumed that facilities represented by the long spray and upholstered model plant types will choose to use waterborne topcoats to meet the presumptive RACT requirements for coatings. Several of the facilities manufacturing upholstered furniture that responded to EPA's survey had already moved to waterborne coatings. These facilities are likely to convert to waterborne coatings because they would not experience some of the same problems of other facilities. As discussed earlier, waterborne coatings dry more slowly than solventborne coatings. This slower drying is less likely to be a problem in facilities manufacturing upholstered furniture because most of these facilities are like small facilities in that the pieces to be finished are moved manually from booth to booth, rather than on a tow line or automated conveyor. Therefore, the additional drying time that is required for waterborne coatings is not as much of a problem for upholstered furniture operations as it is for facilities with automated lines. Therefore, the costs and emission reductions for upholstered furniture facilities were calculated assuming they switch to waterborne topcoats.

Facilities represented by the long spray model plant currently use nitrocellulose sealers and topcoats that are lower in solids than the sealers and topcoats used by the other model plant types. Conversion to higher solids sealers and topcoats may be more difficult for them than for the model plant types already using higher solids coatings. In addition, the higher solids coatings may not provide them with the required aesthetics. Therefore, these facilities are expected to convert

to waterborne topcoats to meet the presumptive RACT requirements, and the costs and emission reductions were calculated using this assumption.

Table 6-1 presents the costs for the model plants converting to higher solids sealers and topcoats to meet the VOC limitation on coatings. Table 6-2 presents the costs for the model plants converting to waterborne topcoats to meet the limits. The total annual costs and the cost effectiveness for each model plant are presented in Table 6-3.

The total capital cost in Table 6-3 is based on the total capital cost of HVLP guns, total capital cost of additional drying capacity, total capital cost of the paint circulation system, and total capital cost of coating material storage. The total annualized capital cost is based on a 10 year lifetime and 10 percent interest. The total operating cost is based on labor cost, incremental annual coating cost, incremental fuel and electric cost for ovens, incremental disposal cost for waterborne coatings, and taxes, insurance, and administrative costs (4 percent of total capital cost). The total annual cost is the sum of the total operating cost and the total annualized capital cost. Costs to implement the presumptive RACT requirements for the model plants range from a cost savings of more than $900/Mg to a cost of over $3,600/Mg.

6.3 NATIONWIDE IMPACTS OF PRESUMPTIVE RACTS

Nationwide cost impacts and emission reductions were estimated for the presumptive RACT options. The CTG will only apply to wood furniture facilities located in ozone nonattainment areas and in the ozone transport region. Therefore, to calculate nationwide cost impacts and emission reductions, the total number of facilities located in nonattainment areas and the ozone transport region was estimated. In developing the distribution of facilities in nonattainment areas and the ozone transport region, a relationship between the total number of employees and the size of the facility was developed. Table 6-4 presents the distribution of plants by model plant number for plants in nonattainment areas and the ozone transport region. This table

TABLE 6-1. COST BY MODEL PLANT FOR PLANTS CONVERTING TO HIGHER SOLIDS SEALER AND TOPCOAT[a]

	Model plant											
	1a	1	2	3	7a	7	8	9	11a	11	12	13
Low-VOC coating costs												
Incremental annual coating cost, $	15,451	30,903	92,398	134,969	0	0	0	0	4,410	13,229	32,626	50,719
Application equipment costs												
Incremental annual coating cost, $	(10,939)	(21,878)	(65,452)	(95,584)	N/A	N/A	N/A	N/A	(7,949)	(23,845)	(58,815)	(91,412)
Labor cost, $[b]	0	0	70,720	70,720	N/A	N/A	N/A	N/A	0	0	70,720	70,720
Total capital cost of HVLP guns, $	3,456	3,456	7,776	7,776	N/A	N/A	N/A	N/A	2,592	2,592	5,184	5,184
Operator training costs												
Incremental annual coating cost, $	(4,992)	(9,845)	(29,454)	(43,013)	0	0	0	0	(3,577)	(10,731)	(26,467)	(41,135)
Labor cost, $[b]	5,375	12,447	26,591	42,432	2,687	6,223	13,295	21,216	2,546	5,375	12,447	28,288

[a]All costs are presented in 1991 dollars.
[b]Include operating labor at $8.50/hr, supervisory labor equivalent to 15 percent of operating labor at $17/hour, and overhead at 60 percent of total labor.

TABLE 6-2. COST BY MODEL PLANT FOR PLANTS CONVERTING TO WATERBORNE TOPCOATS[a]

	Model plant				
	4a	4	5	6	10
Low-VOC coating costs					
Incremental annual coating cost, $	11,056	26,060	75,416	110,559	21,640
Incremental disposal cost-waterborne coatings, $	632	1,489	4,309	6,317	1,078
Total capital cost of additional drying capacity, $	48,600	145,800	291,600	291,600	48,600
Incremental fuel and electric cost for ovens, $	3,470	10,410	20,820	20,820	3,470
Total capital cost of paint circulation system, $	9,100	27,300	121,044	121,044	9,100
Total capital cost of coating material storage, $	0	0	17,100	25,080	0
Application equipment costs					
Incremental annual coating cost, $	(4,391)	(10,350)	(29,925)	(43,898)	(8,438)
Labor cost, $[b]	0	0	141,400	141,400	0
Total capital cost of HVLP guns, $	5,184	6,048	14,688	14,668	2,592
Operator training costs					
Incremental annual coating cost, $	(4,455)	(10,498)	(30,371)	(44,537)	(7,410)
Labor cost, $[b]	5,375	12,447	26,591	42,432	8,911

[a]All costs are presented in 1991 dollars.
[b]Includes operating labor at $8.50/hr, supervisory labor equivalent to 15 percent of operating labor at $17/hr, and overhead at 60 percent of total labor.

TABLE 6-3. MODEL PLANT CONTROL COSTS FOR PRESUMPTIVE RACT[a]

Model plant	Total capital cost, $	Total annualized capital cost, $[b]	Total operating cost, $/yr	Total annual cost, $/yr	Total VOC reductions, Mg/yr	Cost effectiveness, $/Mg
1a	3,456	492	5,103	5,595	18.1	309
1	3,456	492	11,765	12,257	36.2	337
2	7,776	1,107	95,114	96,221	108.3	887
3	7,776	1,107	109,835	110,942	158.2	701
4a	62,884	8,955	14,202	23,157	11.7	1,979
4	179,148	25,511	36,724	62,234	27.6	2,255
5	444,432	63,287	226,057	289,344	79.8	3,626
6	452,412	64,423	251,230	315,653	117.1	2,696
7a	0	0	2,687	2,687	0.0	N/A
7	0	0	6,223	6,223	0.0	N/A
8	0	0	13,295	13,295	0.0	N/A
9	0	0	21,216	21,216	0.0	N/A
10	60,292	8,586	21,663	30,221	19.1	1,584
11a	2,592	369	(4,466)	(4,097)	5.8	(706)
11	2,592	369	(15,868)	(15,499)	17.2	(901)
12	5,184	738	30,718	31,456	42.4	742
13	5,184	738	17,387	18,126	66.0	275

[a]All costs are presented in 1991 dollars.
[b]Annualized capital cost based on a 10 year lifetime and 10 percent interest (a capital recovery factor = 0.1424).

TABLE 6-4. DISTRIBUTION OF WOOD FURNITURE PLANTS IN NONATTAINMENT AREAS BY MODEL PLANT

Model plant	VOC range, tons	SIC code	Employee range[a]	No. plants in employee range[b]	No. plants in nonattainment areas[c]	Percent SIC in model plant type	No. of model plant types in nonattainment areas	Percent of plants that finish[a]	Total affected plants, CTG
1a	25-65	2511	20-99	555	328	33	108	100	108
		2519	20-99	46	34	50	17	75	13
		2521	50-99	45	28	47	13	100	13
		2531	50-99	50	22	82	18	70	13
		2541	50-99	93	66	80	53	100	53
1	65-160	2511	100-249	155	88	33	29	100	29
		2519	100-249	13	7	50	4	75	3
		2521	100-499	49	29	47	14	100	14
		2531	199-249	32	12	82	10	70	7
		2541	100-499	65	40	80	32	100	32
2	160-325	2511	250-499	76	15	33	5	100	5
		2519	250-499	3	0	50	0	75	0
		2521	500-999	4	3	47	1	100	1
		2531	250-499	9	3	82	2	70	2
		2541	500-999	0	0	80	0	100	0
3	>325	2511	>500	47	8	33	3	100	3
		2519	>500	1	0	50	0	75	0
		2521	>1,000	1	0	47	0	100	0
		2531	>500	4	3	82	2	70	2
		2541	>1,000	0	0	80	0	100	0
4a	25-65	2511	20-99	555	328	67	220	100	220
		2517	20-99	27	18	67	12	100	12
		2519	20-99	46	34	50	17	75	13
		2521	50-99	45	28	48	13	100	13
		2531	50-99	50	22	9	2	70	1
4	65-160	2511	100-249	155	88	67	59	100	59
		2517	100-249	3	2	67	1	100	1
		2519	100-249	13	7	50	4	75	3
		2521	100-249	49	29	48	14	100	14
		2531	100-249	32	12	9	1	70	1

TABLE 6-4. (continued)

Model plant	VOC range, tons	SIC code	Employee range[a]	No. plants in employee range[b]	No. plants in nonattainment areas[c]	Percent SIC in model plant type	No. of model plant types in nonattainment areas	Percent of plants that finish[a]	Total affected plants, CTG
5	160-325	2511	250-499	76	15	67	10	100	10
		2517	250-499	5	2	67	1	100	1
		2519	250-499	3	0	50	0	75	0
		2521	500-999	4	3	48	1	100	1
		2531	250-499	9	3	9	0	70	0
6	>325	2511	>500	47	8	67	5	100	5
		2517	>500	4	1	67	1	100	1
		2519	>500	1	0	50	0	75	0
		2521	>1,000	1	0	48	0	100	0
		2531	>500	4	3	9	0	70	0
7a	25-50	2434	20-49	313	165	16	26	100	26
		2517	20-99	27	18	33	6	100	6
		2521	50-99	45	28	5	1	100	1
		2531	50-99	50	22	9	2	70	1
		2541	50-99	93	66	20	13	100	13
7	50-150	2434	50-99	103	58	16	9	100	9
		2517	100-249	3	2	33	1	100	1
		2521	100-499	49	29	5	1	100	1
		2531	100-249	32	12	9	1	70	1
		2541	100-499	65	40	20	8	100	8
8	150-300	2434	100-249	58	23	16	4	100	4
		2517	250-499	5	2	33	1	100	1
		2521	500-999	4	3	5	0	100	0
		2531	250-499	9	3	9	0	70	0
		2541	500-999	0	0	20	0	100	0
9	>300	2434	>250	15	6	16	1	100	1
		2517	>500	4	1	33	0	100	0
		2521	>1,000	1	0	5	0	100	0
		2531	>500	4	3	9	0	70	0
		2541	>1,000	0	0	20	0	100	0
10	>25	2512	>100	182	42	100	42	60	25

TABLE 6-4. (continued)

Model plant	VOC range, tons	SIC code	Employee range[a]	No. plants in employee range[b]	No. plants in nonattainment areas[c]	Percent SIC in model plant type	No. of model plant types in nonattainment areas	Percent of plants that finish[a]	Total affected plants, CTG
11a	25-50	2434	20-49	313	165	84	139	100	139
11	50-100	2434	50-99	103	58	84	49	100	49
12	100-250	2434	100-249	58	23	84	19	100	19
13	>250	2434	>250	15	6	84	5	100	5
Total									963

[a]Based on data collected from EPA's survey of the wood furniture industry.
[b]1987 Census of Manufactures data base showing distribution of facilities by SIC code, size, and county.
[c]Compiled using 1987 Census of Manufacturers data base and EPA 1991 data base of nonattainment areas by county. Total includes facilities in States in ozone transport region.

was developed using the distribution of facilities in EPA's data base, the 1987 Census of Manufactures data base that provides information on plant location by county, and EPA's 1991 data base of attainment and nonattainment areas. Plants located in the ozone transport region, which includes the States of Connecticut, Delaware, Maine, Maryland, Massachusetts, New Hampshire, New Jersey, New York, Pennsylvania, Rhode Island, Vermont, and the consolidated metropolitan statistical area that includes the District of Columbia and some counties in Virginia are also included in the table.

The distribution of facilities in Table 6-4 includes only those facilities that are considered to be large enough, based on EPA's survey of the industry, to emit greater than or equal to 22.7 Mg (25 tons) of VOC's per year. As discussed in Chapter 5, the Committee recommended that RACT be applied to facilities that emit, or have the potential to emit, greater than or equal to 22.7 Mg (25 tons) of VOC's per year. The Committee recommended that an exception be made for facilities located in extreme nonattainment areas. For these facilities, the Committee recommended that RACT be applied to facilities that emit, greater than or equal to 9.1 Mg (10 tons) of VOC's per year.

6.3.1 Nationwide Emission Reductions

Table 6-5 presents baseline and controlled VOC emissions by model plant for facilities located in nonattainment areas and the ozone transport region. Controlled emissions represent the level of emissions after the application of the presumptive RACT requirements. The emission reductions achieved by the limitation on the VOC content of the coatings assumes that some model plant types will choose to use higher solids sealers and topcoats to meet the limitation, and some model plant types will choose to use waterborne topcoats, or their equivalent, to meet the limitation. In determining the emission reductions achieved by the coating VOC limitations, it was assumed that plants represented by the short spray (model plants 1a - 3), roll/ curtain coat (7a - 9), and kitchen cabinet (11a - 13) model plant types would convert to higher solids sealers and topcoats.

TABLE 6-5. BASELINE AND CONTROLLED VOC EMISSIONS[a]

Model plant No.	Nationwide VOC emissions baseline--total, Mg/yr	Nationwide VOC emissions controlled--total, Mg/yr	Nationwide reductions in VOC emissions from baseline, Mg/yr
1a	7,801	4,179	3,622
1	6,631	3,544	3,087
2	1,867	999	868
3	1,704	910	794
4a	8,951	5,911	3,040
4	6,352	4,194	2,158
5	2,827	1,867	960
6	2,073	1,369	704
7a	1,347	1,347	0
7	1,291	1,291	0
8	1,030	1,030	0
9	363	363	0
10	1,401	923	478
11a	4,042	3,232	810
11	4,275	3,428	847
12	4,089	3,282	807
13	1,673	1,342	331
Total	57,718	39,213	18,505

[a]Emissions correspond to those plants located in ozone nonattainment areas and transport regions. Controlled emissions represent those after the application of presumptive RACT.

Further, it was assumed that plants represented by the long spray (model plants 4a - 6), and upholstered (model plant 10) model plant types would convert to waterborne topcoats. These are the same assumptions that were used in developing the costs for each model plant. The basis for these assumptions was discussed in Section 6.2.

As shown in Table 6-5, the presumptive norm for RACT will reduce VOC emissions from major sources in nonattainment areas and the ozone transport region by 18,505 Mg (20,335 tons). Additional reductions may be achieved by application of the work practice standards, but these potential reductions, with the exception of reductions associated with the application equipment and operator training requirements, have not been estimated for the reasons discussed in Section 6.1.3.

6.3.2 Nationwide Costs

Table 6-6 presents the nationwide costs and cost effectiveness of implementing the presumptive RACT requirements to sources that are expected to be subject to RACT located in nonattainment areas and the ozone transport region. These costs were calculated using the total annual costs by model plant presented in Table 6-3 and the distribution of plants by model plant presented in Table 6-4. The cost of implementing the recommended RACT requirements to all affected sources in the wood furniture industry is $20,156,609 and the cost effectiveness is $1,089/Mg.

6.4 ENVIRONMENTAL AND ENERGY IMPACTS

There are a number of potential environmental and energy impacts associated with the recommended RACT requirements. Environmental impacts, including effects on air and water quality, as well as hazardous wastes, are discussed in Section 6.4.1. The energy impacts of the recommended RACT requirements are presented in Section 6.4.2, and other environmental impacts are discussed in Section 6.4.3.

6.4.1 Environmental Impacts

6.4.1.1 Air Quality Impacts. As discussed in Section 6.3.1, the application of presumptive RACT by source

TABLE 6-6. NATIONWIDE CONTROL COSTS FOR PRESUMPTIVE RACT[a]

Model plant No.	Nationwide control cost, $	Nationwide reduction in VOC emissions, Mg/yr	Cost effectiveness, $/Mg
1a	1,119,000	3,622	309
1	1,041,845	3,087	337
2	769,768	868	888
3	554,710	794	701
4a	5,997,663	3,040	1,979
4	4,854,252	2,158	2,255
5	3,472,128	960	3,626
6	1,893,918	704	2,696
7a	126,289	0	N/A
7	124,460	0	N/A
8	66,475	0	N/A
9	21,216	0	N/A
10	755,525	478	1,584
11a	(569,483)	810	(706)
11	(759,451)	847	(901)
12	597,664	807	742
13	90,630	331	275
Total	20,156,609	18,505	1,089

[a]Costs and emission reductions correspond to applying presumptive RACT to those facilities in ozone nonattainment areas and transport regions. All costs are presented in 1991 dollars. Numbers in parentheses indicate a net savings.

facilities in nonattainment areas and the ozone transport region will reduce VOC emissions from the industry by 18,505 Mg/yr (20,335 tons/yr) from the estimated baseline value of 57,718 Mg/yr (65,426 tons/yr).

As discussed in Chapter 1, the EPA is also developing a NESHAP for the wood furniture industry and the requirements for both the CTG and NESHAP were negotiated by the Committee. Because the work practice standards and the application equipment requirements are part of both the presumptive RACT requirements and the NESHAP, for most model plants, the RACT requirements will not result in HAP emission reductions in addition to those achieved by the NESHAP. However, the NESHAP will not apply to most of the very small plants (represented by model plants 1a, 4a, 7a, and 11a), although these plants will be subject to RACT. Therefore, the presumptive RACT requirements will also reduce HAP emissions from these plants.

The limitation on the VOC content of the coatings may result in some decrease in HAP emissions but the decrease can not be quantified. The majority of the HAP that will be regulated by the NESHAP are VOC. The NESHAP limits the HAP content of the stains, washcoats, sealers, and topcoats to 1.0 kg organic HAP/kg solids (1 lb organic HAP/lb solids). Therefore, facilities converting to waterborne topcoats, which have a VOC limit of 0.8 kg VOC/kg solids (0.8 lb VOC/lb solids) (which is equivalent to no more than 0.8 kg organic HAP/kg solids (0.8 lb organic HAP/lb solids)), will be decreasing their HAP emissions from their topcoats by at least 20 percent more than required by the NESHAP. Smaller facilities not covered by the NESHAP that are subject to RACT and choose to convert to waterborne topcoats will likely reduce their HAP emissions from topcoats substantially. Total HAP emissions from facilities converting to higher solids sealers and topcoats will likely decrease.

6.4.1.2 Water Quality Impacts. No adverse water pollution impacts are expected to result from the implementation of the presumptive RACT requirements. For this analysis, it was assumed that a constantly recirculating coating delivery system will be

used with waterborne coatings. Thus, the use of waterborne coatings is not expected to increase flushing of the lines and will therefore not result in increased wastewater.

6.4.1.3 Hazardous Waste. Both solid and liquid hazardous waste are generated at most wood furniture manufacturing facilities. The dry filters used to collect coating overspray account for the majority of the solid hazardous waste generated. Although the solids content of lower-VOC coatings is higher, less of the coating is used, so the frequency of changing these dry filters is not expected to change if lower-VOC coatings are used.

The liquid hazardous waste generated by a wood furniture facility consists primarily of spent solvent and coatings. The work practice standards should reduce the amount of solvent used and the application equipment requirements should reduce the amount of coating used, so the presumptive RACT requirements should result in a decrease in liquid hazardous waste.

6.4.2 Energy Impacts

The additional ovens required for facilities converting to waterborne topcoats will result in an increase in both electricity and natural gas use. The increase in energy usage associated with the conversion to waterborne topcoats is summarized in Table 6-7.

TABLE 6-7. ENERGY USE ASSOCIATED WITH WATERBORNE TOPCOATS[5-7]

Model plant No.	Increase in natural gas usage, MMBtu/yr	Increase in electricity usage, kWh/yr
4a	181,300	3,108
4	163,800	2,808
5	50,400	864
6	25,200	432
10	17,500	300

6.4.3 Other Environmental Impacts

The use of waterborne coatings and higher solids coatings will reduce worker exposure to organic solvents. The worker

training requirements and work practice requirements such as closed containers and the limit on the amount of solvent used for spray booth cleaning should also reduce solvent usage and worker exposure.

Facilities may choose to use polyester or polyurethane coatings that meet the VOC content limitations for higher solids topcoats. These coatings contain small amounts of isocyanates, so additional safety procedures may be required. If the appropriate precautions are taken, no additional risk to the worker is expected to result.

The presumptive RACT requirements require facilities to purchase additional equipment. This is considered an irreversible and irretrievable commitment of resources. Manufacturing stainless steel paint circulation lines, storage tanks, and ovens will consume steel and other raw materials. However, compared to the current level of use of these materials by the industry, this increase in consumption is not considered significant.

6.5 IMPACTS OF OTHER CONTROL OPTIONS

As discussed earlier, this chapter of a typical CTG addresses the impacts, both environmental and cost, of a number of control options. These impacts are then used in making a determination of RACT for the industry. In addition to evaluating the impacts of a number of options in order to make a determination of what the EPA believes is RACT, the analysis of several options provides States with guidance they can use in writing their own rules. For example, a particular State may decide that the presumptive norm for RACT does not result in sufficient emission reduction from plants in that State. If an analysis of more stringent options has been conducted by EPA in developing the CTG, the State can use this analysis to develop a more stringent rule.

In this case, however, the presumptive RACT requirements were developed through a negotiation process. During the negotiation, several other options besides those finally chosen were discussed, but a complete analysis of the impacts of those

options was not conducted. While Chapter 3 provides a detailed discussion of the available control options for the wood furniture industry, it does not address the industry impacts associated with implementing those control options.

Before beginning the negotiation of the presumptive norm for RACT, EPA had already begun development of a CTG for the wood furniture industry. Drafts of several of the chapters, including the cost chapter, had already been completed. The cost chapter in the earlier draft CTG evaluated the impacts of many of the control options discussed in Chapter 3. While EPA was developing the CTG, the industry developed their own report that evaluated the impacts of control options for reducing VOC emissions from the industry. Both the earlier draft CTG and the industry report addressed some of the same control options. The CTG evaluated the impacts of add-on controls, hybrid and full waterborne coating systems. The industry report also evaluated the impacts of add-on controls and hybrid and full waterborne coating systems.

In order to provide States with some guidance on the potential impacts of control options other than those selected by the Committee as the presumptive norm for RACT, a summary of the impacts of these three additional control options is presented here. The summary includes both EPA's estimate of the impacts, as presented in the earlier draft version of the CTG, and industry's estimate of the impacts, as presented in their report. In evaluating the summary of the impacts presented here, the reviewer should note that the model plants used in developing the impacts for both the earlier version of the draft CTG and the industry report are different than the model plants presented in Chapter 4. A summary of the model plants contained in the industry report is presented in Table 6-8. Table 6-9 presents a summary of the model plants from the earlier version of the draft CTG. The model plants presented in Chapter 4 are based on some of the model plants presented in the industry report, but they are scaled to represent a range of facility sizes. The model plants developed for the earlier version of the draft CTG are

TABLE 6-8. INDUSTRY REPORT MODEL PLANTS[2]

Model plant No.	Type of product	No. of employees	Finishing process	No. of finishing steps	Type of topcoat	VOC emissions from finishing, Mg/yr
1	Casegoods	10-238	Assemble then finish	10-14	Nitrocellulose lacquer	95
2	Casegoods	250-455	Assemble then finish	<, = 10	Nitrocellulose lacquer	321
3	Casegoods	284-484	Print on flat line, assemble, then finish on spray line	Print <, = 9 Finish <, = 10	Nitrocellulose lacquer	375
4	Specialized casegoods	120-217	Assemble then finish	15+	Nitrocellulose lacquer	42
5	Chairs	325-389	Assemble then finish	<, = 9	Catalyzed or uncatalyzed nitrocellulose lacquer	286
6	Not reported	140	Flat line; finish then assemble	<, = 6	Catalyzed nitrocellulose lacquer	66
7	Furniture	800	Print on flat line, finish on flat line, assemble or ship K.D.	Print - 8 Finish - 5	Catalyzed or uncatalyzed nitrocellulose lacquer	368
8	Not reported	105-212	Assemble then finish	4	Catalyzed nitrocellulose lacquer	111
9	Not reported	159-225	Assemble then finish or finish then assemble	<, = 4	Catalyzed nitrocellulose lacquer	117
10	Not reported	123-549	Flat line; finish then assemble	3	Catalyzed varnish	349
11	Miscellaneous wood parts and products	108-215	Not reported	<, = 7	Catalyzed or uncatalyzed nitrocellulose lacquer	30
12	Miscellaneous wood parts and products	258-375	Not reported	<, = 7	Catalyzed or uncatalyzed nitrocellulose lacquer	88

TABLE 6-9. EARLIER DRAFT CTG MODEL PLANTS[1]

Model plant No.	Type of product	No. of employees	No. of finishing steps	Type of topcoat	VOC emissions from finishing, Mg/yr
1	Residential furniture	<100	6	Nitrocellulose lacquer	45
2	Residential furniture	100-249	6	Nitrocellulose lacquer	204
3	Residential furniture	>249	6	Nitrocellulose lacquer	454
4	Residential furniture	<100	10	Nitrocellulose lacquer	45
5	Residential furniture	100-249	10	Nitrocellulose lacquer	204
6	Residential furniture	>249	10	Nitrocellulose lacquer	454
7	Office furniture and kitchen cabinets	<100	3	Catalyzed	45
8	Office furniture and kitchen cabinets	100-249	3	Catalyzed	204
9	Office furniture and kitchen cabinets	>249	3	Catalyzed	454
10	Office furniture and kitchen cabinets	100-249	3	Catalyzed	204
11	Office furniture and kitchen cabinets	>249	3	Catalyzed	454

similar to the model plants presented in Chapter 4, so a comparison of the impacts is reasonable.

The cost information from the earlier draft CTG and the industry report is presented for informational purposes. However, a direct comparison of the costs from the earlier draft CTG and the industry report must be done cautiously. First, the model plants evaluated in the two reports were slightly different (as can be seen by comparing Tables 6-8 and 6-9). For purposes of this section, costs for "equivalent" model plants are presented, but it is important to note that model plants in the two reports are not identical and that judgment was used in determining "equivalent" model plants. Secondly, the assumptions made in estimating the costs associated with the use of add-on controls and reformulated coatings were different in the two reports. These differing assumptions led to different estimates of costs. Only total estimated costs and emission reductions are presented in this section; a detailed discussion of the assumptions used in developing the costs is not provided. For additional information concerning the development of these costs, the reader is referenced to the earlier draft CTG, the industry report, Appendix C, and a memorandum comparing the two reports.[1,2,29]

6.5.1 Hybrid Waterborne

Both the earlier draft version of the CTG and the industry report evaluated the impacts of the industry converting to a hybrid waterborne coating system. The number of coating steps in a hybrid waterborne system that are waterborne depends upon the finishing sequence. For example, for a short finishing sequence (stain, sealer, and topcoat) the sealer and topcoat are waterborne coatings. For a long finishing sequence (stain, washcoat, filler, glaze, sealer, and multiple topcoat applications) all coating steps after the washcoat are waterborne. The industry report and the earlier draft version of the CTG both indicated that hybrid waterborne was technically feasible for all of their model plants. Table 6-10 presents the emission reduction and cost effectiveness for hybrid waterborne

TABLE 6-10. EMISSION REDUCTIONS AND COST EFFECTIVENESS OF HYBRID WATERBORNE COATING SYSTEM[1,2]

	Model plant No.[a]											
	1	2	3	4	5	6	7	8	9	10	11	12
Industry report[2]												
Percent reduction--VOC emissions	48	50	59	61	47	54	85	30	32	36	33	28
Cost effectiveness, $/Mg[b]	5,577	2,846	2,461	5,689	3,075	6,068	(521)	4,756	3,199	2,060	12,976	7,290
Earlier draft CTG[1]												
Percent reduction--VOC emissions	59	59	59	54	54	54	55	56	56	55	56	N/A
Cost effectiveness, $/Mg[b]	1,483	1,305	1,270	1,562	1,550	1,272	2,800	2,694	2,556	2,542	2,451	N/A

[a]Model plant numbers correspond to the model plants described in Tables 6-8 and 6-9. These model plant numbers do not directly correspond to those presented in Chapter 4.
[b]All costs are in 1991 dollars.

systems for both the industry and earlier draft CTG model plants. As shown in the table, a hybrid waterborne system can reduce emissions by 28 to 85 percent at a cost effectiveness ranging from a cost savings of $521/Mg to a cost of almost $13,000/Mg.

6.5.2 Full Waterborne

In a full waterborne coating system, all coatings are waterborne coatings. The earlier draft CTG and the industry report agree that a full waterborne coating system is not technically feasible for all model plants. The earlier draft CTG indicates that a full waterborne system is not technically feasible for facilities manufacturing residential furniture with a long finishing sequence. According to the industry report, a full waterborne system is technically feasible only for model plants representing facilities with short finishing sequences. Two of the industry model plants with short finishing sequences represent facilities that finish and then assemble their furniture, and two represent facilities that manufacture miscellaneous wood parts and products.

Table 6-11 presents the emission reduction and cost effectiveness for a full waterborne system for the model plants in the industry report and the earlier draft CTG for which the technology was considered feasible. As shown in the table, the emission reduction from a full waterborne system ranges from 60 to 93 percent, with a cost effectiveness ranging from $2,100/Mg to more than $9,500/Mg.

6.5.3 Add-On Controls

As discussed in Chapter 3, there are several types of add-on control devices that can be used by the industry to reduce VOC emissions from coating operations. These include recuperative thermal incinerators, regenerative thermal incinerators, fixed-bed catalytic incinerators, fluidized-bed catalytic incinerators, and a combination of carbon adsorbers and incinerators. The industry report evaluated the feasibility and impacts of each of these options, and concluded that add-on control devices were technically feasible for each of their model plants. The earlier draft version of the CTG also evaluated the

TABLE 6-11. EMISSION REDUCTIONS AND COST EFFECTIVENESS OF FULL WATERBORNE COATING SYSTEM[1,2]

	Model plant No.[a]											
	1	2	3	4	5	6	7	8	9	10	11	12
Industry report[2]												
Percent reduction--VOC emissions	N/A	N/A	N/A	N/A	N/A	78	93	N/A	N/A	N/A	64	60
Cost effectiveness, $/Mg[b]	N/A	N/A	N/A	N/A	N/A	5,248	(483)	N/A	N/A	N/A	9,597	5,705
Earlier draft CTG[1]												
Percent reduction--VOC emissions	88	88	88	N/A	N/A	N/A	80	80	80	80	80	N/A
Cost effectiveness, $/Mg[b]	2,139	2,170	2,128	N/A	N/A	N/A	3,269	3,186	3,087	3,070	2,993	N/A

[a]Model plant numbers correspond to the model plants described in Tables 6-8 and 6-9. These model plant numbers do not directly correspond to those presented in Chapter 4.

[b]All costs are in 1991 dollars.

feasibility and impacts of a number of add-on control devices, including recuperative and regenerative thermal incinerators, catalytic incinerators, and a combination of carbon adsorbers and thermal incinerators. The earlier draft CTG also concluded that add-on controls were technically feasible for each of their model plants, although, as in the industry report, some types of add-on controls were not considered feasible for some model plants.

Table 6-12 presents the emission reduction and cost effectiveness for add-on control devices taken from the industry report and earlier draft CTG. The values presented represent the most cost effective add-on control device for each model plant. As shown in the table, the emission reduction achieved by add-on controls ranges from 67 to 98 percent, and the cost effectiveness ranges from $527/Mg to more than $25,000/Mg.

TABLE 6-12. EMISSION REDUCTIONS AND COST EFFECTIVENESS OF ADD-ON CONTROL DEVICES[1,2]

	Model plant No.[a]											
	1	2	3	4	5	6	7	8	9	10	11	12
Industry report[2]												
Percent reduction--VOC emissions	72	74	59	75	83	85	67	83	85	86	76	85
Cost effectiveness, $/Mg[b]	13,116	4,550	3,917	25,467	3,538	7,963	3,659	3,889	3,652	1,598	23,478	8,332
Earlier draft CTG[1]												
Percent reduction--VOC emissions	98	95	95	98	95	95	98	95	95	95	95	N/A
Cost effectiveness, $/Mg[b]	3 845	3,074	2 592	3,845	3,074	2,592	4,166	3,141	2,590	1,124	527	N/A

[a]Model plant numbers correspond to the model plants described in Tables 6-8 and 6-9. These model plant numbers do not directly correspond to those presented in Chapter 4

[b]All costs are in 1991 dollars

6.6 REFERENCES FOR CHAPTER 6

1. Control of VOC Emissions from Wood Furniture Coating Operations - Draft Chapters 1 - 5 of Control Techniques Guideline. U. S. Environmental Protection Agency. Research Triangle Park, NC. October 1991.

2. ENSR Consulting and Engineering. An Evaluation of VOC Emissions Control Technologies for the Wood Furniture and Cabinet Industries. Prepared for the American Furniture Manufacturers Association, Business and Institutional Furniture Manufacturers Association, Kitchen Cabinet Manufacturers Association, and the National Paint and Coatings Association. January 1992.

3. Alternative Control Techniques Document: Surface Coating of Automotive/Transportation and Business Machine Plastic Parts. U. S. Environmental Protection Agency, Research Triangle Park, NC. EPA 453\R-94-017. February 1994.

4. Ref. 2, pp. 7-3, 7-4.

5. Telecon. Christie, S., Midwest Research Institute, with Miller, D., George Koch & Sons, Inc. August 6, 1991. Oven costs.

6. Telecon. Christie, S., Midwest Research Institute, with Rhodes, A., Rhodes Machinery. August 6, 1991. Oven costs.

7. Telecon. Christie, S., Midwest Research Institute, with DiGibani, C., Binks Manufacturing, Inc. August 6, 1991. Oven costs.

8. Telecon. Christie, S., Midwest Research Institute, with Runyan, L., American Furniture Manufacturer's Association. July 29, 1991. Stainless steel paint circulation systems.

9. Telecon. Christie, S., Midwest Research Institute, with Moser, R., Binks Manufacturing. August 12, 1991. Stainless steel paint circulation systems.

10. Letter and attachments from Daignault, C., Nordson Corporation, to Christie, S., Midwest Research Institute. August 28, 1991. Stainless steel paint circulation systems.

11. Telecon. Christie, S., Midwest Research Institute, with Muir, G., Graco, Incorporated. July 24, 1991. Stainless steel paint circulation systems.

12. Telecon. Christie, S., Midwest Research Institute, with Oxler, W., U. S. Engineering. August 9, 1991. Stainless steel paint circulation systems.

13. Telecon. Caldwell, M. J., Midwest Research Institute, with Kish, S., Graco Incorporated. August 13, 1991. Stainless steel paint circulation systems.

14. Memorandum from Christie, S., Midwest Research Institute, to Moseley, R., Hickory Chair. Trip report: Observation of waterborne coatings test.

15. Telecon. Christie, S., Midwest Research Institute, with Perry, S., Business and Institutional Furniture Manufacturers Association. July 15, 1991. Coating material storage procedures.

16. Telecon. Christie, S., Midwest Research Institute, with Titus, R., Kitchen Cabinet Manufacturers Association. July 16, 1991. Coating material storage procedures.

17. Telecon. Christie, S., Midwest Research Institute, with Bombay, E., Kraftmaid Cabinetry, Inc. July 15, 1991. Coating material storage and transfer procedures.

18. Telecon. Christie, S., Midwest Research Institute, with Butterfield, G., Merillat, Inc. July 25, 1991. Coating material storage and transfer procedures.

19. Telecon. Christie, S., Midwest Research Institute, with Moseley, R., Hickory Chair. July 15, 1991. Coating material storage procedures.

20. Telecon. Christie, S., Midwest Research Institute, with Sale, W., Broyhill Furniture Industries. July 15, 1991. Coating material storage and transfer procedures.

21. Telecon. Christie, S., Midwest Research Institute, with Bublitz, T., Herman Miller, Incorporated. July 29, 1991. Coating material storage and transfer procedures.

22. Letter and attachments from Schurr, D., Safety Storage, Inc., to Christie, S., Midwest Research Institute. August 14, 1991. Coating material storage costs.

23. Telecon. Christie, S., Midwest Research Institute, with Stanwyck, W., Precision Quincy Corporation. August 7, 1991. Coating material storage costs.

24. Telecon. Christie, S., Midwest Research Institute, with Osborne, J., Osborne Environmental. August 7, 1991. Coating material storage costs.

25. Ref. 2, p. 7-44.

26. Transfer Efficiency and VOC Emissions of Spray Gun and Coating Technologies in Wood Finishing. Pacific Northwest Pollution Prevention Research Center. Seattle, WA. 1992. p. 5.

27. Survey response and attachments from Binks Manufacturing Company, to Caldwell, M. J. Midwest Research Institute. March 29, 1990.

28. Survey response and attachments from Graco, Inc. to Caldwell, M. J., Midwest Research Institute. March 26, 1990.

29. Memorandum from M. Caldwell, Midwest Research Institute, to Project file. February 29, 1992. Joint Industry Steering Committee Report Summary.

7.0 RACT IMPLEMENTATION

7.1 INTRODUCTION

This chapter presents information for air quality management agencies to consider in the development of an enforceable rule limiting volatile organic compound (VOC) emissions from wood furniture operations. Information is provided on important definitions, rule applicability, format of standards, performance testing and monitoring, and reporting and recordkeeping. Where several options exist for implementing a certain aspect of the rule, each option is discussed along with its advantages and disadvantages. In some cases, there may be other equally valid options. The State or other implementing agency can exercise its prerogative to consider other options provided that they meet the objectives prescribed in this chapter.

This guidance is for instructional purposes only and, as such, is not binding. Appendix B contains an example rule incorporating the guidance provided in this document. The example rule provides an organizational framework and sample regulatory language specifically tailored for wood furniture operations. The example rule is also not intended to be binding. The State or other enforcement agency should consider all information presented in this document along with additional information about specific sources to which the rule will apply. The reasonably available control technology (RACT) rule, however, should address all the factors listed in this chapter and in Chapter 5 to ensure that the rule has reasonable provisions for demonstrating compliance and is enforceable.

7.2 DEFINITIONS

The RACT rule should accurately describe the types of sources that would be affected and clearly define terms used to describe the industry or applicable control methods. Example definitions of pertinent terms are presented in Appendix B for reference by the enforcement agency when drafting a RACT regulation for wood furniture operations., These definitions are intended to offer guidance to agencies in selecting terms that may need to be clarified when used in a regulatory context. The definitions in Appendix B have been compiled using both industry and EPA sources.

7.3 APPLICABILITY

The recommended RACT described in this document applies to any facility that finishes wood furniture, or performs cleaning or washoff associated with wood furniture finishing operations. The wood furniture industry is described in more detail in Chapter 2. For purposes of this CTG, wood furniture can be summarized as:

1. Residential (household) furniture - including upholstered furniture and casegoods such as beds, bookcases, chairs, tables, couches, etc., as well as reed and rattan and other wicker furniture, and garden and lawn furniture;

2. Cabinets - including kitchen, bath, stereo, radio, sewing machine, and television cabinets;

3. Wood office furniture - including bookcases, cabinets, benches, chairs, desks, tables, and other furniture;

4. Public building and related furniture - including benches, blackboards, bleachers, chairs and church furniture; and

5. Wood office and store fixtures, partitions, shelving, and lockers.

The nine SIC codes considered in the CTG analysis are presented in Chapter 2 and in the model rule. Any rule based on the CTG could include all or a portion of these nine SIC codes, as well as any other coating processes the regulatory agency believes are best described as a wood furniture manufacturing operation.

This guidance applies to in-house wood finishing processes located at a manufacturing site. It applies to finishing operations that involve the prefinishing of individual components, which may then be assembled elsewhere within the facility or sent to another facility for final finishing and/or assembly. It also applies to the finishing of unassembled and assembled pieces that are manufactured both onsite and offsite. The guidance only applies to the wood finishing processes--other processes such as metal coating are not covered. A furniture finishing line processes wood furniture pieces composed primarily of wood; however, some of the components of the piece may be plastic, metal, or other materials which need to be given a finish appearance of simulated wood. This guidance does apply where either the piece to be finished requires a simulated wood appearance or where the finished surface area of the piece to be finished is mostly wood. Similarly, the guidance does not apply to other operations that may occur in the facility such as gluing and particleboard manufacturing.

The emission points covered are the finishing, cleaning, and washoff operations. The finishing operation includes the finishing application area, flashoff areas, curing ovens, and assorted cooldown zones. Emissions can occur throughout the entire finishing operation. Finishing operation-related cleaning includes application equipment cleanup, process equipment cleaning, and spray booth cleaning. Cleaning operations occur primarily in the application area, though miscellaneous cleaning operations may occur along any part of the finishing operation. Washoff operations are also covered by the model rule. Washoff includes the removal of finishing material from a piece of furniture that does not meet specifications.

The presumptive norm that has been selected as RACT applies differently depending on the type of topcoat and sealer that is used. Sources that use acid-cured alkyd amino conversion varnish topcoats and acid-cured alkyd amino vinyl sealers have different requirements for higher-solids coatings than those sources that use conventional topcoats and sealers. (See related discussion

in Chapter 5.) Enforcement agencies may choose to evaluate sources within their jurisdiction to determine the extent to which sources using conversion varnishes and vinyl sealers actually differ from those using conventional topcoats and sealers.

As indicated in the model rule in Appendix B, this guidance has been developed for affected sources in areas of marginal, moderate, serious, or severe nonattainment that have the potential to emit greater than or equal to 25 tons per year (tons/yr) of VOC's. The guidance is intended to apply to affected sources in extreme areas, however, if potential VOC emissions are greater than or equal to 10 tons/yr. The enforcement agency has the flexibility to apply RACT as deemed necessary. For example, an agency may apply RACT to all sources that have the potential to emit greater than or equal to 10 tons/yr of VOC's.

7.4 FORMAT OF STANDARDS

The selected RACT contains two elements: emission standards limiting the VOC content of coatings and work practice standards. The VOC content should be calculated as-applied to account for in-house dilution of coatings purchased from an outside source.

To incorporate some flexibility, the model rule allows sources to use either an averaging approach or add-on air pollution control equipment to meet the RACT requirements. To use an add-on control device, the source must demonstrate, through the use of a series of calculations, that they are achieving an emission reduction equivalent to that achieved by sources using compliant coatings

Sources using an averaging approach must demonstrate that their emissions are no greater than 90 percent of what they would be if they were using compliant coatings. Section B.4(a)(4) of the model rule provides guidance on how to determine if the source is achieving the required emission reduction. The model rule contains extensive guidance for States that decide to allow averaging as a method of demonstrating compliance. However, States have the option of not allowing an averaging approach to

be used. They can also place limitations on the averaging program if they wish to do so. For example, they may limit averaging to facilities of a certain size, limit the number of coatings that can be averaged, or they could limit the amount of time a source could use averaging in anticipation that, in the future, compliant coatings will be available for every situation.

The baseline for each finishing material included in the averaging program shall be the lower of the actual or allowable emission rate as of the effective date of the State's RACT rule. For example, if the source is already using a 0.3 lb VOC/lb solids topcoat, they are not entitled to 0.5 lb VOC/lb solids trading credits. Methods used in determining the usage of each finishing material shall be accurate enough to ensure that the affected source's actual emissions are less than the allowable emissions, as calculated using Equation 1 or 2 in B.4(a)(4), on a daily basis to a level of certainty comparable to that for traditional control strategies applicable to surface coating sources.

The recommended RACT also contains many work practices that are believed to limit emissions from finishing, cleaning, and washoff operations. Work practices are recommended when physically measuring emissions from a source is impossible or at least impracticable. The work practices that were selected as RACT are practices that are being employed in the source category, but for which emission limits could not be assigned. A disadvantage of the format of work practice standards is that it is difficult to demonstrate equivalence. If a State wishes to use alternate standards to the work practice standards, the burden is on the State to demonstrate to the EPA Administrator that the standards are equivalent.

7.5 COMPLIANCE AND MONITORING PROVISIONS

7.5.1 Compliance Provisions

Regardless of the format selected by the enforcement agency, compliance and monitoring provisions are essential to confirm that an affected source is in compliance with a rule, and to determine whether compliance is continuous or intermittent. The

compliance provisions in the model rule in Appendix B were developed assuming that the rule would follow the format of a limit on the lb VOC/lb solids of specific coatings, but alternate compliance provisions may be appropriate for standards that are in a different format. The compliance provisions should account for the various control methods that affected sources may use to comply with the rule. For example, in the model rule, compliance provisions are identified depending on whether any of the following control methods are used: (1) compliant coatings; (2) averaging; or (3) an air pollution control system consisting of a capture and control device.

Sources using compliant coatings demonstrate compliance by maintaining records of the certified product data sheets for the VOC content of the as-supplied coating and data sheets demonstrating how the as-applied value for the coating was calculated. Attachment 3 of the model rule provides guidance to States on potential compliance provisions for sources using an averaging approach to comply with the rule. The States should use this guidance in developing their averaging programs for submittal to the Administrator for approval. At a minimum, sources using an averaging approach must submit the results of the calculations from inequalities (1) or (2) in Section B.4(a)(4) of the model rule and data on daily coating usage and VOC content that support the calculations.

The model rule recognizes that the overall control efficiency of an air pollution control system is dependent upon both the capture and control efficiency. Therefore, it is important that any rule contain provisions for determining both. There are two methods available to determine the capture efficiency associated with an air pollution control system. One method is to perform a capture efficiency test on the capture system used to direct emissions to the add-on control device. A second method is to demonstrate that a capture system meets EPA's total enclosure criteria, and is therefore assigned a capture efficiency of 100 percent. Both methods are presented in the model rule. In the wood furniture industry, sources may operate

individual spray booths or groups of booths within an enclosure, or they may operate the entire finishing room as an enclosure. The test methods in the model rule can be applied to any of these situations.

Depending upon the conditions at a test site, one of the following test methods from 40 CFR Part 60, Appendix A, should be used to determine the inlet and outlet VOC concentrations of a gas stream sent to a control device, and thus, the control efficiency of the device:

1. EPA Method 18;
2. EPA Method 25; or
3. EPA Method 25A.

The method selected should be based on consideration of the diversity of organic species present and their total concentration and on consideration of the potential presence of interfering gases. Because of the different response factors for the many organic compounds which may be present either in the coatings or as a result of the combustion process, EPA Method 25 or 25A, which measure total VOC as carbon, should be used for determining destruction efficiency of thermal incinerators, catalytic incinerators, or combined adsorption/thermal incineration systems when the stream constituents are well known. However, EPA Method 18 is more appropriate for speciating organic emissions when the presence of pollutants is more ambiguous. Because EPA Method 18 is more sophisticated, associated costs are generally higher.

The following test methods are used in conjunction with the VOC measurement methods identified above:

1. EPA Methods 1 or 1A of 40 CFR Part 60, Appendix A, should be used for velocity traverses;
2. EPA Methods 2, 2A, 2C, or 2D of 40 CFR Part 60, Appendix A should be used for velocity and volumetric flow rates;
3. EPA Methods 3 or 3A of 40 CFR Part 60, Appendix A, should be used for O_2, and CO_2 analysis; and
4. EPA Method 4 of 40 CFR Part 60, Appendix A, should be used for stack gas moisture.

7.5.2 Monitoring Requirements

Under the amended Act, paragraph (3) to Section 114(c) requires enhanced monitoring of stationary sources to indicate the compliance status of the source, and whether compliance is continuous or intermittent. The enhanced monitoring provisions have been codified in 40 CFR Part 64. The model rule in Appendix B has been developed to account for situations in which either compliant coatings, averaging, or an add-on control device are used, and incorporates the concepts of enhanced monitoring. In this industry, it is likely that the majority of sources will use compliant coatings to comply with the recommended RACT; add-on control devices will be used in very limited situations. The monitoring requirements of the model rule reflect this premise.

The continuous compliance monitoring methods that are identified in the model rule for sources using add-on control devices are consistent with previous regulations developed by the EPA. Agencies responsible for enforcing RACT may choose other methods as long as they meet the enhanced monitoring provisions of 40 CFR Part 64. For example, the model rule identifies continuous parameter monitoring for sources using add-on controls; specifically, sources using incinerators must continuously monitor the combustion temperature. It has been shown that lower temperatures can cause significant decreases in combustion control device efficiency. Temperature monitors with strip charts and flow indicators are relatively inexpensive and easy to operate Flow indicators confirm that the streams are being routed to the incinerators In the model rule, operation at a combustion temperature less than the value established for compliance during the initial compliance test for any 3-hour period constitutes noncompliance with the standard.

Another option would be to require the use of continuous emission monitors (CEM's) on the inlet and outlet gas stream so that a percent destruction efficiency could be continuously monitored Or, an outlet CEM could be used, with the outlet concentration serving as the operating parameter to be monitored (the value of the outlet concentration could not exceed that

established during the initial performance test). For incinerators, the EPA believes that temperature monitoring is a good determination of compliance and is considerably less expensive than operating CEM's. Another factor that agencies must consider in establishing compliance provisions is the averaging time over which compliance will be determined. For example, in the model rule, sources using add-on controls must average the operating parameter value over each 3-hour period to determine compliance or noncompliance with the standard. In the model rule, compliance monitoring is identified only for incinerators and carbon adsorbers because other types of add-on control devices are not likely to be used for compliance. If an alternate control device is expected to be used by affected sources within an agency's jurisdiction, the rule may include compliance provisions appropriate for that device as well.

The model rule also recognizes that the overall control efficiency of a control system does not depend only on the destruction efficiency of the device but on the capture efficiency as well. The model rule identifies the methods to be used to demonstrate that the capture efficiency measured during the initial test is continuously maintained. The provisions contained in the model rule require monitoring of an operating parameter that verifies that the capture system is operating at the same efficiency as it was during the initial compliance test. The amount of air the fans are directing to the control device could be used as an indicator of the relative capture efficiency. Continuous measurement of the airflow from each of the areas exhausted to the control device (each spray booth, oven, etc.) is one suggestion. Whichever parameter is measured as an indicator of capture efficiency, it should be measured during the initial performance test, a minimum or maximum value established (as appropriate), and continuous monitoring should be compared to this value.

As previously stated, most affected sources are expected to meet the requirements of RACT by using the compliant coatings that are the presumptive norm. Initial and ongoing compliance

for these sources are demonstrated through reporting and recordkeeping requirements. When compliance is achieved through the use of compliant coatings, EPA believes that reporting and recordkeeping to demonstrate continuous compliance fulfill enhanced monitoring requirements. Enforcement agencies may develop innovative techniques for determining the compliance status of sources using compliant coatings; these are appropriate provided they meet the enhanced monitoring requirements of 40 CFR Part 64.

Attachment 3 of the model rule provides guidance to States on potential monitoring requirements for sources using an averaging approach to comply with the rule. The States should use this guidance in developing their averaging programs for submittal to the Administrator for approval.

The model rule requires semiannual reporting of a source's compliance status when compliant coatings are used. Specifically, sources using compliant coatings or spray booth materials must submit a semiannual compliance certification that states that the materials documented in the certified product data sheet are the ones actually being used. The EPA has identified semiannual reporting in the model rule because direct emission measurement is not being required, yet the records and reports are being used directly for compliance determinations. Other enforcement agencies should consider the reporting frequency they consider necessary for determining the compliance status of a source, and should also explore how this reporting will compare with that required as part of the Title V operating permit program Small business impacts should also be considered.

The model rule contains compliance provisions for the work practice standards as well. The EPA thought it necessary to identify compliance provisions for the work practice standards because much of the emission reduction that will be achieved by the proposed rule is through the work practice standards. Obviously, direct measurement of emissions is not appropriate because emission points being controlled by work practices are

the facility certifies that the source is in continuous compliance. (This concept is discussed in more detail below.)

Sources should also maintain records associated with the work practice implementation plan, including records showing the date each operator was trained, records associated with the leak inspection and maintenance plan, and records associated with the application equipment requirements. As discussed in Section 7.6, initial compliance may be demonstrated by submitting the work practice implementation plan. Continuous compliance may be demonstrated by sources if they submit a certification statement that reports that the work practice implementation plan has been followed as written, whether changes were made and the reasons for these changes, and any actions that were taken to correct actions performed contrary to the constraints of the plan.

In the model rule, semiannual compliance certifications are required for sources that use compliant materials, and for sources demonstrating compliance with the work practice implementation plan. The authority for requiring these compliance certifications is found in paragraph (3) to Section 114(c), and is analogous to the compliance certification required by the Parts 70 and 71 operating permit programs. Therefore, the compliance certification required by this proposed rule is consistent with other regulatory actions that may also apply to the affected sources.

Sources that use add-on air pollution control systems to meet RACT requirements will require different types of reporting and recordkeeping than sources using compliant coatings. Enforcement agencies should refer to the General Provisions (Subpart A) to Part 63 (the MACT standards). These provisions identify the types of records and reports that are appropriate when add-on control systems are used and monitoring is required. For example, these provisions cover performance test reporting; compliance monitoring system records; startup, shutdown, and malfunction provisions; reports of exceedances; and summary reports certifying no excess emissions.

not point sources that emit through a stack. The model rule requires all of the recordkeeping associated with work practices to be included in the work practice implementation plan. The way continuous compliance is ensured in the model rule is through a semiannual compliance certification that states that the work practice implementation plan is being followed.

7.6 REPORTING AND RECORDKEEPING

Each facility subject to RACT requirements should keep records of certain key parameters that would determine initial and continuous compliance. To accomplish this, the model rule requires an initial compliance report, with subsequent compliance reports submitted on a semiannual basis. Regardless of the type of reports required by a rule, some basic information should be conveyed to the enforcement agency. First, the facility should identify the control method selected to meet the RACT requirements. Next, the results of any performance testing should be recorded. Further, the facility should record all parameters monitored on a routine basis to indicate continued compliance with the RACT emission limit. These parameters differ depending on the means by which the RACT requirements are met. Any exceedances of the monitored parameters also should be recorded along with any corrective actions taken.

Records should be kept to demonstrate that coating materials comply with VOC content limits for each regulated category of material. The affected source should maintain a certified product data sheet for each coating subject to the emission limitations. They should also maintain records of the VOC and solids content, as applied, of each coating. Sources using an averaging approach must keep the above records as well as records of the quantity of each material used, and the emission calculations that demonstrate equivalence. As stated in Section 7.6, an initial report may be used to convey the above information to demonstrate initial compliance, and the information then reported on a semiannual basis to demonstrate continuous compliance. The semiannual reports may take the form of compliance certifications in which a responsible official at

APPENDIX A

CONTACTS

COATING SUPPLIERS

AEXCEL Corporation
7373 Production Drive
Mentor, OH 44061-0780
Mr. Richard Milhem

Akzo Nobel Coating, Inc.
P. O. Box 2124
High Point, NC 27261
Mr. Gerry M. Currier
Mr. Bob Matejka

Alternative Materials
Technology, Inc.
1266 Humboldt Avenue
Chico, CA 95928
Mr. Bill Malligie

Ameron Corporation
P. O. Box 192610
Little Rock, AR 72219-2610
Mr. Mike Harris

Amity Finishing Products
P. O. Box 107
Sun Prairie, WI 53590
Mr. George Cash

Avery--Decorative Films Div.
650 West 67th Place
Schererville, IN 46375
Mr. Greg Emily

C. E. Bradley Laboratories, Inc.
P. O. Box 811
Battleboro, VT 05301
Mr. Rasheed H. Kanaan

Cardinal Industrial Finishes
1329 Potrero Avenue
South El Monte, CA 91733
Mr. Sam Ortolono

Chemcraft Sadolin International,
Inc.
P. O. Box 669
Walkertown, NC 27051
Mr. Gary Marshall

Crown Metro, Inc.
P. O. Box 2910
Lenoir, NC 28645
Mr. Greg Sprole

Guardsman Chemicals, Inc.
2147 Brevard Road
High Point, NC 27261-1029
Mr. Ron Tucker

Hood Products, Inc.
P. O. Box 163
Freehold, NJ 07728
Mr. Eric Kasner

James B. Day & Company
Day Lane
Carpentersville, IL 60110
Mr. Steven J. Plumley

Lawrence McFadden Company
7430 State Road
Philadelphia, PA 19136
Mr. Peter Beck

Lilly Industries, Inc.
733 South West Street
Indianapolis, IN 46225
Mr. Bill Dorris

Lilly Industries, Inc.
P. O. Box 2358
High Point, NC 27261
Mr. Archie Martz

PPG Industries, Inc.
7601 Business Park Drive
Greensboro, NC 27409
Mr. Andy Riedell

Pratt & Lambert
Industrial Coatings Division
16116 East 13th Street
Wichita, KS 67230
Mr. Wallace A. Steele

Radcure, Inc.
217 Freedman Drive
Port Washington, WI 53074-0247
Mr. Keith Clark

Reneer Films Corporation
Old Hickory Road
Auburn, PA 17922
Ms. Wendy Steed

Snyder Brothers
Avon Street
Toccoa, GA 30577
Mr. Len Snyder

Spruance Southern, Inc.
Old Highway 52 South
Winston-Salem, NC 27107
Mr. David King

U. S. Cellulose
520 Parrott
San Jose, CA
Ms. Jennifer O'Hara

Union Carbide Corporation
39 Old Ridgebury Road L-4
Danbury, CT 06817
Mr. Thayer West

Valspar Corporation
1647 English Road
High Point, NC 27261
Mr. James Bohannon

RESIN SUPPLIERS

Aqualon/Hercules
1313 N. Market St.
Wilmington, DE 19899-8740
Mr. John Devido

Cargill
2301 Crosby Road
Wayzeta, MN 55391
Mr. Al Heitkamp

Ciba Geigy
3 Skyline Drive
Hawthorne, NY 10532-2188
Mr. William Collins

Dow Chemical Company
2040 Willard H. Dow Center
Midland, MI 48674
Ms. Karen Krigbaum

Eastman Chemicals
Eastman Road
Kingsport, TN 37660
Mr. Jeff Powell

ICI Resins
1717 Rivermist Drive
Lilburn, GA 30247

Mr. Edward Elkins

Mobay Corporation
Mobay Road
Pittsburgh, PA 15205-9741
Dr. Bernd H. Riberi

Mobil Oil Corporation
3225 Gallows Road
Fairfax, VA 22037
Mr. Bill Press

PPG Industries
Greensboro Customer Service Lab
7601 Business Park Drive
Greensboro, NC 27409

Reichhold Chemicals, Inc.
525-T North Broadway
White Plains, NY 10603
Mr. Jeffrey Dannerman

Rohm and Haas
Independence Mall West
Philadelphia, PA 19105
Mr. Pete Nicholson

Sanncor Industries
300 Whitney Street
Leominster, MA 01453
Mr. Henry Merken

FURNITURE MANUFACTURERS

Allied Wood Industries
P. O. Box 1823
Southern Pines, NC 28387
Mr. David Allen

American Woodmark Corporation
Rt. 220 South, Industrial Pk.
Moorefield, WV 26836
Mr. Bob Taylor

Aristokraft, Inc.
1 AristoKraft Square
Jasper, IN 47546
Mr. Dave Hurst

Basset Furniture Industries, Inc.
Main St., P. O. Box 626
Bassett, VA 24955
Mr. Mike Nelson

Bernhardt Furniture Company
P. O. Box 740
Lenoir, NC 28645
Mr. Buck Deal
Mr. Dean Reid

Broyhill Furniture Industries, Inc
1 Broyhill Park
Lenoir, NC 28633
Mr William Sale

Corrections Industries
Penitentiary of New Mexico
Santa Fe, NM
Mr. L. D. Alexander

Daniel Peters Woodworking
2056 Lock Haven Drive
Roanoke, VA 24019
Mr. Daniel Peters

Elite Furniture Restoration
P. O. Box 623
Toluca, IL 61369
Mr. Don Scrivner

Ethan Allen, Inc.
P. O. Box 639
Old Fort, NC 28762
Mr. Mickey C Keefe

Fieldstone Cabinetry, Inc.
Highway 105 East
Northwood, IA 50459
Mr. Steve Teunis

Florida Furniture Industries, Inc.
P. O. Box 610
Palatka, FL 32177
Mr. Fount Rion, Jr.

Henkel-Harris Company, Inc.
P. O. Box 2170
Winchester, VA 22601
Mr. Rex Davis

Henrendon
P. O. Box 70
Morgantown, NC 28655
Mr. Paul (Buck) Smith

Herman Miller, Inc.
8500 Byron Road
Zeeland, MI 49464
Mr. Paul Murray

HON Industries Technical Center
505 Ford Avenue
Muscatine IA 52761
Mr. Scott Lesnet

Hickory Chair
37 9th St. Pl. S.E.
Hickory, NC 28603
Mr. Richard Mosley

Kincaid Furniture Company
P. O. Box 605
Hudson, NC 28638
Mr. Mike Soots
Mr Rick Penley

Kitchen Kompact
P. O. Box 868
Jeffersonville, IN 47131
Mr. Walt Gahm

KraftMaid Cabinetry
16052 Industrial Parkway
Middlefield, OH 27711
Mr Byron Bombay

McGuire Furniture
1201 Bryant Street
San Francisco, CA 94103
Mr. Randy Shepard

Masco Corporation
21001 Van Born Road
Taylor, MI 48180
Dr. Paul Eisele, PhD

Merillat Industries, Inc.
P. O. Box 1946
Adrian, MI 49221
Mr. Gary Butterfield

Mills Pride, Inc.
423 Hopewell Road
Waverly, OH 45690
Ms. Debra Hannah

O'Sullivan Industries, Inc.
1900 Gulf Street
Lamar, MI 64759
Mr. Ralph Williston

Platform Beds, Inc.
400 North First Street
Grants, NM 87020
R. T. Miller

Pulaski Furniture Corporation
P. O. Box 3431
Martinsville, VA 24115

Pridgen Cabinet Works
Route 2, Box 36
Whiteville, NC 28472
Jack Burgess

Stanley Furniture
Highway 57 West
Stanleytown, VA 24168
Mr. Alex Teglas

Steelcase
P. O. Box 1967/CS-2S08
Grand Rapids, MI 49501
Mr. Phil Schneider

Stow & Davis Wood Division
Cane Creek Industrial Park
Fletcher, NC 28732
Mr. L. T. Ward

Stylecraft Corporation
P. O. Box 458
Blue Ball, PA 17506
Mr. David Rothermel

Terra Furniture
17855 Arenth Avenue
City of Industry, CA 91744
Mr. Gary Stafford

The Bartley Collection, Ltd
3 Airpark Drive
Easton, MD 21601
Mr. Joe Layman

The Knoll Group
Water Street
East Greenville, PA 18041
Mr. Lou Newett

The Lane Company, Altavista
Operations
Box 151
Altavista, VA 24517-0151
Mr. Jon Parish

Thomasville Furniture
Industries, Inc.
P. O. Box 339
Thomasville, NC 27361
Mr. Dave Masters

Vaughn Furniture
P. O. Box 1489
Galax, VA 24333
Mr. Pres Turbyfill

Vintage Piano Company
P. O. Box 51347
Chicago, IL 60651
Mr. John Gonzalves

Virginia House Furniture Corp.
P. O. Box 138
Arkins, VA 24311
Mr. Randall Sparger

Wambold Furniture
6800 Smith Road
Simi Valley, CA 93063
Mr. Mark Trexler

WCI Cabinet Group
701 South N Street
Richmond, IN 47374
Mr. Bob Livesay

Wood-Mode Cabinetry
1 Second Street
Kreamer, PA 17833
Mr. Gronlund

WoodCo Incorporated
5225 Quast Avenue. N.E.
Rodgers, MN 55374
Mr. Rick Wood

WoodMark Manufacturing
No. 4, Sapona Business Park
Lexington, NC 27292
Mr. Ellis Murphy

APPLICATION SYSTEMS VENDORS

Air Power, Inc.
P. O. Box 41165
Raleigh, NC 27629
Mr. Ron Lowe

Apollo Sprayers International, Inc.
10200 Hemstead Highway
Houston, TX 77092
Mr. Paul McClure

Binks Manufacturing Company
9201 W. Belmont Avenue
Franklin Park, IL 60131
Mr. Rick Campobasso

CAN-AM Engineered Products, Inc.
30850 Industrial Road
Livonia, MI 48150
Mr. M. H. Bunnell

DeVilbiss Company
300 Phillips Avenue
Toledo, OH 43692
Ms. Nancy Lieber

Graco, Inc.
24775 Crestview Court
Farmington Hills, MI 48335
Mr. Peter Bankert

Graco, Inc.
4050 Olsen Memorial Highway
Minneapolis, MN 55440-1441
Mr. Glenn Muir

Graco, Inc.
9451 W. Belmont
Franklin Park, IL 60131-2891
Mr. Steven Kish

High Point Pneumatics
Box 5802
High Point, NC 27262-5802
Mr. Wayne Roach

Kremlin, Inc.
211 South Lombard
Addison, IL 60101
Mr. Ken Ehrenhofer

Nordson Corporation
1321 Cedar Drive
Thomasville, NC 27360
Mr. John Collett

Nordson Corporation
555 Jackson Street
Amherst, OH 44001
Ms. Cindy Daignault

Paint-O-Matic
Box 1426
Willits, CA 65490
Mr. Ron Budish

Ransburg, Inc.
3939 West 56th Street
Indianapolis, IN 46208
Mr. Loren Simonson

S. A. Services
P. O. Box 129
Dudley, NC 28333
Mr. Fred McLeod

Speedflo Manufacturing Corporation
4631 Winfield Road
Houston, TX 77039
Mr. Dave Masterson

Stiles Machinery
3965 44th Street Southeast
Grand Rapids, MI 49508
A. J. Stranges

The DeVilbiss Co.
300 Phillips Ave., P. O. Box 913
Toledo, OH 43692-0913
Mr. John Truschill

Union Carbide Chemicals
6230 Fairview Road
Charlotte, NC 28210-3297
Ms. Renee Morgan

Volstatic, Inc.
7960 Kentucky Drive
Florence, KY 41042
Mr. James Baugh

Wagner Spray Tech Corporation
1770 Fernbrook Lane
Minneapolis, MN 55447
Mr. Gale Finstad

ADD-ON CONTROL VENDORS

ABB Flakt Alpha
29333 Stephenson Hwy.
Madison Heights, MI 48071

Baron-Blakeslee
2003 North Janice Avenue
Melrose Park, IL 60160
Mr. Sherman McGrew

Calgon Carbon Corporation
P. O. Box 717
Pittsburgh, PA 15230-0717
Mr. Mark Weissert

Combustion Engineering
Andover Road, Box 372
Wellsville, NY 14895
Mr. Brian Cannon

CVM Corporation
402 Vandever Avenue
Wilmington, DE 19802
Ms. Roxanne Pietro

DCI International
1229 Country Club Road
Indianapolis, IN 46234
Mr. Bob Zopf

Durr Industries
40600 Plymouth Road
Plymouth, MI 48170-4297
Mr. Dinesh Bhushan

George Koch Sons, Inc.
10 S. Eleventh Avenue
Evansville, IN 47744
Mr. Don Miller

Global Environmental
P. O. Box 2945
Greenville, SC 29602
Mr. John Hatcher

Hirt Combustion Engineers
931 South Maple Avenue
Montebello, CA 90640
Mr. Chris Oakes

Hoyt Manufacturing Corp.
251-T Forge Road
Westport, MA 02790
Mr. Steven Rooney

Huntington Energy Systems
1081 Briston Road
Mountainside, NJ 07092
Mr. Ray Elsman

Industrial Technology Midwest
P. O. Box 626
Twin Lakes, WI 53181
Mr. William Nowack

M & W Industries
P. O. Box 952
Rural Hall, NC 27045
Mr. Jim Minor

Met-Pro Corporation
160 Cassell Road
Harleysville, PA 19438
Dr. Robert Kenson

Moco Fume Incinerators
First Oven Place
Romulus, MI 48174
Mr. Bill Diepenhorst

Nucon International, Inc
P. O. Box 29151
Columbus, OH 43229
Mr. Joseph Enneking

Ray-Solve, Inc.
100 West Main Street
Boundbrook, NJ 08805
Mr. Jules Varga

Reeco, Inc.
6416 Carmel Road
Charlotte, NC 28226
Mr. George Yundt

Salem Industries
245 South Mill Street
South Lyon, MI 48178
Mr. Lyman Thornton

Smith Engineering Company
P. O. Box 359
Broomhall, PA 19008-0359
Mr. Roy McIlwee

Stiles Machinery, Inc.
3965 44th Street Southeast
Grand Rapids, MI 49508
A. J. Stranges

Terr-Aqua Enviro Systems, Inc.
700 East Alosta, Unit 19
Glendora, CA 91740
Mr. Lynn Shugarman

Tigg Corporation
Box 11661
Pittsburgh, PA 15228
Mr. John Sherbondy

VARA International, Inc.
1201 19th Place
Vero Beach, FL 32960
Mr. Jerald Mestemaker

VIC
1620 Central Avenue, NE
Minneapolis, MN 55413
Mr. Tom Cannon

Weatherly, Inc.
1100 Spring St.,NW, Suite 800
Atlanta, GA 30309
Mr. Rick Daeschner

GOVERNMENT AGENCIES

Bay Area Air Quality Mgmnt. District
939 Ellis Street
San Francisco, CA 94109
Ms. Carol Lee
Mr. Dan Belik
Ms. Sandra Lopez

City of Dallas, Env. Health Div.
320 E. Jefferson, Rm. LL 13
Dallas, TX 75203
Mr. Gary Burlbaw

California Air Resources Board
P. O. Box 2815
Sacramento, CA 95812
Ms. Linda Nunn

FL Dept. of Environmental Regulation
2600 Blairstone Rd.-Twin Towers
Tallahassee, FL 32399-2400
Mr. James K. Pennington

GA Department of Natural Resources
205 Butler St., Suite 1162
Atlanta, GA 30334
Mr. Bill Mitchell

Illinois Environmental Protection Agency
Div. of Air Pollution Control
2200 Churchill Road
Springfield, IL 62794-9276
Mr. David A. Asselmeier
Mr. John Reed

Indiana Dept. of Environmental Mgmnt.
105 S. Meridan Street
Indianapolis, IN 46206-6015
Mr. David McIver
Ms. Ann Heighway
Mr. Andy Knott
Mr. Paul Dubenetzky

Maryland Air Management Division
2500 Broening Highway
Baltimore, MD 21224
Mr. Frank Courtright

MI Dept. of Natural Resources
P. O. Box 30028
Lansing, MI 48909
Mr. Bob Irvine
Mr. Dave Yanochko
Mr. David Ferrier
Mr. Ray Gray
Mr. Greg Edwards
Mr. Tom Julian
Ms. Linda Davis

NC Dept. of Env., Health, & Nat. Res.
8025 N. Point Blvd., Suite 100
Winston-Salem, NC 27106
Mr. Myron Whitely

NC Dept. of Environment, Health, & Natural Resources,
P. O. Box 950
Mooresville, NC 28115
Mr. Keith Overcash

NC Dept. of Environment, Health, & Natural Resources
P. O. Box 27687
Raleigh, NC 27611
Mr. Sammy Amerson
Mr. Bob Wooten

NC Dept. of Environment, Health, & Natural Resources
Division of Environmental Management-Air Quality
P. O. Box 29535
Raleigh, NC 27626
Mr. Alan Klimek
Ms. Joelle Bryan

NC Dept. of Environment, Health, & Natural Resources
Office of Waste Reduction
Pollution Prevention Program
3825 Barrett Drive
Raleigh, NC 27609
Mr. Gary Hunt
Ms. Sharon Johnson
Mr. David Williams

NC Office of the Small Business Ombudsman
3825 Barret Drive
Raleigh, NC 27609
Ms. Edythe McKinney
Ms. Finn Johnson

NJ Dept. of Environmental Protection
Bureau of Engineering and Regulatory Support
Trenton, NJ 08625
Ms. Beth Raddy

NJ Dept. of Environmental Protection
New Source Review
Trenton, NJ 08625
Mr. Mike Sabol

NY State Dept. of Env. Conservation
50 Wolfe Road
Albany, NY 12233-3254
Mr. Jim Coyle

Occupational Safety & Health Admin.
200 Constitution Avenue
Washington, D C. 20210
Mr. Joe Bodie
Mr. Sangi Kanth

Occupational Safety & Health Administration
Route 1, Box 259-C
Black Mountain, NC 28711
Mr. Don Jackson
Ohio EPA Southeast District
2195 Front Street
Logan, OH 43138
Ms. Susan Clay
Mr. Glen Greenwood

Ohio EPA Northeast Regional Office
2110 East Aurora Road
Twinsburg, OH 44087
Ms. Bridgett Burns

Ohio EPA, Div. of Pollution Control
1800 Water Mark Drive
Columbus, OH 43266-0149
Mr. Mike Riggelman

Ohio EPA Southwestern District
40 South Main Street
Dayton, OH 45402
Mr. Lawrence Harrell

PA Div. of Environmental Resources
Bureau of Air Quality
200 Pine Street
Williamsport, PA 17701
Mr. Richard Maxwell

PA Dept. of Environmental Resources
101 S. 2nd St., 114 Executive House
Harrisburg, PA 17120
Mr. Krishnan Ramamurthy

San Diego County APCD
9150 Chesapeake Drive
San Diego, CA 92123
Mr. Ben Hancock

South Coast Air Quality Mgmnt. District
9150 Flair Drive
El Monte, CA 91731
Ms. Jeanine Pandis
Mr. Roger Oja

Texas Air Control Board
6330 Hwy 290 East
Austin, TX 78723
Mr. Lane Hartsock

TN Div. of Air Pollution Control
701 Broadway, Customs House 4th Fl.
Nashville, TN 37247-3101
Mr David Carson

U. S. EPA Region V
230 South Dearborn Street
Chicago, IL 60604
Mr Steve Rosenthal

U. S. Environmental Protection Agency
Emissions Standards Division (MD-13)
Research Triangle Park, NC 27711
Mr. Jack Edwardson
Dr. Madeleine Strum

U. S. EPA Region III
841 Chestnut Building
Philadelphia, PA 19107
Mr. Ray Chalmers
Ms. Eileen Glen

U. S. Environmental Protection Agency
AEERL, MD-62B
Research Triangle Park, NC 27711
Mr. Charles Darvin
Mr. Robert McCrillis

U. S. Environmental Protection Agency
Region I
JFK Federal Building
One Congress Street
Boston, MA 02203
Ms. Janet Beloin

VA Dept. of Air Pollution Control
7701-03 Timberlake Road
Lynchburg, VA 24502
Mr. Terry Moore

VA State Air Pollution Control Board
P. O. Box 10089
Richmond, VA 23240
Mr. Robert Mann

WI Dept. of Natural Resources
Box 7921
Madison, WI 53707
Mr. Robert Park
Mr. Jon Heinrich

ASSOCIATIONS

American Furniture Manufacturers Assn.
P. O. Box HP-7
High Point, NC 27261
Mr. Larry Runyan

American Furniture Manufacturers Association
918 16th Street, NW, Suite 402
Washington, DC 20006
Mr. Joe Gerard

American Lung Association of NC
P. O. Box 27985
916 W. Morgan Street
Raleigh, NC 27611
Mr. Steve Wilcox

Architectural Woodwork Institute
13924 Braddock Road, Suite 100
Centreville, VA 22020
Ms. Judith Durham

Business & Instit. Furn. Mfg. Assn.
2680 Horizon Drive, S.E., A-1
Grand Rapids, MI 49546
Mr. Brad Miller

Canadian Paint & Coatings Assn.
9900 Cavendish Blvd., Suite 103
Quebec St.Laurent, Quebec,
CANADA H4MZV2
Ms Karen David

Canadian Kitchen Cabinet Assn
27 Goulburn Avenue
Ottawa, Ontario, CANADA K1N8C7
Mr Marco Durepos

Kitchen Cabinet Manufacturers Assn.
1899 Preston White Drive
Reston, VA 22091-4326
Mr. Richard Titus

Manufacturers of Emissions Controls Assn
1707 L Street, NW, Suite 570
Washington, DC 20036
Mr. Raymond Connor

National Paint & Coatings Assn.
1500 Rhode Island Avenue, NW
Washington, DC 20005
Mr. Bob Nelson
Mr. Allen Irish

New York ITAC
253 Broadway, Room 302
New York, NY 10007
Mr. Jon Zeltsman

Southern CA Finishing & Fab. Assn.
2552 Lee Avenue
S. El Monte, CA 91733
Mr. Ed Laird

Western Furnishings Mfg. Assn.
12631 East Imperial Hwy., Suite 106F
Sante Fe Springs, CA 90670
Mr. Jay Walton

OTHER

CDR Associates
100 Arapahoe Avenue
Boulder, CO 80302
Mr. John Lingelbach
Ms. Susan Wildau

ENSR Consulting & Engineering
35 Nagog Park
Acton, MA 01720
Mr. Kevin Jameson
Ms. Vicky Putsche

Environmental Defense Fund
128 East Hargett St.
Raleigh, NC 27601
Mr. Brian Morton

EnvironTech Associates, Inc.
485 Juniper Street
Warminster, PA 18974
Mr. Pete Obst

IRTA
2800 Olympic Blvd. #101
Santa MOnica, CA 90404
Ms. Katy Wolf

Journal of Waterborne Coatings
1 Technology Plaza
Norwalk, CT 06854
Mr. Stewart Ross

Miller, Johnson, Snell, & Cummiskey
800 Calder Plaza Building
Grand Rapids, Mi 49503
Ms. Sue Perry

Patton, Boggs, & Blow
1660 Lincoln, Suite 1975
Denver, CO 80264
Mr. J.G. Arbuckle

Rettew Associates, Inc.
3020 Columbia Avenue
Lancaster, PA 17603
Mr. Terry Black

Ron Joseph & Associates Inc.
12514 Scully Avenue
Saratoga, CA 95070
Mr. Ron Joseph

Sierra Club
394 E. Blaisedell Dr.
Claremont, CA 91711
Mr. Freeman Allen

Sizemore & Associates
1807 Pembroke Road
Suite 4
Greensboro, NC 27408
Mr. Trip Sizemore

Southern California Edison
Customer Technology Application Center
6090 N. Irwindale Avenue
Irwindale, CA 91702
Mr. Paul Delaney
Mr. John Hornung

The Furniture Mfg. and Management Center
NC State University
Campus Box 7906
Raleigh, NC 27695
Ms. Sholeh Azar

West Michigan Environmental Action Council
Grand Valley State University
1 Campus Drive
Allendale, MI 49401
Ms. Janet Vail

APPENDIX B. MODEL RULE FOR WOOD FURNITURE FINISHING AND CLEANING OPERATIONS

B.1 INTRODUCTION

This appendix presents a model rule for limiting volatile organic compound (VOC) emissions from wood furniture manufacturing facilities located in ozone nonattainment areas or in the ozone transport region. The model rule is a product of negotiations with the wood furniture industry, environmental group representatives, State representatives, and the U. S. Environmental Protection Agency. The model rule addresses various factors, including applicability, definitions, emission standards, work practice standards, compliance and monitoring, test methods, and recordkeeping and reporting requirements, that need to be addressed in writing an enforceable rule. The model rule is for illustrative purposes only; it does not preclude the use by States of alternative approaches, including more stringent ones, that are consistent with basic program requirements.

The model rule also provides information on how to incorporate an emission averaging program to meet the requirements of the model rule. The model rule does not address all situations or options for control; it only contains the presumptive requirements for a State to receive Federal approval of their rules developed for the wood furniture industry. The Economic Incentive Program Rules (EIP), promulgated on April 7, 1994 (59 FR 16690), provide more general information on using innovative strategies to meet Clean Air Act requirements, including reasonably available control technology (RACT). The EIP contains a range of options for States to use in incorporating economic incentives/innovative strategies into

their State implementation plans (SIP's). A State may use the EIP rule to develop an alternative trading method for meeting the wood furniture RACT requirements that are defined by this model rule.

This document provides guidance on emission averaging as applied specifically to the wood furniture RACT requirements. None of the provisions are intended to apply, a priori, to emission trading programs involving other source categories covered by SIP's or other Clean Air Act requirements.

Attachment 1 includes additional information pertaining to small businesses. Attachment 2 includes information related to the emission standards presented in Section B.4 and the monitoring requirements presented in B.6. Attachment 3 includes an example of a wood furniture manufacturing facility using an averaging approach to meet RACT requirements.

B.2 APPLICABILITY

(a) Provisions of this rule apply to:

(1) Each wood furniture manufacturing facility located in marginal, moderate, serious, or severe ozone nonattainment areas, or in the ozone transport region that has the potential to emit greater than or equal to 25 tons per year of volatile organic compounds (VOC); and

(2) Each wood furniture manufacturing facility located in an extreme ozone nonattainment area that has the potential to emit greater than or equal to 10 tons per year of volatile organic compounds.

B.3 DEFINITIONS AND NOMENCLATURE

(a) Provided below is a list of definitions for terms as they are used in this model rule. (State-adopted rules should include definitions for these terms, as well as any other terms in their rule whose definition may be ambiguous.)

Adhesive means any chemical substance that is applied for the purpose of bonding two surfaces together other than by mechanical means

Administrator means the Administrator of the United States Environmental Protection Agency or his or her authorized representative.

Affected source means a wood furniture manufacturing facility that meets the criteria listed in Section B.2(a).

Agency means the regulatory agency responsible for enforcement of the rule.

Alternative method means any method of sampling and analyzing for an air pollutant that is not a reference or equivalent method but that has been demonstrated to the Administrator's satisfaction to, in specific cases, produce results adequate for a determination of compliance.

As applied means the VOC and solids content of the finishing material that is actually used for coating the substrate. It includes the contribution of materials used for in-house dilution of the finishing material.

Basecoat means a coat of colored material, usually opaque, that is applied before graining inks, glazing coats, or other opaque finishing materials and is usually topcoated for protection.

Baseline conditions means the conditions that exist prior to an affected source implementing controls, such as a control system.

Capture device means a hood, enclosed room, floor sweep, or other means of collecting solvent emissions or other pollutants into a duct so that the pollutant can be directed to a pollution control device such as an incinerator or carbon adsorber.

Capture efficiency means the fraction of all organic vapors generated by a process that are directed to a control device.

Certified product data sheet means documentation furnished by a coating supplier or an outside laboratory that provides the VOC content, solids content, and density of a finishing material, strippable booth coating, or solvent, measured using the EPA Method 24, or an equivalent or alternative method (or formulation data if the coating meets the criteria specified in § B.7(a)). The purpose of the CPDS is to assist the affected source in

demonstrating compliance with the emission limitations presented in B.4. Therefore, the VOC content should represent the maximum VOC emission potential of the finishing material, strippable booth coating, or solvent.

Cleaning operations means operations in which organic solvent is used to remove coating materials from equipment used in wood furniture manufacturing operations.

Coating means a protective, decorative, or functional material applied in a thin layer to a surface. Such materials include, but are not limited to, paints, topcoats, varnishes, sealers, stains, washcoats, basecoats, adhesives, inks, and temporary protective coatings.

Coating solids (or solids) means the part of the coating that remains after the coating is dried or cured; solids content is determined using data from EPA Method 24.

Continuous coater means a finishing system that continuously applies finishing materials onto furniture parts moving along a conveyor system. Finishing materials that are not transferred to the part are recycled to the finishing material reservoir Several types of application methods can be used with a continuous coater including spraying, curtain coating, roll coating, dip coating, and flow coating.

Continuous compliance means that the affected source is meeting the emission limitations and other requirements of the rule at all times and is fulfilling all monitoring and recordkeeping provisions of the rule in order to demonstrate compliance.

Control device means any equipment that reduces the quantity of a pollutant that is emitted to the air. The device may destroy or secure the pollutant for subsequent recovery. Includes, but is not limited to, incinerators, carbon adsorbers, and condensers.

Control device efficiency means the ratio of the pollution released by a control device and the pollution introduced to the control device, expressed as a fraction

Control system means the combination of capture and control devices used to reduce emissions to the atmosphere.

Conventional air spray means a spray coating method in which the coating is atomized by mixing it with compressed air at an air pressure greater than 10 pounds per square inch (gauge) at the point of atomization. Airless and air assisted airless spray technologies are not conventional air spray because the coating is not atomized by mixing it with compressed air.

Day means a period of 24 consecutive hours beginning at midnight local time, or beginning at a time consistent with a facility's operating schedule.

Emission means the release or discharge, whether directly or indirectly, of VOC into the ambient air.

Equipment leak means emissions of volatile organic compounds from pumps, valves, flanges, or other equipment used to transfer or apply finishing materials or organic solvents.

Equivalent method means any method of sampling and analyzing for an air pollutant that has been demonstrated to the Administrator's satisfaction to have a consistent and quantitatively known relationship to the reference method under specific conditions.

Finishing application station means the part of a finishing operation where the finishing material is applied, e.g., a spray booth.

Finishing material means a coating other than an adhesive. For the wood furniture manufacturing industry, such materials include, but are not limited to, basecoats, stains, washcoats, sealers, and topcoats.

Finishing operation means those activities in which a finishing material is applied to a substrate and is subsequently air-dried, cured in an oven, or cured by radiation.

Incinerator means, for the purposes of this industry, an enclosed combustion device that thermally oxidizes volatile organic compounds to CO and CO_2. This term does not include devices that burn municipal or hazardous waste material.

Material safety data sheet (MSDS) means the documentation required by the Occupational Safety and Health Administration (OSHA) Hazard Communication Standard (29 CFR 1910) for a solvent, cleaning material, finishing material, or other material that identifies select reportable hazardous ingredients of the material, safety and health considerations, and handling procedures.

Nonpermanent final finish means a material such as a wax, polish, nonoxidizing oil, or similar substance that must be periodically reapplied to a surface over its lifetime to maintain or restore the reapplied material's intended effect.

Normally closed container means a container that is closed unless an operator is actively engaged in activities such as emptying or filling the container.

Operating parameter value means a minimum or maximum value established for a control device or process parameter that, if achieved by itself or in combination with one or more other operating parameter values, determines that an owner or operator has complied with an applicable emission limit.

Organic solvent means a liquid containing volatile organic compounds that is used for dissolving or dispersing constituents in a coating, adjusting the viscosity of a coating, cleaning, or washoff. When used in a coating, the organic solvent evaporates during drying and does not become a part of the dried film.

Overall control efficiency means the efficiency of a control system, calculated as the product of the capture and control device efficiencies, expressed as a percentage.

Ozone nonattainment area means an area that does not attain the National Ambient Air Quality Standard for ozone, pursuant to Section 107 of the Clean Air Act.

Permanent total enclosure means a permanently installed enclosure that completely surrounds a source of emissions such that all emissions are captured and contained for discharge through a control device. The enclosure must meet the criteria presented in § B.7(e)(1)(i) through (iv). For additional information, see The Measurement Solution: Using a Temporary

Total Enclosure for Capture Efficiency Testing (EPA-450/4-91-020). (This document is available from National Technical Information Services (NTIS), 5825 Port Royal Road, Springfield, VA, 22161. Telephone 1-800-553-NTIS.

Potential to emit means the maximum capacity of a stationary source to emit a pollutant under its physical and operational design. Any physical or operational limitation on the capacity of the source to emit a pollutant, including air pollution control equipment and restrictions on hours of operation or on the type of material combusted, stored, or processed, shall be treated as part of the design if the limitation or the effect it would have on emissions is federally enforceable.

Reference method means any method of sampling and analyzing for an air pollutant that is published in Appendix A of 40 CFR 60.

Responsible official has the meaning given to it in 40 CFR Part 70, State Operating Permit Programs (Title V permits).

Sealer means a finishing material used to seal the pores of a wood substrate before additional coats of finishing material are applied. Washcoats, which are used in some finishing systems to optimize aesthetics, are not sealers.

Solvent means a liquid used in a coating for dissolving or dispersing constituents in a coating, adjusting the viscosity of a coating, cleaning, or washoff. When used in a coating, it evaporates during drying and does not become a part of the dried film.

Stain means any color coat having a solids content by weight of no more than 8.0 percent that is applied in single or multiple coats directly to the substrate. Includes, but is not limited to, nongrain raising stains, equalizer stains, sap stains, body stains, no-wipe stains, penetrating stains, and toners.

Storage containers means vessels or tanks, including mix equipment, used to hold finishing or cleaning materials.

Strippable booth coating means a coating that: (1) is applied to a booth wall to provide a protective film to receive

overspray during finishing operations; (2) that is subsequently peeled off and disposed; and (3) by achieving (1) and (2), reduces or eliminates the need to use organic solvents to clean booth walls.

Substrate means the surface onto which coatings are applied (or into which coatings are impregnated).

Temporary total enclosure means an enclosure that meets the requirements of § B.7(e)(1)(i) through (iv) and is not permanent, but constructed only to measure the capture efficiency of pollutants emitted from a given source. In addition to meeting the requirements of § B.7(e)(1)(i) through (iv), any exhaust point from the enclosure shall be at least 4 equivalent duct or hood diameters from each natural draft opening. For additional information, see The Measurement Solution: Using a Temporary Total Enclosure for Capture Efficiency Testing (EPA-450/4-91-020).

Thinner means a volatile liquid that is used to dilute coatings (to reduce viscosity, color strength, and solids, or to modify drying conditions).

Topcoat means the last film-building finishing material applied in a finishing system. Non-permanent final finishes are not topcoats.

Touch-up and repair means the application of finishing materials to cover minor finishing imperfections.

Volatile organic compound (VOC) means any organic compound that participates in atmospheric photochemical reactions; that is, any organic compound other than those that the Administrator designates as having negligible photochemical reactivity. VOC is measured by a reference method, an equivalent method, an alternative method, or by procedures specified under any rule. A reference method, an equivalent method, or an alternative method, however, may also measure nonreactive organic compounds. In such cases, any owner or operator may exclude the nonreactive organic compounds when determining compliance with a standard. For a list of compounds that the Administrator has designated as having negligible photochemical reactivity, refer to 40 CFR 51.00.

Washcoat means a transparent special purpose coating having a solids content by weight of 12.0 percent or less. Washcoats are applied over initial stains to protect and control color and to stiffen the wood fibers in order to aid sanding.

Washoff operations means those operations in which organic solvent is used to remove coating from a substrate.

Waterborne coating means a coating that contains more than five percent water by weight in its volatile fraction.

Wood furniture facility means all of the pollutant-emitting activities that belong to the wood furniture industrial grouping, are located on one or more contiguous or adjacent properties, and are under the control of the same person (or persons under common control). The wood furniture industrial grouping includes the following standard industrial classification (SIC) codes: 2434, 2511, 2512, 2517, 2519, 2521, 2531, 2541, and 2599.

Wood furniture manufacturing operations means the finishing and cleaning operations conducted at a wood furniture facility.

Working day means a day, or any part of a day, in which a facility is engaged in manufacturing.

(b) The nomenclature used in this rule has the following meaning:

(1) A_k = the area of each natural draft opening (k) in a total enclosure, in square meters.

(2) C = the VOC content of a coating (c), in kilograms of VOC per kilogram of coating solids (kg VOC/kg solids), as applied. Also given in pounds of VOC per pound of coating solids (lb VOC/lb solids), as applied.

(3) C_{aj} = the concentration of VOC in gas stream (j) exiting the emission control device, in parts per million by volume.

(4) C_{bi} = the concentration of VOC in gas stream (i) entering the emission control device, in parts per million by volume.

(5) C_{di} = the concentration of VOC in gas stream (i) entering the emission control device from the affected emission point(s), in parts per million by volume.

(6) C_{fk} = the concentration of VOC in each uncontrolled gas stream (k) emitted directly to the atmosphere from the affected emission point(s), in parts per million by volume.

(7) E = the emission limit achieved by the affected emission point(s), in kg VOC/kg solids.

(8) F = the control device efficiency, expressed as a fraction.

(9) FV = the average inward face velocity across all natural draft openings in a total enclosure, in meters per hour.

(10) N = the capture efficiency, expressed as a fraction.

(11) Q_{aj} = the volumetric flow rate of gas stream (j) exiting the emission control device, in dry standard cubic meters per hour.

(12) Q_{bi} = the volumetric flow rate of gas stream (i) entering the emission control device, in dry standard cubic meters per hour.

(13) Q_{di} = the volumetric flow rate of gas stream (i) entering the emission control device from the affected emission point(s), in dry standard cubic meters per hour.

(14) Q_{fk} = the volumetric flow rate of each uncontrolled gas stream (k) emitted directly to the atmosphere from the affected emission point(s), in dry standard cubic meters per hour.

(15) $Q_{in\ i}$ = the volumetric flow rate of gas stream (i) entering the total enclosure through a forced makeup air duct, in standard cubic meters per hour (wet basis)

(16) $Q_{out\ j}$ = the volumetric flow rate of gas stream (j) exiting the total enclosure through an exhaust duct or hood, in standard cubic meters per hour (wet basis).

(17) R = the overall efficiency of the control system, expressed as a percentage.

B.4 EMISSION STANDARDS

(a) Each owner or operator of an affected source subject to this rule shall limit VOC emissions from finishing operations by

(1) Using topcoats with a VOC content no greater than 0.8 kg VOC/kg solids (0.8 lb VOC/lb solids) as applied; or

(2) Using a finishing system of sealers with a VOC content no greater than 1.9 kg VOC/kg solids (1.9 lb VOC/lb solids), as applied, and topcoats with a VOC content no greater than 1.8 kg VOC/kg solids (1.8 lb VOC/lb solids), as applied; or

(3) For affected sources using acid-cured alkyd amino vinyl sealers or acid-cured alkyd amino conversion varnish topcoats, using sealers and topcoats based on the following criteria:

(*i*) If the affected source is using acid-cured alkyd amino vinyl sealers and acid-cured alkyd amino conversion varnish topcoats, the sealer shall contain no more than 2.3 kg VOC/kg solids (2.3 lb VOC/lb solids), as applied, and the topcoat shall contain no more than 2.0 kg VOC/kg solids (2.0 lb VOC/lb solids), as applied; or

(*ii*) If the affected source is using a sealer other than an acid-cured alkyd amino vinyl sealer and acid-cured alkyd amino conversion varnish topcoats, the sealer shall contain no more than 1.9 kg VOC/kg solids (1.9 lb VOC/lb solids), as applied, and the topcoat shall contain no more than 2.0 kg VOC/kg solids (2.0 lb VOC/lb solids), as applied; or

(*iii*) if the affected source is using an acid-cured alkyd amino vinyl sealer and a topcoat other than an acid-cured alkyd amino conversion varnish topcoat, the sealer shall contain no more than 2.3 kg VOC/kg solids (2.3 lb VOC/lb solids), as applied, and the topcoat shall contain no more than 1.8 kg VOC/kg solids (1.8 lb VOC/lb solids), as applied; or

(4) Meeting the provisions established in B.10 for sources using an averaging approach and demonstrating that actual emissions from the affected source are less than or equal to the lower of the actual versus allowable emissions using one of the following inequalities:

$$0.9\ (0.8\ (TC_1 + TC_2 + \ldots)) \geq (ER_{TC1})\ (TC_1) + ER_{TC2}\ (TC_2) + \ldots) \quad (1)$$

$$0.9\ \{[1.8\ (TC_1 + TC_2 + \ldots)] + [1.9\ (SE_1 + SE_2 + \ldots)] +$$
$$[9.0\ (WC_1 + WC_2 + \ldots)] + [1.2\ (BC_1 + BC_2 + \ldots)] +$$
$$[0.791\ (ST_1 + ST_2 + \ldots)]\} \geq [ER_{TC1}\ (TC_1) + ER_{TC2}\ (TC_2) + \ldots] +$$

$$[ER_{SE1}(SE_1) + ER_{SE2}(SE_2) + \ldots] + (ER_{WC1}(WC_1) + ER_{WC2}(WC_2) + \ldots] +$$
$$[ER_{BC1}(BC_1) + ER_{BC2}(BC_2) + \ldots] + [ER_{ST1}(ST_1) + ER_{ST2}(ST_2) + \ldots]$$

where:

TC_i = kilograms of solids of topcoat "i" used;

SE_i = kilograms of solids of sealer "i" used;

WC_i = kilograms of solids of washcoat "i" used;

BC_i = kilograms of solids of basecoat "i" used;

ST_i = liters of stain "i" used;

ER_{TCi} = VOC content of topcoat "i" in kg VOC/kg solids, as applied;

ER_{SEi} = VOC content of sealer "i" in kg VOC/kg solids, as applied;

ER_{WCi} = VOC content of washcoat "i" in kg VOC/kg solids, as applied;

ER_{BCi} = VOC content of basecoat "i" in kg VOC/kg solids, as applied; and

ER_{STi} = VOC content of stain "i" in kg VOC/liter (kg/l), as applied.

In inequalities (1) and (2) the facility must use the actual VOC content of the finishing materials used before they were subject to RACT if the VOC content is less than the allowed VOC content. For example, if the facility was using topcoats with a VOC content of 1.7 kg VOC/kg solids (lb VOC/lb solids) before being subject to RACT, they need to use that value in inequality (2) rather than 1.8.

(5) Using a control system that will achieve an equivalent reduction in emissions as the requirements of paragraph (a)(1) or (2) of this section, as calculated using the compliance provisions in section B.6(a)(2) of this rule, as appropriate; or

(6) Using a combination of the methods presented in paragraphs (a)(1, '2), (3), (4), and (5).

(b) Each owner or operator of an affected source subject to this rule shall limit VOC emissions from cleaning operations when using a strippable booth coating. A strippable booth coating shall contain no more than 0.8 kg VOC/kg solids, as applied (0.8 lb VOC/lb solids).

B.5 WORK PRACTICE STANDARDS

(a) Work practice implementation plan.

(1) Each owner or operator of an affected source subject to this rule shall prepare and maintain a written work practice implementation plan that defines work practices for each wood furniture manufacturing operation and addresses each of the topics specified in paragraphs (b) through (j) of this section. The plan shall be developed no more than 60 days after the compliance date. The owner or operator of the affected source shall comply with each provision of the work practice implementation plan. The written work practice implementation plan shall be available for inspection by the Agency, upon request. If the Agency determines that the work practice implementation plan does not adequately address each of the topics specified in paragraphs (b) through (j) of this section, the Agency may require the affected source to modify the plan.

(b) Operator training course. Each owner or operator of an affected source shall train all new and existing personnel, including contract personnel, who are involved in finishing, cleaning, or washoff operations or implementation of the requirements of this rule. All new personnel, those hired after the effective date of the rule, shall be trained upon hiring. All existing personnel, those hired before the effective date of the rule, shall be trained within 6 months of the effective date of the rule. All personnel shall be given refresher training annually. The affected source shall maintain a copy of the training program with the work practice implementation plan. The training program shall include, at a minimum, the following:

(1) A list of all current personnel by name and job description that are required to be trained;

(2) An outline of the subjects to be covered in the initial and refresher training for each position, or group of personnel;

(3) Lesson plans for courses to be given at the initial and the annual refresher training that include, at a minimum, appropriate application techniques, appropriate cleaning and washoff procedures, appropriate equipment setup and adjustment to

minimize finishing material usage and overspray, and appropriate management of cleanup wastes; and

(4) A description of the methods to be used at the completion of initial or refresher training to demonstrate and document successful completion and a record of the date each employee is trained.

(c) Leak inspection and maintenance plan. Each owner or operator of an affected source shall prepare and maintain with the work practice implementation plan a written leak inspection and maintenance plan that specifies:

(1) A minimum visual inspection frequency of once per month for all equipment used to transfer or apply finishing materials or organic solvents;

(2) An inspection schedule;

(3) Methods for documenting the date and results of each inspection and any repairs that were made;

(4) The timeframe between identifying a leak and making the repair, which adheres to the following schedule:

(*i*) A first attempt at repair (e.g., tightening of packing glands) shall be made no later than 5 working days after the leak is detected; and

(*ii*) Final repairs shall be made within 15 working days, unless the leaking equipment is to be replaced by a new purchase, in which case repairs shall be completed within 3 months.

(d) Cleaning and washoff solvent accounting system. Each owner or operator of an affected source shall develop an organic solvent accounting form to record:

(1) The quantity and type of organic solvent used each month for washoff and cleaning;

(2) The number of pieces washed off, and the reason for the washoff; and

(3) The net quantity of spent organic solvent generated from each activity. The net quantity of spent solvent is equivalent to the total amount of organic solvent that is generated from the activity minus any organic solvent that is

reused onsite for operations other than cleaning or washoff and any organic solvent that was sent offsite for disposal.

(e) Spray booth cleaning. Each owner or operator of an affected source shall not use compounds containing more than 8.0 percent by weight of VOC for cleaning spray booth components other than conveyors, continuous coaters and their enclosures, and/or metal filters, unless the spray booth is being refurbished. If the spray booth is being refurbished, that is, the spray booth coating or other material used to cover the booth is being replaced, the affected source shall use no more than 1.0 gallon of organic solvent to prepare the booth prior to applying the booth coating.

(f) Storage requirements. Each owner or operator of an affected source shall use normally closed containers for storing finishing, cleaning, and washoff materials.

(g) Application equipment requirements. Each owner or operator of an affected source shall not use conventional air spray guns for applying finishing materials except under the following circumstances:

(1) To apply finishing materials that have a VOC content no greater than 1.0 kg VOC/kg solids (1.0 lb VOC/lb solids), as applied;

(2) For touch-up and repair under the following circumstances:

(*i*) The finishing materials are applied after completion of the finishing operation; or

(*ii*) The finishing materials are applied after the stain and before any other type of finishing material is applied, and the finishing materials are applied from a container that has a volume of no more than 2.0 gallons.

(3) If spray is automated, that is, the spray gun is aimed and triggered automatically, not manually;

(4) If emissions from the finishing application station are directed to a control device;

(5) The conventional air gun is used to apply finishing materials and the cumulative total usage of that finishing

material is no more than 5.0 percent of the total gallons of finishing material used during that semiannual reporting period; or

(6) The conventional air gun is used to apply stain on a part for which it is technically or economically infeasible to use any other spray application technology. The affected source shall demonstrate technical or economic infeasibility by submitting to the Agency a videotape, a technical report, or other documentation that supports the affected source's claim of technical or economic infeasibility. The following criteria shall be used, either independently or in combination, to support the affected source's claim of technical or economic infeasibility:

(*i*) The production speed is too high or the part shape is too complex for one operator to coat the part and the application station is not large enough to accommodate an additional operator; or

(*ii*) The excessively large vertical spray area of the part makes it difficult to avoid sagging or runs in the stain.

(h) Line cleaning. Each owner or operator of an affected source shall pump or drain all organic solvent used for line cleaning into a normally closed container.

(i) Gun cleaning. Each owner or operator of an affected source shall collect all organic solvent used to clean spray guns into a normally closed container.

(j) Washoff operations. Each owner or operator of an affected source shall control emissions from washoff operations by:

(1) Using normally closed tanks for washoff; and

(2) Minimizing dripping by tilting or rotating the part to drain as much organic solvent as possible.

B.6 COMPLIANCE PROCEDURES AND MONITORING REQUIREMENTS

(a) The owner or operator of an affected source subject to the emission standards in § B.4 of this rule shall demonstrate compliance with those provisions by using any of the following methods:

(1) To support that each sealer, topcoat, and strippable booth coating meets the requirements of § B.4(a)(1), (2), or (3) or B.4(b) of this rule, maintain certified product data sheets for each of these finishing materials. If solvent or other VOC is added to the finishing material before application, the affected source shall maintain documentation showing the VOC content of the finishing material as applied, in kg VOC/kg solids.

(2) To comply through the use of a control system as discussed in B.4(a)(5):

(*i*) Determine the overall control efficiency needed to demonstrate compliance using Equation 3;

$$R = [(C - E)/C](100) \quad (3)$$

(*ii*) Document that the value of C in Equation 3 is obtained from the VOC and solids content of the as-applied finishing material;

(*iii*) Calculate the overall efficiency of the control device, using the procedures in § B.7(d) or (e), and demonstrate that the value of R calculated by Equation 6 is equal to or greater than the value of R calculated by Equation 3.

(b) Initial compliance.

(1) Owners or operators of an affected source subject to the provisions of § B.4(a)(1), (2), or (3) or B.4(b) that are complying through the procedures established in § B.6(a)(1) shall submit an initial compliance status report, as required by B.9(b), stating that compliant sealers and/or topcoats and strippable booth coatings are being used by the affected source.

(2) Owners or operators of an affected source subject to the provisions of B.4(a)(1), (2), or (3) that are complying through the procedures established in B.6(a)(1) and are applying sealers and/or topcoats using continuous coaters shall demonstrate initial compliance by:

(*i*) Submitting an initial compliance status report stating that compliant sealers and/or topcoats, as determined by the VOC

content of the finishing material in the reservoir and the VOC content as calculated from records, are being used; or

(*ii*) Submitting an initial compliance status report stating that compliant sealers and/or topcoats, as determined by the VOC content of the finishing material in the reservoir, are being used and the viscosity of the finishing material in the reservoir is being monitored. The affected source shall also provide data that demonstrates the correlation between the viscosity of the finishing material and the VOC content of the finishing material in the reservoir.

(3) Owners or operators of an affected source using a control system (capture device/control device) to comply with the requirements of this rule, as allowed by §§ B.4(a)(5) and B.6(a)(2) shall demonstrate initial compliance by:

(*i*) Submitting a monitoring plan that identifies the operating parameter to be monitored for the capture device and discusses why the parameter is appropriate for demonstrating ongoing compliance;

(*ii*) Conducting an initial performance test using the procedures and test methods listed in § B.7(c) and (d) or (e);

(*iii*) Calculating the overall control efficiency (R) using Equation 6; and

(*iv*) Determining those operating conditions critical to determining compliance and establishing operating parameters that will ensure compliance with the standard.

(A) For compliance with a thermal incinerator, minimum combustion temperature shall be the operating parameter.

(B) For compliance with a catalytic incinerator equipped with a fixed catalyst bed, the minimum gas temperature both upstream and downstream of the catalyst bed shall be the operating parameter.

(C) For compliance with a catalytic incinerator equipped with a fluidized catalyst bed, the minimum gas temperature upstream of the catalyst bed and the pressure drop across the catalyst bed shall be the operating parameters.

(D) For compliance with a carbon adsorber, the operating parameters shall be either the total regeneration mass stream flow for each regeneration cycle and the carbon bed temperature after each regeneration, or the concentration level of organic compounds exiting the adsorber, unless the owner or operator requests and receives approval from the Administrator to establish other operating parameters.

(E) For compliance with a control device not listed in this section, the operating parameter shall be established using the procedures identified in section B.6(c)(3)(vi).

(v) Owners or operators complying with paragraph (b)(3) of this section shall calculate the site-specific operating parameter value as the arithmetic average of the maximum or minimum operating parameter values, as appropriate, that demonstrate compliance with the standards, during the three test runs required by § B.7(c)(1).

(4) Owners or operators of an affected source subject to the work practice standards in section B.5 shall submit an initial compliance status report, as required by B.9(b), stating that the work practice implementation plan has been developed and procedures have been established for implementing the provisions of the plan.

(c) Continuous compliance demonstrations.

(1) Owners or operators of an affected source subject to the provisions of § B.4 that are complying through the procedures established in § B.6(a)(1) shall demonstrate continuous compliance by using compliant materials, maintaining records that demonstrate the materials are compliant, and submitting a compliance certification with the semiannual report required by § B.9(c).

(i) The compliance certification shall state that compliant sealers and/or topcoats and strippable booth coatings have been used each day in the semiannual reporting period, or should otherwise identify the days of noncompliance and the reasons for noncompliance. An affected source is in violation of the standard whenever a noncompliant material, as determined by

records or by a sample of the finishing material, is used. Use of a noncompliant material is a separate violation for each day the noncompliant material is used.

(*ii*) The compliance certification shall be signed by a responsible official of the company that owns or operates the affected source.

(2) Owners or operators of an affected source subject to the provisions of B.4 that are complying through the procedures established in B.6(a)(1) and are applying sealers and/or topcoats using continuous coaters shall demonstrate continuous compliance by following the procedures in (*i*) or (*ii*) of this paragraph.

(*i*) Using compliant materials, as determined by the VOC content of the finishing material in the reservoir and the VOC content as calculated from records, and submitting a compliance certification with the semiannual report required by B.9(c).

(A) The compliance certification shall state that compliant sealers and/or topcoats have been used each day in the semiannual reporting period, or should otherwise identify the days of noncompliance and the reasons for noncompliance. An affected source is in violation of the standard whenever a noncompliant material, as determined by records or by a sample of the finishing material, is used. Use of a noncompliant material is a separate violation for each day the noncompliant material is used.

(B) The compliance certification shall be signed by a responsible official of the company that owns or operates the affected source.

(*ii*) Using compliant materials, as determined by the VOC content of the finishing material in the reservoir, maintaining a viscosity of the finishing material in the reservoir that is no less than the viscosity of the initial finishing material by monitoring the viscosity with a viscosity meter or by testing the viscosity of the initial finishing material and retesting the material in the reservoir each time solvent is added, maintaining records of solvent additions, and submitting a compliance certification with the semiannual report required by B.9(c).

(A) The compliance certification shall state that compliant sealers and/or topcoats, as determined by the VOC content of the finishing material in the reservoir, have been used each day in the semiannual reporting period. Additionally, the certification shall state that the viscosity of the finishing material in the reservoir has not been less than the viscosity of the initial finishing material, that is, the material that is initially mixed and placed in the reservoir, for any day in the semiannual reporting period.

(B) The compliance certification shall be signed by a responsible official of the company that owns or operates the affected source.

(C) An affected source is in violation of the standard when a sample of the as-applied finishing material exceeds the applicable limit established in B.4(a)(1), (2), or (3), as determined using EPA Method 24, or an alternative or equivalent method, or the viscosity of the finishing material in the reservoir is less than the viscosity of the initial finishing material.

(3) Owners or operators of an affected source subject to the provisions of B.4 that are complying through the use of a control system (capture/control device) shall demonstrate continuous compliance by installing, calibrating, maintaining, and operating the appropriate monitoring equipment according to manufacturers specifications.

(*i*) Where a capture/control device is used, a device to monitor the site-specific operating parameter established in accordance with B.6(b)(2)(i) is required.

(*ii*) Where an incinerator is used, a temperature monitoring device equipped with a continuous recorder is required.

(A) Where a thermal incinerator is used, a temperature monitoring device shall be installed in the firebox or in the ductwork immediately downstream of the firebox in a position before any substantial heat exchange occurs.

(B) Where a catalytic incinerator equipped with a fixed catalyst bed is used, temperature monitoring devices shall be

installed in the gas stream immediately before and after the catalyst bed.

(C) Where a catalytic incinerator equipped with a fluidized catalyst bed is used, a temperature monitoring device shall be installed in the gas stream immediately before the bed. In addition, a pressure monitoring device shall be installed to determine the pressure drop across the catalyst bed. The pressure drop shall be measured monthly at a constant flow rate.

(iii) Where a carbon adsorber is used:

(A) An integrating regeneration stream flow monitoring device having an accuracy of ± 10 percent, capable of recording the total regeneration stream mass flow for each regeneration cycle; and a carbon bed temperature monitoring device having an accuracy of ±1 percent of the temperature being monitored expressed in degrees Celsius or ±0.5 C, whichever is greater, capable of recording the carbon bed temperature after each regeneration and within 15 minutes of completing any cooling cycle;

(B) An organic monitoring device, equipped with a continuous recorder, to indicate the concentration level of organic compounds exiting the carbon adsorber; or

(C) Any other monitoring device that has been approved by the Administrator as allowed under B.6(b)(3)(iv)(D).

(iv) Owners or operators of an affected source shall not operate the capture or control device at a daily average value greater than or less than (as appropriate) the operating parameter value. The daily average value shall be calculated as the average of all values for a monitored parameter recorded during the operating day.

(v) Owners or operators of an affected source that are complying through the use of a catalytic incinerator equipped with a fluidized catalyst bed shall maintain a constant pressure drop, measured monthly, across the catalyst bed.

(vi) An owner or operator using a control device not listed in this section shall submit to the Administrator a description of the device, test data verifying the performance of the device

and appropriate operating parameter values that will be monitored to demonstrate continuous compliance with the standard. Compliance using this device is subject to the Administrator's approval.

(4) Owners or operators of an affected source subject to the work practice standards in § B.5 shall demonstrate continuous compliance by following the work practice implementation plan and submitting a compliance certification with the semiannual report required by § B.9(c).

(*i*) The compliance certification shall state that the work practice implementation plan is being followed, or should otherwise identify the periods of noncompliance with the work practice standards. Each failure to implement an obligation under the plan during any particular day is a separate violation.

(*ii*) The compliance certification shall be signed by a responsible official of the company that owns or operates the affected source.

B.7 PERFORMANCE TEST METHODS

(a) The EPA Method 24 (40 CFR 60) shall be used to determine the VOC content and the solids content by weight of the as supplied finishing materials. The owner or operator of the affected source may request approval from the Administrator to use an alternative or equivalent method for determining the VOC content of the finishing material. If it is demonstrated to the satisfaction of the Administrator that a finishing material does not release VOC reaction byproducts during the cure (that is, no VOC is produced by the reaction), for example, all VOC is solvent, then batch formulation information shall be accepted. In the event of any inconsistency between an EPA Method 24 test and a facility's formulation data, that is, if the EPA Method 24 value is higher, the EPA Method 24 test shall govern. Sampling procedures shall follow the guidelines presented in "Standard Procedures for Collection of Coating and Ink Samples for VOC Content Analysis by Reference Method 24 and Reference Method 24A," EPA-340/1-91-010.

(b) Owners or operators demonstrating compliance with the provisions of this rule via a control system shall determine the overall control efficiency of the control system (R) as the product of the capture and control device efficiencies, using the test methods cited in § B.7(c) and the procedures in § B.7 (d) or (e).

(c) Owners or operators using a control system shall demonstrate initial compliance using the procedures in paragraphs (c)(1) through (c)(6) of this section.

(1) The EPA Method 18, 25, or 25A (40 CFR 60) shall be used to determine the VOC concentration of gaseous air streams. The test shall consist of three separate runs, each lasting a minimum of 30 minutes.

(2) The EPA Method 1 or 1A (40 CFR 60) shall be used for sample and velocity traverses.

(3) The EPA Method 2, 2A, 2C, or 2D (40 CFR 60) shall be used to measure velocity and volumetric flow rates.

(4) The EPA Method 3 (40 CFR 60) shall be used to analyze the exhaust gases.

(5) The EPA Method 4 (40 CFR 60) shall be used to measure the moisture in the stack gas.

(6) The EPA Methods 2, 2A, 2C, 2D, 3, and 4 shall be performed as applicable, at least twice during each test period.

(d) Owners or operators using a control system to demonstrate compliance with this rule shall use the following procedures:

(1) Construct the overall VOC control system so that volumetric flow rates and VOC concentrations can be determined by the test methods specified in § B.7(c)(1) through (6);

(2) Measure the capture efficiency from the affected emission point(s) by capturing, venting, and measuring all VOC emissions from the affected emission point(s) To measure the capture efficiency of a capture device located in an area with nonaffected VOC emission point(s) the affected emission point(s) shall be isolated from all other VOC sources by one of the following methods:

(*i*) Build a temporary total enclosure (see § B.3) around the affected emission point(s);

(*ii*) Shut down all nonaffected VOC emission point(s) and continue to exhaust fugitive emissions from the affected emission point(s) through any building ventilation system and other room exhausts such as drying ovens. All exhaust air must be vented through stacks suitable for testing; or

(*iii*) Use another methodology approved by the Agency provided it complies with the EPA criteria for acceptance under Part 63, Appendix A, Method 301.

(3) Operate the control system with all affected emission point(s) connected and operating at maximum production rate;

(4) Determine the efficiency (F) of the control device using Equation 4;

$$F = \frac{\sum_{i=1}^{n} Q_{bi} C_{bi} - \sum_{j=1}^{P} Q_{aj} C_{aj}}{\sum_{i=1}^{n} Q_{bi} C_{bi}} \qquad (4)$$

(5) Determine the efficiency (N) of the capture system using Equation 5;

$$N = \frac{\sum_{i=1}^{n} Q_{di} C_{di}}{\sum_{i=1}^{n} Q_{di} C_{di} + \sum_{k=1}^{P} Q_{fk} C_{fk}} \qquad (5)$$

(6) Compliance is demonstrated if the value of (R) in Equation 6 is greater than or equal to the value of R calculated by Equation 3 in accordance with § B.6(a)(2)(i).

$$R = (F \times N)(100) \qquad (6)$$

(e) An alternative to the compliance method presented in § B.7(d) is the installation of a permanent total enclosure. A

permanent total enclosure presents prima facia evidence that all VOC emissions from the affected emission point(s) are directed to the control device. Each affected source that complies using a permanent total enclosure shall:

(1) Demonstrate that the total enclosure meets the following requirements:

(*i*) The total area of all natural draft openings shall not exceed 5 percent of the total surface area of the total enclosure's walls, floor, and ceiling;

(*ii*) All sources of emissions within the enclosure shall be a minimum of four equivalent diameters away from each natural draft opening;

(*iii*) Average inward face velocity (FV) across all natural draft openings shall be a minimum of 3,600 meters per hour (200 ft/min) as determined by the following procedures:

(A) All forced makeup air ducts and all exhaust ducts are constructed so that the volumetric flow rate in each can be accurately determined by the test methods and procedures specified in § B.7(c)(2) and (3) Volumetric flow rates shall be calculated without the adjustment normally made for moisture content; and

(B) Determine FV by the following equation:

$$FV = \frac{\sum_{j=1}^{n} Q_{out\ j} - \sum_{i=1}^{p} Q_{in\ i}}{\sum_{k=1}^{q} A_k} \qquad (7)$$

(*iv*) All access doors and windows whose areas are not included as natural draft openings and are not included in the calculation of FV shall be closed during routine operation of the process.

(2) Determine the control device efficiency using Equation 4, and the test methods and procedures specified in § B.7(c)(1) through (6)

(3) If the permanent enclosure is demonstrated to be total, the value of N in Equation 5 is equal to 1.

(4) For owners or operators using a control system to comply with the provisions of this rule, compliance is demonstrated if:

(*i*) The installation of a permanent total enclosure is demonstrated (N=1); and

(*ii*) The value of (R) calculated by Equation 6 in accordance with B.7(d) is greater than or equal to the value of R calculated by Equation 3 in accordance with § B.6(a)(2).

B.8 RECORDKEEPING REQUIREMENTS

(a) The owner or operator of an affected source subject to the emission limits in § B.4 of this rule shall maintain records of the following:

(1) A certified product data sheet for each finishing material and strippable booth coating subject to the emission limits in B.4;

(2) The VOC content, kg VOC/kg solids (lb VOC lb/solids), as applied, of each finishing material and strippable booth coating subject to the emission limits in B.4, and copies of data sheets documenting how the as applied values were determined.

(b) The owner or operator of an affected source following the compliance procedures of B.6(c)(2) shall maintain the records required by B.8(a) and records of the following:

(1) Solvent and finishing material additions to the continuous coater reservoir; and

(2) Viscosity measurements.

(c) The owner or operator of an affected source following the compliance method of § B.6(a)(2) shall maintain the following records:

(1) Copies of the calculations to support the equivalency of using a control system, as well as the data that are necessary to support the calculation of E in Equation 3 and the calculation of R in Equation 6;

(2) Records of the daily average value of each continuously monitored parameter for each operating day. If all recorded

values for a monitored parameter are within the range established during the initial performance test, the owner or operator may record that all values were within the range rather than calculating and recording an average for that day; and

(3) Records of the pressure drop across the catalyst bed for facilities complying with the emission limitations using a catalytic incinerator with a fluidized catalyst bed.

(d) The owner or operator of an affected source subject to the work practice standards in § B.5 of this rule shall maintain onsite the work practice implementation plan and all records associated with fulfilling the requirements of that plan, including, but not limited to:

(1) Records demonstrating that the operator training program is in place;

(2) Records maintained in accordance with the inspection and maintenance plan;

(3) Records associated with the cleaning solvent accounting system;

(4) Records associated with the limitation on the use of conventional air spray guns showing total finishing material usage and the percentage of finishing materials applied with conventional air spray guns for each semiannual reporting period;

(5) Records showing the VOC content of compounds used for cleaning booth components, except for solvent used to clean conveyors, continuous coaters and their enclosures, and/or metal filters; and

(6) Copies of logs and other documentation developed to demonstrate that the other provisions of the work practice implementation plan are followed.

(e) In addition to the records required by paragraph (a) of this section, the owner or operator of an affected source that complies via the provisions of § B.6(a)(1) or § B.5 shall maintain a copy of the compliance certifications submitted in accordance with § B.9(c) for each semiannual period following the compliance date.

(f) The owner or operator of an affected source shall maintain a copy of all other information submitted with the initial status report required by § B.9(b) and the semiannual reports required by § B.9(c).

(g) The owner or operator of an affected source shall maintain all records for a minimum of 5 years.

(h) Failure to maintain the records required by (a) through (g) of this section shall constitute a violation of the rule for each day records are not maintained.

B.9 REPORTING REQUIREMENTS

(a) The owner or operator of an affected source using a control system to fulfill the requirements of this rule are subject to the following reporting requirements:

(Note: Regulatory agencies may want to adopt the reporting requirements contained in § 63.7 through § 63.10 of the General Provisions to part 63 [MACT standards]. These requirements specify timeframes for reporting performance test results, monitoring parameter values, and excess emissions reports.)

(b) The owner or operator of an affected source subject to this rule shall submit an initial compliance report no later than 60 days after the compliance date. The report shall include the items required by § B.6(b) of this rule.

(c) The owner or operator of an affected source subject to this rule and demonstrating compliance in accordance with § B.6(a)(1) or (2) shall submit a semiannual report covering the previous 6 months of wood furniture manufacturing operations according to the following schedule:

(*i*) The first report shall be submitted 30 calendar days after the end of the first 6-month period following the compliance date.

(*ii*) Subsequent reports shall be submitted within 30 calendar days after the end of each 6-month period following the first report.

(*iii*) Each semiannual report shall include the information required by § B.6(c), a statement of whether the affected source was in compliance or noncompliance, and, if the affected source

was in noncompliance, the measures taken to bring the affected source into compliance.

B.10 SPECIAL PROVISIONS FOR SOURCES USING AN AVERAGING APPROACH

The owner or operator of an affected source complying with the emission limitations established in B.4 through the procedures established in B.4(a)(4) shall also meet the provisions established in (a) through (i) of this section. (Attachment 3 includes an example of a facility that is planning to use an averaging approach to meet the requirements of the model rule. The example addresses each of the provisions discussed below.)

(a) Program goals and rationale. The owner or operator of the affected source shall provide a summary of the reasons why the affected source would like to comply with the emission limitations through the procedures established in B.4(a)(4) and a summary of how averaging can be used to meet the emission limitations. The affected source shall also document that the additional environmental benefit requirement is being met through the use of the inequalities in B.4(a)(4). These inequalities ensure that the affected source is achieving an additional 10 percent reduction in emissions when compared to affected sources using a compliant coatings approach to meet the requirements of the rule.

(b) Program scope. The owner or operator of the affected source shall describe the types of finishing materials that will be included in the affected source's averaging program. Stains, basecoats, washcoats, sealers, and topcoats may all be used in the averaging program. The affected source may choose other finishing materials for its averaging program, provided the program complies with the State's case-by-case basis for VOC averaging in the SIP. Finishing materials that are applied using continuous coaters may only be used in an averaging program if the affected source can determine the amount of finishing material used each day.

(c) Program baseline. The baseline for each finishing material included in the averaging program shall be the lower of

the actual or allowable emission rate as of the effective date of the State's RACT rule. In no case shall the facility baseline emission rate be higher than what was presumed in the 1990 emissions inventory for the facility unless the State has accounted for the increase in emissions as growth.

(d) Quantification procedures. The owner or operator of the affected source shall specify methods and procedures for quantifying emissions. Quantification procedures for VOC content are included in B.7. The owner or operator shall specify methods to be used for determining the usage of each finishing material. The quantification methods used shall be accurate enough to ensure that the affected source's actual emissions are less than the allowable emissions, as calculated using Inequality 1 or 2 in B.4(a)(4), on a daily basis to a level of certainty comparable to that for traditional control strategies applicable to surface coating sources.

(e) Monitoring, recordkeeping, and reporting. The owner or operator of an affected source shall provide a summary of the monitoring, recordkeeping, and reporting procedures that will be used to demonstrate daily compliance with the inequalities presented in B.4(a)(4). The monitoring, recordkeeping, and reporting procedures shall be structured in such a way that inspectors and facility owners can determine an affected source's compliance status for any day. Furthermore, the procedures must include methods for determining required data when monitoring, recordkeeping, and reporting violations result in missing, inadequate, or erroneous monitoring and recordkeeping. These procedures must ensure that sources have sufficiently strong incentive to properly perform monitoring and recordkeeping.

(f) SIP creditability and audit/reconciliation procedures. [The State must specify values for rule compliance and program uncertainty factors based on program elements such as the quantification and enforcement procedures and on the predictive quality of the information used by the State to develop the projections of emission reductions. The State must include a justification for the values assigned to these factors. If a

direct determination of emissions is available, then rule compliance and uncertainty factors can be presumed to be 1.

The State must also specify the auditing methods that will be used to demonstrate successful operation of the averaging program.]

(g) Implementation schedule. The owner or operator of an affected source shall submit an averaging proposal for State and EPA approval any time after [State needs to insert the date that EPA approves this averaging framework. This must ensure that all sources are in compliance with the State's rule by the effective date. Submittal of the averaging proposal does not provide an exemption from the model rule. The source must submit the averaging proposal by a date that allows sufficient time for EPA approval.]

(h) Administrative procedures. [The State needs to provide this information, which should include the requirements for who may submit an averaging proposal, who the proposal should be submitted to, and when the proposal may be submitted. Administrative procedures must recognize that EPA must approve proposals before an averaging program may be used to meet the rule.]

(i) Enforcement mechanisms. [The State needs to incorporate provisions that provide adequate enforcement measures for noncompliance with any source requirements, including monitoring, recordkeeping, and reporting. Each program must include provisions ensuring that State/local and Federal statutory maximum penalties preserve the deterrent effect of programs that do not allow averaging. Enforcement provisions should preserve the criminal sanctions (for knowing violations) authorized in the Clean Air Act for violations of State Implementation Plan requirements.

Compliance with monitoring, recordkeeping, and reporting requirements is critical to the integrity and success of the averaging program. Therefore, these penalty provisions must include enforcement provisions that establish a regulatory

structure that clearly and effectively deters inadequate or improper monitoring, recordkeeping, and reporting.

The example permit located at (insert location of sample permit that includes averaging) demonstrates how these provisions will be applied by the (insert name of permitting authority).]

Attachment 1 to EPA's Model Rule for Wood Furniture Manufacturing Facilities

The model rule reflects, to the extent possible, concepts laid out in tentative agreements by the regulatory negotiation committee and the "Harrisburg Work Group," a small working group of committee members. Some of the items regarding small business which, by their nature, do not fit into draft model rule format are briefly described here:

A. Reporting and Recordkeeping Associated with Federally Enforceable VOC Limits which are Below the RACT Applicability Threshold

Facilities emitting 75 percent or less of the "RACT applicability threshold"[1] should maintain records of emissions based on purchases[2] adjusted by inventory and submit annual reports. Sources with annual emissions of 75 percent to 100 percent of the RACT threshold should keep records either based on purchases adjusted by inventory or based on usage, with quarterly reporting. A source whose emissions cross from below the 75 percent level to above should notify the permitting agency and submit quarterly reports for the remainder of that year and the next year. If such a source emits at the 75 percent or less level throughout that next year, it can return to annual reporting the third year.

B. Clarification Regarding New Source Review (NSR) for Major Sources

In response to a request to clarify issues dealing with New Source Review that may affect small businesses:

1. If an area source[3] or "synthetic minor" source[4] modifies its facility but plans to remain below the RACT applicability threshold, does it, as a result of facility modifications with a potential increase in VOC emissions, have to undergo NSR?

---

[1] The RACT applicability threshold for this model rule is 10 tons for wood furniture facility located in an extreme ozone nonattainment area, and 25 tons per year for a wood furniture facility located in a marginal, moderate, serious or severe ozone nonattainment area or the ozone transport region.

[2] VOC data on coatings must use EPA Method 24 as the basis.

[3] An area source is one whose emissions are not sufficient to make the facility a major source.

[4] A synthetic minor source is a source which has obtained a Federally enforceable permit limitation to limit its potential to emit such it is no longer a major source.

Under current regulations, the source would not have to undergo NSR if it requests and is given a Federally enforceable limit that ensures that it remains below the threshold limit for major sources and the threshold does not subsequently change. It may not be necessary to receive a new limit if the old federally enforceable limit (1) contains conditions that still apply and (2) ensures that the source remains a minor source even after the modification has occurred. For reference, see 40 CFR 52.21(r)(4) and 52.21 (b)(7) which pertain to the "Prevention of Significant Deterioration," and 40 CFR 51.165 (a)(5)(ii) and 51.165(a)(1)(xiv) which pertain to nonattainment NSR.

2. If an area source or synthetic minor source increases its actual or potential emissions above the applicability threshold and eliminates its Federally enforceable emission limit, but does not modify its plant, does it, as a result of its increase in VOC emissions, have to undergo NSR?

Under current "source obligation provisions" in the NSR rules removing a federal limitation is considered a modification. Therefore, if removing an existing limitation causes a source to have a potential to emit that is higher than the major source threshold for the locality, the source is subject to NSR. For reference, see 40 CFR 52.21(r)(4) and 52.21 (b)(7) which pertain to the Prevention of Significant Deterioration, and 40 CFR 51.165(a)(5)(ii) and 51.165(a)(1)(xiv) which pertain to nonattainment NSR.

C. General Permits

It was recommended that the CTG explain and encourage the use of general permits[5]. In addition, the CTG should recommend that small businesses, where appropriate, establish a Federally enforceable permit limitation such that their potential to emit is below the RACT applicability threshold.

D. Information Outreach for small business

It was recommended that an Information Outreach Program be developed to serve as a resource for small wood furniture manufacturers and enabling or guidance document be prepared that will set forth guidance on aspects of the CTG. It should also detail the process of obtaining a Federally enforceable permit limitation that restricts a facility's potential emissions to below the RACT applicability threshold. This is being worked on

---

[5] A general permit is defined under 40 CFR 70 as a permit that meets the requirements of Section 70.6(d). It is issued by the permitting authority to cover numerous similar sources. The permitting authority grants the conditions and terms of the general permit to sources which qualify for it.

by the North Carolina Small Business Ombudsman with the EPA's Federal Small Business Assistance Program.

E. Extension of Compliance Date for RACT

It was understood by the committee that the compliance date for facilities to comply with RACT would be May of 1995. The committee recommended that a source emitting less than 50 tons of VOC's annually be allowed an additional period of time to either (1) establish a federally enforceable emission limit or, (2) if it is above the RACT applicability threshold, to research technologies, train employees, and develop recordkeeping capabilities. This period of time recommended is up until November 1996.

Attachment 2 to EPA's Model Rule for Wood Furniture Manufacturing Facilities

A. The units of "kilograms VOC per kilogram coating solid (pounds VOC per pound coating solid)," which are the units of the emission limitations in Section B.4, will be unfamiliar to most. Two notes are provided to help relate these units to a basis which may be more familiar. The following two notes pertain to Sections B.4.(a)(1) and B.4.(a)(2) of the preliminary draft model rule:

1. Section B.4(a)(1) provides an avenue for compliance that requires the facility to use a topcoat with a VOC content of no greater than 0.8 pounds VOC per pound of coating solids. A 20 percent nitrocellulose lacquer (conventional) topcoat has a VOC content of approximately 4.0 pounds VOC per pound of solids. Therefore, a topcoat with a VOC content of 0.8 pound VOC per pound of coating solids represents approximately 80 percent reduction in VOC from a 20 weight percent solids nitrocellulose lacquer topcoat.

2. Section B.4(a)(2) provides an avenue for compliance that requires the facility to change both its topcoats and sealers. Use of sealers with a VOC content of no greater than 1.9 pounds VOC per pound coating solids represents approximately a 53 percent in VOC from a 20 percent nitrocellulose lacquer sealer, and use of a topcoat with a VOC content of no greater than 1.8 pounds VOC per pound solids represents approximately a 55 percent reduction in VOC emissions from a 20 weight percent solids nitrocellulose lacquer topcoat.

B. This model rule also allows some monitoring requirements for control devices that may not be appropriate for other source categories. These include monitoring requirements for catalytic incinerators equipped with a fluidized catalyst bed, which are presented in B.6(b)(3)(iv)(C), and for carbon adsorbers, which are presented in B.6(b)(3)(iv)(D). These monitoring requirements have been negotiated with the wood furniture industry, and the EPA feels that they are appropriate for this industry. However, these monitoring requirements should not be adopted by another source category without a complete evaluation as to whether they are appropriate and reasonable for that source category.

Example of Permit Conditions Related to Averaging for a Wood Furniture Manufacturing Facility

I. Introduction

On June 16, 1994, representatives of the Environmental Protection Agency visited a wood furniture manufacturing facility located in Pennsylvania. The facility is located in a nonattainment area and is subject to a source-specific RACT determination. The source-specific RACT determination allows the facility to meet the required emission limitations by averaging its emissions across wood furniture finishing lines on a production-weighted daily basis. The facility also intends to use averaging to meet the emission limitations in B.4 of this model rule.

The purpose of the visit was to examine the monitoring and recordkeeping practices currently being used at the facility. This example provides guidance for developing source-specific monitoring and recordkeeping requirements for other wood furniture manufacturing facilities. Each State must submit an actual permit that applies to a source located within a nonattainment area within its borders if the State wishes to use the two-step approach as described in the EIP to allow averaging. The following discussion addresses each of the provisions that were presented in section B.10 of the attached model rule as they relate to the example facility, including program goals and rationale, the program scope, the program baseline, quantification procedures, and monitoring, recordkeeping, and reporting procedures. Each of these provisions must be addressed by sources that wish to use an averaging approach to meet the emission limitations presented in B.4. In addition, the example addresses information that needs to be provided by the State in which the facility is located.

II. Permit Conditions for Averaging

A. Program Goals and Rationale

Plant description. The facility manufactures custom office furniture. The furniture is typically finished and then assembled. Parts are finished on one of two lines, a hanging line, where the finishes are spray applied, and a flat line that uses both curtain and roll coaters. Some pieces, such as conference room table tops, are finished using spray application technology in a booth. Both fully pigmented finishes and wood tone finishes are used.

Program goals. One of the goals of the averaging program is to allow the facility to use finishing materials that do not meet the emission limitations presented in B.4(a)(1) and (2). This facility wishes to have this flexibility so that it can continue to meet the demands of the marketplace. The plant will use finishing materials with lower VOC contents to offset the

emissions resulting from the use of noncompliant finishing materials on a weighted use basis.

The facility is currently using a number of different types of lower-VOC finishing materials, including waterborne and higher solids materials. Many of these materials have a VOC content lower than the emission limitations presented in B.4(a)(1) and (2). The facility also uses some waterborne basecoats. Where feasible, the facility continues to explore and use lower VOC finishing materials to produce the finishes they desire.

Because of the custom nature of their work, the facility also chooses to use finishing materials that do not meet the emission limitations presented in B.4. The desire to use noncompliant coatings is due partly to the need to match the color of previously purchased furniture.

The facility explored the use of abatement equipment. They found, however, that for their facility it is more cost effective to use averaging to offset the emissions of the higher VOC finishing materials. The facility would like to continue to offset the excess emissions from these higher VOC finishing materials by using materials that have a lower VOC content than the emission limitations in the model rule. The facility would also like to get credit for using waterborne basecoats. The model rule does not require the use of basecoats, stains, or washcoats with lower VOC contents. Averaging would allow the facility to get credit for using these types of finishing materials with a lower VOC content.

Averaging provides the flexibility the facility needs to meet their product demands, without violating the RACT emission limitations. The facility feels that this flexibility will also be needed to meet the requirements that will be established by the States in response to this model rule. The facility does not believe they will need to use averaging every day to meet the emission limitations. They would like the option of using compliant coatings some days and an averaging program other days

The facility's experience with averaging to meet the current State and Federal requirements has been positive. Averaging has encouraged them to be innovative in their efforts to develop and use lower-VOC finishing materials.

Additional environmental benefit. By using the inequalities presented in B.4(a)(4) of the model rule as the basis for the averaging program, the facility will meet the requirement for additional environmental benefit. This equation ensures that the facility will reduce emissions an additional 10 percent over facilities using a compliant coatings approach to meet the emission limitations.

B. Program Scope

This averaging program applies to this facility and may be used by this facility to comply with the model rule on a daily basis. The finishing materials used in the averaging program will vary from day to day for this facility.

C. Program Baseline

The baseline for this facility is the lower of the actual or allowable emissions that occurred before the application of their source-specific RACT requirements.

D. Quantification Procedures

There are two components required to quantify the VOC emissions at the facility; the amount of each finishing material used, including catalysts and thinners, and the VOC content of each finishing material used.

Finishing material usage is determined by measuring the amount of finishing material that the operator begins with and the amount of finishing material that is left after the operation is complete. The amount of finishing material the operator starts with may be measured using manufacturer supplied units, such as five gallon containers, volumetric measuring devices, such as a cup, or by taking a beginning height measurement in a mixing pot. After the finishing operation is complete, the operator measures the remaining material with a yardstick to the nearest 0.5 inch. The height measurements have been calibrated to determine the volume for every mixing container the company uses. A copy of the calibration tables is attached.

Each employee is given training on how to obtain an accurate measurement. For example, the specifications for the use of the yardstick include putting the yardstick on the bottom of the container, holding the yardstick against a side, and withdrawing the yardstick to read the height (similar to reading a dipstick in a car).

The VOC content of the finishing material is calculated using the as supplied VOC content and the contribution of thinner. Finishing materials are sampled and tested using EPA Method 24 to verify the VOC content calculated from formulation data.

The facility will use one of the following two inequalities to calculate actual and allowable emissions.

$$0.9\ (0.8\ (TC_1 + TC_2 + \ldots)) \geq (ER_{TC1})\ (TC_1) + (ER_{TC2})\ (TC_2) + \cdots \quad (1)$$

$$0.9\ \{[1.8\ (TC_1 + TC_2 + \ldots)] + [1.9\ (SE_1 + SE_2 + \ldots)] + [9.0\ (WC_1 + WC_2 + \ldots)] + [1.2\ (BC_1 + BC_2 + \ldots)] + [0.791\ (ST_1 + ST_2 + \ldots)]\} \geq [ER_{TC1}\ (TC_1) + ER_{TC2}\ (TC_2) + \ldots] + [ER_{SE1}\ (SE_1) + ER_{SE2}\ (SE_2) + \ldots] + [ER_{WC1}\ (WC_1) + ER_{WC2}\ (WC_2) + \ldots] + [ER_{BC1}\ (BC_1) + ER_{BC2}\ (BC_2) + \ldots] + [ER_{ST1}\ (ST_1) + ER_{ST2}\ (ST_2) + \ldots]$$

where:

TC_i = kilograms of solids of topcoat "i" used;
SE_i = kilograms of solids of sealer "i" used;
BC_i = kilograms of solids of basecoat "i" used;
WC_i = kilograms of solids of washcoat "i" used;
ST_i = liters of stain "i" used;
ER_{TCi} = VOC content of topcoat "i" in kg VOC/kg solids, as applied;
ER_{SEi} = VOC content of sealer "i" in kg VOC/kg solids, as applied;
ER_{BCi} = VOC content of basecoat "i" in kg VOC/kg solids, as applied;
ER_{WCi} = VOC content of washcoat "i" in kg VOC/kg solids, as applied; and
ER_{STi} = VOC content of stain "i" in kg VOC/l, as applied.

Inequality 1 would apply when the facility wished to comply with B.4(a)(1) by averaging topcoats with a VOC content of less than 0.8 kg VOC/kg solids with those that have a VOC content of more than 0.8 kg VOC/kg solids.

Inequality 2 would apply to other averaging scenarios. The facility could use this equation to average among their stains, sealers, and topcoats or among their sealers and topcoats only.

Because the facility's source-specific requirements are different than the requirements associated with this model rule, the facility was not able to provide an actual calculation using these averaging equations. However, the facility was able to provide information on finishing materials they use. Following is a summary of the coating characteristics and the EPA's suggestion as to how the coatings could be used in the averaging calculation.

Finishing Material	VOC (kg VOC/kg solids)	Usage (kg solids)	Usage (liters)
Sealer	2.0	123	380
Topcoat 1	0.9	258	380
Topcoat 2	1.9	123	380

For a facility using these finishing materials in these amounts, the allowable and actual emissions can be calculated using Inequality 2. Using this equation the facility's allowable and actual emissions can be calculated as follows:

$0.9[1.8(381) + 1.9(123)] = 828$ kg VOC = allowable emissions

$0.9(258) + 1.9(123) + 2.0(123) = 712$ kg VOC = actual emissions

This calculation shows that the facility is in compliance; the actual emissions are about 15 percent less than the allowable even though one of the finishing materials, topcoat 2, would not comply if the facility were limited to a compliant coatings approach.

E. Monitoring, Recordkeeping, and Reporting

The State would need to incorporate monitoring, recordkeeping, and reporting requirements consistent with the criteria in B.10(e) in the permit. The example facility is currently monitoring finishing material and solvent usage closely and keeping extensive records on their usage. Finishing material usage is recorded by the operator on a data sheet each time a finishing material is used. Any solvent or catalyst that is added to the finishing material is also recorded. The form used to record finishing material usage is checked and approved by the supervisor. A copy of the finishing material usage form is attached.

Data from the finishing material usage form are input into a spreadsheet to calculate the VOC content of the finishing material as applied. The VOC content of each finishing material, as applied, and the total usage for each finishing material is then input into another spreadsheet to calculate the total VOC emissions for the day. The spreadsheet also calculates the allowable emissions for the day so the facility can determine compliance for the day. Copies of these spreadsheets are also attached.

The facility was asked how they would determine compliance in the event of lost data. Although the facility has never encountered this problem, they said the data could be reconstructed using production records and/or finishing material inventory, presuming worse cast, that is, assuming values for the unknown variables that would yield the highest weighted emission rate average.

F. State Implementation Plan Creditability and Audit/ Reconciliation Procedures

This information would normally be provided by the State. The State must add language that requires the source to submit the data needed for the audit process. The source needs to

specify a schedule for this data submittal that allows the State to meet its specified audit frequency.

G. Implementation Schedule

This information would normally be provided by the State. This must ensure that all sources are in compliance with the State's rule by the effective date. Submittal of the averaging proposal does not provide an exemption from the model rule. The source must submit the averaging proposal by a date that allows sufficient time for EPA approval.

H. Administrative Procedures

This information would normally be provided by the State. This must specify how data is to be submitted to the State by the source and when such data is to be submitted.

I. Enforcement Mechanisms

Enforcement mechanisms consistent with the requirements of B.10(i) would need to be provided. This information would normally be provided by the State. States need to specify any special requirements that apply to the permitted source for enforcement and compliance purposes such as definitions of what constitutes violations of the various compliance provisions, including the applicable emission limitations, as well as the penalty structure for addressing violations.

TECHNICAL REPORT DATA

(Please read Instructions on reverse before completing)

1. REPORT NO.	2.	3. RECIPIENT'S ACCESSION NO.
EPA-453/D-95-002		

4. TITLE AND SUBTITLE	5. REPORT DATE
Control of Volatile Organic Compound Emissions from Wood furniture Manufacturing Operations--Draft	1994
	6. PERFORMING ORGANIZATION CODE
7. AUTHOR(S)	8. PERFORMING ORGANIZATION REPORT NO.
9. PERFORMING ORGANIZATION NAME AND ADDRESS U.S. Environmental Protection Agency Office of Air Quality Planning and Standards Emission Standards Division Research Triangle Park, NC 27711	10. PROGRAM ELEMENT NO.
	11. CONTRACT/GRANT NO.
12. SPONSORING AGENCY NAME AND ADDRESS Director Office of Air Quality Planning and Standards Office of Air and Radiation U.S. Environmental Protection Agency Research Triangle Park, NC 27711	13. TYPE OF REPORT AND PERIOD COVERED Draft
	14. SPONSORING AGENCY CODE EPA/200/04

15. SUPPLEMENTARY NOTES

EPA Work Assignment Manager: Paul Almodóvar, (919) 541-0283

16. ABSTRACT

This draft Control Techniques Guideline (CTG) provides the necessary guidance for development of regulations to limit emissions of volatile organic compounds (VOC's) from wood furniture finishing and cleaning operations. This guidance includes emission limits for specific wood furniture finishing steps and work practices to reduce waste and evaporation through pollution prevention methods; these represent reasonably available control technology for wood furniture finishing and cleaning operations. This document is intended to provide State and local air pollution authorities with an information base for proceeding with their own analyses of RACT to meet statutory requirements.

17. KEY WORDS AND DOCUMENT ANALYSIS

a. DESCRIPTORS	b. IDENTIFIERS/OPEN ENDED TERMS	c. COSATI Field/Group
Air Pollution, volatile organic compound(s), Wood furniture manufacturing Emission limits Control techniques guideline	Air Pollution control	

18. DISTRIBUTION STATEMENT	19. SECURITY CLASS *(Report)*	21. NO. OF PAGES
Release Unlimited	Unclassified	286
	20. SECURITY CLASS *(Page)*	22. PRICE
	Unclassified	